ACTIVITY ID: 06FSH03

USGS CMG FACS OPERATION LOG

Page 1 of ____

EQUIPMENT CODE	ID	START DAY	START HOUR	START MINUTE	START COMMENT	END DAY	END HOUR	END MINUTE	END COMMENT	DEPTH (METERS)
Chirp	06C01	9/25	21	34	4HZ, 25KHZ samp 50ms	9/25	21	56	chop dselect freq	18
C	06C02	9/25	21	56	"	"	22	15	"	"
C	06C03	9/25	22	15	"	"	22	17	c-select [illegible]	
C	06C04	9/25	22	17	"	"	22	20	f select [illegible]	
C	06C05	9/25	22	20	"	"	22	56	d-select [illegible] 24	
C	06C06	9/26	12	55	moved fish to bow 40ms	9/26	13	01	Vert noise in rec shipping channel	6m
C	06C07	9/26	13	02	4HZ ACS, 25KHZ samp 50ms save	"	13	09	- changed back to 50ms - noise in chan -	6m
C	06C08	9/26	13	09	"	"	14	34		6m
C	06C09	9/26	14	34	shot 10000 - pinchout?	"	15	53		6m
C	06C10	9/26	15	53		"	16	18		
C	06C11	9/26	16	18	shore strike line	"	17	45		10m
C	06C12	9/26	17	45	rough	"	19	08		
C	06C13	9/26	19	08	rough	"	20	32		
C	06C14	9/26	20	32	"	"	21	57		
C	06C15	9/26	21	57		"	22	38		10 m
B	06B01	9/27	15	35	500 ms shot, 50ms save 24KHZ samp	"	15	50	442v C-Boom	
B	06B02	9/27	15	50	"		16	21	Changed volt 553v 15:56-15:58	
B	06B03	9/27	16	21			16	49		
B	06B04	9/27	16	49			17	13	15m	
B	06B05	9/27	17	13			17	25		

ACTIVITY ID: 06FSH03

USGS CMG FACS OPERATION LOG

EQUIPMENT CODE	ID	START DAY	START HOUR	START MINUTE	START COMMENT	END DAY	END HOUR	END MINUTE	END COMMENT	DEPTH (METERS)
B	06B06	9/27	17	25	500ms shot 50ms same 24KHz samp	9/27	17	41	rough 2'-3'	3m
B	06B07	9/27	17	41	"	9/27	17	57		
B	06B08	9/27	17	57	"	"	18	13	"	
B	06B09	"	18	13	"	"	18	23		
B	06B10	"	18	23	"	"	18	39	"	
B	06B11	"	18	39	"	"	18	51		
B	06B12	"	18	51	"	"	19	09	"	
B	06B13	"	19	09	"	"	19	18		
B	06B14	"	19	18	"	"	19	34	"	
B	06B15	"	19	34	"	"	19	44		
B	06B16	"	19	44	"	"	20	00	"	
B	06B17	"	20	00	"	"	20	10		
B	06B18	"	20	10	"	"	20	20	"	
B	06B19	"	20	20	"		20	48		
B	06B20	"	20	48	"		21	06	"	
B	06B21	"	21	06	"		22	02	rough	

FILL OUT THE DIAGRAM TO SHOW ACQUISITION GEOMETRY. INCLUDE GPS-TO-SHOT DISTANCE, SLED-TO-SHOT DISTANCE. AND STREAMER-TO-SHOT DISTANCE.

OC FSH03

GPS antenna

boomer

streamer

chirp

sidescan

shot

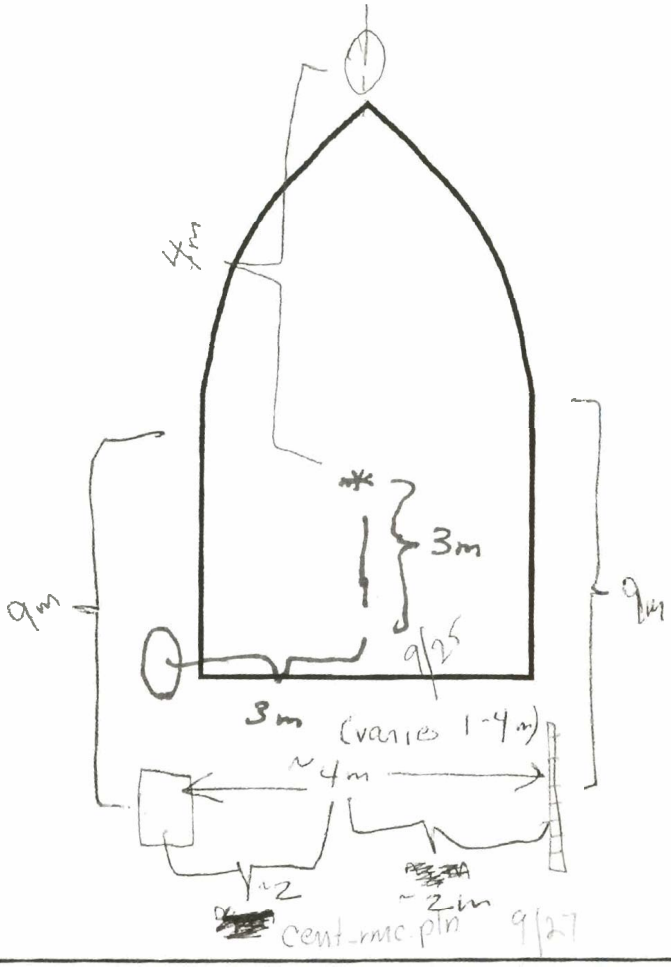

BOOMER EXAMPLE

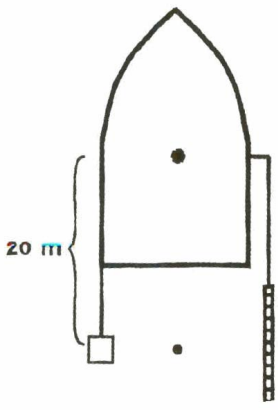
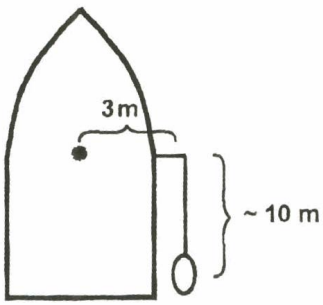
CHIRP EXAMPLE