Hillside Materials and Slopes of the San Francisco Bay Region

U.S. Geological Survey
Professional Paper 1357

COVER: Hillside materials affect development in the San Francisco Bay region. Top, Residential development advances into hillside terrain near Daly City (photograph by R.E. Wallace). Middle, Development in hillside terrain requires grading, trenching, and stable foundation materials. Bottom, Contrasting bedrock materials underlie hillslopes in the region (photograph by Julius Schlocker). Cover design by Nancy Hoskin.

Hillside Materials and Slopes of the San Francisco Bay Region, California

By STEPHEN D. ELLEN *and* CARL M. WENTWORTH

U.S. GEOLOGICAL SURVEY PROFESSIONAL PAPER 1357

A systematic description of hillslopes in the region—their steepness, what they are made of, and the physical properties of bedrock and soil that affect engineering use of the land

UNITED STATES GOVERNMENT PRINTING OFFICE, WASHINGTON : 1995

U.S. DEPARTMENT OF THE INTERIOR

BRUCE BABBITT, *Secretary*

U.S. GEOLOGICAL SURVEY

Gordon P. Eaton, *Director*

Any use of trade names and trademarks
in this publication is for descriptive
purposes only and does not constitute
endorsement by the U.S. Geological Survey

Library of Congress Cataloging-in-Publication Data

Ellen, Stephen D.
Hillside materials and slopes of the San Francisco Bay Region, California / by Stephen D. Ellen and Carl M. Wentworth.
p. cm. — (U.S. Geological Survey profesional paper : 1357)
Includes bibliographical references (p. –).
Supt. of Docs. no.: I19.16:1357
1. Slopses (Physical geography—California—San Francisco Bay Region. I. Wentworth, Carl M. II. Title. III. Series.
GB448.E45 1995
551.4′36—dc20 95-15030
CIP

For sale by U.S. Geological Survey, Information Services
Box 25286, Federal Center, Denver, CO 80225

CONTENTS

	Page
Abstract	1
Introduction	1
Uses of the report	2
Limitations of the report	2
Acknowledgments	2
Hillside materials	3
Weathering phases	3
Materials units	3
Unit descriptions	5
Purpose and use	5
Methods	5
Explanation of entries in unit descriptions	5
Map unit	6
Geologic unit, age, and location	6
Summary	6
Expression in aerial photographs	6
Composition	6
Proportions	7
Level of certainty	8
Physical properties	8
Rock hardness	9
Hillside materials—Continued	
Unit descriptions—Continued	
Explanation of entries in unit descriptions—Continued	
Physical properties—Continued	
Bedding	9
Fracture and parting	9
Permeability	10
Weathering	11
Surficial mantle texture	11
Expansivity	11
Stratigraphic thickness	13
Sources	13
Hillside slopes	13
Overview of materials and slopes in the region	15
Summary	15
References cited in text	15
Abbreviated unit descriptions	18
Detailed unit descriptions	68
References cited in "Detailed Unit Descriptions" and on plates	211

ILLUSTRATIONS

PLATE 1. Hillside materials of the northwestern part of the San Francisco Bay region, California.
2. Hillside materials of the northeastern part of the San Francisco Bay region, California.
3. Hillside materials of the southern part of the San Francisco Bay region, California.
4. Hillside slopes of the northwestern part of the San Francisco Bay region, California.
5. Hillside slopes of the northeastern part of the San Francisco Bay region, California.
6. Hillside slopes of the southern part of the San Francisco Bay region, California.
7. Free-swell sample locations in the San Francisco Bay region, California.

	Page
FIGURE 1. Hillside materials and their relation to topography and alluvial deposits	4
2. Terms used to describe proportions, and their defining percentages	7
3. Control data for reconnaissance estimates of expansivity	11
4. Permeability scale	12
5. Measures of slope of the ground surface	13
6. Relation of slope to excavation volume necessary to create a level cut-and-fill pad	14

TABLES

Page

TABLE 1. Grain size of clastic materials ---- 7
2. Rock-hardness scale ---- 8
3. Scales of bedding thickness, fracture spacing, and fragment size ---- 8
4. Relation of permeability to character of material ---- 11
5. Overview of materials and slopes in the region ---- 16

HILLSIDE MATERIALS AND SLOPES OF THE SAN FRANCISCO BAY REGION, CALIFORNIA

By Stephen D. Ellen and Carl M. Wentworth

ABSTRACT

Hillsides in the San Francisco Bay region differ in slope of the ground surface and in the kinds of materials beneath the ground surface. These differences affect engineering use of the land in several ways, including the volume and ease of grading needed to provide flat space for roads and foundations, the stability of that grading, the success of water wells and septic-tank systems, and the susceptibility to geologic hazards such as landsliding and earthquake shaking. This report systematically describes the materials and slopes of hillsides in nine counties (Alameda, Contra Costa, Marin, Napa, San Francisco, San Mateo, Santa Clara, Solano, and Sonoma) that constitute the bay region, so that land-use advantages or problems can be anticipated.

Hillside materials in the region range from soft, young stratified rock to older and harder stratified rock, volcanic rock, hard homogeneous rock, and chaotically mixed assemblages of hard and soft rock. The distribution of these materials is shown on 1:125,000-scale maps based on geologic mapping of the region. Approximately 360 units are described by bedrock composition, physical properties of bedrock (rock hardness, bed thickness, and spacing of fractures and partings), texture of surficial mantle (soil cover), expansivity, and permeability. Descriptions are based on thousands of systematic field observations, about one thousand free-swell tests for expansivity, examination of aerial photographs, and published reports. The units are described in detail and also in summary form, and they are organized and colored on the map according to dominant composition and physical properties, so that the general distribution of material properties can be readily discerned.

Slope of hillsides in the region is portrayed on 1:125,000-scale maps by the distribution of three slope intervals that reflect the level of constraint on development. These slope intervals are superimposed on materials units, so that the various combinations of slope and materials are displayed throughout the region.

Because of limitations of map scale and the heterogeneity of earth materials, the information is not sufficiently specific for design of foundations or grading. Its proper use is in more general considerations, such as general planning, preliminary evaluation of land, and review of proposals or reports. Using inference schemes outlined elsewhere, the data can be used for regional estimates of cut-slope stability, excavatability, and character of material as fill. In addition, the data may prove useful for predicting the extent and severity of hazards, such as landsliding and earthquake shaking. For such purposes, this report offers a consistent description of the physical character of hillside terrain pertinent to engineering use of land.

INTRODUCTION

Hillsides in the San Francisco Bay region differ in slope of the ground surface and in the kinds of materials beneath the ground surface, and these differences affect engineering use of the land. This report systematically describes hillside terrain in nine counties that make up the bay region, specifically Alameda, Contra Costa, Marin, Napa, San Francisco, San Mateo, Santa Clara, Solano, and Sonoma Counties. The report complements an earlier report that described flatlands of the region (Helley and others, 1979). Geologic processes, such as landsliding and faulting, are discussed here only as they modify the materials of hillside terrain; hazards posed by these processes are discussed in other reports (for example, Nilsen and others, 1979).

Two aspects of hillside terrain are described: (1) the materials that lie beneath the ground surface, and (2) the slope (or steepness) of the ground surface. Of these aspects, the materials are described more thoroughly. Distribution of materials is shown on 1:125,000-scale maps (pls. 1-6) that are based on geologic mapping of the region. Unit descriptions report the physical nature of materials that constitute each map unit in terms of composition and physical properties of bedrock, texture of surficial mantle (soil cover), and expansivity and permeability of bedrock and surficial mantle. Descriptions of map units were compiled from thousands of systematic field observations, stereoscopic inspection of high-altitude aerial photographs, published reports, discussions with geologists familiar with the map units, and about 1,000 free-swell tests of representative samples

for expansivity. Each unit is described in detail and also in summary form, and the units are organized and colored on the map according to dominant composition and physical properties, so that the distribution of dominant properties is clearly displayed.

Slope of the ground surface throughout the region is portrayed at a scale of 1:125,000 in plates 4 to 6, which show the distribution of gentle (0-15 percent), moderate (15-50 percent), and steep (greater than 50 percent) hillslopes. The slope maps are derived from more detailed slope maps of the region (U.S. Geological Survey, 1972). Slope intervals are superimposed on materials units, so that the various combinations of slope and materials are shown throughout the region.

USES OF THE REPORT

The maps and unit descriptions together constitute a guide to the physical nature of the ground from place to place in hillside terrain of the region. This guide can be used both directly and indirectly to anticipate problems and advantages of the ground at places of interest. Slope of the ground, for example, directly determines the volume of excavation needed to provide flat space for roads or foundations in sloping terrain; likewise, expansivity and permeability of materials relate directly to stability of foundations, success of water wells, and suitability of the ground for septic-tank systems. Other engineering characteristics of materials, such as ease of excavation, are not described directly in this report but can be inferred from the described properties of the rock mass (see section below entitled "Purpose and Use"). Basic data provided here may also be useful in predictive regional mapping of susceptibility to geologic hazards, such as earthquake shaking and landsliding.

Different elements of the report are intended for different uses. Plates 1 to 3 portray simply the materials units, using color and pattern to distinguish different kinds of materials; these plates are designed for positive identification of units at sites of interest and for map portrayal of material character. Plates 4 to 6 combine color portrayal of materials with patterns that designate slope; by combining slope with materials, these plates provide a useful overview of hillside terrain, but provide less complete identification of materials.

The two sets of unit descriptions similarly are suited to different uses. The abbreviated descriptions summarize composition and physical properties of bedrock using a tabular format that facilitates quick appraisal and comparison of units. The detailed descriptions provide more complete information, including expansivity and permeability of materials and texture of surficial mantle.

LIMITATIONS OF THE REPORT

The major limitation on accuracy of this information is the fragmentary nature of the evidence. The vast majority of materials are concealed beneath the ground surface and are available for inspection only locally. Thus, the descriptions provided by this report are based strongly on geologic inference from the few exposures available. Geologic mapping, which was used to extrapolate information from exposed to covered areas, is likewise limited by paucity of exposure and also by the geologic complexity of the region.

The major limitation on use of this information is heterogeneity of materials units, which results from the inherent complexity of earth materials in the region. Most units include several kinds of bedrock overlain by several surficial mantle materials, and so the descriptions generally cannot specify the particular bedrock or mantle materials present at a given site. Rather, the descriptions specify the several materials that constitute the unit, and one or more of these may underlie the site of interest. Because the information is not site specific, it is not sufficient for design of grading or foundations. Its proper use is in considerations requiring less specific information, such as general planning, preliminary evaluation of land, review of proposals or reports, or regional mapping of geologic hazards. For such purposes, the information offers a consistent description of the physical character of earth materials pertinent to engineering use of land.

ACKNOWLEDGMENTS

Compilation of this report has involved a number of people over a period of years. Wentworth conceived the method and supervised the work. Most materials units were described and grouped by Ellen, but some detailed descriptions were written by Wentworth and some by R.J. Greenwood. Linework for the materials maps was simplified and prepared by Wentworth, Greenwood, and W.R. Stewart from larger scale geologic maps prepared principally by M.C. Blake, Jr., E.E. Brabb, K.F. Fox, R.J. McLaughlin, J.D. Sims, and J.R. Wagner. Photointerpretive subdivision of the Franciscan assemblage

in Marin County and elsewhere was done mostly by Ellen and Wentworth. Free-swell tests for evaluation of expansivity were performed by Greenwood, Stewart, Robert Anderson, B.F. Atwater, Wanda Barbie, J.M. Coyle, V.A. Frizzell, Gloria Harris, M.B. Norman, and G.O. Reid on samples collected mostly by Ellen. Maps of slope were developed by Wentworth, with the aid of Reid, Trudy Edmonston, and L.K. Sidoric, from the 1:125,000-scale slope map of the region (U.S. Geological Survey, 1972). Final map preparation was done principally by N.L. Hoskin, with assistance from Ellen, Stewart, D.S. Aitken, M.K. Christensen, D.L. Knifong, Yvonne Leung, J.D. Mow, B.W. Rogers, and C.G. Utter; the maps were edited by J.S. Detterman. Preparation of the manuscript involved the efforts of Stewart, C.R. Fischer, B.A. Gessner, E.M. Lanza, E.P. Lopez-Cavender, M.P. Milan, and J.C. Vasquez; the text was edited by M.A. McCall and J.A. Troll. The authors are indebted to all whose patience and encouragement have facilitated the work.

HILLSIDE MATERIALS

The materials described here are the bedrock and overlying surficial mantle, or soil cover, that make up almost all hilly terrain in the bay region (fig. 1). Exceptions occur locally where hilly terrain is underlain by surficial deposits, such as alluvium and terrace deposits, that are too small to show at map scale or that remain unrecognized, but such deposits are most abundant in flatlands of the region (Helley and others, 1979).

WEATHERING PHASES

Very different earth materials can result from a single original bedrock material as a result of variations in degree of weathering. The weathering phases so produced, sketched in figure 1*B*, are described as follows:

Surficial mantle is the unconsolidated earth or soil cover formed by disintegration of bedrock and vegetation. It forms an irregular blanket as much as 10 feet or so thick between the ground surface and underlying intact bedrock.

Weathered bedrock is intact bedrock sufficiently weathered so that fractures, partings, and distinct bedding planes are weak and slightly open, weathering fractures have formed in clayey rock, hardness is commonly reduced from that of fresh bedrock, and some clay has been released from appropriate rock types. It forms a crude layer commonly a few tens of feet thick between the surficial mantle and fresh bedrock below.

Fresh bedrock is intact bedrock essentially unmodified by weathering. It extends downward to depth from a gradational contact with weathered bedrock. Most fractures and bedding planes are tight though not necessarily strong, clay is generally bound up in consolidated rock rather than free to soften or migrate upon wetting, and hardness has not been affected by weathering.

MATERIALS UNITS

A typical unit on the maps of hillside materials (pls. 1-3) consists of several parent bedrock materials, each with its weathering products. Such heterogeneity could be reduced in some units by additional mapping, but for most units contrasts in bedrock composition are too small to be shown at regional map scale.

Approximately 360 units are distinguished by color, pattern, and number label on plates 1 to 3. Most units are delineated by contacts taken from the geologic source maps (see pl. 1). These contacts have been modified only by simplification required for reduction to map scale, by use of surficial deposits contacts from Helley and others (1979) where possible, and locally along the Pacific coast to permit materials in seacliffs to be shown. Separate outcrop areas of widespread geologic units in many cases are distinguished as different materials units because of local differences in materials or proportions.

Some materials units are aggregates of geologic units because reduction from source-map scales has required small geologic units to be grouped. In San Mateo County, many materials units consist of several geologic units grouped by similarity of materials. Over most of the region, however, geologic units have been grouped only where required by map scale, as map simplicity has been sacrificed in order to retain the uniqueness of each unit.

New contacts have been added in parts of the map where recent work has permitted subdivision of particularly heterogeneous geologic units. Most new contacts have been drawn within geologic units characterized by strong contrasts in degree of shearing, particularly units of the Franciscan assemblage. These contacts have been obtained by mapping the form of hillside terrain using 1:80,000-scale stereo aerial photographs (Ellen and others, 1982).

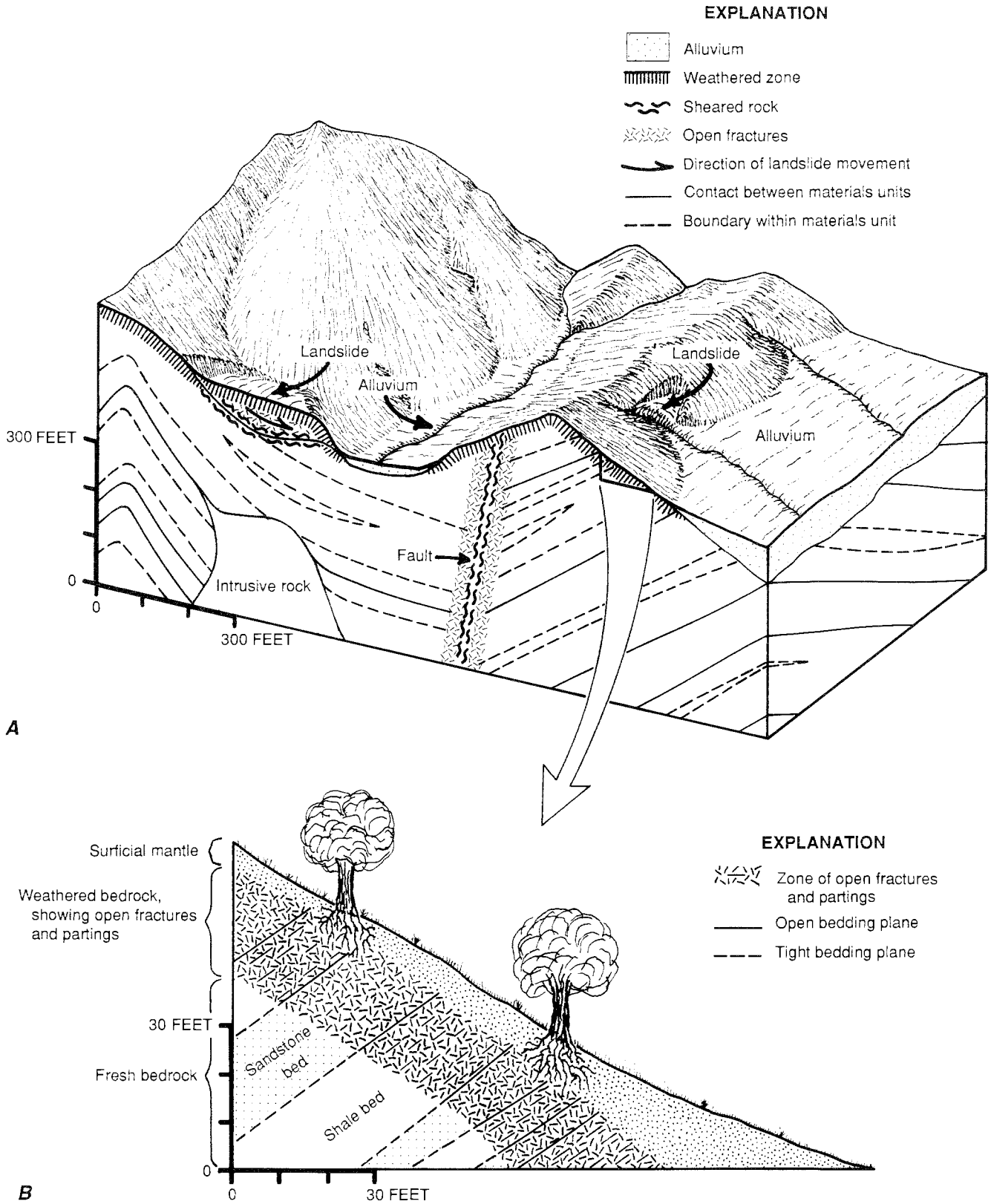

FIGURE 1.—Hillside materials and their relation to topography and alluvial deposits. *A*, Schematic block diagram showing both hillside terrain, with its underlying materials, and flatlands over alluvial deposits. *B*, Schematic cross section of a hillside, showing weathering phases.

Materials units in Marin County have been delineated largely by this technique.

In addition to units designated by color and pattern on plates 1 to 3, faults and large landslides constitute units in which material character is modified from that of undisturbed materials (fig. 1A). Landslides are shown only in parts of the region (see source map on pl. 1), and even in these areas many smaller landslides are not shown. Major mapped faults are shown throughout the area except where concealed by water or alluvium, but smaller or less significant faults undoubtedly affect rock character in many places where faults are not shown. Thus, the materials described in this report may have been modified in many places by unmapped faults and landslides.

UNIT DESCRIPTIONS

Each unit is described by both an abbreviated description and a detailed description. The abbreviated descriptions systematically summarize composition and physical properties of bedrock, using a tabular format that facilitates comparison of units. The detailed descriptions offer more complete information on bedrock composition and physical properties, and also describe texture of surficial mantle, expansivity and permeability of materials, and other aspects of units.

PURPOSE AND USE

The descriptions are intended to provide a reasonably complete and consistent description of those aspects of hillside materials that most influence engineering operations in land development. The physical properties and aspects of composition selected for description are those that significantly influence engineering character of hillside materials, particularly through expansivity, permeability, ease of excavation, suitability as fill, and cut-slope stability (Wentworth and others, 1985). Translation schemes developed by Wentworth and others and outlined in Tabor and others (1983, p. 47-64) permit systematic inference of these engineering characteristics, such as ease of excavation, from the described physical properties of the rock mass, such as fracture spacing and rock hardness. Of the engineering characteristics listed above, only expansivity and permeability are evaluated here; the others may be inferred from the detailed descriptions using methods like those outlined in Tabor and others (1983).

METHODS

Unit descriptions were compiled primarily from systematic field observation of composition and physical properties. Observations were largely along roads, where access is easy and materials may be exposed in cuts. Exposures of a given unit were located by discussion with geologists familiar with the unit, by reference to published reports, by use of aerial photographs, and by traveling roads crossing the unit. Stereoscopic examination of aerial photographs in the field improved estimates of proportions of components and led to recognition of poorly exposed materials. These local observations were then extrapolated to the majority of the landscape according to geologic mapping of the region. These methods were employed because the materials that underlie the region are almost entirely concealed beneath the ground surface.

Observations in the field and on aerial photographs were complemented by information obtained from the geologic literature and from interviews with geologists. Information from consulting firms was not incorporated except where reports were publicly available. Sources of information used for each unit are listed in the detailed descriptions.

Expansive behavior of materials was determined by free-swell tests on about one thousand representative samples collected during field observation, as described below. Free-swell values are given in the detailed descriptions; sample locations are shown on plate 7.

EXPLANATION OF ENTRIES IN UNIT DESCRIPTIONS

Each unit description consists of an ordered series of entries describing aspects of the unit. The abbreviated descriptions consist of entries for map unit; geologic unit, age, and location; composition of bedrock; and physical properties of bedrock (rock hardness, fracture spacing, bedding thickness). The detailed descriptions give more complete information on each of these aspects, and in addition describe expression of the unit in aerial photographs, bedding-plane parting, permeability, weathering, surficial mantle texture, expansivity, stratigraphic thickness, and sources of information. In the detailed descriptions, entries are listed only where information is available, and a few units lack some of these entries. Information needed to understand and interpret the descriptions is given below under appropriate headings.

MAP UNIT

Each map unit and its corresponding description is identified by a three-digit number. These numbers form a discontinuous sequence related to the groupings of units by which the maps of hillside materials are colored and patterned, as shown in the map explanation. Eight major groupings, representing fundamental differences in nature of the rock mass, are divided into about thirty subgroups on the basis of composition. Within most subgroups, units are arranged by approximate stratigraphic order; within subgroups of volcanic rocks, units are arranged by composition. The major groupings, as well as the use of map color to convey fundamental material properties, are further described in the section entitled "Overview of Materials and Slopes in the Region."

GEOLOGIC UNIT, AGE, AND LOCATION

This entry gives the geologic name and approximate age of the geologic unit or units that make up the materials unit, as well as the general location of the materials unit. Stratigraphic nomenclature used here generally follows that of the geologic source maps, which are identified on plate 1.

Approximate geologic age is shown for most units by symbols in parentheses following the geologic name: (Q) designates Quaternary; (QT) designates Quaternary and (or) Tertiary; (T) designates Tertiary; (TK) designates Tertiary and (or) Cretaceous; (K) designates Cretaceous; (KJ) designates Cretaceous and (or) Jurassic; (J) designates Jurassic; and a query, as in (J?), designates uncertainty in age assignment.

Place names used to describe location in this entry are shown in several places. General areas of occurrence are shown on the map of physiographic areas and cities (pl. 1) and on the index map showing location of counties (pl. 1-6). More specific place names are shown on the base maps of plates 1 to 7, and even more specific names are shown on U.S. Geological Survey 7.5-minute quadrangle maps. Place names on these different maps are not identical because the features are of different scales. In cases where more than one materials unit has been created from a single geologic unit, the location is generally preceded by the word "only," as in "Orinda Formation (T), only in the East Bay Hills."

SUMMARY

Each detailed description includes a brief summary of the unit, including field observations about engineering behavior that do not fit elsewhere in the description. The abbreviated descriptions provide a more systematic summary of bedrock composition and physical properties.

EXPRESSION IN AERIAL PHOTOGRAPHS

This entry in many detailed descriptions reports the appearance of the unit in small-scale (1:80,000) black-and-white aerial photographs viewed stereoscopically. This appearance is similar to the appearance from high-altitude aircraft. For many units we have used expression in aerial photographs to estimate proportions and bedding thickness.

Expression in aerial photographs is described in terms of both topographic form and photographic tone. Description of topographic form is based on rounding of crests and on prominence of ribbing, the pattern of roughly parallel sidehill ridges that characterizes many hillslopes in the region. Topography described as "hard" shows sharp crests and prominent ribbing. Topography described as "intermediate" shows somewhat rounded crests, irregular or poorly developed ribbing, or both. Topography described as "soft" shows rounded crests and lacks ribbing (see Ellen and others, 1982). We describe photographic tone as light or dark. Contrasts in tone commonly occur in bands or patches that reflect contrasting bedrock compositions.

COMPOSITION

This entry describes composition of each bedrock component of the materials unit and gives the proportion of the unit occupied by that component. Most terms describing composition are used in the standard sense as defined in the American Geological Institute Glossary of Geology (Bates and Jackson, 1987). Terms describing grain size of clastic materials are defined in table 1.

Some of the compositional terms used here require definition. "Grit" refers to sedimentary rock composed chiefly of granules (table 1), and "gritty" refers to rock that contains granules. Sandstone described as "clean" lacks matrix between sand grains; sandstone described as "dirty" or "high-matrix" contains appreciable matrix of unspecified character between sand grains; sandstone described as "clayey," "silty," or "tuffaceous" contains the specified type of matrix between sand grains. The terms "clay-clogged" and "clay-saturated" describe materials in which clay fills spaces between larger grains; the term "tapioca" describes material in which sand grains appear

TABLE 1.—*Grain size of clastic materials*

[Classification based on the Wentworth size scale (modified from Compton, 1962)]

Size class	Particle size	
	Millimeters	Inches
Boulders	>256	>10
Cobbles	64-256	2.5-10
Pebbles	2-64	0.08-2.5
Granules	2-4	0.08-0.16
Sand	- - -	0.002-0.08
Very coarse	1-2	- - -
Coarse	0.5-1	- - -
Medium	0.25-0.5	- - -
Fine	0.125-0.25	- - -
Very fine	0.0625-0.125	- - -
Silt	0.0039-0.0625	- - -
Clay	<0.0039	- - -

to be suspended in clay matrix. "Clayey rock" is used as a general term for compositions that include abundant clay, such as mudstone, claystone, and shale. Siliceous sedimentary rocks are generally described by the terms "subporcelaneous," "porcelaneous," "porcelanite," and "chert" (Bramlette, 1946, p. 12-16), except where such specific composition is not known, in which case the general term "siliceous" is used. Within volcanic materials, the term "flow rock" means rocks originating from lava flow (not ash flow). The term "tuff breccia" differs from "breccia" and "agglomerate" by designating more than 50 percent tuff matrix between blocks. We use the term "fine-grained" both as a sand-size term and to indicate silty and clayey materials when used with general terms such as "sedimentary rocks," "materials," or "matrix." We use the term "flysch" to mean simply a repetitively and relatively thinly interbedded sequence of sandstone and clayey rock.

The detailed descriptions contain more information about composition than the abbreviated descriptions. Further details of composition may be found in the references listed as sources in the detailed descriptions.

Proportions

The terms defined by percentages in figure 2 are used to describe the proportions of each unit occupied by its different bedrock compositions, as well as proportions of different surficial mantle textures and different degrees of permeability and expansivity. These terms are used throughout the unit descriptions strictly as defined in figure 2. Wherever the term "largely" is followed by two values, it applies to both values together rather than to the first value alone; hence "largely low to moderate" would be read "most is in the range low to moderate." If one term of a pair deserves emphasis, that term is underlined.

In the abbreviated unit descriptions, proportions are indicated by the form and capitalization of entries, as well as by the terms. Terms or pairs of terms in which the first letter is capitalized describe a proportion of the entire unit; if not capitalized, terms describe proportions within a major component

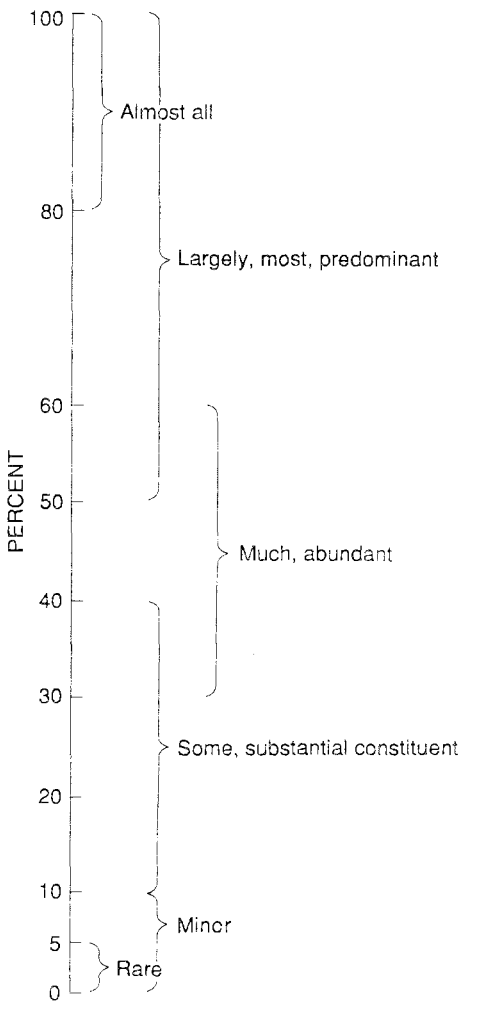

FIGURE 2.—Terms used to describe proportions of components in materials units, and their defining percentages.

of the unit. For example, the description of unit 350 reads:

Largely sandstone, some to much relatively clean
much clayey and dirty
minor to some cemented.
Minor to some mudstone, siltstone, and shale.

This unit is largely sandstone; minor to some of the unit is mudstone, siltstone, and shale. Of the sandstone, some to much is relatively clean, much is clayey and dirty, and minor to some is cemented.

For many units, proportions can be used to suggest the likelihood that a given component is present at a site of interest. In units where beds are thinner than several tens of feet, more than one component will probably be present at a site.

Level of Certainty

Some units are described more confidently than others, just as are some aspects of a given unit. We use several means to convey level of certainty. Information is presented without qualification where field observations and other information are consistent and reasonable. The term "probably" is used where information is based on reasonable inference but without solid observation. A query at the start of a statement expresses uncertainty about the entire statement that follows; a query in any other position expresses uncertainty only about the preceding term. Major uncertainty exists for all aspects of those units that were not visited or only briefly visited in the field, and these are denoted by statements like "Not seen in field."

PHYSICAL PROPERTIES

Rock hardness, bedding thickness, and spacing of fractures and parting surfaces are described for each composition of each map unit. These properties together describe the basic physical nature of the rock mass in each unit—hardness of pieces, sizes of pieces between planes of weakness, and thickness of the roughly tabular packets of each composition within the unit. Measuring scales and terms used to describe physical properties are defined in tables 2 and 3.

In the abbreviated descriptions, physical properties are reported in symbolic form. Symbolic abbreviations are defined in tables 2 and 3. The following conventions are used in the symbolic descriptions:

(1) In cases where a physical property is different in fresh and weathered rock, that property is expressed like a fraction, the description of weathered rock above that of fresh rock. For example, fracture spacing described as "m/w" would read "moderate in weathered rock, wide in fresh rock." When this form is not used, description of the physical property is the same in fresh and weathered bedrock.

(2) A hyphen between symbols indicates a range in properties; for example, fracture spacing of "c-m" would read "close to moderate." If a property ranges from an unspecified low value up to a given value, the word "to" is used in place of the hyphen; for example, fracture spacing described as "to m" would read "up to moderate."

(3) Parentheses indicate the dominant character of a material, in contrast to the extreme range dis-

TABLE 2.—*Rock-hardness scale*

Term	Symbol used in "Abbreviated Unit Descriptions"	Response of piece of rock to geologic hammer swung with moderate force
Hard	h	Hammer head bounces with solid sound
Quite firm	qf	Intermediate between firm and hard
Firm	f	Hammer head dents material with thud, pick point dents or slightly penetrates material
Firm approaching soft	fas	Intermediate between firm and soft
Soft	s	Pick point penetrates material

TABLE 3.—*Scales of bedding thickness, fracture spacing, and fragment size*

[Based on the experience of the authors in the California Coast Ranges. Symbols used in "Abbreviated Unit Descriptions"]

Bedding thickness

Thickness	Symbol	Inches	Centimeters
Very thin or laminated	vn	0-0.5	0-1
Thin	n	0.5-2	1-5
Medium	m	2-12	5-30
Thick	k	12-36	30-90
Very thick	vk	[1]>36	[1]>90
Absent	a	- - -	- - -

Fracture spacing and fragment size

Spacing of fracture or parting	Fragment size	Symbol	Inches	Centimeters
Very close	Very small	vc	0-0.5	0-1
Close	Small	c	0.5-2	1-5
Moderate	Medium	m	2-12	5-30
Wide	Large	w	12-36	30-90
Very wide	Very large	vw	[1]>36	[1]>90
Absent	---	a	- - -	- - -

[1]Maximum dimension generally specified.

played. Thus, hardness described as "(f)h" would read "mostly firm, ranging to hard." Likewise, fracture spacing described as "c(m-w)8ft" would read "most is moderate to wide, but spacing ranges from close to 8 feet."

(4) A comma separates an entry into two parts in cases where a material displays two properties that are roughly equally abundant. For example, bedding thickness described as "n, (k)" would read "thin in about half of the unit, largely thick in about half of the unit." Note that the comma is used in a different sense for description of hardness in rock types having hard or firm blocks in softer matrix, as described below in the section "Rock Hardness."

(5) A plus sign indicates "more than." For example, bedding thickness described as "(6-30ft)100ft+" would read "most is 6 to 30 feet, but thickness ranges to more than 100 feet."

(6) Uncertainty is expressed by query, as described above.

Rock Hardness

Rock hardness (called hardness in the descriptions) describes the response of pieces of bedrock to the geologic hammer swung with moderate force (table 2); for some closely fractured materials, hardness of the rock mass is also described. Hardness in large part determines excavatability and fill character of bedrock materials. Hardness also reflects abundance of free clay in clayey bedrock compositions, and as a result affects cut-slope stability, permeability, and expansivity of bedrock. Most rock softens with weathering, but some porous rock case hardens at surfaces exposed to air.

The symbolic description of rock hardness in the abbreviated descriptions is complex in cases where a single composition consists of matrix surrounding harder blocks, as in conglomerate, pillow lava, volcanic breccia and tuff breccia, highly sheared rock, and spheroidally weathered rock. Symbolic description of such materials is in the form "s, f clasts m," which reads "soft matrix including firm clasts of medium size." The term "blocks" is used instead of "clasts" in description of breccia, tuff breccia, sheared rock, and spheroidal weathering.

Bedding

Most bedrock of the region consists of interlayered, more or less tabular masses of different compositions. We describe thickness of beds using terms that indicate ranges of thickness (table 3). Bed thickness and the nature of interbedding are described somewhat differently in the abbreviated and detailed descriptions. In the abbreviated descriptions, entries under bedding thickness describe simply thickness of layers of each composition within the unit, not thickness of bedding within a composition. For example, the entry for the shale portion of a sandstone-shale unit would report the thickness of shale between sandstone, say 5 to 10 ft, rather than thin bedding within the shale. Similarly, the bedding thickness entry following flysch describes thickness of intervals of flysch rather than thickness of beds within flysch. In this manner, bedding thickness reported in the abbreviated descriptions conveys a general sense of the arrangement of compositions within a unit.

The detailed descriptions in addition report other aspects of bedding that affect behavior of materials, such as bedding within a composition and character of bedding contacts. Entries describe primarily the thickness of beds and their distinct or indistinct nature. Bedding is called "distinct" if beds display a strong contrast in composition and sharp contacts between materials; "indistinct" bedding lacks compositional contrast or has vague or gradational contacts. Some entries also describe the form of beds, their continuity along strike, and details of bedding-plane character. In nonsedimentary materials, entries under bedding describe thickness of layers of material.

Fracture and Parting

Fracture and parting are planes of weakness in bedrock; together they determine the size of naturally occurring pieces of bedrock. Parting surfaces lie parallel to one another and to compositional layering; fractures cross compositional layering. In the abbreviated descriptions, entries under fracture spacing report spacing of either fractures or parting surfaces, whichever is more closely spaced. In the detailed descriptions, fracture and parting are described separately. We describe spacing of fractures and parting surfaces using terms that indicate ranges of spacing (table 3). Moderate spacing includes a range (2-12 in.) that unfortunately spans the boundary that determines whether hard blocks are considered oversize for purposes of fill compaction (Wentworth and others, 1985).

Fractures in many bedrock materials, particularly those containing clay, are more closely spaced in weathered rock than in fresh rock, the result of

additional fractures opened by weathering. The term "original fracture" indicates the set of fresh-rock fractures upon which "weathering fracture" is superimposed. Bedrock that "scales," "flakes," or "spalls" has very closely spaced weathering fractures roughly parallel to exposed surfaces. Fracture spacing in large part determines excavatability of bedrock and affects fill character and fracture permeability.

Parting describes the presence and spacing of planes of weakness parallel to bedding or, in nonsedimentary materials, parallel to flow banding or foliation. Parting is most common at distinct bedding planes and within shale; it is accentuated by weathering, and many compositions where weathered show parting that is absent or incipient in fresh rock. Presence of parting affects excavatability, cut-slope stability, and fill character of materials. Parting also contributes to fracture permeability in shallow rock, and in some materials this effect is pronounced (see unit 539).

PERMEABILITY

In this report, permeability means the capacity of earth materials to transmit water. Water wells in hillside terrain require permeable bedrock for adequate yields; septic-tank systems require permeable near-surface materials for proper sewage disposal. Permeability can be accurately measured and described by the precise measuring scales shown in figure 3, but in this report it is crudely estimated using the four broad categories shown near the bottom of figure 3. Criteria used for estimating permeability are given in table 4.

Water in the ground moves through spaces, or pores, of two types, those between grains in the rock or soil (intergranular pores) and those along fractures in the rock mass (fracture pores). Intergranular permeability is moderate or high in surficial mantle or sedimentary rock that has large open spaces between grains. Fracture permeability is significant at those places where fractures are abundant, open, and not clogged with clay or silt. Intergranular permeability typically persists to depth (at least several hundred feet beneath the ground surface). In contrast, fracture permeability typically is most significant in shallow rock (within a few tens of feet of the ground surface) where weathering has opened fractures. Fracture permeability is generally very low at depth, where pressure keeps fractures closed; exceptions occur in volcanic flow rock and shallow intrusive rock, in which original cooling fractures may remain open to depth, and along faults, where tectonic disruption has opened fractures. In shallow rock, clay released by weathering may restrict both intergranular and fracture permeability by clogging pores.

We report permeability of each map unit in the detailed descriptions using several statements. The statement on intergranular permeability of bedrock applies to bedrock material both where shallow and at depth, unless otherwise noted. Fracture permeability is generally reported only where it significantly increases permeability of bedrock. For example, if a unit is reported to have much low and much very low intergranular permeability, then an additional report of much low fracture permeability in shallow rock must refer to the component having very low intergranular permeability. Thus, the reader could expect low total permeability in almost all shallow bedrock of the unit. If the term "permeability" is used without the qualifiers "intergranular" or "fracture," read "total permeability." If no distinction is made between shallow bedrock and bedrock at depth, the statement applies to bedrock at all depths.

A final statement describes permeability of surficial mantle. This estimate assumes that mantle is saturated, so that cracks are closed and permeability is entirely intergranular. The permeability reported is that of the least permeable (most clayey) mantle material beneath a point on the ground in the unit. One result of this convention is that high-permeability mantle materials are generally not reported although they are common on hillsides throughout the region.

WEATHERING

Effects of weathering on physical properties are reported in both the abbreviated and detailed descriptions, but the detailed descriptions include a separate statement on weathering for many units. Entries primarily describe depth of weathering, which is commonly reflected in a contrast between gray (fresh) and buff (weathered) colors, but also note significant aspects of weathered rock in the unit.

SURFICIAL MANTLE TEXTURE

This entry in the detailed descriptions primarily describes the clayey or granular texture of surficial mantle. We call mantle "clayey" if it contains more than about 25 percent clay-size particles. This proportion of clay is sufficient to effectively fill pores between larger grains, thereby causing typical clayey behavior. We call mantle "granular" if it contains

less than about 25 percent clay, the remainder being silt, sand, and gravel.

Surficial mantle in a map unit commonly consists of several distinct materials; these materials may either overlie one another or cover different parts of the map unit. If one mantle material overlies another, we report only the texture of the most clayey layer present, which is commonly subsoil. Thus, mantle texture is called clayey wherever some part of the mantle thickness is clayey, even if most of the mantle thickness is sand, a convention similar to that used in reporting mantle permeability. Areal

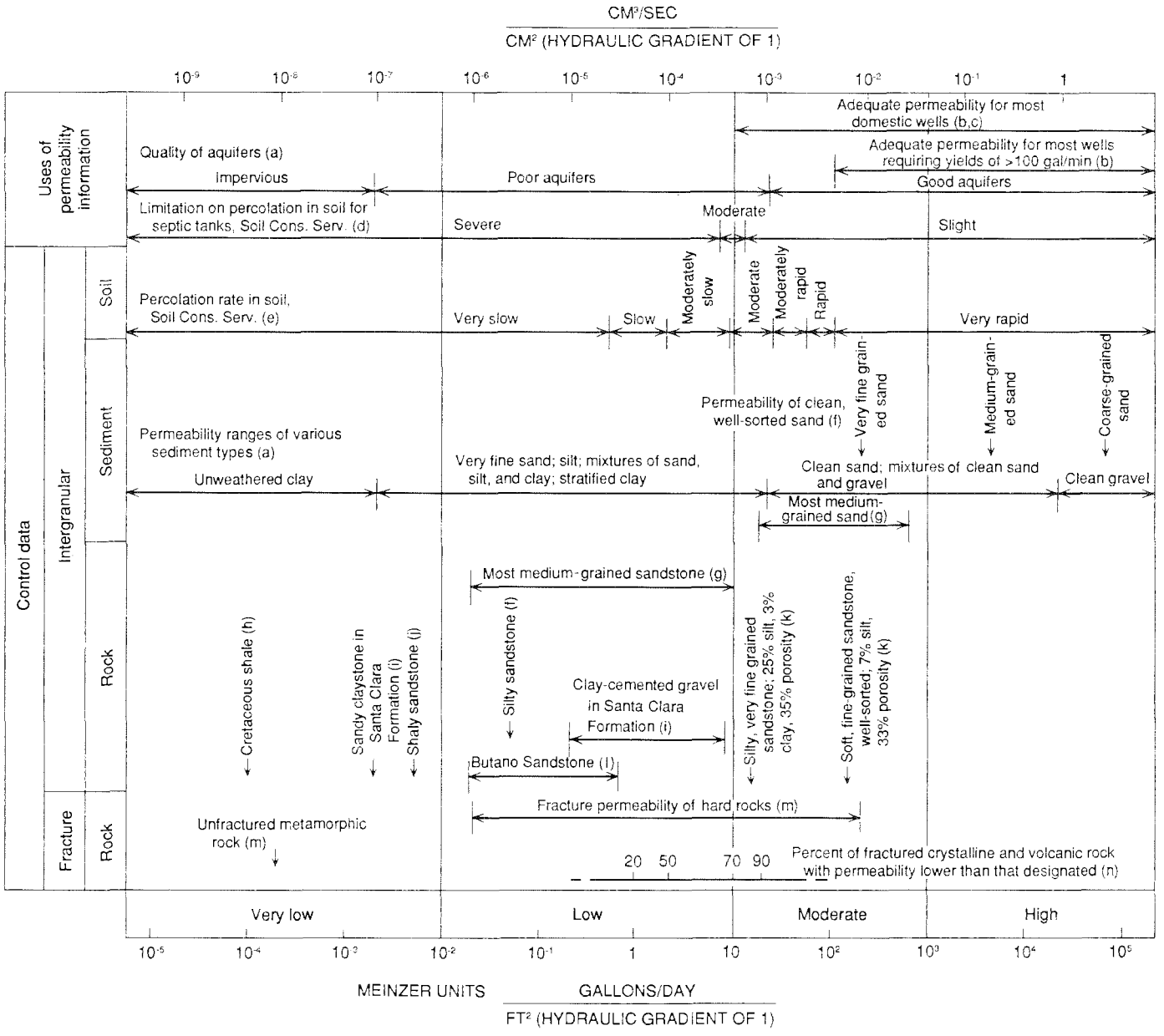

FIGURE 3.—Permeability scale. Measuring scales of permeability (in Meinzer units and metric units) extend horizontally across figure; permeability classes used in unit descriptions (very low, low, moderate, high), labeled near bottom of figure, divide scale into four broad intervals. Body of chart shows both the control data on which our estimates of permeability are based and uses of permeability information, such as quality of material as an aquifer. Letters in parentheses refer to sources of data: (a) Todd, 1959, p. 53; (b) Wenzel, 1942, p. 11-12; (c) Johnson, 1964; (d) U.S. Soil Conservation Service, 1968, p. a25; (e) Wagner and Nelson, 1961, p. 93; (f) Davis and DeWiest, 1966, p. 164; (g) Davis and DeWiest, 1966, p. 351; (h) Davis and DeWiest, 1966, p. 349; (i) Tolman, 1934, p. 39; (j) Davis and DeWiest, 1966, p. 348; (k) Stearns, 1927, p. 168; (l) Cummings and others, 1962, p. 184; (m) Davis and DeWiest, 1966, p. 319-320; (n) L.C. Dutcher, written commun., 1972.

TABLE 4.—*Relation of permeability to character of material*

Permeability	Character of material
Intergranular permeability:	
Very low	In clayey rock, hard rock, saturated severely expansive clayey surficial mantle, and probably in saturated, significantly expansive clayey mantle.
Low	In firm sandstone without abundant clay matrix or crystalline cement but without visible[1] porosity, and in unexpansive clayey surficial mantle.
Moderate	In bedrock or surficial mantle that is granular and has visible[1] porosity estimated to be equivalent to that of loose very fine sand.
High	In bedrock or surficial mantle that is granular and has obvious[1] porosity estimated to be equivalent to that of loose, medium or coarser sand.
Fracture permeability:	
Very low	In deeply buried[2] rock and saturated, expansive, soft to firm clayey rock.
Low	In most shallow[3] fractured rock (wide or closer fracture spacing).
Moderate	Possible in shallow[3] rock with very closely to moderately spaced fractures except where free clay is abundant (soft to firm clayey rock).
High	Possible where fractures have been opened in landslides and in hard rock at or near faults.

[1]Visible porosity, intergranular pores evident under 10× hand lens. Obvious porosity, intergranular pores clearly evident to naked eye.
[2]Deeply buried (or at depth), depths of at least several hundred feet beneath the ground surface.
[3]Shallow, depths less than a few tens of feet beneath the ground surface.

abundance of clayey and granular mantle is expressed by the proportions in the entry, such as "largely granular, some clayey."

Descriptions of surficial mantle texture are based on inference from bedrock character, combined in most cases with field observations related to free-swell sampling. See entries under "Expansivity" in the detailed descriptions for information on particular sampled materials. Information on the upper 5 ft of surficial mantle is also available in publications of the Soil Conservation Service (for example, U.S. Soil Conservation Service, 1968).

EXPANSIVITY

Expansive materials are those capable of shrink and swell with changes in water content; clay minerals are the principal expansive component. Materials called expansive in this report can expand with force sufficient to damage light loads, such as roads, frame houses, or concrete slabs.

We have estimated expansivity by testing representative samples for free swell (Krynine and Judd, 1957). Free-swell values have been correlated with loaded swell of the Uniform Building Code's Expansion Index Test (International Conference of Building Officials, 1973, 1976) using selected control samples, as shown in figure 4. Materials called "severely expansive" have free swell greater than 80 percent; they are surely capable of damaging light loads. Materials called "significantly expansive" have free swell between 45 percent and 80 percent; these may be capable of producing damage. Significantly and severely expansive materials are jointly called "expansive" in cases where degree of expansivity is uncertain. Materials called "unexpansive" have free swell less than 45 percent; these do not swell sufficiently to be of concern. Many significantly expansive materials may not be capable of damage under typical conditions. A conservative appraisal would consider both significantly and severely expansive

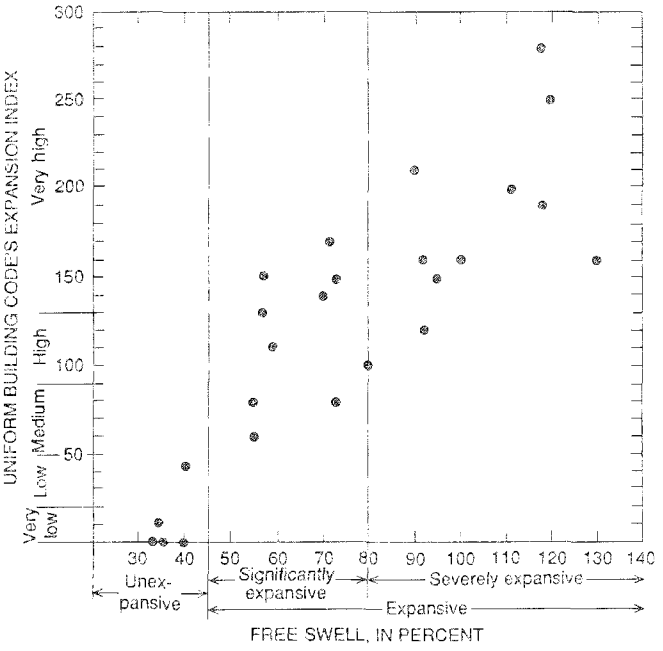

FIGURE 4.—Control data for reconnaissance estimates of expansivity. Expansion index of the Uniform Building Code (International Conference of Building Officials, 1973), measuring swell under confining load of 144 lb/ft^2, is plotted against free-swell values for a suite of samples that cover the range of free-swell values measured in the bay region. The range of free-swell values is divided into three categories: unexpansive, corresponding to very low to low expansion index; significantly expansive, corresponding to variably medium to very high expansion index; and severely expansive, corresponding to high to very high expansion index. Although the Uniform Building Code requires special design for all materials with expansion index above 20, engineers in the bay region have found few problems with materials having an expansion index below 50 (D.E. Clark, Cooper-Clark and Associates, oral commun., 1976). For this reason, materials with free swell corresponding to a low expansion index are included in the unexpansive category. Cooper-Clark and Associates performed the loaded swell tests on bulk samples that had been oven dried at about 100°C, using sample rings 2.38 in. in diameter rather than the 4.01 in. specified for the expansion index test. The smaller ring diameter should have little or no effect on the results; drying may have reduced expansivity slightly.

materials capable of damage and hence worthy of caution, but most damage from expansivity can be expected from severely expansive materials.

Entries under expansivity in the detailed descriptions report proportions of expansive materials in both bedrock and mantle of each unit. In some units, the expansive material is identified in parentheses; if not, the reader may assume that clayey materials are the expansive components. Bedrock is expansive generally only where weathered. Entries include the free-swell test data from which we have estimated degree of expansivity; tested materials are located by sample number on plate 7. For many samples we describe field evidence for expansivity, particularly degree of cracking.

The free-swell test has exaggerated the expansivity of some materials. If additional tests have confirmed exaggeration, we designate the free-swell value as exaggerated, as in "free swell 80 percent (exaggerated)." If exaggeration is suggested by texture of the material but has not been confirmed by testing, we query the designation, as in "free swell 80 percent (exaggerated?)."

Units of the Franciscan assemblage are described differently from other units in that free-swell samples are grouped according to bedrock composition and character rather than strictly by map unit sampled. For example, samples of clayey sheared rock from various map units are reported together in the description for unit 801.

STRATIGRAPHIC THICKNESS

Entries under stratigraphic thickness in the detailed descriptions give stratigraphic thicknesses reported in the literature for many units.

SOURCES

In the detailed descriptions, we list the references used in compiling the description and the number of stations at which field observations were made. The references listed are not comprehensive; with few exceptions, they are those that were readily available at the time of compilation (1974) and that contain useful information on composition and physical properties. The number of stations is intended to convey a sense of the thoroughness of field study, but this measure is crude because some stations revealed much more than others. Appearance in aerial photographs, an important source of information for many units, is not listed; its contribution can be judged from the thoroughness of the entry under "Expression in Aerial Photographs" and from other discussion within the description.

HILLSIDE SLOPES

Slope of the ground surface (fig. 5) strongly affects ease and cost of land development. Most development in hillside terrain requires flat space for roads, parking lots, and buildings. Except for flat hilltops and sidehill benches, this flat space must be created by grading.

Plates 4 to 6 show the region and its materials units subdivided into three slope intervals chosen to reflect the constraint of slope on land use. Gentle slopes (0-15 percent) present little or no constraint to road alignment or other land uses and require

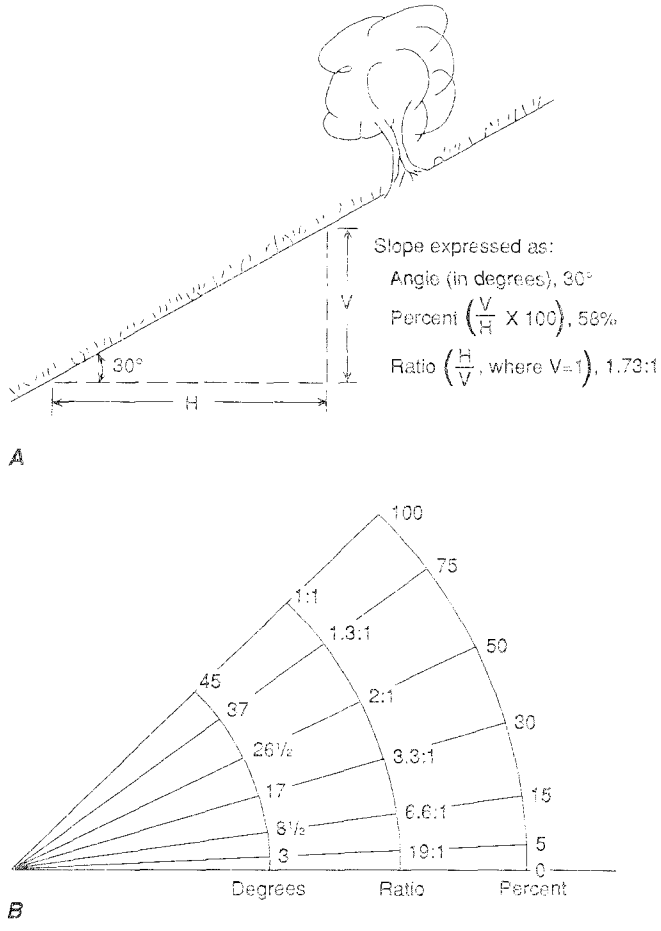

FIGURE 5.—Measures of slope of the ground surface. *A*, Schematic cross section of a hillside for which slope is measured in degrees from the horizontal, as a percent, and as the ratio of horizontal (H) to vertical (V) dimensions. *B*, Interrelation of these measures for different slopes.

little grading for development. Steep slopes (greater than 50 percent) are already steeper than standard 2:1 (horizontal:vertical) cut and fill slopes, and so they cannot support development requiring flat space unless cuts and fills steeper than 2:1 can be tolerated. The intervening moderate slopes (15-50 percent) are steep enough to require grading for flat space but gentle enough to permit grading by standard means, and so they are the principal areas where hillside development is possible. Within the moderate slope interval, cost of hillside development is sensitive to slope. Grading volume increases sharply with increasing slope (fig. 6), and deeper cuts typically encounter materials that are more difficult and costly to excavate.

Slope can be described in varying detail. The three slope intervals shown on plates 4 to 6 are derived from six intervals on the 1:125,000-scale slope map of the San Francisco Bay region (U.S. Geological Survey, 1972). Minimum diameter of areas or boundary intricacies retained on plates 4 to 6 is about 1 mm, which represents 400 ft on the ground. Accuracy of the slope determinations is limited by the photomechanical interpretation of contour spacings used to prepare the original slope map and by accuracy of the topographic maps used.

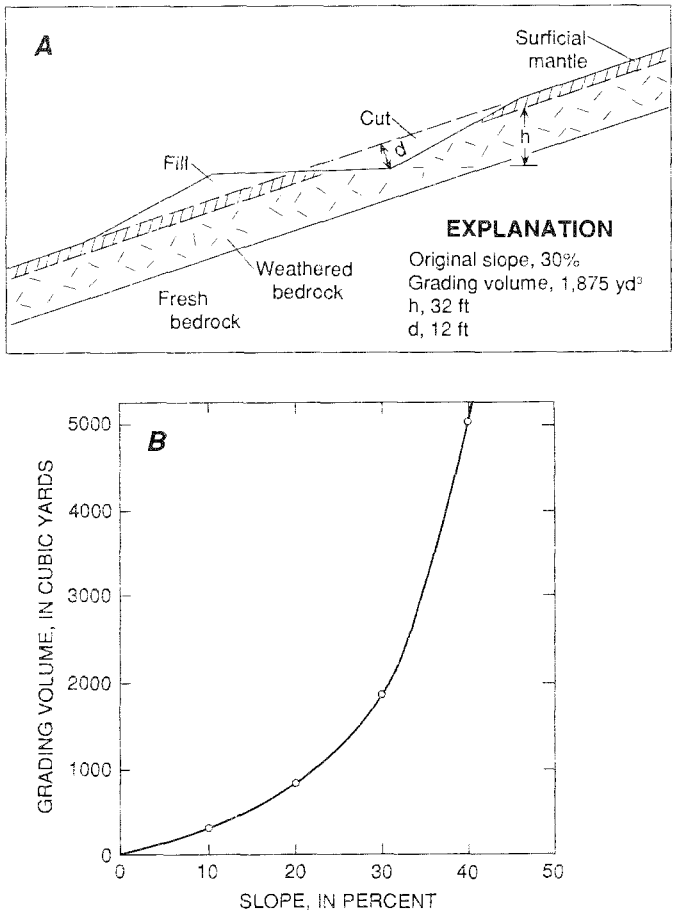

FIGURE 6.—Relation of slope to the excavation volume necessary to create a level cut-and-fill pad 80 by 80 ft using standard 2:1 cut-and-fill slopes. *A*, Schematic cross section of hillside showing cut-and-fill pad, weathered and fresh bedrock, and surficial mantle. *B*, Graph relating grading volume to original slope of ground surface.

Distribution of the three slope intervals varies throughout the region in response to different materials and geomorphic histories. The 15-percent slope boundary tends to separate erosional from depositional terrain, so that major areas of gentle slope coincide with alluvial flatlands of the valleys. Moderate to steep slopes characterize most hillside terrain, and here differences in erosional behavior of materials have produced a close relation between slope and material character. Some materials units, for example, contain almost entirely steep slopes, whereas a few contain largely gentle slopes. Likewise, systematic differences in slope can aid in distinguishing contrasting parts within heterogeneous materials units. Slope differences on plates 4 to 6 that form bands along the strike length of a unit, or that distinguish parts of a unit along its length, probably mark differences in bedrock and mantle materials. More sensitive slope distinctions can be made by using aerial photographs or topographic maps, and digital elevation data are increasingly being used to map slope in detail.

Interpretation of slope is also useful for estimating character and thickness of surficial mantle and severity and depth of weathering. Material that makes up gentle slopes is generally stable except for very slow surface erosion, and this stability provides time for weathering and related processes to develop clayey subsoil in surficial mantle. In a similar manner, weathering of bedrock on gently sloping old upland surfaces can be severe and can penetrate beyond the typical weathering depths of 20-30 ft. On steep slopes, in contrast, downslope movement of mantle mixes it and incorporates rock fragments from underlying bedrock. On such slopes, bedrock is eroded relatively rapidly, limiting the depth of bedrock weathering, and soil erosion is generally rapid enough so that clayey subsoil cannot form. On moderate slopes, movement of surficial mantle tends to be slower and weathering effects are generally intermediate between those on gentle and steep slopes. Particularly thick accumulations of surficial mantle tend to develop at toes of steep slopes and in swales, except where erosion by streams or waves is active.

OVERVIEW OF MATERIALS AND SLOPES IN THE REGION

Plates 1 to 6, in combination with the unit descriptions, provide abundant and detailed information on materials and slopes throughout the region. So that the major characteristics of the various materials are not lost in details, we here provide a brief overview of materials and slopes in the region. In particular, we describe how the colors on plates 1 to 6 reflect fundamental properties of hillside materials in the region, so that basic material properties can be read quickly from the maps.

Table 5 provides an overview of the eight major groups of hillside materials in the region. Materials include bedded sedimentary rocks of several varieties: soft young sedimentary rocks are designated by yellow colors and unit labels in the 100's; firm Tertiary sedimentary rocks are designated by green colors and labels in the 300's and 400's; siliceous sedimentary rocks, distinguished because of their anomalous hardness, are designated by orange color and labels in the 500's; and older Mesozoic sedimentary rocks are designated by blue colors and labels in the 600's. Volcanic rocks, designated by brown colors and labels in the 200's, differ from the sedimentary rocks in hardness, quality of layering, and other fundamental properties. Deformed rocks of the Franciscan assemblage, which underlie much of the region, are subdivided by basic material character: coherent masses of deformed sandstone, which are colored gray and designated by labels in the 700's, are distinguished from the mixed and sheared clayey rocks of melange, which are designated by red colors and labels in the 800's. Hard homogeneous rocks, designated by shades of purple and labels in the 900's, are distinct from these various other materials in the relative homogeneity of their bedrock materials. Other general characteristics of these major groups, including topographic character and the relation between component materials and landforms, are described in table 5.

Each of these primary groups is systematically subdivided, and the scheme of subdivision is shown in the explanations of plates 1 to 6. Different shades of the major colors are used to designate the subdivisions. For example, within the soft sedimentary rock designated by yellow colors, different shades of yellow designate different proportions of conglomerate, sandstone, and clayey rock.

In these ways, the map colors were chosen to reflect material character. By examining the map explanation, the reader can discern the logic of unit groupings and their map colors, and so learn to interpret the maps at a glance. Once this organization is comprehended, the colors provide an immediate overview of the materials that are described in detail in the numbered unit descriptions.

SUMMARY

The maps and unit descriptions of this report constitute a systematic, regional-scale description of the slopes and properties of materials that affect engineering use of land in hillside areas of nine counties in the San Francisco Bay region. The information can be used to anticipate problems and advantages of engineering use of the ground at particular places, or as basic data to create regional predictive maps of hazardous geologic processes that are influenced by hillside materials or slopes.

REFERENCES CITED IN TEXT

Bates, R.L., and Jackson, J.A., eds., 1987, Glossary of Geology: Alexandria, Virginia, American Geological Institute, 788 p.

Bramlette, M.N., 1946, The Monterey formation of California and the origin of its siliceous rocks: U.S. Geological Survey Professional Paper 212, 57 p.

Compton, R.R., 1962, Manual of field geology: New York, John Wiley, 378 p.

Cummings, J.C., Touring, R.M., and Brabb, E.E., 1962, Geology of the northern Santa Cruz Mountains, California, *in* Bowen, O.E., Jr., ed., Geologic guide to the gas and oil fields of northern California: California Division of Mines and Geology Bulletin 181, p. 179-220.

Davis, S.N., and DeWiest, R.J.M., 1966, Hydrogeology: New York, John Wiley, 463 p.

Ellen, S.D., Peterson, D.M., and Reid, G.O., 1982, Map showing areas susceptible to different hazards from shallow landsliding, Marin County and adjacent parts of Sonoma County, California: U.S. Geological Survey Miscellaneous Field Studies Map MF-1406, 8 p., scale 1:62,500.

Helley, E.J., Lajoie, K.R., Spangle, W.E., and Blaire, M.L., 1979, Flatland deposits of the San Francisco Bay region, California; their geology and engineering properties, and their importance to comprehensive planning: U.S. Geological Survey Professional Paper 943, 88 p.

International Conference of Building Officials, 1973, Expansion index test, Uniform building code standard no. 29-2: Whittier, Calif., p. 616-618.

———1976, Uniform building code, 1976 edition: Whittier, Calif., 728 p.

Johnson, A.I., compiler, 1964, Conversion factors and miscellaneous tables: U.S. Geological Survey Open-File Report, 38 p.

Krynine, D.P., and Judd, W.R., 1957, Principles of engineering geology and geotechnics: New York, McGraw-Hill, 730 p.

Nilsen, T.H., Wright, R.H., Vlasic, T.C., and Spangle, W.E., 1979, Relative slope stability and land-use planning in the San Francisco Bay region, California: U.S. Geological Survey Professional Paper 944, 96 p.

TABLE 5.—*Overview of hillside materials and slopes of the San Francisco Bay region, showing dominant physical and topographic characteristics of the major groupings of materials*

Materials group	Units	Colors on plates 1-6	Physical properties	Effects of weathering	Expansivity	Topographic character	Geologic units
Soft sandstone, conglomerate, and clayey rock	100's	Yellows	Soft to firm sandstone, mudstone, and conglomerate that includes hard clasts. Somewhat regular distribution of materials along very thick bedding	Little effect except much free clay in weathered material	Typically much expansive material in bedrock and mantle	Typically subdued topography of gentle slopes, but in East Bay Hills includes steep slopes. Correlation between topography and underlying materials is good in places; clean sandstone and conglomerate generally underlie topographic highs, clayey rocks underlie lows	Largely Pliocene and younger deposits including Santa Clara, Merced, and Tehama Formations
Volcanic rock	200's	Browns	Hard flow rock and firm fragmental rock that may contain hard blocks. Layers generally very thick. Many broad areas underlain by single rock types	Little effect on fragmental rock and rhyolitic flow rock; substantial free clay released in andesitic rock	Local expansive material in bedrock and mantle	Broad, bold topography with moderate slopes. Generally little obvious correlation between topography and underlying materials, but locally correlation is dramatic	Largely Sonoma Volcanics
Firm sandstone and clayey rock	300's and 400's	Greens	Firm sandstone and clayey rock. Various compositions, many of which include volcanic components that weather to expansive materials. Regular distribution of materials along bedding	Some changes in hardness and fracture spacing; abundant free clay released in much	Substantial to abundant expansive material in mantle and, to lesser degree, in bedrock	Typically moderate to steep slopes, but includes a range of topographic styles. Generally good correlation between topography and underlying material; ridgecrests generally are underlain by sandstone, valleys and lows by clayey rocks.	Tertiary sedimentary rocks, such as Briones and Neroly Formations
Siliceous rock	500's	Orange	Hard siliceous shale. Repetitively and thinly bedded, closely fractured. May include firm sedimentary rocks like 300-400's.	Little effect except change in color	Local expansive material in bedrock and mantle	Commonly forms ridgecrests and other topographic highs	Mesozoic and Tertiary siliceous rocks, such as Claremont Shale of the Monterey Group
Well-bedded, hard to firm sandstone and clayey rock	600's	Blues	Hard to firm, well-bedded sandstone and clayey rock. Little variety in composition and hardness, broad range in bedding thickness and fracture spacing. Regular distribution of materials along bedding	Significant reduction in hardness and fracture spacing, especially in clayey rocks where free clay is released	Some expansive material, especially in mantle	Typically steep slopes. Good correlation between topography and underlying material; linear ridgecrests are underlain by sandstone, parallel valleys and lows by clayey rocks	Largely units of the Cretaceous Great Valley sequence
Deformed hard sandstone and clayey rock	700's	Grays	Hard to firm sandstone and clayey rock. Lacks prominent bedding, fracture spacing typically close to moderate. Includes lesser clayey sheared rock like 800's. Irregular distribution of materials	Strong effect; opens fractures and softens rock	Typically unexpansive	Rugged forested topography of steep slopes	Franciscan sandstone
Mixed clayey sheared rock, hard blocks, and masses of fractured hard rock	800's	Reds	Irregularly distributed (1) sheared clayey rock containing variably abundant hard blocks and (2) coherent masses of hard to firm rock like 700's. Sheared clayey rock ranges from soft clay gouge to closely sheared firm to hard clayey rock. Also includes serpentinite, which is sheared and has hard blocks but little clay. Highly irregular distribution of materials on all scales, with hard and soft materials commonly juxtaposed	Some effect on sheared rock; strong effect on coherent masses, as described for 700's	Expansive material common in sheared clayey rock and overlying mantle, uncommon elsewhere	Subdued to rugged terrain of gentle to steep slopes. Sheared clayey rock forms rounded, grass-covered zones with prominent outcropping rocks; coherent fractured rock forms rugged wooded areas	Franciscan melange and serpentinite
Hard homogeneous rock	900's	Purples	Unbedded, largely homogeneous, hard rock. Lacks clay where fresh	Variable effect. In some materials, produces soft to firm disintegrated rock to depths of many tens of feet	Generally unexpansive	Moderate to rugged topography of moderate to steep slopes	Granitic rock, diabase, and unsheared ultramafic rock

Stearns, N.D., 1927, Laboratory tests on physical properties of water-bearing materials: U.S. Geological Survey Water-Supply Paper 596-F, p. 121-176.

Tabor, R.W., Ellen, S.D., Clark, M.M., Glancy, P.A., and Katzer, T.L., 1983, Geology, geophysics, geologic hazards and engineering character of earth materials in the Washoe Lake area: text to accompany maps of the environmental series, Washoe City quadrangle, Nevada: Nevada Bureau of Mines and Geology Report, Open-File 83-7, 87 p.

Todd, D.K., 1959, Ground-water hydrology: New York, John Wiley, 336 p.

Tolman, C.F., 1934, Geology of the Murphy damsite on Stevens Creek, Santa Clara County, California, *with an appendix* Report on permeability of Santa Clara formation at Stevens Creek damsite, by J.F. Poland: Stanford, Calif., report to Santa Clara Valley Water Conservation District, 42 p.

U.S. Geological Survey, 1972, Slope map of the San Francisco Bay region, California: U.S. Geological Survey, scale 1:125,000, 3 sheets.

U.S. Soil Conservation Service, 1968, Soils of Santa Clara County [Calif.]: Washington, D.C., U.S. Government Printing Office, 227 p.

Wagner, R.J., and Nelson, R.E., 1961, Soil survey of the San Mateo area, California: U.S. Soil Conservation Service, Series 1954, no. 13, 111 p.

Wentworth, C.M., Ellen, S.D., Frizzell, V.A., Jr., and Schlocker, Julius, 1985, Map of hillside materials and description of their engineering character, San Mateo County, California: U.S. Geological Survey Miscellaneous Investigations Map I-1257-D, scale 1:62:500.

Wenzel, L.K., 1942, Methods for determining permeability of water-bearing materials, with special reference to discharging-well methods: U.S. Geological Survey Water-Supply Paper 887, 192 p.

Abbreviated unit descriptions of hillside materials

Map unit (see pls. 1-6)	Geologic unit, (age), and location (see discussion in text)	Composition (see discussion in text; fig. 2)	Physical properties (see discussion in text): Hardness (see tables 2,3)	Bedding thickness (see table 3)	Fracture spacing (see table 3)
100	Gravel deposits (Q), in Napa Valley and Sonoma Valley areas.	Largely conglomerate with dirty sandstone matrix...	s, h clasts m / same?	10-20ft	a
		Some sandstone.....	(s)f / same?	10-20ft	(a)c-m / same?
		Some claystone.....	s / s?	10-20ft	a?
101	**Santa Clara Formation**, undivided (QT), in San Francisco Peninsula and Santa Clara Valley areas.	Largely conglomerate with dirty sandstone matrix...	f-s, h clasts m-w	m(k-5ft)30ft?	a
		Some sandstone, siltstone, and claystone.....	f-s	m(k-5ft)30ft?	c-m / same?
102	Corte Madera facies of **Santa Clara Formation** (QT), in San Francisco Peninsula area.	Largely conglomerate with dirty sandstone matrix...	s, h-f clasts (m)5ft	vk	a
		Some fine-grained sandstone and siltstone.....	s / s?	m-vk	c-m / same?
		Minor claystone.....	s / s?	n	--
		Minor calcite-cemented sandstone.....	h	--	c-m
103	Arastradero facies of **Santa Clara Formation** (QT), in San Francisco Peninsula and Santa Clara Valley areas.	Not seen in field.			
		Largely conglomerate with clean fine-grained sandstone matrix.....	s, h clasts m	(vk?)	a
		Some clean sandstone.....	s	?m-vk	c-m / same?
		Minor(?) silty claystone.....	s / s?	--	--
104	Woodside facies of **Santa Clara Formation** (QT), in San Francisco Peninsula area.	Not seen in field.			
		Largely conglomerate, probably with dirty sandstone matrix.....	s-f, f-s clasts / s-f, f clasts	(vk?)	a
		Some(?) sandstone, siltstone, and claystone.....	f-s	--	c-m / same?
105	Stevens Creek facies of **Santa Clara Formation** (QT), in San Francisco Peninsula and Santa Clara Valley areas.	Largely conglomerate with clayey sandstone matrix..	f-s, h clasts m	vk-100ft+	a
		Minor clayey fine-grained sandstone and claystone..	f-s	m-6ft	c-m / same?
106	Los Gatos facies of **Santa Clara Formation** (QT), in San Francisco Peninsula and Santa Clara Valley areas.	Not seen in field.			
		Largely conglomerate with clean to silty fine-grained sandstone matrix.....	s, h clasts (m)w?	(vk)?	a
		Some clean fine-grained sandstone.....	s	?m-vk	c-m / same?
		Minor(?) claystone.....	s-f	--	--

107	Searsville facies of **Santa Clara Formation** (QT), in San Francisco Peninsula and Santa Clara Valley areas.	Largely conglomerate with dirty sandstone matrix...	s-f, s-h clasts m / s-f, h clasts	(vk?)	a
		Some to much siltstone and pebbly to clayey sandstone.....	f-s	?m-vk	c-m / same?
		Minor claystone.....	f-s	--	--
108	Conglomerate member of **Ohlson Ranch Formation of Higgins (1960)** (T), in Mendocino highlands.	Not seen in field.			
		Largely conglomerate with clean to clayey sandstone matrix.....	s, h clasts	vk	a?
		Some(?) clean very fine grained sandstone.....	s	vk	c-m
110	**Montezuma Formation** (Q), only in Montezuma Hills.	Largely sandstone, clayey to silty, and siltstone..	f-s / (f)s	(vk-a)n-k	vc-m / c-m
		Some(?) clean sandstone and pebble conglomerate....	s	(n-4ft)	(a)m-w
		Minor to some(?) claystone.....	f	--	c-vc / ?c-m
		Rare calcite-cemented sandstone.....	h	m?	m-w
111	Sedimentary rocks (QT), only near Mission San Jose District of Fremont.	Largely clayey sandstone.....	s / f?	k-10ft	a
		Some clean sandstone.....	s	k-10ft	a
		and mudstone.....	s / f?	--	c-vc / ?
		Minor(?) conglomerate, much clean.....	s, h clasts c-vc	k	a
112	**Merced Formation** (QT), only in Santa Clara County near Palo Alto.	Largely clean fine-grained sandstone.....	s / s?	(5-30ft)?	c-m
		Probably some siltstone and claystone.....	f-s?	--	--
113	**Merced Formation** (QT), only in San Mateo County and San Francisco.	Largely sandstone, much clean, much silty and clayey.....	s / (f)s	5-30ft	m-vw
		Much siltstone and claystone.....	f	(n-vk)200ft	c-vc / ?
		Minor cemented conglomerate and shell breccia.....	h	to 6ft	?m-w
		Minor fine ash tuff.....	s	to 6ft	--
114	**Merced Formation** (QT), only near Bolinas.	Largely fine-grained sandstone, much clean, much silty.....	(s)f / f	k-30ft	c(m-w)5ft / (m-w)5ft
		Some siltstone.....	s-f / f	k-30ft	vc-m? / ?
		Minor carbonate-cemented concretions.....	h	m-k	m-w
		and pebble conglomerate.....	(s)f,(h)clasts c-vc / f, (h) clasts	--	?(m-w)5ft
115	**Wilson Grove Formation** (T), in Blucher Hills area, southwest of Santa Rosa.	Much clean fine-grained sandstone.....	s / f-s	m(k-10ft)30ft	(w-10ft)a
		Much silty and clayey fine-grained sandstone.....	f-s / f	m(k-10ft)30ft	(c)m / (w-10ft)a
		Some siltstone and sandy claystone.....	f-s / f	(k-10ft)?	vc-m / ?
		Minor(?) conglomerate.....	f-s, h clasts (c)m	(n-k)vk	(w-10ft)a
		Minor tuff and tuff breccia.....	f-s / (f)qf	(to 15ft)50ft	vc-vw / m(w)vw
		Minor carbonate-cemented rock.....	h	n-k	m-w

Abbreviated unit descriptions of hillside materials

Map unit (see pls. 1-6)	Geologic unit, (age), and location (see discussion in text)	Composition (see discussion in text; fig. 2)	Physical properties (see discussion in text): Hardness (see tables 2,3)	Bedding thickness (see table 3)	Fracture spacing (see table 3)
116	**Ohlson Ranch Formation of Higgins (1960)**, undivided (T), in Mendocino highlands.	Largely very fine grained sandstone, clean to silty	s	vk-a	c-m
		Minor to some conglomerate with clean to clayey sandstone matrix	s, h clasts	vk	a?
		Rare siltstone and mudstone	--	--	--
		Minor concretions	s/h	--	(m)?
117	Sandstone member of **Ohlson Ranch Formation of Higgins (1960)** (T), in Mendocino highlands.	Almost all very fine grained sandstone, clean to silty	s	vk-a	c-m
		(?)Minor conglomerate, siltstone, and mudstone	--	--	--
		Minor concretions	s/h	--	(m)?
118	Garrity unit of Wagner (1978) (T), near El Sobrante at north end of East Bay Hills.	Much clean medium-grained sandstone	f-s / same?	m-20ft+	a
		Much clayey fine-grained sandstone	f-s / f?	m(vk)20ft+	vc-m / ?
		Some conglomerate with clean sandstone matrix	f-s, h clasts (c)m / same?	m-20ft+	a
		Minor to some mudstone	f-s / f?	--	vc-c / ?
		Minor tuff and tuff breccia like unit 282	f	n(k-10ft)15ft+	(m-6ft)
120	Sedimentary rocks (QT), largely equivalent to Livermore Gravels of Hall (1958), only near and south of Livermore Valley.	Much to most is mudstone and clayey sandstone	f	m(k-15ft)100ft	vc-m / ?
		Some to most is clean sandstone	s	(k-15ft)	a, m-w
		and conglomerate with clean to clayey sandstone matrix	s, h-f clasts (c)m / s, h clasts	m(k-15ft)100ft	a
		Minor tuffaceous sandstone and tuff	qf	(k-15ft)	(vc-w)4ft / (m-w)4ft
		Minor cemented rock	f / h?	--	c-m
121	Sedimentary rocks (QT), only on east side of Santa Clara Valley near Evergreen.	Much(?) mudstone	f	?m-vk	c-vc / ?
		Much(?) conglomerate with clayey sandstone to grit matrix	s, h-f clasts (c)m / s, h clasts	?m-vk	a
		Some(?)sandstone	?s-f	?m-vk	--
		Minor cemented rock	h	--	--
122	Sedimentary rocks (QT), only on east side of Santa Clara Valley south of Coyote.	Most is conglomerate with clean to clayey sandstone matrix	s, (h)f clasts (c-m)w / s?, h clasts	m(vk)15ft+	a
		and clayey sandstone	f-s / f?	m(vk)15ft+	c-m / ?

		Some clean sandstone	s s?	m(vk)15ft+	a
		and mudstone	f f?	m(vk)15ft+	c-vc ?
		Minor tuff associated with unit 230	--	--	--
123	Nontuffaceous member of **Glen Ellen Formation** (Q and (or) T), in northern part of region; **Huichica Formation** (T), in the Napa to Santa Rosa area excluding area southwest of Napa distinguished as unit 153; older fluvial deposits (T), in northern Mayacmas Mountains.	Some conglomerate with largely clayey, some clean, sandstone matrix	s,(h)f clasts (c-m)w same?	(k-30ft)100ft	(a)m-10ft
		Some sandstone, largely clayey, some clean	(s)f same?	k-30ft+	c-w (m-w)20ft
		Some mudstone, siltstone, and claystone	f-s f?	k-30ft+	vc-c (m-w)20ft
		Minor tuff and tuffaceous rock	s-f s(f)qf	m(k-15ft)30ft	vc-m? (m-w)20ft
		Minor partially cemented conglomerate	f	--	--
124	**Tehama Formation** (T), including Putah Tuff Member, only north and west of Montezuma Hills.	Some to much conglomerate with clean to clayey sandstone matrix	(s)f, h clasts (c)m	(15-50ft)100ft	a
		Some to much sandstone, much clean, much clayey	s-f	(15-50ft)100ft	a, m-w
		Some to much sandy claystone	f	(15-50ft)	c-vc ?
		Minor siltstone and mudstone	f	(15-50ft)	c-vc ?
		Minor calcite-cemented conglomerate	h-f	(k-5ft)15ft	5-10ft
		Minor tuff	f	3-10ft	m(w-6ft)20ft
125	**Tehama Formation** (T), only in general vicinity of Mount Diablo.	Most to almost all is clayey sandstone	(f)s	k(5-25ft)100ft+	c-m ?
		and sandy mudstone to claystone	f	k(5-25ft)100ft+	(vc-c)m ?
		Some clean sandstone	s	k(5-25ft)	a-vw
		and conglomerate with clean to clayey sandstone matrix	s, h clasts (c)m	k(5-25ft)	a-vw
		Minor calcite-cemented rock	f-h	(m-k)4ft	(m-w)4ft
		Minor tuffaceous sandstone and conglomerate	qf	--	m-w
		Local blue sandstone and clayey rock like unit 352	--	--	--
126	**Oro Loma Formation of Briggs (1953a)** (T), east of Livermore Valley.	Most is clayey sandstone	f	m(10-100ft)	c-m ?
		and mudstone	f	m(10-100ft)	c-vc ?
		Some clean sandstone	s	(m-15ft)100ft	(a)
		and conglomerate with clean sandstone matrix	s, (h)f clasts (c-m)w	(3-5ft)100ft+	(a)
		Minor calcite-cemented rock	h	m-k	(m-w)5ft
		and tuffaceous rock	qf-h	m-k	(m-w)5ft
127	**Purisima Formation** (T), near Pajaro River at southern end of Santa Cruz Mountains.	Much clean sandstone	(s)f	k(10-50ft)	(m-w)6ft
		and conglomerate with largely clean sandstone matrix	(s)f, h clasts (c)m	k(10-50ft)	(m-w)6ft
		Much clayey sandstone	f	k(10-50ft)	(c-m)w m(w)
		and mudstone with lesser shale	f	k(10-50ft)	c-vc ?m-w
		Minor cemented rock	h	m-k	w

Abbreviated unit descriptions of hillside materials

Map unit (see pls. 1-6)	Geologic unit, (age), and location (see discussion in text)	Composition (see discussion in text; fig. 2)	Physical properties (see discussion in text): Hardness (see tables 2,3)	Bedding thickness (see table 3)	Fracture spacing (see table 3)
128	Upper part of **Mulholland Formation of Ham (1952)** (T), in East Bay Hills east of Oakland.	Most(?) is silty and clayey sandstone.....	s(f)qf / (f)qf	(m-10ft)100ft	c(m-w)4ft
		and conglomerate with silty and clayey sandstone matrix.....	(f)s, h clasts (c)m / f, h clasts	(m-10ft)30ft+	a-vw
		At least some mudstone to siltstone.....	(f)s / f	(m-10ft)100ft	c-vc / ?
		Minor cemented rock and limestone.....	h	k	--
		and tuff and bentonite.....	--	m	--
129	Lower part of **Mulholland Formation of Ham (1952)** (T), in East Bay Hills east of Oakland.	Much sandstone, clean to dirty.....	(f)s / f	n(m-10ft)20ft	c(m-6ft)
		Much mudstone, some calcareous.....	(f)h	n(m-10ft)100ft+	c-vc / ?
		Minor to some cemented sandstone.....	h	(m-10ft)20ft	m-6ft
		Minor tuff and bentonite.....	--	m	--
130	**Contra Costa Group**, undivided (T), in most of East Bay Hills.	Some to much mudstone.....	f	m(5-40ft)110ft	c-vc / m-w
		Some to much sandstone, clean to dirty.....	s-f / same?	m(5-40ft)	m-w
		Some to much conglomerate with dirty sandstone matrix.....	s-f, h clasts (c)m / same?	m(5-40ft)	m(w-vw)a
		Minor calcite-cemented rock.....	h	to k+	?m-w
		Rare tuff, diabase, and basalt.....	--	--	--
131	**Contra Costa Group**, undivided (T), only in area west of San Pablo Reservoir in East Bay Hills.	Some mudstone.....	f	m(5-30ft)	c-vc / ?m-w
		Some dirty fine-grained sandstone and siltstone....	f	m(5-30ft)	c-vc / ?m-w
		Some dirty coarse-grained sandstone.....	s-f	m(5-30ft)	c-w, vw-a / m-w, vw-a
		Some conglomerate with dirty sandstone matrix.....	s-f, h clasts c-m	m(5-30ft)	(vw-a)m-w
		Minor calcite-cemented rock.....	f-h	m-k	m-6ft
		Minor tuff and basalt.....	--	--	--
132	Clastic member of **Moraga Formation** (T), in East Bay Hills.	Like unit 133.			
		Some to much mudstone.....	(f)s / f?	m(vk-30ft)	c-vc / ?m-w
		Some to much dirty sandstone.....	f(s) / f?	m(vk-30ft)	c-m / ?
		Some to much conglomerate with dirty sandstone matrix.....	(f)s, h clasts c-m / f?, h clasts	m(vk-30ft)200ft	a
		Minor cemented rock.....	h	--	c-w
		Minor tuff and basalt.....	f-h	vk	c-w

133	**Orinda Formation** (T), only in East Bay Hills.	Some to much mudstone to siltstone.....	f	k(5-100ft+)	vc-c / ?m-w
		Some to much dirty sandstone.....	f-s / (f)s	k(5-100ft+)	vc-m / ?m-w
		Some to much conglomerate with dirty sandstone matrix.....	f-s, h clasts c-m / (f)s, h clasts	k(5-100ft+)	vw-a
		Minor calcite-cemented rock.....	(qf)h	m-k	?m-w
		Minor tuff and diabase.....	--	--	--
134	**Orinda Formation** (T), only in area north of Livermore Valley.	Much clayey sandstone.....	f	m(k-10ft)50ft+	c-vc / ?
		Much mudstone.....	(f)s / f	m(k-10ft)50ft+	c-vc / ?
		Some clean sandstone.....	s-f / same?	m(k-10ft)50ft+	c(m)w
		Minor to some conglomerate with clay-clogged sandstone matrix.....	s-f, h clasts (c)m	m(k-10ft)50ft+	a
		Minor calcite-cemented rock.....	h	k-4ft	(m-w)5ft
		Minor tuff and tuffaceous sandstone.....	f-h	(k-5ft)	c-vc, m-w / m-4ft
140	Tuffaceous member of **Glen Ellen Formation** (Q and (or) T), in area east of Santa Rosa Valley.	Much tuff.....	s-f / s(f)qf	m(k-30ft)	c-vc, m-w / (m-w)20ft
		and tuffaceous rock of silt size to very coarse sand size.....	s-f	m(k-15ft)30ft	(c-vc)w / (m-w)20ft
		Some conglomerate, as described for unit 123.....	--	--	--
		Some sandstone, as described for unit 123.....	--	--	--
		Some clayey rock, as described for unit 123.....	--	--	--
141	Sedimentary deposits (T), near Napa and Sonoma Valleys.	Proportions highly variable.			
		Some to much tuffaceous sandstone and tuff.....	s-f / f?	m(10-30ft)	c-w / ?m-w
		Some to much conglomerate with clean to clayey sandstone matrix.....	s, h clasts (c)m / same?	m-30ft	vw-a
		Some to much silty claystone.....	(s)f / same?	m(10-30ft)	c-m / ?
		Minor andesitic or rhyolitic flow rock like units 234 and 218.....	--	--	--
150	**Montezuma Formation** (Q), only south of San Pablo Bay at north end of East Bay Hills.	Largely clayey rocks, including mudstone, claystone, siltstone, and clayey fine-grained sandstone.....	f-s	m-30ft	a, c-w
		Some to much clean to silty sandstone.....	s	m-30ft	a
		and conglomerate with variably silty sandstone matrix.....	s, h-f clasts c-m	m-30ft	a
151	Sedimentary rocks (QT), only along Santa Clara Valley margin in San Jose-Fremont area.	Largely mudstone, siltstone, and clayey sandstone..	f-s / f	m(3-15ft+)	c-m / ?
		Some conglomerate with clean to clayey sandstone matrix.....	(s),h clasts c-m / same?	m(3-15ft+)	a-vw?
		Minor calcite-cemented rock.....	h	m-5ft	?m-w

Abbreviated unit descriptions of hillside materials

Map unit (see pls. 1-6)	Geologic unit, (age), and location (see discussion in text)	Composition (see discussion in text; fig. 2)	Physical properties (see discussion in text): Hardness (see tables 2,3)	Bedding thickness (see table 3)	Fracture spacing (see table 3)
152	Sedimentary rocks (QT), only in hills east of San Jose-Fremont area.	Most is mudstone, siltstone, and clayey very fine grained sandstone	f / f?	m(3-15ft+)	vc-m / ?
		Some dirty sandstone	f-qf / ?f-h	m(3-15ft+)	c(m-w)5ft
		and conglomerate with dirty sandstone matrix	f-qf, h clasts c-m / ?f-h, h clasts	m(3-15ft+)	c(m-w)5ft
		Minor calcite-cemented sandstone and conglomerate	h	m-5ft	c(m-w)5ft
		Minor tuff and tuffaceous sandstone	--	--	--
		Near Monument Peak, largely clean conglomerate and sandstone	--	--	--
153	Clayey facies of **Glen Ellen** (Q and (or) T) and **Huichica** (T) **Formations**, southwest of Napa.	Almost all mudstone, claystone, and siltstone	s / s-f	vk-a	c-vc / ?
		Minor conglomerate and sandstone as described in unit 123	--	k-30ft+	--
154	**Siesta Formation** (T), in East Bay Hills.	Largely mudstone	f	(m-10ft)20ft	c-vc / ?
		Some to much sandstone, largely dirty and tuffaceous	s(f)qf	(m-10ft)	(c-m)w / (m-w)5ft
		Minor calcite-cemented concretions	h	m	m
		Minor conglomerate, limestone, tuff, and basaltic flow rock	--	to vk	--
155	**Petaluma Formation** (T), in Santa Rosa-Sonoma Valley area.	Largely claystone, sandy claystone, and clayey siltstone	f-s / f	vk-200ft+	c-vc / m
		Some sandstone, clean to dirty	s / s?	n(k-10ft)200ft	vc-m, a / c(m)w, a
		Minor conglomerate with clean to dirty sandstone matrix	s, h clasts (c)w / same?	m-vk	a
		Minor calcite-cemented rock and limestone	h	n-m	c-m
		Minor tuff, tuff breccia, tuffaceous rocks, and diatomite	f-h	m-30ft	--
156	Claystone member of **Petaluma Formation** (T), in Santa Rosa-Sonoma Valley area.	Largely claystone and shale	f-s / f	m(k-vk)100ft+?	vc-c / m?
		Some siltstone	f-s / f	m(k-vk)	vc-c / m?
		Minor sandstone, clean to clayey	s / s-f?	(vn-m)k	(c-m)
		Rare limestone	h	(n)4ft	(c)w

200	Andesite and basalt (T), near Evergreen, southeast of San Jose.	Not seen in field.			
		Intrusive andesite and basalt.....	?f-h / h	--	--
201	Andesite, about 3 mi northwest of Anderson Reservoir, southeast of San Jose.	Largely andesite.....	h-f / h	--	(c)m
		Some serpentinite included in map area.....	--	--	--
202	Andesitic to dacitic plugs and intrusive complexes of **Sonoma Volcanics** (T), in area between Santa Rosa Valley and Howell Mountains.	Largely andesitic intrusive rock.....	h	--	c-w
		Much country rock included in intrusive complexes..	--	--	--
		In area east of Napa, most is breccia.....	f, h blocks m	--	--
203	Rhyodacite intrusions (T), near Marsh Creek, east of Mount Diablo.	Rhyodacitic intrusive rock.....	(h)f / h	--	(m-w)10ft
		(?)Minor metamorphosed country rock.....	(h)?	--	--
204	Rhyolitic plugs and dikes of **Sonoma Volcanics** (T), in area between Santa Rosa Valley and Howell Mountains.	Glassy to lithoidal rhyolitic intrusive rock, some(?) as dense and coherent rock.....	(h)f	--	c-m
		some(?) as breccia.....	f-s, h blocks c-m / f?, h blocks	--	--
		some(?) as highly vesicular to pumiceous rock.....	f-s	--	?c-m
210	**Putnam Peak Basalt** (T), in English Hills, north of Vacaville.	Olivine-bearing basalt, almost all dense flow rock.....	h	vk	(m)w
		minor vesicular rock, interflow breccia, and pillow basalt.....	--	--	--
211	Basalt (QT), only near Concord.	Olivine basalt flows, some vesicular.....	(h)qf	vk	m(w-5ft)7ft
212	Olivine basalt member (Q) of **Clear Lake Volcanics**, near northern boundary of region.	Olivine basalt flows, largely vesicular.....	f / h	3-100ft	m-5ft
		Minor lapilli tuff in places at base.....	f	--	--
213	**Bald Peak Basalt** (T), in East Bay Hills.	Almost all basaltic flow rock.....	f-s, h blocks m-w / h	to 100ft?	(c-w)5ft
		Minor tuff.....	f-s / f?	20ft	?c-vc / ?
		Rare conglomerate, sandstone, siltstone, and limestone.....	--	--	--
214	Basalt flows of **Sonoma Volcanics** (T), near Santa Rosa Valley.	Largely basaltic flow rock, much dense, much vesicular.....	f, h blocks m-w / h	(10-30ft)100ft	m-6ft
		Minor pillow basalt.....	f, h blocks	--	--
		Minor to some dacitic pumice lapilli tuff.....	f	to vk	--
215	**Leona Rhyolite** (T?), in East Bay Hills near Oakland.	Soda rhyolite, largely dense and lithoidal, rarely vesicular or glassy, with sulfides in fresh rock.....	(h)f	a	(vc-w)8ft
216	Rhyolite (T), includes Alum Rock Rhyolite of Crittenden (1951), east of San Jose.	Rhyolite, almost all dense (nonvesicular), with sulfides in some(?) fresh rock.....	h	a	(vc-w)8ft
		Minor vesicular rock.....	s-f / f?	a	(vc-w)?

·Abbreviated unit descriptions of hillside materials

Map unit (see pls. 1-6)	Geologic unit, (age), and location (see discussion in text)	Composition (see discussion in text; fig. 2)	Physical properties (see discussion in text): Hardness (see tables 2,3)	Bedding thickness (see table 3)	Fracture spacing (see table 3)
217	**Clear Lake Volcanics** (QT), in Mayacmas Mountains at northern boundary of region.	Not seen in field.			
		Probably largely rhyolitic flow rock like that in unit 218	(h)f / h	vk-a	c(m-6ft)10ft
		Probably minor to some breccia, tuff breccia, tuff, and scoriaceous rock	--	--	--
218	Rhyolitic flows of **Sonoma Volcanics** (T), in general area between Petaluma Valley and Howell Mountains, excluding area near Calistoga.	Almost all rhyolitic flow rock, much vesicular	(h)f / h	vk-a	c(m-6ft)10ft
		Minor breccia, tuff breccia, tuff, and scoriaceous rock	--	--	--
219	Perlitic rhyolite of **Sonoma Volcanics** (T), in area between Santa Rosa Valley and Howell Mountains.	Much perlite (glass)	f-s / h	(tens of ft)200ft	(vc-m)4ft / m-8ft
		Much nonperlitic rhyolitic flow rock like unit 218	(h)f / h	k(vk)	c(m-6ft)10ft
		Minor tuff and tuff breccia	--	--	--
220	Soda rhyolite flows of **Sonoma Volcanics** (T), in area between Santa Rosa Valley and Howell Mountains.	Almost all dense soda rhyolite flow rock	h	vk-a	m(w-4ft)8ft
		Minor highly vesicular flow rock	f	--	--
		Minor cemented tuff breccia	h	--	--
221	**Northbrae Rhyolite** (T), northwest of Oakland near Berkeley and near San Pablo Reservoir.	Soda rhyolite, dense to vesicular	(h)f	a	c-m, m-4ft / (m-4ft)15ft
230	Basalt (T), only along east side of Santa Clara Valley near Morgan Hill.	Much olivine basalt flow rock, much vesicular	f, h blocks m-w / h	tens of ft	c(m-w)4ft
		Much tuff breccia	(f)s,(h)f blocks(m-w)4ft / s(f)qf?,(h)f blocks	tens of ft	c-vc, m-5ft / (m-5ft)8ft
		Some clean sandstone	s	m(vk)15ft+	a
		and conglomerate with clean sandstone matrix	s, (h)f clasts (c-m)w	m(vk)15ft+	a
231	**Page Mill Basalt** (T), only in Santa Clara County near Palo Alto.	Much basaltic flow rock, dense to vesicular	(h)f / h	5-60ft+	c-m
		Much agglomerate	s-f, h blocks m-w / same?	to 40ft+	--
		Minor tuff	s / s?	to 6ft	--

232	**Page Mill Basalt** (T); **Mindego Basalt and other volcanic rocks** (T); unnamed volcanic rocks (KJ); only in San Mateo County.	Almost all basaltic rock,			
		much as flows and intrusives	f-s, h blocks (m)w / h	vk	(c-m)w
		much as breccia, pillow lava, and agglomerate	f-s, h blocks m-5ft / f, h blocks	vk	--
		Minor sandstone and mudstone	--	--	--
233	Basalt and andesite member of **Moraga Formation** (T), in East Bay Hills.	Most is basaltic and andesitic flow rock, some vesicular	f / h	25-150ft+	(c-w)10ft
		Some scoria and breccia	f-h	10ft+	(m-6ft)10ft?
		tuff breccia	f, h blocks	10ft+	--
		and mudstone, sandstone, and conglomerate as in unit 132	--	k-100ft	--
		Minor cemented rhyolitic tuff and breccia	h	10-25ft+	--
		Rare limestone	h	to 40ft	--
234	Andesitic to basaltic flows of **Sonoma Volcanics** (T), in area between Santa Rosa Valley and Howell Mountains.	Most is andesitic to basaltic flow rock, some vesicular to scoriaceous	f-s, h blocks (m) / h	(15-25ft)50ft	c(m)8ft
		Some breccia, tuff breccia, and agglomerate	s, h-s blocks (m)5ft / f, h blocks	(k-25ft)	(vc-m)5ft / (m)
		and ash-flow tuff like unit 270	f	(k-25ft)	(m-w)
235	Andesitic and basaltic flows of **Sonoma Volcanics** (T) disturbed by landsliding, near Wooden Valley northeast of Napa.	Not seen in field. Like unit 234 except rock mass is disrupted and broken (by landslide movement) into coherent blocks at least 500 ft across.	--	--	--
236	**Sonoma Volcanics** (T), in vicinity of Burdell Mountain, Marin highlands.	Not seen in field. Largely andesitic to basaltic flow rock with some fragmental rock, like unit 234.	--	--	--
		Minor rhyolite like unit 218 in places near base.	--	--	--
237	Andesitic to basaltic flows of **Sonoma Volcanics** interbedded with fine-grained sedimentary rocks including diatomite (T), in Sonoma Mountains.	Much andesitic to basaltic flow rock like that in unit 234	f-s, h blocks (m) / h	10ft(15-30ft)50ft	(c-w)5ft
		Much tuffaceous and diatomaceous siltstone and claystone, diatomite, and tuff	f-s / f	10ft(15-30ft)50ft	vc-m / ?
		Minor clean sandstone	s	k-vk	a?
238	Ash-flow tuff of **Sonoma Volcanics** interlayered with andesitic to basaltic flows (T), in area between Santa Rosa Valley and Howell Mountains.	Much to most is ash-flow tuff like unit 270	(f)s / f	(40-100ft)300ft?	m(w-5ft)20ft
		Much andesitic to basaltic flow rock like that in unit 234	f-s, h blocks (m) / h	5ft(20ft)100ft	c(m)w
		and fragmental rock like that in unit 234	s, h-s blocks (m)5ft / f, h blocks	(k-25ft?)	(vc-m)5ft / (m)
		Minor tuffaceous sandstone and siltstone	f-s	k-vk	c-vc / a?
239	Volcanic rocks (T), only at Lone Hill, south of San Jose.	Not seen in field. Probably largely dacite and perlitic dacite, most altered	?(h)s	to 200ft	--
		Some to much tuff and tuffaceous shale, most altered	?(f-h)s	vk	?c-m

Abbreviated unit descriptions of hillside materials

Map unit (see pls. 1-6)	Geologic unit, (age), and location (see discussion in text)	Composition (see discussion in text; fig. 2)	Physical properties (see discussion in text): Hardness (see tables 2,3)	Bedding thickness (see table 3)	Fracture spacing (see table 3)
240	Rhyolitic flows of **Sonoma Volcanics** (T), only in Howell Mountains north and east of Calistoga.	Much rhyolitic flow rock like unit 218.....	(h)f / h	--	c(m-6ft)10ft
		Much hydrothermally altered rhyolitic flow rock....	f-s, h	--	c-vc, vw
		Some tuff.....	f-s	k-vk	?vc-m
		and tuff breccia and agglomerate.....	f-s, h blocks	k(vk)	--
241	Rhyolitic breccia of **Sonoma Volcanics** (T), near Napa.	Rhyolite breccia with dense matrix.....	s(f-h), h blocks m-w / h	--	m(w)10ft
		Minor lithic lapilli tuff like unit 272.....	f-h	--	--
250	Volcanic rocks (K), near Loma Prieta in Santa Cruz Mountains south of San Jose.	Briefly seen in field. Basaltic pillow lava, breccia, tuff breccia, and some diabase, like unit 253.	--	--	--
251	Spilite near Black Point (K), on Sonoma County coast.	Spilitic basalt, similar to unit 253.....	f-h / h	--	c(m-w) / m-vw
253	Greenstone of **Franciscan assemblage** (KJ), throughout most of region; quartz keratophyre of **Franciscan assemblage** (KJ), near Loma Prieta in Santa Cruz Mountains south of San Jose.	Altered basaltic volcanic rock, as pillow lava.....	s-f, h-f pillows (w) / (f)h, h pillows	(tens of ft)	vc-m, w / w
		breccia, tuff breccia, and tuff.....	s-f, h-f blocks (c) / (f)h, h blocks	(tens of ft)	vc(c)m / c-m
		flows and intrusives.....	(f-s)h / h	(tens of ft)	(c-m)w
		Proportions variable; generally much to most is pillow lava, some to much is tuff breccia, minor to some is flows and intrusives.			
		Minor chert (like unit 511) and limestone (like unit 909).....	(h)	--	--
		Some sheared rock like units 800 and 804.....	--	--	--
254	Unsheared metagreenstone of **Franciscan assemblage.** Consists of parts of Franciscan metagreenstone (KJ) having hard topography, as determined by photointerpretation, in Marin highlands.	Slightly metamorphosed greenstone like unit 253, largely nonfoliate. Most is unsheared.....	(f-s)h / (h)	--	vc(c-m)w
		Some is variably sheared and shattered like unit 804.....	(f-s)h / (h)	--	(c-vc)
		Minor to some is severely sheared like unit 800....	f-s, h blocks	--	--
255	Basaltic pillow lava and breccia (J), only in Mendocino highlands; diabase and diabase-basalt breccia (J), in northern Mayacmas Mountains.	Most is basaltic pillow lava and breccia.....	(f)s, h blocks m-w / h-f, h blocks	(tens of ft)	(vc-m)w / vc(m-w)vw
		Some tuff.....	f-s / ?h-f	--	--
		Materials are shattered and somewhat sheared.			

256	Basaltic pillow lava and breccia (J), only in Howell Mountains.	Basaltic rock, much as breccia.....	f, h blocks (c-m)w / h	vk(tens of ft)	c-m, w-5ft
		much as pillow lava.....	f, h blocks (3-6ft)	vk(tens of ft)	c-vc, m-6ft / m, w-8ft
260	Volcanic rocks (T), only near Blossom Hill (exclusive of Lone Hill), south of San Jose.	Largely welded tuff, altered, rhyolitic to dacitic.....	h	to 40ft	m-w, vw-10ft+
		Some to much fine ash tuff or tuffaceous mudstone..	f	tens of ft	c-vc / m
		with minor chert(?) nodules.....	h	m	m-w
261	Welded tuff of **Sonoma Volcanics** (T), in area between Santa Rosa Valley and Howell Mountains.	Largely welded ash-flow tuff.....	h	m(vk-200ft)	c(m-w)5ft
		Some to much unwelded ash-flow tuff like unit 270.....	f	5-150ft+	(m-w)
		Minor bedded tuff.....	f	n-k	--
262	Xenolithic welded tuff(?) of **Sonoma Volcanics** (T), northeast of Napa.	Welded lapilli tuff and tuff breccia.....	h	a	m-4ft
270	Ash-flow tuff of **Sonoma Volcanics** (T), in area between Santa Rosa Valley and Howell Mountains.	Largely pumiceous ash-flow tuff.....	(f)s / f	5-150ft+	(m-w)20ft
		Some welded tuff.....	h	m-40ft	c(m-w)5ft
		Minor tuff breccia,.....	f, h-f blocks (m)w	to 50 ft	vw-a, m-w
		tuffaceous sedimentary rock,.....	f-s	m-vk	c, a
		and nontuffaceous sedimentary rock like unit 141.	s-f	m(k)15ft+	c-m, a
271	Tuff member (Q) of **Clear Lake Volcanics**, near northern boundary of region.	Briefly seen in field. Lapilli tuff, like ash-flow tuff of unit 270.....	f	a?	(m-w)?
272	Lithic tuff of **Sonoma Volcanics** (T), in area between Santa Rosa Valley and Howell Mountains.	Most is lithic and pumice lapilli tuff with scattered blocks, some tuff breccia, minor to some agglomerate and breccia.....	(f-qf)h,(h)blocks(m)4ft	(vk)	m-w, w-20ft
		Minor to some hydrothermally altered rock.....	s-h / f-h	ribs to 50ft	vc-vw
		Minor ash tuff, tuffaceous sedimentary rock, welded tuff, and intrusive rock.....	--	--	--
273	Agglomerate of **Sonoma Volcanics** (T), in area between Santa Rosa Valley and Howell Mountains.	Much tuff breccia, much tuff with scattered blocks, some agglomerate and breccia.....	(qf)h, h blocks(m)2ft	(n-k)20ft+	m(w-10ft)20ft
		Minor ash-flow tuff, flow rock, and tuffaceous sedimentary rock.....	--	--	--
274	Andesite(?) (T), immediately east of Sunol Valley, southwest of Livermore Valley.	Not seen in field. Andesitic or basaltic agglomerate, probably like fragmental rock of units 230 and 234.....	?f-s, h-s blocks / (f), h-f blocks	--	--

Abbreviated unit descriptions of hillside materials

Map unit (see pls. 1-6)	Geologic unit, (age), and location (see discussion in text)	Composition (see discussion in text; fig. 2)	Physical properties (see discussion in text): Hardness (see tables 2,3)	Bedding thickness (see table 3)	Fracture spacing (see table 3)
275	Tuff and volcanic gravel (Q), derived largely from rhyolitic intrusive rocks of Sonoma Volcanics, in area between Santa Rosa and Petaluma Valleys and Napa Range.	Largely breccia or rubble of rhyolite blocks in matrix of tuff or tuffaceous sedimentary rock....	f-s,h blocks(c-m)10ft / f?, h blocks	10-50ft	a,c(m)w
		Some tuff,.....	f-s / f	10-50ft	m
		tuff breccia,.....	f-s, h blocks / f, h blocks	10-50ft	m
		and tuffaceous sandstone and conglomerate.....	f-s / same?	10-50ft	a, m-w
280	**Cache Formation** (QT), near Lake Berryessa, west of Yolo Range.	Most is pumice lapilli tuff and coarse-grained tuffaceous sedimentary rock.....	s(f) / same?	(vk)	m / w-4ft
		Possibly some to much siltstone and claystone.....	--	--	--
281	**Lawlor Tuff** (T), in the monocline north of Mount Diablo.	Some tuffaceous sandstone, clean to clayey.....	(f)s / f	k-50ft+	m-5ft
		Some tuffaceous clayey rock.....	(f)s / f	k-50ft+	vc-m / m-5ft
		Some pumice lapilli tuff and vitric tuff.....	f	10-60ft	c-m, w-5ft / (w-5ft)15ft
		Minor conglomerate and basalt.....	--	--	--
282	**Pinole Tuff** (T), near San Pablo Bay at north end of East Bay Hills.	Some to most is pumiceous tuff.....	f	vk-50ft+	(m-6ft)15ft
		Some to most is tuffaceous sedimentary rock including sandstone, shale, and conglomerate.....	(f-s)	(vk)	--
		Minor tuff breccia.....	f, h-f blocks (c-m)w	16ft	(m-6ft)?
283	Tuff at base of **Contra Costa Group** (T), near Lafayette in East Bay Hills.	Briefly seen in field.			
		Some to almost all is tuff like that in unit 282...	(f)qf?	--	(w-6ft)?
		Remainder is largely sandy tuffaceous material.....	(f)?	--	--
		Minor limestone and basalt.....	h	--	--
284	Tuff member of **Orinda Formation** (T), in area north of Livermore Valley.	Much to most is tuff.....	f-h	(k-vk)50ft+	c-vc(m-ft) / m-4ft
		Remainder is tuffaceous sandstone.....	qf	m-vk	c-vc / m-w
		and clayey sandstone, mudstone, and conglomerate, as described for unit 134.....	--	--	--
285	Tuff member of **Kirker Formation of Primmer (1964)** (T), in the monocline north of Mount Diablo.	Vitric tuff.....	f	(10-tens of ft)	(c-vc) / c(m-w)
		Tuffaceous sandstone, largely dirty.....	f	k-4ft(10-tens of ft)	(c-vc) / c(m-w)
		Tuffaceous mudstone.....	f	(10-tens of ft)	vc / (c)m
		Proportions vary from largely tuff to largely tuffaceous mudstone, commonly at least some of each constituent.			

290	**Sonoma Volcanics**, undivided (T), in area from Sonoma Mountains to east of Vallejo.	Volcanic rocks in unknown proportions. Most are probably either andesitic flows like unit 234, rhyolitic flows like unit 218, or ash-flow tuffs like unit 270.	--	--	--
291	Volcanic rocks (T) (equivalent to Quien Sabe Volcanics of Leith, 1949), near Pacheco Peak in Diablo Range, near southern boundary of region.	Not seen in field. Volcanic rocks, rhyolitic to basaltic, including intrusives and interbedded extrusive flows, agglomerates, and water-laid sedimentary rocks.	--	--	--
300	Fluvial and lacustrine deposits of Little Sulphur Creek (T), in Mayacmas Mountains near Cloverdale.	Not seen in field.			
		Largely conglomerate.....	f-h, (h)clasts(c-m)15ft+	6-25ft+	6ft+
		Some to much sandstone.....	f-h	m-100ft	?6ft+
		Some mudstone.....	f	(vk)	c-vc / ?c-m
		Minor calcite-cemented rock.....	h	--	--
301	Conglomerate in G member of Wagner (1978) of **Briones Sandstone** (T), in East Bay Hills.	Not seen in field.			
		Largely conglomerate, most carbonate-cemented....	h-f, h clasts (cm)m / same?	--	--
302	Basal conglomerate of **Monterey Group** (T), in East Bay Hills near Alamo.	Not seen in field.			
		Much conglomerate.....	(f)?, (h)clasts	to 15 ft	--
		Much(?) sandstone.....	(f)?	(k-vk)?	(m-w)?
		Minor siliceous shale.....	f-h	--	?c-m
303	Conglomerate at Point Reyes (T).	Largely conglomerate with silty sandstone matrix.	f, h-f clasts(c-m)7ft / h	(10ft+)	(m-w)10ft
		Some sandstone.....	f-s / h-f	m-20ft	(m-w)10ft
		and shale.....	s / f	n-60ft	c-vc / ?
310	San Gregorio Sandstone Member of **Purisima Formation** (T); **Santa Margarita Sandstone** (T); in Santa Cruz Mountains.	Almost all is sandstone, most(?) clean.....	f-s / f?	vk-a	(vw)?
		Minor carbonate concretions.....	h	m	m
311	Sandstone (T), on Point Reyes peninsula.	Sandstone, clean, to silty, as in unit 313.....	f-s / ?f-h	a	--
312	Sandstone (T), only near Gilroy in Santa Clara Valley area.	Largely clean sandstone.....	f-s / f	40ft+	m(w)4ft
		Some partially calcite-cemented sandstone.....	qf	k-5ft+	w-4ft
		Minor calcite-cemented sandstone.....	h	k-5ft	w-4ft
		Minor siliceous shale.....	--	--	--
313	**Laird Sandstone** (T), on Point Reyes peninsula.	Largely sandstone, clean to silty.....	f-s / f-h	(a)n-20ft+	c(m-w)20ft
		Some conglomerate at base.....	f-s, f-h clasts m / ?f-h	(vk)	c(m-w)20ft
		Minor calcite-cemented sandstone.....	h	m-20ft	(m-w)?
		and shale.....	s / f?	k	c-vc / ?

Abbreviated unit descriptions of hillside materials

Map unit (see pls. 1-6)	Geologic unit, (age), and location (see discussion in text)	*Composition* (see discussion in text; fig. 2)	Physical properties (see discussion in text): Hardness (see tables 2,3)	Bedding thickness (see table 3)	Fracture spacing (see table 3)
314	Middle sandstone unit of **Nortonville Shale** (T), at southern end of Yolo Range near Vacaville.	Largely sandstone, clean to silty.....	s-f ?(f)h	m-4ft,20-40ft+	(m-4ft)10ft
		Minor to some calcite-cemented beds and concretions.....	h	4ft+?	w-7ft
		Minor shale like unit 466.....	f	vn-m	c-vc ?
315	*Upper sandstone member of unnamed* formation (T), near southern end of Yolo Range.	*Almost all clean sandstone*.....	fas	(a), vn-m to vk	5ft-tens of ft to 12 ft
		Minor calcite-cemented concretions.....	h		
		Minor mudstone near top.....	--	vn-n	--
320	**Cierbo Sandstone** (T), only in East Bay Hills.	Almost all sandstone, clean to clayey.....	f-s same?	40ft+	c(m-w)10ft
		Minor calcite-cemented beds and concretions.....	h	m-4ft	w-4ft
321	**Temblor(?) Sandstone** (T), only in Diablo Range southeast of San Jose.	Much calcite-cemented sandstone.....	f, h blocks (m-w) h	n-k, vk	c(m)w, c w-4ft
		Much clayey sandstone.....	f f-qf	m-k, vk	--
322	**Temblor(?) Sandstone** (T), only in Santa Cruz Mountains near Mount Umunhum.	Most is tuffaceous and clayey sandstone.....	f	(m-10ft)15ft	?(c-m) ?(m-w)
		Some calcite-cemented sandstone.....	h	m-20ft to 8 ft	m-5ft
		Rare limestone and conglomerate.....	--		--
323	**Lompico Sandstone** (T); **Butano Sandstone** (T), only near Butano Ridge; in Santa Cruz Mountains.	Largely sandstone.....	f-s f-h	m-30ft	c(m-vw)
		Minor to some calcite-cemented sandstone.....	h	m-30ft	c(m-vw)
		Minor mudstone and shale.....	f-s f	(n-k)200ft	c-vc ?
		Minor conglomerate.....	--	m-30ft	--
330	E member of Wagner (1978) of **Briones Sandstone** (T), only in East Bay Hills, excluding area near Sunol Valley and Pleasanton.	Largely dirty sandstone.....	f f?	vk(30-40ft)	c-m ?
		Probably some clean sandstone.....	?s-f	--	--
		Minor to some cemented shell-breccia sandstone.....	h	to 10ft	m(w)4ft
331	D member of Wagner (1978) of **Briones Sandstone** (T), in East Bay Hills.	Almost all dirty sandstone.....	(f)h	(k-10ft)20ft	c-m (m-w)
		Minor to some calcite-cemented sandstone.....	h	k	(m-w)
		Minor conglomerate.....	--	--	--

332	Sandstone unit of **Monterey Group** (T), only at north end of East Bay Hills near Pinole.	Almost all is dirty to tuffaceous sandstone.....	f	k-10ft+	vc-c, m-w / (m-w)
		Minor diatomaceous shale,.....	f	m-k	--
		porcelaneous shale,.....	h	m-k	c-m
		and siltstone.....	f	m-k	vc / ?
333	**Oursan Sandstone** (T) of Monterey Group, only in East Bay Hills, excluding areas east of Fremont and northeast of Castro Valley.	Most is silty and clayey sandstone.....	f / f?	m-20ft+	c-vc / m-w
		Some clean sandstone.....	f	m-20ft+	c(m)w
		Minor calcite-cemented sandstone and limestone.....	h	to 5ft	(m-w)
		Minor siltstone and mudstone.....	f	m-20ft	c-vc / m-w
334	**Sobrante Sandstone** (T) of Monterey Group, only in Dublin-Castro Valley area of East Bay Hills.	Almost all dirty sandstone.....	f-fas	(a)k-vk	vc-m / m-w
		Minor grit and conglomerate.....	--	to k	--
		Minor concretions.....	h-f	(m)k	(m)
335	Tuffaceous sandstone member of **Kirker Formation of Primmer (1964)** (T), in the monocline north of Mount Diablo.	Most is dirty and tuffaceous sandstone.....	f	vn-tens of ft	c-vc / (c-m)
		Some clean sandstone.....	(s)f	m-10ft(10ft+)	(m-w)vw
		Minor to some clayey sandstone.....	f	k-5ft	c-vc / (c-m)
		Minor shale and claystone.....	f	(to k)	c-vc / ?(c-m)
		Minor cemented sandstone.....	h	to 6ft	(w)6ft
340	Glauconitic sandstone unit of sedimentary rocks near Drakes Bay (T), on Point Reyes peninsula.	Largely clean sandstone.....	s / s?	m-tens of ft	c(m-w)vw
		Some dirty sandstone.....	(f)h	(vk)	vc-m / (m-w)vw
		Some clayey sandstone.....	s	(vk)	c / m-w
		Some mudstone.....	(f)h	(vk)	vc, c-m / (c-m)w
		Rare carbonate-cemented concretions.....	h	to k	m-w
342	**Temblor(?) Sandstone** (T), only along west side of Santa Clara Valley near Los Gatos.	Probably most is clean sandstone.....	s / s?	tens of ft	m-vw
		Some to much siltstone.....	f	n-m, vk	c-m
		and clayey sandstone.....	s-f	n-m, vk?	--
		Minor porcelaneous shale, concretions, conglomerate, and volcanic rock like unit 260....	--	--	--
343	Upper sandstone member of **Domengine Sandstone** (T), only on southwest flank of Mount Diablo.	Most is clean to silty sandstone.....	f-s, f-h / same?	m-k(10-100ft+)	m(w-4ft)15ft
		Some mudstone, clayey fine-grained sandstone, and shale.....	f	m-4ft, 10-100ft+	c-vc / m-w
		Minor to some calcite-cemented sandstone beds and concretions.....	h	to 10ft	to 10ft
344	Upper part of **Domengine Sandstone** (T) (equivalent to Escobar Sandstone of Weaver, 1953), only in Pacheco syncline, west of Concord.	Largely clean sandstone.....	fas(f)qf / same?	vk-50ft, m-4ft	c(m-w)8ft
		Some shale, mudstone, and clayey sandstone.....	f	n-12ft	(c-vc)m / ?
		Minor to some calcite-cemented beds and concretions.....	h	m to 20ft	(vw)20ft

Abbreviated unit descriptions of hillside materials

Map unit (see pls. 1-6)	Geologic unit, (age), and location (see discussion in text)	Composition (see discussion in text; fig. 2)	Physical properties (see discussion in text): Hardness (see tables 2,3)	Bedding thickness (see table 3)	Fracture spacing (see table 3)
345	Divisions A and B of Clark and Woodford (1927) of **Meganos Formation** (T), near Mount Diablo.	Largely sandstone, most clean.....	s-f	vk(6ft+)150ft	(m)10ft / m-10ft
		some dirty or tuffaceous.....	f	(30-70 ft)	vc-m / ?
		Some to much mudstone, shale, and clayey sandstone.....	f	m-4ft, vk-100ft+	vc-m / ?
		Minor conglomerate at base.....	f?,(h)clasts(c-m)6ft	to 50ft	?m-10ft
		Minor calcite-cemented sandstone.....	h	to k	c(w-4ft)
350	**San Pablo Group**, undivided (T), only on southwest flank of Mount Diablo.	Largely sandstone, some to much relatively clean...	(f)qf / same?	(6-30ft)100ft+	(m-4ft)6ft
		much clayey and dirty.....	f	(6-30ft)100ft+	vc-m / m-4ft
		minor to some cemented.....	h	m-30ft	(w-4ft)8ft
		Minor to some mudstone, siltstone, and shale.....	f	(to 60ft)150ft	vc-m / m-4ft
351	**San Pablo Group**, undivided (T), only in East Bay Hills.	Not seen in field. Probably largely sandstone, dirty to clean. Some mudstone and shale.	Physical properties like those of units 381, 320, 405, and 432.		
352	**Neroly Sandstone** (T), only in area north and east of Mount Diablo.	Largely sandstone, clean to dirty.....	f	(5-30ft)75ft, k-5ft	c(m-5ft)8ft
		Some tuffaceous siltstone, sandy tuff(?), and clayey sandstone.....	f	vk, m-4ft	c-vc / c-m
		Minor calcite-cemented sandstone.....	h-qf	to 6ft	(m-w)5ft
		Minor pebble conglomerate with clean sandstone matrix.....	f, h clasts	--	(m-5ft)
353	**Cierbo Sandstone** (T), only in the monocline north of Mount Diablo.	Largely sandstone, much clean.....	s-f / s?	m-10ft, vk-90ft	(m-w)6ft
		much dirty.....	s-f / f?	m-10ft, vk-90ft	c-m / (c-m)w
		Some mudstone, siltstone, and clayey sandstone.....	f	n-6ft	vc-m / ?
		Minor conglomerate with clean sandstone matrix.....	s-f, h clasts (c)m	n-10ft	?(m-w)6ft
354	**Cierbo Sandstone** (T), only in Livermore Valley area.	Much clean sandstone.....	s-f	m(10ft+)100ft+	c(w)6ft
		Some clayey and tuffaceous sandstone.....	f	m(10ft+)100ft+	vc-m / m-4ft
		Some mudstone, sandy claystone, and shale.....	f	(vk)	vc-m / m-4ft
		Minor calcite-cemented beds and concretions.....	h-f	(to 5ft)10ft?	(m-w)8ft
		Minor conglomerate with clean sandstone matrix.....	s-f, (h)clasts(c)m	--	w-6ft
		Minor vitric tuff, lignite, porcelaneous rock, diatomaceous shale, and limestone.....	--	--	--

355	**Briones Sandstone** (T), only in hills along east side of Santa Clara Valley from Fremont south past San Jose.	Largely fairly clean silty sandstone.....	f-qf / f-h?	(10ft+)40ft+	c(m)5ft / m-5ft
		Some calcite-cemented sandstone.....	f(h) / h	(k-15ft)60ft+	(m-w)8ft
		Some mudstone and clayey sandstone.....	(f)s / f	to 40 ft+	vc-m / (m-w)
		Minor conglomerate and porcelaneous shale.....	(h)	(to 4 ft)	--
356	**Briones Sandstone**, undivided (T); upper part of **Briones Sandstone** (T); only in East Bay Hills between Dublin and Upper San Leandro Reservoir.	Not seen in field.			
		Probably largely sandstone, much fairly clean but silty.....	f-qf / f-h?	(10ft+)100ft	c(m)5ft / m-5ft
		some cemented.....	f(h) / h	(k-15ft)60ft+	(m-w)8ft
		Some to much mudstone and clayey sandstone.....	(f)s / f	(5-100ft)	vc-m / (m-w)
		Minor conglomerate largely at base, some to much cemented.....	f-h	to 4ft	(m-4ft)
357	**Briones Sandstone** (T), only in Pacheco syncline, west of Concord.	Much dirty or tuffaceous sandstone.....	(f)qf	(tens of ft)100ft+	c-m / same?
		Some clean sandstone.....	f	(tens of ft)75ft	c-m / same?
		Some mudstone, shale, siltstone, and clayey fine-grained sandstone.....	f	(5-25ft)	(c-vc)m / ?(c-m)
		Minor calcite-cemented beds and concretions.....	h-f	m-k	m-4ft
		Minor conglomerate.....	--	--	--
358	**Briones(?) Sandstone** (T), near Vallejo.	Not seen in field.			
		Probably like unit 357.	--	--	--
359	**Briones Sandstone** (T), only in East Bay Hills near San Ramon.	Briefly seen in field.	Physical properties probably like those of unit 355.		
		Largely sandstone, clean to dirty.....	--	5-75ft	--
		Minor to some cemented sandstone.....	--	to 10ft	--
		Probably some clayey rock.....	--	--	--
		Minor conglomerate.....	--	--	--
360	E member of Wagner (1978) of **Briones Sandstone** (T), only south of Livermore Valley near Sunol Valley and Pleasanton.	Largely sandstone, dirty to clean.....	(f)s / f	n-50ft+	c(m-w) / m-w
		Some to much cemented shell-breccia sandstone.....	h	(k-30ft)100ft?	m(w-5ft)10ft+
		Some subporcelaneous(?) mudstone.....	qf	to 50ft+	c-vc / c-m
		and clayey sandstone.....	f	to 50ft+	c-m / m-w
		Some conglomerate with dirty sandstone matrix.....	f-s, h clasts(c)m / same?	to 15ft	w-vw
361	Lower part of **Briones Sandstone** (T), only south of Livermore Valley near Sunol Valley.	Largely sandstone, most clean.....	f-s / f?	m-4ft, 10-50ft	c(m) / m?
		Some to much mudstone and shale, some subporcelaneous.....	(f-s)qf / (f)qf	n-k, 10-50ft	c-vc / m-w
		and clayey sandstone.....	f-s / f?	n-k, 10-50ft	c-vc / m-w
		Minor cemented shell-breccia sandstone.....	h-f	to 5ft+	(w)vw

Abbreviated unit descriptions of hillside materials

Map unit (see pls. 1-6)	Geologic unit, (age), and location (see discussion in text)	Composition (see discussion in text; fig. 2)	Physical properties (see discussion in text): Hardness (see tables 2,3)	Bedding thickness (see table 3)	Fracture spacing (see table 3)
362	Lower part of **Briones Sandstone** (T), only in area south of Livermore Valley near San Antonio Reservoir.	Briefly seen in field.			
		Largely sandstone	(f)	(vk)	(m-4ft)
		Probably some clayey rock	(f)	(vk)	c-vc / m-w
		Minor cemented shell-breccia sandstone	h	to 4ft	w-4ft
		and conglomerate	h	3-10ft	(vw)?
			In detail, physical properties probably like those of unit 361.		
363	Unnamed sandstone (T), only in Santa Clara County near Palo Alto.	Largely silty sandstone	s-f / f?	vk(tens of ft)	vc(m-w)vw / c(m-w)vw
		Minor cemented shell-breccia sandstone	h	k-4ft	c(m-w)vw
		Some(?) siltstone and clayey sandstone	--	--	--
364	**Hambre Sandstone** (T) of Monterey Group, only in East Bay Hills excluding areas east of Fremont and northeast of Castro Valley.	Largely sandstone, clean to dirty	f / (f)qf	k(10-100ft+)	vc(c-m)w / c(m-w)
		Much siltstone, mudstone, and shale	f	k-100ft+	c-vc / (m)
		Minor calcite-cemented rock	h	m-4ft	c(m-w)
365	Sandstone and mudstone near Fort Ross (T), near Sonoma County coast.	Probably largely sandstone.			
		Some mudstone and shale.	Physical properties like those of unit 378.		
366	**Temblor Sandstone** (T), only northeast of San Jose near north end of Calaveras Reservoir.	Largely sandstone	(f)	to 10ft+	c-m
		Some conglomerate	(f), h clasts c	to k	c-m
		Probably some clayey rock	(f)	(vk)?	c-vc / ?c-m
		Minor siliceous shale	h	to k	--
367	**San Ramon Sandstone** (T), only in southern Napa Range near Carneros Creek.	Not seen in field.			
		Largely sandstone	f?	(vk)	--
		Probably some clayey rock	f?	(vk)?	--
368	**Sobrante Sandstone** (T) of Monterey Group; **San Ramon Sandstone** (T); in Pacheco syncline, west of Concord.	Largely sandstone, clean to dirty or tuffaceous	s(f)qf / f-qf	m(tens of ft)100ft	(c-w)5ft / (m-w)5ft
		Some mudstone and clayey fine-grained sandstone	f	m(10-30ft+)	c-vc / c-m
		Minor cemented sandstone	h	m-k	m-w
		and conglomerate	--	--	--
369	**Vaqueros Sandstone** (T), in Santa Cruz Mountains; **Butano Sandstone** (T), in Santa Clara County and only near Kings Mountain in San Mateo County.	Largely sandstone, some calcite-cemented where fresh	f-s / f-h	m(k-10ft)tens of ft	c(m-w)6ft
		Some mudstone and shale	f-s / f	n-10ft	c-vc / ?

384	Sandstone, siltstone, and shale (T), in southern Napa Range near Carneros Creek. Mapped as Monterey Shale by Weaver (1949).	Not seen in field.			
		Largely(?) sandstone, probably most dirty or tuffaceous	f?	(a)	--
		Some(?) shale	f?	--	--
		In detail, physical properties probably like those of units 385, 332, and 406.			
385	Sandstone unit of **Monterey Group** (T), only in East Bay Hills between Dublin and Upper San Leandro Reservoir.	Not seen in field.			
		Probably largely dirty sandstone	(f)qf / f-qf	m(vk)70ft	c-m / m-w
		Some clean sandstone	(f) / f?	(vk)	m-w
		Minor(?) cemented sandstone (near Upper San Leandro Reservoir)	h?	--	--
		Minor to some clayey interbeds, probably largely clayey sandstone	f	to 70ft	(vc-m) / ?m-w
386	**Hambre Sandstone** (T) of Monterey Group, only between Niles Canyon and Calaveras Reservoir, east of Fremont.	Largely sandstone, some dirty	h-f / h	(n-k)6ft, 10-50ft+	(c-m)4ft / c(m-4ft)
		some calcite-cemented	h-f / h	?(n-6ft)	(m-5ft)
		much clayey	f / f?	(n-k)6ft,10-50ft+	(c-vc)m / ?m-w
		Some siltstone and mudstone	f / f?	?(n-k)50ft	(c-vc)m / ?m-w
387	**Hambre Sandstone** (T) of Monterey Group, only northeast of Castro Valley in East Bay Hills.	Not seen in field.			
		Largely sandstone, most dirty	f	(vk-a)	?vc-m / ?m-w
		Minor to some shale	f	(n-k)	?vc-m / ?
388	**Oursan Sandstone** (T) of Monterey Group, only northeast of Castro Valley in East Bay Hills.	Largely dirty to clayey sandstone	(f) / (f-qf)	k-4ft(10-50ft)	(c-vc) / m-w
		Some calcite-cemented sandstone	(f)h / h	(to 30ft)50ft+	m-w
		Minor to some shale and siliceous shale	(f)	?(n-m)vk	(c-vc) / ?
389	**Oursan Sandstone** (T) of Monterey Group, only between Niles Canyon and Calaveras Reservoir, east of Fremont.	Largely clayey fine-grained sandstone	(f),h-qf blocks (m-w) / f-h	(vk-50ft)	(c-cv)m / c(m-w)5ft
		Some dirty sandstone	f	n(m-k)20ft+	(c-m)
		Minor to some calcite-cemented sandstone	h	(m-k)	m-w
		Minor to some mudstone	(f)s / f	n(m-k)20ft+	(c-vc) / ?m-w
		Minor pebble conglomerate southeast of Sunol Valley	--	--	--
390	Sandstone member of **Claremont Shale** (T), Monterey Group, in East Bay Hills.	Largely dirty sandstone	f-s / f	10ft+	c-m / c(m-w)
		Some calcite-cemented sandstone	h	m-6ft	c-4ft
		Some shale	f	m-6ft	c-vc / ?
		and porcelaneous shale	h	m-6ft	c-m
		Minor altered diabase dikes	?f-s	--	--

Abbreviated unit descriptions of hillside materials

Map unit (see pls. 1-6)	Geologic unit, (age), and location (see discussion in text)	Composition (see discussion in text; fig. 2)	Physical properties (see discussion in text): Hardness (see tables 2,3)	Bedding thickness (see table 3)	Fracture spacing (see table 3)
378	Strata of German Rancho (T), near Sonoma County coast.	Largely sandstone	(f)h / (h)f	m-30ft+	c-m, w-15ft
		Some mudstone	f?	m-30ft+	c-vc / ?
		Minor to some conglomerate	--	k-100ft+	--
		Minor to some calcite-cemented sandstone	h	m-30ft?	--
379	Undifferentiated sandstone, mudstone, and conglomerate (TK), near Sonoma County coast.	Largely sandstone	s / f-h	(m-vk)	c-m
		Some(?) mudstone	f?	(n-vk)	c-vc / ?
		Some(?) conglomerate	s, s-h clasts / ?	--	c-m
380	**Purisima Formation**, undivided (T); Tunitas Sandstone Member and Tahana Member of **Purisima Formation** (T); unnamed sandstone (T); in San Mateo County part of Santa Cruz Mountains.	Most is clayey or tuffaceous fine-grained sandstone and siltstone	f-s / f	(a-vk)	vc-m / m-vw
		Some silty mudstone	f-s / f	--	c-vc / ?
		Minor clean sandstone	?f-s	m-vk	--
		and porcelaneous rock	f-h	--	c / c?
381	**Neroly Sandstone** (T), only in East Bay Hills (excluding area north of Alamo) and in southern Napa Range near Carneros Creek.	Largely sandstone, much medium- to coarse-grained, largely dirty, some clean	(f)s / (f)h	10-100ft+, n-4ft	c(m-w)4ft
		much fine-grained, clayey	(f)s / f	10-100ft+, n-4ft	c-m / m-w
		Some mudstone, siltstone, and shale	f	(n-4ft)10ft+	c-vc / c-m
		Minor calcite-cemented beds and concretions	f-s / h	to k	w
382	G and I members of Wagner (1978) of **Briones Sandstone** (T), in East Bay Hills.	Largely sandstone, much tuffaceous to clay coated	f-h / same?	k-30ft	m(w-10ft)20ft
		much dirty	(f)s / f?	vn-m, 5-100ft	vc-m / ?
		minor calcite-cemented beds and concretions	h	to k	m-w
		Some shale interbeds	(f)s / f?	vn-m	vc-m / ?
		Minor conglomerate	?f-h,h clasts(c)m	m-k	?m(w-10ft)20ft
		Rare limestone, some with chert	h	--	--
383	F member of Wagner (1978) of **Briones Sandstone** (T), in East Bay Hills.	Probably largely dirty sandstone	f-h / ?	(5-7ft)	(c-m)w
		Some to much sandy mudstone and shale	f	(k)	c-vc / ?
		Minor calcite-cemented beds and concretions	h	to k	(m)w

370	**Butano Sandstone** (T), only near Sky Londa in Santa Cruz Mountains.	Largely sandstone	f-s / f	(n-m)100ft	(c)w
		Some to much mudstone and shale	f-s / f	(vn-m)	vc / c-m
		Minor calcite-cemented sandstone	h	k-vk	m-w
371	**Markley(?) Formation** (T), only in East Bay Hills near Oakland.	Not seen in field.			
		Probably largely sandstone	(f)h	?(k-8ft)25ft+	c(m-w)6ft
		Some siltstone, mudstone, and shale	(f)s / f	?(n-5ft)	c-vc / m-w
372	**Markley Formation** (T), only in Potrero Hills, northwest of Montezuma Hills.	Not seen in field.	Physical properties probably like those of unit 373.		
		Largely sandstone, silty to clean	--	(5-20ft)50ft	--
		Some to much clayey rock	--	(5-20ft)100ft	--
		Some conglomerate	f?, h clasts (c)m	--	--
		Minor cemented rock	--	--	--
373	Lower sandstone member of **Markley Formation** (T), north of Mount Diablo; **Markley Formation**, undivided (T), only near Concord.	Largely sandstone	(f)s	(k-6ft)100ft	c(m-4ft)10ft / (m-4ft)10ft
		Some to much shale and mudstone	f	(n-6ft)20ft+	c-vc / (m)w
		Some concretions	(h)f	to 6ft+	m-6ft
374	Shale and sandstone (T), in Santa Teresa Hills south of San Jose.	Largely sandstone, clean to dirty, much calcite-cemented where fresh	(f)h / f-h	m(10ft+)	vc(m-w)4ft
		Some mudstone and shale	f	n-10ft+	vc-m / ?
		Minor limestone	(h)	(3-5ft)25ft	(m)w
		and volcanic rocks like unit 260	--	--	--
375	**Tolman Formation of Hall (1958)** (T), at mouth of Niles Canyon near Fremont.	Not seen in field.			
		Probably largely sandstone, clean to dirty	?f-s / f?	(20-200ft)	--
		Some(?) calcite-cemented bioclastic sandstone	h	to 10ft?	--
		Some conglomerate	--	--	--
		Probably some clayey rock	--	(20-200ft)	--
376	**Domengine Sandstone** (T) (equivalent to combined Muir and Escobar Sandstones of Weaver, 1953), only on east limb of Pacheco syncline, west of Concord.	Largely sandstone	(f)s / f	(m-6ft)tens of ft	(m-w)vw
		Some mudstone, clayey sandstone, and shale	(f)s / f	(n-6ft)50ft	(c-vc)? / (m-w)?
		Minor calcite-cemented beds and concretions	h	(to 4ft)20ft	(w-6ft)20ft
377	Division D of Clark and Woodford (1927) of **Meganos Formation** (T), near Mount Diablo.	Largely sandstone, clean to dirty	(s-f)qf	(k-vk)150ft	c(m-w)10ft / (m-w)10ft
		Some mudstone, shale, siltstone, and clayey sandstone	f	(m-k)vk	vc-m / ?
		Minor calcite-cemented beds and concretions	h	(to k)4ft	(m-w)4ft
		Minor conglomerate at base	--	--	--

Abbreviated unit descriptions of hillside materials

Map unit (see pls. 1-6)	Geologic unit, (age), and location (see discussion in text)	Composition (see discussion in text; fig. 2)	Physical properties (see discussion in text): Hardness (see tables 2,3)	Bedding thickness (see table 3)	Fracture spacing (see table 3)
391	**Sobrante Sandstone** (T) (restricted in sense of Lutz, 1951) of Monterey Group, only near southwest flank of Mount Diablo.	Much to most is sandstone, much dirty or tuffaceous	s-f / f?	(10-100ft)	c(m-4ft)6ft
		much clayey	(f)	10-60ft+	vc-m / c-w
		Minor to some mudstone	f	10-60ft+	vc-m / c-w
		Minor to some conglomerate	f, (h)f clasts c-m	(10-100ft)	w-4ft
		Minor to some cemented shell-reef sandstone	h	m-4ft	(m-4ft)8ft
392	**Sobrante Sandstone** (T) of Monterey Group, only in East Bay Hills near Pinole Ridge and Oursan Ridge.	Largely sandstone, clayey to silty	(f)s / f	k(10-50ft)	c / m-w
		Some mudstone and shale	(f)s / f	n-4ft	c-vc / ?m-w
		Minor tuffaceous sandstone and calcite-cemented sandstone	h	m-4ft	m-w
393	**Temblor(?) Sandstone** (T), only in Santa Cruz Mountains between Gilroy and Loma Prieta.	Largely sandstone, most somewhat dirty, some clean	s(f)qf / (f)?	vk-10ft+	(c-w)10ft+ / m(w)5ft
		Minor to some mudstone	f	n-vk	c-vc / ?m-w
		Minor cemented sandstone	h	--	w-4ft
		conglomerate, porcelaneous shale, and limestone	--	--	--
394	**San Ramon Sandstone** (T); sandstone member of **Kirker Formation of Primmer (1964)** (T); only in East Bay Hills near Briones Reservoir.	Most is dirty and tuffaceous sandstone	f-h	n-10ft+	c(m)w / c(m-w)
		Some mudstone and siltstone	(f)s / f	(n-5ft)25ft	vc-m / ?c-w
		Minor calcite-cemented sandstone	h	(m)k	m-w
		and conglomerate	--	--	--
399	Sandstone (T), near San Antonio Creek and on Burdell Mountain in Marin highlands.	Not seen in field at Burdell Mountain.			
		Much to most sandstone	f	n-15ft	c-w / m(w)
		Some to much mudstone and siltstone	f	n-vk	vc / vc?
		Minor calcite-cemented sandstone	h	--	m(w)
400	**Neroly Sandstone** (T), only in Livermore Valley area.	Much sandstone, clean to dirty	s-f / s(f)	k-6ft, 6-60ft	(m-w)4ft
		Much clayey sandstone, mudstone, and siltstone	f / f?	k-6ft, 6-60ft	(c-vc)m / ?m-w
		Minor to locally some calcite-cemented rock	h	to 8ft	(m-w)4ft
		and porcelaneous mudstone	h-f	--	vc-m
		Minor conglomerate,	f-s, h clasts (c-m)w	k-vk	w-4ft
		limestone, and tuff	--	--	--

401	**Neroly Sandstone** (T), only along southwest flank of Mount Diablo.	Much to most is clayey and tuffaceous sandstone....	s(f)qf / f-qf	n(6-tens of ft)100ft+	vc-m / (m-w)5ft
		Some mudstone and siltstone.....	f	n(6-tens of ft)100ft+	c-vc / ?
		Minor to locally some clean sandstone.....	f-s / same?	(10-tens of ft)	c(m)w / (m)w
		Minor to locally some conglomerate.....	(f)s, h-f clasts(c-m)w / ?f, (h) clasts	to 120ft+	--
		Minor to locally some calcite-cemented rock.....	h-f / h-qf	m-40ft	m(w-4ft)8ft
		Minor to locally some porcelaneous mudstone.....	h-f	(6-20ft)	c-vc / ?
		Minor lithic tuff.....	f?	4-20ft	--
402	**Neroly Sandstone** (T), only near San Ramon Creek, west of Mount Diablo.	Much to most is sandstone, most clean, some tuffaceous.....	f / f?	m-k(6-60ft)	(m-w)4ft
		Much mudstone, siltstone, and high-matrix fine-grained sandstone.....	f	m-k(10-40ft)200ft	vc(c)m / (m)w
		Minor calcite-cemented shell breccia.....	h	k-4ft	(w)8ft
		and conglomerate.....	f, h clasts (c)	(to k)vk	--
403	**Neroly Sandstone** (T), only near southern end of Yolo Range.	Proportions uncertain. Probably some to much clean sandstone.....	f	(k-15ft)40ft	(c-m)w / m-w
		Much to most tuffaceous siltstone.....	f	(n-20ft)60ft+	c-vc / m
		Minor cemented rock.....	h	--	m-w
404	**Briones Sandstone** (T), only in East Bay Hills between Pleasant Hill and Las Trampas Ridge.	Not seen in field. Much(?) sandstone, clean to dirty. Much(?) clayey rock.	Physical properties probably like those of unit 405.		
405	Upper part of **Briones Sandstone** (T), in East Bay Hills.	Much sandstone, clean to dirty.....	s(f)qf / (f)qf	m-10ft, 10-50ft+	c(m-w)5ft
		Much mudstone, siltstone, shale, and clayey fine-grained sandstone.....	s(f) / f	m-10ft, 10-100ft+	vc-m / m-w
		Minor calcite-cemented beds and concretions.....	h	(to k)8ft	m(w)
406	Sandstone unit of **Monterey Group** (T), only in East Bay Hills north of Alamo.	Much is sandstone, most dirty.....	f / f?	m-k, 10-100ft	c-m / m-w
		much clean.....	f / f?	m-k, 10-100ft	m-w
		Much sandy mudstone.....	f	m-k, 10-100ft	c-vc / ?
		Minor calcite-cemented shell breccia.....	h	to k	m-w
407	Unnamed unit (T), in East Bay Hills near Pinole.	Much to most is clean sandstone.....	s-f / f?	k-10ft+	m
		Much shale, siltstone, and clayey fine-grained sandstone.....	f	m-4ft	c-vc / ?
		Minor calcite-cemented sandstone.....	h	to k	w-4ft

Abbreviated unit descriptions of hillside materials

Map unit (see pls. 1-6)	Geologic unit, (age), and location (see discussion in text)	Composition (see discussion in text; fig. 2)	Physical properties (see discussion in text): Hardness (see tables 2,3)	Bedding thickness (see table 3)	Fracture spacing (see table 3)
408	**Sobrante(?) Sandstone** (T) of Monterey Group, only in East Bay Hills near Oakland.	Some to much is dirty sandstone.....	f	(vk)50ft+	c-vc / m-w
		Much siltstone and mudstone.....	f	(vk)	c-vc / m-w
		Minor cemented sandstone,.....	h	m-k, vk	c-10ft
		limestone, siliceous shale, and altered diabase dikes.....	--	--	--
409	**San Ramon Sandstone** (T), only between Alamo and Walnut Creek, southwest of Concord.	Much sandstone, largely dirty.....	f-s / (f)qf?	k-6ft, vk-30ft+	(c-m)w / (m-w)4ft
		Much shale, mudstone, and claystone.....	f	n-5ft, vk	c-vc / ?
		Minor to some calcite-cemented sandstone.....	h	to k	to w
		Minor siliceous shale.....	qf-h	20ft	vc-m
410	**Markley Formation** (T), only in area between Vallejo, Montezuma Hills, and Yolo Range, excluding Potrero Hills.	Much sandstone, largely silty.....	f-s / f?	m-10ft, 10-40ft	m(vw)
		Much siltstone, clayey fine-grained sandstone, mudstone, and shale.....	f	m-4ft, 10ft+	vc-m / ?
		Minor calcite-cemented concretions.....	h	(k)6ft	w-6ft
		Some(?) chalky siliceous shale near Jameson Canyon.	--	--	--
411	**Markley(?) Formation** (T), only on east side of East Bay Hills near Walnut Creek.	Not seen in field.			
		Probably most is fine-grained sandstone, shaly sandstone, and shale.....	--	--	--
		Minor(?) calcite-cemented sandstone.....	h	vn-n?, vk	?(m-w)
412	Upper sandstone member of **Markley Formation** (T), in the monocline north of Mount Diablo.	Much(?) sandstone, largely clean.....	(s)f / f-s?	(5-70ft)	c-m
		Much(?) shale, mudstone, siltstone, and clayey sandstone.....	f	n-k, tens of ft	c-vc / ?
		Minor calcite-cemented beds and concretions.....	h	to 4ft	w-4ft
		and tuff.....	--	--	--
413	Sandstone member of **Nortonville Shale** (T), in Pacheco syncline, west of Concord.	Much sandstone, clean to dirty.....	s-f	10-20ft	c(m-w)4ft
		Much shale.....	f	10-20ft	c-vc / ?
414	**Domengine Sandstone** (T), only in area north and east of Mount Diablo, excluding Pacheco syncline.	Largely clean sandstone.....	f-s	4-100ft+	c(m-4ft)7ft
		Some to much siltstone, mudstone, shale, and clayey sandstone.....	s(f)h	n-150ft	vc-m / ?m-w
		Minor cemented sandstone,.....	h	to 10ft+	m-10ft
		lignite,.....	f	to 5ft	--
		and conglomerate.....	f-s,h-f clasts	(c-m)4ft (to 20ft)50ft	?a-vw

415	**Domengine Sandstone** (T), only in area north and east of Vallejo, excluding Potrero Hills and area of exposure near Napa.	Much to most is sandstone, largely clean.....	f-s	(10-100ft)	c-w
		Much shale and mudstone.....	f	n-100ft	?vc-m / ?
		Some cemented sandstone.....	h	k-10ft	m-5ft+
416	**Domengine Sandstone** (T), only in Potrero Hills, northwest of Montezuma Hills.	Not seen in field, probably like unit 415.	--	--	--
417	**Domengine Sandstone** (T), only near Napa.	Much sandstone.....	(h-f)s / (h)	(4-10ft+)	c(m-w)8ft
		some calcite-cemented.....	h	--	?(m-w)
		Much mudstone.....	f	n-10ft+	c-vc / m
418	Divisions D and E of Clark and Woodford (1927) of **Meganos Formation** (T), east of Mount Diablo.	Not seen in field. Like units 377 and 444 combined.			
		Probably some to much mudstone and shale.....	f	--	vc-c / ?m-w
		Some siltstone to high-matrix sandstone.....	f	--	vc-m / m
		Some clean to dirty sandstone.....	(s-f)qf	--	c(m-w)10ft / (m-w)10ft
		Minor calcite-cemented sandstone.....	h	--	(m-w)4ft
419	Sandstone unit in division C of Clark and Woodford (1927) of **Meganos Formation** (T), only in and near Pacheco syncline, west of Concord.	Some clean tuffaceous sandstone.....	f-s / same?	40-80ft	m-w
		Some high-matrix fine-grained sandstone.....	f	n-k, 150ft+	(vc-c)m / c-m
		Some shale and mudstone.....	f	(n-10ft)	c-vc / c-m
		Minor cemented sandstone.....	h	to 4ft	m-4ft
420	Divisions A, B, and C of Clark and Woodford (1927) of **Meganos Formation** (T), east of Mount Diablo.	Not seen in field. Like units 345 and 445 combined.			
		Much(?) sandstone like unit 345.			
		Much(?) clayey rock like unit 445.			
		Minor(?) siliceous shale as in unit 445.	Physical properties like those of units 345 and 445.		
421	**Butano(?) Sandstone** (T), in San Mateo County foothills of Santa Cruz Mountains.	Much to most is sandstone.....	f-s / f	n(10ft+)30ft	m-w
		Some to much mudstone, siltstone, and shale.....	f-s / f	n-vk	c-vc / ?
		Minor calcite-cemented sandstone.....	h	to vk	?(m-w)
422	**Tesla Formation** (T), east of Livermore Valley.	Much clean sandstone.....	fas	n(6-50ft)100ft	(m-w)6ft
		Much mudstone and shale.....	f	vn(6-50ft)100ft	vc(c)m / m-w
		Minor clayey sandstone.....	f	n(6-50ft)100ft	(c)m / ?
		Minor concretions.....	(h)f	(n-k)10ft	(m-w)4ft
		and lignite.....	f	to 6ft	--
423	Sandstone (T), only in Santa Cruz Mountains between Lexington Reservoir and Pajaro River.	Much sandstone.....	(f-qf)h / ?	m-k, vk-15ft+	(m-w)10ft
		Much mudstone, siltstone, and clayey fine-grained sandstone.....	f	n-k, vk	c-vc / (m)w

Abbreviated unit descriptions of hillside materials

Map unit (see pls. 1-6)	Geologic unit, (age), and location (see discussion in text)	Composition (see discussion in text; fig. 2)	Physical properties (see discussion in text): Hardness (see tables 2,3)	Bedding thickness (see table 3)	Fracture spacing (see table 3)
424	**Martinez Formation** (T), only in area east of Clayton, north of Mount Diablo.	Much sandstone, largely dirty.....	f	(m)6ft, 10-50ft	c-m / w
		Much mudstone, siltstone, and shale.....	f	m(k-4ft), 10ft+	vc-m / m
		Minor calcite-cemented sandstone and limestone.....	h	(n-k)4ft	(m-w)4ft
		Minor conglomerate at base.....	f, h clasts c	to 5ft	--
425	Lower glauconitic sandstone member of **Martinez Formation** (T), only near Carquinez Strait, southeast of Vallejo.	Much sandstone, largely clean.....	h-f / h?	6-30ft(100ft+)	(m-5ft)10ft
		Much siltstone, mudstone, and clayey fine-grained sandstone.....	f	10-50ft+	(c) / m?
		Minor calcite-cemented concretions.....	h	to 3ft	m-w
426	Lower glauconitic sandstone member of **Martinez Formation** (T), only in area west of Concord.	Much sandstone, largely dirty.....	(f)s / f?	n-k, (6-30ft)100ft	(m-w)6ft
		and conglomerate with dirty sandstone matrix.....	f, h clasts c-m	5-20ft	vw
		Much mudstone, siltstone, and shale.....	f	n-vk	vc-m / m-5ft
		Minor to some calcite-cemented rock.....	h	k-5ft	w-5ft
430	Siltstone and mudstone unit of sedimentary rocks near Drakes Bay (T), on Point Reyes peninsula.	Most is siltstone and mudstone.....	s(f)h / (f)h	m(vk-20ft+)	c-vc / c(m)w
		Some claystone.....	s / f	(vk-20ft+)	c-vc / c(m)w
		Some dirty sandstone.....	s / f?	?(vk-20ft+)	c(m)w? / c(m)w
		Minor calcite-cemented concretions.....	h	m-k	(m-w)
431	Siltstone member of **Neroly Sandstone** (T), in the monocline north of Mount Diablo.	Largely siltstone, probably tuffaceous.....	f	--	c-vc / ?c-m
		Probably some dirty to clayey sandstone.....	f	--	c(m-5ft)
		and sandy tuff.....	f?	--	?c-vc / ?c-m
		Minor clean sandstone.....	?s-f	--	--
432	Lower part of **Briones Sandstone** (T), only in East Bay Hills.	Most(?) is sandy claystone, mudstone, and siltstone.....	f	(vk)200ft+	c-vc / m
		Some sandstone.....	f-qf	vk-5ft, 20-100ft	vc(m-w) / m-w
		Minor calcite-cemented sandstone beds.....	h	to 5ft	m-w
433	Clay shale unit of **Monterey Group** (T), in Diablo Range east of San Jose.	Most is mudstone, siltstone, and clayey sandstone.....	f	--	c-vc / ?m-w
		Some cemented sandstone.....	(h)qf / h	--	c-m
		and porcelaneous shale and mudstone.....	h-f	--	c

435	**Markley Formation** (T), only between Briones Reservoir and Pinole Creek in East Bay Hills.	Most is mudstone and shale	f	vn-5ft+	c-vc / ?
		Some sandstone, largely dirty	(f)h	n-4ft, 10-20ft	vc-4ft / c-4ft
		Minor cemented sandstone	h	to m	c-m
436	Sidney siltstone unit (T), probably Sidney Flat Shale Member of Fulmer (1964) of **Markley Formation**; only in Pacheco syncline, west of Concord.	Most to almost all is shale and mudstone	f	(vk)	vc-m / m-w
		Minor to some clayey and tuffaceous sandstone	f-s / f?	m-8ft	c-m / m
		Rare cemented sandstone	h	m-4ft	m-w
438	**Nortonville Shale** (T), only in and near the monocline north of Mount Diablo.	Most is shale and mudstone	f	m-vk	c-vc / ?m-w
		Some sandstone, clean to clayey	s-f / f	n-k, vk-85ft	c-w / m-w
		Minor to some siliceous shale	h	(n-m)	?c-m
		Minor cemented sandstone and limestone	h	(to k)30ft+	(m-w)6ft
439	**Nortonville Shale** (T), only in area between Vallejo and Yolo Range, excluding Potrero Hills.	Largely shale	f	(vk)	c-vc / ?
		Some to much sandstone, clean to silty	s-f / ?(f)h	m-4ft,20-40ft+	(m-4ft)10ft
		Minor siltstone and bentonite	--	--	--
440	**Nortonville Shale** (T), only in Potrero Hills, northwest of Montezuma Hills.	Not seen in field.			
		Most is shale and siltstone	f	(vk)	c-vc / ?
		Some to much sandstone	(f)	?n-k,vk-100ft+	(m-4ft)10ft
		much(?) calcite-cemented	h-qf	to 4ft	?(m-4ft)10ft
		Probably minor bentonite	--	to m	--
441	Lower part of **Domengine Sandstone** (T) (equivalent to Muir Sandstone of Weaver, 1953), only in Pacheco syncline, west of Concord.	Most is mudstone with some sandy claystone and shale	s-f / f	(n-k)20ft+	c-vc / ?
		Some clean to silty sandstone	f-s / (f)qf	(n-6ft)30ft	c-w
		some calcite-cemented	h	(m-k)5ft	(m-w)5ft
442	Lower siltstone and claystone member of **Domengine Sandstone** (T), only along southwest flank of Mount Diablo.	Largely clayey rock, most ranging from mudstone to muddy fine-grained sandstone, some shale	f-qf	n-m(vk)	c-vc / m-w
		Minor to some clean sandstone	f	(m-k)20ft	(m-w)
		and cemented sandstone	h	(m-k)	(m-w)8ft
		Minor conglomerate at base	f, (h) clasts (c)m	to 5ft+	?(m-w)
443	Lower siltstone and claystone member and white sandstone unit of **Domengine Sandstone** (T), along southwest flank of Mount Diablo.	Largely clayey rock, most ranging from mudstone to muddy fine-grained sandstone, some shale	f-qf	n-m(vk)	c-vc / m-w
		Minor to some sandstone, most clean	(f)s / f?	m-k, tens of ft	(m-w)4ft
		and cemented sandstone	h	m-k, vk	m-vw
444	Division E of Clark and Woodford (1927) of **Meganos Formation** (T), near Mount Diablo.	Most is mudstone and shale	f	(vk)	vc-c / ?m-w
		Some to much siltstone and high-matrix sandstone	f	to 100ft	vc-m / m
		Minor clean sandstone	s / ?	to k	?a, c-w
		Rare calcite-cemented concretions and beds	h	m	c-w

Abbreviated unit descriptions of hillside materials

Map unit (see pls. 1-6)	Geologic unit, (age), and location (see discussion in text)	Composition (see discussion in text; fig. 2)	Physical properties (see discussion in text): Hardness (see tables 2,3)	Bedding thickness (see table 3)	Fracture spacing (see table 3)
445	Division C of Clark and Woodford (1927) of **Meganos Formation** (T), only north and east of Mount Diablo.	Largely shale	f	(vk)	vc-c / ?m-w
		Minor to some siliceous shale	?f-h	--	?c-m
		Some sandstone, much clayey	f-s / f?	m-5ft+	--
		much calcite-cemented	h	(to m)	(m-w)
446	Sandstone unit in Division C of Clark and Woodford (1927) of **Meganos Formation** (T), only north of Mount Diablo.	Not seen in field; proportions clear on aerial photographs.			
		Largely shale as in unit 445	f	(vk)	vc-c / ?m-w
		Probably minor to some siliceous shale as in unit 445	--	--	--
		Much sandstone, probably like that in units 345, 377, and 445	--	m-5ft(30-100ft)	--
		some cemented	h	--	--
448	Unnamed formation (T), only in Potrero Hills, northwest of Montezuma Hills.	Not seen in field.			
		Largely shale	f?	(vk)	c-vc / ?
		Some sandstone	?f-s	(to k)	--
		Rare concretions	h	(to k)	--
449	**Martinez Formation**, undivided (T), only in area west of Concord.	Not seen in field.			
		Most is mudstone, siltstone, clayey sandstone, and shale.			
		Some sandstone.			
		Minor calcite-cemented rock.	Physical properties like those of units 425, 426, 451 and 474.		
450	**Martinez Formation** (T), only near Potrero Hills, northwest of Montezuma Hills.	Most(?) is claystone, shale, mudstone, and clayey sandstone	f	(k-100ft)	c-vc / ?
		Some(?) sandstone, largely dirty, some clean	f	(k-100ft)	(c-m)w / same?
		Minor to same calcite-cemented sandstone	h	to k+	?m-w
		Minor pebble conglomerate	--	--	--
451	Upper siltstone and shale member of **Martinez Formation** (T), only in area west of Concord.	Most is mudstone, siltstone, clayey sandstone, and lesser shale	(f)s / f	n-k(vk)	(c-vc)m / m-4ft
		Some sandstone, largely dirty	f	n(m-5ft)75ft	(c-m)w
		Minor calcite-cemented sandstone	h	k-4ft	(m-w)4ft
452	Lower glauconitic sandstone member of **Martinez Formation** (T), only at north end of East Bay Hills near Crockett.	Briefly seen in field.			
		Largely siltstone, mudstone, and clayey fine-grained sandstone	f	10-50ft	(c) / m?
		Some(?) sandstone, largely clean	h-f / h?	6-30ft	(m-5ft)

453	Unnamed unit (TK), in Santa Cruz Mountains near Mount Madonna and Sierra Azul.	Briefly seen in field.			
		Most(?) is shale and mudstone.....	f	(vk)	c-vc / c-w
		Minor to some(?) dirty sandstone and conglomerate..	f	n-4ft+	c-4ft
		Rare cemented sandstone beds and concretions.....	h	n-4ft+	c-4ft
460	Lobitos Mudstone Member of **Purisima Formation** (T); **Lambert Shale and San Lorenzo Formation**, undivided (T); in San Mateo County. **San Lorenzo Formation**, undivided (T); Rices Mudstone Member of **San Lorenzo Formation** (T); in San Mateo and Santa Clara Counties.	Almost all is mudstone and siltstone with some shale.....	f-s / f?	vk-a	(c-vc)m / m-w
		Minor sandstone.....	f?	--	--
461	Twobar Shale Member of **San Lorenzo Formation** (T); shale member of **Butano Sandstone** (T); shale near Palo Alto (K); in San Mateo County.	Almost all is shale with some mudstone.....	s-f / f?	(vk)?	c-vc / ?
		Minor sandstone.....	--	--	--
465	**Nortonville Shale** (T), only in Pacheco syncline, west of Concord.	Most is shale and mudstone.....	f	(vk)	c-vc / m-w
		Minor sandstone.....	s-f / f	(n-4ft)25ft	c(m-w)
		Rare calcite-cemented sandstone.....	h	?n-4ft	w
		Rare porcelaneous shale.....	?f-h	--	?c-m
466	Upper shale unit of **Nortonville Shale** (T), in area at southern end of Yolo Range near Vacaville.	Almost all shale.....	f	(vk)	c-vc / ?
		Minor siltstone, sandstone, and bentonite.....	--	--	--
467	Lower shale unit of **Nortonville Shale** (T), in area at southern end of Yolo Range near Vacaville.	Almost all shale.....	f	(vk)	c-vc / ?
		Minor siltstone, sandstone, and bentonite.....	--	--	--
468	Division C of Clark and Woodford (1927) of **Meganos Formation** (T), only in and near Pacheco syncline, west of Concord.	Almost all is shale and mudstone, much of each.....	f	m(tens of ft)	(vc-c)m / m-w
		Minor sandstone.....	(f)qf	n(m-k)6ft+	c-m / c(m)w
		Rare limestone.....	h	m	m
469	Division C of Clark and Woodford (1927) of **Meganos Formation** (T), only at north end of East Bay Hills near Crockett.	Almost all is mudstone with some shale.....	f-s / f	(vk)	vc(c)m / ?c-m
		Minor clayey sandstone.....	qf	m-k	?c-m / c-m
		and cemented rock.....	h	n-m	c-m
470	**Vacaville Shale of Merriam and Turner (1937)** (T), west of Napa.	Not seen in field.			
		Largely shale.....	?f-s / f	?(vk)	c-vc / ?c-m
		Some sandy mudstone.....	?f-s / f	?(vk)	?vc-m / ?c-m
471	**Capay Formation** (T), only north of Vacaville along east side of Yolo Range.	Almost all clayey mudstone.....	f	(vk-a)	(vc) / ?
		Minor sandstone.....	f	3ft+	c-m

Abbreviated unit descriptions of hillside materials

Map unit (see pls. 1-6)	Geologic unit, (age), and location (see discussion in text)	Composition (see discussion in text; fig. 2)	Physical properties (see discussion in text): Hardness (see tables 2,3)	Bedding thickness (see table 3)	Fracture spacing (see table 3)
472	**Capay Formation** (T), only in Potrero Hills, northwest of Montezuma Hills.	Not seen in field.			
		Largely shale	f?	(vk)	c-vc / ?
		Some cherty shale	?f-h	--	vc-m
		and sandy mudstone	f?	--	vc-c / ?
		Minor cemented sandstone, bentonite, and limonitic phosphatic(?) interbeds	--	--	--
473	Unnamed formation (T), only along east side of Yolo Range north of Vacaville.	Almost all(?) is sandy mudstone with some shale	f	vn-m(vk)	c-vc / ?
		Minor to possibly some sandstone	?f-s / ?f	vn-m	--
474	Upper siltstone and shale member of **Martinez Formation** (T), only near Carquinez Strait, southeast of Vallejo.	Almost all is siltstone, mudstone, and clayey fine-grained sandstone	(f)qf	vk-a	(c)m / ?
		Rare cemented sandstone and concretions	h	to k	m-w
500	Pomponio Mudstone Member of **Purisima Formation** (T); **Monterey Group** (T); **Santa Cruz Mudstone** (T); **Lambert Shale** (T); in San Mateo County part of Santa Cruz Mountains.	Most is porcelaneous shale and mudstone	h-f	m-vk	(c-vc)m
		Some chert	h	?(n-m)	(c-vc)m
		Some nonsiliceous mudstone	f-s / f	m-vk	c-vc / ?
		Minor sandstone	f-h	m-vk	(c-m)
501	**Monterey Group** (T), only in foothills of Santa Cruz Mountains near Los Gatos.	Most is porcelaneous shale and siltstone	f	n-m, vk	c-m
		Minor porcelanite	h	n-m, vk	c-m
		Minor to some nonsiliceous siltstone and shale	f	vn-m	c-m / ?
		Minor to some clean sandstone	s / s?	m-20ft	c-vw
		Minor bentonite or ash	s-f	(m)k	--
		Rare calcite-cemented sandstone	h	to 4ft	m-4ft
503	Shale unit of **Monterey Group** (T), only in area north of Castro Valley in East Bay Hills.	Not seen in field. Much(?) subporcelaneous shale or mudstone. Some(?) porcelaneous shale or mudstone. Some to much(?) nonsiliceous shale or mudstone. Minor to some(?) sandstone.	Physical properties probably like those of units 504 and 507.		
504	Shale unit of **Monterey Group** (T), only near eastern margin of East Bay Hills north of Alamo.	Most is subporcelaneous to porcelaneous mudstone	f(qf)h	n(vk)	(c-vc)m / c-m
		Probably some nonsiliceous mudstone	f	n(vk)	c-vc / c-m
		Some dirty sandstone	(f)s / f	n-6ft+	?(m)

506	**Claremont Shale** (T) of Monterey Group, only near Oakland in East Bay Hills.	Most is porcelanite with some chert.....	h	(n-m)k-4ft+	vc-c
		repetitively interbedded with shale.....	f (f)qf	(n)m	vc-c
		Minor to some dirty to tuffaceous sandstone.....	f-s f	(vk)80ft+	c c-m
		Minor to some shale and mudstone.....	f f-qf	(to 15ft)300ft?	c-vc c-w
		Rare limestone and cemented sandstone.....	h	m-4ft	(c-w)4ft
		and altered diabase dikes.....	s-h	--	--
507	**Claremont Shale** (T) of Monterey Group, only in area northeast of Castro Valley in East Bay Hills.	Largely porcelaneous shale.....	h-f	n-m, k-vk	vc(c)m
		Minor to some chert.....	h	(n-m)	vc(c)m
		Some repetitive shale interbeds.....	f	vn-m	c-vc
		Some to much sandstone, largely dirty.....	f	(vk)15ft+	(vc-m)w (m)w
		Minor diatomaceous shale.....	f	(to k)	--
508	**Claremont Shale** (T) of Monterey Group, only between Niles Canyon and Calaveras Reservoir, east of Fremont.	Most is chert and porcelaneous shale.....	h	n-m	vc(c)m
		repetitively interbedded with shale, largely subporcelaneous.....	f-qf	vn-m	c-vc
		Some subporcelaneous mudstone.....	qf	to k, vk-20ft	c-vc c-w
		Some shale.....	f-s f	to vk?	c-vc ?c-w
		Some sandstone.....	f	n-4ft	vc(c-m) c-m
		much cemented.....	h	n-4ft	c-w
		Rare to minor silty dolomite?.....	h	(to k)4ft	(w-4ft)
509	Shale and sandstone (T), in Santa Cruz Mountains between Chittenden and Mount Madonna.	Most is porcelaneous to subporcelaneous shale and mudstone.....	f-h (h-qf)f	(k-vk)	c-vc m-w
		Some porcelaneous siltstone.....	h	n-m	c-m
		Some chert and porcelanite.....	h	n-m	vc-m
		repetitively interbedded with subporcelaneous shale.....	f	vn-m	c-vc
		Some sandstone.....	f	n-m	c-m
		repetitively interbedded with shale.....	f	n-m	vc-c
		Minor to some sandstone.....	f	(m-4ft)15ft	(m)w
		and cemented rock.....	h	(to 4ft)	c(m-w)5ft
510	**Pinehurst Shale** (T), in East Bay Hills west of Upper San Leandro Reservoir.	Not seen in field.			
		Most(?) is siliceous shale.....	h	(m-k)10ft	c-vc
		Some(?) interbedded cemented sandstone.....	h	(m-k)10ft	(c-m)w?
511	Chert of **Franciscan assemblage** (KJ), throughout region; metachert of **Franciscan assemblage**, in Marin highlands.	Largely chert.....	h	vn(n-m)vk	vc(c)6ft
		Some repetitively interbedded ferruginous shale....	(f)s f	(vn-n)m	c-vc
		Rare clayey altered rock.....	s	--	--
519	Diatomite with interbedded sand, gravel, and tuff (T), near Napa.	Proportions uncertain.			
		Some(?) tuffaceous sandstone.....	fas f?	m-20ft+	m-a
		Some(?) diatomite and fine-grained diatomaceous rocks.....	f	(n-m)vk?	c ?
		Some(?) conglomerate.....	s, h clasts same?	m-vk	a-vw
		Some(?) clayey rock.....	(s)f same?	m-vk	?c-m ?
		Minor to some(?) tuff.....	fas f?	--	?c-w ?m-w
		and tuff breccia.....	fas, h-f blocks m-w f?, h-f blocks	--	--

Abbreviated unit descriptions of hillside materials

Map unit (see pls. 1-6)	Geologic unit, (age), and location (see discussion in text)	Composition (see discussion in text; fig. 2)	Physical properties (see discussion in text): Hardness (see tables 2,3)	Bedding thickness (see table 3)	Fracture spacing (see table 3)
520	Limestone in E member of Wagner (1978) of **Briones Sandstone** (T), near Sunol Valley, east of Fremont.	Not seen in field.			
		(?)Largely limestone.....	h?	--	--
		Some(?) siliceous inclusions.....	h?	--	--
521	Hercules Shale Member of **Briones Sandstone** (T), in northern part of East Bay Hills.	Most is mudstone and subporcelaneous mudstone.....	f / f-qf?	(vk)	c-vc / c-m
		Some siltstone and clayey fine-grained sandstone...	(f)?	(to 20ft)100ft?	(vc-m) / ?
		Probably some porcelaneous shale or mudstone.....	h	(to 20ft)100ft?	?vc-m
522	**Monterey Group** (T), only on Point Reyes peninsula.	Much porcelaneous mudstone, porcelanite, and chert.....	h	(n-m)k	vc(c)m
		repetitively interbedded with silty shale.....	f-s	vn-n	vc-m
		Much nonsiliceous mudstone.....	(f)s / f	k(vk-100ft+)	c-vc / c(m)w
		Minor to some siltstone.....	(h)	(m-k)	?(m)w
		and diatomaceous rock.....	f?	--	--
		Minor calcite-cemented concretions.....	h	to k?	to w
523	**Monterey Group** (T), only in Diablo Range between Calaveras Reservoir and Anderson Reservoir.	Some to most is chert and porcelanite.....	h	vn(n)5ft	(vc-m)10ft+
		repetitively interbedded with nonsiliceous shale.....	f	(vn)n	c-vc
		Some clayey sandstone.....	f / f-qf	(vk)	vc-m / ?m-w
		Some mudstone and siltstone.....	(f)qf	(vk)	vc-m / m-w
		Minor limestone and calcite-cemented sandstone.....	h	to 10ft+	m-6ft
524	**Monterey Group** (T), only in Diablo Range east of Anderson Reservoir.	Some porcelaneous shale.....	h	n-k	c-m
		repetitively interbedded with nonsiliceous shale.....	f	vn-n	c-vc
		Some clayey sandstone.....	(f)s / f	(tens of ft)	c-vc / c-w
		Some mudstone and lesser porcelaneous mudstone.....	(f)qf	(vk)	c-vc / m?
		Minor calcite-cemented sandstone and concretions...	h	to 4ft	m-w
525	**Monterey Group** (T), only in Gilroy-Sveadal area of Santa Clara Valley and Santa Cruz Mountains.	Much is mudstone, some porcelaneous.....	(f)qf	(vk-tens of ft)	vc-m / ?
		Some porcelaneous shale and siltstone.....	qf	k-tens of ft	m
		Some dirty sandstone.....	(f)s / f?	k-tens of ft	c-m / c(m)
		Some tuffaceous sandstone and siltstone.....	f-h / h-qf	k-tens of ft	(vc-m)w / m-w
		Minor cemented sandstone and dolomite.....	h	to k	m-w
		and bentonitic shale and conglomerate.....	--	--	--

526	**Monterey Group** (T), only in Santa Clara County near Los Altos.	Proportions uncertain.			
		Some to most is porcelaneous shale and mudstone....	f-h	--	vc-m
		Remainder is sandstone and clayey rock as in units 501 and 523-525.....	--	--	--
527	**Monterey Group**, undivided (T), only in areas near Las Trampas Ridge and San Pablo Reservoir in East Bay Hills.	Briefly seen in field.			
		Probably much to most is dirty sandstone.....	(f)	(vk)	--
		Some to much porcelaneous shale and chert.....	(h)	(n-m)	--
		Some to much nonsiliceous shale and mudstone.....	f	--	--
		Minor cemented sandstone and limestone.....	h	--	--
		In detail, physical properties like those of units 529, 364, 530, 333, 506, and 334.			
528	**Monterey Group**, undivided (T), only in East Bay Hills between Dublin and Upper San Leandro Reservoir.	Much sandstone, largely dirty.....	(f-qf)	n-k, vk-50ft?	(vc-m)w / (m)w
		Much nonsiliceous to subporcelaneous shale.....	f	vn-m(vk)	vc-m / ?
		Some chert and porcelaneous shale.....	(h)f	n-m, vk	vc-m / same?
		Minor cemented sandstone.....	h	to k	m-w
529	**Rodeo Shale** (T) of Monterey Group, in East Bay Hills.	Much porcelaneous shale and subporcelaneous mudstone.....	f(qf)h / same?	?n-m, vk-20ft+	(c-vc)m / (c-m)5ft
		Much nonsiliceous shale, mudstone, and siltstone...	f-s / f	?n-m, vk-20ft+	(c-vc) / (c-m)5ft
		Some tuffaceous or clayey fine-grained sandstone...	f-s / f?	n-20ft+	c-m / same?
		Rare limestone and concretions.....	h	(to k)7ft	(m)w
530	**Tice Shale** (T) of Monterey Group, only in East Bay Hills.	Much is porcelaneous shale.....	(h)qf	n-m, vk	vc(c)m
		with some chert.....	h	?(n-m)	vc-m
		Much(?) nonsiliceous shale.....	f	n-m, vk	c-vc / ?
		and subporcelaneous shale and mudstone.....	f-qf	n-m, vk	c-vc / ?
		Minor to some siltstone and clayey or tuffaceous sandstone.....	f-s / f	n-vk	?(c-m)w
		Minor cemented sandstone, limestone, and siliceous carbonate rock.....	h	(to k)	m-w
532	**Tice Shale** (T) of Monterey Group, only between Niles Canyon and Calaveras Reservoir, east of Fremont.	Variable proportions.			
		Some to almost all is porcelaneous shale, porcelanite, and lesser chert.....	h	vn(n)m, k-vk	vc(c)m / vc-w
		Some mudstone, shale, and siltstone.....	f	(vn-n)m, vk	c-vc / m-w
		Minor to much clayey fine-grained sandstone.....	f, h blocks / h	m-vk	c-vc / m-w
		Minor diatomite.....	f	--	c-m
		and limestone.....	h	m-k	m-w
533	**Oursan Sandstone, Claremont Shale,** and **Sobrante Sandstone,** undivided (T), of Monterey Group; near Briones Reservoir in East Bay Hills.	Largely dirty to tuffaceous sandstone.			
		Minor to some clean sandstone.			
		Minor to some siliceous shale and siltstone.			
		Minor to some clayey mudstone and shale.			
		Minor cemented sandstone.			
		Physical properties like those of units 333, 534, and 392.			

Map unit (see pls. 1-6)	Geologic unit, (age), and location (see discussion in text)	Composition (see discussion in text; fig. 2)	Physical properties (see discussion in text): Hardness (see tables 2,3)	Bedding thickness (see table 3)	Fracture spacing (see table 3)
534	**Claremont Shale** (T) of Monterey Group, only in area near Pinole Creek at northern end of East Bay Hills.	Much tuffaceous sandstone. Some siliceous shale and siltstone. Probably some clayey shale.	Physical properties like those of unit 506.		
535	Diatomite unit of **Monterey Group** (T), at northern end of East Bay Hills near Pinole.	Much diatomite and diatomaceous shale.....	f-h	to 20ft+	vc-m / m-w
		Much clayey and tuffaceous sandstone.....	(f)s / f?	(vk)100ft?	vc(m-w) / c(m-w)
		Some tuffaceous mudstone and siltstone.....	f-h	(vk)	c-m / same?
		Minor chert.....	h	m	?c-m
		and concretions.....	h	to 4ft	m-4ft
536	**Lambert Shale** (T), only in Santa Clara County part of Santa Cruz Mountains.	Most is subporcelaneous mudstone, siltstone, and claystone.....	f-h	(vk)	(c)m / ?
		Minor chert.....	h	?(n-m)	(c)m
		Minor to some sandstone.....	(f)h	to 100ft	m-w
		Minor dolomite.....	h	m-k	?c-w
537	Upper part of Sidney Flat Shale Member of Fulmer (1964) of **Markley Formation** (T), in the monocline north of Mount Diablo.	Most(?) is shale, mudstone, and siltstone.....	f	(5-30ft)	vc-m / c(m)w
		Some(?) partially siliceous organic shale to siltstone.....	(f-qf)h?	n(5-10ft)30ft	(vc)m / c(m)w
		Minor sandstone.....	f	?n-8ft	c-m / ?
		Minor calcite-cemented sandstone and limestone nodules.....	h	to m	m
538	Lower part of Sidney Flat Shale Member of Fulmer (1964) of **Markley Formation** (T), in the monocline north of Mount Diablo.	Most is mudstone and shale.....	f	m-4ft+, vk	c-vc / ?m-w
		Some siliceous shale.....	f-h	n-m	?vc-m
		and diatomite.....	f-s	?k-vk	--
		Some clayey and tuffaceous sandstone.....	s(f)qf / (f)qf	n-k	(c-m)w
539	**Markley Formation** (T) (equivalent to Kellogg Shale of Clark and Campbell, 1942), only in area east of Mount Diablo.	Much clay shale.....	f	4-25ft	(vc)c / m?
		Much partially siliceous organic silty shale.....	f-qf	4-25ft	(vc)m / m-w
		Minor sandstone at base.....	f?	8ft	--
540	**Markley Formation** and **Nortonville Shale**, undivided (T), east of Mount Diablo.	Much clay shale.....	f	4-25ft	(vc)c / m?
		Much partially siliceous organic silty shale.....	f-qf	4-25ft	(vc)m / m-w
		Minor mudstone.....	f	--	c-vc / ?
		Minor sandstone.....	f?	8ft	--

541	Mudstone (T), in Santa Cruz Mountains near Loma Prieta and Mount Madonna.	Largely mudstone, much subporcelaneous.....	f-qf	(vk)	c-vc / c-w
		Minor to some shale.....	f	--	c-vc / c-w
		Minor to some sandstone, much calcite-cemented.....	h-qf	m-10ft+	c(w)5ft
		much uncemented.....	f-s / f?	m-10ft+	c-w
600	Conglomerate unit (K) of **Great Valley sequence**, only in East Bay Hills near Dublin.	Briefly seen in field.			
		Almost all conglomerate with dirty and clayey sandstone matrix.....	(f-s),(h-f)clasts(c-m)w / f-h, h clasts	(hundreds of ft)	(vw)
		Minor sandstone.....	?f-s / ?f-h	--	--
601	Predominantly conglomerate unit (K) of **Great Valley sequence**, only east of San Jose.	Largely conglomerate with dirty sandstone matrix, much calcite-cemented where fresh.....	(f),h clasts c-m / (h-qf), h clasts	(tens to hundreds of ft)	w(3-8ft)10ft
		Some sandstone.....	(f)h / ?(h-qf)	m-vk	c(m-w)4ft
		and flysch.....	f-h	(vk)	vc-m / ?m-w
602	Predominantly conglomerate unit (K) of **Great Valley sequence**, only in Santa Cruz Mountains near Sierra Azul.	Largely conglomerate with dirty sandstone matrix...	(f)h,(h) clasts c-m / (h)?, h clasts	(tens of ft)	c-m, w-5ft / ?(w-5ft)
		some cemented.....	h	to 9ft	?(w-5ft)
		Some sandstone.....	s(f-h) / ?f-h	m-k, 20ft+	c-m, m-4ft
		some cemented.....	h	to 8ft+	to 8 ft
		and mudstone.....	f	m-vk	c-vc / m-w
603	**Novato Conglomerate** (K?), east of Marin highlands near San Pablo Bay.	Almost all conglomerate with dirty and clayey sandstone matrix.....	f, h clasts (c-m)w / f-h, h clasts	to hundreds of ft	w-6ft
		Minor sandstone.....	f / h	m-k	c-m
604	Conglomerate unit (KJ) of **Great Valley sequence**, only in Mendocino highlands.	Largely conglomerate with dirty and clayey sandstone matrix.....	f, h clasts c-m / f-h, h clasts	to hundreds of ft	w-vw
		Some dirty sandstone.....	f / f-h	m-k, vk-100ft+	(c-m)w
		Some to locally much flysch of mudstone, siltstone, and sandstone.....	f	to 300 ft+	(c-vc) / ?m-w
610	Conglomerate in unnamed unit (TK), in Diablo Range east of Santa Clara Valley.	Not seen in field.			
		Most is conglomerate.....	h-f, h clasts c-m	?(vk)	w-4ft
		and sandstone.....	f-h / h	(k-vk)	c(m-w)8ft
		Some mudstone, shale, and siltstone.....	f / h-f	(n-k)	c-vc / c(m)w
		Some calcite-cemented beds and concretions.....	h	to k+	(m-w)
611	Conglomerate unit (K) of **Great Valley sequence**, only in East Bay Hills near Hayward.	Not seen in field.			
		Largely(?) sandstone.....	?f-h	(vk)	--
		Much(?) conglomerate.....	?f-h,(h)clasts(c-m)w	vk	--
		Some(?) shale (flysch?).....	f?	? to vk	c-vc / ?
		Some calcite-cemented rock.....	h	--	--

Abbreviated unit descriptions of hillside materials

Map unit (see pls. 1-6)	Geologic unit, (age), and location (see discussion in text)	Composition (see discussion in text; fig. 2)	Physical properties (see discussion in text): Hardness (see tables 2,3)	Bedding thickness (see table 3)	Fracture spacing (see table 3)
612	Conglomerate unit (K) of **Great Valley sequence** (part of Del Valle Formation of Hall, 1958), only on Sunol Ridge in East Bay Hills and near Del Valle Reservoir south of Livermore Valley.	Not seen in field.			
		Much conglomerate with largely dirty sandstone matrix	?f, h clasts c-m	(10-100ft)	--
		Much sandstone, largely dirty	f?	(10-100ft)	--
		Minor to some(?) calcite-cemented rock	h	--	--
613	Strata of Stewarts Point (K), near Sonoma County coast.	Much(?) sandstone	f-h / h	(k-15ft)	c-m, ?m(w-vw)
		Much(?) conglomerate	f-h,(h)clasts(c-m)w / h, h clasts	k-40ft	c-m,?m(w-vw)
		Minor to some mudstone	f?	(vn-m)200ft	c-vc / ?
614	Conglomerate member of **Redwood Canyon Formation** (K), in East Bay Hills near Upper San Leandro Reservoir.	Not seen in field.			
		Largely(?) sandstone	f(h)	m(k-50ft+)	c(w-6ft)
		Some to much conglomerate with dirty sandstone matrix	f-h, h clasts (m)w / (h)	(k-20ft+)	(w-5ft+)
		Possibly minor siltstone and mudstone	f	n-k	c-vc / ?
615	**Oakland Conglomerate** (K), in East Bay Hills near Oakland.	Much(?) conglomerate with largely dirty sandstone matrix	f,h clasts (c-m)w / ?f-h, h clasts	m(vk-10ft)25ft+	?w-vw
		Much(?) sandstone, largely dirty	f-h	m-50ft+	(c-w)
		Minor shale near top	?f-h	n-k	c-vc / ?
616	Conglomerate (KJ), in East Bay Hills near Hayward.	Much(?) conglomerate	f, h clasts c-m / f(h), h clasts	k-50ft	m(w)4ft+
		Much(?) dirty sandstone	f-h / h	k-50ft	c-m
		Minor shale	f-h	(n-k)	c-vc / ?
620	Mapped sandstone in unnamed unit (TK), in Diablo Range east of Santa Clara Valley.	Largely sandstone	f-h / h	(to k)15ft	c(m-w)8ft
		some calcite-cemented	h	to k+	(m-w)
		Some mudstone, shale, and siltstone	f / h-f	(n-k)	c-vc / c(m)w
		Minor to some conglomerate	h-f, h clasts c-m	--	w-4ft
621	Predominantly sandstone unit in unnamed sandstone and shale (K) of **Great Valley sequence**, near Mount Diablo.	Largely sandstone, dirty to clean	(qf-h)	(m-8ft)30ft+	m(w-4ft)6ft
		Some to much mudstone, siltstone, and lesser shale	f, h	(vn-4ft)50ft	c-vc / ?m-w
		Minor calcite-cemented concretions	h	to 6ft	to 6ft

622	Predominantly sandstone unit (K) of **Great Valley sequence**, only in East Bay Hills near Martinez and east of Livermore Valley near Tesla.	Exposure near Tesla not seen in field.			
		Largely sandstone.....	f-h	k-40ft	c-vc, (m-w)5ft / (m-w)5ft
		Some to much mudstone, siltstone, and shale.....	f-h	--	c-vc / ?m-w
		Minor(?) to some(?) calcite-cemented rock.....	h	--	--
623	Sandstone unit (K) of **Great Valley sequence**, only in Diablo Range south of Sunol Valley.	Briefly seen in field.			
		Largely(?) sandstone.....	h-f	m-25ft	c(m-w)10ft
		some(?) calcite-cemented.....	h	?m-vk	(m-5ft)
		Some to much mudstone, shale, and siltstone.....	h-f	m-vk	c-vc / ?
624	Sandstone and shale unit (K) of **Great Valley sequence**, only near Crockett at north end of East Bay Hills.	Largely sandstone.....	f / (s)?	n-k, 25-60ft	w / a
		Some to much mudstone.....	f? / (fas)?	n-k	c-vc
		Minor concretions.....	h	to 4ft	m-10ft
625	Predominantly sandstone unit (K) of **Great Valley sequence**, only in Santa Teresa Hills south of San Jose.	Largely clean sandstone.....	f-qf / f?	m(k-8ft)20ft+	m(w-4ft)12ft / ?(4-12ft)
		minor to some calcite-cemented.....	h	--	--
		Some mudstone, siltstone, and shale.....	f	?(vn-k)vk	c-vc / ?
626	Predominantly sandstone unit (K) of **Great Valley sequence**, only in Diablo Range south from Calaveras Reservoir.	Largely sandstone.....	h-f / h	m-50ft	(c-w)10ft
		some to much calcite-cemented.....	h	to 10ft?	?(to w)
		Some mudstone, shale, siltstone, and clayey sandstone.....	f-h	(n-k)vk	c-vc / ?
627	Sandstone unit (K) of **Great Valley sequence**, only east of Martinez in vicinity of Concord.	Much high-matrix fine-grained sandstone to sandy siltstone.....	f	to tens of ft	c-m
		Much clean to dirty and tuffaceous sandstone.....	qf / qf?	k-10ft,10-40ft	m(w)5ft
		Minor to some(?) mudstone and shale.....	f?	to 40ft	c-vc / ?
		Minor to some calcite-cemented concretions.....	h	k-4ft	w-4ft
628	**Deer Valley Formation of Colburn (1964)** (K), east of Mount Diablo.	Almost all is sandstone, some clean.....	(f)s / f?	m-k(10-20ft+)	(c-m)4ft / ?
		much silty.....	f / f?	m-k(10-20ft+)	(c-m)4ft / ?
		some clayey.....	f / f?	(vk)	(vc-m) / ?
		Minor to locally some calcite-cemented beds and concretions.....	h-qf	(to 4ft)10ft	(m-w)vw?
		Minor siltstone and mudstone.....	f	to k	c-vc / ?
		Rare conglomerate.....	f?,h clasts c-m / same?	vk-30ft	(m-w)vw?
629	Mappable sandstone in lower member of **Moreno Formation** (K), east of Mount Diablo.	Not seen in field.			
		Largely clean sandstone.....	f	(vk-30ft+)	(m-w)4ft+
		some calcite-cemented.....	h	to 10ft+	?to 4ft+
		Some to much mudstone, shale, and siltstone.....	f	n-vk	c-vc / m-w

Abbreviated unit descriptions of hillside materials

Map unit (see pls. 1-6)	Geologic unit, (age), and location (see discussion in text)	Composition (see discussion in text; fig. 2)	Physical properties (see discussion in text): Hardness (see tables 2,3)	Bedding thickness (see table 3)	Fracture spacing (see table 3)
630	**Redwood Canyon Formation** (K), in East Bay Hills east of Oakland.	Largely sandstone	f(h)	m(k-10ft)40ft+	c(w-6ft)
		Some siltstone, laminated sandstone, mudstone, and shale	f	(n-5ft)10ft+	c-vc / ?(m-w)
631	Predominantly sandstone unit (K) of **Great Valley sequence** (correlative with F-2 zone of Goudkoff, 1942), only north and east of Livermore Valley.	Most(?) is sandstone	f / f?	(k-10ft+)	(w-8ft)
		some calcite-cemented	h	to 6ft	to 6ft
		Much flysch, consisting of	--	vk-30ft+	--
		much sandstone	f	n-m	c-m
		much mudstone	f	(n-m)	c-vc / ?c-m
		Minor conglomerate	f, h clasts c-m	to 100ft	--
632	**Guinda Formation of Kirby (1942)** (K), in and near Yolo Range.	Largely sandstone, dirty to clean	(s-f)h / ?f-h	(k-30ft+)	m(w-6ft)15ft+
		minor to some calcite-cemented	h	(to k)12ft	?(w-6ft)
		Some mudstone, shale, siltstone, and laminated sandstone	s-h / ?f-h	to 40ft+	c-vc / ?
633	**Sites Formation of Kirby (1942)** (K), in and near Yolo Range.	Largely sandstone, most dirty	h-s / h	n(m-k)20ft+	c(m-w)15ft
		Some to much mudstone, siltstone, laminated sandstone, and shale	h-f / (h)	(n-6ft)	c-vc / ?m-w
		Minor concretions	h	to k	to w
634	**Venado Formation of Kirby (1943)** (K), in Yolo Range.	Largely dirty sandstone, much partially calcite-cemented	(f)h / h	(k-20ft)100ft	w-10ft,10-20ft
		Some to much flysch, consisting of	--	to 50ft+	--
		largely mudstone, siltstone, and shale	f / f-h	(vn-m)	c-vc / ?m-w
		some dirty sandstone	f / f-h	vn(n)m	(c-vc)
		Minor conglomerate	f-h, h clasts c-m / h	6-35ft	?w-20ft
		Minor calcite-cemented concretions	h	--	--
635	Lower part of **Knoxville Formation** (Robinson, 1956) (J); part of shale unit (KJ), only near Niles District of Fremont; in East Bay Hills between Hayward and Fremont.	Most is dirty sandstone	f-h / (h)	(m-4ft)10ft?	vc(c)w / (c)w
		Some to much mudstone and shale	f-h	n-10ft+	c-vc / ?
		much sheared	f-s	--	c-vc
		Minor to some(?) conglomerate	f, h clasts / (h)f, h clasts	--	m-w

640	Unnamed sandstone, shale, and conglomerate (T), near Point San Pedro on San Mateo County coast.	Almost all is flysch, consisting of much sandstone, much calcite-cemented.....	f/h	(n-m)k	(c-m)w
		much shale.....	f-s/f-h	(n-m)k	c-vc/?
		Minor conglomerate.....	f, h clasts m/h, h clasts m-5ft	(vk)	c-m, w-5ft/w-5ft
641	Shale and sandstone in unnamed unit (TK), only in Diablo Range east of Santa Clara Valley.	Largely flysch, consisting of largely mudstone, shale, and siltstone.....	f/h-f	(n-k)20ft+	c-vc/c(m)w
		some sandstone.....	f-h/h	(n-m)k	c-m
		Some sandstone.....	f-h/h	(k-6ft)10ft	c(m-w)8ft
		some calcite-cemented beds and concretions.....	h	to k+	(m-w)
		Minor conglomerate.....	h-f, h clasts c-m	--	w-4ft
642	Shale and sandstone (TK), only in Santa Cruz Mountains near Mount Madonna and Mount Umunhum.	Briefly seen in field. Largely(?) flysch, consisting of much sandstone.....	f-h	n-k	c-w
		much mudstone and shale.....	f-h/?	n-k	c-vc/m-w
		Some(?) dirty sandstone.....	f-h	(to 6ft)15ft	c(w)4ft
		much calcite-cemented.....	h	--	c-4ft
		Some(?) mudstone, much subporcelaneous.....	f-h	to hundreds of ft	c-vc/c-w
		Rare conglomerate.....	--	to k?	--
643	Unnamed unit (K) of **Great Valley sequence**, only in East Bay Hills near Oakland.	Much to most is flysch, consisting of largely mudstone, lesser siltstone and shale.....	f	(n-k)vk	c-vc/?m-w
		some to much dirty sandstone.....	(f)/(h)	n-m	c-m
		Some to much dirty sandstone.....	(h)f/(h)	k-25ft	(c-w)10ft
		some calcite-cemented.....	h	to vk	(c-w)
		Minor conglomerate like unit 615.....	--	--	--
644	Sandstone and shale unit (K) of **Great Valley sequence**, only in East Bay Hills near Hayward.	Most is flysch, consisting of.....	--	tens to hundreds of ft	--
		largely mudstone, shale, and siltstone.....	h-f	(m-4ft)	c-vc/?m-w
		some sandstone.....	h-f	n-m	c-m
		Some dirty to clean sandstone.....	h-f, f-s/f?	(m-4ft)25ft+	(m-w)5ft
		Minor calcite-cemented beds and concretions.....	h	to vk	(m-w)5ft
		Minor conglomerate.....	h-f, h clasts c-m	to 20ft+	?(m-w)5ft
645	Sandstone and shale unit (K) of **Great Valley sequence**, only south of Livermore Valley near Del Valle Reservoir.	Much sandstone, dirty to clean.....	s(f)h/?f-h	vk-15ft	c(m-4ft)8ft
		some calcite-cemented.....	h	to 6ft	m-4ft
		Much flysch, consisting of.....	--	to 70ft+	--
		largely siltstone, mudstone, and clayey fine-grained sandstone.....	f/?	n(m-k)8ft	(c-vc)/?m-w
		some sandstone.....	s(f)h/?f-h	m-k	m-w

Abbreviated unit descriptions of hillside materials

Map unit (see pls. 1-6)	Geologic unit, (age), and location (see discussion in text)	Composition (see discussion in text; fig. 2)	Physical properties (see discussion in text): Hardness (see tables 2,3)	Bedding thickness (see table 3)	Fracture spacing (see table 3)
646	Sandstone, shale, and minor conglomerate unit (K) of **Great Valley sequence**, only on east side of Santa Clara Valley near San Jose.	Most is flysch, consisting of.....	--	vk	--
		largely mudstone and siltstone.....	f / f?	n-k	c-vc / ?m-w
		some sandstone.....	qf-f / same?	n-m	c-m
		Some sandstone.....	qf-f / same?	k-vk	(m)w
		Probably minor to some conglomerate.....	f-s, h clasts (m) / f-h, h clasts	k-vk	w(3-8ft)
647	Sandstone and shale unit (K) of **Great Valley sequence**, only in Santa Cruz Mountains between Sierra Azul and Mount Madonna.	Most(?) is flysch, consisting of largely mudstone and siltstone.....	f-qf	(n-m)k	c-vc / m-w
		much sandstone.....	(h)f / h	(n-m)20ft	(c-m)w
		Some to much dirty to clayey sandstone and siltstone.....	(f) / ?f-h	vk-200ft+	vc-m / c-w
		Minor to locally some(?) cemented sandstone.....	h	vk-100ft	c(m-w)4ft
		Minor conglomerate like unit 602.....	--	to tens of ft	--
648	Unnamed formation, undivided (K), of **Great Valley sequence**, only in and near Yolo Range.	Proportions uncertain. Most(?) is mudstone, shale, and claystone.....	f	(tens of ft)	c-vc / ?
		Some(?) clean to dirty sandstone.....	(f) / f?	(vk-20ft)	c(m-4ft)10ft
		some calcite-cemented.....	h	to 8ft	m-w
		Minor(?) siliceous shale.....	h	n-m	c-m
649	Predominantly sandstone unit (K) of **Great Valley sequence** (correlative with F zone of Goudkoff, 1942), only east of Livermore Valley.	Much sandstone, most clean.....	(f)s / (h)?	m-4ft, vk-25ft+	m(w)4ft
		some calcite-cemented.....	h	to 6ft	m(w-4ft)
		Much flysch, consisting of.....	--	m-4ft, vk-20ft+	--
		largely mudstone, shale, and siltstone.....	f / f-h	n-vk	(c-vc) / ?m-w
		some sandstone.....	(f) / f-h	n-m	c-m
		Minor conglomerate, most calcite-cemented.....	(h), h clasts c-m	(to 5ft)20ft	c(m-w)5ft
		Rare porcelaneous shale.....	--	to 30ft	--
650	Joaquin Ridge Sandstone Member of Goudkoff (1945) of **Panoche Formation** (K), east of Mount Diablo.	Much sandstone, most clean.....	(f) / f-h	(k-10ft)100ft	c(m-w)5ft
		much calcite-cemented.....	h	(to k)6ft	c(m-w)5ft
		Much flysch, consisting of.....	--	(vk-tens of ft)300ft	--
		largely mudstone, shale, and siltstone.....	f	(m-k)5ft+	(c-vc)m / ?m-w
		some sandstone.....	(f) / f-h	n-m	c-m
		Minor conglomerate, most calcite-cemented.....	(h), h clasts c-m	(to 5ft)20ft	c(m-w)5ft
		Rare porcelaneous shale.....	h?	to 30ft	?vc-m

651	Mappable sandstone interbeds in upper shale and siltstone member of **Marlife Shale of Payne (1962)** (K), near Mount Diablo.	Not seen in field. Some to much sandstone, some to much calcite-cemented. Much to most flysch, consisting of largely mudstone, shale, and siltstone, some sandstone.	Physical properties like those of unit 650.		
652	Middle sandstone member of **Marlife Shale of Payne (1962)** (K), near Mount Diablo.	Much sandstone, dirty to clean	f(qf-h)	m(k-10ft)20ft+	m(w-4ft)8ft
		some calcite-cemented	h	(to 4ft)9ft	(to 4ft)
		Much mudstone and siltstone	f-h / same?	n-150ft	c-vc / ?m-w
		Minor to some conglomerate with sandstone matrix	f, h clasts (c-m)4ft	to 100ft	--
653	Predominantly sandstone unit (K) of **Great Valley sequence** (correlative with G-1 zone of Goudkoff, 1942), only north and east of Livermore Valley.	Briefly seen in field. Probably largely clayey sandstone, possibly with mudstone	f? / ?f-h	--	?vc-m / ?m-w
654	**Joaquin Miller Formation** (K), in East Bay Hills near Oakland.	Much sandstone and siltstone	(h)f / h	(m-k)30ft	(c-w)4ft
		some calcite-cemented	h	to k?	(c-w)
		Much shale	(h)f / h	(vn-k)20ft	c-vc / ?
		Minor conglomerate with sandstone matrix	f, h clasts / ?f-h, h clasts	5-20ft	?w-vw
		Rare limestone lenses	h	--	--
655	Unnamed sandstone and shale, undivided (K), of **Great Valley sequence** (equivalent to unit Ku? of source map), only northwest of Mount Diablo.	Much mudstone, claystone, and lesser shale	f / f?	(n-6ft)10ft	c-vc / m?
		Much sandstone, most dirty	f / f-h	(to k)10ft	c-w
		some to much clayey	f / f-h	to 10ft?	c-vc / c-w
656	**Pigeon Point Formation** (K); unnamed sandstone at San Bruno Mountain (KJ); in San Mateo County.	Not seen in field at San Bruno Mountain. Much sandstone, largely dirty	f / h	(n-4ft)20ft+	c-5ft
		Much mudstone, shale, and siltstone	f-s / f-h	(n-4ft)20ft+	c-vc / ?
		Some conglomerate south of Pescadero Point	f,f-h clasts (c-m) / h	(to 4ft)20ft+	c-5ft
657	Unnamed formation (KJ) of **Great Valley sequence**, in Yolo Range.	Much(?) dirty sandstone	f / h?	(m-k)10ft	(m-w)5ft
		much calcite-cemented	h	?(m-k)10ft	(m-w)5ft
		Much(?) flysch of siltstone, laminated sandstone, mudstone, and shale	(f)s / ?(h)f	n-vk	c-vc / ?
658	**Great Valley sequence**, undivided (KJ), only in Mendocino highlands and Mayacmas Mountains.	Briefly seen in field. Some to much(?) sandstone. Some to much(?) conglomerate. Some to much(?) mudstone and shale.	Physical properties like those of units 604 and 684.		
659	Sandstone and claystone unit (KJ) of **Great Valley sequence**, in Marin highlands.	Not seen in field. Much(?) sandstone. Much(?) claystone. Minor conglomerate like unit 603.	Physical properties like those of units 684 and 603.		

Abbreviated unit descriptions of hillside materials

Map unit (see pls. 1-6)	Geologic unit, (age), and location (see discussion in text)	Composition (see discussion in text; fig. 2)	Physical properties (see discussion in text): Hardness (see tables 2,3)	Bedding thickness (see table 3)	Fracture spacing (see table 3)
660	Predominantly shale unit (K) of **Great Valley sequence**, only in Diablo Range near and south of Calaveras Reservoir.	Almost all is flysch, consisting of largely mudstone, siltstone, and shale.....	f / h-f	(m-k)10ft+	c-vc / m-w
		some sandstone.....	f-h / (h)qf	n-m	c-m
		Some sandstone.....	f-h / (h)qf	(k-4ft)100ft+	(c-w)4ft
		Minor calcite-cemented sandstone,.....	h	(to 4ft)	c-4ft
		conglomerate,.....	f-h, h clasts / h	to vk	w-4ft
		limestone and dolomite.....	h	(n-m)k	(c-m)w
661	Predominantly shale unit (K) of **Great Valley sequence**, only south of San Jose in Santa Teresa Hills and Santa Cruz Mountains.	Most is mudstone with lesser shale.....	f	(m-vk)100ft+	c-vc / ?m-w
		Some sandstone to siltstone.....	f-h	(n-m)6ft	(c-w)4ft
		Minor carbonate-cemented concretions.....	h	to m	c-m
662	Shale unit (K) of **Great Valley sequence**, only in East Bay Hills near Dublin.	Briefly seen in field. Most to almost all is mudstone, shale, and siltstone.....	?(f) / ?h-f	(vk)	(c-vc) / ?m-w
		Minor limonite concretions.....	h?	--	--
		Probably minor sandstone.....	(f)?	(n-m)	c-m
663	Shale unit (K) of **Great Valley sequence**, only in East Bay Hills near Martinez and east of Livermore Valley near Tesla.	Not seen in field. Almost all is flysch, like unit 679.	--	--	--
664	Sandstone, shale, and minor conglomerate unit (K) of **Great Valley sequence**; only in Diablo Range near Sunol Valley.	Briefly seen in field. Like unit 660.	--	--	--
665	Sandstone unit (K) of **Great Valley sequence**, only west of Martinez in East Bay Hills.	Largely sandy mudstone.....	f / f?	vk-200ft	c-vc / m-w
		Some fine-grained sandstone, largely clayey.....	f / f?	vk-60ft	c-vc / m-w
		Minor to possibly some dirty glauconitic sandstone.....	h-f	3-10ft+	(m-w)6ft
666	Strata of Anchor Bay (K), near Sonoma County coast.	Largely flysch, consisting of largely mudstone.....	f	n-vk	c-vc / c-m
		some sandstone.....	f-h / h	vn-m	c-m
		Some sandstone.....	f-h / h	m-40ft?	m-vw
		Minor to some conglomerate.....	f-h, (h) clasts c-m / h	m-40ft?	?vw

667	**Shephard Creek Formation** (K), in East Bay Hills near Oakland.	Almost all is flysch, consisting of.....	--	(tens to hundreds of ft)	--
		largely mudstone and shale.....	h-f	(m-k)20ft+	c-vc / ?
		some sandstone and siltstone.....	h-f / same?	n-m	c-m
		Minor to some sandstone.....	h-f / same?	k-15ft+	c-w
668	Predominantly shale units (K) of **Great Valley sequence** (probably correlative with E and F-2 zones of Goudkoff, 1942), only north and east of Livermore Valley.	Flysch, consisting of most to almost all mudstone and shale.....	f / h-f	m-vk	vc-m / ?m-w
		minor to some sandstone.....	f-h	n-m	c-m
669	**Forbes Formation of Kirby (1942)** (K), in and near Yolo Range.	Almost all is mudstone, siltstone, clayey fine-grained sandstone, and shale.....	f-s / ?f-h	(tens of ft or more)	c-vc / ?(c-m)
		Minor clean to dirty sandstone.....	(h-f)s	(n-vk)20ft	(m-4ft)6ft
		much calcite-cemented.....	h	(to 10ft)20ft?	(w)6ft
		Rare siliceous shale.....	h	m	c-m
		Rare bentonite.....	f?	m-k	c-vc / ?
670	**Funks Formation of Kirby (1942)** (K), in Yolo Range.	Most is claystone, shale, mudstone, siltstone, and lesser fine-grained sandstone.....	?(f) / h-f	n(vk)	c-vc / ?m-w
		Minor to some clean to dirty sandstone.....	f-s / ?(f)	(k-20ft)	m(w-6ft)
		some calcite-cemented.....	h	(to k)10ft	(w)
671	**Yolo Formation of Kirby (1942)** (K), in Yolo Range.	Most is flysch, consisting of.....	--	to 30ft+	--
		largely mudstone, siltstone, and shale.....	f / h-f	--	(c-vc) / ?m-w
		some dirty sandstone.....	f-h / h	--	n
		Some dirty sandstone.....	f-h / h	(m-k)8ft	(m-w)8ft
		Rare concretions.....	h	n-m	c-m
672	Upper siltstone member of **Moreno Formation** (K), east of Mount Diablo.	Most(?) is mudstone and siltstone.....	f	(vk)	c-vc / ?m-w
		Some clean sandstone.....	f / f?	n-k, vk-50ft+	c(m-w)4ft
		some calcite-cemented.....	h	m-k, vk-10ft	(m-w)10ft
		Some(?) shale or claystone.....	f?	--	c-vc / ?m-w
		Rare limestone.....	h	to m?	c-m
673	Lower shale and claystone member of **Moreno Formation** (K), east of Mount Diablo.	Most is mudstone, shale, and claystone.....	f	n-vk	c-vc / ?m-w
		Some siltstone and dirty fine-grained sandstone....	f	(vn-k)	(c-vc) / ?m-w
		Some clean sandstone.....	f	(vk-50ft+)	(m-w)4ft
		some calcite-cemented.....	h	?(to k)	m-w
		Rare limestone.....	h	to m?	c-m

Abbreviated unit descriptions of hillside materials

Map unit (see pls. 1-6)	Geologic unit, (age), and location (see discussion in text)	Composition (see discussion in text; fig. 2)	Physical properties (see discussion in text): Hardness (see tables 2,3)	Bedding thickness (see table 3)	Fracture spacing (see table 3)
674	Shale interbeds in Joaquin Ridge Sandstone Member of Goudkoff (1945) of **Panoche Formation** (K), east of Mount Diablo.	Most to almost all is flysch, consisting of.....	--	(tens to hundreds of ft)	--
		largely mudstone.....	f	n-vk	c-vc / ?m-w
		some sandstone and siltstone.....	f	n-m	vc-m / ?c-w
		Minor to some sandstone, most clean.....	f	to 10ft+	c(m-w)5ft
		much calcite-cemented.....	h	to 5ft+	c(m-w)5ft
675	Upper shale and siltstone member of **Marlife Shale of Payne (1962)** (K), near Mount Diablo.	Almost all is flysch, consisting of.....	--	(tens to hundreds of ft)	--
		largely(?) siltstone.....	f / f?	(n-m)	c-vc / ?m-w
		much(?) mudstone and shale.....	f / f?	(n-m)	c-vc / ?m-w
		some dirty to clayey sandstone.....	f / f?	(n-m)	vc-m / ?
		Minor to some sandstone, much clean.....	f / f?	(m-5ft)10ft+	(m)w
		much calcite-cemented.....	f-h / h	(to k)6ft	w-4ft
676	Lower shale and siltstone member of **Marlife Shale of Payne (1962)** (K), near Mount Diablo.	Almost all is flysch, consisting of.....	--	(tens to hundreds of ft)	--
		largely shale, mudstone, and siltstone.....	f / f?	(m-k)	c-vc / ?m-w
		some sandstone.....	f / f?	n	(c)
		Minor sandstone, clean to dirty.....	f / f?	(m-k)10ft+	(m-w)
		some calcite-cemented.....	h	to 4ft	(m-w)4ft
677	Mappable sandstone interbeds in lower shale and siltstone member of **Marlife Shale of Payne (1962)** (K), near Mount Diablo.	Most is mudstone and lesser siltstone.....	f / f?	k-50ft	c-vc / (m)w
		Some to much sandstone, clean to dirty.....	f / f?	m-15ft	c(m)w
		some to much calcite-cemented.....	h	to 6ft+?	(m-w)6ft
		Rare limestone.....	h	?n-m	c-m
678	Unnamed sandstone and shale, undivided (K), of **Great Valley sequence**, only near Mount Diablo.	Largely flysch, consisting of largely mudstone and shale.....	f-h	vn-10ft+	c-vc / m?
		minor to some sandstone.....	f-h / (qf-h)	n-m	c-m
		Some sandstone, most dirty.....	f-h / (qf-h)	(m-4ft)50ft	vc(m-w)6ft / (m-w)6ft
		some calcite-cemented.....	h	(to 4ft)20ft	(w)5ft
		Minor conglomerate.....	(h)	(to 5ft)20ft	?(w-vw)
		Probably rare vitric tuff.....	f?	30ft	--

679	Predominantly shale unit in unnamed sandstone and shale (K) of **Great Valley sequence**, only near Mount Diablo.	Almost all flysch, consisting of.....	--	to hundreds of ft	--
		largely mudstone.....	f / f-h	m-k, vk	c-vc / ?c-m
		some siltstone and silty sandstone.....	f-h	n-m	vc(c)m / (c)m
		Minor to some sandstone, clean to dirty.....	(f-qf) / ?qf-h	(m-6ft)10ft?	(m-4ft)
		some calcite-cemented.....	h	(m-6ft)	(m-4ft)
680	Unnamed shale (K) of **Great Valley sequence** (equivalent to unit Ks? of source map), only west of Clayton, northwest of Mount Diablo.	Briefly seen in field.			
		Probably largely flysch, consisting of.....	--	(vk-50ft)	--
		largely mudstone and shale.....	h-f	n-6ft	c-vc / (m)w
		minor to some sandstone.....	h	n-m	c-m
		Possibly much siltstone and clayey sandstone.....	--	--	--
		Minor to some dirty sandstone.....	h	(m-10ft)	?(m-w)5ft
681	Unnamed shale (K) of **Great Valley sequence**, only in Marsh Creek area near Mount Diablo.	Largely flysch, consisting of.....	--	(tens to hundreds of ft)	--
		largely mudstone, shale, and lesser siltstone....	(f) / f-h?	(n-6ft)	vc-m / ?m-w
		minor sandstone.....	(f)	n-m	c-m
		Some dirty sandstone.....	f-qf / fas(f-h)?	(m-4ft)10ft+	(vc-w)5ft / (m-w)5ft
		much calcite-cemented.....	h	to vk	m-w+
682	Unnamed unit (K) of **Great Valley sequence**, only east of Livermore Valley near Tesla. Includes Horsetown Formation of Huey (1948).	Not seen in field.			
		Largely shale.....	f-h / h	to vk	c-vc / ?
		Minor to some dirty sandstone.....	f / h	--	(c-m)
		Minor concretions.....	h	--	--
		Some(?) clayey sheared rock.....	f-s	--	c-vc
683	Unnamed formations (KJ) and undivided rocks (K) of **Great Valley sequence**, only between Napa Range and Yolo Range and at north end of East Bay Hills near Martinez.	Almost all is flysch, consisting of			
		largely mudstone, siltstone, and shale.....	f-h / h	n-vk	c-vc / m-w
		some sandstone.....	h-f / h	(n)m	c-m
		Minor to some sandstone.....	h-f / h	m-k, vk-50ft+	m-4ft+
		Minor claystone.....	--	to 20ft	--
		Rare calcite-cemented sandstone beds and concretions.....	h	--	--
		Rare conglomerate.....	h-f, h clasts (c)m / h	5-25ft	(m-4ft)
684	Siltstone and minor sandstone unit (KJ) of **Great Valley sequence**, north and west of Santa Rosa in Mendocino highlands and Mayacmas Mountains.	Most is mudstone and shale.....	f	vk	c-vc / c-m
		Some to much flysch, consisting of.....	--	(tens to hundreds of ft)	--
		largely mudstone and shale.....	f	(n-k)	c-vc / c-m
		some sandstone and siltstone.....	f	n-m	vc-m / c-m
		Some dirty sandstone.....	f-h	k-50ft?	m-vw
		some calcite-cemented.....	h	m-vk?	m-vw?
		Minor conglomerate like unit 604.....	--	--	--
		and limestone.....	h	--	--

Map unit (see pls. 1-6)	Geologic unit, (age), and location (see discussion in text)	Composition (see discussion in text; fig. 2)	Physical properties (see discussion in text): Hardness (see tables 2,3)	Bedding thickness (see table 3)	Fracture spacing (see table 3)
685	Upper part of **Knoxville Formation** (Robinson, 1956) (J); part of shale unit (KJ), only near Niles District of Fremont; in East Bay Hills between Hayward and Fremont.	Much shale	h	k-10ft+	c-vc / ?c-m
		Much mudstone and siltstone	h	k-10ft+	c-vc / ?c-m
		Minor to some dirty sandstone	f-h / h	(n-m)4ft+?	(c-m)w
		Minor limestone	h	n-m	c-m
		Some to much clayey sheared rock	f-s	--	c-vc
686	**Knoxville Formation** (J), between Napa Range and Yolo Range and near Mount Diablo.	Not seen in field near Mount Diablo.			
		Almost all is mudstone and shale	h-f / h	(tens to hundreds of ft)	vc / c-m
		Minor sandstone, conglomerate, tuff,	(h)	n(m-k)4ft	c-w
		and limestone	h	n-m	c-m
		Minor to some clayey sheared rock	f-s	--	c-vc
687	Mudstone and siltstone unit (KJ), near Oakland. Includes rocks previously mapped as Knoxville Formation by some workers.	Not seen in field.			
		Most to almost all is mudstone and shale	f-h / h	to 50ft+	c-vc / c-m
		Minor to some dirty sandstone	f-h / (h)	(n-m)k	(c)w
		Minor conglomerate,	h-f, h clasts	--	?(m-w)
		limestone, and concretions	h	to k	c-w
		Some(?) clayey sheared rock	f-s	--	c-vc
688	Shale unit (KJ), in East Bay Hills between Fremont and Oakland and near Dublin.	Most is shale, mudstone, and siltstone	(h)	n-10ft+	c-vc / ?
		Some to much dirty sandstone	f-h / (h)	(n-4ft)10ft?	vc(c)m / (c)m
		Minor to some conglomerate	f, h clasts / (h)f, h clasts	--	m-w
		Some(?) clayey sheared rock	f-s	--	c-vc
689	Predominantly shale unit (KJ), in Diablo Range southeast of San Jose and in Santa Cruz Mountains near Mount Umunhum and Mount Madonna. Includes Knoxville Formation of Crittenden (1951).	Not seen in field near Mount Umunhum.			
		Largely shale, mudstone, and lesser siltstone	(h) / h	n-vk	c-vc / c-m
		Some sandstone	(h) / h	(n-m)6ft+	(c-m)w
		Minor limestone, concretions, siliceous siltstone	(h) / h	(n-m)	c-m
		and conglomerate	(f), h clasts / (h-qf)	--	--
		Some clayey sheared rock	f-s	--	vc-c
700	Unsheared sandstone and shale of **Franciscan assemblage**, in Marin highlands. Consists of hard topography in Franciscan melange (KJ) and in Franciscan sandstone and shale (KJ), as determined by photointerpretation.	Most to almost all is unsheared dirty sandstone	s(f)h / h	n-m, k(10-30ft)100ft+	(vc-m)6ft / (c-m)6ft
		and shale	f-s / h	n(m-k)vk	(c-vc)m / ?
		and minor conglomerate	f-s, f-h clasts / h	(to tens of ft)	(w-4ft)
		Possibly some variably sheared sandstone and shale like unit 803	--	--	--
		Possibly minor severely sheared rock (like unit 800)	f-s, h blocks	--	--
		chert (like unit 511),	--	--	--
		and greenstone (like unit 253)	--	--	--

701	Sandstone and shale of **Franciscan assemblage** (KJ), throughout region. Includes: unit KJfss in Marin and Mendocino highlands; unit gwy only in Marin Peninsula; units fs and fcg in most of Santa Cruz Mountains; unit KJfm in Diablo Range; and units fs, fs_1, and fs_2 in northern Mayacmas Mountains. (See source map, pl. 1, for sources of unit symbols.)	Much is unsheared dirty sandstone.....	s(f)h / h	n-m, k(10-30ft)100ft+	(vc-m)6ft / (c-m)6ft
		and shale.....	f-s / h	n(m-k)vk	(c-vc)m / ?
		and minor conglomerate.....	f-s, f-h clasts / h	(to tens of ft)	(w-4ft)
		Much is variably sheared sandstone and shale like unit 803.....	--	--	--
		Some severely sheared rock like unit 800.....	s-f, h blocks	--	--
702	Flysch-like shale and sandstone of **Franciscan assemblage** (KJ), in Diablo Range and Santa Cruz Mountains. Consists of unit KJfss in Diablo Range and unit fh in Santa Cruz Mountains. (See source map, pl. 1, for sources of unit symbols.)	Not seen in field where mapped.			
		Most is unsheared flysch, consisting of.....	--	(tens to hundreds of ft)	--
		largely shale and siltstone.....	f-s / h	(n-k)10ft	(c-vc)m / ?
		some to much dirty sandstone.....	f-s / h	n-m	vc-m / c-m
		Minor to some dirty sandstone.....	f-h / h	k-30ft+	(vc-m)6ft / (c-m)6ft
		Minor conglomerate with dirty sandstone matrix.....	f-s, f-h clasts / h	? (to k)	?(to w)
		Much rock variably sheared.....	--	--	--
		including some severely sheared rock like unit 800	f-s, h blocks	--	--
703	Metamorphic rocks of **Franciscan assemblage** (KJ), chiefly metagraywacke that is largely unsheared, in northern half of region. Consists of much of unit KJfm throughout northern part of region, as determined by photointerpretation; and unit fms in northern Mayacmas Mountains. (See source map, pl. 1, for sources of unit symbols.)	Most is metagraywacke.....	(f) / h	(n-k)30ft+	(vc-m)w / (c-m)w
		and lesser metashale.....	f-s / h	(vn-m)	(c-vc) / ?
		Minor metagreenstone.....	f-h / h	vk	c-m
		and metachert.....	h	vk	(c-vc)
		Much rock unsheared like unit 700.....	--	--	--
		Much rock variably sheared like unit 803.....	--	--	--
		Some severely sheared rock like unit 800.....	f-s, h blocks	--	--
704	**Franciscan assemblage**, undivided (KJ), in southern half of region.	Largely sandstone and shale like unit 701.	--	--	--
		Much(?) of other rock types, such as			
		sheared rock (like units 800 and 803),	--	--	--
		greenstone (like unit 253),	--	--	--
		chert (like unit 511),	--	--	--
		and serpentinite (like unit 805).	--	--	--
		On Mount Diablo, largely greenstone and chert.			
800	Severely sheared rocks of **Franciscan assemblage** (KJ), throughout region. Consists of soft topography in Marin highlands, as determined by photointerpretation; and high-grade metamorphic rock in places throughout region.	Most is clayey gouge and severely sheared rock.....	s / f-s	--	vc
		Some to much is blocks and shattered small masses..	(h)	--	c-50ft
		of sandstone and shale (like unit 701),	--	--	--
		chert (like unit 511),	--	--	--
		greenstone (like unit 253),	--	--	--
		and schist (as in unit 802).	--	--	--
801	Melange of largely clastic rocks of **Franciscan assemblage** (KJ), throughout region, except where subdivided by photointerpretation in Marin highlands.	Much to most is matrix of gouge and severely sheared rock.....	s / f-s	--	vc
		with abundant blocks and small masses of various rock types (like unit 800).....	(h)	--	c-50ft
		Some to most is large masses of sandstone and shale	--	--	--
		much to most unsheared like unit 700.....	--	--	--
		much variably sheared like unit 803.....	--	--	--

Abbreviated unit descriptions of hillside materials

Map unit (see pls. 1-6)	Geologic unit, (age), and location (see discussion in text)	Composition (see discussion in text; fig. 2)	Physical properties (see discussion in text): Hardness (see tables 2,3)	Bedding thickness (see table 3)	Fracture spacing (see table 3)
802	Melange of metamorphic rocks of **Franciscan assemblage** (KJ), in northern half of region. Consists of parts of unit KJfm, as determined by photointerpretation; and unit fmsr in northern Mayacmas Mountains. (See source map, pl. 1, for sources of unit symbols.)	Much to most is gouge and severely sheared rock....	s / f-s	--	vc
		with abundant blocks and small masses of various rock types (like unit 800).....	(h)	--	c-50ft
		Minor to most is large masses of metamorphic rock, chiefly metagraywacke, like unit 703.....	--	--	--
803	Variably sheared sandstone and shale of **Franciscan assemblage** (KJ), in Marin highlands. Consists of intermediate topography in melange (unit KJfs) and in sandstone and shale (unit KJfss), as determined by photointerpretation; and unit gwy outside of Marin Peninsula. (See source map, pl. 1, for sources of unit symbols.)	Much to most is shattered or brecciated sandstone and shale.....	(f-s) / (h)	to hundreds of ft	(vc-m)6ft
		Much unsheared and unshattered sandstone and shale (like unit 700) as small masses.....	--	to 1000ft	--
		Some gouge and severely sheared rock that may have blocks (like unit 800).....	s, h blocks c-vw / s-f, h blocks	to tens of ft	vc-50ft
804	Variably sheared metagreenstone of **Franciscan assemblage** (KJ), in Marin highlands. Consists of parts of Franciscan metagreenstone having intermediate topography, as determined by photointerpretation.	Largely metagreenstone (like unit 254), most variably sheared and shattered.....	(f-s)h / (h)	--	(c-vc)
		some unsheared like unit 254.....	(f-s)h / (h)	--	vc (c-m)w
		Some severely sheared rock like unit 800.....	f-s, h blocks	to tens of ft	--
805	Sheared serpentinite, throughout region. Consists of parts of serpentinite, as determined by photointerpretation; sedimentary serpentine member of **Knoxville Formation** (J), in northern part of region; and metamorphosed ultramafic rocks, in northern Mayacmas Mountains.	Most is sheared serpentinite.....	(s)f	--	vc
		including abundant blocks of serpentinite, ultramafic rocks, and other rock types.....	h	(to 10ft)100ft	(to 10ft)
		Some clayey gouge with blocks (as in unit 800).....	s-f, h blocks c-50ft	to tens of ft	vc-vw
		Minor silica-carbonate rock (like unit 910).....	(h)	--	c-10ft+
900	Largely unsheared ultramafic rock and serpentinite. Consists of parts of serpentinite throughout region, as determined by photointerpretation.	Not seen in field.			
		Largely unsheared ultramafic rocks and serpentinite.	? / h	--	(m-w)10ft
		Some sheared serpentinite like unit 805.....	s-f, h blocks	--	--
901	Ultramafic rock (J), in Mendocino highlands.	Most(?) is unsheared ultramafic rocks, partially serpentinized.....	(h) / h	--	(m-w)vw
		Some to much sheared rock, some with hard blocks...	f-s, h blocks w-vw	--	vc-m

902	Diabase and gabbro (J), only in Mendocino highlands and Mayacmas Mountains.	Most to almost all is unsheared diabase and gabbro	s-f, h-f blocks(m)w / h	--	(c-m)w
		Minor to some(?) sheared rock like unit 800.....	--	--	--
903	Diabase, only near Vallejo.	Not seen in field.			
		Diabase, holocrystalline.....	? / h	--	to m+?
		some(?) sheared as in unit 905.....	--	--	--
904	Diabase, only near Mount Diablo.	Most is unsheared holocrystalline diabase, largely(?) sheeted.....	fas(f)h / h	k(5-15 ft)20ft	(vc-m)w
		Some pillow basalt as in unit 253.....	--	--	--
		Minor(?) sheared rock, some like unit 800.....	--	--	--
		some (sheared diabase) between sheets.....	f	vn-n	vc
905	Diabase, only east of Santa Clara Valley near Coyote and near Lexington Reservoir in Santa Cruz Mountains.	Diabase.....	s / h	--	(c-m)w
		some to much sheared and partially serpentinized.	f-s, h blocks(m-w)4ft	--	(c-vc)
906	Granitic rocks (K), only on Point Reyes peninsula and Bodega Head.	Almost all is granitic rocks with aplite and pegmatite dikes and mafic inclusions.....	f-s, h blocks / h	--	(c-m)6ft
		Minor schist, marble, and quartzite like unit 908..	--	--	--
		Minor sheared granitic rock including clayey gouge.	f-s	(n)k	--
907	Granitic rocks (K), only near Montara Mountain in northern Santa Cruz Mountains.	Almost all is granitic rock with aplite and pegmatite dikes.....	s, h blocks m-w / h	--	(c-m)w+?
		Minor marble, hornfels, and schist like unit 908...	--	--	--
		Rare sheared granitic rock including clayey gouge..	f-s	(n)	--
908	Metamorphic rocks (pre-Cretaceous) only on Point Reyes peninsula.	Briefly seen in field.			
		Marble, quartzite, and schist.....	h-s / h	--	(c-m)w
909	Limestone of **Franciscan assemblage** (KJ), in Santa Cruz Mountains. Includes Calera Limestone of Lawson (1902).	Largely limestone.....	h	m-k,vk-tens of ft	c-vw
		Minor to some chert.....	h	n-m	c-vw
910	Silica-carbonate rock, throughout region.	Largely silica-carbonate rock.....	(h)	--	c-10ft+
		Some sheared serpentinite like unit 805.....	--	--	--
911	High-grade metamorphic rocks of **Franciscan assemblage** (KJ), in northern Mayacmas Mountains. Consists of much of metasandstone (unit fsm) and high-grade rocks (unit fm) of McLaughlin (1978).	Not seen in field where mapped.			
		Most is foliated high-grade metamorphic rock.....	h-f / h	--	m-vw
		Some to much(?) severely sheared rock like unit 800.....	f-s, h blocks	--	--
Faults and landslides	Mapped faults and large landslide deposits, through region. Landslides are incompletely shown (see map on pl. 1).	Like underlying or adjacent units except sheared, shattered, or otherwise modified by movement. Fractures generally more closely spaced and more open than elsewhere; weathered rock may extend deeper than elsewhere. Includes minor to much gouge and severely sheared rock like unit 800.	--	--	--

DETAILED UNIT DESCRIPTIONS

[Refer to text, figures 2-4, and tables 1-4 for discussion and explanation of terms. See plate 7 for location of free-swell samples]

MAP UNIT 100

Geologic unit, (age), and location: Gravel deposits (Q), in Napa Valley and Sonoma Valley areas.

Summary: Conglomerate of hard volcanic clasts as much as 1 ft in diameter in soft matrix, and interbedded sandstone and claystone. Claystone and some mantle is severely expansive.

Composition: Largely conglomerate of rounded volcanic clasts as large as 1 ft in diameter, mostly about 3 in. in diameter, in poorly sorted sand, silt, and clay matrix that is mostly clay clogged, but is porous in part. Clay is from pumice and tuffaceous fragments in matrix, and so is variably abundant. Interbedded with conglomerate is sandstone, some of which is tuffaceous. Also present are intervals of poorly sorted sandy and silty claystone that may constitute as much as 30 percent of unit.

Hardness: Clasts in conglomerate are largely hard, rarely firm, in matrix that is soft and friable where weathered. Sandstone is soft and friable, but tuffaceous sandstone is firm where weathered. Claystone is soft where weathered.

Bedding: Distinct bedding of very thick (10- to 20-ft) intervals of conglomerate, sandstone, and claystone; thin to thick distinct lenticular beds and crossbeds within intervals of sandstone and conglomerate.

Parting: Largely absent.

Fracture: Absent in conglomerate and sandstone; moderate to close spacing in tuffaceous sandstone. Weathered claystone develops shrinkage cracks.

Permeability: Conglomerate and sandstone, where shallow, have mostly low intergranular permeability, some moderate; probably much moderate below shallow rock. Tuffaceous sandstone has low intergranular permeability, claystone very low. Thus, shallow bedrock largely low, some moderate, some very low; probably much moderate below shallow rock. Mantle probably largely moderate, some to much low to very low.

Weathering: To depth of more than 10 ft in conglomerate and sandstone. Probably to depth of about 5 ft in claystone.

Surficial mantle: Probably largely granular, some to much clayey. Rocky.

Expansivity: Bedrock and mantle are largely unexpansive to possibly significantly expansive, some of each severely expansive (claystone and mantle on claystone). Sample CA11, sandy silty claystone, free swell 150 percent.

Stratigraphic thickness: Probably tens of feet to more than 100 ft.

Sources: K.F. Fox, oral commun., 1972-73; Fox and others, 1973; two stations.

MAP UNIT 101

Geologic unit, (age), and location: Santa Clara Formation, undivided (QT), in San Francisco Peninsula and Santa Clara Valley areas.

Summary: Largely conglomerate; some sandstone, siltstone, and claystone. Some bedrock and much to most mantle is significantly expansive; minor bedrock and some mantle may be severely expansive. See units 102-107 (mapped facies of Santa Clara Formation).

Composition: Largely conglomerate; some sandstone, siltstone, and claystone; rare lignite and limestone. Conglomerate consists of cobbles in poorly sorted matrix of sandstone or siltstone; locally contains boulders as large as a few feet in diameter. Sandstone is fine to coarse grained.

Hardness: Firm to soft, conglomerate clasts hard, where fresh and weathered.

Bedding: Distinct to indistinct lenticular beds that range from medium to very thick (30 ft?), commonly a few feet thick.

Parting: On some bedding planes.

Fracture: Largely absent in conglomerate; close to moderate spacing in other compositions.

Permeability: Bedrock has largely low intergranular permeability, some moderate, some very low. Mantle largely moderate, some low to very low.

Surficial mantle: Largely granular, some clayey; generally clayey subsoil on gentle slopes.

Expansivity: Most bedrock is unexpansive, some significantly expansive, probably minor severely expansive (claystone). Much to most mantle is significantly expansive, some may be severely expansive, remainder unexpansive. See samples for units 102-107.

Stratigraphic thickness: 2,200 ft in type section at Stevens Creek (Dibblee, 1966).

Sources: Bailey and Everhart, 1964; Branner and others, 1909; California Department of Water Resources, 1967; California State Water Resources Board, 1955; Cummings, 1968, 1972; Davis and Jennings, 1954; Dibblee, 1966; Ellen and others, 1972; Pampeyan, 1970; 19 stations over entire Santa Clara Formation (units 101-107).

MAP UNITS 102-107

Geologic units, (age), and location: Santa Clara Formation (QT), facies mapped by Cummings (1972) in San Francisco Peninsula and Santa Clara Valley areas: Corte Madera facies (map unit 102), Arastradero facies (map unit 103), Woodside facies (map unit 104), Stevens Creek facies (map unit 105), Los Gatos facies (map unit 106), Searsville facies (map unit 107).

Summary: Each of the six facies is largely conglomerate, but they vary in composition of clasts and in proportions of finer grained compositions. Much mantle is expansive. See also unit 101 (undivided Santa Clara Formation).

Composition: Corte Madera facies (unit 102)—Largely conglomerate, some fine sandstone and siltstone, minor claystone and calcite-cemented sandstone. Cobbles in conglomerate are mainly graywacke, but include numerous clasts of the Cretaceous conglomerate found in the Los Gatos facies, as well as granitic and porphyritic cobbles derived from that conglomerate. Conglomerate is poorly sorted and contains hard to firm clasts that generally range from granules to cobbles (as large as 1 ft in diameter); larger clasts are subrounded, smaller clasts more angular. Clasts are supported in silt and sand matrix, which also is poorly sorted. In places toward the northwest extent of this unit, interbedded fine sandstone, siltstone, and minor (but significant) claystone predominate over conglomerate. In the southeast, this unit is coarse conglomerate that contains boulders as large as 5 ft in diameter (Cummings, 1968). Some sandstone is calcite cemented. Rare lignite.

Arastradero facies (unit 103)—Not seen in field. Largely conglomerate, some sandstone, minor(?) silty claystone. Conglomerate consists of subangular to subrounded clasts as much as 6 in. in diameter in matrix of moderately well sorted fine sand; clasts consist of red chert, graywacke, arkosic sandstone, laminated brown siliceous shale, and porphyritic silicic volcanic rock. Lenses of silty claystone and of sandstone similar to conglomerate matrix are intercalated with conglomerate. Sandstone probably makes up about one-third of unit and occurs in significant amounts in most exposures.

Woodside facies (unit 104)—Not seen in field. Largely conglomerate; probably includes some interbedded sandstone, siltstone, and (or) claystone. Conglomerate is composed almost entirely of angular to subangular clasts of firm arkosic sandstone; matrix is probably sandy and silty.

Stevens Creek facies (unit 105)—Largely conglomerate, minor clayey fine sandstone and claystone. Rather homogeneous, very thick bedded conglomerate of angular to subangular pebbles and cobbles of hard, fresh graywacke and greenstone supported by a poorly sorted matrix that consists of clay, silt, and sand (in order of abundance). Clay is the cementing agent throughout. Basal part of unit is very clayey, and dense claystone commonly forms the base (Tolman, 1934). Clayey fine sandstone and claystone occur rarely in beds and lenses that are a few inches to 6 ft thick.

Los Gatos facies (unit 106)—Not seen in field. Largely conglomerate, some fine sandstone, possibly minor claystone. Conglomerate is similar to that of the Arastradero facies, but also includes clasts of granite and porphyritic rock and large cobbles of a hard Cretaceous conglomerate that contains clasts of granite and porphyry. Matrix and distinct beds of sandstone consist of fairly clean, moderately sorted fine sand containing some silt, similar to Arastradero facies. Sandstone probably makes up less than 25 percent of unit.

Searsville facies (unit 107)—Largely conglomerate, some sandstone, some siltstone, minor claystone. Conglomerate consists of subangular clasts as large as 8 in. in diameter in matrix of silt, clay, sand, and iron oxide; clasts are mainly greenstone, but include graywacke and arkosic sandstone. Includes significant amount (one-fourth?) of poorly to moderately sorted pebbly to clayey sandstone. Unit is deeply weathered.

Hardness: Where fresh, conglomerate clasts are largely hard, firm in Woodside facies; many to most clasts weather soft in Searsville and Woodside facies. Matrix and interbedded materials are firm to soft in Stevens Creek and Searsville facies and probably in Woodside facies, soft in other facies.

Bedding: In Stevens Creek and Corte Madera facies, conglomerate occurs in massive, very thick beds (as much as several hundred feet in Stevens Creek facies); in other facies, probably most conglomerate also occurs as massive, very thick beds. All facies, except Stevens Creek and Woodside facies, have significant sequences of soft to firm sandstone and siltstone as thick as 40 ft or more. Corte Madera facies contains thin seams of claystone along which springs emerge and landslides occur.

Parting: Largely absent. In fine sandstone and siltstone of Searsville facies, weathering produces parting parallel to bedding at very close spacing.

Fracture: Absent in conglomerate; close to moderate spacing in sandstone and siltstone.

Permeability: Bedrock permeability is intergranular and extends to depth. Corte Madera facies (unit 102)—Conglomerate moderate, locally high; sandstone low, some moderate; siltstone very low to low. Thus, most bedrock moderate, locally high, some low to very low. Mantle probably largely moderate, some low to very low. Arastradero facies (unit 103)—Probably most bedrock moderate, locally high, some low to very low. Probably most mantle moderate, some low to very low. Woodside facies (unit 104)—Probably most bedrock low, some possibly moderate, some very low (bedrock not observed). Probably most mantle moderate, some low. Stevens Creek facies (unit 105)—Bedrock low to very low. Mantle probably largely moderate, some low. Los Gatos facies (unit 106)—Bedrock probably moderate to low. Probably most mantle moderate, some low. Searsville facies (unit 107)—Bedrock very low to low where weathered, probably largely low where fresh. Probably much mantle moderate, much low to very low.

Weathering: Arastradero and Los Gatos facies are weathered to depths greater than 10 ft, possibly much greater; no outcrops or roadcut exposures observed in these units. Stevens Creek facies is weathered to depths of a few feet to perhaps 10 ft. Searsville facies is weathered to depths of many tens of feet; weathered material is clayey, iron stained throughout, and clasts are weathered soft; some weathering in all exposures observed.

Surficial mantle: Probably largely granular, some clayey, except in Searsville facies probably much granular, much clayey. Generally clayey subsoil on gentle slopes.

Expansivity: Most bedrock is unexpansive, some significantly expansive, minor severely expansive (claystone) in Searsville facies at least. Much to most mantle is probably significantly expansive in all facies; some to much is severely expansive in Searsville and Arastradero facies, minor may be severely expansive in other facies; remainder unexpansive. Samples:

Corte Madera facies (unit 102): MH13A, matrix of conglomerate, free swell 60 percent; MH14B, shaly bedrock, free swell 72 percent; MH13B, stony sandy silty soil, uncracked, typical, free swell 50 percent; MH13C, uncracked soil, free swell 61 percent; MH14A, soil, free swell 75 percent; MH14C, stony sandy clay soil, moderately cracked, free swell 60 percent.

Arastradero facies (unit 103): PA14, black soil 3 ft thick, free swell 101 percent; PA50A, stony sandy silty soil, typical, free swell 80 percent; MH17, sandy silty soil, typical, free swell 44 percent; PA53, sandy silty clay soil, cracked, free swell 90 percent.

Woodside facies (unit 104): WO19, well-cracked dark sandy clay soil, free swell 71 percent.

Stevens Creek facies (unit 105): CUP3, mildly cracked silty sandy soil, typical, free swell 59 percent.

Los Gatos facies (unit 106): LOG6, sandy silty clay soil, mildly cracked, typical, free swell 54 percent; LOG7, pebbly sandy silty soil, free swell 55 percent; CRR1, pebbly sandy silty soil, typical, free swell 46 percent.

Searsville facies (unit 107): PA9B, bedrock, free swell 83 percent; PA12, weathered bedrock, free swell 58 percent; PA36, weathered pebbly sandstone, free swell 60 percent; PA9A, soil, free swell 146 percent; PA37, adobe soil, free swell 154 percent; PA48, stony clayey silty soil, cracked, probably typical, free swell 69 percent; PA49, sandy silty clay soil, mildly to moderately cracked, typical, free swell 79 percent; PA56, dark sandy silty clay soil, typical, free swell 82 percent.

Stratigraphic thickness: Stevens Creek facies (unit 105), 2,200 ft (Dibblee, 1966); Corte Madera facies (unit 102), about 1,800 ft at Coal Mine Ridge (Ellen and others, 1972).

Sources: Cummings, 1968, 1972; Dibblee, 1966; Ellen and others, 1972; Tolman, 1934; 19 stations over entire Santa Clara Formation (units 101-107).

MAP UNITS 108, 116, 117

Geologic units, (age), and location: Ohlson Ranch Formation of Higgins (1960) (T); undivided (map unit 116); sandstone member (map unit 117); conglomerate member (map unit 108); in Mendocino highlands.

Summary: Largely soft, very fine grained sandstone deposited on old ridgetop marine-terrace surfaces. Bedrock has moderate permeability and is deeply weathered. Bedrock and mantle are unexpansive.

Composition: Unit 116 is largely very fine grained sandstone of angular grains that contains as much as 15 percent silt matrix. Includes minor to some conglomerate; some to much is poorly sorted and clayey, some to much (generally near basal contact) has well-sorted sandstone matrix. Also includes poorly sorted, clayey, coarse-grained sandstone near base; two known occurrences of volcanic tuff; and local carbonate concretions in fresh bedrock. Siltstone and mudstone probably rare. Unit 117 is almost all sandstone; unit 108 is largely conglomerate.

Hardness: Soft, except for hard concretions and conglomerate clasts.

Bedding: Largely absent, but close inspection reveals indistinct, thin to very thin beds of differing grain size accentuated by iron staining.

Parting: Absent.

Fracture: Fractures are inconsequential to strength of rock and are distinguished by iron staining that varies in thickness and degree of cementation; cemented fractures are soft, but harder than surrounding sandstone. Major fractures at moderate to wide (0.5-1 ft) spacing have relatively thick zones of staining and cementation; superimposed random fractures at close to very close spacing have thinner zones of staining.

Permeability: Most bedrock has moderate intergranular permeability; probably includes minor to some low permeability where content of fines is greater, probably minor to some high where coarser sand predominates. Mantle moderate.

Weathering: Iron-stained fractures at close to very close spacing extend to depths of more than 50 ft; rock between fractures is white and appears unweathered. Concretions absent in weathered rock.

Surficial mantle: Granular.

Expansivity: Bedrock and mantle unexpansive. Sample SP6, typical sand soil, free swell 17 percent.

Stratigraphic thickness: Entire unit generally less than 100 ft, locally as much as 300 ft.

Sources: Higgins, 1960; two stations.

MAP UNIT 110

Geologic unit, (age), and location: Montezuma Formation (Q), only in Montezuma Hills.

Summary: Largely clayey and silty sandstone and siltstone that is firm to soft; some clean sandstone, pebble conglomerate, and claystone. Some bedrock and probably much mantle are severely expansive.

Composition: Largely clayey sandstone, silty sandstone, and siltstone; some clean sandstone and pea gravel at least in the general vicinity of Rio Vista. Also includes less abundant sandy and silty claystone, tuffaceous siltstone and fine sandstone, and conglomerate. Clayey sandstone is medium to very fine grained and clay saturated or nearly so. Silty sandstone is fine to very fine grained. Clean sandstone is generally coarse grained, but varies from medium grained to grit in which clasts are as large as 0.15 in. in diameter. Rare pieces of sandstone are calcite cemented. Conglomerate consists of pebbles and very coarse grained sand, except near western margin of exposure near unit 124, where hard cobbles are as large as 5 in. in diameter.

Hardness: Clayey sandstone and siltstone are firm to soft where weathered, probably firm where fresh. Silty sandstone and clean sandstone are soft. Rare calcite-cemented sandstone is hard; sandy claystone firm. Unit is generally firm to soft, both where fresh and weathered.

Bedding: Most exposures are unbedded. Where bedding does occur, it is distinct, thin to very thick (more than 4 ft), and shows much thin to thick interbedding. Clean sandstone and pebble conglomerate are commonly indistinctly laminated and cross laminated. Calcite-cemented sandstone probably in medium beds.

Parting: At bedding planes; also crude parting at moderate spacing in tuffaceous siltstone. Not pronounced in this unit.

Fracture: Clayey sandstone and siltstone have close to moderate spacing, and particularly the fine-grained clayey compositions have close to very close spacing of weathering fracture. Silty sandstone is largely unfractured, but some produces close spacing of weathering fracture. Clean sandstone is generally unfractured, but some has moderate to wide spacing. Tuffaceous sandstone and siltstone have close, possibly moderate, spacing. Hard calcite-cemented sandstone has moderate to wide spacing.

Permeability: Intergranular permeability of clayey sandstone low, rarely moderate; clayey siltstone low to very low; silty fine sandstone low; clean sandstone largely high, some moderate; sandy and silty claystone very low; tuffaceous siltstone and fine sandstone low to very low; conglomerate unknown, but some grit of high permeability is associated with clean sandstone. Thus, most bedrock has low intergranular permeability, some very low, some moderate to high at least in vicinity of Rio Vista. Most surficial mantle low to very low, some moderate.

Weathering: All exposures are weathered to depths greater than 8 ft. Caliche on fractures in weathered zone in much of unit.

Surficial mantle: Most is clayey, some granular.

Expansivity: Bedrock is largely unexpansive, but minor to some (claystone) is severely expansive and much clayey sandstone may be significantly expansive. Probably 50-75 percent of surficial mantle is expansive, much of this severely expansive. Bedrock samples: DN8, silty claystone, free swell 112 percent; BL4B, weathered sandy claystone, free swell 110 percent. Surficial mantle samples: BL5, loam soil, free swell 120 percent; BL4A, subsoil, free swell 88 percent; RV5, sandy clay soil, free swell 93 percent; DN7, dark sandy clay soil, typical, free swell 107 percent; RV1, clayey soil, free swell 138 percent. Many fence posts and telephone poles are tilted by soil creep. In places, unexpansive surface soil overlies expansive subsoil.

Sources: Sims and others, 1973; 17 stations.

MAP UNIT 111

Geologic unit, (age), and location: Sedimentary rocks (QT), only near the Mission San Jose District of Fremont.

Summary: Largely clayey sandstone; some clean sandstone, mudstone, and lesser conglomerate. Rock is soft where weathered. Much mantle is severely expansive.

Expression in aerial photographs: Intermediate topography, some subtly ribbed; minor resistant outcropping beds.

Composition: Largely medium-grained sandstone that is saturated to nearly saturated by clay and lesser silt. Some of unit consists of clean, fine- to coarse-grained sandstone; mudstone; and lesser conglomerate that has clasts as large as 1 in. in diameter, much of which is clean and well sorted.

Hardness: Soft where weathered, except hard clasts in conglomerate.

Bedding: Indistinct lenticular beds, thick to very thick (10 ft); thick lenses of clean conglomerate.

Parting: Largely absent.

Fracture: Largely absent; close to very close spacing of weathering fracture in mudstone.

Permeability: Bedrock has largely low intergranular permeability, some very low, some moderate, minor high (clean conglomerate). Much to most mantle low to very low, probably much moderate.

Weathering: To depths of more than 30 ft.

Surficial mantle: Much to most clayey (like sample NL18), probably much granular.

Expansivity: Most bedrock (clayey sandstone and mudstone) may be significantly expansive (see sample CR37 of unit 151 and samples CR19A and CR19B of unit 152). Much mantle is severely expansive, the remainder unexpansive to significantly expansive. Sample NL18, moderately cracked sandy clay soil, typical of more expansive soil, free swell 96 percent. See units 121, 122, 151, and 152 for additional information.

Sources: California State Water Resources Board, 1963; California Department of Water Resources, 1967; one station.

MAP UNIT 112

Geologic unit, (age), and location: Merced Formation (QT), only in Santa Clara County near Palo Alto.

Summary: Largely clean, soft, fine-grained sandstone of moderate permeability. Much mantle severely expansive. See more detailed description for unit 113.

Composition: Most is sandstone, clean, well sorted, fine grained, glauconitic at least in part. Probably some siltstone or claystone.

Hardness: Soft, locally approaching firm, where weathered and probably where fresh.

Bedding: None noted, probably very thick (5-30 ft) where present.

Parting: Probably absent.

Fracture: Close to moderate spacing, some iron stained; fracture has no effect on strength of weathered rock.

Permeability: Largely moderate intergranular permeability in bedrock. Probably much mantle moderate, much low to very low.

Weathering: To depths of more than 10 ft.

Surficial mantle: Texture uncertain, probably much granular, much clayey. Sample PA50B, sandy silty soil, is typical, but free-swell test suggests significant clay content.

Expansivity: Bedrock largely unexpansive, but claystone, if present, may be severely expansive (see unit 113). Much mantle severely expansive. Sample PA50B, typical mildly cracked soil, free swell 93 percent.

Sources: Dibblee, 1966; Pampeyan, 1970; one station.

MAP UNIT 113

Geologic unit, (age), and location: Merced Formation (QT), only in San Mateo County and San Francisco.

Summary: Largely sandstone, much siltstone and claystone, and minor hard cemented rock. Materials are largely soft to firm. Some bedrock (claystone) and some mantle are severely expansive.

Composition: Largely sandstone; much siltstone and claystone; minor conglomerate, volcanic ash, and cemented shell breccia. Sandstone is medium to very fine grained, in places conglomeratic; much is clean, much silty or clayey. Volcanic ash is white and clean and consists largely of fresh glass shards of fine sand and silt size. Proportion of sandstone to finer grained materials is about 2:1 in the Westlake area of Daly City and generally somewhat lower in other places.

Hardness: Where fresh, sandstone is commonly firm, in places soft, but hard at and within several inches of shell horizons; where weathered, it is commonly soft and friable. Siltstone and claystone are firm; shell breccia and some conglomerate well cemented and hard; volcanic ash soft and friable.

Bedding: Sandstone occurs in very thick (about 5- to 30-ft) beds that are commonly indistinct, in places distinct. Beds in many places are lenticular, and many show large-scale internal crossbedding. Siltstone and claystone occur in thin to very thick beds that are in many places internally laminated and in places internally crosslaminated; in the Westlake area of Daly City, siltstone and claystone occur in zones as thick as 200 ft. Conglomerate commonly occurs in lenses as thick as 4 ft. Beds of volcanic ash and shell breccia are as thick as 6 ft.

Parting: None observed.

Fracture: Sandstone is commonly fractured at moderate to very wide spacing. Siltstone and claystone have close spacing in weathered exposures.

Permeability: Most bedrock has moderate to low intergranular permeability, some very low. Probably much mantle moderate, much low to very low.

Weathering: Sandstone is gray where fresh, yellowish gray to yellowish orange where weathered. Siltstone and claystone are medium to dark gray where fresh, light gray where weathered.

Surficial mantle: Clayey to granular, probably much of each. Much(?) clayey subsoil.

Expansivity: Most bedrock is unexpansive, but some is severely expansive (claystone), and some is significantly expansive. Probably much mantle unexpansive, much significantly expansive, some severely expansive. Bedrock samples: SFS5A, claystone from 15-ft bed, free swell 113 percent; SFS5B, claystone interbed, free swell 169 percent; MM21, sandstone, free swell 69 percent; MM22, weathered silty claystone, free swell 70 percent. Surficial mantle samples: MM15, slightly cracked silty clay soil, free swell 42 percent; MM16, very slightly cracked silty clayey soil, free swell 55 percent; SFS6, soil, free swell 45 percent.

Stratigraphic thickness: About 5,000 ft in type section along sea cliff north of Mussel Rock.

Source: Ellen and others, 1972.

MAP UNIT 114

Geologic unit, (age), and location: Merced Formation (QT), only near Bolinas.

Summary: About half clean and slightly silty sandstone and half silty sandstone and siltstone. Rock is firm where fresh and mostly soft and friable where weathered. Moderate permeability in clean sandstone.

Composition: Largely very fine grained to fine-grained sandstone that has variably silty matrix, ranging from clean to silt clogged; lesser interbedded sandy siltstone. Sand consists of angular to subrounded grains. Minor scattered carbonate-cemented concretions, fossiliferous horizons, and pebble conglomerate. Toward northern limit of exposure, some beds are more poorly sorted and contain abundant clay. Probably half is clean and slightly silty sandstone, half silty sandstone and siltstone.

Hardness: Firm where fresh; mostly soft and friable, in places firm, where weathered. Concretions hard.

Bedding: Indistinctly bedded in thick to very thick (30-ft) beds; many beds are indistinctly internally laminated and cross laminated. Concretions are irregular, medium to thick, and as long as 10 ft parallel to bedding.

Parting: Absent.

Fracture: Mostly moderate to wide spacing, some very wide (5 ft), where fresh. Where weathered, some sandstone fractures at close to moderate spacing, but within 1-2 ft of the ground surface spacing becomes close to very close in places. Spacing in weathered siltstone in places is very close. Many fractures are iron stained and cemented.

Permeability: Intergranular permeability is moderate in clean sandstone, becoming low in silty sandstone and siltstone and possibly very low in clayey beds. About half of bedrock has moderate intergranular permeability, about half low. Mantle largely moderate.

Weathering: To depth of 40 ft in seacliffs, controlled by composition.

Surficial mantle: Largely granular. Soil consists of silt and fine sand.

Expansivity: Bedrock and surficial mantle are largely unexpansive, but some mantle is significantly expansive. Surficial mantle samples: B018, A-horizon soil, free swell 51 percent; B019, organic-rich soil, free swell 31 percent; B020, soil, free swell 45 percent.

Stratigraphic thickness: In this fault-bounded patch, minimum thickness is about 550 ft.

Sources: J.A. Bartow, written commun., 1972; Blake and others, 1974; Galloway, 1977; Gluskoter, 1962; Martin, 1916; Wahrhaftig, 1970; five stations.

MAP UNIT 115

Geologic unit, (age), and location: Wilson Grove Formation (T), in Blucher Hills area, southwest of Santa Rosa.

Summary: Largely very fine grained to fine-grained sandstone that has variably abundant silt and, to lesser degree, clay matrix; sandstone ranges from clean to saturated by silt and clay. Much bedrock has moderate permeability. Some bedrock and much mantle are significantly expansive.

Composition: Most is very fine grained to fine-grained sandstone that has variably abundant silt and, to lesser degree, clay matrix; sandstone ranges from clean, containing less than 5 percent silt, to saturated by silt and (or) clay. Clean sandstone and silt- or clay-saturated sandstone are present in about equal proportions, although much sandstone falls between these extremes. These sandstones are interbedded with one another and also with very fine sandy siltstone, clayey sandstone, sandy claystone, and rare claystone (probably weathered tuff). Much sandstone has some tuffaceous components, especially in eastern part of area. Unit also contains a bed of pumiceous lapilli tuff and tuff breccia. Highly fossiliferous beds occur locally. Sandstone, especially in western part of area, contains hard calcareous concretions.

Conglomerate occurs both at base of unit and within a gravelly facies. Basal conglomerate generally consists of very coarse grained sandstone and pebble conglomerate (pebbles mostly granules but rarely as large as 1 in. in diameter) that have a variably clayey and silty very fine grained sand matrix that fills all pores. Near mouth of Mark West Creek, however, basal conglomerate about 50 ft thick contains hard pebbles and cobbles that are commonly as large as a few inches in diameter, as well as less common boulders as large as 1 ft in diameter. Basal conglomerate is most abundant and well exposed in western part of outcrop area, where it generally ranges from a few feet to perhaps 20 ft in thickness, although locally it is as thick as 100 ft. The gravelly facies occurs toward the eastern edge of outcrop area, in the vicinity of Sebastopol. Gravel within this facies occurs as trains within sandstone and as conglomerate saturated by silty and clayey sandstone matrix. Clasts are mostly about 0.25 in. in diameter; 95 percent are less than 1 in. in diameter, and a minor proportion are as large as 2 in.

Hardness: Clean sandstone is firm to soft and friable where fresh, weathering to soft and friable. Silty and clayey sandstone is mostly firm where fresh; some weathers soft, but much silty sandstone and siltstone remain firm where weathered. Conglomerate is similar in hardness to sandstone, except clasts are hard. Concretions are hard, and local highly fossiliferous beds may be hard. Tuff and tuff breccia are firm but tough, approaching hard in places; weathered tuff is soft.

Bedding: Clean and dirty sandstone is indistinctly interbedded in medium to very thick (as much as 30-ft) beds, mostly thick to as much as 10 ft. Indistinct internal lamination and cross lamination is present in much sandstone. Local highly fossiliferous beds are thin to thick; concretions are as much as 6 ft in length and 1 ft in thickness. Basal conglomerate mostly occurs in very thick, unbedded bodies, but near mouth of Mark West Creek much is irregularly interbedded with sandstone and clayey rock. Conglomerate within the gravelly facies occurs in irregular, some crossbedded, thin to thick beds between thin to very thick (5-ft) beds of sandstone. The bed of tuff and tuff breccia is generally less than 15 ft thick, but near mouth of Mark West Creek it is as thick as 50 ft.

Parting: Mostly absent, but present on some bedding planes (where clayey interlayers are present).

Fracture: Most fresh sandstone has wide to very wide (10-ft) spacing to absent or occasional fracture, but near faults fracture spacing may be moderate or even close. Silty and clayey sandstone generally produces additional fracture where weathered, commonly at close spacing, and commonly scales from cut faces at very close to close spacing. Spacing in tuff and tuff breccia ranges from moderate to very wide, largely wide, and some weathered rock has close-spaced and very close spaced fractures. Concretions are fractured at moderate to wide spacing.

Permeability: Intergranular permeability of clean sandstone is mostly moderate; some high permeability possibly occurs in medium-grained sandstone interbedded with gravel in the gravelly facies, and high permeability is suggested near highly fossiliferous beds. Intergranular permeability of silt- and clay-saturated sandstone is low to very low, of tuff and tuff breccia very low to low. Thus, much bedrock has moderate intergranular permeability, much low, some very low, minor high particularly in irregular beds near eastern margin. (Well yields in entire unit average 100-1,500 gal/min. Problems caused by fine sand in wells.) Much mantle moderate, much low, some very low.

Weathering: Generally extends to depths of 10-20 ft, but depth depends strongly on grain size; finer grained beds remain fresh near ground surface, clean beds weather to greater depths.

Surficial mantle: Much granular; much clayey, largely as clay-saturated to nearly clay-saturated red subsoil that is widely developed in eastern part of outcrop area.

Expansivity: Most bedrock is unexpansive, some significantly expansive (claystone and clayey sandstone). Much mantle is significantly expansive, particularly subsoil. Bedrock samples: SB2A, silty claystone, free swell 50 percent; TR4, very fine sandy claystone in slump, free swell 70 percent; CO1D, clayey sandstone, free swell 74 percent; CO1E, weathered ash (clayey sand), minor, free swell 72 percent. Surficial mantle samples: SB2B, soil, free swell 46 percent; CO1A, subsoil, free swell 64 percent; CO1B, organic A-horizon soil, free swell 51 percent; CO1C, organic soil, free swell 39 percent; VF4, subsoil on clayey sandstone, typical at this station, free swell 70 percent; CM2, organic soil, free swell 39 percent; CM3, red clayey subsoil on clayey sandstone, free swell 39 percent.

Stratigraphic thickness: Exposed thickness generally less than 300 ft, but as much as 500 ft (Weaver, 1949). Total deposited thickness not more than 1,500 ft (Johnson, 1934); as much as 2,000 ft, including that concealed by younger deposits in Santa Rosa Valley (Cardwell, 1958); maximum 2,100 ft locally (J.A. Bartow, written commun., 1972).

Sources: J.A. Bartow, written commun., 1972; Blake and others, 1971, 1974; Cardwell, 1958; Dickerson, 1922; Fox, 1983; Gealey, 1951; Johnson, 1934; Sarna-Wojcicki, 1971, 1976; Travis, 1952; Weaver, 1949; 13 stations.

MAP UNIT 116

Geologic unit, (age), and location: Ohlson Ranch Formation of Higgins (1960), undivided (T), in Mendocino highlands.

Summary: See description for unit 108.

MAP UNIT 117

Geologic unit, (age), and location: Ohlson Ranch Formation of Higgins (1960), sandstone member (T), in Mendocino highlands.

Summary: See description for unit 108.

MAP UNIT 118

Geologic unit, (age), and location: Garrity unit of Wagner (1978) (T), near El Sobrante at north end of the East Bay Hills.

Summary: Largely sandstone, much clean, much clayey; some conglomerate and mudstone; minor tuff and tuff breccia. Much has moderate permeability, some high. Most mantle severely expansive.

Composition: About 35 percent clean sandstone; 35 percent clayey fine sandstone; 20 percent conglomerate; 10 percent mudstone and clayey very coarse grained sandstone; minor tuff and tuff breccia as described for unit 282. Clean sandstone is medium grained, well to moderately well sorted, and varies from clay free to clay coated. Clayey fine sandstone is very fine to medium grained, moderately sorted, and when scraped shows a sheen suggestive of clay or tuffaceous components. Conglomerate consists of pebbles and cobbles as much as 6 in. in diameter, mostly less than 3 in., scattered to concentrated in matrix of clean medium-grained sand to pea gravel that is mostly clay coated.

Hardness: Mostly firm to soft where weathered. Pebbles and cobbles are hard. Tuff is firm, coherent, and tough.

Bedding: Irregular. Beds range from medium to very thick (20 ft or more). Sandstone and conglomerate sequences are probably crossbedded and show much internal very thin to medium bedding. Clayey fine sandstone mostly occurs in very thick beds, but some is interbedded with clayey siltstone in medium to very thick beds. Tuff occurs in thin to very thick (15-ft or more) beds that are distinct to indistinct.

Parting: Present at many bedding planes, but not a common feature of unit.

Fracture: Mostly absent, except clayey fine sandstone has close to moderate spacing and some very close spacing of weathering fracture. Fracture spacing in tuff is moderate to very wide (as much as 6 ft), depending on bed thickness and composition.

Permeability: Intergranular permeability of clean sandstone is high where rock is clay free, moderate where clay coated; conglomerate mostly high, some moderate; clayey fine sandstone low; mudstone very low; clay- and silt-saturated very coarse grained sandstone low to very low; tuff mostly low. In all, 15-25 percent of bedrock has high intergranular permeability, 40 percent moderate, 35 percent low to very low. Most mantle very low, some moderate.

Weathering: Not observed where fresh. Weathered to depths of more than 30 ft.

Surficial mantle: Largely clayey, some granular.

Expansivity: Most bedrock is unexpansive, some expansive (mudstone). Most mantle severely expansive. Bedrock samples: R9B, mildly cracked clayey mudstone, free swell 75 percent; R10B, mildly cracked mudstone, free swell 92 percent. See sample for unit 407. Surficial mantle samples: R10A, dark sandy clay soil, typical, free swell 89 percent; R9A, dark clay soil, free swell 109 percent.

Stratigraphic thickness: About 1,100 ft (inferred from J.R. Wagner, written commun., 1973).

Sources: J.R. Wagner, written commun., 1973; Wagner, 1978; five stations.

MAP UNIT 120

Geologic unit, (age), and location: Sedimentary rocks (QT), largely equivalent to Livermore Gravels of Hall (1958), only near and south of Livermore Valley.

Summary: Mudstone and clayey sandstone interbedded with clean sandstone and conglomerate in variable proportions. Some moderate and

minor high permeability in clean sandstone and conglomerate. Clayey bedrock and most mantle are expansive.

Expression in aerial photographs: Largely hard topography, prominently ribbed; some intermediate topography. Looks more resistant than unit 645. Some flat-topped gentle dip slopes. In places, light- and dark-toned distinct bands 20-150 ft in width.

Composition: Includes the following, many of which have coatings and partial cloggings of clay: (1) Mudstone and lesser claystone and siltstone, reddish or bluish in color; (2) Clayey sandstone, including (a) well-sorted very fine grained to medium-grained sand that is saturated to nearly saturated by clay and (b) poorly sorted sand in an abundant matrix of silt and clay; (3) Clean, well-sorted sandstone that ranges from fine to very coarse grained, mostly fine to medium grained, containing minor firm concretions; (4) Conglomerate, ranging from well-sorted and washed conglomerate of tightly packed clasts in clean sandstone matrix to poorly sorted, largely clay-clogged conglomerate. Clasts are variably rounded pebbles and cobbles, mostly less than 3 in. in diameter, but in places including boulders more than 1 ft in diameter; (5) Tuffaceous sandstone, very fine to coarse grained, well sorted; (6) Tuff (see section by Sarna-Wojcicki, 1976).

Proportions vary greatly from place to place, from almost entirely conglomerate to almost entirely mudstone in intervals as thick as 100 ft or more. Near Del Valle Reservoir, 80 percent is mudstone and clay-saturated fine sandstone, 20 percent is conglomerate, tuff, and clean sandstone. On Valecitos Road, 40 percent is mudstone and clayey fine sandstone; 60 percent is conglomerate and clean sandstone, of which one-third of shallow rock may have moderate permeability. Expression in aerial photographs suggests that most of unit is clean sandstone and conglomerate.

Hardness: Mudstone and clayey sandstone are soft when wet, firm when dry. Clean sandstone and conglomerate are soft, but contain hard to firm (weathered) clasts. Tuffaceous sandstone is quite firm where weathered. Concretions in sandstone are firm where weathered. Most conglomerate is not cemented (Hall, 1958).

Bedding: Indistinct to distinct beds, medium to very thick (as much as 100 ft), in many places highly irregular or lenticular. Typical bed is thick to very thick (as much as 15 ft). Intervals of clean sandstone and tuffaceous sandstone, which generally are thick to very thick (as much as 15 ft), are internally bedded at very thin to medium.

Parting: Present on some bedding planes but not on most; mostly absent within beds. Much tuffaceous sandstone has parting at moderate to wide spacing.

Fracture: In clean sandstone, fracture is absent to irregular at moderate to wide spacing; in clayey sandstone, close to moderate spacing; in conglomerate fracture is absent; mudstone has close to very close spacing of weathering fracture; tuffaceous sandstone has moderate to wide spacing, some very wide (as much as 4 ft), some having close to very close spacing of weathering fracture. Concretions have spacing to moderate.

Permeability: Intergranular permeability of mudstone very low; clayey sandstone low; clean sandstone mostly moderate, high in places; clean conglomerate moderate; poorly sorted clayey conglomerate low; tuffaceous sandstone mostly low to very low, some moderate. Thus, much to most shallow bedrock has low and very low intergranular permeability, some moderate, minor high; probably much moderate below shallow rock. Much mantle very low, much low, some or more moderate.

Weathering: Variable. Clean sandstone weathers deeply; mudstone and clay-saturated fine sandstone have fresh color at depth of 6 ft in places. Most is weathered to depths greater than 10 ft.

Surficial mantle: Probably largely clayey, some to much granular. Two dominant soils: brown stony and clayey sand soil, such as sample LCV1, and brown clay soils, such as samples LV4 and MDS4A. Red clayey subsoil, such as sample LCV2A, underlies some granular soil.

Expansivity: Clayey bedrock (much to most of unit) is expansive, much severely expansive; clean sandstone and conglomerate (some to most of unit) are unexpansive. Some to much mantle is severely expansive, much significantly expansive, some to much unexpansive. Bedrock samples: MDS4B, typical mottled mudstone, free swell 75 percent; LCV2B, well-cracked claystone, most expansive abundant constituent, free swell 81 percent; LV3, moderately cracked red sandy claystone, free swell 99 percent; LV1, moderately cracked clay-saturated fine sandstone, free swell 88 percent; LCV4, weathered claystone in landslide, free swell 123 percent; MDS7A, mildly cracked mudstone, typical, free swell 80 percent. Surficial mantle samples: LCV1, sandy soil, typical of much of unit, free swell 52 percent (exaggerated); LV4, clay soil on claystone, free swell 77 percent; MDS4A, clay soil on mudstone, free swell 101 percent; MDS7B, silty clay soil, typical, free swell 75 percent; LCV2A, clayey subsoil, mildly cracked, free swell 99 percent.

Stratigraphic thickness: 4,000 ft (Hall, 1958).

Sources: California State Water Resources Board, 1963; California Department of Water Resources, 1966a; Geological Society of Sacramento, 1959; Hall, 1958; Hansen, 1964; Huey, 1948; Sarna-Wojcicki, 1971, 1976; 17 stations.

MAP UNIT 121

Geologic unit, (age), and location: Sedimentary rocks (QT), only on east side of Santa Clara Valley near Evergreen. Includes Packwood Gravels of Crittenden (1951) and Santa Clara(?) Formation of Crittenden (1951).

Summary: Unknown proportions of mudstone, clay-clogged conglomerate, and sandstone. Much of both bedrock and mantle is severely expansive. See descriptions of nearby similar units 122 and 151.

Expression in aerial photographs: Intermediate topography that shows much subtle ribbing that is rounded but regular.

Composition: Includes mudstone, some sandy and pebbly; and conglomerate, largely of pebbles and local boulders, in a clay-clogged medium-grained to very coarse grained sandstone matrix. Crittenden (1951) reported sandstone and, locally, rock cemented by dolomite. Proportions unknown.

Hardness: Mudstone is firm where weathered, probably firm where fresh; conglomerate is soft where fresh and weathered. Local cemented rock is hard.

Bedding: Probably medium to very thick, distinct, irregular to lenticular.

Parting: Mostly absent.

Fracture: Mudstone has close to very close spacing of weathering fracture; conglomerate unfractured.

Permeability: Mudstone has very low intergranular permeability. Conglomerate has low intergranular permeability in shallow rock, probably some to much moderate to possibly high below shallow rock. Thus, bedrock is largely low to very low where shallow, probably some to much moderate or high below shallow rock. Much surficial mantle very low, much moderate.

Weathering: Some mudstone is fresh at depth of 6 ft; most conglomerate is weathered to depths greater than 10 ft.

Surficial mantle: Much clayey, such as sample SJE8, and much granular.

Expansivity: Much of both bedrock (mudstone) and mantle is severely expansive. Samples: SJE7, weathered mudstone, typical, free swell 81 percent; SJE8, mildly cracked clay soil, free swell 99 percent.

Stratigraphic thickness: 500 ft minimum.

Sources: California State Water Resources Board, 1955; Crittenden, 1951; three stations.

MAP UNIT 122

Geologic unit, (age), and location: Sedimentary rocks (QT), only on east side of Santa Clara Valley south of Coyote.

Summary: Largely conglomerate and sandstone; some to much is clayey, some to much clean. Also, some mudstone. Most rock is soft where weathered and firm to soft where fresh. Unit is bedded in very thick

alternating layers of clean and clayey materials. Much mantle is significantly expansive, mudstone is probably expansive.

Expression in aerial photographs: Mostly intermediate topography that has some ribbing and some light- and dark-toned banding. In extreme south end of outcrop area, half is equally abundant light-toned resistant and dark-toned nonresistant bands as wide as about 30-40 ft, minor light-toned beds crop out; other half is subdued intermediate topography that lacks banding and has lower relief. Large patch at northern end of Anderson Reservoir shows concordant attitudes; largely intermediate topography, but has some resistant bands as wide as 50 ft that form hogbacks; some hard topography locally, sharp crests. One clear section on photographs shows light-toned resistant bands constituting as much as one-third of unit, the remainder being dark in tone.

Composition: Most of unit is conglomerate and clayey sandstone, some is clean sandstone and mudstone. Some sandstone matrix in conglomerate is clean and well sorted, some is clayey and poorly sorted. Conglomerate generally has clasts as large as 6 inches in diameter, locally as large as 2 ft. Near Morgan Hill, unit includes marl and vitric tuff and is interbedded with olivine basalt flows of unit 230.

Hardness: Clean sandstone and most conglomerate is soft where weathered, probably soft where fresh; most clasts in conglomerate are hard. Clayey sandstone is firm to soft where weathered, probably firm where fresh; mudstone is firm where weathered, probably firm where fresh.

Bedding: Largely distinct, medium to very thick (as much as 15-ft or more), irregular or lenticular beds of clean materials between similar thicknesses of clayey materials. Both clean and clayey materials may have internal thin to very thick bedding that is distinct to indistinct. Near Morgan Hill, unit is described as well bedded.

Parting: Mostly absent; present only on contacts between mudstone and clean materials. Many distinct bedding contacts lack parting.

Fracture: Much clean sandstone and conglomerate is unfractured; clayey sandstone may have close to moderate spacing or may show expansivity cracks; mudstone has close to very close spacing of weathering fracture.

Permeability: Much bedrock has low intergranular permeability, some moderate and some high (clean sandstone and conglomerate), some very low (mudstone). Much mantle moderate, much low, some very low.

Weathering: Some mudstone is fresh at depth of 6 ft; most sandstone and conglomerate are weathered to depths greater than 10 ft.

Surficial mantle: Much granular, much clayey.

Expansivity: Bedrock is largely unexpansive, some probably expansive (mudstone). Much mantle unexpansive, much significantly expansive, some severely expansive. Samples of clayey mantle: MGH4A, pebbly sandy clay soil, typical of 10 percent of unit, free swell 88 percent; MGH4B, sandy clay soil typical of 20 percent of unit, free swell 73 percent; MGH4C, moderately cracked soil, free swell 74 percent; MGH4D, mildly cracked soil typical of 10 percent of unit, free swell 44 percent. See units 121 and 152 for additional information.

Sources: California State Water Resources Board, 1955; five stations.

MAP UNIT 123

Geologic units, (age), and location: Glen Ellen Formation, nontuffaceous member (Q and (or) T), in northern part of region; Huichica Formation (T), in the Napa to Santa Rosa area, excluding area southwest of Napa distinguished as unit 153; older fluvial deposits (T), in northern Mayacmas Mountains.

Summary: Some each of conglomerate, sandstone, and clayey rock; minor tuff and tuffaceous rock. Some moderate to high permeability. Some mantle and bedrock are expansive.

Composition: Some conglomerate, some sandstone, and some clayey rock, interbedded with minor tuff and tuffaceous rock. Conglomerate consists of rounded pebbles, cobbles, and boulders in matrix of silty and generally clayey, poorly sorted sand. Clasts are rarely as large as 3 ft in diameter; some zones have plentiful boulders 1-2 ft in diameter; in most exposures the largest clasts are 6 in. in diameter or less, and the great majority are 3 in. in diameter or less. Clasts are mostly hard, but some are firm and even soft, and most are derived from volcanic rock. Conglomerate matrix is similar to the sandstone and consists of poorly sorted sand, ranging from very coarse to very fine grained, that contains silt and clay in varying proportions. Although some matrix is clay saturated and some clay free, sufficient clay is generally present in the weathered zone to substantially fill pores. Some conglomerate is partially cemented in irregular patches.

Sandstone similar in composition to conglomerate matrix is generally interbedded with conglomerate within conglomerate sequences. Sandstone is mostly poorly sorted, but some is well sorted, and much sandstone, as well as conglomerate matrix, contains ash and pumice fragments. Clayey rock, mostly mudstone, clayey siltstone, and silty or sandy claystone, is generally clay saturated. Tuff consists of fine and coarse ash of vitric, pumice, and crystal content, and in many places contains pumiceous or, less commonly, lithic lapilli. Most tuff has fine ash matrix that appears as tight as silt, but some tuff has matrix largely of coarse ash. Tuffaceous rock contains substantial tuffaceous components such as ash and pumice fragments, ranges in texture from silt to very coarse sand or grit, and is variably sorted and variably clay clogged. Some tuffaceous materials have no clay but a tight ash matrix, others have free clay clogging pores, and others are only partly clogged by clay or are clay free. Most tuffaceous rock has at least incipient clay development where weathered.

Hardness: Where weathered, conglomerate has hard clasts and matrix that is mostly soft and friable, but in places about half of matrix is firm owing to calcite cement. Sandstone is mostly soft and friable, but some beds are firm where tuffaceous components form much of the rock. Clayey rock varies from soft to firm. Tuff is low in density, and where fresh is mostly firm, some nearly hard, some soft, becoming soft where weathered. Much tuff is brittle, being soft to a pick but firm to the hand, and much is unusually coherent for its hardness. Tuffaceous rock is soft to firm where fresh and weathered; most fine-grained and tight rock is firm, whereas most medium- and coarse-grained rock is soft. Extremely weathered rock is soft.

Bedding: Beds of conglomerate, sandstone, and clayey rock are distinct and generally irregular, commonly lenticular or crossbedded. Beds are commonly thick to very thick (30 ft or more), but conglomerate sequences may be as thick as 100 ft or more and beds may be thin to medium within sequences of conglomerate and sandstone. Tuff occurs in distinct beds that are mostly thick to very thick (as much as 30 ft), but includes some medium beds. Tuffaceous rock shows major lithologic changes in distinct medium to very thick (30-ft) beds, commonly as thick as 15 ft, and some beds contain distinct very thin to thin interbeds. Tuffaceous rock is generally interbedded with tuff and other materials.

Parting: Present on some bedding planes, mostly between fine- and coarse-grained materials and between beds of tuff or tuffaceous rock. Absent within beds.

Fracture: In conglomerate, mostly absent, but present in places at moderate to very wide (10-ft) spacing and lined by a resistant mineral that produces firm rock along fractures. In sandstone, clayey rock, tuffaceous rock, and tuff, spacing in fresh rock is moderate to wide, some very wide (as much as 20 ft), indistinct in places; where weathered, fracture in many places becomes close to very close, commonly parallel to surfaces of exposure (scaling).

Permeability: Conglomerate and interbedded sandstone are generally clayey, producing low to very low intergranular permeability, but some have clean sand matrix resulting in moderate to high values. Intergranular permeability of clayey rock is very low, some siltstone possibly low; tuff mostly low, ranging from very low to moderate; most tuffaceous rock very low to low, but as much as 25 percent is well sorted and has moderate and, less commonly, high values. The permeable materials are generally partly clay clogged in shallow rock, probably clay free below shallow rock. Thus, bedrock has largely low to very low intergranular permeability, but some shallow rock and some to much bedrock below

shallow rock has moderate to high values. Probably much mantle moderate, much low to very low.

Weathering: In conglomerate and sandstone, weathering extends deeper than 12 ft, possibly as deep as 30 ft. Clayey rock and tuff are generally weathered to depths of only 1-5 ft. Some tuffaceous rock is impermeable and shallowly weathered, other is permeable and weathered along pores to considerable depth, although insides of pumice fragments remain fresh.

Surficial mantle: Granular to clayey, probably much of each.

Expansivity: Most bedrock is unexpansive, but some of unit (much of mudstone and claystone) is expansive, some claystone severely so, and minor clayey sandstone near tuff is expansive. Most mantle is unexpansive, but some to much, especially on mudstone and claystone, is expansive, some of this severely so. Bedrock samples: K1, claystone, free swell 91 percent; GE2A, red claystone, appears uncommonly expansive, free swell 57 percent; GE2B, white-weathering sandy claystone, free swell 58 percent; MWS6, clayey sand matrix of conglomerate, near tuff, free swell 82 percent; MWS12, tuffaceous sandstone, mildly cracked where weathered, not typical, free swell 45 percent; J4, silty mudstone, free swell 55 percent. Surficial mantle samples: K2, soil on conglomerate, free swell 33 percent; SN1, dark clayey soil, free swell 40 percent; MWS3, soil over tuffaceous facies, typical, free swell 49 percent; K3, dark clayey soil, free swell 50 percent.

Stratigraphic thickness: At least 300 ft (Weaver, 1949), possibly 3,000 ft (Cardwell, 1958).

Sources: Blake and others, 1971; Cardwell, 1958, 1965; Fox, 1983; Kunkel and Upson, 1960; McLaughlin, 1978; Weaver, 1949; 25 stations.

MAP UNIT 124

Geologic unit, (age), and location: Tehama Formation (T), including Putah Tuff Member, only north and west of Montezuma Hills.

Summary: Most is soft to firm conglomerate, sandstone, and sandy claystone; less abundant siltstone, mudstone, and water-laid tuff. In places, conglomerate is cemented hard or firm. Unit is characterized by strong permeability contrasts; moderate and high permeability materials make up 25-50 percent of unit. Much mantle is severely expansive.

Composition: Most is conglomerate, sandstone, and sandy claystone grading to clay-saturated sandstone; less abundant siltstone, mudstone, and water-laid pumiceous tuff. Conglomerate consists of well-rounded, hard pebbles and cobbles as much as 6 in. in diameter, but mostly less than 2-3 in., in matrix of poorly sorted sand that has variable clay coatings and clogging. Matrix of clay-free conglomerate is soft to loose, of clay-saturated conglomerate soft to firm. Where clay is absent or occurs only as coatings, permeability of conglomerate is high; where clay largely clogs pores, permeability is moderate, in places low. Conglomerate sequences commonly include sandstone beds and crossbeds. Some conglomerate is calcite cemented, at least in northern part of area, near Putah Creek.

Sandstone is mostly well sorted and largely medium to coarse grained, ranging from fine to very coarse grained. Some sandstone is clean and porous and has minor clay coatings, some is saturated by clay and silt. Stringers of pea gravel occur locally in sandstone. Sandy claystone and clayey fine sandstone have effectively the same properties and are abundant constituents. Siltstone and mudstone are less abundant, in places gradational to fine sandstone, and in places tuffaceous. Pumiceous tuff (Putah Tuff Member of Tehama Formation) is water-laid tuff of well-sorted, well-rounded, firm pumice clasts, mostly coarse-sand size or larger, in places as large as 1.5 in. in diameter. Pores are clay coated in places.

Proportions vary. North of Vacaville, exposures show conglomerate and sandy claystone about equally abundant, and minor clean sandstone and tuff. From Vacaville south, clean sandstone is an abundant constituent along with conglomerate and sandy claystone. Mudstone, siltstone, and tuff are minor.

Hardness: Conglomerate is soft to firm with hard clasts, but hard or firm where calcite cemented. Sandstone is soft to firm. Sandy claystone and clayey sandstone have firm pieces, but close to very close fracture produces a soft rock mass. Tuff, siltstone, and mudstone are firm.

Bedding: Major compositional changes occur in very thick beds, commonly 15-50 ft, but as thick as 100 ft. Within conglomerate sequences, sandstone and conglomerate are commonly bedded and crossbedded in thin to thick beds. Most sandstone is internally laminated and cross laminated. Tuff occurs in a few 3- to 10-ft beds that are internally thinly to very thinly bedded and crossbedded. Hard calcite-cemented zones in conglomerate are irregular and generally range from thick to 5 ft, but may be as thick as 15 ft or more. See sections by Thomasson and others (1960).

Parting: Present at bedding contacts between major compositions (15-50 ft). Absent on bedding within conglomerate intervals and within sandstone and tuff beds. Absent in sandy claystone.

Fracture: Conglomerate is unfractured except where calcite cemented, in which case spacing is 5-10 ft. Sandstone where soft is generally unfractured, where firm generally has moderate to wide spacing. Sandy claystone, siltstone, and mudstone have close to very close spacing of weathering fracture. Tuff is fractured mostly at wide to very wide (6-ft) spacing, but spacing ranges from moderate to 20 ft.

Permeability: Intergranular permeability of clean conglomerate, clean sandstone, and tuff is high, although some tuff may be moderate; clay-clogged conglomerate and sandstone moderate to low; sandy claystone, clayey sandstone, and mudstone very low to low; siltstone low. Notable contrast in permeability within unit: materials of moderate and high intergranular permeability make up 25-50 percent of bedrock, the remainder low to very low. Much mantle moderate, much very low to low.

Weathering: All exposures appear entirely weathered, one to a depth of more than 100 ft.

Surficial mantle: Granular to clayey, much of each. Claystone produces an expansive clayey soil or subsoil, sandstone a granular soil. Many soils are stony, owing to lag deposit of pebbles and cobbles.

Expansivity: Bedrock is largely unexpansive, but mudstone (minor) is expansive and sandy claystone (some to much of unit) is probably expansive. Most clayey mantle (much of unit) is severely expansive. Samples: E1, silty mudstone, free swell 79 percent; MV23, clay soil on sandy claystone, free swell 120 percent; DN2, sandy clay soil on sandstone, free swell 105 percent (exaggerated?); E4, soil on mudstone, free swell 102 percent; DN6, sandy clay subsoil on sandy claystone, free swell 87 percent.

Sources: Anderson and Russell, 1939; Olmsted and Davis, 1961; Sarna-Wojcicki, 1971, 1976; Sims and others, 1973; Thomasson and others, 1960; Weaver, 1949; 15 stations.

MAP UNIT 125

Geologic unit, (age), and location: Tehama Formation (T), only in general vicinity of Mount Diablo (equivalent to Wolfskill Formation of former usage as used by Brabb and others, 1971).

Summary: Most to almost all is clayey sandstone and sandy mudstone, but includes some clean sandstone and conglomerate of moderate to high permeability. Anomalous compositions similar to unit 352 underlie resistant topography in places near Antioch. Materials are largely firm to soft, but local tuffaceous rock and cemented rock are quite firm to hard. Much bedrock and most mantle are severely expansive.

Expression in aerial photographs: Most is soft topography that lacks ribs, dark-toned in places. Local hard topography and resistant intermediate topography represent either clean sandstone and conglomerate or materials similar to unit 352.

Composition: Unit generally consists mostly of: (1) clayey sandstone of low permeability, saturated to nearly saturated by clay, ranging from fine to coarse grained, mostly medium grained; and (2) sandy mudstone and claystone. Unit includes variable amounts of (3) clean sandstone,

medium to coarse grained, well to moderately well sorted, some having pebbly stringers; and (4) conglomerate of pebbles and some cobbles as much as 6 in. in diameter, mostly 2-3 in., in matrix of moderately sorted medium-grained to very coarse grained sand that is clean where fresh but variably clay clogged where weathered. Local minor constituents include (5) calcite-cemented sandstone and conglomerate and (6) quite firm tuffaceous and pumiceous sandstone that grades to pumiceous conglomerate (reworked lapilli tuff). Unit includes local compositions similar to unit 352: (7) blue sandstone, mostly coarse grained, well to moderately well sorted, having blue grain coatings (see unit 400); and (8) all gradations from clayey very fine sandstone to siltstone to fine sandy claystone.

In most places, clayey sandstone and sandy mudstone constitute more than 75 percent of unit, but in resistant topography more than half of unit may be clean sandstone and conglomerate. Materials similar to unit 352 are abundant locally.

Hardness: Mudstone is firm; clayey sandstone firm to possibly soft when dry, soft when wet; clean sandstone and conglomerate soft; all where both fresh and weathered. Local materials similar to unit 352 are firm and some quite tough; all have been ripped where fracture spacing is wide or less. Local tuffaceous and pumiceous sandstone is quite firm. Local calcite-cemented sandstone and conglomerate are firm to hard.

Bedding: Beds of contrasting compositions are distinct to indistinct, thick to very thick (mostly 5-25 ft), in many places lenticular and irregular; some clayey materials are unbedded or indistinctly bedded over hundreds of feet of section. Beds of clean materials have thin to thick internal bedding. Cemented beds are as thick as 4 ft.

Parting: Parting is present on some bedding planes, but absent on most bedding planes and within beds. In local compositions similar to unit 352, ripping has opened parting on some beds but not on others.

Fracture: Mudstone has very close to close, some moderate, spacing of weathering fracture; clayey sandstone has close to moderate spacing of weathering(?) fracture; in clean sandstone and conglomerate, fracture is absent to occasional. Calcite-cemented rock has moderate to wide, some as much as 4-ft, spacing. Materials similar to unit 352 have moderate and some wide spacing, but clayey interbeds have superimposed close to very close spacing of weathering fracture. Local quite firm tuffaceous rock has moderate to wide spacing.

Permeability: Intergranular permeability of sandy mudstone very low; clayey sandstone low; clean sandstone moderate to high (high where coarse grained); conglomerate high at depth, but in shallow rock clay clogging results in mostly moderate permeability, although range is low to high. Compositions similar to unit 352 have interbedded moderate to high (sandstone) and low to very low (clayey rock) intergranular permeability. Thus, intergranular permeability of most to almost all bedrock is very low to low, but some, locally abundant, is moderate to high. Most to almost all surficial mantle very low, some to moderate.

Weathering: Variable depth. One observation of all compositions weathered to depth greater than 12 ft.

Surficial mantle: Most to almost all is clayey, some granular.

Expansivity: Most to almost all bedrock is expansive, much severely expansive (mudstone and claystone). Most to almost all surficial mantle is severely expansive. Bedrock samples: HB15A, moderately cracked claystone, free swell 120 percent; AS7A, weathered clay-saturated sandstone, abundant constituent, free swell 70 percent (exaggerated); HB13, weathered sandy mudstone, abundant constituent, free swell 96 percent (exaggerated); HB10, weathered sandy mudstone, typical, free swell 135 percent; AS7B, sandy claystone, abundant constituent, free swell 121 percent; HB4A, sandy claystone, free swell 134 percent.

Surficial mantle samples: HB4B, mildly cracked sandy clay soil, typical, free swell 91 percent; PC16, mildly cracked dark sandy clay soil, typical, free swell 120 percent; HB14, mildly cracked dark sandy clay soil, typical, free swell 101 percent; HB15B, dark sandy clay soil on claystone, free swell 120 percent; AS11, well-cracked, black, popcorn clay soil on rock similar to unit 352, free swell 131 percent; BHS19, dark sandy clay soil, typical, free swell 101 percent; AS8, uncracked brown clayey sand soil on ridgetop, substantial constituent, free swell 99 percent (exaggerated).

Stratigraphic thickness: About 300-500 ft (Snow, 1957; Briggs, 1953a; Reiche, 1950); 500-1,000 ft (Brabb and others, 1971).

Sources: Brabb and others, 1971; Briggs, 1953a; Reiche, 1950; Snow, 1957; J.R. Wagner, written and oral commun., 1973; Wagner, 1978; 15 stations.

MAP UNIT 126

Geologic unit, (age), and location: Oro Loma Formation of Briggs (1953a) (T), east of Livermore Valley.

Summary: Probably largely mudstone and clayey sandstone, some clean sandstone and associated conglomerate. Minor hard beds to thick. Clean sandstone and conglomerate have moderate permeability. Much bedrock and most mantle are severely expansive.

Expression in aerial photographs: Subdued intermediate to soft topography, distinctly smoother than adjacent unit 400.

Composition: (1) Mudstone, clayey to silty and sandy; clay is montmorillonitic (Reiche, 1950). (2) Clayey, high-matrix sandstone, well sorted to poorly sorted, fine to medium grained. (3) Clean, well-sorted sandstone, fine to coarse grained, some pebbly. (4) Conglomerate of pebbles and some cobbles (as large as 6 in. in diameter, mostly less than 3 in.); in places includes boulders of Cretaceous sandstone concretions; generally has poorly sorted but clean sandstone matrix. (5) Calcite-cemented sandstone, conglomerate, and concretions as large as 18 in. in diameter. (6) Quite firm to hard tuffaceous rock.

Unit is probably largely mudstone and clayey sandstone; some clean sandstone and conglomerate; minor hard to quite firm calcite-cemented sandstone and tuffaceous rock. Reiche (1950), from good evidence, reported dominant lithology of silty and clayey, very fine to medium-grained sandstone, soft and "firm-friable," that grades erratically to sandstone or sandy and silty claystone; conglomerate and coarse sandstone minor; sporadic cemented rock.

Hardness: Clayey rock is firm when dry, soft and sticky when wet, but much high-matrix sandstone is firm wet or dry; clean sandstone and conglomerate soft; calcite-cemented rock hard; tuffaceous rock quite firm to hard; pebbles and cobbles in conglomerate hard to firm, boulders hard; these values for both weathered and fresh rock. No blasting required for aqueduct (Reiche, 1950).

Bedding: Distinct to indistinct, medium to very thick (as much as 100-ft) beds; most are highly irregular and discontinuous (Reiche, 1950). Intervals of clean compositions are mostly distinctly bedded in medium to 15-ft beds, many of which (clean sandstone) may be internally indistinctly bedded and crossbedded. Intervals of clayey rock are commonly 10-100 ft thick; beds and zones of hard rock to thick. Conglomerate is generally 3-5 ft thick, in lenticular bodies (channel fills) that are 10-20 ft in width (Reiche, 1950); to the south (probably beyond map area), conglomerate lenses are as thick as several hundred feet (Anderson and Pack, 1915).

Parting: Absent in most of unit. Present on distinct bedding planes in intervals of clean sandstone at spacing of wide to 15 ft.

Fracture: Mudstone has close to very close spacing of weathering fracture; firm, clayey, high-matrix sandstone has close to moderate spacing; clean sandstone and conglomerate have no fracture or indistinct fracture at close to moderate spacing; calcite-cemented sandstone and tuffaceous rock have largely moderate spacing, locally to very wide (5 ft).

Permeability: Intergranular permeability of mudstone very low; clayey sandstone mostly low, some very low; clean sandstone mostly moderate, minor high; conglomerate mostly moderate; calcite-cemented rock and tuffaceous rock very low to low. Thus, intergranular permeability of bedrock is largely low and very low, but some (one-eighth to one-fourth?) is moderate to locally high. Reiche (1950) reported local aquifers. Surficial mantle largely very low, some to moderate.

Weathering: No observations. Most rock weathered deeper than cuts.

Surficial mantle: Largely clayey, some granular.

Expansivity: Much bedrock severely expansive (mudstone), much probably significantly expansive (clayey sandstone, compare sample AS7A of unit 125), some unexpansive. Most mantle severely expansive. Bedrock samples: MDW21A, popcorn-weathering mudstone, free swell 118 percent, and MDW22, popcorn-weathering mudstone, free swell 120 percent, both locally substantial constituents; MDW21B, mildly cracked mudstone, typical of most mudstone in unit, free swell 100 percent; MDW5, sandy claystone, abundant constituent, free swell 145 percent. Surficial mantle samples: MDW4, clayey soil, free swell 99 percent; MDW6, clayey soil, free swell 120 percent; MDW20, dark sandy clay soil, typical, free swell 107 percent; BHY3, dark clay soil, free swell 130 percent.

Stratigraphic thickness: 450-500 ft (Reiche, 1950; Snow, 1957); 300 ft maximum in Ortigalita Peak 15' quadrangle south of map area (Briggs, 1953a).

Sources: Anderson and Pack, 1915; Briggs, 1953a; Reiche, 1950; Snow, 1957; eight stations.

MAP UNIT 127

Geologic unit, (age), and location: Purisima Formation (T), near Pajaro River at southern end of Santa Cruz Mountains.

Summary: Consists of about equal proportions of (1) soft, clean sandstone and conglomerate of moderate and some high permeability and (2) firm clayey sandstone, mudstone, and shale of low to very low permeability. Some severely expansive bedrock and surficial mantle. Depositional environment is marine toward base, continental toward top.

Expression in aerial photographs: Largely intermediate topography, but some hard topography and some areas of soft topography. Topographic contrast is accompanied by tonal banding in many places: light-toned resistant bands 5-50 ft in width, one as wide as 500 ft, among dominant, dark-toned, less resistant bands. Some beds as thick as tens of feet form ledges and walls or prominent outcrops.

Composition: (1) Clayey rock: clay-saturated to partially clay-saturated fine-grained sandstone; mudstone and some shale; fine sandy mudstone; and silty and clayey fine sandstone; all substantial constituents. Some mudstone and shale are exceedingly fine grained (Krauskopf and others, 1939) and plastic (Allen, 1946). (2) Clean rock: clean, well-sorted to locally moderately well sorted, fine- to coarse-grained sandstone and clean to clay-clogged conglomerate. Sandstone and matrix of conglomerate are largely fine and medium grained. Conglomerate consists largely of pebbles, some cobbles that are mostly less than 3 in. in diameter, and locally boulders at base. Unit also includes minor fossiliferous calcite-cemented rock, ash beds (Geological Society of Sacramento, 1959), lignite (Taliaferro, 1948), and spheroidal concretions cemented by manganese oxide (Geological Society of Sacramento, 1959). Unit consists of about equally abundant clean and clayey rock.

Hardness: Clean rock is largely soft where fresh and weathered, some firm; clayey rock firm where fresh and weathered; calcite-cemented rock hard; concretions probably hard to firm.

Bedding: Clean and clayey rocks are generally interbedded in very thick intervals (most 10-50 ft), but some interbedding at thick. Very thin to medium, distinct bedding within much clayey sandstone, but absent in most clayey rock. Medium to thick, distinct to indistinct bedding within much of clean rock, and many clean sandstone beds are indistinctly laminated. Calcite-cemented rock medium to thick; lignite and ash probably to medium. One reported "bed" of massive fine sandstone at base of unit is about 1,500 ft thick. See sections by Allen (1946).

Parting: Mostly absent. Present at contacts between clean and clayey rock, which generally have very wide (10- to 50-ft) spacing. Also present in shale at close to very close spacing, in much of clayey sandstone at close to moderate spacing, and in much of clean sandstone at moderate to wide spacing.

Fracture: Clean sandstone and conglomerate have moderate to wide spacing, some as wide as 6 ft; clayey sandstone has original moderate to wide spacing and much has additional weathering fracture at close to moderate spacing; mudstone and shale have close to very close spacing of weathering fracture; hard cemented beds have wide spacing.

Permeability: Intergranular permeability of clean rock mostly moderate, some high; clayey rock low to very low, some or more of each. On the whole, intergranular permeability of bedrock is about one-third moderate, one-third low, one-third very low, and possibly one-tenth to one-twentieth high. Mantle probably largely moderate, some low to very low.

Weathering: Clean rock weathered to depths greater than 30 ft, clayey rock to depths greater than 5 ft.

Surficial mantle: Probably largely granular, some clayey.

Expansivity: Some bedrock is severely expansive (mudstone and shale), some possibly significantly expansive (clayey sandstone), much to most unexpansive. Some mantle severely expansive, some significantly expansive, probably most unexpansive. Bedrock samples: CTT11, mildly cracked weathered shale, free swell 91 percent; CTT5, moderately cracked sandy mudstone, free swell 119 percent. Surficial mantle samples: CTT10, dark sandy clay soil, free swell 67 percent; CTT2, moderately cracked dark silty and sandy clay subsoil, free swell 101 percent.

Stratigraphic thickness: About 7,000 ft (Michelin, 1943); nearly 10,000 ft (Allen, 1946).

Sources: Allen, 1946; California State Water Resources Board, 1955; Geological Society of Sacramento, 1959; Jones, 1911; Krauskopf and others, 1939; Michelin, 1943; Taliaferro, 1948; 13 stations.

MAP UNIT 128

Geologic unit, (age), and location: Mulholland Formation of Ham (1952), upper part (T), in the East Bay Hills east of Oakland.

Summary: Interbedded sandstone, conglomerate, and variably silty mudstone; probably largely sandstone and conglomerate, but includes some or more mudstone. Rock is mostly firm, low permeability. Some bedrock and probably most mantle are expansive.

Expression in aerial photographs: Hard topography, regularly ribbed, resistant with respect to unit 130 and some of unit 129. Prominently banded by light-toned resistant zones against dark-toned nonresistant zones. Light-toned resistant bands range from less than 10 ft to 100 ft in width, mostly less than 50 ft; dark-toned bands are 10-200 ft in width, mostly less than 100 ft.

Composition: Interbedded sandstone, conglomerate, and variably silty mudstone; most of unit is probably sandstone and conglomerate, but some or more is mudstone. Sandstone varies from fine to coarse grained, well to moderately well sorted, and has silt and clay matrix filling to nearly filling pores. Conglomerate consists of hard pebbles and cobbles that are mostly less than 2 in. in diameter, but as much as 6 in. and many greater than 3 in., in poorly sorted matrix of silty and clayey sand similar to the sandstone. Mudstone varies in silt content from nearly claystone to siltstone. Unit includes hard calcite-cemented concretions to large or greater, and minor limestone, tuff, and bentonite.

Hardness: Most is firm both where weathered and fresh, some soft where weathered. Some sandstone quite firm; cobbles and pebbles in conglomerate hard; concretions and limestone hard.

Bedding: Beds are mostly distinct, some indistinct, medium to very thick (commonly as thick as 10 ft, some as thick as 30 ft or more); some intervals of a given composition are as thick as 100 ft interrupted by a few medium to thick beds of different composition. Some contacts are distinct and sharp, others gradational and indistinct. Many sandstone beds grade upward from a massive base to laminated and parted flaky sandstone. Bentonite and tuff beds to medium, persistent. See section by Radbruch and Weiler (1963).

Parting: Present on some distinct bedding planes; at close to moderate spacing on internal lamination in some sandstone (in upper part of very

thick beds); and crude to good parting in most mudstone. Radbruch and Weiler (1963) explained lack of bedding-plane landslides by the fact that many contacts are gradational and most distinct contacts are irregular.

Fracture: Conglomerate is unfractured to occasionally fractured; sandstone where parted has close to moderate spacing, where massive (unparted and unlaminated) moderate to wide, some very wide (4-ft), spacing; mudstone has close to very close spacing. Spheroidal weathering fracture in fine-grained silty sandstone and in mudstone. Much sandstone flakes where weathered.

Permeability: In shallow bedrock, sandstone and conglomerate have mostly low intergranular permeability owing to clogged pores, but some sandstone and conglomerate moderate, and mudstone very low to low; below shallow rock, probably much sandstone and conglomerate moderate, mudstone low to very low. Thus, most shallow bedrock low, some moderate, some very low; below shallow rock, probably some to much moderate, some low, some very low. Probably most mantle low to very low, some moderate.

Weathering: Variable, depending on composition. Some beds fresh at depth of 5 ft, others weathered to depth of 20 ft. Most is weathered to depths of 10-20 ft.

Surficial mantle: Probably most is clayey, some granular.

Expansivity: Probably most bedrock is unexpansive, but some or more is significantly expansive (mudstone), and minor is severely expansive (bentonite). Probably most mantle is expansive, much severely expansive. Bedrock sample: OE23, mildly cracked mudstone, free swell 75 percent. Surficial mantle samples: OE25, moderately cracked clay soil, free swell 128 percent, LTR7A, moderately cracked clay soil, most expansive material at this station, free swell 119 percent; LTR7B, clay soil, probably typical, free swell 79 percent.

Sources: Case, 1963; Ham, 1952; Lawson, 1914; Radbruch, 1969; Radbruch and Case, 1967; Radbruch and Weiler, 1963; J.R. Wagner, written commun., 1973; Wagner, 1978; six stations.

MAP UNIT 129

Geologic unit, (age), and location: Mulholland Formation of Ham (1952), lower part (T), in the East Bay Hills east of Oakland.

Summary: Largely interbedded firm sandstone and mudstone, but locally almost all sandstone beds are hard and as thick as 20 ft. In many places unit is bedded in medium to 10-ft beds, about equal parts sandstone and mudstone, but in other places swale topography suggests mudstone as thick as hundreds of feet. Some to much bedrock and most mantle are expansive.

Expression in aerial photographs: Distinctly banded in resistant, light-toned bands 10-20 ft in width between nonresistant dark-toned bands as wide as 100 ft.

Composition: Interbedded sandstone and mudstone; minor persistent beds of limestone, tuff, and bentonite. Sandstone and mudstone generally occur in about equal proportions, but in places, especially to south near Cull Canyon, swale topography suggests dominantly mudstone intervals as thick as a few hundred feet, and locally sandstone dominates. Sandstone is mostly medium grained, ranging from fine grained to very coarse grained, and has minor pebbly beds in which pebbles are mostly less than 0.5 in., but as much as 2 in., in diameter. About one-third of sandstone is well sorted, has interstices partly filled by clay and silt, and has moderate permeability; remainder consists of moderately sorted sand in silt and clay matrix, has low permeability, and flakes where weathered. Sandstone generally contains minor to some calcite-cemented concretions and beds, but to south near Cull Canyon almost all beds are cemented by calcite. Mudstone in places is fissile (shale), is variably silty and fine sandy (grades to siltstone), and locally (near Cull Canyon) is calcareous. Clay beds suitable for brickmaking are as thick as 75 ft (Lawson, 1914).

Hardness: Sandstone is mostly firm where fresh and weathered, but some is soft where weathered and minor to some is cemented by calcite and hard. Mudstone has firm pieces where fresh and weathered, except where calcareous (as near Cull Canyon), in which case pieces are hard. Limestone is hard.

Bedding: Distinct to indistinct. Includes prominently bedded sandstone and mudstone in thin to very thick (20-ft) beds (largely medium to thick but some very thick), but also includes very thick (as much as 25-ft or more, probably as much as 100-ft or more) intervals of mudstone. Most of rock (about 70 percent) is bedded at medium to 10 ft. Many sandstone beds are laminated and cross laminated. Hard cemented sandstone generally occurs in beds and concretions to thick, some concretions as large as 5 ft in diameter, but to south near Cull Canyon almost all sandstone is cemented in beds as thick as 20 ft. Persistent bentonite and tuff beds to medium.

Parting: Present at distinct bedding planes, which have moderate to very wide (10-ft) spacing, and within thin to medium mudstone beds at close to very close spacing. Present within some to much very thick mudstone. Present in some sandstone on lamination, and in some very thick sandstone at close to wide spacing in upper part of beds. In summary, distinctly bedded parts of unit have good parting, indistinctly bedded parts have less consistent parting; we estimate that good parting is present in about half of unit. Radbruch and Weiler (1963) explained lack of bedding-plane landslides by the fact that many contacts are gradational and most distinct contacts are irregular.

Fracture: Sandstone in thin to medium beds is generally fractured at close to moderate spacing, some wide, about perpendicular to beds; in thick to very thick beds, spacing is mostly wide to 6 ft, often having superimposed moderate weathering fracture. Near Cull Canyon, many hard sandstone beds are fractured at spacing greater than bed thickness. Concretions in sandstone as large as 5 ft are unfractured, but some are fractured at moderate spacing. Mudstone is fractured at close to very close spacing.

Permeability: In shallow bedrock, intergranular permeability of sandstone is largely low, some (about one-third) moderate; below shallow rock, probably much sandstone moderate. Mudstone has very low intergranular permeability, but some has low fracture permeability in shallow rock. Thus, much to most shallow bedrock low, some moderate, some to much very low; below shallow rock some to possibly much moderate, some low, much very low. Most mantle very low to low, some moderate.

Weathering: Most sandstone is weathered or partially weathered to depth of 30 ft, some to depth of more than 50 ft, some well weathered to depth of only 10 ft. Mudstone weathered to depths of 5-10 ft.

Surficial mantle: Largely clayey, some granular.

Expansivity: Some to much bedrock is expansive (mudstone), some severely expansive. Most mantle significantly expansive, some severely expansive. Bedrock samples: LTR18A, claystone, free swell 70 percent; LTR5, mildly cracked mudstone, constitutes some of unit, free swell 135 percent. Surficial mantle samples: LTR3A, uncracked to mildly cracked clayey soil, typical, free swell 65 percent; LTR18B, mildly cracked silty soil, typical, free swell 77 percent; LTR3B, sandy clay colluvium, most expansive mantle seen in unit, free swell 129 percent.

Sources: Case, 1963; Ham, 1952; Lawson, 1914; Radbruch, 1969; Radbruch and Case, 1967; Radbruch and Weiler, 1963; J.R. Wagner, written commun., 1973; Wagner, 1978; five stations.

MAP UNIT 130

Geologic unit, (age), and location: Contra Costa Group, undivided (T), in most of the East Bay Hills.

Summary: Mudstone, sandstone, and conglomerate, generally firm to soft; some to much of each composition, proportions vary in different areas. Some hard, cemented rock. Some bedrock and much to most mantle are severely expansive. See unit 131.

Expression in aerial photographs: Variable, from intermediate approaching hard topography that has distinct, contrasting tonal bands, to sub-

dued intermediate approaching soft topography that contains subdued bands in gray tones and little ribbing. Contrasting bands consist of light-toned resistant zones that are generally less than 50 ft wide, but as wide as 100 ft, between dark-toned nonresistant zones that are largely 10-100 ft wide, commonly as wide as 200 ft, and some as wide as 500 ft. The subdued gray banding probably has similar thicknesses. Field observations suggest that light-toned resistant bands are sandstone and conglomerate and dark-toned bands are mudstone. Uncommonly resistant topography in a number of places, as west of Cull Canyon Road, suggests that some sandstone and conglomerate is quite firm.

Composition: Mudstone, sandstone, and conglomerate in variable proportions, some to much of each. Mudstone, as used here, includes materials ranging from claystone to sandy claystone to siltstone. Sandstone ranges from well-sorted rock to poorly sorted silty and clayey rock and from fine to very coarse grained; some is glauconitic (Robinson, 1956). Sand grains are mostly subangular to subrounded. Conglomerate consists of variably rounded pebbles and cobbles of mostly hard rock that are generally less than 3 in. in diameter, but some as much as 1 ft in diameter, in matrix of poorly sorted silty and clayey sand. Matrix in conglomerate is commonly sufficiently silty and clayey to have low permeability, but some appears clean enough to have moderate permeability (Page,1950; Kachadoorian, 1956). Some conglomerate and probably some sandstone is calcite cemented, and calcite-cemented concretions occur in sandstone. Unit also includes hard pods and thin beds of limestone, some cherty, that constitute less than 1 percent of unit; thin seams of lignite; and minor tuff. Rare basaltic rock occurs both near Lafayette, where it is highly vesicular porphyritic basalt that is well weathered near the ground surface, and on Rocky Ridge, where it is porphyritic olivine diabase intrusive, fresh to the ground surface.

Proportions vary; some areas are largely mudstone and dirty fine sandstone, others largely sandstone and conglomerate. At sample locality BV30, 40 percent is mudstone, 40 percent conglomerate, 20 percent sandstone; at sample locality LTR16, about 50 percent mudstone (sandy claystone), 45 percent clayey sandstone, 5 percent conglomerate; at sample locality LTR17, dominant sandstone and conglomerate; near Orinda (Kachadoorian, 1956), 55 percent mudstone, 15 percent sandstone, 30 percent conglomerate. In northeast corner of Hayward 7.5' quadrangle, Robinson (1956) reported largely conglomerate and sandstone but occasional clay and limestone, although exposures are rare and ground surface is scarred by landslides (abundant landslides suggest more than occasional clayey rock). Thus, unit contains some to much of each major composition.

Hardness: Mudstone has mostly firm pieces. Sandstone and conglomerate are largely soft to firm where weathered, probably soft to firm where fresh, but some sandstone is firm and some conglomerate and sandstone is cemented by calcite and hard. Concretions are hard, as are great majority of clasts in conglomerate. Some rock is hardened, largely to firm, by iron oxide and clay cement. Limestone is hard, tuff probably firm to soft.

Bedding: Major compositional changes are distinct and mostly very thick (5-40 ft, some as much as 80 ft), but some interbedding is medium to 5 ft. Kachadoorian (1956) cited the following thicknesses: conglomerate 1-45 ft, mostly 6-8 ft; sandstone 2-15 ft, mostly 7-8 ft; mudstone mostly 30-35 ft, but as thick as 110 ft; tuff bed 6 ft. Bedding is lenticular. Conglomerate and sandstone in places are internally bedded and crossbedded, commonly indistinctly, and mudstone in places is laminated. Limestone beds and nodules are thin; lignite beds thin; calcite-cemented conglomerate to thick or more; concretions to medium. Basalt flow near Lafayette has maximum thickness of 75 ft.

Parting: Mostly absent within mudstone, sandstone, and conglomerate. Present at some bedding planes, but Radbruch and Weiler (1963) and Kachadoorian (1956) reported that many beds are gradational and that, where sharp contacts do occur, these are commonly undulatory and irregular, explaining the paucity of bedding-plane failures in unit of abundant landslides.

Fracture: In mudstone, close to very close spacing of weathering fracture on probably moderate to wide original spacing; in sandstone, moderate to wide spacing, some scaling where weathered; in conglomerate, fracture is commonly absent or at wide or very wide spacing, some at moderate spacing. Kachadoorian (1956) reported fairly regular jointing at wide spacing.

Permeability: Intergranular permeability of mudstone is very low to possibly low; sandstone and conglomerate largely low, some moderate. At sample locality BV30, an estimated 10-20 percent of unit has moderate intergranular permeability, the remainder low to very low; at sample locality LTR16, less than 5 percent of unit has moderate intergranular permeability, the remainder low to very low. In many places, probably more of unit has moderate intergranular permeability than these examples suggest. Thus, intergranular permeability of shallow bedrock is largely low and very low, some moderate; probably some to much moderate below shallow bedrock. Mantle largely very low to low, some moderate.

Weathering: Sandstone and conglomerate are weathered to depths greater than 15 ft. Some mudstone fresh at depth of 6 ft.

Surficial mantle: Largely clayey, some granular; much is stony owing to pebbles from conglomerate.

Expansivity: Much bedrock is expansive, some severely expansive (mudstone). Much to most mantle severely expansive, some unexpansive. Bedrock samples: LTR16A, gray-green waxy claystone, represents clay in much clayey sandstone and mudstone, free swell 99 percent; BV30A, popcorn-weathered mudstone, free swell 135 percent. Surficial mantle samples: WC1, clayey soil, moderately to well cracked, typical, free swell 129 percent; BV30B, moderately cracked clay soil, more expansive than most, free swell 119 percent; LTR16B, clayey sand soil, typical, free swell 90 percent; LTR17, clay subsoil, free swell 110 percent; BV34A, dark clay soil, more expansive than most, free swell 102 percent; BV34B, subsoil, severely cracked, free swell 102 percent. Kachadoorian (1956) reported that near Orinda about half of mudstone shows evidence of swelling, half shows none, and montmorillonite averages about 50 percent of clay content.

Stratigraphic thickness: As much as 6,000 ft (Lawson, 1914).

Sources: Ham, 1952; Kachadoorian, 1956; Lawson, 1914; Newton, 1948; Page, 1950; Radbruch, 1969; Radbruch and Case, 1967; Radbruch and Weiler, 1963; Robinson, 1956; Sheehan, 1956; J.R. Wagner, written commun., 1973; Wagner, 1978; five stations.

MAP UNIT 131

Geologic unit, (age), and location: Contra Costa Group, undivided (T), only in area west of San Pablo Reservoir in the East Bay Hills.

Summary: Interbedded conglomerate, sandstone, siltstone, and mudstone. Much mantle and probably some bedrock are severely expansive. See unit 130.

Expression in aerial photographs: Mostly intermediate, some soft, topography. Much of unit has weak tonal banding. Light-toned bands are resistant and 20-30 ft wide, some as wide as 50 ft, two or three as wide as 100 ft; dark-toned bands are 20-200 ft wide, mostly less than 100 ft.

Composition: Interbedded (1) conglomerate, (2) medium-grained to very coarse grained sandstone, (3) clayey fine-grained to very fine grained sandstone and siltstone, and (4) mudstone; unit contains some of each composition. Conglomerate consists of hard rounded pebbles and cobbles as much as 8 in. or more in diameter, mostly less than 3 in., in matrix of poorly sorted medium-grained to very coarse grained sand that is saturated to nearly saturated by clay and silt. J.R. Wagner (written commun., 1973) described lower half of unit as having pebbles as large as 1 in. in diameter, in contrast to cobbles as large as 4-5 in. in diameter in upper half. Sheehan (1956) reported cobbles in this unit and noted that clast size and conglomerate-to-sandstone ratio decrease rapidly to east. Medium-grained to very coarse grained sandstone is similar to conglomerate matrix and is associated and interbedded with conglomerate. This sandstone in places contains pebble trains, and consists of poorly sorted

sand that contains silt and clay to saturation or near saturation. Clayey fine-grained to very fine grained sandstone and siltstone grade into one another and into mudstone. Hard calcite-cemented concretions occur in places within medium- to coarse-grained sandstone, and some conglomerate beds are partially cemented by calcite. Unit also includes minor basaltic tuff or tuff breccia near middle of section and basalt flow near base.

Hardness: Conglomerate and medium- to coarse-grained sandstone are mostly soft to firm where weathered and fresh, but some of these materials are anomalously quite firm, especially where partially cemented by calcite. Dirty fine sandstone, siltstone, and mudstone have firm pieces where fresh and weathered and firm to soft weathered rock mass. Concretions are hard; clasts in conglomerate largely hard, some firm.

Bedding: Mostly distinct. Major compositional changes are medium to very thick (as much as 30 ft or more, generally more than 5 ft). Bedding within major compositions is thin to very thick (more than 4 ft), distinct in conglomerate sequences, indistinct in dirty sandstone sequences; some sandstone is laminated. Much of unit has irregular or lenticular bedding and crossbedding. Firm calcite-cemented conglomerate occurs in medium to thick zones; hard concretions to medium.

Parting: Largely at contacts between major compositions (moderate to very wide spacing, generally more than 5 ft). About half of mudstone has crude parting at close spacing.

Fracture: Conglomerate generally has occasional fracture, but some uncommonly firm beds have distinct fracture at moderate to 6-ft spacing. Medium- to coarse-grained sandstone in places has occasional fracture, in places vague moderate to wide spacing, in uncommonly firm rock is fractured along with adjacent conglomerate at moderate to 6-ft spacing, and in places has close to moderate spacing of weathering fracture. Dirty fine sandstone and siltstone have close to very close spacing of weathering fracture and much flaking and spheroidal weathering. Mudstone has close to very close spacing of weathering fracture.

Permeability: Intergranular permeability of conglomerate and medium- to coarse-grained sandstone is mostly low, some moderate in places, locally moderate to high; dirty fine sandstone and siltstone low; mudstone very low. Thus, shallow bedrock has largely low intergranular permeability, some very low, some moderate, locally high; below shallow rock probably much moderate, some high. Much mantle moderate, much very low to low.

Weathering: Conglomerate and medium- to coarse-grained sandstone are weathered to depths of 25-30 ft; dirty fine sandstone and siltstone have partly weathered pieces at 15 ft; mudstone fresh at 15-20 ft.

Surficial mantle: Much granular, much clayey. Two principal soils, much of each: light-colored loam soil, such as sample BV18, over conglomerate and sandstone and on ridges, and dark clayey soil, such as samples R17 and R22. Each type is dominant in places.

Expansivity: Much bedrock may be expansive, some probably severely expansive (mudstone, see unit 130). Much mantle severely expansive, much significantly expansive to unexpansive. Surficial mantle samples: BV18, loam soil, free swell 56 percent; R17, well-cracked silty clay soil, free swell 88 percent; R22, moderately cracked clayey soil, free swell 98 percent.

Stratigraphic thickness: About 3,800 ft (inferred from J.R. Wagner, written commun., 1973).

Sources: Sheehan, 1956; J.R. Wagner, written commun., 1973; Wagner, 1978; six stations.

MAP UNIT 132

Geologic unit, (age), and location: Moraga Formation, clastic member (T), in the East Bay Hills.

Summary: Most is firm sandstone, conglomerate, and mudstone; minor tuff and concretions. Similar to unit 133.

Composition: Includes (1) sandstone, fine to very coarse grained, some gritty, all having sufficient clay and silt to produce low permeability; (2) conglomerate containing hard cobbles as much as 4 in. or more in diameter in low permeability sandstone matrix; and (3) mudstone and shale. Proportions vary; some to much of each major constituent. Includes less abundant hard grit, consisting of grains of very coarse sand to pea size; hard to firm tuff and tuff breccia containing abundant crystals and clastic grains of very coarse sand to pea size; hard, elongate, medium concretions; minor limestone and lignite; well-cemented rhyolite tuff that is tight to porous; and, in places, basaltic flow rock (like unit 233) less than 20 ft thick.

Hardness: Where weathered, mostly firm pieces, some soft; probably firm where fresh. Minor hard grit, concretions, and limestone. Rhyolite tuff largely hard.

Bedding: Major compositional changes are distinct and range from medium to very thick (generally as much as 30 ft, one conglomerate interval as thick as 200 ft), mostly very thick. Internal bedding mostly indistinct and thin to thick. Much interbedding of sandstone with mudstone and conglomerate. Bedding is lenticular. Rhyolitic tuff in very thick (10- to 25-ft or more) intervals.

Parting: Present on some to most bedding planes, mostly at very wide spacing (greater than 10 ft). Much shale and mudstone have crude parting at close to very close spacing.

Fracture: Sandstone has close to moderate spacing; conglomerate unfractured; mudstone and shale close to very close spacing; hard grit close to wide spacing; tuff close to moderate spacing of weathering fracture on moderate to wide original spacing.

Permeability: Intergranular permeability of sandstone, conglomerate, grit, and tuff low; mudstone and shale very low. Thus, intergranular permeability of most bedrock is low to very low, probably minor moderate in shallow rock, some moderate below shallow rock. Probably most mantle low to very low, some moderate.

Weathering: Sandstone is weathered to depths greater than 20 ft, mudstone to 15 ft.

Surficial mantle: Probably largely clayey, some granular, like unit 133.

Expansivity: Probably like unit 133: some bedrock severely expansive (mudstone), much unexpansive; probably much to most mantle severely expansive, some unexpansive. One sample, BV32, clayey soil, free swell 80 percent.

Stratigraphic thickness: About 300 ft (J.R. Wagner, written commun., 1973).

Sources: Lawson, 1914; Lawson and Palache, 1902; Radbruch, 1969; J.R. Wagner, written commun., 1973; Wagner, 1978; two stations.

MAP UNIT 133

Geologic unit, (age), and location: Orinda Formation (T), only in the East Bay Hills.

Summary: Interbedded firm conglomerate, sandstone, and mudstone, some to much of each. Radbruch (1969) reported that some beds of cemented sandstone and conglomerate may require blasting. Some bedrock and probably much to most mantle is severely expansive.

Expression in aerial photographs: Nonresistant, subdued topography that has prominent to subdued tonal bands.

Composition: Interbedded conglomerate, sandstone, and mudstone that grades to siltstone. Conglomerate has hard rounded pebbles and cobbles, in places as large as 8 in. in diameter but mostly less than 6 in., and in other places as large as 2 in. but mostly less than 1 in., in sandstone matrix that is saturated to nearly saturated by clay and silt. Page (1950) reported that conglomerate generally consists of pebbles, rare cobbles. Sandstone is of two types: (1) relatively clean sandstone of medium to coarse grains, some gritty, in many places interbedded with conglomerate; and (2) dirty fine- to medium-grained silty sandstone that grades to siltstone and mudstone. Both types of sandstone generally have low permeability. Page (1950) reported that sandstone is ill sorted and has angular grains. Mudstone and siltstone intergrade with one another and with dirty fine sandstone. In places, conglomerate and relatively clean sand-

stone are cemented by calcite; mostly they are only partly cemented and firm, but locally they are well cemented and hard, especially sandstone. Unit locally includes minor limestone (less than 1 percent of unit), some cherty; minor lignite; minor decomposed tuff (Lawson, 1914); and intrusive diabase.

Proportions are variable: conglomerate is reported to be more abundant and coarser to the north, fine-grained rock more abundant to the south. Conglomerate constitutes from 10 to 60 percent of unit; relatively clean sandstone 20-40 percent; mudstone, siltstone, and dirty fine sandstone 40-60 percent or more. Thus, unit includes some to much of each major constituent.

Hardness: Conglomerate and sandstone where fresh are mostly firm, some soft, firm to soft where weathered. Some conglomerate and sandstone (locally as much as half) is quite firm where partly cemented by calcite, and minor is well cemented and hard. Mudstone and siltstone have firm pieces where fresh and weathered. Clasts in conglomerate, rare intrusive rock, and limestone are hard.

Bedding: Beds are irregular and lenticular. Generally, intervals of contrasting compositions (that is, conglomerate and associated sandstone against interbedded mudstone, siltstone, and dirty fine sandstone) are distinct and very thick (5-100 ft or more, most greater than 10 ft); bedding within these intervals (such as interbedding of mudstone and siltstone) is distinct to indistinct and medium to very thick (4 ft). Hard calcite-cemented zones in sandstone and conglomerate are mostly to thick. In Broadway tunnel, sandstone beds are reported to be ill defined, some crossbedded, and mostly 1-10 ft thick but as much as 65 ft; conglomerate beds mostly 1-10 ft thick, some more than 25 ft; and mudstone massive or indistinctly bedded (Page, 1950). Limestone is reported to occur in thin beds and lignite in thin seams. Tuff beds as thick as 6 ft.

Parting: Mostly at bedding contacts between contrasting compositions (very wide spacing, generally more than 10 ft). Absent in mudstone, although Radbruch and Weiler (1963) reported much laminated shale (may be in adjacent unit). Radbruch and Weiler (1963) also reported that many beds are gradational and many bedding surfaces are irregular.

Fracture: Conglomerate has very wide (4 ft) spacing to occasional fracture; sandstone has moderate to close spacing, and much weathers spheroidally on moderate spacing; weathered mudstone and siltstone have spheroidal weathering on close to very close fracture spacing, producing very small to small pieces. For fresh rock in Broadway tunnel, Page (1950) reported that mudstone and sandstone are not closely fractured and have blocky fracture.

Permeability: Intergranular permeability of conglomerate and relatively clean sandstone is mostly low, minor moderate where pores are not quite clogged; dirty sandstone and siltstone low to very low; mudstone very low. Springs along fractures and from local intrusive rock suggest local fracture permeability. Page (1950) reported that conglomerate conducted moderate amounts of water into Broadway tunnel, and so probably some or more fresh conglomerate has moderate intergranular permeability. Thus, intergranular permeability of most bedrock is low to very low, but minor moderate in shallow rock and some moderate below shallow rock. Probably most mantle low to very low, some moderate.

Weathering: Conglomerate and sandstone are weathered to depths of 20-30 ft, mudstone to 10 ft.

Surficial mantle: Probably mostly clayey, some granular.

Expansivity: Some bedrock is severely expansive (mudstone), much unexpansive. For surficial mantle, proportions are difficult; unit includes both uncracked to mildly cracked soils and moderately cracked expansive soils. Probably much to most mantle severely expansive, some unexpansive. Bedrock sample: OE26, moderately cracked mudstone, free swell 139 percent. Surficial mantle samples: OE4, moderately cracked clayey soil, free swell 103 percent; OE27B, moderately cracked sandy clay soil, free swell 94 percent; OE27A, mildly cracked clayey subsoil, free swell 85 percent. Young (1929) reported only small sections of swelling ground in Claremont water tunnel.

Stratigraphic thickness: About 2,000 ft (J.R. Wagner, written commun., 1973), 800-1,000 ft (Lawson and Palache, 1902).

Sources: Ham, 1952; Kachadoorian, 1956; Lawson, 1914; Lawson and Palache, 1902; Page, 1950; Radbruch, 1969; Radbruch and Case, 1967; Radbruch and Weiler, 1963; J.R. Wagner, written commun., 1973; Wagner, 1978; Young, 1929; five stations.

MAP UNITS 134, 284

Geologic units, (age), and location: Orinda Formation (T) and tuff member of Orinda Formation (T), only in area north of Livermore Valley.

Summary: Most of unit 134 consists of variably clayey sandstone and mudstone, some (locally equally abundant) clean sandstone, and lesser conglomerate and tuff. Zones of abundant tuff are mapped as unit 284. Much bedrock and most to almost all mantle are severely expansive in both units.

Expression in aerial photographs: Unit 134 is largely intermediate topography that has some areas of light- and dark-toned banding, other areas that lack banding, and several narrow white bands that form ridges. Light-toned bands and zones of bands are resistant and contrast with softer, smooth, dark-toned zones; soft dark-toned zones are probably clayey rock, light-toned resistant zones probably clean compositions. Narrow white bands that form ridges are tuff; principal zones of tuff constitute unit 284.

Composition: (1) Clean sandstone, well sorted, medium to coarse grained; some has very coarse grains and small pebbles. (2) Clayey sandstone, consisting of fine- to medium-grained sand that is mostly well to moderately sorted; this sandstone is variably clayey, but most is saturated to nearly saturated by clay and some has tuffaceous matrix. Some sandstone is dirty but not clayey (lacks weathering fracture). (3) Mudstone; some has minor fissility, some is sandy. (4) Tuff; includes both fine ash tuff and pumice lapilli tuff that has ash matrix. (5) Conglomerate, associated with tuff. In most places, conglomerate consists of pebbles, but some includes cobbles as large as 10 in. in diameter, mostly less than 3 in. Matrix of conglomerate is well-sorted, medium- to coarse-grained sandstone that has clay clogging. (6) Minor limestone. Some clean sandstone and conglomerate, as well as nodules and concretions in mudstone, are cemented by calcite.

Unit 134 consists largely of variably dirty and clayey sandstone and mudstone, some (locally equally abundant) clean sandstone, minor to some conglomerate, and minor tuff and tuffaceous sandstone. Composition of soft dark-toned zones on aerial photographs is estimated to be about 45 percent mudstone, 45 percent clayey sandstone, and 10 percent cleaner sandstone; composition of light-toned resistant zones is about 30 percent clayey sandstone, 30 percent clean sandstone, 30 percent mudstone, or possibly dominant clean compositions. Much to most of unit 284 consists of tuff, as described above and for unit 120; the remainder consists of unknown proportions of other materials described above.

Hardness: Dirty and clayey sandstone is firm; clean sandstone soft to firm; mudstone firm to soft; conglomerate soft to firm with hard clasts; tuff beds firm to hard, many brittle; tuffaceous sandstone quite firm; calcite-cemented sandstone, conglomerate, concretions, and nodules hard. All hardnesses are for weathered dry rock, probably same for fresh rock.

Bedding: Medium to very thick (50-ft or more) beds, many thick to 10 ft, variably regular to lenticular and irregular. Mudstone intervals are as thick as 50 ft or more; conglomerate in places makes up 80 percent of 150-ft sections. Distinctness of beds depends upon compositional contrast; some contacts are distinct and provide potential parting, some are indistinct and lack potential parting. Mudstone, in places at least, has indistinct thin to medium bedding within very thick intervals. Beds and zones of calcite-cemented conglomerate and sandstone are thick to 4 ft; nodules and concretions to large; limestone beds medium. Tuff beds in unit 284 occur in zones of dominant tuff as thick as 50 ft or more, many 10-50 ft thick (as judged from expression in aerial photographs); tuff beds show many distinct internal very thin to thick beds that lack parting

potential. Most tuff beds in unit 134 are thick to 5 ft (Sarna-Wojcicki, 1976).

Parting: Present on some bedding planes, mostly wide to 10-ft spacing. Poorly developed parting in some mudstone. In tuff, little parting on bedding within tuff, but present at unknown spacing, probably wide to very wide (as much as 15 ft), on contacts between tuff and nontuffaceous rock within zones of dominant tuff.

Fracture: Mudstone and clayey sandstone have close to very close spacing of weathering fracture; clean and silty sandstone have close to wide, mostly moderate, fracture spacing. Tuff has moderate to 4-ft spacing, and some has additional weathering fracture at close to very close spacing. Conglomerate is unfractured. Tuffaceous sandstone has moderate to wide original spacing and close to very close spacing of weathering fracture. Calcite-cemented sandstone, conglomerate, concretions, and nodules generally have moderate to wide spacing, some as much as 5 ft.

Permeability: Intergranular permeability of mudstone is very low; clayey and dirty sandstone low; clean sandstone moderate; conglomerate low to moderate, probably largely low; tuff low to very low; tuffaceous sandstone low. Thus, intergranular permeability of bedrock in both units is largely low to very low, minor to some moderate in shallow rock, probably some moderate to high below shallow rock. Almost all mantle in unit 134 is very low, minor to some moderate; most to almost all mantle in unit 284 is very low, minor to some moderate.

Weathering: Mudstone is weathered to depths less than 8 ft, clean sandstone probably to depths greater than 30 ft.

Surficial mantle: In unit 134, almost all is clayey, minor to some granular; in unit 284, most to almost all is clayey, minor to some granular.

Expansivity: In unit 134, much bedrock is severely expansive (mudstone), probably most is expansive; almost all mantle is severely expansive. In unit 284, probably much bedrock is expansive; probably most to almost all mantle is severely expansive. Bedrock samples: D19A, moderately cracked mudstone, typical of much mudstone, free swell 105 percent; LV6, well-cracked fine sandy mudstone, anomalous but abundant local constituent in intervals thicker than 50 ft, free swell 140 percent. Surficial mantle: 80 percent of mantle in unit 134 is similar to sample DU2, dark sandy clay soil, free swell 113 percent, and sample D20, dark clay soil, free swell 103 percent; 10 percent is similar to sample TJ8, well-cracked dark clay soil, free swell 112 percent, and sample D21, moderately cracked dark clay soil, free swell 129 percent; and 10 percent of mantle is sandy, light colored, very mildly cracked. Other samples: TJ1, light-brown clayey soil on conglomerate, free swell 80 percent; D2, dark clay soil, typical, free swell 108 percent.

Stratigraphic thickness: Unit 134 about 9,000 ft (Hall, 1958).

Sources: Hall, 1958; Sarna-Wojcicki, 1971, 1976; Taff, 1935; Vitt, 1936; Webb and Woodburne, 1964; Welch, 1964; 12 stations.

MAP UNIT 140

Geologic unit, (age), and location: Glen Ellen Formation, tuffaceous member (Q and (or) T), in area east of Santa Rosa Valley.

Summary: Much (probably more than 40 percent) tuff and tuffaceous rock interbedded with some conglomerate, some sandstone, and some fine-grained clayey rock. See unit 123.

Composition, hardness, bedding, parting, fracture, and weathering: Materials in this unit are identical to those described for unit 123, but proportion of tuff and tuffaceous rock is different.

Permeability: Most shallow bedrock has low to very low intergranular permeability, some moderate to high; below shallow rock, some to much moderate to high. Probably much mantle moderate, much low to very low.

Surficial mantle: Granular to clayey, probably much of each.

Expansivity: Most bedrock is unexpansive, but some (much of mudstone and claystone and much clayey sandstone near tuff) is expansive, some claystone severely so. Much to most mantle is expansive, some of this severely expansive. See samples for unit 123.

Sources: Blake and others, 1971; J.A. Bartow and M.C. Blake, Jr., oral commun., 1973; Cardwell, 1958, 1965; Gealey, 1951; Sarna-Wojcicki, 1971; several stations.

MAP UNIT 141

Geologic unit, (age), and location: Sedimentary deposits (T), near Napa and Sonoma Valleys.

Summary: Largely soft sedimentary materials, almost all having some tuffaceous component; includes conglomerate, sandstone, and silty claystone. Most has low to very low permeability, but unit contains some materials of moderate to high permeability. Some severely expansive bedrock and mantle. See units 123 and 140 for more detailed description of similar materials.

Expression in aerial photographs: Least resistant unit in Sonoma Volcanics, generally underlies low topography.

Composition: Sedimentary materials, almost all of which have some tuffaceous component; includes materials of different character in different areas of exposure. Major compositions are: (1) Conglomerate of hard rounded pebbles and cobbles, mostly less than 3 in. in diameter but as large as 1 ft, in matrix of clean to clay-saturated, fine-grained to very coarse grained sandstone. (2) Tuffaceous sandstone and tuff, variably tight or porous. (3) Silty claystone. Unit consists of some to much of each major composition; locally includes andesitic or rhyolitic flow rock (like units 234 and 218).

Hardness: Largely soft; some tuff and tuffaceous sandstone is firm. Clasts in conglomerate are hard.

Bedding: Intervals of major compositions are distinct to indistinct and mostly very thick (10-30 ft); bedding within these intervals, including crossbedding, is medium to very thick (5 ft). In places, sandstone, conglomerate, and claystone are distinctly interbedded in medium to 15-ft, generally thick, beds.

Parting: At some bedding planes, mostly at very wide (10- to 30-ft) spacing.

Fracture: Highly variable spacing, ranging from close and moderate in claystone and some sandstone, to moderate and wide in some tuff and tuffaceous sandstone, to very wide, occasional, or absent in coarse sandstone and conglomerate. In places, fracture is developed only within 1-2 ft of ground surface.

Permeability: Intergranular permeability of most bedrock is low to very low, but perhaps one-fourth of shallow bedrock is moderate to locally high; generally more moderate and high below shallow bedrock. Most mantle low to very low, some moderate.

Weathering: Permeable materials are weathered to depths of more than 25 ft, relatively impermeable materials to depths of 4-10 ft; weathered beds may underlie unweathered beds. Free clay is produced in many beds by weathering, but absent in tight beds.

Surficial mantle: Largely clayey, some granular.

Expansivity: Most bedrock is unexpansive; some is severely expansive (claystone), particularly in area of exposure near Howell Mountain Road. Much to most mantle is unexpansive, but some or more is severely expansive, particularly in area of exposure near Howell Mountain Road. Bedrock sample: SH5, claystone typical of much of area of exposure near Howell Mountain Road, free swell 104 percent. Surficial mantle samples: N7, typical clayey soil, free swell 35 percent; SH16A, clay in landslide, free swell 99 percent; SH16B, cracked clay, free swell 54 percent.

Sources: K.F. Fox, oral commun., 1972-73; Fox and others, 1973; Johnston, 1948; Kunkel and Upson, 1960; six stations.

MAP UNIT 150

Geologic unit, (age), and location: Montezuma Formation (Q), only south of San Pablo Bay at north end of the East Bay Hills.

Summary: Clayey materials interbedded with some sandstone and conglomerate. Largely soft, but some firm materials. Much severely expansive bedrock and mantle.

Composition: Most consists of clayey material, including mudstone, claystone, siltstone, and clayey fine-grained sandstone; some to much is nonclayey material, including silty fine-grained sandstone, clean medium- to fine-grained sandstone, and conglomerate. Conglomerate consists of hard and firm clasts rarely as much as 6 in. in diameter in matrix of variably silty, medium-grained sandstone. A typical exposure might show largely clayey material, but perhaps 30 percent clean sandstone and 10 percent conglomerate. Includes oyster bed at base of unit in places.

Hardness: Largely soft; some clean sandstone approaches loose; some clayey fine sandstone, mudstone, and claystone are firm.

Bedding: Horizontal beds of variable thickness. Major lithologic changes are distinct and medium to very thick (30 ft). Within these intervals, bedding is indistinct at medium to very thick (6 ft), except clean sandstone has internal thin to very thin crossbedding.

Parting: At some bedding planes, which mostly have wide to very wide (30-ft) spacing, but absent on other bedding planes and within beds.

Fracture: Largely unfractured. Firmer materials are fractured; mudstone at close spacing, clayey sandstone in places at moderate to wide spacing.

Permeability: Intergranular permeability of claystone, mudstone, and clay-saturated sandstone very low; siltstone and partly saturated clayey fine sandstone low; clean sandstone mostly moderate, some high; conglomerate mostly moderate, some low. Thus, intergranular permeability of most bedrock is low to very low, some to much moderate to high in horizontal interbeds. Most mantle very low to low, some moderate.

Weathering: All exposures are weathered at least on surface of cuts to depths greater than 10 ft.

Surficial mantle: Largely clayey, some granular.

Expansivity: Some to much bedrock is severely expansive (claystone, mudstone), some unexpansive. Much mantle severely expansive, some unexpansive. Bedrock samples: MI10, silty claystone, moderately cracked, free swell 122 percent; MI7B, sandy claystone, free swell 170 percent; MI13, silty claystone, well cracked, free swell 154 percent. Surficial mantle sample: MI7A, sandy clay soil, well cracked, free swell 97 percent. Expansive claystone and mudstone constitute much of unit in places, in other places as little as 10 percent of exposure.

Sources: J.R. Wagner, written commun., 1973; Wagner, 1978; four stations.

MAP UNIT 151

Geologic unit, (age), and location: Sedimentary rocks (QT), only along Santa Clara Valley margin in the San Jose-Fremont area.

Summary: Largely clayey rock, including mudstone, siltstone, and clayey sandstone; some conglomerate. Most bedrock and mantle is expansive.

Expression in aerial photographs: Nonresistant intermediate topography.

Composition: Largely clayey rock, including mudstone, siltstone, and clayey sandstone; some conglomerate; minor calcite-cemented rock, especially near base. Some clayey sandstone is pebbly. See units 120-122 for more detailed description of similar materials.

Hardness: Clayey rock is largely firm to soft where weathered, firm where fresh; conglomerate largely soft with hard clasts; cemented rock hard.

Bedding: Largely distinct, medium to very thick (3- to 15-ft or more), irregular or lenticular beds of conglomerate between similar thicknesses of clayey rock. Conglomerate and clayey rock may be internally bedded, distinctly to indistinctly, at thin to very thick. Hard cemented rock in medium to very thick (5-ft) beds.

Parting: Largely absent; present only at contacts between mudstone and conglomerate.

Fracture: Clayey rock has close to moderate spacing of weathering fracture; much conglomerate is unfractured; cemented rock probably moderate to wide.

Permeability: Most bedrock has low to very low intergranular permeability, some moderate to high (conglomerate). Mantle largely very low.

Weathering: Some mudstone is fresh at depth of 6 ft; most sandstone and conglomerate is weathered to depths greater than 10 ft.

Surficial mantle: Largely clayey.

Expansivity: Much to most bedrock is severely expansive (mudstone), some significantly expansive (clayey sandstone). Most mantle expansive, much severely so. Bedrock samples: CVR1, weathered sandy mudstone, typical of about half of bedrock, free swell 108 percent; CVR37, weathered clayey sandstone, free swell 57 percent. Surficial mantle samples: CVR38, mildly cracked sandy clay soil, typical, free swell 75 percent; CVR39, black pebbly clay soil, typical, free swell 100 percent. California Department of Water Resources (1966b) reported fat clay soil (that is, highly plastic and probably severely expansive clay soil) that has cracks to depth of 30 ft.

Stratigraphic thickness: At least 800 ft.

Sources: California Department of Water Resources, 1966b, 1967; Crittenden, 1951; Templeton, 1912; five stations.

MAP UNIT 152

Geologic unit, (age), and location: Sedimentary rocks (QT), only in hills east of the San Jose-Fremont area.

Summary: Most is mudstone, siltstone, and clayey very fine grained sandstone; some sandstone and conglomerate; minor calcite-cemented rock, tuff, and tuffaceous sandstone. Near Monument Peak, largely clean conglomerate and sandstone. Most bedrock is significantly expansive, most mantle severely expansive.

Expression in aerial photographs: Largely intermediate topography, most lacks ribs. Near golf course has numerous, prominent, light-toned resistant bands as wide as 30 ft against dark-toned bands as wide as 100 ft. On steep slope below Monument Peak, hard to intermediate topography shows abundant resistant light-toned bands as wide as 30 ft interspersed with dark-toned bands of about equal or greater width (generally as much as 50 ft). Light-toned bands are probably conglomerate and sandstone(?) as described in literature.

Composition: Over most of area, most of unit (80 percent) is mudstone, siltstone, and clayey very fine grained sandstone; some (20 percent) is dirty sandstone and conglomerate; minor hard calcite-cemented sandstone and conglomerate. Near Monument Peak, most of unit is conglomerate and sandstone, probably more than half conglomerate; in this area, conglomerate has clean, coarse sand matrix and sandstone is coarse to medium grained.

Hardness: Clayey materials are firm where weathered, probably firm where fresh. Sandstone and conglomerate are firm to quite firm where weathered, probably hard to firm where fresh. Calcite-cemented rock is hard.

Bedding: Largely distinct, medium to very thick (3- to 15-ft or more), irregular or lenticular beds of sandstone and conglomerate between similar thicknesses of clayey rock; these materials may be internally bedded, distinctly to indistinctly, at thin to very thick. Hard cemented rock in medium to very thick (5-ft) beds.

Parting: Largely absent; present only on contacts between mudstone and sandstone or conglomerate.

Fracture: Most clayey rock has very close to moderate spacing of weathering fracture. Conglomerate and sandstone (including hard cemented rock) have spacing at close to very wide (5 ft), mostly moderate to wide, and in places produce coherent blocks as large as 8 ft in diameter.

Permeability: Intergranular permeability of clayey rock (most of unit) is very low to low; sandstone and conglomerate (some of unit) are largely low, except near Monument Peak where they constitute most of unit and are probably moderate to high; calcite-cemented rock very low to low. Probably some low fracture permeability in shallow bedrock. Most mantle very low, except most is probably moderate near Monument Peak.

Weathering: Some mudstone is fresh at depth of 6 ft; most sandstone and conglomerate is weathered to depths greater than 10 ft.

Surficial mantle: Largely clayey, except most is probably granular near Monument Peak.

Expansivity: Near Monument Peak, most bedrock and mantle are probably unexpansive. Elsewhere, most bedrock is significantly expansive, most mantle severely expansive. Bedrock samples: CVR19A, typical mudstone, free swell 50 percent; CVR19B, cracked mudstone, free swell 70 percent. Surficial mantle samples: CVR5, mildly cracked sandy clay soil, typical, free swell 100 percent (exaggerated); CVR19C, moderately cracked sandy clay soil on some of unit, free swell 85 percent.

Stratigraphic thickness: As much as 2,000 ft.

Sources: California State Water Resources Board, 1955; Crittenden, 1951; Hall, 1958; Templeton, 1912; three stations.

MAP UNIT 153

Geologic units, (age), and location: Glen Ellen Formation (Q and (or) T) and Huichica Formation (T); clayey facies mapped by reference to Weaver (1949) and interpretation of aerial photographs, southwest of Napa.

Summary: Almost all is unbedded claystone and siltstone; minor interbedded conglomerate and sandstone similar to that described for unit 123. Most bedrock and mantle is expansive. See unit 123.

Expression in aerial photographs: Entirely nonresistant, soft topography; distinguished from unit 123 by excluding areas of resistant topography.

Composition: Almost all is silty claystone, claystone, and siltstone; minor interbedded conglomerate and sandstone similar to that in unit 123. Largely clay saturated.

Hardness: Soft to possibly firm where fresh, soft where weathered.

Bedding: Largely absent; interbedded conglomerate and sandstone are distinct.

Parting: Absent.

Fracture: Unknown where fresh, close to very close where weathered.

Permeability: Intergranular permeability of almost all bedrock is very low or low, but minor low (in shallow rock) to moderate (below shallow rock) in sandstone and conglomerate interbeds. Most mantle very low, some low.

Weathering: To depths of more than 6 ft.

Surficial mantle: Almost all clayey. Dark clay and silty clay soil, 2-3 ft thick.

Expansivity: Most to almost all bedrock is expansive, some or more is severely so. Most to almost all mantle is expansive, most is severely expansive. See unit 123 for bedrock samples. Surficial mantle samples: CW2, dark soil, typical, free swell 89 percent; N8, clay and soil over clay, typical, free swell 91 percent. Compare sample SN1, dark clayey soil on clayey materials in unit 123 that appear similar to unit 153, free swell 40 percent.

Sources: Fox, 1983: Kunkel and Upson, 1960; Weaver, 1949; four stations.

MAP UNIT 154

Geologic unit, (age), and location: Siesta Formation (T), in the East Bay Hills.

Summary: Interbedded mudstone and sandstone, largely mudstone. Most firm, low to very low permeability. Much expansive bedrock, much severely expansive mantle.

Expression in aerial photographs: Soft, nonresistant topography and some areas of intermediate topography.

Composition: Interbedded mudstone (silty claystone) and sandstone; approximately 60-70 percent mudstone, 30-40 percent sandstone. Sandstone is tuffaceous, very fine to coarse grained, mostly fine to medium grained, and moderately to moderately well sorted. Most sandstone is saturated by clay and silt, but about 5-10 percent is clean enough to have moderate permeability. Unit includes minor pebble conglomerate, cherty limestone, lignite seams, and tuff; also a few basaltic or andesitic flows near top of unit. Includes hard, calcite-cemented, ovoid concretions to medium and some partial calcite cementation that produces firm to quite firm rock.

Hardness: Mudstone has firm pieces. Sandstone is largely firm, some firm to soft, some partially cemented by calcite and quite firm. Conglomerate firm, tuff probably firm. Hard concretions to medium.

Bedding: Distinct to indistinct interbedded sandstone and mudstone mostly in medium to very thick (10-ft) beds, but some mudstone beds as thick as 20 ft. Radbruch (1969) reported that beds are thin to 12 ft thick, mostly 1-5 ft. Much mudstone is massive, some laminated. Limestone beds rarely as thick as 10-20 ft. Lignite in distinct very thin beds.

Parting: At bedding planes, mostly moderate to very wide (10-ft) spacing.

Fracture: Mudstone has close to very close spacing. Dirty sandstone is generally fractured at close to moderate spacing, and some weathers spheroidally at very close spacing to produce onionskin shells. Clean sandstone has moderate to wide spacing, rarely very wide (as much as 5 ft).

Permeability: Intergranular permeability of mudstone is very low; most sandstone (saturated by clay and silt) low; clean 5-10 percent of sandstone moderate, some possibly high; conglomerate low; tuff probably low; limestone very low. Thus, intergranular permeability of most bedrock very low, some to much low, minor moderate to high in shallow rock, probably some moderate to high below shallow rock. Probably some low fracture permeability in shallow rock. Most mantle very low to low, probably some moderate.

Weathering: Much of unit lacks color change, gray to ground surface. Weathering fracture extends to depths of more than 15 ft. Radbruch (1969) reported weathering depths from a few inches to 15 ft. We estimate weathering to depths greater than 30 ft in permeable sandstone.

Surficial mantle: Largely clayey, probably some granular. Radbruch (1969) reported soil as deep as 3 ft.

Expansivity: Much to most bedrock is expansive, some severely expansive. Much mantle is severely expansive, probably much significantly expansive. Bedrock samples: OE5B, well-cracked weathered mudstone, free swell 76 percent; OE6, well-cracked weathered mudstone, free swell 87 percent; much mudstone appears less expansive. Surficial mantle sample OE5A, dark clay soil, typical of 30-40 percent of mantle, free swell 122 percent; remainder of soils are less expansive.

Stratigraphic thickness: As much as 200 ft (Lawson, 1914); 550 ft (J.R. Wagner, written commun., 1973).

Sources: Case, 1963; Lawson, 1914; Lawson and Palache, 1902; Radbruch, 1969; Radbruch and Case, 1967; J.R. Wagner, written commun., 1973; Wagner, 1978; four stations.

MAP UNIT 155

Geologic unit, (age), and location: Petaluma Formation (T), in the Santa Rosa-Sonoma Valley area.

Summary: About 70 percent claystone and fine-grained clayey rock, 25 percent sandstone, 5 percent conglomerate. Most bedrock and mantle is severely expansive.

Expression in aerial photographs: Topography is subdued over clayey rock, especially claystone, and more resistant over clean materials. Exposures are representative largely of clean materials.

Composition: Largely claystone and similar fine-grained clayey rock, such as clayey siltstone and sandy claystone; lesser sandstone and conglomerate. Includes minor tuff breccia, fine-grained tuff, tuffaceous rock, and diatomite. Limestone beds and nodular masses occur rarely in claystone, and calcite-cemented concretions and beds occur locally in sandstone.

Claystone, silty claystone, clayey siltstone, and sandy claystone all occur, and are similar in properties. Sandstone ranges from very fine grained to very coarse grained, mostly fine to medium grained; from poorly sorted to well sorted, mostly moderately sorted to well sorted; and from clean rock that lacks interstitial fines to rock that is saturated

by silt and (or) clay. Some of both clean and clay-saturated sandstone are present, and much sandstone is partly clogged by clay and silt. Conglomerate is composed of hard clasts in sandstone matrix. Clasts generally are less than 3 in. in diameter, but in places as large as 6 in. and locally (near Meacham Hill) greater than 1 ft in diameter. Conglomerate matrix is similar to sandstone beds, but generally more poorly sorted; it varies in grain size and in proportion of clay and silt from clean sand to clay-saturated sand. Almost all conglomerate contains interstitial matrix, but some very coarse sandstone and grit (grains as large as 0.15 in.) lacks interstitial fines. Tuffaceous rock includes pumiceous tuff breccia, pumiceous lapilli tuff, and well-bedded tuffaceous rock. In places, tuff beds are bentonized, but mostly they appear fresh. Diatomite occurs near tuff in places.

An estimated 70 percent of unit is claystone and fine-grained clayey rock, 25 percent sandstone, and 5 percent conglomerate (Cardwell, 1958; Weaver, 1949).

Hardness: Fine-grained clayey rock is firm where fresh, firm to soft and sticky where weathered. Sandstone and conglomerate are soft and friable where weathered, but clasts in conglomerate are hard. Where fresh, tuff breccia and lapilli tuff are firm and tough, diatomite firm to hard but punky, and tuffaceous rock mostly firm. Tuff beds are low in density. Calcite-cemented sandstone beds and concretions are hard, as is limestone.

Bedding: At a broad scale, zones and lenses of sandstone and conglomerate as thick as 200 ft are distributed within dominant fine-grained clayey rock. At a more detailed scale, bedding, where observed, is distinct, and thicknesses are as follows: Claystone and most fine-grained clayey rock are internally laminated and occur in very thin to very thick beds between beds of different composition. Sandstone beds range from thin to very thick (30 ft), but are mostly medium to 10 ft. Sandstone in many places is internally laminated and cross laminated, and beds are irregular in thickness and form, especially where interbedded with conglomerate. Conglomerate occurs in medium to very thick beds, in many places crossbedded with sandstone interbeds. Tuff breccia and lapilli tuff occur in very thick (10- to 25-ft) beds. Tuffaceous rock generally occurs in medium to thick beds, but beds range from thin to 15 ft. Diatomite occurs in beds as thick as 30 ft. Calcite-cemented concretions are medium in thickness and as much as 5 ft in length. Limestone beds and nodules are thin to medium.

Parting: Mostly absent in fine-grained clayey rock, but present in some claystone at close to moderate spacing. Mostly present at bedding planes between sandstone and fine-grained clayey rock, but not between sandstone and conglomerate. Close spacing of parting in some diatomite becomes very close where weathered. Good parting in bedded tuffaceous rock.

Fracture: In claystone, weathering fracture is discoidal at close to very close spacing; some or more has original fracture at moderate spacing. Siltstone and clayey very fine sandstone show moderate spacing where fresh, becoming close to very close where weathered. Some or more sandstone shows spacing at close to wide, mostly moderate, some or more shows no fracture; thin-bedded sandstone is mostly fractured at close to very close spacing. Clayey sandstone develops additional fractures at moderate to very close spacing where weathered. In conglomerate, fractures generally are not recognizable except where cemented by iron oxide. Tuff breccia and lapilli tuff are fractured at moderate to wide spacing, some close, becoming very close to close where weathered. Diatomite has close to moderate spacing. Tuffaceous rock has mostly moderate spacing, becoming close to very close where weathered.

Permeability: Intergranular permeability is very low in claystone and clay-saturated rock; low in silt-saturated sandstone; moderate to high in clean sandstone and clean grit; low to very low in tuff and tuffaceous rock. Thus, intergranular permeability of most bedrock is very low, but some is moderate and even high. Unit is reported to have low yields as an aquifer, generally adequate for domestic use only. Most mantle very low, some moderate.

Weathering: Variable; to depths of 2-3 ft in claystone, more than 30 ft in some sandstone. Sandstone and conglomerate generally are weathered to depths greater than 15 ft.

Surficial mantle: Largely clayey, some granular.

Expansivity: Most bedrock and mantle are severely expansive, some of each unexpansive. Bedrock samples: PR14, weathered claystone, typical under much of low topography in unit, free swell 121 percent; PR8, sandstone, free swell 42 percent; PR6B, weathered sandstone, free swell 15 percent; PR9, claystone near base of unit, free swell 80 percent; SP2A, claystone, free swell 84 percent; GE8, weathered very fine sandy claystone, free swell 129 percent; CO2, weathered claystone, free swell 148 percent; TR5, claystone, free swell 83 percent. Surficial mantle samples: SP1, deeply cracked soil, free swell 124 percent; SP2B, clay soil on claystone, free swell 122 percent; CO5, clay soil, typical, free swell 127 percent; CO9, soil on sandy claystone, free swell 54 percent; PR7, soil, free swell 47 percent; PR12, clay soil on sandstone and claystone, free swell 120 percent; PR6A, typical soil on sandstone and conglomerate, free swell 39 percent. In summary, generally high expansivity of claystone, soil on claystone, and soil on interbedded claystone and sandstone; low expansivity of sandstone and soil on predominantly sandstone and conglomerate.

Stratigraphic thickness: About 4,000 ft for entire formation (Morse and Bailey, 1935). Where claystone member (unit 156) is distinguished, remainder of unit about 3,500 ft (Morse and Bailey, 1935).

Sources: J.A. Bartow, written commun., 1972; Blake and others, 1974; Cardwell, 1958; Dickerson, 1922; Huffman, 1971; Johnson, 1934; Kunkel and Upson, 1960; Morse and Bailey, 1935; Travis, 1952; Weaver, 1949; 25 stations.

MAP UNIT 156

Geologic unit, (age), and location: Petaluma Formation, claystone member (T), in the Santa Rosa-Sonoma Valley area.

Summary: Largely claystone and shale; some interbedded siltstone; minor volcanic rock and sandstone. Materials are largely firm where fresh, firm to soft where weathered. Most to almost all bedrock and mantle is severely expansive.

Composition: Largely claystone and shale; some siltstone; minor scattered sandstone interbeds, nodular masses and interbeds of limestone, lignite beds, and volcanic rock. Lower part of unit is interbedded with volcanic rock; upper part has increasing amount of sandstone as thin to medium, some thick, beds interbedded with thick, some medium, claystone.

Hardness: Shale and claystone are firm where fresh, firm to soft where weathered; sandstone interbeds soft and friable where weathered, probably firm where fresh; limestone hard.

Bedding: Shale and claystone are generally laminated; sandstone interbeds very thin to medium, rarely thick; limestone interbeds and nodular masses thin to very thick (4 ft), mostly thin; lignite beds thin to medium.

Parting: In shale at very close spacing, and at contacts with sandstone and limestone interbeds. An unknown proportion of fresh rock is fissile.

Fracture: In shale and claystone, spacing is very close to close where observed (probably weathered); in sandstone, mostly close to moderate; in limestone, variable, from close spacing to absent.

Permeability: Intergranular permeability is very low in shale and claystone, low in siltstone, low to possibly moderate in sandstone. Thus, intergranular permeability of most bedrock very low, some low, minor low to possibly moderate in shallow rock, minor moderate below shallow rock. Almost all mantle very low.

Weathering: Color change at depths of 2-3 ft. Weathering develops fissility in otherwise nonfissile rock.

Surficial mantle: Almost all clayey.

Expansivity: Most to almost all bedrock and mantle is severely expansive. Sample: PR10, typical clayey soil, free swell 98 percent. Expansivity is probably similar to claystone and soil over claystone in unit 155.

Stratigraphic thickness: 500-600 ft (Morse and Bailey, 1935).

Sources: J.A. Bartow, written commun., 1972; Blake and others, 1974; Huffman, 1971; Morse and Bailey, 1935; one station.

MAP UNIT 200

Geologic unit, (age), and location: Andesite and basalt (T), near Evergreen, southeast of San Jose.

Summary: Not seen in field. Includes fresh andesite and basalt, and altered andesite. Mantle is probably expansive.

Composition: (1) Fresh, black, porphyritic andesite that has a pitchy luster. Contains phenocrysts of plagioclase and augite in felted groundmass that has interstitial glass (Crittenden, 1951). Composition probably includes basalt. Occurs immediately east of Silver Creek. (2) Altered andesite, cream colored to greenish, vaguely porphyritic having pilotaxitic groundmass. Occurs within unit 689 near Thompson Creek (not distinguished on map).

Hardness: Probably hard where fresh, hard to firm where weathered.

Bedding: Sill-like and dikelike sheets, unbedded.

Parting: Probably absent.

Permeability: Bedrock has very low intergranular permeability, probably low fracture permeability to depth. Mantle probably very low.

Weathering: Andesite east of Silver Creek noted for freshness. Andesite along Thompson Creek is described as barely recognizable, and so is probably much affected by weathering.

Surficial mantle: Probably clayey, similar to other soils on andesite, such as sample MGH2, red-brown clay subsoil on unit 201.

Expansivity: Bedrock unexpansive. Mantle probably expansive, as inferred from sample MGH2, mildly cracked clay subsoil, free swell 90 percent.

Source: Crittenden, 1951.

MAP UNIT 201

Geologic unit, (age), and location: Andesite, about 3 miles northwest of Anderson Reservoir, southeast of San Jose.

Summary: Largely andesite, but some serpentinite included in mapped body. Hard where fresh, hard to firm where weathered. Probably most mantle is expansive.

Composition: Largely andesite, mildly vesicular, but some serpentinite included in mapped body. Probably shallow intrusive by inference from unit 200. Much is brecciated or sheared.

Hardness: Hard where fresh, hard to firm where weathered; rock mass is firm owing to brecciation and shearing.

Bedding: Probably absent.

Parting: Largely absent.

Fracture: Close to moderate spacing; hard medium blocks on ground surface.

Permeability: Bedrock has very low intergranular permeability, probably low fracture permeability to depth. Most mantle very low to low.

Weathering: Weathers from fractures inward.

Surficial mantle: Largely clayey (subsoil). Mapped unit includes some moderately cracked dark clay soil over serpentinite.

Expansivity: Bedrock unexpansive. Probably most mantle expansive, much severely expansive (subsoil). Sample MGH2, mildly cracked red-brown clay subsoil, free swell 90 percent.

Source: One station.

MAP UNIT 202

Geologic unit, (age), and location: Andesitic to dacitic plugs and intrusive complexes of the Sonoma Volcanics (T), in area between Santa Rosa Valley and Howell Mountains.

Summary: Andesitic to dacitic intrusive rock and intrusive complexes (areas of abundant intrusions). Intrusive rock is hard, has close to wide, mostly moderate, fracture spacing, and some has close to very close parting. Topographically resistant. Ripped with difficulty, some blasting may be necessary.

Composition: Andesitic to dacitic intrusive rock, in many places porphyritic and (or) vesicular. In area east of Napa, unit is predominantly breccia of blocks of andesite as large as 1 ft in diameter in matrix of smaller blocks and chips. Long, narrow mapped bodies of unit are entirely intrusive rock, whereas wide and irregularly shaped bodies contain other materials in addition to numerous 10- to 30-ft-wide bodies of intrusive rock.

Hardness: Intrusive rock is uniformly hard to the ground surface, where it generally crops out. In area east of Napa, breccia of hard blocks in firm matrix.

Bedding: Absent.

Parting: Present in some intrusive rock at close to very close spacing, about parallel to borders of intrusive body. Absent in much rock, incipient in some. Emphasized by weathering.

Fracture: Spacing ranges from close to wide, generally either close to moderate or moderate to wide. Orderly prismatic jointing in places. In places, fractures are lined by white altered rock as thick as about 0.1 in. on fracture-bounded blocks.

Permeability: Bedrock has very low intergranular permeability, probably low fracture permeability to depth. In area east of Napa, breccia has low to moderate intergranular permeability. Mantle probably variable, moderate to very low.

Weathering: Mostly crops out or nearly crops out, fresh to ground surface. Where incipient parting is present, parting may be developed by weathering at ground surface or within about 1 ft of surface.

Surficial mantle: Absent (in outcrop) to thin (about 1 ft), granular to clayey, containing many small to medium hard blocks.

Expansivity: Bedrock largely unexpansive. Probably some mantle expansive. See samples for unit 234.

Sources: K.F. Fox, oral commun., 1972-73; Fox and others, 1973; four stations.

MAP UNIT 203

Geologic unit, (age), and location: Rhyodacite intrusions (T), near Marsh Creek, east of Mount Diablo.

Summary: Rhyodacitic intrusive rock, largely as sills and dikes, some plugs. Largely hard; moderate to wide fracture spacing, but some blocks as large as 10 ft in diameter. Largely clayey mantle, probably much to most is significantly expansive.

Expression in aerial photographs: Somewhat resistant bumps.

Composition: Rhyodacite, containing phenocrysts of plagioclase, prominent biotite, and hornblende in microcrystalline to cryptocrystalline groundmass of about 30 percent quartz, 35 percent potassium feldspar, and 25 percent plagioclase (An 32-35) (Pampeyan, 1963). Previously called micaceous hornblende andesite (Turner, 1891; Taff, 1935). May include minor metamorphosed Cretaceous sedimentary rock.

Hardness: Hard where fresh; largely hard, some firm, where weathered. Country rock is metamorphosed, probably hard, within 2-10 ft of contact (Turner, 1891; Pampeyan, 1963).

Bedding: Absent. Some is banded. Occurs largely as sill-like masses (Taff, 1935), lesser plug-like masses.

Parting: Absent.

Fracture: Largely moderate to wide spacing, much of each, probably dominant moderate, but some blocks as large as 10 ft in diameter.

Permeability: Bedrock has very low intergranular permeability, probably low fracture permeability to depth. Probably most mantle low to very low, some to much moderate.

Weathering: Some rock flakes where well weathered.

Surficial mantle: Probably largely clayey, some to much granular.

Expansivity: Bedrock unexpansive. Probably most mantle significantly expansive. Sample AS45, brown clayey soil, typical, free swell 53 percent.

Sources: Pampeyan, 1963; Taff, 1935; Turner, 1891; one station.

MAP UNIT 204

Geologic unit, (age), and location: Rhyolitic plugs and dikes of the Sonoma Volcanics (T), in area between Santa Rosa Valley and Howell Mountains.

Summary: Intrusive rhyolite to rhyodacite variably composed of coherent rock, breccia, and highly vesicular to pumiceous rock. Coherent rock is mostly hard and resistant; it could require blasting in places. Mantle probably thin and largely unexpansive.

Expression in aerial photographs: Topographically resistant rock; generally protrudes from surrounding terrain as buttes, knife-edges, or less dramatic steep, prominent topography.

Composition: Rhyolite to rhyodacite, glassy to lithoidal, flow banded, and locally perlitic. Composed of either coherent rock, breccia of small to medium blocks in matrix of very close fractured rock, or highly vesicular to pumiceous rock.

Hardness: Coherent rock, both rhyolite and glass, is mostly hard, but is firm in places, both where weathered and fresh. Brecciated rock has hard blocks, which are fresh to near the ground surface, in matrix of very closely fractured rock that is firm to soft where weathered. Vesicular rhyolite is firm to soft.

Bedding: Absent. Much rhyolite has flow banding.

Parting: Present at close to moderate spacing in some flow-banded rhyolite, parallel to bands.

Fracture: Generally close to moderate spacing in coherent rock; small to medium blocks in breccia.

Permeability: Very low intergranular permeability, probably low fracture permeability to depth, in coherent bedrock; moderate to high intergranular permeability in breccia. Probably most mantle moderate, some low.

Weathering: Coherent rhyolite is fresh to ground surface except for some weathering along fractures; perlitic glass probably is commonly weathered firm to depth of 10 ft. Matrix of breccia weathered to depth of more than 25 ft, pieces fresh.

Surficial mantle: Probably largely granular, some clayey; thin to absent.

Expansivity: Bedrock largely unexpansive. Most mantle probably unexpansive, some may be expansive. See units 218 and 240.

Sources: K.F. Fox, oral commun., 1972-73; Fox and others, 1973; one station.

MAP UNIT 210

Geologic unit, (age), and location: Putnam Peak Basalt (T), in English Hills, north of Vacaville.

Summary: Hard, dense, olivine-bearing basalt, having variably crude columnar jointing at moderate spacing. Forms cliffs.

Composition: Olivine-bearing basalt, some porphyritic; almost entirely dense, hard rock. Minor vesicular rock near top; no scoriaceous rock; local interflow breccia. Durrell (1959) reported that it is almost impossible to find interflow contacts. Minor pillow basalt at Drakes Point (Thomasson and others, 1960).

Hardness: Uniformly hard.

Bedding: Minor flow banding in places.

Parting: Parting parallel to flows is absent or rare (Durrell, 1959).

Fracture: Columnar jointing perpendicular to flows is irregular or poorly developed in part, mostly at moderate, rarely wide, spacing. Other irregular joints produce medium blocks. Weaver (1949) characterized fracture as splintery to subconchoidal. Blocks 20-30 ft in diameter have moved down hillsides.

Permeability: Bedrock has very low intergranular permeability, low to possibly moderate fracture permeability persisting to depth. Mantle probably largely low to very low, much may be moderate.

Weathering: Alters rock to red-brown color, especially along fractures, but rock is largely hard and fresh to ground surface. Forms cliffs.

Surficial mantle: Probably largely clayey, much may be granular. Much thin to absent.

Expansivity: Bedrock unexpansive. Mantle probably largely expansive.

Stratigraphic thickness: 25-300 ft.

Sources: Durrell, 1959; Weaver, 1949; Thomasson and others, 1960; one station.

MAP UNIT 211

Geologic unit, (age), and location: Basalt (QT), only near Concord.

Summary: Probably Quaternary flow (Taff, 1935) on surface eroded into unit 373, overlain by alluvial deposits. Hard rock, expansive clay soil.

Expression in aerial photographs: Resistant intermediate topography, but no topographic style has developed owing to occurrence in small, isolated patches. Supports trees; light tone.

Composition: Olivine basalt, reported to be finely porous to vesicular, much having flow structure (Taff, 1935). Minor red vesicular basalt near south edge of exposure.

Hardness: Largely ringing hard; highly vesicular rock probably quite firm. No weathered rock observed.

Bedding: Absent.

Parting: Absent in exposures observed; possibly present in some rock owing to flow structure reported by Taff (1935).

Fracture: Spacing ranges from moderate to very wide (7 ft), mostly wide to 5 ft in outcrop; strikingly widely fractured in outcrop. Much may have moderate spacing, as this rock has been quarried for paving (Taff, 1935).

Permeability: Bedrock has very low intergranular permeability, low to possibly moderate fracture permeability to depth. Probably most mantle very low.

Weathering: In exposures observed, weathering effects are absent and fresh rock crops out.

Surficial mantle: Probably largely clayey.

Expansivity: Bedrock unexpansive, most mantle expansive. Sample CL26, moderately cracked typical clay soil, free swell 100 percent (exaggerated).

Sources: Taff, 1935; Turner, 1891; two stations.

MAP UNIT 212

Geologic unit, (age), and location: Clear Lake Volcanics (called volcanic rocks of Clear Lake area by Fox and others, 1973), olivine basalt member (Q), near northern boundary of region northeast of Napa Valley.

Summary: Hard olivine basalt that has moderate to 5-ft fracture spacing. Most can be ripped, some blasting required. Minor firm tuff at base in places (see unit 271). Thin, stony clay mantle, where present, is largely expansive.

Composition: Olivine basalt, mostly vesicular. Includes minor lapilli tuff at base.

Hardness: Hard where fresh, firm where weathered. Tuff is firm.

Bedding: Includes as many as three principal flows, ranging from a few feet to about 100 ft thick (Brice, 1953).

Parting: In places, crude parting parallel to elongate vesicles at moderate to wide spacing.

Fracture: Moderate to very wide (5-ft) spacing, irregular except where parallel parting exists, in which case fracture is about perpendicular to parting. Where unit forms palisades, fracture is crudely columnar about perpendicular to the layer at wide to 5-ft spacing. Fracture spacing in tuff is unknown.

Permeability: Intergranular permeability of basalt (almost all of unit) very low; fracture permeability probably low, extending to depth. Tuff has low intergranular permeability. Mantle probably largely very low to low.

Weathering: Extends to unknown depth along fractures, leaving firm or soft material as thick as about 0.5 in. on some fractures. Weathering of surface rock varies from absent (outcrop of hard rock) to maximum depth of 5 ft; where no outcrop, rock is generally weathered firm within 2 ft of ground surface. Outcrop extends over about half of ground surface.

Surficial mantle: Thin, probably largely clayey where present. Red stony clay soils, such as sample AES1, are typical.

Expansivity: Bedrock unexpansive. Mantle, where present, is probably largely expansive. Sample AES1, red stony clay soil, mildly cracked, typical, free swell 79 percent.

Stratigraphic thickness: Variable because lava flowed onto an uneven surface; total thickness of 550 ft in main basalt area near Clear Lake includes flows from several feet to about 100 ft thick (Brice, 1953).

Sources: Brice, 1953; Fox and others, 1973; one station.

MAP UNIT 213

Geologic unit, (age), and location: Bald Peak Basalt (T), in the East Bay Hills.

Summary: Basaltic flow rock, close to wide fracture spacing. Resistant unit on the whole, but some parts are not very resistant. Mantle largely significantly expansive.

Composition: Largely basaltic flow rock in three flows. Lower two flows are porphyritic olivine basalt that have large plagioclase and olivine phenocrysts in an aphanitic groundmass. Overlying these flows is a tuff of variable thickness, which is in turn overlain by a third flow, described as doleritic, that is coarser grained than the lower two. Flow surfaces show oxidized (red) froth. Unit includes very minor interbeds of conglomerate, sandstone, and siltstone, which include abundant volcanic fragments, and a lens of freshwater limestone.

Hardness: Flow rock is hard where fresh; where weathered, consists of hard medium to large blocks in firm to soft weathered clayey matrix. Weathered matrix makes up 50-70 percent of rock in upper 20 ft. Tuff is probably firm fresh, firm to soft weathered.

Bedding: Three flows and one very thick (20-ft) bed of tuff.

Parting: About half of flow rock observed has roughly parallel fracture at close to wide spacing. Also at rare bedding planes.

Fracture: Close to wide spacing, rarely as much as 5 ft. Hard blocks in weathering zone are mostly medium to large owing to softening of small pieces; Radbruch (1969) reported that blocks are as large as 1 ft in diameter. Uppermost flow has crude columnar structure and tendency toward spheroidal weathering.

Permeability: Flow rock has very low intergranular permeability and low to moderate fracture permeability to depth. Permeability of minor tuff and sedimentary rock unknown. Most mantle low to very low.

Weathering: To depths greater than 20 ft along fractures. Close-fractured pieces weather spheroidally to firm or soft material; medium to large pieces remain hard to surface in places, in other places most is firm to soft in upper 10 ft.

Surficial mantle: Largely clayey, stony. Thin (2-3 in.) according to Radbruch (1969).

Expansivity: Almost all bedrock is unexpansive, but tuff (minor) is severely expansive where weathered. Most mantle significantly expansive. Samples: BV31B, clayey weathered tuff, moderately cracked, minor constituent, free swell 110 percent; BV31A, stony clayey soil, typical, free swell 62 percent.

Stratigraphic thickness: 375 ft (Lawson and Palache, 1902); 200 ft (J.R. Wagner, written commun., 1973); 300-350 ft (Lawson, 1914).

Sources: Case, 1963; Lawson, 1914; Lawson and Palache, 1902; Radbruch, 1969; Radbruch and Case, 1967; J.R. Wagner, written commun., 1973; Wagner, 1978; one station.

MAP UNIT 214

Geologic unit, (age), and location: Basalt flows of the Sonoma Volcanics (T), near Santa Rosa Valley.

Summary: Largely basalt flows, minor to some tuff. Basalt is fresh and hard to near ground surface; weathers to bouldery rubble. Blasting required in some for excavation. Mantle is thin, and probably most is significantly expansive.

Expression in aerial photographs: Resistant unit, but not very thick or extensive; very resistant where mapped as thin bands. Intermediate topography, much irregular.

Composition: Most is aphanitic basalt, dark gray to black, porphyritic; some dense, some very vesicular, some amygdaloidal. Contains scattered phenocrysts of labradorite, olivine, and augite, and in places clumps of olivine. Unit includes minor to some pumice lapilli tuff, dacitic in composition, that in places contains minor lithic fragments as large as 6 in. in diameter.

Hardness: Basalt is ringing hard where fresh; most rock breaks only with difficulty along conchoidal fracture. Where spheroidally weathered, rock between hard cores is firm. Basalt blocks in surficial mantle are hard. Tuff is firm where fresh and weathered.

Bedding: Basalt in distinct layers (flows), mostly 10-30 ft thick, in places as thick as 100 ft, between tuff of lesser thickness. Basalt locally has distinct flow banding.

Parting: Largely absent.

Fracture: Spacing in basalt is moderate to very wide (6 ft). Local columnar jointing; in places, pillow structure defines effective fracture spacing.

Permeability: Flow rock (most of unit) has very low intergranular permeability, but low to possibly moderate fracture permeability to depth. Very vesicular rock may have moderate intergranular permeability where vesicles are interconnected (not observed). Intergranular permeability in tuff (minor to some of unit) is low. Probably most mantle low.

Weathering: Fresh rock extends to very near ground surface, where weathering attacks joints and leaves a mass of hard bouldery rubble. Spheroidal weathering in places. Soil contains many blocks of hard rock.

Surficial mantle: Probably largely clayey like unit 234, but much may be granular. Most is rocky and thin, but as thick as 5 ft.

Expansivity: Bedrock largely unexpansive. Probably most mantle significantly expansive, possibly severely expansive locally. Sample HL8, uncracked thin silt soil, typical, free swell 60 percent. Expansivity probably similar to unit 234.

Sources: Gealey, 1951; Travis, 1952; three stations.

MAP UNIT 215

Geologic unit, (age), and location: Leona Rhyolite (T?), in the East Bay Hills near Oakland.

Summary: Hard to firm, variably fractured rhyolite. In places requires blasting (Radbruch, 1969). Rock used for fill, subgrade, and aggregate, inspected by State for sulfides. Runoff is very acid and corrodes concrete pipes (Radbruch, 1969). Much mantle lacking or thin, some is expansive. Minor expansive bedrock.

Composition: Soda rhyolite, largely lithoidal; includes some porphyritic glass, rare vesicular rock, very rare pyroclastic debris. Generally consists of a few percent (locally as much as 15 percent) phenocrysts in groundmass of microcrystalline albite and quartz; less commonly groundmass is spherulitic glass (Robinson, 1953). Rock is commonly a mixture of quartz, argillized feldspar, clay, and wisps of chlorite, and iron-stained pits mark former pyrite grains. Sulfides are universally present in fresh rock and are concentrated near base of unit by secondary sulfide enrichment; largely absent in weathered rock. Average fresh rock contains 1-2 percent pyrite (G.D. Robinson, 1953, oral commun., 1973). Some rock is altered. Fractures in weathered rock are iron stained.

Hardness: Largely hard where fresh. Where weathered, most pieces are hard, some firm; rock mass is firm to soft where fracture spacing is close to very close. Breccia zones and altered rock are firm, some soft and clayey.

Bedding: Absent. No signs of layering in even largest quarry exposures. Locally flow banded.

Parting: Absent.

Fracture: Variable and apparently random. Mostly very close to wide spacing, but includes excavated blocks to very large (5 ft, some as much as 8 ft) that have internal incipient fracture at very close to wide spacing. Much brecciation in places. Weathered vesicular rock has close to very close spacing of weathering fracture in medium spheroids.

Permeability: Bedrock has very low intergranular permeability, low to possibly moderate fracture permeability to depth. Most mantle probably moderate, some to much low to very low.

Weathering: Variable. Some hard rock extends to ground surface, but some firm weathered rock and spheroidal fracture extends to depths of more than 35 ft.

Surficial mantle: Largely granular, some to much clayey. Most mantle is stony silt; some is stony clay, such as sample OE36A. Soil is generally absent or less than 18 in. thick, but it may accumulate in ravines to more than 12 ft thick (Radbruch, 1969).

Expansivity: Most bedrock is unexpansive, minor severely expansive (gouge and weathered bedrock). Most mantle unexpansive, some expansive. Bedrock samples: OE36C, mildly cracked weathered bedrock, minor, free swell 71 percent; HAY12, moderately cracked clayey weathered bedrock, occurs locally in pockets, free swell 97 percent; OE37, clayey gouge, free swell 88 percent. Surficial mantle sample OE36A, mildly cracked clay soil that overlies some of unit, free swell 78 percent. Most mantle is uncracked.

Stratigraphic thickness: Generally less than 100 ft, maximum of 800 ft; some dikes to depth.

Sources: Clark, 1917; Lawson, 1914; Radbruch, 1969; Radbruch and Case, 1967; Robinson, 1953; G.D. Robinson, oral commun., 1973; five stations.

MAP UNIT 216

Geologic unit, (age), and location: Rhyolite (T), includes Alum Rock Rhyolite of Crittenden (1951), east of San Jose.

Summary: Hard rhyolite that is more or less silicified, fracture spacing very close to 8 ft. Sulfides present at least in places. Includes minor soft vesicular rock in places near margin. Strikingly resembles Leona Rhyolite (Crittenden, 1951).

Expression in aerial photographs: Bluffs and talus slopes that contain blocks as large as 20 ft in diameter.

Composition: Rhyolite, largely dense (nonvesicular), consisting largely of orthoclase and quartz. Rock contains phenocrysts as large as 2 mm in places; lacks ferromagnesian minerals except sulfides that are present at least in places; is more or less silicified; and is stained by limonite. At extreme northwest end and in a few places around margin, includes soft vesicular rock that is probably more basic in composition (Crittenden, 1951). Unit is dominantly hard dense rock; minor soft vesicular rock in places on margin.

Hardness: Hard pieces; some firm rock mass where fracture spacing is close to very close. Minor vesicular rock soft to firm.

Bedding: Absent.

Parting: Absent, except along parallel joints.

Fracture: Highly variable; spacing ranges from very close to very wide (8 ft). Much is fractured at very close to moderate spacing, but prominent major fractures have wide to 8-ft spacing. Talus shows much moderate to wide spacing, but some blocks are as large as 20 ft in diameter. On the whole, most has very close to wide spacing, some very wide. Described as strongly jointed (Crittenden, 1951).

Permeability: Bedrock has very low intergranular permeability, low to possibly moderate fracture permeability to depth. Most mantle probably moderate, some to much low to very low.

Weathering: No observation; assume similar to unit 215.

Surficial mantle: Probably largely granular, some to much clayey. Unit mostly underlies steep canyon walls that have little soil.

Expansivity: Bedrock largely unexpansive, possibly minor severely expansive. Probably most mantle unexpansive, some expansive. Inferred from samples of unit 215.

Sources: Crittenden, 1951; Templeton, 1912; one station.

MAP UNIT 217

Geologic unit, (age), and location: Clear Lake Volcanics (QT), in Mayacmas Mountains at northern boundary of region.

Summary: Not seen in field. Probably like unit 218; largely hard rhyolitic flow rock, minor to some breccia, tuff breccia, tuff, and scoriaceous rock.

Sources: Blake and others, 1971; McLaughlin, 1978.

MAP UNIT 218

Geologic unit, (age), and location: Rhyolitic flows of the Sonoma Volcanics (T), in general area between Petaluma Valley and Howell Mountains, excluding area near Calistoga.

Summary: Almost all is hard flow rock that has moderate to very wide (10-ft) fracture spacing and very close to very wide (4-ft) parallel parting. Includes minor breccia, scoria, tuff, tuff breccia, and hydrothermal alteration. Some bedrock and mantle is expansive, most is unexpansive.

Composition: Almost all is rhyolitic to rhyodacitic lithoidal flow rock; much contains tabular phenocrysts and vesicular cavities and much is flow banded. Includes minor vitrophyre (porphyritic glass), commonly at base of flows; volcanic breccia and tuff breccia containing blocks as large as 3 ft in diameter, but mostly less than 1 ft; scoriaceous rock; and lithic or pumiceous tuff. May be intrusive locally. Hydrothermally altered in a few places. Probably 90 percent or more of unit is flow rock, 10 percent or less fragmental rock.

Hardness: Lithoidal flow rock is generally hard to the ground surface, but some weathers firm. Vitrophyre is firm where weathered, hard where fresh. Breccia and tuff breccia, where fresh, have hard blocks in hard to firm or soft matrix; where weathered, they have hard to firm blocks in firm to soft matrix. Scoriaceous rock is firm where weathered, probably firm to hard where fresh. Tuff is generally firm both where fresh and weathered.

Bedding: Absent within flows, except for flow banding.

Parting: Present within flow rock, although variable in spacing. In some exposures, most rock has very close to moderate spacing, mostly close, parallel to flow banding. This parting commonly changes orientation (is folded) in outcrop-scale exposures. Other exposures show thick to very thick (4-ft) sheets bounded by parting surfaces, and some of these sheets have moderately spaced incipient parting parallel to the sheets. Scoriaceous rock, at least in places, has moderate spacing.

Fracture: In lithoidal flow rock, fracture spacing ranges from moderate to 10 ft; spacing is mostly moderate to 6 ft and in many places wide to 6 ft. Vitrophyre has close spacing where weathered, probably spacing similar to flow rock where fresh. In breccia and tuff breccia, fracture spacing is effectively the size of blocks, which are medium to large. Scoriaceous rock has moderate spacing. Most tuff has moderate to wide spacing, some very wide, as described for units 270 and 272.

Permeability: Lithoidal flow rock and vitrophyre (almost all of unit) have very low intergranular permeability, probably low fracture permeability to depth. Most breccia has low intergranular permeability, but moderate or high in some zones. Low intergranular permeability in scoriaceous rock and tuff. Probably most mantle moderate, some low to very low.

Weathering: Lithoidal flow rock mostly crops out fresh or is shallowly weathered (within 3 ft of ground surface), but it may be weathered to clayey material along fractures to depths of more than 20 ft. Vitrophyre and scoria are weathered to depths of more than 6 ft. Matrix of breccia and tuff breccia may be weathered clayey to depths of more than 15 ft.

Surficial mantle: Probably largely granular, some clayey; in most places thin (less than 3 ft) to absent.

Expansivity: Almost all bedrock is unexpansive, but minor to some is expansive, particularly where hydrothermally altered. Most mantle unexpansive, some expansive. Samples: SN8A, bedrock, free swell 69 percent; SN8B, soil, free swell 86 percent; SN9, soil, free swell 62 percent. Also sample SH17A from unit 240, clayey mantle on unaltered rhyolite, free swell 31 percent.

Sources: K.F. Fox, oral commun., 1972-73; Fox and others, 1973; Kunkel and Upson, 1960; 10 stations.

MAP UNIT 219

Geologic unit, (age), and location: Perlitic rhyolite of the Sonoma Volcanics (T), in area between Santa Rosa Valley and Howell Mountains.

Summary: Most is flows and plugs of perlite (perlitic glass) and typical rhyolitic flow rock; minor tuff and tuff breccia. Flow rock in thick to very thick beds. Rock is hard where fresh, perlite weathers firm to soft. Some moderate and high permeability in weathered perlite. Almost all mantle and bedrock is unexpansive.

Expression in aerial photographs: Sharp rugged topography, similar to unit 218.

Composition: Most to almost all is perlite (volcanic glass that has perlitic texture owing to very closely spaced cooling cracks) and nonperlitic, lithoidal rhyolite similar to unit 218; minor interbedded tuff and tuff breccia. Perlite constitutes probably 50 percent of unit as a whole, but varies from 10-80 percent. Perlite, where fresh, is hard and similar in engineering properties to typical rhyolitic flow rock, but it weathers more rapidly and deeply.

Hardness: Perlite is hard where fresh, but weathers firm to soft and to loose glass sand where extremely weathered; most weathered exposures are firm, some soft. Some fractures in firm weathered rock are cemented hard, and weathered rock is case hardened in places. Nonperlitic rhyolite as described for unit 218. Tuff is firm; tuff breccia has firm matrix and hard blocks.

Bedding: Rhyolite and perlite in most places are interlayered in thick to very thick layers; perlite commonly is tens of feet to as much as several hundred feet thick (Davis, 1948). Thin to very thin internal banding is common.

Parting: Present in rhyolitic flow rock as described for unit 218, and locally in perlite at wide to very wide spacing.

Fracture: In fresh perlite, spacing is moderate to 8 ft. In firm weathered perlite, spacing typically is moderate, but locally as much as 4 ft; in soft, well-weathered perlite, spacing is close to very close. Nonperlitic rhyolite as described for unit 218.

Permeability: Very low intergranular permeability in bedrock; low fracture permeability to depth in both perlite and nonperlitic rhyolite, some moderate in weathered perlite. Well-weathered perlite is highly permeable sand of glass beads. Most mantle moderate, some low to very low.

Weathering: Perlite generally is weathered firm to depth of 10 ft, but in places contains hard blocks of perlite within predominantly firm weathered material, and in other places hard rock crops out. Weathers soft to depth of 2 ft or more, in places to depth of 7 ft or more. Cut slopes weather rapidly to loose glass sand. Free clay appears only in soft weathered rock and soil.

Surficial mantle: Largely granular (clayey sand).

Expansivity: Almost all bedrock and mantle are unexpansive, but minor to some of each may be expansive. Samples: SR9, sheared and somewhat weathered perlitic bedrock, mildly cracked, moldable although largely glass, abnormally high clay content, minor constituent, free swell 43 percent; SR6, typical clayey sand soil, free swell 28 percent.

Sources: Davis, 1948; K.F. Fox, oral commun., 1972-73; Fox and others, 1973; eight stations.

MAP UNIT 220

Geologic unit, (age), and location: Soda rhyolite flows of the Sonoma Volcanics (T), in area between Santa Rosa Valley and Howell Mountains.

Summary: Uniformly hard soda rhyolite flow rock and minor cemented lithic tuff breccia. Flow rock occurs in sheets that typically are thick and have moderate to 4-ft fracture spacing. Unit forms rugged outcrops.

Composition: Almost all is soda rhyolite as flows and possibly intrusives; minor cemented lithic tuff breccia. Soda rhyolite is largely homogeneous, very fine grained, and lithoidal, but locally it is platy or banded, in places glassy and spherulitic, and locally along northeastern contact it is highly vesicular.

Hardness: Hard except for vesicular zones, which are firm. An uncommonly tough and hard rock.

Bedding: Occurs in parallel sheets that are mostly thick, but in places as thick as 8 ft, more commonly as thick as 4 ft. These sheets are continuous, persistent features of the rock. Some sheets are lined by clay and close-fractured rock.

Parting: Much rock has parting parallel to sheeting at close to moderate or wide spacing, although most slabs are thick. About 10 percent of unit has close to very close parallel parting.

Fracture: Mostly moderate to very wide (4-ft) spacing, much wide to very wide (4 ft), but ranges from close to 8 ft. Where spacing is very wide, most rock has incipient fracture at moderate spacing. Some (30 percent?) has columnar jointing at wide spacing about perpendicular to sheets.

Permeability: Bedrock has very low intergranular permeability, low fracture permeability to depth. Probably much mantle moderate, much low.

Weathering: Mostly unweathered, fresh to ground surface; abundant outcrops.

Surficial mantle: Probably much granular, much clayey; thin and stony where present.

Expansivity: Almost all bedrock is unexpansive, minor may be expansive. Some to much mantle significantly expansive, much to most unexpansive. Sample K16, typical stony clay soil, free swell 49 percent.

Sources: K.F. Fox, oral commun., 1972-73; Fox and others, 1973; one station.

MAP UNIT 221

Geologic unit, (age), and location: Northbrae Rhyolite (T), northwest of Oakland near Berkeley and near San Pablo Reservoir.

Summary: Hard soda rhyolite, fracture spacing ranges from close to 15 ft or more. Crops out as blocky crags. In places requires blasting.

Composition: Hard soda rhyolite, largely flow banded. Palache (1893) recognized three facies: (1) porphyritic facies, of cryptocrystalline groundmass containing quartz and feldspar phenocrysts; (2) spherulitic facies, of glassy spherulitic matrix, commonly vesicular and largely flow banded, constituting more than two-thirds of unit; and (3) minor glass. Also minor silica-cemented breccia. Vesicles as large as 1 in. in diameter. Ferromagnesian minerals and pyrite are absent, but minor magnetite.

Hardness: Largely hard, probably some firm (vesicular rock).

Bedding: Much of unit shows distinct flow banding, in many places folded. Bands are very thin to medium and are defined by concentration of spherulites.

Parting: Present in places along flow banding at wide to 4-ft spacing, in other places absent in intervals as thick as 20 ft. Locally very close spacing along flow banding.

Fracture: Variable; produces coherent blocks as large as 15 ft or more in diameter. Clear planar fracture at moderate to 4-ft spacing; much close to moderate irregular spacing that is incipient in most places. Thus, unit produces a variety of block sizes, from small to 15 ft or more. Palache (1893) reported subconchoidal fracture in less than one-third of unit (porphyritic and glass facies).

Permeability: Bedrock has very low intergranular permeability, low to locally moderate fracture permeability to depth. Probably most mantle moderate, some low.

Weathering: Crops out fresh in the one exposure observed.

Surficial mantle: Probably largely granular, some clayey. Soil is silty where observed, mostly thin.

Expansivity: Almost all bedrock is unexpansive. Probably most mantle unexpansive, some may be expansive.

Stratigraphic thickness: Less than 100 ft.

Sources: Case, 1963; Lawson, 1914; Palache, 1893; Radbruch, 1969; one station.

MAP UNIT 230

Geologic unit, (age), and location: Basalt (T), only along east side of Santa Clara Valley near Morgan Hill.

Summary: Interbedded, about equally abundant basaltic flow rock and tuff breccia; some mostly clean sedimentary rock similar to unit 122. Flow rock is hard; tuff breccia has firm matrix and hard to firm blocks. Some moderate fracture permeability in flow rock and some moderate intergranular permeability in tuff breccia and sedimentary rock. Most to almost all mantle is severely expansive.

Expression in aerial photographs: Varied. Includes resistant, intermediate to hard topography that consists of light-toned ridges as wide as 200-300 ft, probably flows (although much flow rock observed in field does not show on photographs). Most of unit is intermediate to soft topography, showing light-toned subdued lumps in darker matrix. Much of unit is very soft topography, probably benches underlain by tuff breccia or sedimentary rock that are supported by basalt. Much of tuff breccia observed in field shows as light-toned resistant lumps on photographs. Where clearly defined (rare), bands of soft, dark-toned material are as wide as 400 ft. Much detail in tones is visible on photographs.

Composition: (1) Olivine basalt flow rock (Taliaferro, 1948; California State Water Resources Board, 1955); much is vesicular, highly vesicular on tops of flows. (2) Tuff breccia, composed of hard and firm blocks that are small to 4 ft in diameter, mostly medium to large, in firm matrix that is powdery to granular. (3) Clean, soft sandstone and conglomerate, similar to unit 122, but notably clean.

Unit is largely basalt and tuff breccia, each dominant in different places; tuff breccia probably dominates slightly. Some (possibly as much as 20 percent) interbedded sedimentary rock.

Hardness: Nonvesicular and mildly vesicular flow rock is hard and fresh to near ground surface in places, but in other places develops spheroidal weathering of firm crumbly weathered material around cores of hard rock to depths greater than 12 ft. Highly vesicular flow rock is firm where weathered, generally to depths greater than 4 ft. Tuff breccia has matrix that is largely firm, some soft, where weathered, but some tuff breccia may be quite firm (craggy outcrops); most blocks are hard, some firm, both where fresh and weathered. Interbedded sandstone and conglomerate are soft except for hard clasts in conglomerate.

Bedding: Probably largely distinct (flow against tuff breccia against sedimentary rock) and very thick (tens of feet). No bedding observed in tuff breccia. Within sedimentary rock, much medium to very thick distinct bedding.

Parting: Absent in tuff breccia; none observed within flow rock; absent on distinct bedding within sedimentary rock. Thus, present only on very widely spaced contacts between flows, tuff breccias, and sedimentary rock.

Fracture: In flow rock, spacing ranges from close to very wide (4 ft), mostly moderate to wide. Crumbly weathered rock around corestones has close to very close spacing. Tuff breccia has irregularly spaced fracture at moderate to very wide (5 ft), but locally produces coherent blocks as large as 8 ft and more in diameter (below crags), and much has weathering fracture at close to very close spacing. Hard blocks in tuff breccia mostly have moderate to wide spacing. Interbedded sandstone and conglomerate are unfractured.

Permeability: Flow rock (much of unit) has very low intergranular permeability, but low to moderate fracture permeability to depth, as evidenced by abundant springs (California State Water Resources Board, 1955). Tuff breccia (much of unit) has low to less abundant moderate intergranular permeability; low permeability occurs in powdery matrix, moderate permeability in granular matrix, at least in places. Interbedded sandstone and conglomerate (some of unit) have low to moderate intergranular permeability. Most to almost all mantle very low.

Weathering: In places, flow rock is fresh to ground surface, in other places it is weathered spheroidally to depths greater than 12 ft; highly vesicular rock is weathered to depths of more than 4 ft. Tuff breccia weathers to depths of more than 20 ft; interbedded sedimentary rock weathers deeply (more than 20 ft).

Surficial mantle: Almost all clayey, minor to some granular.

Expansivity: Bedrock is largely unexpansive. Most to almost all mantle is severely expansive. Samples: MSZ2, well-cracked dark popcorn clay soil, typical on flow rock, free swell 120 percent; GL4, mildly to moderately cracked dark clay soil, typical of much soil on tuff breccia, free swell 91 percent. Much mantle over tuff breccia appears somewhat less expansive than sample GL4.

Sources: California State Water Resources Board, 1955; Taliaferro, 1948; six stations.

MAP UNIT 231

Geologic unit, (age), and location: Page Mill Basalt (T), only in Santa Clara County near Palo Alto.

Summary: Almost all is basaltic flow rock and agglomerate; minor interbedded tuff. Flows and agglomerate blocks are hard, agglomerate matrix soft to firm. Rock has been quarried at one site. Most mantle is expansive, much or more is severely expansive.

Composition: Almost all is basaltic flow rock and agglomerate in variable proportions, from largely flow rock to largely agglomerate, probably much of each in unit as a whole. Much flow rock is dense, much vesicular. Agglomerate consists of hard, unfractured or slightly fractured blocks in a much softer matrix of ash and lapilli; most blocks are 0.5-2 ft in diameter, but occasional blocks are as large as 3 ft in diameter. Blocks in agglomerate remain fresh where matrix appears to be weathered, altered, or uncemented, which permits blocks to fall out rather easily. Interbedded tuff (less than 5 percent of unit) is present in both agglomerate and flow sections, and some agglomerate is interbedded with flows.

Hardness: Flow rock is hard, some firm where highly weathered or closely fractured. Agglomerate blocks hard, matrix soft to firm. Tuff soft.

Bedding: Flows in basalt are indistinct and 5-15 ft thick; sections of dominant flows are 40-60 ft or more in thickness. Agglomerate sections are as thick as 40 ft or more. Tuff beds are as thick as 6 ft.

Parting: Absent.

Fracture: Mostly close to moderate spacing in flow rock; some very close spacing, but this may be related to a mapped fault. Blocks in agglomerate have mostly moderate spacing.

Permeability: Flow rock (much of unit) has largely very low intergranular permeability, possibly minor to some low in very vesicular flows; low fracture permeability to depth. Agglomerate (much of unit) has mostly low intergranular permeability, some moderate. Tuff (minor) has moderate to high intergranular permeability. Most to almost all mantle very low.

Weathering: Rock is weathered to depths of 10 ft or more; iron-stained and opened fractures extend to depths of 40 ft or more.

Surficial mantle: Most to almost all is clayey.

Expansivity: Most bedrock is unexpansive, but some may be expansive (weathered tuff and agglomerate). Most to almost all mantle is expansive, much or more is severely expansive. Samples: PA51, well-cracked dark clay soil, thick, typical, free swell 101 percent; PA12, soil, free swell 82 percent; PA39, soil(?), free swell 134 percent.

Sources: California State Water Resources Board, 1955; Davis and Jennings, 1954; Dibblee, 1966; Pampeyan, 1970; two stations.

MAP UNIT 232

Geologic units, (age), and location: Page Mill Basalt (T); Mindego Basalt and other volcanic rocks (T); unnamed volcanic rocks (KJ); only in San Mateo County.

Summary: Basaltic rock as flows, breccia, pillow lavas, agglomerate, tuff, and intrusives; minor sandstone and mudstone. Most mantle is expansive.

Composition: Almost all is basaltic rock, largely fine grained; occurs as dense to vesicular flows, flow breccia of 1-12 in. blocks in matrix of glass or calcite, pillow lavas that have pillows 2-5 ft in diameter in matrix of glass or tuff, agglomerate, and less abundant tuff and medium- to coarse-grained intrusive rock. Minor sandstone and mudstone.

Hardness: Where fresh, crystalline rock is hard, glass and tuff probably firm. Weathered rock is mostly firm to soft; glass and tuff are more easily weathered than other compositions. Decomposed basalt is firm to soft and commonly contains hard spheroidal weathering cores of small to large size.

Bedding: Much is indistinct to locally distinct; much rock unbedded.

Parting: Largely absent.

Fracture: Close to moderate spacing, locally wide.

Permeability: Very low to low intergranular and fracture permeability in bedrock at depth. Low to moderate fracture and intergranular permeability in shallow bedrock. Largely low to very low in surficial mantle and decomposed basalt.

Weathering: In places, flow rock is weathered to clayey decomposed basalt to depths of tens of feet.

Surficial mantle: Largely clayey.

Expansivity: Almost all bedrock is unexpansive. Most mantle expansive, some to much severely expansive. Samples: LH10, soil, free swell 64 percent; LH11, soil, free swell 90 percent; MH9, black soil on pillow basalt, free swell 169 percent.

Stratigraphic thickness: Variable, 60-4000 ft.

Source: Ellen and others, 1972.

MAP UNIT 233

Geologic unit, (age), and location: Moraga Formation, basalt and andesite member (T), in the East Bay Hills.

Summary: Largely hard basaltic and andesitic flow rock; some (locally to 50 percent) scoria, tuff breccia, breccia, and interbedded firm sedimentary rock. No evidence of blasting, but Radbruch (1969) reported that flow rock generally requires blasting. Flow rock used for fill, base rock, and riprap (Radbruch, 1969). Much mantle severely expansive.

Expression in aerial photographs: Largely rugged topography, ranging from sharp hard crests to intermediate crests.

Composition: Largely hard basaltic and andesitic flow rock, parts of which are vesicular; some scoria and scoriaceous breccia, tuff breccia of hard medium blocks and bombs in firm matrix, breccia of medium to large blocks in matrix, and sedimentary rock as described for unit 132. Locally scoria, tuff breccia, and breccia constitute 50 percent of unit. Also includes minor well-cemented rhyolite tuff, tight to porous; reported rhyolite breccia; and rare limestone and associated chert. See description by Lawson and Palache (1902).

Hardness: Fresh flow rock, both dense and vesicular, is hard; weathered flow rock is firm. In most exposures, probably where both fresh and weathered, scoria is firm to hard and tough; tuff breccia has hard blocks in firm matrix; breccia has firm to hard blocks in firm to hard matrix. Clastic sedimentary rock is largely firm where weathered, but minor grit (see unit 132) that occurs in beds to thick is hard. Brecciated fracture zones are firm to soft. Rhyolite tuff is generally hard, as is limestone.

Bedding: Flows are distinct and 25-150 ft or more thick; intervals of sedimentary rock are thick to very thick (100 ft); and zones of scoria, breccia, and tuff breccia are very thick (10 ft or more). Within sedimentary rock, distinct compositional changes are medium to very thick (as much as 30 ft or more), mostly very thick, and indistinct bedding within very thick distinct beds is thin to thick. Rhyolite tuff occurs in very thick (10- to 25-ft or more) intervals that are internally distinctly bedded. Rare limestone beds as thick as 40 ft contain chert interbeds.

Parting: Much flow rock has parallel fracture or parting at close to wide spacing, mostly close to moderate, parallel to the flow. Parting is present at contacts between flow rock and sedimentary rock and within sedimentary rock on some bedding planes at very wide spacing. Absent in breccia, tuff breccia, scoria, and in much flow rock. Continuous parting at very close to moderate spacing reported in holocrystalline andesite subunit (Lawson and Palache, 1902).

Fracture: Most hard flow rock is fractured at close to wide spacing (mostly less than 2 ft); in places, major fractures at spacing as wide as 5 ft, rarely as wide as 10 ft, define blocks that have incipient internal moderate to wide spacing. Scoria has moderate to 5-ft spacing, some probably as much as 10 ft. Breccia has moderate to very wide (6-ft) spacing. Most sedimentary rock has close to moderate spacing, some wide in hard grit.

Permeability: Flow rock (most of unit) has very low intergranular permeability, low to moderate fracture permeability to depth (as judged from springs at contact with unit 154). Breccia, tuff breccia, scoria, and sedimentary rock (some of unit) have mostly low to very low intergranular permeability, but probably some moderate. Most mantle very low to low.

Weathering: Weathers along fractures. Flow rock is weathered firm to depths of 4-35 ft or more, depending on fracture spacing; closely fractured rock weathers deeply. In sedimentary rock, sandstone is weathered to depths of more than 20 ft, mudstone as deep as 15 ft. Tops of individual flows are oxidized red.

Surficial mantle: Largely clayey. Radbruch (1969) reported sparse, generally clayey soils and accumulations of clayey mantle as thick as 60 ft.

Expansivity: Bedrock is largely unexpansive, but minor may be severely expansive (particularly mudstone). Much mantle is severely expansive, much significantly expansive to possibly unexpansive. Of mantle, much is mildly cracked; some is moderately cracked, such as sample OE2, stony clay soil, free swell 123 percent; and some is well cracked, such as sample BV33, dark clay soil, free swell 109 percent.

Stratigraphic thickness: Bands mapped are 300 and 600 ft thick (inferred from Lawson and Palache, 1902). Entire Moraga Formation has maximum thickness of about 1,200-1,300 ft.

Sources: Case, 1963; Lawson, 1914; Lawson and Palache, 1902; Radbruch, 1969; Radbruch and Case, 1967; five stations.

MAP UNIT 234

Geologic unit, (age), and location: Andesitic to basaltic flows of the Sonoma Volcanics (T), in area between Santa Rosa Valley and Howell Mountains.

Summary: Hard and generally moderately fractured flow rock interlayered with fragmental rock of hard blocks in firm matrix. Most mantle is significantly expansive to unexpansive, some severely expansive.

Expression in aerial photographs: Generally shows prominent layers 40-120 ft in width.

Composition: Andesitic to basaltic lava flows, variably porphyritic and vesicular and in part scoriaceous, interlayered with or grading to flow breccia of andesitic or basaltic blocks, and interlayered with scoriaceous tuff breccia, agglomerate, volcanic breccia, and ash-flow tuff. Flows typically have coherent rock at base, but vesicular to scoriaceous, commonly brecciated rock toward their tops and distal edges. A discontinuous baked, hardened, red-orange zone as thick as several feet commonly underlies the base of each flow. Flow breccia, volcanic breccia, agglomerate, and tuff breccia consist of blocks or bombs of largely andesitic to basaltic rock as large as 5 ft in diameter, mostly 1 ft or less, in matrix of lapilli tuff, coarse and fine ash tuff, tuffaceous sedimentary rock, or unidentified fine-grained material. Blocks and bombs make up more than 50 percent of volcanic breccia and agglomerate and 5-50 percent of tuff breccia. Interlayered tuff is typically ash-flow tuff, as described for unit 270.

Proportions of flow and fragmental rock are variable. Unit on the whole is estimated to be about 75 percent flow rock and 25 percent fragmental rock, but in places fragmental material constitutes 50 percent of unit.

Hardness: Flow rock is hard where fresh, firm to soft where weathered. Breccia and tuff breccia contain hard blocks in firm matrix where fresh, hard and soft blocks in soft matrix where weathered.

Bedding: Flow rock is interlayered with interflow breccia, agglomerate, volcanic breccia, tuff breccia, and tuff in distinct beds that are variably very thick. Individual flows pinch and swell abruptly along strike, but are mostly 15-25 ft thick, exceptionally as thick as 50 ft. Interflow zones are of similar or lesser thickness. Aerial photographs show distinct bands 40-120 ft in width.

Parting: Present at flow contacts, within much flow rock at moderate to 4-ft spacing, and in perhaps 25 percent of flow rock at close to very close spacing. In rock that has wide or moderate spacing of parting, incipient parting at close to very close spacing is common. Parting is accentuated by weathering.

Fracture: In flow rock, fracture spacing ranges from close to very wide (8 ft); most spacing is moderate, but some is close and, in places, some is wide. Columnar jointing, probably at moderate spacing, is present in a few places, and poorly defined pillow structure of medium to large pillows is present locally, but fracture appears randomly oriented in most flow rock. Fracture spacing in breccia and tuff breccia generally is effectively the size of blocks, but large blocks commonly are fractured at close to moderate spacing. Tuff matrix in tuff breccia has moderate spacing where fresh, very close spacing where weathered.

Permeability: Flow rock (most of unit) has very low intergranular permeability, low to possibly moderate fracture permeability to depth except shallow rock probably low. Fragmental rock (some of unit) has largely low intergranular permeability, locally moderate. One observation of a spring at base of flow over interflow breccia. Most mantle low to very low.

Weathering: Flow rock weathers irregularly; some blocks remain hard to the ground surface, other zones weather uniformly firm to depths of 15 ft or more. Weathering generally progresses along fractures and is commonly spheroidal around fracture-isolated blocks. As a consequence, the weathered zone, which is generally 3-15 ft deep but may be deeper than 20 ft, contains hard blocks in firm and soft clayey matrix that crumbles to granular material.

Fragmental rock weathers to depths of more than 5 ft, and in places to more than 20 ft, depending on the matrix. Weathered matrix is soft, and blocks range from hard to soft. Weathered material is clayey; free clay is produced in weathering.

Surficial mantle: Largely clayey, typically red, containing hard blocks. Soil is thin (1-2 ft) in many places, but mostly thicker than other soils on Sonoma Volcanics.

Expansivity: Almost all bedrock is unexpansive, minor severely expansive weathered bedrock. Most mantle significantly expansive to unexpansive, some severely expansive. Bedrock samples: K15, clay between blocks in weathered zone, minor, free swell 160 percent; MWS11A, blue-gray clay gouge, minor, free swell 92 percent. Surficial mantle samples: MWS11B, clayey soil, typical at this station, free swell 87 percent; GE11A, dark clay soil on fragmental rock, typical, free swell 116 percent; GE11B, typical soil on flow rock, free swell 50 percent; CA9, uncracked typical red clay soil, free swell 60 percent; MWS16, soil, free swell 40 percent; CA8, typical red clayey soil, very mildly cracked, free swell 52 percent.

Sources: K.F. Fox, oral commun., 1972-73; Fox and others, 1973; Kunkel and Upson, 1960; 16 stations.

MAP UNIT 235

Geologic unit, (age), and location: Andesitic and basaltic flows of the Sonoma Volcanics (T) disturbed by landsliding, near Wooden Valley northeast of Napa.

Summary: Not seen in field. Largely andesitic flow rock, some fragmental rock. Composition, physical properties, expansivity, and surficial mantle texture are similar to unit 234, but rock mass is broken by landslide movement into coherent blocks 500 ft or more in width. Disruption has probably created much moderate and high fracture permeability in bedrock at shallow and intermediate depths.

Source: K.F. Fox, oral commun., 1972-73.

MAP UNIT 236

Geologic unit, (age), and location: Sonoma Volcanics (T), in vicinity of Burdell Mountain, Marin highlands.

Summary: Not seen in field. Largely andesitic to basaltic flows and fragmental rock, similar to unit 234. Rhyolite like unit 218 is present near base of unit at Burdell Mountain and possibly elsewhere.

Sources: J.A. Bartow, oral commun., 1973; R.L. Rose, oral commun., 1973.

MAP UNIT 237

Geologic unit, (age), and location: Andesitic to basaltic flows of the Sonoma Volcanics interbedded with fine-grained sedimentary rocks including diatomite (T), in the Sonoma Mountains.

Summary: Andesitic to basaltic lava flows, similar to unit 234, interlayered with predominantly very fine grained tuffaceous and diatomaceous sedimentary rock and diatomite. Flows and sedimentary rock occur in about equal proportions in layers 10-50 ft thick, mostly 15-30 ft thick. Some to much bedrock and mantle is severely expansive.

Composition: Andesitic to basaltic lava flows, as described for unit 234, interlayered with predominantly very fine grained tuffaceous and diatomaceous sedimentary rock, diatomite, and tuff. Tuffaceous and diatomaceous rock and tuff are almost all (about 90 percent) silt- and clay-size materials that weather to sticky clay; the remaining 10 percent is fine-grained to very coarse grained, well to moderately well sorted, largely clean, clay-free sandstone. Diatomite is white, chalky, very fine grained rock.

Hardness: Flows are hard where fresh, firm to soft containing hard blocks where weathered. Diatomite is firm and brittle where fresh and where moderately weathered, but becomes soft and clayey in places where weathering is extreme (within 3 ft of ground surface) or where much is fractured at very close spacing. Very fine grained diatomaceous and tuffaceous rock and tuff are generally firm where fresh; where weathered, they range from firm to soft, sticky clay. Clean sedimentary rock is soft and friable where weathered and probably where fresh.

Bedding: Distinct flows and sedimentary intervals are interlayered in very thick (largely 15- to 30-ft, ranging from 10- to 50-ft) layers. Bedding within sedimentary intervals is largely thick to very thick, medium in places.

Parting: Present at contacts between flows and sedimentary rock and within sedimentary intervals at some bedding planes, especially at diatomite contacts. Present at close to very close spacing in some (10-30 percent) of flow rock. Present at very close spacing in some sedimentary rock where well weathered within several feet of ground surface.

Fracture: Flow rock is fractured at close to 5-ft spacing, mostly close to wide. Diatomite is fractured at very close to moderate spacing, mostly close to very close. Diatomaceous and tuffaceous rock and tuff are fractured at very close to moderate, mostly close to moderate, spacing where weathered.

Permeability: Flow rock has very low intergranular permeability and low fracture permeability to depth. Intergranular permeability of diatomite low, of silt- and clay-size sedimentary material very low, of clean and well-sorted sedimentary rock moderate to locally high. Thus, an estimated 50 percent of bedrock (flows) has low fracture permeability to depth, 40-45 percent has very low total permeability, and 5-10 percent has moderate to locally high intergranular permeability. Most mantle very low to low.

Weathering: Flows are weathered irregularly, from depths of several feet to more than 20 ft, leaving firm to soft clayey weathered rock contain-

ing variable proportions and sizes of hard blocks. Diatomite is weathered to soft, clayey material to depth of 8 ft in places (where much very close fracture), but in other places it is basically fresh (firm, brittle, no clay) to within 3 ft of ground surface. Very fine grained diatomaceous and tuffaceous rock and tuff generally are weathered to clay to depths of more than 6 ft, but some have little clay at depth of 4 ft. Clean sedimentary rock is weathered to depths of more than 15 ft.

Surficial mantle: Largely clayey.

Expansivity: Much bedrock is unexpansive (flow rock), some to much severely expansive (weathered very fine grained sedimentary rock). Much mantle significantly expansive to unexpansive, some to much severely expansive. Bedrock samples: GE12A, weathered tuffaceous and diatomaceous rock, cracked, free swell 137 percent; GE12B, weathered fine ash tuff or tuffaceous rock, free swell 135 percent; GE13B, popcorn-weathered material (clay), free swell 188 percent. All of the above samples are associated with cracking in roads. Also sample GE14, weathered diatomite (clay), slightly cracked, free swell 85 percent. Surficial mantle samples: GE13A, black clay soil on weathered tuff(?), free swell 118 percent; GE13C, soil on diatomite, free swell 40 percent.

Sources: K.F. Fox, oral commun., 1972-73; Fox and others, 1973; four stations.

MAP UNIT 238

Geologic unit, (age), and location: Ash-flow tuff of the Sonoma Volcanics interlayered with andesitic to basaltic flows (T), in area between Santa Rosa Valley and Howell Mountains.

Summary: Hard andesitic to basaltic lava flows and flow breccia interbedded with firm ash-flow tuff and minor firm to soft tuffaceous sedimentary rock. Hard flows are generally 5-100 ft thick, firm intervals 40 ft to a few hundred feet thick. Minor bedrock and some mantle severely expansive.

Composition: Andesitic to basaltic flow rock identical to unit 234, including fragmental rock, interbedded with ash-flow tuff identical to unit 270 and minor tuffaceous sedimentary rock. Probably much to most of unit is tuff, much is flow rock, minor sedimentary rock.

Hardness: Flow rock is similar to unit 234; that is, mostly hard, becomes firm where weathered. Ash-flow tuff is firm, some soft. Tuffaceous sedimentary rock is firm to soft.

Bedding: Very thick beds of alternating flow rock and tuff; intervals of flow rock are 5-100 ft thick, commonly about 20 ft, whereas tuff intervals are mostly 40-100 ft thick, but may be as thick as a few hundred feet. Beds are clear on aerial photographs, but most exposures are too small to reveal bedding. Some tuffaceous sedimentary rock in tuffaceous intervals has medium to thick beds.

Parting: Probably at bedding planes (very wide spacing) and locally within tuffaceous intervals.

Fracture: Flow rock has mostly moderate spacing, ranging from close to wide. Spacing in ash-flow tuff ranges from moderate to 20 ft, mostly wide to 5 ft. Tuffaceous sedimentary rock generally has indistinct fracture where fresh, close to very close spacing where weathered.

Permeability: Flow rock has very low intergranular permeability, probably low fracture permeability to depth; ash-flow tuff has low intergranular permeability; tuffaceous sedimentary rock has low to moderate and locally high intergranular permeability. Thus, bedrock has largely low permeability to depth, but contains minor zones of moderate and even high permeability parallel to bedding. Probably most mantle low to very low, some to much moderate.

Weathering: Andesitic flows weather as described for unit 234. Tuff and tuffaceous rock have variable weathering; much sedimentary rock and tuff are weathered clayey to depths of more than 6 ft, but some are weathered to clay to depths of more than 20 ft.

Surficial mantle: Probably most clayey, some to much granular.

Expansivity: Most bedrock is unexpansive, minor severely expansive (weathered tuffaceous sedimentary rock). Most mantle unexpansive to significantly expansive, some severely expansive. See samples for units 234 and 270. Samples of weathered tuffaceous sedimentary rock: K9, mildly cracked weathered clayey material, free swell 92 percent; K10A, mildly cracked tuff, free swell 81 percent; K10B, weathered tuffaceous siltstone or tuff, mildly cracked, free swell 71 percent; K12, weathered tuffaceous sandstone, free swell 100 percent.

Sources: K.F. Fox, oral commun., 1972-73; Fox and others, 1973; four stations.

MAP UNIT 239

Geologic unit, (age), and location: Volcanic rocks (T), only at Lone Hill, south of San Jose.

Summary: Not seen in field. Some tuff and tuffaceous shale, some dacite (flinty), and some perlitic dacite, all of these extensively altered (kaolinized and pyritized). Most is hard rock, quarried for road metal.

Expression in aerial photographs: Resistant bump in flat alluvial plane. Largely removed and graded.

Composition: Unit includes: (1) Tuff grading to tuffaceous shale, white, well bedded, looks like shale in Monterey Group (unit 525). (2) Perlitic dacite. (3) Dacite that is massive and flinty, some vesicular. All of these compositions are altered in most places, in large part kaolinized and pyritized.

Unit contains some of each composition. Dacite (composition 3) forms most of Lone Hill. Tuff and tuffaceous shale (composition 1) forms some of Lone Hill and all of isolated exposure immediately south of Lone Hill.

Hardness: Dacite and perlitic dacite are largely hard; quarried for road metal. Tuff and tuffaceous shale firm to hard.

Bedding: In tuff and tuffaceous shale, distinct and probably thin to medium. Absent in remainder (most of unit). Perlitic dacite as thick as 200 ft.

Parting: Present probably at close to moderate spacing in tuff and tuffaceous shale, absent in remainder (most of unit).

Permeability: Intergranular permeability of bedrock probably largely very low, except much shallow rock probably low owing to alteration. Probably low fracture permeability to depth in most bedrock. Probably much to most mantle low to very low.

Surficial mantle: Probably much to most clayey where not removed by grading.

Expansivity: Most bedrock unexpansive, some to much (tuff and tuffaceous shale) may be expansive. Much mantle may be expansive. See samples for unit 260.

Sources: Bailey and Everhart, 1964; Davis and Jennings, 1954.

MAP UNIT 240

Geologic unit, (age), and location: Rhyolitic flows of the Sonoma Volcanics (T), only in Howell Mountains north and east of Calistoga.

Summary: Largely rhyolitic and rhyodacitic flows, in many places hydrothermally altered; includes some tuff, tuff breccia, and agglomerate. Unit is about half firm to soft rock and half hard rock. Hydrothermally altered bedrock may be significantly expansive, and much mantle is significantly expansive.

Composition: Largely rhyolitic to rhyodacitic flow rock similar to unit 218; may be intrusive in part. Contains much hydrothermally altered rhyolite, both hardened silicified rock and soft and clayey bleached and altered rock. Also includes some tuff, lithic tuff, agglomerate, and other lithologies, particularly near Calistoga Grade, north of Calistoga, and at Glass Mountain.

Unit is decidedly less homogeneous and generally softer than unit 218. Softness and lack of homogeneity in most areas is due to hydrothermal alteration, but in other areas it is due to admixture of other materials owing to tectonic movement or landsliding and, also, to inclusion within the map unit of tuff, tuff breccia, and agglomerate.

Hardness: Variable, but probably about half firm to soft rock and half hard rock. In some areas, unit consists wholly of firm to soft rock ow-

ing either to alteration or to admixture of firm lithologies. In contrast, some rock types that would otherwise be firm are locally hard owing to silicification in hydrothermally altered areas. Hydrothermally altered rhyolite has much more firm to soft rock than is typical for rhyolitic flows.

Bedding: Mostly absent, but present and distinct in some interlayered pyroclastic rock at medium to very thick (10 ft or more).

Parting: Present in some flow rock at very close to very wide (4-ft) spacing, as described for flows of unit 218, and in some altered rock at close to very close spacing.

Fracture: Variable, from moderate to very wide spacing, as in typical rhyolitic flow rock, to close to very close spacing in firm to soft altered rock.

Permeability: Most bedrock has very low intergranular permeability and low fracture permeability to depth, but some has moderate to high intergranular permeability (breccia and pyroclastics) and probably some has very low total permeability (some altered rock). Much mantle moderate, much low to very low.

Weathering: Variable, from no visible weathering effect to thorough alteration that extends deeper than cuts. Thorough alteration probably results from hydrothermal activity and so probably extends to depth; it commonly produces clayey material, and so free clay is more abundant in this unit than in unit 218.

Surficial mantle: Much granular, much clayey; typically sandy clay or clayey sand. More clay in soil than unit 218.

Expansivity: Most bedrock is unexpansive, but much may be significantly expansive (altered rock) and some may be severely expansive. Much mantle unexpansive, much significantly expansive, minor to some severely expansive. Samples: CA14A, typical soil on altered rock, free swell 51 percent; CA14B, uncommon soil on altered rock, free swell 72 percent; CA12, red clay soil on tuff, free swell 116 percent; SH17A, clayey colluvium on unaltered rhyolite, free swell 31 percent.

Sources: K.F. Fox, oral commun., 1972-73; Fox and others, 1973; seven stations.

MAP UNIT 241

Geologic unit, (age), and location: Rhyolitic breccia of the Sonoma Volcanics (T), near Napa.

Summary: Largely hard, tough rhyolite breccia that has mostly wide fracture spacing; much is blasted for excavation. Forms bold outcrops. Some weathered rock has firm matrix containing hard blocks as large as 2-3 ft in diameter. Minor interbedded firm lithic tuff. Mantle is unexpansive.

Composition: Breccia of small to large blocks of rhyolite in tight matrix of smaller pieces and, where discernible, banded rhyolitic flow rock. Includes minor interbedded lithic lapilli tuff as described for unit 272.

Hardness: Typically hard, uniformly. Some rock (less than half) has firm or, less commonly, soft matrix between hard blocks where weathered. Lithic tuff is firm to hard.

Bedding: Absent, except where lithic tuff is interbedded.

Parting: Absent.

Fracture: Spacing is mostly wide, but ranges from moderate to very wide (6 ft), in places as much as 10 ft. Where weathered matrix is firm to soft, effective spacing is size of hard blocks, which are medium to large; matrix in this rock has very close fracture spacing on surface where weathered.

Permeability: Very low intergranular permeability in almost all bedrock. Very low to low fracture permeability in shallow bedrock, may extend to depth. Most mantle moderate.

Weathering: Mostly fresh to outcrop. Some matrix is weathered firm to depths of more than 6 ft.

Surficial mantle: Largely granular; typically loam containing abundant rock fragments.

Expansivity: Bedrock and mantle are unexpansive. Sample N5, uncracked loam soil, typical, free swell 35 percent.

Sources: K.F. Fox, oral commun., 1972-73; Fox and others, 1973; two stations.

MAP UNIT 250

Geologic unit, (age), and location: Volcanic rocks (K), near Loma Prieta in Santa Cruz Mountains south of San Jose.

Summary: Briefly seen in field. Basaltic pillow lava, breccia, and tuff breccia; some diabase. Unit is similar in composition, physical properties, permeability, and surficial mantle texture to Franciscan greenstone (unit 253), but it is probably less sheared and disrupted.

Expansivity: Like unit 253. Bedrock is largely unexpansive, but minor to some may be expansive where sheared, altered, or weathered. Much mantle unexpansive, much significantly expansive, probably minor to some severely expansive. Samples: LOG11, mildly cracked red-brown sandy silt soil, typical, free swell 53 percent; LOG12, red sandy silty soil, typical, free swell 50 percent.

Sources: R.J. McLaughlin, oral commun., 1979; two stations.

MAP UNIT 251

Geologic unit, (age), and location: Spilite near Black Point (K), on Sonoma County coast.

Summary: Spilitic basalt, like Franciscan greenstone (unit 253) except much wide and some very wide fracture spacing in fresh rock. Bedding and parting are absent. Fresh rock is hard, weathers firm to hard.

Composition: Spilitic basalt containing widespread but minor replacement by epidote; locally minor chloritic pillow matrix.

Hardness: Fresh rock is hard. Weathered rock is firm to hard, becoming firm to soft where severely weathered.

Bedding: Largely absent or unrecognizable; locally defined by pillows in sequences of unknown thickness. Dikes may be present.

Parting: Absent.

Fracture: Shattered like Franciscan assemblage except at northern end of coastal exposure. Effective fracture spacing is probably largely moderate to wide, close where more shattered and weathered; some has very wide effective spacing in fresh rock. Pillows, 1-5 ft in intermediate diameter, form effective fracture in some rock. Fractures are largely tight in fresh rock and in some weathered rock.

Permeability: Very low intergranular permeability, low to locally moderate fracture permeability largely in shallow bedrock. Mantle probably variable, moderate to very low.

Weathering: Depth of weathering not observed, but probably highly variable, as is degree of weathering. Weathered rock is oxidized along entire fracture system, although this does not affect physical properties much.

Surficial mantle: Probably clayey to granular, much of each, like unit 253.

Expansivity: Probably like unit 253, in which bedrock is largely unexpansive, but minor to some is expansive where sheared, altered, or weathered. Probably much mantle unexpansive, much significantly expansive, minor to some severely expansive.

Stratigraphic thickness: Thousands of feet.

Sources: Blake and others, 1971; Wentworth, 1966; three stations.

MAP UNIT 253 Franciscan greenstone

Geologic units, (age), and location: Greenstone of the Franciscan assemblage (KJ), throughout most of region; quartz keratophyre of the Franciscan assemblage, near Loma Prieta in Santa Cruz Mountains south of San Jose.

Summary: Altered basaltic volcanic rock consisting of pillow lava, tuff breccia, tuff, flows, and related intrusive rock; includes some sheared rock like units 800 and 804. Most fresh rock is hard; quarried for fill and road metal. Low to locally moderate fracture permeability in shallow rock. Bedrock is largely unexpansive; much surficial mantle is expansive.

Composition: Altered basaltic volcanic rock consisting of pillow lava, breccia, tuff breccia, tuff, flows, and related intrusive rock; locally minor chert (like unit 511) or limestone (like unit 909). Pillows, flows, and breccia fragments are glassy to holocrystalline and largely aphanitic; some rock, especially in larger masses, is diabasic (grain size as large as 1 mm). Pillow lava consists of rounded pillow masses 1 ft to several feet in length in a subordinate to generally minor matrix of chlorite or tuff; tuff breccia consists of variably abundant altered basaltic fragments, mostly very small to small, in tuff matrix; tuff is sandstone and siltstone composed of altered mafic glass fragments. Some rock is variably sheared; borders may be altered to clay.

Proportions are variable. Tuff and tuff breccia generally are subordinate but locally they dominate; in Marin County, about 60 percent pillow lava, 30 percent tuff breccia, 10 percent tuff.

Hardness: Where fresh, flows, intrusives, pillows, breccia fragments, and some pillow and breccia matrix are hard; tuff and most pillow and breccia matrix are firm. Weathered rock is largely firm to soft, larger pieces hard; clay is soft.

Bedding: Mostly indistinctly bedded in very thick (commonly tens of feet), irregular beds; oriented pillows define crude bedding in some.

Parting: Absent except in chert (like unit 511) and along shear surfaces in sheared rock.

Fracture: Largely close to moderate spacing; some wide, especially in diabasic rock. Common close to very close spacing of incipient fracture that becomes effective in weathered rock. Pillows 1 ft to several feet in length create effective wide fracture spacing in pillow lava. Variable very close to very wide shear surfaces in some rock.

Permeability: Bedrock has very low intergranular permeability, low to locally moderate fracture permeability largely in shallow rock. Mantle variable, moderate to very low.

Surficial mantle: Clayey to granular, probably much of each. Much soil is on borderline between granular and clayey.

Expansivity: Bedrock is largely unexpansive, minor to some expansive (where sheared, altered, or weathered). Much surficial mantle is unexpansive, much significantly expansive, minor to some severely expansive. Bedrock samples: SM6, altered greenstone, free swell 50 percent; SFN1, altered greenstone, free swell 61 percent; BO9, deeply weathered greenstone, free swell 50 percent; BO12, weathered greenstone, free swell 70 percent; SFS16, sheared greenstone in BART tunnel, free swell 98 percent. Surficial mantle samples: SG24, typical grassland soil on greenstone, free swell 60 percent; BO24A, typical woodland surficial soil on greenstone, free swell 19 percent; BO24B, typical woodland subsoil on greenstone, free swell 30 percent; MH16A, surficial soil on greenstone (Loney topsoil), free swell 120 percent; MH16B, subsoil on greenstone (Loney subsoil), free swell 138 percent; MM4, soil on greenstone, free swell 43 percent; WO15, moderately cracked soil on greenstone, free swell 101 percent; MM5, soil on colluvium from greenstone, free swell 105 percent.

Stratigraphic thickness: Hundreds to thousands of feet.

Sources: Blake and others, 1971, 1974; Bailey and others, 1964; Ellen and others, 1972; Robinson, 1956; many stations.

MAP UNIT 254 Unsheared Franciscan metagreenstone

Geologic unit, (age), and location: Parts of metagreenstone of the Franciscan assemblage (KJ) that have hard topography, as determined by interpretation of aerial photographs, in Marin highlands.

Summary: Slightly metamorphosed greenstone; most is unsheared, but minor to some severely sheared and some variably sheared and shattered rock. Largely hard where fresh and firm to hard where weathered; sheared or shattered rock is firm to soft where weathered. Low to locally moderate fracture permeability. Much surficial mantle is significantly expansive, minor severely expansive.

Composition: Largely nonfoliate, slightly metamorphosed greenstone that shows some development of blue amphiboles; similar in composition to unit 253 except for metamorphism. Unit is largely unsheared, but includes minor to some severely sheared rock (like unit 800) and some variably sheared and shattered rock (like unit 804).

Hardness: Largely hard where fresh; firm to hard pieces in soft to firm matrix where weathered. Sheared or shattered rock is firm to soft where weathered. May be altered to soft material along contacts with other rock types.

Bedding: Mostly unbedded to indistinctly bedded in thick to very thick (tens of feet) irregular beds; oriented pillows define crude bedding in some.

Parting: Largely absent.

Fracture: Where unsheared, spacing is largely close to moderate, some very close; where sheared or shattered, spacing is very close to close. Pillows 1 ft to several feet in length create effective wide fracture in weathered pillow lava. Very close to very wide shear surfaces in some rock.

Permeability: Bedrock has very low intergranular permeability, low to locally moderate fracture permeability largely in shallow rock. Mantle variable, moderate to very low.

Surficial mantle: Clayey to granular, probably much of each.

Expansivity: Bedrock is largely unexpansive, minor to some expansive (sheared rock). Much surficial mantle is unexpansive, much significantly expansive, minor severely expansive. See samples for units 253 and 801.

Stratigraphic thickness: Hundreds to thousands of feet.

Sources: Blake and others, 1974; several stations.

MAP UNIT 255

Geologic units, (age), and location: Basaltic pillow lava and breccia (J), only in Mendocino highlands; diabase and diabase-basalt breccia (J), in northern Mayacmas Mountains.

Summary: Basaltic pillow lava and breccia. Rock is deeply weathered; most is firm, but includes some hard corestones and soft zones of sheared or altered rock. Much to most mantle is significantly expansive.

Composition: Shattered and somewhat sheared basaltic to diabasic pillow lava and breccia; some tuff; rare chert. Rock is composed of greenish-gray basalt altered by albitization and silicification so that original textures are destroyed. In Bradford Mountain area, highly altered dacite porphyry is indistinguishable in the field from basalt (Gealey, 1951).

Hardness: Fresh rock is probably largely hard having hard to firm matrix, but no fresh rock observed. Weathered rock is mostly firm, but some consists of soft zones of more weathered, sheared, or altered rock, and an unknown proportion contains residual corestones of hard rock, which may constitute most of weathered rock in places.

Bedding: Most intervals of pillow lava and breccia are probably tens of feet thick.

Fracture: Effective spacing in fresh rock is probably moderate to wide, ranging from very close to very wide. Effective spacing in weathered rock is very close to moderate, some wide. Most rock is shattered at very close spacing, but in places, particularly in hard corestones, these fractures are tight and do not represent effective fracture spacing. Iron staining is prominent on all fractures.

Permeability: Intergranular permeability of bedrock very low; probably low fracture permeability in shallow rock. Probably much mantle moderate, much low to possibly very low.

Weathering: Weathered deeper than cuts (which are as deep as 30 ft) wherever observed; probably weathered deeply in most places. Corestone (spheroidal) weathering noted in places, absent in others.

Surficial mantle: Clayey to granular, probably much of each. Soil is stony, reddish brown, and thin on ridge crests and slopes.

Expansivity: Bedrock is largely unexpansive, but some may be expansive (where sheared, altered, or weathered). Probably much mantle is unexpansive, much to most is significantly expansive, probably minor to some severely expansive. Samples: GY8, mildly cracked sandy clay soil, free swell 61 percent; GRN1, mildly cracked clayey silt soil, free

swell 50 percent; J1, typical soil on unit Jdb of source map, free swell 60 percent (exaggerated).

Sources: Blake and others, 1971; Gealey, 1951; McLaughlin, 1978; four stations.

MAP UNIT 256

Geologic unit, (age), and location: Basaltic pillow lava and breccia (J), only in Howell Mountains.

Summary: Boldly outcropping, resistant basaltic rock occurring as breccia and pillow lava. Hard blocks in firm matrix, varied fracture spacing. Thin soil, largely unexpansive.

Composition: Basaltic rock, both as breccia of mostly small to medium blocks, but containing blocks as large as 3 ft or more in diameter, and as pillow basalt of elongate pillows mostly 3-6 ft in length. In both breccia and pillow basalt, a fine-grained matrix fills interstices.

Hardness: Breccia has hard blocks in hard matrix where fresh, otherwise hard blocks in firm matrix. Pillow basalt has hard blocks in firm matrix.

Bedding: Breccia has indistinct very thick (as much as 25-ft) beds. Pillow basalt unbedded.

Parting: Absent, but possibly some weakness at very wide spacing (as much as 25 ft) in breccia.

Fracture: Present at different scales, any of which may dominate a given exposure. In breccia, much fracture has close to moderate spacing (size of blocks and closer), but throughgoing fractures are moderate to very wide (5 ft) and major throughgoing fractures 20-30 ft. Pillow basalt has close to very close spacing that is incipient in many places, another set of fractures at moderate spacing, and major throughgoing fractures at wide to 8 ft.

Permeability: Intergranular permeability of bedrock very low; probably low fracture permeability in shallow rock. Mantle variable, moderate to very low.

Weathering: Rock forms bold, craggy outcrops and is hard to the surface of these outcrops. Weathering has little effect except to soften matrix and open incipient fractures.

Surficial mantle: Granular to clayey, probably much of each. Thin, stony soil over boldly outcropping rock.

Expansivity: Bedrock is largely unexpansive, but minor may be expansive. Much to most mantle is unexpansive, probably much significantly expansive. Sample WS7, typical stony clayey soil, free swell 40 percent. See samples for unit 255.

Sources: Sims and others, 1973; two stations.

MAP UNIT 260

Geologic unit, (age), and location: Volcanic rocks (T), only near Blossom Hill (exclusive of Lone Hill), south of San Jose.

Summary: Largely hard welded tuff, rhyolitic to dacitic in composition, forms outcropping blocks and minor bluffs; some to much firm altered tuff or tuffaceous mudstone. Some to much bedrock and most mantle are expansive.

Expression in aerial photographs: Resistant bump.

Composition: (1) Altered welded tuff of lapilli and feldspar crystals in dominant ash matrix; rhyolitic to dacitic in composition (E.E. Brabb, written commun., 1972), dacitic (Bailey and Everhart, 1964). Includes minor tuff breccia that contains blocks as large as 1 ft in diameter. (2) Altered fine ash tuff or tuffaceous mudstone, firm, green; includes minor nodules(?) of hard chert(?). Welded tuff is the prominent and probably dominant constituent, some to much composition 2.

Hardness: Welded tuff is hard to the ground surface where it crops out, but minor weathers firm within 2 ft of ground surface. Green tuff or tuffaceous mudstone is firm where fresh and weathered, but weathered rock mass is soft containing hard nodules.

Bedding: Welded tuff occurs as a very thick (as much as 40-ft) layer that is internally unbedded to indistinctly bedded, but has planar fabric. Very thick (tens of feet) green tuff or tuffaceous mudstone is unbedded internally. Chert nodules are medium and 1-3 ft in length.

Parting: Largely absent, some probably to wide.

Fracture: Welded tuff is fractured both at moderate to wide and at very wide spacing (as much as 10 ft or more) in outcropping blocks, much of each; all has variably prominent close irregular fracture that is insignificant except for durability. Green tuff or tuffaceous mudstone has close to very close spacing of weathering fracture on moderate original spacing.

Permeability: Welded tuff (most of unit) has low to very low intergranular permeability, probably low fracture permeability to depth. Green tuff or tuffaceous mudstone (some to much of unit) has very low intergranular permeability, possibly some low fracture permeability in shallow rock. Most mantle very low to low.

Weathering: Most welded tuff crops out, minor weathers firm within 2 ft of ground surface.

Surficial mantle: Largely clayey, stony.

Expansivity: Most bedrock is unexpansive, but some to much (green tuff or tuffaceous mudstone) is significantly expansive where fresh and probably severely expansive where weathered. Most mantle expansive, much to most severely expansive. Samples: STH12C, fresh green altered tuff, typical of some to much bedrock of unit, free swell 54 percent; STH12A, very mildly cracked stony clay soil, typical on welded tuff, free swell 80 percent; STH12B moderately cracked stony clay mantle, local constituent, free swell 155 percent.

Sources: Bailey and Everhart, 1964; E.E. Brabb, written commun., 1972; one station.

MAP UNIT 261

Geologic unit, (age), and location: Welded tuff of the Sonoma Volcanics (T), in area between Santa Rosa Valley and Howell Mountains.

Summary: Hard welded ash-flow tuff interlayered with firm partially welded or unwelded ash-flow tuff and with minor firm bedded tuff. Most bedrock and mantle is unexpansive.

Composition: Hard welded lithic and pumice lapilli ash-flow tuff interlayered with some to much firm partially welded and unwelded ash-flow tuff similar to unit 270 and with minor firm bedded tuff composed of fine ash, crystals, pumice lapilli, and lithic lapilli. Hard welded tuff probably predominates, but as much as half of unit may consist of unwelded or partially welded tuff. Baked and hardened zones about 3-5 ft thick lie immediately below welded rock.

Hardness: Welded tuff is hard (ringing) both where fresh and weathered. Unwelded tuff, where fresh, is firm; where weathered, it is largely firm, but soft in places within 3 ft of the ground surface.

Bedding: Hard welded tuff occurs in layers generally less than 200 ft thick, between layers of firm tuff. The firm tuff is mostly unbedded or indistinctly bedded, but locally where sorted it is distinctly bedded in thin to thick beds.

Parting: Hard welded rock generally has parting parallel to layering at moderate to very wide (6-ft) spacing; in places, parting is present at close to very close spacing, but this parting is commonly incipient. Firm tuff lacks parting.

Fracture: Much hard welded rock shows columnar jointing perpendicular to layering at moderate to wide spacing; where columnar jointing is absent, the rock is fractured mostly at moderate to wide spacing, but ranges from close to very wide (5 ft), in places as wide as 8 ft. Firm tuff shows variable fracture spacing, mostly moderate to wide.

Permeability: Hard welded tuff (most of unit) has very low intergranular permeability, probably low fracture permeability to depth. Firm tuff (some to much of unit) has low intergranular permeability. Most mantle low to very low, some to much moderate.

Weathering: On hard welded rock, weathering has little effect except production of new fractures and opening of incipient fractures within 2 ft of ground surface; hard rock generally crops out. Effects of weathering on firm tuff are described for unit 270.

Surficial mantle: Largely clayey, some to much granular.

Expansivity: Most bedrock is unexpansive, but minor is severely expansive (weathered bedded tuff) and some is significantly expansive (weathered welded tuff). Most mantle unexpansive, probably some expansive. Samples: DR12, stony clayey soil, typical, free swell 30 percent; DR13, cracked clayey weathered tuff, rare, free swell 84 percent. Also samples reported for unit 270: SH2, typical red clay soil on welded tuff, free swell 41 percent; SH4, clay weathering product of welded tuff, free swell 62 percent.

Sources: K.F. Fox, oral commun., 1972-73; Fox and others, 1973; 11 stations.

MAP UNIT 262

Geologic unit, (age), and location: Xenolithic welded tuff(?) of the Sonoma Volcanics (T), northeast of Napa.

Summary: Hard welded tuff that has moderate to very wide fracture spacing. Forms rugged outcrops and required blasting at both exposures examined.

Composition: Welded lapilli tuff and tuff breccia that contain pebble-size xenoliths (fragments of nonvolcanic rock derived from depth).

Hardness: Uniformly hard.

Bedding: Absent.

Parting: Absent.

Fracture: Moderate to very wide (4-ft) spacing.

Permeability: Bedrock has very low intergranular permeability, low fracture permeability probably to depth. Probably much mantle moderate, much low to very low.

Weathering: Crops out, fresh to ground surface.

Surficial mantle: Granular to clayey, probably much of each; much thin to absent.

Expansivity: Bedrock is largely unexpansive; mantle probably is largely unexpansive.

Sources: K.F. Fox, oral commun., 1972-73; Fox and others, 1973; two stations.

MAP UNIT 270

Geologic unit, (age), and location: Ash-flow tuff of the Sonoma Volcanics (T), in area between Santa Rosa Valley and Howell Mountains.

Summary: Largely firm, coherent, low density ash-flow tuff that is widely fractured and has low permeability, but contains scattered to locally abundant hard welded layers. Also contains less abundant tuff breccia, which consists of hard blocks and bombs in firm tuff matrix, and minor soft to firm tuffaceous sedimentary rock and nontuffaceous clastic sedimentary rock. Minor bedrock and some mantle are severely expansive.

Expression in aerial photographs: Prominent layers of greater and lesser resistance 20-150 ft in width.

Composition: Ash-flow tuff is typically composed of pumice lapilli and minor lithic lapilli embedded in coarse to fine ash matrix. Unit locally includes welded tuff, tuff breccia, lithic tuff, tuffaceous sedimentary rock, fine ash tuff, and nontuffaceous clastic sedimentary rock similar to that mapped as unit 141. Hard welded tuff and firm partially welded tuff occur within unwelded ash-flow sequences. Tuff breccia is composed of 5-50 percent volcanic blocks and bombs or, less commonly, pumice blocks, in tuff matrix; blocks and bombs generally are less than 1 ft in diameter, but may be as large as 3 ft and rarely even 5-10 ft in diameter. Tuffaceous sedimentary rock consists of water-laid sand- to silt-size material, mostly medium- to fine-grained sandstone and siltstone, that is composed of reworked pumice, lithic clasts, and ash admixed with other terrigenous materials in variable proportions; locally it grades to, or interfingers with, nontuffaceous sedimentary rock as described for unit 141.

Unit consists largely of ash-flow tuff; some welded tuff; minor tuff breccia and sedimentary rock. In places, hard welded tuff makes up as much as 50 percent of unit, but generally much less.

Hardness: Ash-flow tuff is firm, coherent rock that contains some soft zones, especially where weathered along fractures; in many places, exposed surfaces are case hardened to firm or hard. Welded tuff is hard; partially welded tuff is firm, but firmer than typical ash-flow tuff. Tuff breccia has hard to firm blocks and bombs in firm matrix. Fine-grained tuffaceous sedimentary rock is mostly firm; medium-grained and coarser sedimentary rock is mostly soft and friable. Nontuffaceous clastic sedimentary rock is soft to firm.

Bedding: Ash-flow tuff occurs in indistinct beds that are 5-150 ft or more thick. Partially welded and welded tuff occurs within beds in medium to 40-ft zones, typically grading both upward and downward to unwelded ash-flow tuff. Tuff breccia is unbedded or indistinctly bedded and occurs in intervals as thick as 50 ft or more. Tuffaceous sedimentary rock is distinctly to indistinctly bedded in medium to very thick beds. Clastic sedimentary rock is distinctly bedded in generally thick beds, ranging from medium to 15 ft. On aerial photographs, this unit commonly shows prominent layers of greater and lesser resistance 20-150 ft in width.

Parting: Mostly absent except in welded or partially welded zones, where it occurs at moderate to wide or very wide (4-ft) spacing. Also present in some fine ash tuff at close spacing, and in sedimentary rock along some bedding planes. Probably present at spacing of 20-150 ft, as judged by scale of folding observed on aerial photographs.

Fracture: In ash-flow tuff, fracture spacing ranges from moderate to about 20 ft; most exposures show predominantly moderate or wide to about 4 ft, and some show largely 5-20 ft. Some fractures are open and accentuated by weathering, others are lined by hard minerals. In ash-flow tuff, weathering typically produces scaling roughly parallel to the weathered surface at close to very close spacing and, in places, produces close weathering fracture within a few feet of the ground surface. Most welded tuff is fractured at moderate to wide spacing, much at wide to 5-ft spacing, but in places spacing is close to moderate and in other places as wide as 8 ft. Tuff breccia generally has only occasional fracture, but moderate to wide spacing is present in places; some larger blocks within tuff breccia are internally fractured at close to moderate spacing. Tuffaceous sedimentary rock generally shows indistinct fracture, but fine-grained and very fine grained tuffaceous sedimentary rock is fractured at close spacing. Partly nontuffaceous sedimentary rock generally shows fracture at close to moderate or wide spacing in rock of medium and finer sand size, but fracture is absent in coarser grained rock.

Permeability: Ash-flow tuff has largely low intergranular permeability; moderate to high permeability generally is restricted to medium to thick zones within low permeability rock. Welded tuff has very low intergranular permeability and probably low fracture permeability to depth. Intergranular permeability of tuff breccia ranges from very low to moderate and locally high, depending on tightness of matrix, but is mostly low; fine-grained tuffaceous sedimentary rock is mostly low to very low, but coarse sandstone and pebble conglomerate may be moderate or high, depending on clay clogging. Intergranular permeability of nontuffaceous sedimentary rock ranges from very low to moderate and high. In summary, most bedrock has low total permeability; minor to some moderate and high permeability occur both as restricted zones within tuff and more commonly as permeable horizons within sedimentary rock. Much mantle moderate, much low to very low.

Weathering: Ash-flow tuff in many places is fresh to within a foot or so of the ground surface, but at most places it is weathered soft to depth of 4 ft; in places, weathering has produced soft clayey material along fractures to depths of more than 15 ft. Welded tuff is commonly unweathered to outcrop of hard, fresh rock, but locally weathers spheroidally to

more than 8 ft deep, producing firm or soft weathered material surrounding hard blocks that persist to the ground surface. Tuff breccia that is somewhat permeable (much of tuff breccia) weathers deeply (more than 15 ft) producing free clay, but tuff breccia that has tight matrix weathers to only about 3 ft deep. Tuffaceous sedimentary rock generally weathers more deeply than ash-flow tuff, commonly to depths of more than 6 ft, some to 10 ft or more, but tight tuffaceous sedimentary rock weathers shallowly similar to ash-flow tuff. Nontuffaceous sedimentary rock weathers deeply (more than 25 ft) where permeable, but impermeable fine-grained beds may weather to depth of only 3 ft.

Surficial mantle: Much granular, much clayey.

Expansivity: Most bedrock is unexpansive, but minor is severely expansive (weathered tuffaceous sedimentary rock). Much mantle is unexpansive, much significantly expansive, some severely expansive. Bedrock samples: SH4, mildly cracked clay weathering product of welded tuff, free swell 62 percent: MWS14, well-cracked clayey weathered tuff, free swell 128 percent. Surficial mantle samples: GE6, uncracked clayey soil, typical, free swell 91 percent; SH2, uncracked red clay soil on welded tuff, typical, free swell 41 percent; K14, uncracked clayey soil, typical, free swell 49 percent; MG9, clayey glass sand soil, typical, free swell 38 percent; MWS13, clayey dark cracked soil on tuffaceous sandstone, free swell 89 percent.

Sources: K.F. Fox, oral commun., 1972-73; Fox and others, 1973; Kunkel and Upson, 1960; Sarna-Wojcicki, 1971, 1976; 33 stations.

MAP UNIT 271

Geologic unit, (age), and location: Clear Lake Volcanics (equivalent to the volcanic rocks of Clear Lake area of Fox and others, 1973), tuff member (Q), near northern boundary of region northeast of Howell Mountains.

Summary: Briefly seen in field. Firm lapilli tuff, mainly at base of olivine basalt flows (unit 212). Bedrock has low intergranular permeability, probably moderate to wide fracture spacing. Other properties of bedrock and mantle are probably similar to ash-flow tuff of unit 270.

Sources: Fox and others, 1973; one station.

MAP UNIT 272

Geologic unit, (age), and location: Lithic tuff of the Sonoma Volcanics (T), in area between Santa Rosa Valley and Howell Mountains.

Summary: Largely firm, tough, lithic and pumice lapilli tuff that contains scattered hard lithic bombs and blocks, grading to tuff breccia; minor zones of agglomerate and volcanic breccia that contain abundant hard blocks. Includes beds and zones of hard tuff and tuff breccia that constitute as much as half of unit locally. Most rock is difficult or impossible to rip, some is easily ripped. Most bedrock and mantle are unexpansive.

Composition: Largely poorly sorted lithic and pumice lapilli tuff containing lithic blocks and bombs that are mostly less than 6 in. in diameter, but as large as 4 ft. Blocks and bombs are commonly absent or scattered and constitute less than 5 percent of the rock, but some of unit is tuff breccia that contains 5-50 percent blocks and bombs, and perhaps 10 percent is agglomerate and volcanic breccia that consist predominantly of bombs and blocks in subordinate tuff matrix. Tuff, as well as tuff matrix of the tuff breccia, agglomerate, and volcanic breccia, is composed of lapilli of rock, pumice, and crystals in matrix of coarse and fine ash. Unit also includes minor beds of fine ash tuff, coarse ash tuff, and sorted tuffaceous sedimentary rock; also local welded tuff (like unit 261) and andesitic intrusive rock (like unit 202). Some areas are hydrothermally altered.

Hardness: Includes firm and hard rock, all tough; rock is dominantly firm, but much firm rock approaches hard, both where fresh and weathered. Lithic blocks and bombs are generally hard, but as much as half are firm where weathered. Thus, the rock is firm to hard and contains some hard blocks. Hydrothermally altered areas in which rock hardness is anomalous and irregularly distributed occur east of Napa and on the southeast side of Mount St. Helena. East of Napa, irregularly distributed firm approaching hard rock may exist to near the ground surface beside altered rock that is firm approaching soft to depths of more than 10 ft, and hard rock is absent. On southeast side of Mount St. Helena, planar silicified zones that are hard where fresh and weathered, generally as wide as 20 ft and locally as wide as 50 ft(?), are interspersed with altered rock that weathers firm to soft.

Bedding: Mostly absent to indistinct at medium to very thick. Locally, distinct thin to very thick beds are revealed by differential weathering of beds of contrasting hardness or where tuffaceous sedimentary rock is sorted.

Parting: Absent.

Fracture: Variable. Many exposures show random moderate to wide fracture spacing, but spacing in crags and cliffs is wide to very wide (as much as 10-20 ft) and uniformly perpendicular to bedding. In many places there is a less well developed fracture at moderate spacing. In all exposures, weathering produces irregular close to very close spalling of exposed rock. Many hard blocks have moderate fracture spacing. Welded layers show moderate to wide columnar jointing and very wide noncolumnar fracture.

Permeability: Bedrock has uniformly low intergranular permeability. No pores are visible using lens, but deep weathering (alteration?) suggests some permeability. Most mantle moderate to high, some low to very low.

Weathering: Variable. Much rock on southeastern slopes of Mount St. Helena and east of Napa is hydrothermally altered to depths greater than cuts (deeper than 12 ft). Southeast of State Highway 29 and east of The Palisades, unit is not hydrothermally altered in outcrop. In some places within 2-3 ft of the ground surface, rock is soft and free clay is present, but nearby firm rock may persist to the ground surface. On exposed faces, rock weathers by spalling on close to very close irregular fractures, producing a granular, highly permeable colluvium.

Surficial mantle: Largely granular, some clayey. Most is permeable silty soil containing free clay and rock fragments as large as 4 ft in diameter. Local sticky clay. Highly permeable colluvium on steep slopes.

Expansivity: Most bedrock is unexpansive, some may be expansive (particularly altered rock). Most mantle is unexpansive, some to much probably significantly expansive, minor severely expansive. Samples: DR7, clayey sand soil, typical for Mount St. Helena, free swell 31 percent; N3, minor cracked clayey soil, free swell 100 percent. Most soil is not cracked but granular and silty, containing rock fragments.

Sources: K.F. Fox, oral commun., 1972-73; Fox and others, 1973; 18 stations.

MAP UNIT 273

Geologic unit, (age), and location: Agglomerate of the Sonoma Volcanics (T), in area between Santa Rosa Valley and Howell Mountains.

Summary: Largely firm, some hard, tough rock, similar to unit 272 except for prominent bedding and markedly greater abundance of blocks and bombs. Blocks and bombs are hard and range from scattered to locally abundant (as much as 50-60 percent of rock). Unit is mostly distinctly bedded in thin to medium beds, some thick, but lacks parallel parting; has wide to very wide (as much as 20-ft) fracture spacing; has low to possibly moderate intergranular permeability; and is shallowly weathered, producing little free clay. Much craggy outcrop; forms The Palisades east of Calistoga. Almost all bedrock and most mantle are unexpansive.

Composition: Interlayered and intergrading tuff breccia, tuff, agglomerate, and volcanic breccia, all of which consist of lithic and pumice lapilli tuff containing blocks and bombs. Blocks and bombs generally are less than 1 ft in diameter, but are as large as 2 ft, and rarely as large as 6 ft,

in diameter. Agglomerate and volcanic breccia, which consist of dominant bombs and blocks in subordinate matrix, make up about 10-30 percent of unit; tuff breccia, which consists of 5-50 percent blocks and bombs in tuff matrix, makes up 30-50 percent of unit; and tuff, which contains scattered blocks and bombs, makes up most of the remainder of unit. Unit also includes minor pumiceous ash-flow tuff similar to unit 270, andesitic to dacitic flow rock, and rare (less than 2 percent) well-sorted tuffaceous sedimentary rock of coarse sand to fine gravel size.

Hardness: Firm, approaching hard; perhaps 20-30 percent is truly hard rock. Firm rock is commonly case hardened. Rock is tough. Blocks and bombs are hard.

Bedding: Distinct beds, largely thin to medium, some thick, and some very thick unbedded intervals (as much as 20 ft or more). Thin- to thick-bedded intervals are crudely sorted into fine-grained, resistant beds and coarser grained, less resistant beds that weather to prominently stratified exposures. Beds are warped under blocks and bombs.

Parting: Absent.

Fracture: Mostly wide to 10-ft spacing of major fractures, but spacing ranges from moderate to 20 ft. These fractures are generally parallel and perpendicular to bedding where exposed in The Palisades. Many of these fractures are cemented by a hard material, but in many places rock within about 3 in. on both sides of fractures is weathered soft or firm. Where spacing of major fractures is wide to very wide, a moderate to close incipient fracture is developed in many places. Some blocks are internally fractured, but some blocks as large as 2 ft in diameter remain unfractured.

Permeability: Most bedrock has low intergranular permeability, but as much as half of the thinly interbedded majority of unit possibly has moderate intergranular permeability along bedding. Well-sorted tuffaceous sedimentary rock (minor) has low to moderate intergranular permeability. Most mantle moderate to high, probably minor to some low to very low.

Weathering: Unit generally crops out or is covered by thin (less than 1-ft) soil. Weathering of bare rock produces close to very close irregular fractures that result in gravel-sized granular weathering debris, which accumulates to form highly permeable colluvium. Where soil cover is present, weathering softens rock to about 3 in. deep, both down from the ground surface and in from fractures and, where original fractures are at moderate spacing, produces spheroidal weathering. Little free clay produced.

Surficial mantle: Largely granular, probably minor to some clayey. Much lacks soil. Soil is thin (mostly less than 1 ft).

Expansivity: Almost all bedrock is unexpansive. Most mantle is unexpansive, probably some to much significantly expansive. Sample DR27, typical clayey silt soil, free swell 45 percent. No evidence of expansivity in bedrock or mantle; little free clay.

Sources: K.F. Fox, oral commun., 1972-73; Fox and others, 1973; five stations.

MAP UNIT 274

Geologic unit, (age), and location: Andesite(?) (T), immediately east of Sunol Valley, southwest of Livermore Valley.

Summary: Not seen in field. Only information is from Hall (1958), who described unit as "reddish-brown basaltic agglomerate 300 ft? thick."

Expression in aerial photographs: Smooth, soft topography that has rounded intermediate crests and resistant knobs. Small area of exposure.

Composition and physical properties: Probably similar to fragmental rock of units 230 and 234.

Permeability: Bedrock probably has low intergranular permeability. Probably most mantle low to very low.

Surficial mantle: Probably largely clayey, like units 230 and 234.

Expansivity: Bedrock probably is largely unexpansive. Probably most mantle expansive, some to much severely expansive. Inferred from units 230 and 234.

Source: Hall, 1958.

MAP UNIT 275

Geologic unit, (age), and location: Tuff and volcanic gravel (Q), derived largely from rhyolitic intrusive rocks of the Sonoma Volcanics, in area between Santa Rosa and Petaluma Valleys and Napa Range.

Summary: About 70 percent is breccia of hard, angular rhyolitic blocks in firm to soft matrix of tuff or indistinctly bedded tuffaceous sedimentary rock. Remainder of unit is firm to soft tuff, tuffaceous sedimentary rock, sandstone, and conglomerate. Unit is characterized by scattered large blocks of rhyolite on ground surface. Most mantle is unexpansive; minor to some bedrock (weathered tuff) is severely expansive.

Composition: About 70 percent is breccia or rubble of hard, angular blocks of rhyolite in variably abundant matrix of tuff or tuffaceous material that is variably tight to granular and permeable. Most blocks of rhyolite are small to medium in size, but many are as large as 4 ft in diameter, some as large as 10 ft, and fractured masses of rhyolite are as large as 25 ft in diameter. Many blocks remain on the ground surface as a lag deposit. The remaining 30 percent of unit includes: (1) Tuff and tuff breccia. (2) Tuffaceous sedimentary rock that is sand-sized and poorly to moderately well sorted. (3) Interbedded partly tuffaceous sandstone and conglomerate, poorly to moderately sorted, clayey but not entirely clay saturated; conglomerate contains cobbles as large as 6 in. in diameter.

Hardness: Where weathered, breccia has hard blocks in firm to soft matrix and a few beds are resistant enough to crop out. Tuff and tuff breccia are firm where fresh, weathering firm or soft, and contain hard blocks. Tuffaceous sedimentary rock is firm to soft where weathered. Sandstone and conglomerate are soft and friable, but conglomerate contains hard clasts.

Bedding: Distinct 10- to 50-ft intervals of the principal compositions, such as breccia, tuff, or conglomerate. In places, breccia deposits are indistinctly bedded in thick to very thick beds of breccia between thin to medium beds of sorted tuffaceous sedimentary rock. Some very thick (6-ft) beds within breccia are firm enough to crop out and form hogbacks. Sandstone and conglomerate are interbedded in thick to very thick (more than 6-ft) distinct beds.

Parting: Absent.

Fracture: Present in firm breccia at close to wide spacing, mostly moderate; absent in breccia that has soft matrix. Tuff and tuff breccia are fractured at moderate spacing. Tuffaceous sedimentary rock and sandstone are unfractured to fractured at moderate to wide spacing. Conglomerate unfractured.

Permeability: Breccia (most of unit) has generally low intergranular permeability, locally moderate or high, depending on matrix. Intergranular permeability of tuff and tuff breccia low; of tuffaceous sedimentary rock, sandstone, and conglomerate mostly low, moderate in places. Probably much moderate intergranular permeability in sedimentary rock below weathering zone. Thus, permeability of most bedrock low, some moderate to locally high. Probably much mantle moderate, much low to very low.

Weathering: Breccia has fresh blocks in matrix that is weathered to depths of more than 12 ft. Tuff and tuff breccia are weathered to depths of more than 6 ft; tuffaceous sedimentary rock probably to depth of 10 ft; sandstone and conglomerate to depths of more than 12 ft.

Surficial mantle: Granular to clayey, probably much of each. Porous in places, clayey and tight in other places.

Expansivity: Most bedrock is unexpansive, but minor to some severely expansive (weathered tuff). Most mantle unexpansive, probably some severely expansive. Samples: SP4, typical soil, free swell 39 percent; SR4A stony clay soil, typical, free swell 28 percent; SR4B, weathered tuff, cracked, free swell 89 percent.

Sources: K.F. Fox, oral commun., 1972-73; Fox and others, 1973; two stations.

MAP UNIT 280

Geologic unit, (age), and location: Cache Formation (QT), near Lake Berryessa, west of Yolo Range.

Summary: Largely tuff and pumicite, tight and clay clogged to highly permeable, largely firm where weathered. May contain interbedded siltstone and claystone. Severely expansive clay soil.

Composition: Largely pumice lapilli tuff and coarse-grained tuffaceous sedimentary rock (pumicite). Tuff is tight to highly porous (pores as large as 0.1 in. in diameter); scattered blocks of basalt or andesite as much as 6 in. in diameter on ground surface of unit suggest minor scattered blocks in tuff. Pumicite consists largely of pumice clasts of coarse sand to fine gravel size, coated by clay that saturates much of the rock where weathered. Unit may include some to much interbedded siltstone and claystone; we did not observe siltstone and claystone, but infer the possibility of their presence from description of upper Cache Formation by Brice (1953).

Hardness: Firm to soft, largely firm, where weathered.

Bedding: No bedding observed, but material must be bedded because different materials are present. Indistinct crossbedding in some exposures.

Parting: Largely absent; possibly present at bedding planes.

Fracture: Where observed, wide to 4-ft original spacing and superimposed moderate spacing (weathering fracture?).

Permeability: Variable intergranular permeability in bedrock: tuff very low to moderate; pumicite very low to high; siltstone and claystone, if present, low to very low. Thus, intergranular permeability of shallow bedrock is probably largely low to very low, but some shallow rock and much bedrock below shallow rock has large pores and moderate to high intergranular permeability. Probably most mantle very low.

Weathering: Where observed, all of exposure is weathered. Much clay clogging of pores in weathered zone.

Surficial mantle: Largely clayey. Typically sandy clay soil, well cracked; contains glass and crystal fragments.

Expansivity: Most bedrock is unexpansive, but much may be expansive where weathered. Probably most mantle severely expansive. Sample WS8, typical sandy clay soil, well cracked, free swell 102 percent.

Sources: Anderson, 1936; Brice, 1953; Fox and others, 1973; Rymer, 1981; one station.

MAP UNIT 281

Geologic unit, (age), and location: Lawlor Tuff (T), in the monocline north of Mount Diablo.

Summary: About one-fourth to one-third of unit is firm tuff in very thick beds that form cavernous outcrops; remainder is firm tuffaceous sedimentary rock that is poorly exposed, including some clayey rock and some sandstone and lenses of conglomerate. Minor basalt locally. Most mantle is severely expansive.

Expression in aerial photographs: Includes one or two light-toned, variably resistant bands 30-100 ft in width and dark-toned intervals between bands as wide as 70 ft. Not clearly expressed in much of area.

Composition: (1) Pumice lapilli tuff, andesitic in composition (Vitt, 1936), composed almost entirely of pumice lapilli that range from less than 0.25 in. to 1.5 in. in diameter, mostly pea-sized; contains occasional lithic fragments as large as 0.25 in. in diameter. Between these grains are voids filled to partly filled by clay in weathered zone. (2) Pumiceous lithic vitric tuff consisting of 10-30 percent pumice lapilli and 2-10 percent lithic lapilli in matrix of 95 percent glass fragments; large clasts are not sorted. (3) Pumice-bearing clayey sand sedimentary rock, in which pumice constitutes minor to as much as half of the rock. (4) Pumice-bearing sandy clay sedimentary rock. (5) Conglomerate lenses in tuffaceous sedimentary rock; clasts are as large as 2 in. in diameter. (6) Medium- to coarse-grained clean sandstone, similar to sandstone of unit 352, and minor siltstone, conglomerate, and tuffaceous components. (7) Basalt, some vesicular (Clark, 1912). (8) Local basal conglomerate of subangular basaltic boulders 2-3 ft in diameter.

One-fourth to one-third of unit is tuff, of which much is composition 1, much composition 2. Remaining two-thirds to three-fourths of unit is tuffaceous sedimentary rock, of which much is sandy (compositions 3, 6) and much clayey (composition 4). Minor local basalt and basal conglomerate. Minor to locally some conglomerate lenses (composition 5) within tuffaceous sedimentary rock.

Hardness: Tuff is firm, cohesive, and brittle; sedimentary rock largely firm, some weathers soft; minor basalt hard to firm; clasts in conglomerate hard.

Bedding: Tuff occurs largely in very thick (10- to 60-ft) beds, within some of which indistinct bedding at medium to 4 ft and some parting at wide to 4 ft is present. Sedimentary rock varies from distinct thick to 4-ft beds to very thick (as much as 50-ft or more) beds. Basalt flow thick to 4 ft. See sections by Vitt (1936) and Sarna-Wojcicki (1976).

Parting: Difficult to evaluate. Mostly absent within tuff beds, but some wide to 4-ft spacing. Present on tuff contacts. Variable within sedimentary rock, from largely absent to largely present at wide to 4-ft spacing.

Fracture: Tuff is fractured at wide to 15-ft spacing, most wide to 5 ft; some close to moderate scaling where weathered. Sedimentary rock variable, moderate to 5-ft spacing; clayey rock has very close to moderate spacing of weathering fracture superimposed.

Permeability: Pumice lapilli tuff (composition 1) has probably moderate, some low, intergranular permeability where weathered (clay clogged); probably high where fresh. Vitric tuff (composition 2) has low intergranular permeability where fresh and weathered. Sandy sedimentary rock has some of both low and moderate intergranular permeability; clayey sedimentary rock low. Thus, bedrock has much of both moderate and low intergranular permeability; minor to some high, especially below shallow rock. Most mantle very low, some to much moderate.

Weathering: All is weathered to depths greater than 20 ft.

Surficial mantle: Largely clayey, some to much granular. Observations of clay soil and loam soil.

Expansivity: Probably most bedrock is unexpansive, but much may be expansive where weathered. Most mantle severely expansive. Samples: AS1, typical dark clay soil, moderately cracked, free swell 130 percent; CL23, dark sandy clay soil, probably typical, free swell 130 percent.

Stratigraphic thickness: 50-100 ft (Brabb and others, 1971); 50-100 ft (Society of Economic Paleontologists and Mineralogists, Pacific Section, 1950); 130-195 ft (Vitt, 1936); 170 ft (Sarna-Wojcicki, 1976); 150 ft (Clark, 1912).

Sources: Brabb and others, 1971; Clark, 1912; Davis and Vernon, 1951; Davis and Goldman, 1958; Sarna-Wojcicki, 1971, 1976; Society of Economic Paleontologists and Mineralogists, Pacific Section, 1950; Vitt, 1936; J.R. Wagner, written commun., 1973; Wagner, 1978; five stations.

MAP UNIT 282

Geologic unit, (age), and location: Pinole Tuff (T), near San Pablo Bay at north end of the East Bay Hills.

Summary: Much is firm, tough, coherent rock, variably bedded in thin to very thick (more than 15-ft) beds; much is firm to soft(?) tuffaceous sedimentary rock. Much very wide fracture spacing. Probably most mantle is severely expansive.

Composition: Includes pumiceous tuff and tuffaceous sedimentary rock in varying proportions, from mostly tuff to mostly tuffaceous rock; minor tuff breccia. See sections by Vitt (1936) and Sarna-Wojcicki (1976) for proportions in different areas. The tuff is classified as an augite, hypersthene, andesitic vitric tuff (Vitt, 1936); it is composed almost entirely of pumice, as ash and as fragments as large as 8 in. in diameter, although most consists of pumice lapilli in ash matrix. Crystal fragments nowhere exceed 5 percent of the rock, and lithic fragments are

rare also. Tuffaceous sandstone (fine to coarse grained), shale, and conglomerate constitute some to most of unit and are poorly exposed. They consist of various proportions of tuffaceous and nontuffaceous materials; most are dominantly tuffaceous. Unit includes one 16-ft bed of tuff breccia that consists of blocks and bombs of pumice, andesite, basalt, and rhyolite in matrix of pumiceous ash; blocks and bombs are generally less than 3 in. in diameter but as large as 3 ft in diameter.

Hardness: Mostly firm; fine ash tuff is brittle. All exposed rock is coherent and tough, but tuffaceous sedimentary rock is probably firm to soft (inferred from Vitt, 1936). Pebbles in conglomerate are hard to firm.

Bedding: Distinct to indistinct thin to very thick (more than 15-ft) beds, mostly thick to 10 ft. Many beds are internally bedded, but most very thick beds show no internal structure. Lawson (1914) reported that most of unit is distinctly bedded and water sorted.

Parting: Present on some bedding planes, absent on others. In many places, spacing is very wide (about 20 ft).

Fracture: Spacing ranges from moderate to very wide (15 ft), depending on composition and bed thickness (wider in thicker beds). Much has moderate to 6-ft spacing, but spacing greater than 6 ft is common. Rare beds produce closely spaced weathering fracture.

Permeability: Bedrock has largely low intergranular permeability; minor to possibly some moderate intergranular permeability in shallow rock, probably some moderate below shallow rock. Probably most mantle very low.

Weathering: Exposed rock is firm to ground surface and shows no apparent weathering effect.

Surficial mantle: Probably largely clayey.

Expansivity: Probably most bedrock is unexpansive, but much may be expansive where weathered. Probably most mantle severely expansive. Sample R2, dark clay soil, well cracked, typical, free swell 102 percent.

Stratigraphic thickness: 900 ft at type locality near Rodeo (Vitt, 1936), varying to less than 50 ft near Pinole.

Sources: Lawson, 1914; Sarna-Wojcicki, 1971, 1976; Vitt 1936; five stations.

MAP UNIT 283

Geologic unit, (age), and location: Contra Costa Group, basal tuff (T), near Lafayette in the East Bay Hills.

Summary: Briefly seen in field. Unit is 60-350 ft thick of which 60 ft is andesitic vitric tuff, the remainder largely sandy tuffaceous sedimentary rock. Much to most mantle is severely expansive. Unit is reported to be resistant and underlie ridges.

Composition: Tuff proper (about 60 ft thick) is andesitic vitric tuff similar to the Pinole Tuff (unit 282) and consists of pumice lapilli as much as 0.75 in. in diameter in matrix of pumiceous ash. Pumiceous glass constitutes 95-98 percent of the rock; lithic fragments as large as 0.5 in. in diameter constitute as much as 5 percent. Upper parts of tuff are cemented by calcite and grade upward to pure white limestone. Included in unit are sandy tuff beds below the tuff proper, local porphyritic basalt and sandstone interbedded with the tuff proper, and probably tuffaceous sandstone above the tuff proper, grading into unit 130.

Hardness: Tuff is firm, tough, and coherent; limestone and basalt hard; tuffaceous sandstone and sandy tuff probably firm.

Bedding: Tuff is distinctly bedded in beds that average 4-5 ft thick. Limestone bed is 3-5 ft thick. Unknown in materials above and below tuff.

Parting: Unknown. Probably not present on all bedding planes in tuff, but at least on some. Unknown in materials above and below tuff.

Fracture: Probably wide to very wide (6 ft) in tuff.

Permeability: Bedrock probably has largely low intergranular permeability, possibly some moderate. Probably most mantle low to very low.

Surficial mantle: Probably largely clayey.

Expansivity: Probably most bedrock is unexpansive, but much may be expansive where weathered. Much to most mantle severely expansive. Sample WC62, typical gray silty clay soil, well cracked, free swell 90 percent.

Sources: Ham, 1952; Vitt, 1936; one station.

MAP UNIT 284

Geologic unit, (age), and location: Orinda Formation, tuff member (T), in area north of Livermore Valley.

Summary: See description for unit 134.

MAP UNIT 285

Geologic unit, (age), and location: Kirker Formation of Primmer (1964), tuff member (T), in the monocline north of Mount Diablo.

Summary: Consists of tuff, tuffaceous sandstone, and tuffaceous mudstone in variable proportions. Possibly some moderate permeability in sandstone. Most mantle is severely expansive.

Expression in aerial photographs: In many places, nonresistant to intermediate in resistance; in other places forms knobs. In a few places, forms knobs along white band 75-100 ft in width.

Composition: (1) Tuff of fine-grained, some medium-grained, clasts wholly or largely of glass; well sorted in sense of no anomalously large clasts, but enough silt-size material to have low permeability. Tuffaceous material is largely reworked (Primmer, 1964). (2) Tuffaceous sandstone, fine to medium grained, some coarse grained (Primmer, 1964), composed of lesser arkosic terrigenous clasts mixed with dominant tuffaceous components; most has sufficient fines to produce low permeability, but Primmer (1964) reported arenite as well as wacke. (3) Tuffaceous fine and very fine sandy mudstone grading to muddy fine-grained to very fine grained sandstone, probably Primmer's (1964) argillaceous fine tuff; weathers spheroidally. (4) Fissile fine tuff or tuffaceous shale.

In section exposed on Kirker Pass Road, 20 percent is tuff (composition 1), 30 percent tuffaceous sandstone (composition 2), 50 percent tuffaceous mudstone (composition 3), minor composition 4. Primmer's (1964) sections show great variability along strike, as well as a similar combination of lithologies, including fine to medium tuff, fine argillaceous tuff (probably our mudstone), and tuffaceous sandstone. His columns suggest substantial variation in proportions; for example, a section about 1 mile from Kirker Pass Road shows about two-thirds tuff, one-tenth tuffaceous sandstone, and less than one-third tuffaceous mudstone.

Hardness: Tuff is firm and brittle; tuffaceous sandstone and mudstone are firm where fresh and weathered.

Bedding: Beds or intervals of the three major compositions are distinct and very thick, generally ranging from 10 ft to tens of feet. Internal lamination within tuff beds results in wide to 4-ft parting. In places, thick to 4-ft beds of tuffaceous sandstone occur within tuff (Primmer, 1964). Probably indistinct bedding and crossbedding within tuffaceous sandstone (Clark, 1918).

Parting: Present at very wide spacing on distinct bedding planes and at wide to 4-ft spacing within tuff on laminations. Probably largely absent in mudstone.

Fracture: Tuff and tuffaceous sandstone have moderate to wide, some close, original spacing and close to very close spacing of weathering fracture in form of scaling, parting on lamination, or checking (that is, normal weathering fracture). Tuffaceous sandy mudstone has close, some moderate, spacing on which very closely spaced spheroidal weathering fracture is superimposed.

Permeability: Tuff and tuffaceous sandstone have largely low intergranular permeability, but possibly some moderate, especially below shallow rock; tuffaceous mudstone largely very low, but some low, especially where fresh. Thus, bedrock has some to much of both low and very low intergranular permeability, but probably minor to some moderate, especially below shallow rock. Most mantle very low.

Weathering: Tuff and mudstone are dark (fresh) within 10 ft of ground surface. Spheroidal weathering in mudstone; much flaking and weathering fracture in tuff and tuffaceous sandstone.

Surficial mantle: Largely clayey, uniform.

Expansivity: Bedrock probably is largely unexpansive, but much may be expansive where weathered. Most mantle severely expansive. Sample CL20, mildly to moderately cracked dark sandy clay soil, typical, free swell 112 percent.

Stratigraphic thickness: As much as 150 ft (Primmer, 1964); 100 ft (Brabb and others, 1971).

Sources: Brabb and others, 1971; Clark, 1918; Primmer, 1964; Society of Economic Paleontologists and Mineralogists, 1950; two stations.

MAP UNIT 290

Geologic unit, (age), and location: Sonoma Volcanics, undivided (T), in area from Sonoma Mountains to east of Vallejo.

Summary: Briefly seen in field. Volcanic rock, most of which is probably andesitic flows, rhyolitic flows, and ash-flow tuff like units 234, 218, and 270, respectively, but may include other compositions of the Sonoma Volcanics (like units 219, 220, 235, 237, 241, 261, 262, 272, and 273). Along State Highway 21 between Cordelia and Benicia, unit includes much of both ash-flow tuff (like unit 270) and andesitic flows (like unit 234). Surficial mantle variable.

Expansivity: Almost all bedrock unexpansive, but some may be severely expansive. Probably much mantle unexpansive, much significantly expansive, some severely expansive.

Permeability: Variable.

MAP UNIT 291

Geologic unit, (age), and location: Volcanic rocks (T) (equivalent to Quien Sabe Volcanics of Leith, 1949), near Pacheco Peak in Diablo Range, near southern boundary of region.

Summary: Not seen in field. Consists of intrusive volcanic rock and of extrusive volcanic rock interbedded with agglomerate and water-deposited sedimentary rock. Volcanic rock is probably hard except for matrix of agglomerate, which is firm or soft. Gentler slopes are covered by adobe soil that is probably severely expansive.

Composition: All information from Leith (1949). Unit consists of intrusive rock and of extrusive rock interbedded with agglomerate and water-deposited sedimentary rock. Intrusive rock consists of andesite and rhyolite; extrusive rock consists of andesite, basalt (much olivine basalt), and dacite. Agglomerate is composed of rock fragments in glassy, honeycombed matrix; the coarser rock fragments are largely 1-3 in. in diameter, but some are as large as 3 ft in diameter. Sedimentary rock has crude stratification.

Hardness: Where fresh, intrusive and extrusive volcanic rock is probably hard; agglomerate contains hard to firm rock fragments in firm or soft matrix.

Bedding: Extrusive rock is interbedded with agglomerate and sedimentary rock. Bedding is indistinct in sedimentary rock.

Fracture: Jointing occurs parallel to contacts in intrusive rock.

Permeability: Most bedrock probably has very low intergranular permeability and largely low, some moderate, fracture permeability to depth. Mantle probably largely very low to low, much(?) moderate on steeper slopes.

Weathering: Glassy matrix of agglomerate weathers more deeply than its rock fragments or other volcanic rock.

Surficial mantle: Probably largely clayey, much granular on steeper slopes. Dense adobe soil underlies gentle slopes; steeper slopes have little soil development.

Expansivity: Bedrock is probably largely unexpansive. Much mantle is probably severely expansive.

Stratigraphic thickness: As much as 4,000 ft (Leith, 1949).

Source: Leith, 1949.

MAP UNIT 300

Geologic unit, (age), and location: Fluvial and lacustrine deposits of Little Sulphur Creek (T), in Mayacmas Mountains near Cloverdale.

Summary: Not seen in field. Largely conglomerate, but contains interbedded sandstone lenses in lower half and sequences of siltstone and silty mudstone rhythmically interbedded with silty sandstone that constitute 50 percent of upper half of unit. Hard calcite-cemented beds make up some of the sandstone and conglomerate. Some mantle probably expansive.

Expression in aerial photographs: Very bold resistant bluffs as high as 200 ft or more, unique to the area. Very widely jointed.

Composition: Lower half—Well-rounded to subangular, well-worked pebble to cobble conglomerate, moderately sorted, including a very coarse breccia (blocks as large as 15 ft or more in diameter) locally at base. Clasts are mostly Franciscan detritus; matrix is fairly clean wacke sandstone. Interbedded lenses of coarse wacke sandstone make up 10-50 percent of this part of unit. Calcite-cemented beds (hard) constitute as much as 20 percent of sandstone and conglomerate.

Upper half—Conglomerate similar to lower part, but as much as 50 percent of section is thinner interbeds of siltstone and silty mudstone that are rhythmically interbedded with silty sandstone. Mudstone and siltstone have graded beds and crossbedding, nonmarine fossils, and carbonized plant remains.

Hardness: Sandstone and conglomerate matrix are firm to hard, clasts largely hard; calcite-cemented beds ringing hard; mudstone and siltstone firm.

Bedding: Conglomerate in very thick (6- to 25-ft) beds that have vague internal bedding including lineation of pebbles. Minor medium-bedded lenses of coarse wacke are interbedded with conglomerate in sequences as thick as 100 ft. Very thin internal beds and crossbeds in mudstone and siltstone. Rhythmic interbedding in much of upper half.

Parting: Absent in conglomerate. Probably present in much of upper half at spacing to wide (in rhythmically bedded rock and in much mudstone).

Fracture: Very wide spacing (more than 6 ft) in conglomerate and possibly in sandstone. Mudstone and siltstone probably moderate to close spacing. Blocks in breccia as large as 15 ft or more in diameter.

Permeability: Intergranular permeability of sandstone and conglomerate probably largely low, some to possibly much moderate; very low to low in siltstone, mudstone, and calcite-cemented sandstone and conglomerate. Probably low fracture permeability in shallow rock. Thus, intergranular permeability in bedrock is largely low, some to possibly much moderate, some very low. Most mantle moderate, some very low to low.

Weathering: Much mudstone probably develops good weathering parting, as rock fragments are elongate. Weathers in more resistant fashion than Novato Conglomerate (unit 603) but matrix is softer.

Surficial mantle: Largely granular, some clayey. Thin granular soils on conglomerate and sandstone; thicker, landslide-prone, clayey soils on mudstone.

Expansivity: Most bedrock unexpansive, but some (mudstone) may be expansive where weathered. Some mantle probably expansive.

Stratigraphic thickness: 500-2,000 ft.

Sources: R.J. McLaughlin and M.C. Blake, Jr., oral commun., 1974; McLaughlin, 1978; McNitt, 1968.

MAP UNIT 301

Geologic unit, (age), and location: Briones Sandstone, conglomerate in G member of Wagner (1978) (T), in the East Bay Hills.

Summary: Not seen in field. Largely hard cemented conglomerate. Stony sandy soils.

Composition: Conglomerate of hard, well-rounded pebbles and cobbles as much as 3 in. in diameter of chert, quartz, and volcanic rock in unknown matrix that is largely cemented by carbonate.

Hardness: Clasts hard, matrix hard to possibly firm.

Parting: Unknown, probably absent.
Permeability: Intergranular permeability of bedrock probably variable, very low to moderate; low fracture permeability in shallow rock. Most mantle moderate.
Surficial mantle: Largely granular, stony.
Expansivity: Bedrock and almost all mantle unexpansive.
Source: Ham, 1952.

MAP UNIT 302

Geologic unit, (age), and location: Monterey Group, basal conglomerate (T), in the East Bay Hills near Alamo.
Summary: Not seen in field. Probably equally abundant conglomerate and coarse-grained sandstone, minor siliceous shale toward top. Bedrock and mantle largely unexpansive. According to Ham (1952), forms narrow strike ridge, thus resistant unit.
Composition: Probably equally abundant conglomerate and sandstone, minor siliceous shale near top. Conglomerate consists of largely hard, some firm, clasts, probably pebbles and cobbles, in matrix of probably coarse-grained, poorly sorted sand. Sandstone is coarse grained, poorly sorted, and moderately cemented, probably by calcite.
Hardness: Clasts in conglomerate largely hard, some firm. Matrix of conglomerate probably firm, possibly some hard. Sandstone largely firm, possibly some hard. Siliceous shale consists of firm to hard pieces.
Bedding: Conglomerate in distinct lenticular beds as thick as 15 ft; sandstone crossbedded; siliceous shale in very thin to medium beds.
Parting: Largely absent. Present near top of unit on siliceous shale-sandstone contacts.
Fracture: Unknown, probably moderate to wide spacing in sandstone.
Permeability: Probably low to moderate, some possibly high, intergranular permeability in bedrock. Mantle largely moderate.
Surficial mantle: Probably largely granular, stony.
Expansivity: Bedrock and mantle largely unexpansive.
Stratigraphic thickness: 100-140 ft (Ham, 1952); appears to be 250 ft on our map.
Source: Ham, 1952.

MAP UNIT 303

Geologic unit, (age), and location: Conglomerate at Point Reyes (T).
Summary: Largely conglomerate having matrix of poorly sorted silty sandstone. Conglomerate is hard where fresh, firm where weathered. Largely very thick beds and moderate to wide, but as much as very wide, fracture spacing. Almost all bedrock and mantle is unexpansive.
Composition: Largely conglomerate of rounded pebbles, cobbles, and boulders of quartzite, granitic rock, and porphyritic volcanic rock, in a matrix of finer conglomerate and poorly sorted silty sandstone. Most clasts are less than 6 in. in diameter, but conglomerate includes angular blocks of granitic rock as large as 7 ft or more in diameter. Unit includes some (about 20 percent) sandstone and shale interbeds. Near base in most of area of exposure is 50-60 ft of dark sandy shale (not seen in field), which includes several layers of calcareous concretionary material. Unit overlies granitic rock of unit 906.
Hardness: In fresh exposure, conglomerate is hard and sandstone is hard to firm; in weathered exposure, conglomerate is firm, sandstone is firm to soft and friable, and shale is soft. Most clasts in conglomerate are hard, but blocks of granitic rock are firm.
Bedding: Very thick (generally more than 10-ft) beds of conglomerate distinctly and irregularly interbedded with sandstone and with intervals of sandstone and shale as thick as 20 ft. Sandstone beds within these intervals are medium to thick; shale beds are thin to medium.
Parting: Present in shale at very close spacing and at shale contacts. Possibly present on some sandstone contacts with conglomerate or adjacent sandstone, but most of these contacts are gradational and lack potential for parting.
Fracture: In conglomerate and sandstone, spacing ranges from moderate to very wide (about 10 ft), mostly moderate to wide, and in at least some places is about perpendicular to bedding. Most clasts are fractured. Rock breaks around clasts in places, through clasts in other places.
Permeability: Intergranular permeability in bedrock largely low owing to silt and very fine sand matrix that fills interstices, possibly some moderate. Mantle moderate.
Weathering: Weathered to depth of about 15 ft. Little or no free clay.
Surficial mantle: Granular. Dark sand-silt soil, no cohesion, thin (1-2 ft).
Expansivity: Almost all bedrock and mantle unexpansive.
Stratigraphic thickness: At least 300 ft at its thickest, thinning away from lighthouse.
Sources: J.A. Bartow, written commun., 1972; Blake and others, 1974; Galloway, 1977; two stations.

MAP UNIT 310

Geologic units, (age), and location: Purisima Formation, San Gregorio Sandstone Member (T); Santa Margarita Sandstone (T); in Santa Cruz Mountains.
Summary: Sandstone, variably sorted, containing concretions as large as 1 ft in diameter. Almost all bedrock and most surficial mantle is unexpansive, some mantle is significantly expansive (clayey subsoil).
Composition: Very fine grained to coarse-grained sandstone, variably sorted; Santa Margarita Sandstone, in particular, is clean. Carbonate concretions as large as 1 ft in diameter.
Hardness: Firm to soft and friable where weathered, probably firm where fresh; concretions hard.
Bedding: Absent to indistinct very thick beds.
Parting: Absent.
Fracture: Spacing uncertain, most is probably very wide.
Permeability: Very low to high intergranular permeability in bedrock, depending on presence of cement and on grain size and sorting; probably much moderate, especially in Santa Margarita Sandstone. Low fracture permeability in shallow bedrock. Surficial mantle largely moderate, some low to very low where clayey subsoil present.
Surficial mantle: Largely granular, some clayey subsoil.
Expansivity: Almost all bedrock unexpansive. Most mantle unexpansive, some significantly expansive (clayey subsoil). Bedrock samples: FP2A, sandstone, free swell 45 percent; SGG8A, sandstone, free swell 49 percent. Surficial mantle samples: FP2B, soil, free swell 51 percent; SGG8B, moderately cracked clayey soil, free swell 62 percent.
Stratigraphic thickness: 150-450 ft.
Source: Ellen and others, 1972.

MAP UNIT 311

Geologic unit, (age), and location: Sandstone (T), on Point Reyes peninsula.
Summary: Massive clean to silty sandstone, soft to firm where weathered. Probably consists of sand from Laird Sandstone (unit 313) intruded into overlying rock, and so composition, many physical properties, permeability, expansivity, and surficial mantle texture are probably similar to those of unit 313. See description for unit 313.
Composition: Sandstone, probably largely fine to medium grained, clean to silty. Petroliferous in many places; shows hydrocarbons on joint surfaces.
Hardness: Where weathered, soft to firm and friable.
Bedding: Absent.
Parting: Probably none.
Sources: J.A. Bartow, written commun., 1972; Blake and others, 1974; one station.

MAP UNIT 312

Geologic unit, (age), and location: Sandstone (T), only near Gilroy in Santa Clara Valley area.

Summary: Almost entirely sandstone, moderate to high permeability, largely firm, but minor hard calcite-cemented rock and some quite firm partially cemented rock. Wide fracture spacing. Unexpansive sandy soil.

Expression in aerial photographs: Less resistant than unit 525. Intermediate topography, somewhat rounded, having smooth ribs and slopes. No tonal banding, homogeneous.

Composition: (1) Sandstone, coarse to medium grained, well to moderately sorted (McLaughlin and others, 1971), containing minor calcite-cemented rock and some partially cemented (quite firm) rock. (2) Siliceous shale, minor (E.E. Brabb, written commun., 1972). Unit is almost all sandstone, minor cemented and hard, some partially cemented and quite firm (tough ripping).

Hardness: Largely firm to soft where weathered, some quite firm where weathered. Fresh rock is largely firm, hard where cemented.

Bedding: Where observed, sandstone is unbedded in exposures 40 ft and more in width, except for thick to 5-ft zone of calcite cementation. Some indistinctly bedded (McLaughlin and others, 1971).

Parting: Absent.

Fracture: Moderate to very wide (4-ft) spacing, largely wide, in firm sandstone; spacing wide to 4 ft in hard cemented sandstone.

Permeability: Intergranular permeability in sandstone moderate to high (at least some high), except low to very low where cemented; thus, largely moderate to high in bedrock. Almost all mantle moderate.

Weathering: Sandstone weathered to buff color to depths of 20 ft or more. Upper 5-10 ft is weathered soft, at least in places.

Surficial mantle: Granular.

Expansivity: Almost all bedrock and surficial mantle is unexpansive.

Sources: E.E. Brabb, written commun., 1972; McLaughlin and others, 1971; two stations.

MAP UNIT 313

Geologic unit, (age), and location: Laird Sandstone (T), on Point Reyes peninsula.

Summary: Largely clean to silty clayless sandstone, some conglomerate at base, minor calcite-cemented beds, and minor shale interbeds near contact with unit 522. Largely moderate intergranular permeability, varies from high to low. Firm to hard where fresh, firm to soft where weathered except for hard calcite-cemented beds. Almost all bedrock and most mantle are unexpansive.

Composition: Largely clean to silty clayless sandstone, poorly to moderately well sorted; ranges from fine to very coarse grained, probably averages medium grained. Includes conglomerate of hard rounded boulders and firm to hard medium granitic blocks in sandstone matrix at base. Locally calcite-cemented, medium to very thick (20-ft) beds. Much sandstone is micaceous, and all appears derived from granitic rock of unit 906. Minor shale interbeds locally near contact with unit 522.

Hardness: Firm to hard where fresh, firm to soft and friable where weathered, except for hard calcite-cemented sandstone present locally. Interbedded shale is soft.

Bedding: Mostly absent. In places, very thick (20-ft) beds of sandstone between thick shale interbeds; in other places, some sandstone is in very thin to medium beds.

Parting: Mostly absent. Present only where shale interbeds or where sandstone is distinctly bedded.

Fracture: In fresh and most weathered rock, fracture spacing is mostly moderate to wide, ranging from close to 20 ft. Within several feet of the ground surface, new fractures develop in most places at close to moderate spacing. Fractures are generally closed, filled by crushed sand or iron stain, and are open only within several feet of the ground surface. Much fracture is indistinct.

Permeability: Intergranular permeability in bedrock ranges from high to low, mostly moderate, depending on silt content and grain size. Definitely a permeable unit that has some high permeability. Mantle largely moderate.

Weathering: To depth of 40-50 ft.

Surficial mantle: Largely granular.

Expansivity: Almost all bedrock unexpansive. Most mantle unexpansive but some is significantly expansive. Samples DB31, soil, free swell 52 percent; DB32, organic soil, free swell 47 percent.

Stratigraphic thickness: Variable, generally 100-150 ft. Conglomerate at base varies from 1-2 ft to as much as 20 ft.

Sources: Anderson, 1899; J.A. Bartow, written commun., 1972; Blake and others, 1974; Galloway, 1977; Weaver, 1949; seven stations.

MAP UNITS 314, 439, 466, 467

Geologic units, (age), and location: Nortonville Shale (T): undivided (unit 439), only in area between Vallejo and Yolo Range, excluding Potrero Hills; upper shale unit (unit 466); middle sandstone unit (unit 314); lower shale unit (unit 467). Units 314, 466, and 467 occur at southern end of Yolo Range near Vacaville.

Summary: Units 466 and 467 are fissile shale, firm pieces, soft rock mass; almost all bedrock and mantle is severely expansive. Unit 314 is largely sandstone of moderate intergranular permeability, mostly soft to firm and friable where weathered, but contains hard concretions as much as 7 ft in length; this unit is a prominent ridge former to the south. Unit 439 is generally largely shale similar to units 466 and 467, but between Vacaville and Travis Air Force Base exposures are sandstone similar to unit 314.

Composition: Units 466 and 467 are fissile shale but contain minor siltstone, minor thin sandstone beds, and rare thin to medium bentonite beds. Unit 314 is largely sandstone, but contains minor interbedded shale similar to unit 466. Sandstone is mostly fine grained, some medium to coarse grained, well to moderately well sorted, clean to silty (in places more than 15 percent silt); calcite cemented at least in part where fresh, concretions where weathered.

Hardness: Shale of units 466 and 467 has firm pieces, soft rock mass, both where fresh and weathered. Sandstone of unit 314 is soft to firm where weathered, but contains hard calcite-cemented concretions; where fresh, sandstone is hard, at least in part, owing to calcite cement, remainder probably firm.

Bedding: Units 466 and 467 are laminated and contain minor distinct thin beds of sandstone and thin to medium beds of bentonite (rare). Unit 314 is distinctly bedded in places, having sandstone in medium to 4-ft beds between very thin to medium beds of shale; in other places, sandstone occurs in very thick (20- to 40-ft and more) beds that have indistinct internal medium to 10-ft beds.

Parting: In units 466 and 467, at very close spacing, some close spacing in siltstone. In unit 314, at bedding planes where distinctly bedded, moderate to 4-ft spacing, and within shale interlayers at very close spacing; absent in very thick beds.

Fracture: In shale of units 466 and 467, close to very close spacing across fissility where weathered. In sandstone of unit 314, fracture at moderate to 10-ft spacing, mostly moderate to 4 ft; unfractured concretions range from large to 7 ft in length by 4 ft thick.

Permeability: Units 466 and 467 have very low total permeability in both bedrock and mantle. Bedrock of unit 314 has largely moderate intergranular permeability, some possibly high, but very low in calcite-cemented zones and beds (abundant at depth?); mantle largely moderate, some very low. Unit 439 has largely very low intergranular permeability, some to much moderate and possibly high, in bedrock; largely very low, some to much moderate, in mantle.

Weathering: Both shale and sandstone weathered to depth of 20 ft (buff to gray color change).

Surficial mantle: Almost all clayey in units 466 and 467. Largely granular, some clayey, in unit 314. Largely clayey, some to much granular, in unit 439.

Expansivity: In units 466 and 467, almost all bedrock and mantle is severely expansive. In unit 314, most bedrock and mantle are unexpansive, but minor bedrock and some mantle is severely expansive, and much mantle may be significantly expansive. In unit 439, most bedrock and mantle is severely expansive but some to much of each is unexpansive. Bedrock samples: MV17A, weathered claystone of unit 466, free swell 172 percent; MV17C, weathered shale of unit 467, free swell 127 percent; A1A, bentonite bed 3-4 in. thick in unit 466, free swell 120 percent; A1C, clayey shale from unit 466, moderately cracked, free swell 87 percent. Surficial mantle samples: MV17B, soil on unit 466, free swell 150 percent; A1B, sandy clay soil on unit 466, free swell 70 percent.

Sources: Bailey, 1930; Bartow, 1985; Sims and others, 1973; Tolman, 1943; two stations.

MAP UNIT 315

Geologic unit, (age), and location: Unnamed formation, upper sandstone member (T), near southern end of Yolo Range.

Summary: Nearly uniformly firm, medium- to fine-grained clean quartz sandstone, unbedded; minor mudstone. Contains scattered hard concretions as much as 12 ft in length. Moderate, approaching high, permeability. Thin sand soil.

Composition: Medium- to fine-grained quartz sandstone, well sorted, containing minor silt; minor fine-grained silty sandstone. Scattered calcite-cemented concretions as much as 12 ft in length. Near contact with unit 473, minor interbedded fissile mudstone.

Hardness: Largely firm, approaching soft. Concretions are hard.

Bedding: Mostly absent, locally indistinctly crossbedded. Minor thin-bedded silty sandstone (observed in one place). Near upper contact with unit 473, very thin to thin beds of fissile mudstone are interbedded with very thin to medium beds of sandstone.

Parting: Largely absent.

Fracture: Largely very wide spacing (5 ft to tens of feet). Some highly weathered rock has moderate spacing, and some highly weathered rock has moderate to wide sheeting parallel to the ground surface. Concretions are unfractured.

Permeability: Moderate, approaching high, intergranular permeability in bedrock. Moderate in mantle.

Weathering: To depths greater than 30 ft.

Surficial mantle: Granular. Thin sand soil.

Expansivity: Almost all bedrock and mantle is unexpansive.

Sources: Sims and others, 1973; two stations.

MAP UNIT 320

Geologic unit, (age), and location: Cierbo Sandstone (T), only in the East Bay Hills.

Summary: Almost entirely sandstone; some contains clay coatings approaching saturation, some is clean. Much to most mantle is severely expansive. Moderately resistant unit.

Composition: Almost all is sandstone, well to moderately well sorted, mostly medium grained, but some fine grained and minor coarse grained. Sandstone contains less than 10 percent silt; some is clay free, but most medium-grained sandstone contains clay coatings and grades toward clay saturation. Clay content suggests tuffaceous components. Includes minor fossiliferous shell horizons, clay-saturated sandstone, thin-bedded sandstone, and medium to thick elongate (as long as 10 ft) calcite-cemented concretions.

Hardness: Weathered sandstone is firm to soft. Fine-grained sandstone is quite firm. Fossiliferous horizons are largely hard, some firm. Clay-saturated sandstone is firm.

Bedding: Absent to indistinct in very thick (40-ft and thicker) beds. Almost entirely sandstone, containing only occasional fossiliferous sandstone medium to 4 ft in thickness, clay-saturated sandstone very thick (as much as 15 ft), and thick sequences of thin to very thin beds of sandstone separated by very thin partings.

Parting: Almost entirely absent. Present only in rare very thin bedded to thin-bedded sandstone interbeds.

Fracture: Indistinct and variable, largely because rock is soft. Probably mostly moderate to wide spacing, ranging from close to 10 ft. Much of unit develops sheeting parallel to ground surface; spacing is mostly moderate, ranging from close to wide, in upper 15 ft and very wide (about 6 ft) to depth of 30 ft. In hard fossiliferous rock, wide to 4-ft fracture spacing.

Permeability: Sandstone (almost all of unit) has low to moderate intergranular permeability, depending on extent of clay coatings; in shallow rock largely low but some moderate, below shallow rock probably largely moderate. Clay-saturated sandstone very low; thin-bedded sandstone low. Most mantle very low to low.

Weathering: To depths greater than 35 ft.

Surficial mantle: Largely clayey, typically dark sandy clay soil.

Expansivity: Bedrock largely unexpansive, but some may be expansive where weathered. Much to most mantle severely expansive. Samples: MI9, moderately cracked sandy clay soil, free swell 90 percent; MI20, well-cracked sandy clay soil, typical, free swell 114 percent.

Stratigraphic thickness: 775 ft (Sheehan, 1956), 800 ft (J.R. Wagner, written commun., 1973).

Sources: Sheehan, 1956; J.R. Wagner, written commun., 1973; Wagner, 1978; four stations.

MAP UNIT 321

Geologic unit, (age), and location: Temblor(?) Sandstone (T), only in Diablo Range southeast of San Jose.

Summary: Sandstone, much calcite cemented and hard, bedded thin to very thick, some spheroidal weathering leaving corestones. Clayey sand mantle is unexpansive to significantly expansive.

Expression in aerial photographs: Mostly hard topography having slightly rounded crests. Tonal bands 10-30 ft in width in a few places (may be in unit 524). Topographic resistance similar to unit 641.

Composition: Sandstone, mostly medium grained and moderately well sorted; minor is coarse and very coarse grained and contains scattered pebbles. Much sandstone is calcite cemented, the remainder is clay saturated. About equal amounts of clayey sandstone and calcite-cemented sandstone.

Hardness: Calcite-cemented sandstone hard where fresh, firm where weathered; clayey sandstone firm to quite firm where fresh, firm where weathered.

Bedding: About one-third of unit has distinct interbedding of calcite-cemented and clayey sandstones, consisting of thin to thick beds of calcite-cemented rock between medium to thick beds of clayey rock. Another one-third is probably very thick beds of calcite-cemented rock, and the remaining one-third is probably clayey sandstone of at best indistinct bedding.

Parting: Present on distinct bedding at close to wide in about one-third of unit, but this parting occurs along irregular, lumpy surfaces, and so is effective for ripping but not for cut-slope failure. Remainder of unit essentially unparted.

Fracture: In distinctly bedded one-third of unit, hard beds fractured at close to wide spacing, mostly moderate. In very thick bedded calcite-cemented one-third of unit, wide to 4-ft original fracture spacing produces irregular close pieces by spheroidal weathering. No fracture observed in firm clayey rock.

Permeability: Low to very low intergranular permeability in fresh calcite-cemented sandstone; low in fresh and weathered clayey sandstone; low to moderate in weathered calcite-cemented sandstone. Thus, low to

very low intergranular permeability in fresh bedrock at depth, low to possibly moderate fracture permeability in shallow fresh rock, and low to moderate intergranular permeability in shallow weathered bedrock. Most mantle moderate.

Weathering: Very thick bedded calcite-cemented sandstone weathers spheroidally to hard fresh cores surrounded by firm weathered rock to depths greater than 15 ft. Similar weathering depth for distinctly bedded sandstone.

Surficial mantle: Largely granular. Uniform clayey sand soil.

Expansivity: Bedrock unexpansive. Mantle unexpansive to significantly expansive. Sample MSZ13, typical uncracked clayey sand soil, free swell 52 percent.

Stratigraphic thickness: Variable thickness, from 0 to less than 1,000 ft (Gilbert, 1943).

Sources: Gilbert, 1943; one station.

MAP UNIT 322

Geologic unit, (age), and location: Temblor(?) Sandstone (T), only in Santa Cruz Mountains near Mount Umunhum.

Summary: Largely firm clayey sandstone, some hard calcite-cemented sandstone, rare limestone and conglomerate. Bedrock and almost all mantle are unexpansive.

Expression in aerial photographs: Fairly resistant, forms Jacques Ridge. Intermediate to hard topography, sharp to flat crest, regularly ribbed.

Composition: Sandstone, but contains rare clayey and organic (shelly) limestone, as well as conglomerate at and near base. Sandstone makes up almost all of unit and is of two types: (1) clean, well-sorted, coarse- to medium-grained, calcite-cemented sandstone that crops out; and (2) clay-saturated to nearly clay-saturated, tuffaceous, medium- to coarse-grained, well-sorted sandstone in which milky to amber-colored mobilized tuffaceous clayey material fills to nearly fills pores. Conglomerate typically consists of pebbles, but rarely boulders as large as 3 ft in diameter. Where observed, 20-40 percent of unit is hard calcite-cemented sandstone, 60-80 percent is firm clayey sandstone, and 2 percent is limestone and conglomerate.

Hardness: Calcite-cemented sandstone is hard; clayey sandstone firm, friable; limestone hard; clasts in conglomerate hard. Thus, 20-40 percent hard rock, 60-80 percent firm.

Bedding: Distinct calcite-cemented beds are interbedded with clayey sandstone in upper part of section where observed. Calcite-cemented beds, medium to very thick (8 ft) in sequences as thick as 20 ft, occur between medium to very thick (as much as 15-ft, generally as much as 10-ft) beds of clayey sandstone. Limestone to very thick (6 ft or more). Conglomerate in sandstone to very thick (8 ft). In much of lower part of section, bedding may be largely indistinct and similar in thickness to distinct beds.

Parting: In parts of section, at distinct bedding planes, mostly wide to very wide spacing (as much as 10 ft), but some at moderate spacing. Mostly absent in other parts.

Fracture: In hard calcite-cemented rock at spacing about equal to bed thickness, as wide as 5 ft in beds as thick as 6-8 ft. Fracture in firm clayey sandstone not observed, probably close to wide spacing, mostly moderate. Fracture in limestone similar to bed thickness.

Permeability: Intergranular permeability in tuffaceous sandstone is low where weathered, low to possibly moderate where fresh; in calcite-cemented sandstone, very low where fresh, moderate to high where weathered (essentially a loose sand), shallow cemented rock has low fracture permeability. Thus, most bedrock at depth has low intergranular permeability, possibly some moderate, some very low; shallow bedrock largely low, possibly some moderate to high. Almost all mantle moderate to high.

Weathering: Variable. Hard sandstone crops out essentially fresh, firm sandstone probably weathered to depths greater than 15 ft.

Surficial mantle: Almost all granular, typically slightly clayey sand. Locally, over hard sandstone, mantle may lack clay.

Expansivity: Bedrock unexpansive. Almost all mantle unexpansive, some possibly significantly expansive. Sample STH3, clayey sand mantle, typical, free swell 51 percent (probably exaggerated).

Stratigraphic thickness: About 700 ft exposed where observed at sample locality STH3; 2,150 ft (Bailey and Everhart, 1964).

Sources: Bailey and Everhart, 1964; McLaughlin and others, 1971; one station.

MAP UNIT 323

Geologic units, (age), and location: Lompico Sandstone (T); and Butano Sandstone (T), only near Butano Ridge; in Santa Cruz Mountains.

Summary: Sandstone and minor mudstone and shale, but intervals of clayey rock as thick as 200 ft. Minor significantly expansive bedrock and surficial mantle.

Composition: Sandstone and less than 10 percent mudstone and shale. Sandstone is very fine to very coarse grained, some thicker beds are carbonate cemented; local conglomerate of pebbles, cobbles, and boulders as much as a few feet in diameter.

Hardness: Sandstone is firm to hard where fresh, hard where cemented, firm to soft and friable where weathered; conglomerate clasts hard; clayey rock firm to soft.

Bedding: Medium to very thick (30 ft), distinct to locally indistinct. Clayey rock occurs in sequences locally as thick as 200 ft.

Parting: Moderate to very wide (30-ft) spacing in most.

Fracture: Moderate to very wide spacing, locally close; in weathered clayey rock close to very close spacing.

Permeability: Intergranular permeability of sandstone (most of unit) is low to locally moderate(?), of cemented sandstone and clayey rock very low. Low fracture permeability in shallow clayey bedrock and cemented rock. Almost all surficial mantle moderate, minor low.

Surficial mantle: Almost all granular, minor clayey subsoil.

Expansivity: Almost all bedrock and most mantle unexpansive, minor bedrock and some mantle significantly expansive. Samples: FP3A, sandstone(?), free swell 49 percent; LH4, mudstone, free swell 54 percent; FP3B, organic soil, free swell 58 percent (probably exaggerated).

Stratigraphic thickness: 500 ft near Half Moon Bay (Lompico Sandstone); 9,000 ft at Butano Ridge (Butano Sandstone).

Source: Ellen and others, 1972.

MAP UNIT 330

Geologic unit, (age), and location: Briones Sandstone, E member of Wagner (1978) (T), only in the East Bay Hills, excluding area near Sunol Valley and Pleasanton.

Summary: Most resistant unit in area, forms crests of Rocky Ridge and Las Trampas Ridge. Largely firm sandstone but contains minor to some hard calcite-cemented shell-breccia sandstone in very thick (as much as 10-ft) beds. Almost all bedrock and most to almost all mantle is unexpansive.

Composition: Largely sandstone, medium to coarse grained, poorly to well sorted, interstices filled to nearly filled by silt and clay; minor to some hard calcite-cemented pebbly shell-breccia sandstone composed of abundant shells and shell debris in poorly to well-sorted, medium- to coarse-grained pebbly sandstone. May contain some clean, "well washed" sandstone (Newton, 1948).

Hardness: Shell-breccia sandstone is hard where fresh and weathered; sandstone between shell-breccia beds firm where weathered, probably firm where fresh.

Bedding: Shell-breccia sandstone occurs in very thick (as much as 10-ft), distinct, outcropping beds; on Rocky Ridge, as many as three of these beds. Within shell-breccia beds, indistinct medium to thick beds revealed by weathering. Firm sandstone in very thick (30- to 40-ft) unbedded intervals between shell-breccia beds.

Parting: Probably present at contacts of shell-breccia sandstone at very wide (10-40 ft).

Fracture: In shell-breccia sandstone, spacing is mostly wide, ranging from moderate to very wide (4 ft). Firm sandstone has close to moderate spacing of weathering fracture; some flakes where weathered.

Permeability: Most bedrock has low intergranular permeability owing to clay and silt and to calcite cement; some very low, probably some moderate. Reports of springs from this unit by Newton (1948) suggest some moderate permeability, possibly along fractures in shallow rock. Most to almost all mantle moderate.

Weathering: Shell-breccia sandstone crops out, fresh to surface. Firm sandstone unknown.

Surficial mantle: Most to almost all is granular. Uncracked clayey sand soil.

Expansivity: Almost all bedrock and most to almost all mantle is unexpansive, the remainder significantly expansive. See sample for unit 382.

Stratigraphic thickness: 600-800 ft (J.R. Wagner, written commun., 1973).

Sources: Ham, 1952; Newton, 1948; J.R. Wagner, written commun., 1973; Wagner, 1978; two stations.

MAP UNIT 331

Geologic unit, (age), and location: Briones Sandstone, D member of Wagner (1978) (T), in the East Bay Hills.

Summary: Resistant sandstone, largely firm, some hard, mostly in thick to very thick beds. Low intergranular permeability. Almost all bedrock and most to almost all mantle is unexpansive.

Composition: Fine- to medium-grained sandstone, containing sufficient silt and clay to produce low permeability and weathering fracture. Minor conglomerate reported. Minor to some sandstone is calcite cemented and hard, some hard without calcite cement.

Hardness: Largely firm. Some sandstone is hard, some of which is calcite cemented.

Bedding: Indistinct medium to very thick (as much as 20-ft or more) beds, mostly thick to 10 ft, of hard sandstone between firm sandstone or of different compositions revealed by differences in weathering fracture. One hard sandstone bed as thick as 20 ft; calcite-cemented hard sandstone beds to thick or more.

Parting: Absent.

Fracture: Close to moderate spacing of weathering fracture in firm sandstone. Moderate to wide spacing in very thick hard bed.

Permeability: Bedrock has largely low intergranular permeability, minor moderate. Reports of springs from "basal Briones" suggest some moderate permeability, possibly as fracture permeability in shallow rock. Most to almost all mantle moderate.

Weathering: To depths greater than 15 ft.

Surficial mantle: Most to almost all is granular. Uncracked clayey sand soil.

Expansivity: Almost all bedrock is unexpansive. Most to almost all mantle is unexpansive, the remainder probably significantly expansive. See sample for unit 382.

Stratigraphic thickness: 800 ft (J.R. Wagner, written commun., 1973).

Sources: Ham, 1952; Newton, 1948; Trask, 1922; J.R. Wagner, written commun., 1973; Wagner, 1978; two stations.

MAP UNIT 332

Geologic unit, (age), and location: Monterey Group, sandstone unit (T), only at north end of the East Bay Hills near Pinole.

Summary: Almost all is firm dirty sandstone, partly tuffaceous, but contains minor shale and clayey very fine sandstone and siltstone. Underlies subdued topography. Much to most mantle is significantly expansive.

Composition: Almost all is sandstone, fine grained, well to moderately well sorted; tuffaceous at least in part, interstices filled by ash(?). Minor diatomaceous shale, hard porcelaneous shale, and clayey very fine grained sandstone and siltstone probably represent gradation upward to unit 535.

Hardness: Sandstone is firm, diatomaceous shale firm, siliceous shale hard, clayey sandstone and siltstone firm.

Bedding: In sandstone, indistinct at thick to very thick (10 ft). Diatomaceous shale interbeds medium to thick. Interbedded siliceous shale and clayey very fine sandstone and siltstone in medium to thick distinct beds.

Parting: Absent in sandstone and at contacts between sandstone and diatomaceous shale. Present in minor interbedded siliceous shale and clayey very fine sandstone and siltstone at bedding planes (moderate to wide) and within clayey sandstone and siltstone at very close spacing.

Fracture: Spacing in sandstone is close to wide, mostly moderate to wide, but weathering fracture at very close to moderate spacing, mostly close, occurs in places at depths of less than 5-10 ft. Where weathered, much sandstone scales at very close spacing. Spacing close to moderate across bedding in hard siliceous shale.

Permeability: Sandstone, clayey fine sandstone, and siltstone have low intergranular permeability. Shale has very low intergranular permeability but low fracture permeability in shallow rock. Thus, almost all bedrock has low permeability. Probably much to most mantle low to very low, much moderate.

Weathering: Sandstone weathered to depths greater than 20 ft.

Surficial mantle: Probably much to most clayey, much granular.

Expansivity: Probably most to almost all bedrock unexpansive, but some may be significantly expansive where well weathered. Much to most mantle significantly expansive, probably much unexpansive. Sample MI27, uncracked sandy and silty clay soil, typical, free swell 68 percent.

Sources: Three stations.

MAP UNIT 333

Geologic unit, (age), and location: Oursan Sandstone (T) of the Monterey Group, only in the East Bay Hills, excluding areas east of Fremont and northeast of Castro Valley.

Summary: Almost all is firm, low permeability sandstone, largely dirty to clayey, but contains some clean sandstone; indistinctly bedded. Probably much mantle is severely expansive.

Expression in aerial photographs: At Oursan Ridge, unit is clearly banded in light- and dark-toned zones 50 ft in width, intermediate to hard crests. To north and south the banding disappears, leaving homogeneous intermediate topography.

Composition: Almost all is sandstone, largely fine grained to very fine grained, some medium grained. Some sandstone (10-30 percent) is clean and well sorted, but most (30-90 percent) is silty and clayey enough to produce weathering fracture, and some contains enough clay to give the rock a waxy lustre. Includes hard, ovoid, calcite-cemented concretions mostly medium but as large as 4 ft in diameter, and rare calcite-cemented beds as thick as 5 ft. Minor siltstone to silty mudstone, and minor limestone lenses.

Hardness: Largely firm where weathered, probably firm where fresh. Concretions and calcite-cemented sandstone are hard. Sheehan (1956) reported hard arenite to north.

Bedding: Mostly indistinct, medium to very thick (as much as 20-ft or more) beds of clean and dirty sandstone distinguished by differences in weathering fracture reflecting silt and clay content. Less common distinct beds. On photographs, bands on Oursan Ridge are 50 ft in width. Radbruch and Case (1967) reported that the more resistant beds are generally thick.

Parting: On some bedding planes, but many bedding planes reflect only subtle compositional differences and do not provide parting. Present in minor rock at moderate to wide spacing. Parting is not a prominent feature of this unit.

Fracture: Firm clean sandstone has close to moderate spacing, largely moderate, some approaching wide. Dirty sandstone and siltstone have

close to very close spacing of weathering fracture, largely spheroidal, on moderate to wide iron-stained original fracture. Large and very large concretions have wide fracture spacing.

Permeability: Intergranular permeability of bedrock largely low, some very low, minor moderate in shallow rock, probably some moderate below shallow rock. Probably much mantle very low to low, much moderate.

Weathering: Weathers along fractures. Some fresh cores of spheroids occur at depth of 10 ft, most rock is weathered to depths greater than 20 ft, in places to depths greater than 30 ft.

Surficial mantle: Probably much clayey, much granular. Near sample localities BV4 and BV5, pronounced accumulation of dark cracked soils like sample BV4 in swales, uncracked or mildly cracked light-colored soils like sample BV5 on ridges.

Expansivity: Probably most bedrock unexpansive, some expansive. Probably much mantle severely expansive, much significantly expansive to possibly unexpansive. Samples: BV4, well-cracked sandy clay soil, free swell 100 percent; BV5, mildly cracked loam soil, free swell 79 percent. On Hampton Grave Road, largely mildly cracked soil, minor expansive soil.

Stratigraphic thickness: Near San Pablo Bay, as much as 525 ft although generally less than 200 ft (Sheehan, 1956). Averages about 800 ft (Pease, 1954, quoted by Radbruch and Case, 1967).

Sources: Arnold, 1908; Case, 1963; Lawson, 1914; Lutz, 1951; Newton, 1948; Pease, 1954; Radbruch, 1969; Radbruch and Case, 1967; Sheehan, 1956; six stations.

MAP UNIT 334

Geologic unit, (age), and location: Sobrante Sandstone (T) of the Monterey Group, only in Dublin-Castro Valley area of the East Bay Hills.

Summary: Almost all is dirty fine- to medium-grained sandstone; minor grit and conglomerate, and minor hard to firm concretions. Most bedrock and mantle is unexpansive, some subsoil is significantly expansive.

Expression in aerial photographs: Largely underlies swales.

Composition: (1) Sandstone, arkosic, locally micaceous, fine to medium grained, subrounded, consisting of well to moderately sorted sand that has silt and clay matrix sufficient for low permeability, scaling, and weathering fracture. (2) Grit and conglomerate. (3) Concretions, largely calcite cemented, some cemented by iron oxide.

Hardness: Firm, much approaching soft, where both fresh and weathered; some rock mass is soft owing to weathering fracture. Concretions hard to firm.

Bedding: Unbedded by our observations; Robinson (1956) reported bedding 2-4 ft in thickness. Probably some of both, but bedding probably largely indistinct, obscure (Hall, 1958). Concretions mostly medium, some large. Grit to thick.

Parting: Largely absent.

Fracture: Nearly all has moderate to wide spacing of stained original fracture, as well as close to moderate spacing of weathering fracture, some spheroidal weathering on original fracture, and very close scaling. Concretions have largely moderate fracture spacing.

Permeability: Sandstone (almost all of unit) has low intergranular permeability, grit (minor) moderate. Probably most mantle moderate, some low to very low.

Weathering: Sandstone weathered to depths of 15-20 ft, staining on fractures extends deeper. Some spheroidal weathering on original fracture.

Surficial mantle: Probably largely granular, some clayey subsoil.

Expansivity: Almost all bedrock unexpansive. Most mantle unexpansive, some significantly expansive (subsoil). Samples: HAY15A, typical dark clayey silt soil, free swell 41 percent; HAY15B, clayey subsoil, covers minor to some of unit, free swell 66 percent.

Stratigraphic thickness: 500 ft (E.E. Brabb, written commun., 1972); 300-400 ft (Robinson, 1956); 134 ft or more (Newton, 1948).

Sources: E.E. Brabb, written commun., 1972; Hall, 1958; Lutz, 1951; Newton, 1948; Robinson, 1956; two stations.

MAP UNIT 335

Geologic unit, (age), and location: Kirker Formation of Primmer (1964), tuffaceous sandstone member (T), in the monocline north of Mount Diablo.

Summary: Variable proportions along strike. More than half of unit consists of laminated to thick-bedded dirty sandstone; some (as much as one-third) is clean, soft sandstone of moderate to high permeability; and some is clayey sandstone. Minor to some bedrock is expansive, probably much mantle is severely expansive.

Expression in aerial photographs: Generally appears to be nonresistant, swale-forming unit except for light-toned resistant spur in Markley Canyon (possibly part of landslide block). Where location is fairly clear, unit has light to intermediate tone and lacks tonal bands and ribs.

Composition: (1) Clean sandstone, well sorted, fine (Primmer, 1964) to medium and coarse grained, some pebbly in places, containing jarosite in some places. (2) Dirty sandstone, weathers to white or buff color, fine to medium grained, probably much tuffaceous, largely very thin to medium bedded between partings, scales or shows weathering fracture. (3) Clayey sandstone, fine to medium grained, may be tuffaceous, grades to sandy mudstone, much behaves as clay, appears expansive. (4) Shale (black) and claystone (Primmer, 1964). (5) Calcite-cemented sandstone, in concretions as large as 6-ft ovoids and in beds to thick; also limonite nodules (Primmer, 1964). (6) Conglomerate, pebble to cobble (Primmer, 1964). (7) Tuff like unit 285, in places.

Unit has variable proportions. Major constituents are the clean sandstone, dirty sandstone, and clayey sandstone; shale, claystone, and conglomerate are minor, the conglomerate, where present, occurring near base of unit. Proportions are difficult to translate from Primmer's (1964) sections, but best overall approximation is more than half dirty sandstone, some (as much as one-third) clean sandstone, and some clayey sandstone in some of unit. Other compositions minor.

Hardness: Clean sandstone is soft, some to firm, where weathered and probably where fresh. Dirty sandstone and clayey sandstone are firm where fresh and weathered; shale good and firm; cemented rock hard.

Bedding: Clean sandstone occurs typically in very thick (commonly greater than 10-ft) distinct beds, but occurs also in medium to 10-ft beds interbedded with other compositions. Dirty sandstone ranges from very thin to thick bedded between partings and occurs in intervals as thick as 30 ft or more. Clayey sandstone is indistinctly interbedded with more or less clayey sandstone in thick to 5-ft beds. Cemented beds to thick; concretions to 6-ft ovoids.

Parting: Present within dirty sandstone largely at very close to wide spacing. Absent in clean sandstone and in clayey sandstone. Present on distinct bedding contacts. Thus, present in half to two-thirds of unit at spacings to wide.

Fracture: In clean sandstone, largely moderate but some wide spacing, moderate to 4 ft where observed in a 30-ft bed, mostly very wide to wide in very thick beds. Fracture is not mechanically significant in most clean sandstone owing to softness. Spacing in dirty sandstone and probably clayey sandstone is largely close to moderate but includes close to very close spacing of weathering fracture. Cemented beds have wide spacing; concretions unfractured or fractured at wide to 4-ft spacing.

Permeability: Clean sandstone has moderate to high intergranular permeability, much of each; dirty sandstone low; clayey sandstone low to very low; shale and claystone very low, conglomerate unknown. Thus, bedrock has largely low intergranular permeability, but some (as much as one-third) moderate and high, and some very low. Probably much mantle very low, much moderate.

Weathering: Clean sandstone weathered to depth of about 15 ft, some light-gray color at 15 ft. Clayey sandstone shows expansivity cracking.

Dirty sandstone shows scaling and parting on lamination where weathered.

Surficial mantle: Probably much granular, much clayey. Some or more is clayey like sample CL19B, dark plastic sandy clay soil, typical and uniform, more than 4 ft thick; some or more is granular like sample AS5, uncracked slightly clayey sand, a typical weathering product.

Expansivity: Probably most bedrock unexpansive, but minor to some expansive (clayey sandstone). Probably much mantle severely expansive, much unexpansive. Bedrock sample CL19A, weathered clayey fine sandstone, moderately cracked, free swell 100 percent (exaggerated), the most expansive abundant bedrock composition. Surficial mantle samples: CL19B, moderately cracked dark sandy clay soil, free swell 120 percent; AS5, uncracked slightly clayey sand, free swell 50 percent (exaggerated).

Stratigraphic thickness: 80-130 ft (Primmer, 1964); 200 ft (Brabb and others, 1971).

Sources: Brabb and others, 1971; Clark, 1918; Primmer, 1964; Society of Economic Paleontologists and Mineralogists, 1950; two stations.

MAP UNIT 340

Geologic unit, (age), and location: Sedimentary rocks near Drakes Bay, glauconitic sandstone unit (T), on Point Reyes peninsula.

Summary: Largely clean sandstone; some dirty sandstone, clayey sandstone, and mudstone. Clean sandstone is highly erodible and has moderate to high intergranular permeability. Some of both bedrock and surficial mantle is expansive.

Composition: Largely medium- to fine-grained sandstone containing minor silt, well to moderately well sorted (clean sandstone); some fine-grained to very fine grained sandstone containing abundant fines (dirty sandstone), sandy and silty mudstone, and sandstone that has abundant clay matrix (clayey sandstone). Thick bed of glauconitic sandstone at base. Local concretions.

Hardness: Clean sandstone is soft and friable where weathered and probably where fresh; dirty sandstone is largely firm both where fresh and weathered, but some dirty sandstone is hard; mudstone where fresh varies from hard beds, commonly interbedded with soft fissile interbeds, to more uniform firm rock; and clayey sandstone is soft both where fresh and weathered. Locally contains hard calcite-cemented concretions as large as 3 ft in diameter. Glauconitic sandstone is hard to firm, becoming soft where well weathered.

Bedding: Varies with rock type, but mostly absent to indistinct, in places distinct in very thick beds. In some exposures (near coast at Bear Valley), medium to very thick (as much as 20-ft or more), mostly thick, distinct beds of clean sandstone are interbedded with thin to medium beds of dark clayey sandstone and with less common hard medium beds of sandy siltstone. In places, mostly medium beds of silty mudstone are distinctly interlayered with thin to medium beds of shaly mudstone. Glauconitic bed at base of unit is thick.

Parting: Absent except in bedded silty mudstone, where shaly interbeds have very close fissility and parting is present on bedding planes at mostly moderate spacing.

Fracture: Varies with composition. Spacing in clean sandstone ranges from close to very wide, mostly moderate to wide; no weathering fracture. Dirty sandstone has original spacing at moderate to very wide, mostly moderate to wide, but weathering produces secondary fractures at very close to moderate spacing. Mudstone shows variable fracture spacing, from close to wide, mostly close to moderate, and where weathered much produces very close fracture. Clayey sandstone is fractured at moderate to wide spacing, but weathering produces additional close-spaced fractures. Fractures are in many places iron stained or iron cemented, in places bleached, and in places show simply diminution of grain size. Glauconitic sandstone has close to moderate spacing.

Permeability: Clean sandstone has moderate to high intergranular permeability; dirty sandstone low; mudstone low to very low; clayey sandstone mostly very low, some low where clay matrix does not completely fill interstices. Thus, bedrock has largely moderate to high intergranular permeability, some low to very low. Most mantle moderate, some low to very low.

Weathering: Clean sandstone weathered to depths greater than 25 ft; dirty sandstone completely weathered to depth of 10 ft, weathered along fractures to 20 ft; weathering depth in mudstone unknown, but surface weathering rapidly produces very close chips; clayey sandstone weathered to depth of about 5 ft.

Surficial mantle: Largely granular, some clayey.

Expansivity: Most bedrock is unexpansive, some is significantly expansive, minor to some severely expansive. Most mantle unexpansive, some expansive, minor to some severely expansive. Bedrock samples: DB12, well-cracked clayey sandstone, typical of less than 20 percent of unit, free swell 105 percent; DB19, black sandy claystone, minor constituent, free swell 62 percent; DB20, well-cracked weathered clayey sandstone, fairly abundant, free swell 74 percent; DB22A, mildly cracked clayey sandstone, abundant constituent (more than half of exposure in places), free swell 58 percent. Surficial mantle sample DB14, typical soil, free swell 48 percent.

Stratigraphic thickness: About 500 ft (estimated from map).

Sources: J.A. Bartow, written commun., 1972; Blake and others, 1974; Galloway, 1977; 10 stations.

MAP UNIT 342

Geologic unit, (age), and location: Temblor(?) Sandstone (T), only along west side of Santa Clara Valley near Los Gatos.

Summary: Largely soft clean sandstone, some to much siltstone and clayey sandstone. Clean sandstone has moderate permeability. Most bedrock and mantle is unexpansive.

Expression in aerial photographs: Intermediate topography that is less resistant than unit 501. Banded by light-toned zones 5-10 ft in width between dark-toned zones as wide as 20 ft, which suggests some to dominant clayey sandstone and siltstone (dark).

Composition: (1) Sandstone, medium to coarse grained, well to moderately well sorted, little matrix in most but some is slightly silty, interbedded with minor clay-saturated sandstone to siltstone. Contains minor firm concretions. Somewhat tuffaceous near contact with unit 260 (Bailey and Everhart, 1964). (2) Foraminiferal siltstone, some slightly siliceous (sub-porcelaneous), that has very thin shale interbeds; and clayey sandstone. (3) Porcelaneous shale and siltstone similar to unit 501. (4) Conglomerate of pebbles to boulders common at or near base (E.E. Brabb, written commun., 1972). (5) Locally includes volcanic rock like unit 260.

Probably half to two-thirds of unit is sandstone (composition 1), one-third to half is siltstone and clayey sandstone (composition 2). Minor conglomerate, porcelaneous rock, and volcanic rock.

Hardness: Sandstone is soft where weathered and probably where fresh and contains minor firm concretions. Siltstone firm, porcelaneous rock hard, and conglomerate probably soft to firm with hard clasts.

Bedding: Sandstone occurs in barely distinct medium to 5-ft beds between thin, some to medium, clay-saturated sandstone and siltstone, but sandstone looks massive in very thick (tens of feet) bed. Banding on photographs suggests very thick intervals of both sandstone and clayey rock. Siltstone is all very thin bedded or has parallel fabric, and some has very thin shale interbeds. Porcelaneous rock variably bedded.

Parting: Present on bedding planes in sandstone at moderate to 5-ft spacing; much siltstone is largely unparted to variably parted, but some to most has regular close to moderate parting similar to unit 501. Porcelaneous rock in many places is regularly parted at close to moderate spacing.

Fracture: Indistinct to absent in sandstone, moderate where apparent. Close to moderate in siltstone and porcelaneous rock. Probably absent, effectively clast size (close to moderate), in conglomerate. Firm concretions in sandstone to medium.

Permeability: Sandstone has moderate intergranular permeability; siltstone and clayey sandstone low to very low; porcelaneous rock very low. Low fracture permeability in shallow siltstone and clayey sandstone, low to moderate in shallow porcelaneous rock. Thus, most bedrock has moderate intergranular permeability; some to much is low to very low, but this has fracture permeability in shallow rock. Most mantle moderate.

Weathering: Sandstone weathered to depths greater than 15 ft.

Surficial mantle: Largely granular. One observation of uncracked silty soil over siltstone. Largely sandy and silty soils.

Expansivity: Bedrock and mantle largely unexpansive, some to much mantle significantly expansive. Sample LOG3, very mildly cracked sand-silt soil, typical, free swell 63 percent (probably exaggerated).

Sources: Bailey and Everhart, 1964; E.E. Brabb, written commun., 1972; two stations.

MAP UNIT 343

Geologic unit, (age), and location: Domengine Sandstone, upper sandstone member (T), only on southwest flank of Mount Diablo.

Summary: Largely very thick bedded (tens of feet) sandstone of moderate permeability, much crops out, and some interbedded clayey rock. Sandstone varies from soft to hard where weathered, most firm, some marginal hard rock ripped with difficulty. More than half of unit is very thick bedded sandstone, as much as two-fifths is clayey rock plus sandstone in beds to thick. Unit is largely unexpansive, but some clayey bedrock and mantle is severely expansive. See unit 344.

Expression in aerial photographs: Strikingly banded by zones of dramatic outcropping sandstone against dark-toned tree and brush cover. About equally abundant light-toned bands (outcrop) ranging from 5 to 150 ft in width, many as wide as 100 ft, between dark-toned bands (vegetation) 5-100 ft in width. Toward unit 442 and especially to south near Riggs Canyon, includes some area lacking outcrop, ribbed, grass covered, similar in expression to unit 442. Spacing of major joints in outcropping sandstone is 5 to more than 100 ft, showing some relation to bed thickness. Unique intermediate topography having some sharp crests along outcrops.

Composition: (1) Sandstone, largely medium to coarse grained, ranging from fine to very coarse grained, poorly to moderately sorted, silty but little or no clay. May contain tuffaceous clasts. (2) Calcite-cemented concretions and beds in sandstone. (3) Interbedded fine-grained clayey rock, including mudstone to siltstone to clayey very fine sandstone and shale. Some shale is carbonaceous and includes minor lignite (Dickerson, 1916).

Unit is largely sandstone, but contains some (as much as one-third) fine-grained clayey rock. Most fine-grained clayey rock is mudstone to clayey very fine sandstone, but some is shale. Of entire unit, over half is very thick bedded sandstone, as much as two-fifths is clayey rock containing sandstone beds to thick (measured from Dickerson, 1916).

Hardness: Sandstone occurs both as firm to hard (weathered) outcropping rock and firm to soft (weathered) rock, both about equally abundant. The firm to hard rock (not calcite cemented) includes much firm rock and much marginal hard rock that dents slightly when struck by hammer; in part case hardened. Calcite-cemented sandstone hard. Clayey rock weathers firm, probably firm where fresh.

Bedding: Intervals tens to hundreds of feet thick of: (a) Massive sandstone in beds tens of feet thick; (b) largely distinct medium to thick beds of sandstone between medium to 4-ft beds of fine-grained clayey rock, many of which are distinctly interbedded at thin to medium; (c) thinly to thickly interbedded clayey rock, largely distinct. Mudstone intervals and bedded sandstone intervals are thicker and more abundant near base. Massive sandstone beds in many places are separated by partings or by mudstone intervals to thick. Concretions as large as 10 ft in diameter. See sections by Dickerson (1916) and Colburn (1961).

Parting: Absent within sandstone, except in some soft-weathering sandstone at very close spacing parallel to and near ground surface. Present at distinct bedding planes, both at very wide (tens of feet) bounding very thick sandstone beds and at close to wide spacing in interbedded rocks. Very close spacing in shale. Over half at very wide spacing (tens of feet); as much as two-fifths at close to wide spacing.

Fracture: Very thick sandstone beds have irregular fracture, the spacing of which ranges from moderate to 15 ft, largely wide to 4 ft, but outcropping sandstone commonly has 6- to 15-ft spacing. Sandstone beds to thick have spacing similar to bed thickness. Fine-grained clayey rock has close to very close spacing of weathering fracture superimposed on moderate to wide, stained, original spacing.

Permeability: Most sandstone has moderate intergranular permeability, the remainder low. Clayey fine-grained rock very low to low. Thus, bedrock has largely moderate intergranular permeability, but includes some to half low and very low (some of each). Most mantle moderate, some very low to low.

Weathering: Sandstone not seen fresh.

Surficial mantle: Largely granular, some clayey. Largely uncracked clayey sand soil, such as sample D12B, and some sandy clay soil, dominant locally, such as sample D12C. Observations suggest that granular soil has moved downslope over clayey soil, and so expansive clayey soils are concealed in places.

Expansivity: Bedrock largely unexpansive, but some severely expansive (mudstone). Most mantle unexpansive, some severely expansive. Bedrock sample D12A, mudstone, moderately cracked, typical of interbeds throughout unit, free swell 93 percent. Surficial mantle samples: D12B, uncracked clayey sand soil, free swell 37 percent; D12C, moderately cracked sandy clay soil, free swell 79 percent.

Stratigraphic thickness: 1,500-3,500 ft (Brabb and others, 1971); about 2,400 ft near Cave Point (Dickerson, 1916); 1,400-1,650 ft in Pine Canyon area, 1,200 ft near Mount Diablo State Park, 2,750 ft near Cave Point (Colburn, 1961).

Sources: Brabb and others, 1971; Colburn, 1961; Dickerson, 1916; three stations.

MAP UNIT 344

Geologic unit, (age), and location: Domengine Sandstone, upper part (T) (equivalent to Escobar Sandstone of Weaver, 1953), only in Pacheco syncline, west of Concord.

Summary: Largely firm sandstone of moderate permeability, some clayey interbeds, minor to some cemented sandstone. Sandstone erodes rapidly, is difficult to trench owing to lack of brittleness, is ripped at least in places with one tooth, and contains abundant hard blocks as large as 20 ft in diameter. Most bedrock and mantle is unexpansive, some clayey rock and probably overlying mantle are expansive. See unit 343.

Expression in aerial photographs: Most-resistant Tertiary unit in Pacheco syncline. Much hard topography of sharp crests and steep ribs between broad draws, producing an almost glaciated appearance that is characteristic but not everywhere present. Some intermediate topography on strike with hard topography. Underlies a number of topographic highs in Martinez, where it forms intermediate to hard topography. Many pits (borrow pits?). Forms crest of ridge.

Composition: Sandstone, interbedded with shale, silty and sandy shale, mudstone, and clayey sandstone. Clayey interbeds have sufficient clay for dominantly clayey behavior, and most are dominantly shale or mudstone. Sandstone is largely clean and moderately to moderately well sorted, mostly medium grained but ranges from fine to coarse grained, and typically contains scattered granules of white quartz and black chert that in places are concentrated as beds and stringers within sandstone beds. Sandstone grains are angular to subangular and are probably tuffaceous in part. Sandstone generally contains minor silt-sized angular grains.

Unit is largely sandstone, some clayey rock as interbeds (see section by Weaver, 1953). Basal 400 ft(?) is poorly exposed, composed of unknown proportions of sandstone, silty sandstone, sandy shale, and shale (Weaver, 1953), probably thin to thick bedded.

Hardness: Sandstone is mostly firm, some approaching soft, where weathered, probably the same where fresh, but some is quite firm. Concretions hard. Shale, mudstone, and clayey sandstone are firm.

Bedding: Distinct, occurring in two general characters: (1) very thick (as much as 50-ft or more) sandstone beds (some internally bedded by concentrations of different grain sizes) between thin to very thick (12 ft) shaly sequences that in many places are very thin to thin bedded and contain thin sandstone beds; and (2) semirhythmic medium to very thick (4-ft) sandstone interbedded with medium shaly beds. Minor to some carbonate-cemented beds, more commonly horizons of concretions, which range from medium to very thick (as much as 20 ft), mostly very thick. See Weaver's (1953) section for details.

Parting: At bedding planes, some of which are spaced moderate to 4 ft, some very wide (10 ft and more), and within shaly interbedded sequences at very close to moderate spacing.

Fracture: In very thick bedded sandstone, fractures are irregular in spacing and orientation, ranging from close to very wide spacing (as much as 4 ft, rarely as much as 8 ft), much of which is moderate to wide. Medium to very thick (4-ft) bedded sandstone has regular fractures perpendicular to bedding at moderate spacing, some to wide. Shaly interbedded sequences have close to very close spacing, some moderate in thin sandstone. Spacing in sandstone is close to moderate where highly weathered within about 8 ft of the ground surface. Concretions have moderate to wide spacing, but fractures are tight; effective spacing is size of concretions (mostly very large, as much as 20 ft).

Permeability: Most sandstone has moderate intergranular permeability, some low; clayey interbeds very low, some low. Low fracture permeability in some shallow clayey rock. Thus, most bedrock has moderate intergranular permeability, some low to very low. Most mantle moderate, probably some low to very low.

Weathering: Sandstone weathered to depths greater than 35 ft; shaly interbeds fresh at 8 ft. Close to moderate spacing of extreme weathering fracture to depth of about 8 ft in sandstone.

Surficial mantle: Largely granular, probably some clayey.

Expansivity: Most bedrock unexpansive, but minor to some severely expansive (clayey rock). Most mantle unexpansive, probably some expansive. Samples: WC2, typical shale interbed, free swell 80 percent; WC9, sandy soil on sandstone, typical of most of unit, free swell 30 percent.

Stratigraphic thickness: 1,690 ft (Weaver, 1953).

Sources: Weaver, 1953; seven stations.

MAP UNIT 345

Geologic units, (age), and location: Meganos Formation, Divisions A and B of Clark and Woodford (1927) (T), near Mount Diablo.

Summary: To west, unit is largely coarse clean sandstone, soft to firm, in very thick beds, and includes basal conglomerate. To east, as much as half or more of unit is clayey rock, conglomerate is absent, and the remainder ranges from coarse clean sandstone to dirty sandstone. Minor cemented rock. Minor to some bedrock and some to much mantle are severely expansive, largely toward east end of unit.

Expression in aerial photographs: Resistant unit. At west end of exposure, where separated from resistant unit 628, largely forms hard, ribbed dip slope of sharp-crested hogback, but includes some resistant areas of intermediate topography. Along main part of Deer Valley, where unit is adjacent to unit 628 on the downslope side, either looks identical to unit 628 or forms horizontal-crested spurs that are largely sharp crested and lack ribs. Suggestion here of discontinuous nonresistant zone 200 ft or more in thickness at base of this unit or top of unit 628. Near sample locality AS30, unit becomes subdued intermediate topography that contains discontinuous light-toned bands as wide as 100 ft or more; here most looks identical to unit 628, which likewise has become more subdued. Farther southeast, unit becomes nondescript intermediate topography, much of which contains tonal bands; light-toned bands are mostly as wide as 10 ft, some as wide as 50 ft, dark-toned bands are 10-100 ft wide.

Composition: (1) Clean sandstone, coarse to medium grained, moderately well to well sorted, some slightly silty, quartzose, including some grit and zones and beds of pebbles. Quarried for glass sand. (2) Calcite-cemented beds and concretions of fine- to coarse-grained sandstone. (3) Sandstone, variably tuffaceous to dirty, of well-sorted fine grains, ranging from very fine to medium. Scaly. (4) Clayey rock, including some mudstone, some of which is tuffaceous; some shale, some of which is carbonaceous; and some clay-saturated sandstone. (5) Conglomerate, largely of rounded pebbles and cobbles, boulders in places (Johnson, 1964); rarely, near Stewartville, includes angular slabs of fossiliferous Cretaceous sandstone more than 6 ft in width (Clark, 1921). Clasts are largely quartz, quartzite, chert, limestone, and sandstone (Clark and Woodford, 1927); 75 percent metamorphic, minor igneous, 25 percent sandstone and limestone (Johnson, 1964).

Unit has variable proportions along strike. Toward west, conglomerate is present at base, the remainder probably largely composition 1 but containing some of compositions 3 and 4. Toward east, conglomerate is absent to minor, some to half is composition 1, one-third to more than half is composition 4, some to one-third is composition 3. Cemented rock is minor, but blocks are common.

Hardness: Coarse sandstone (composition 1) varies soft to firm where weathered and probably fresh, some case hardens. Scaly sandstone (composition 3) and clayey rock are firm where fresh and weathered. Cemented rock hard. Conglomerate has largely hard clasts in probably firm matrix; grit firm.

Bedding: Coarse sandstone (composition 1) occurs largely in very thick beds, most greater than 6 ft and in many places 25-150 ft thick, which in many places are internally crossbedded at very thin to medium, largely indistinctly (little parting). This sandstone occurs in very thick (100-ft) intervals that either lack internal interbeds or contain medium to 4-ft clayey interbeds. Grit as thick as 5 ft or more. Conglomerate beds unknown. Intervals of clayey rock are as thick as 150 ft or more; these are internally distinctly to indistinctly interbedded at medium to 10 ft and contain minor interbeds to thick of clean sandstone. Scaly sandstone (composition 3) probably occurs in very thick (30- to 70-ft) intervals in which beds are more than 6 ft thick. Cemented rock to thick.

Parting: Within sandstone intervals, on distinct bedding (largely 6-50 ft) and within some crossbedded rock irregularly at moderate to 6-ft spacing. Within clayey rock, ranges from very close spacing in shale, to largely close spacing in mudstone, to 10 ft at beds of clayey sandstone; overall largely at very close to moderate spacing in clayey rock. In much cemented rock at close to moderate spacing.

Fracture: Coarse sandstone (composition 1) has indistinct fracture at moderate to wide to 10-ft spacing, most at moderate spacing within 10 ft of the ground surface. Scaly sandstone has very close to moderate spacing of weathering fracture, much scales at very close. Clayey rock has very close to moderate spacing of weathering fracture. Cemented rock largely wide to 4 ft, some close to moderate spacing.

Permeability: Intergranular permeability in sandstone of composition 1 moderate to high, some of each, lesser low; in sandstone of composition 3 low; clayey rock very low to low; conglomerate probably moderate. Thus, permeability of bedrock ranges from largely moderate to high toward west end of unit to largely very low to low, but including some to half moderate to high, toward east end. Much to most mantle moderate, some to much very low.

Weathering: Coarse sandstone weathered to depths greater than 40 ft.

Surficial mantle: Much to most granular, some to much clayey. Half to most is uncracked to very mildly cracked sandy soil, some to half is clayey soil such as sample AS30.

Expansivity: Most bedrock unexpansive, some to much expansive, minor to some severely expansive. Some to much mantle severely expansive, much to most unexpansive to possibly significantly expansive. Samples:

BW3, weathered shale, mildly cracked, most expansive abundant bedrock constituent, free swell 90 percent; AS30, typical clayey soil, free swell 118 percent. Most of the expansive materials are toward eastern end of outcrop area.

Stratigraphic thickness: 600-800 ft, basal conglomerate as much as 90 ft (Brabb and others, 1971); about 470 ft, of which about 20 ft is basal conglomerate (Johnson, 1964); 0-750 ft, of which 1-50 ft is conglomerate (Clark and Woodford, 1927).

Sources: Brabb and others, 1971; Clark, 1921; Clark and Woodford, 1927; Colburn, 1961; Johnson, 1964; Taff, 1935; four stations.

MAP UNIT 350

Geologic unit, (age), and location: San Pablo Group, undivided (T), only on southwest flank of Mount Diablo.

Summary: About half sandstone, firm to hard; and half clayey rock having weathering fracture, largely clayey and dirty sandstone. As much as one-sixth of unit is hard rock, much sandstone quite firm. All apparently ripped, some with difficulty (deep grooves). Bedding mostly very thick; permeability mostly low, some (as much as one-third) moderate. Some rock used for crushed rock (Davis and Goldman, 1958). Some to much severely expansive surficial mantle.

Expression in aerial photographs: Unit includes two shell-breccia ridges on Ygnacio Valley Road and Shell Ridge. Near Shell Ridge, includes prominent sharp-crested Shell Ridge hogback and less resistant valley; here unit is largely light toned but includes lesser dark-toned zones in swales and on aprons. Near Mount Diablo State Park, lower 1,000 ft forms characteristic resistant intermediate topography, brush covered, and has outcropping light-toned bands largely 5-20 ft in width, some as wide as 50 ft; upper 500 ft is subdued intermediate topography, much dark in tone, similar in resistance to adjacent unit 401. Minor patches are nonresistant intermediate topography. Packets of both light-toned resistant bands and dark-toned nonresistant bands mostly 50-100 ft thick, some of each to several hundred feet thick.

Composition: (1) Sandstone, resistant, some crops out, largely medium to coarse grained but in places fine grained, some contains tuffaceous clasts; moderately to well sorted, much clean enough for moderate permeability, but much contains sufficient clay pore fillings, flakey clay coatings, or silt to have low permeability. The low permeability sandstone is more resistant, crops out. Sandstone in places includes grit and pebbly beds. This sandstone used as building stone for buildings at summit of Mount Diablo (Pampeyan, 1963). Grades to: (2) Calcite-cemented shell beds in gritty and pebbly, firm, coarse- to medium-grained sandstone, some of which has blue grain coatings (see unit 400). These beds occur in groups to form "reefs." Shell Ridge is held up by these beds. Also calcite-cemented beds without shells. (3) Clayey to dirty sandstone, largely fine to medium grained, low permeability, probably some tuffaceous; ranges from sandstone that is well sorted but clay clogged to that which is muddy and fine to very fine grained; nonresistant and weathers spheroidally, scales, or otherwise develops weathering fracture. (4) Mudstone, siltstone, and less commonly shale.

Unit is about half sandstone (compositions 1, 2), half nonresistant clayey rock (compositions 3, 4). Of sandstone, some (as much as one-third) is hard (some calcite-cemented, some not), and some to more than half has moderate permeability, the rest low. Shell beds are minor overall but prominent. Of clayey rock, most is clayey to dirty sandstone (composition 3), minor to locally some mudstone (composition 4).

Hardness: Sandstone is largely firm, much quite firm approaching hard, but minor to as much as half is hard (this includes calcite-cemented beds and shell beds, but much hard sandstone is not apparently calcite cemented). Clayey rock firm. Thus, unit has minor to one-fourth, probably to one-sixth, hard rock, which is minor toward the north end of outcrop band near Walnut Creek and becomes more abundant toward the south. Unit generally contains some hard rock, estimated about one-sixth near Mount Diablo Road.

Bedding: Sandstone occurs in distinct very thick beds, 6-200 ft thick, some of unit in 100-ft and thicker beds, some in 20- to 100-ft beds, most beds probably 6-30 ft. Some of these beds are parted internally, largely at moderate to 6-ft spacing, and many are internally laminated. Some sandstone medium to thick. Shell beds are mostly medium, but as thick as 4 ft, and occur in groups within very thick (tens of feet) firm pebbly sandstone. Other calcite-cemented rock probably as thick as 6-30 ft. Clayey rock occurs in intervals as thick as 150 ft, generally as thick as 60 ft; these intervals are largely internally bedded at thin to medium, most distinct and accompanied by parting, but some are thick to very thick bedded (as much as tens of feet).

Parting: Present on bedding contacts between sandstone and clayey rock, largely at very wide spacing (6 ft or more); within most clayey intervals on distinct bedding at close to moderate spacing, but some zones as wide as 6 ft or more lack parting. Within sandstone, some to most parted at moderate to 6-ft spacing, some unparted.

Fracture: Spacing in sandstone largely moderate to 4 ft, some as much as 6 ft. Cemented shelly beds largely wide to 4 ft, some as much as 8 ft. Clayey rock has moderate to 4-ft original spacing and superimposed very close to moderate spacing of weathering fracture, much as scaling and spheroidal weathering.

Permeability: Some to more than half of sandstone has moderate intergranular permeability, the remainder low; clayey sandstone low; mudstone very low to low; cemented rock very low to low. Thus, bedrock contains some (as much as one-fourth or one-third) moderate intergranular permeability, the remainder largely low, minor very low. Much to most mantle moderate to high, some to much very low.

Weathering: No color change in sandstone to depths greater than 25 ft. Clayey sandstone fresh at 5 ft in places, but weathering fracture occurs to base of cuts at depths greater than 25 ft (possibly on surface of cut only). Possible case hardening of some sandstone.

Surficial mantle: Much to most granular, some to much clayey. Unit includes some or more of both granular soil (samples D9, WC47) and sandy clay soil (samples WC50, WC51), the granular soil dominant to the south.

Expansivity: Most bedrock unexpansive, probably minor to some expansive (clayey rock). Much to most mantle unexpansive to possibly significantly expansive, some to much severely expansive. Samples: D9, slightly clayey sand soil, very mildly cracked, free swell 62 percent; WC47, dark clayey sand subsoil, typical, free swell 65 percent; WC50, well-cracked black sandy clay soil, free swell 98 percent; WC51, moderately cracked brown sandy clay soil, free swell 100 percent. Sand soils appeared unexpansive in the field, free swell probably exaggerated.

Stratigraphic thickness: About 1,200-2,000 ft.

Sources: Davis and Goldman, 1958; Pampeyan, 1963; Weaver, 1909; seven stations.

MAP UNIT 351

Geologic unit, (age), and location: San Pablo Group, undivided (T), only in the East Bay Hills.

Summary: Not seen in field. Probably largely sandstone, dirty to clean, some mudstone and shale, like units 381, 320, 405, and 432; see descriptions of these units for likely character of materials. Sandstone probably occurs in very thick beds, obscurely bedded (Lawson, 1914).

Permeability: Bedrock probably has largely low intergranular permeability, some moderate, some very low. Probably most mantle moderate, some to much low to very low.

Surficial mantle: Probably much to most is granular, some to much clayey.

Expansivity: Probably most bedrock unexpansive, some expansive (clayey rock). Probably most mantle unexpansive to significantly expansive, some to much severely expansive.

Sources: Ham, 1952; Lawson, 1914.

MAP UNIT 352

Geologic unit, (age), and location: Neroly Sandstone (T), only in area north and east of Mount Diablo.

Summary: More than half of unit consists of very thick bedded, firm, blue sandstone, the remainder largely of thick to 4-ft sandstone beds interbedded with tuffaceous siltstone and dirty sandstone. Some moderate permeability. Probably some to much mantle severely expansive.

Expression in aerial photographs: To east, subdued intermediate topography (similar to unit 353, more subdued than unit 125); major resistant and nonresistant bands 200-500 ft in width. Toward west, mostly resistant intermediate to minor hard topography. Where good exposure, light-gray and dark-gray bands are visible, 5-30 ft in width, mostly 10-20 ft, some zones as wide as 100 ft; dominant light tone to unit. Some minor white bands, 5-10 ft in width, possibly cemented sandstone. Some nonresistant intervals as wide as 200 ft. Most of unit lacks ribs.

Composition: (1) Clean andesitic sandstone, well sorted; ranges from fine to coarse grained, but most is medium to coarse grained; characteristic blue coatings on grains (see unit 400); includes stringers and lenses of pebble conglomerate and grit. Grades to more poorly sorted, probably tuffaceous, low permeability blue sandstone of similar grain size. Some of both. (2) Dirty to muddy to clay-saturated fine- to medium-grained sandstone, probably much tuffaceous. (3) Siltstone, much sandy, most probably tuffaceous, approaches mudstone in character; contains fossil plant debris. (4) Sandy tuff, white (Condit, 1938), may be equivalent to composition 3. (5) Calcite-cemented sandstone. (6) Pebble conglomerate having clean sandstone matrix.

Sandstone (composition 1) is characteristic of unit and in places appears to make up nearly the entire unit. More commonly, unit consists of more than two-thirds sandstone interbedded with some dirty sandstone and (or) siltstone or tuff. Minor conglomerate as lenses and stringers in clean sandstone, and minor cemented sandstone. Very thick bedded sandstone occupies more than half of unit, in places apparently nearly all of unit. Of sandstone, some or more of both clean, moderate permeability rock and more poorly sorted, low permeability rock.

Hardness: All compositions firm where weathered and probably where fresh, except cemented sandstone, which is hard to quite firm. Pebbles in conglomerate hard. Much sandstone is friable with difficulty.

Bedding: Two habits: sandstone in very thick (5- to 30-ft or more) distinct beds; and sandstone in thick to 5-ft beds, largely gradationally interbedded with medium to 4-ft dirty sandstone or siltstone. The very thick bedded sandstone can form nearly uninterrupted stacks of sandstone as thick as 75 ft or more, but these include minor interbeds between the 5- to 30-ft beds. The thick to 5-ft interbedded habit has largely (70 percent or more) gradational contacts between beds, and most of these bedding planes are irregular. Sandstone is commonly internally very thin to thin bedded and crossbedded by pebble trains and concentrations of different grain sizes. Cemented sandstone occurs in beds as thick as 6 ft that grade to concretionary zones (Clark, 1912). Very thick bedded sandstone appears to occupy more than half of unit, but thick to 5-ft bedded sandstone generally occupies more than 30 percent of unit and occurs in intervals as thick as 200 ft. Tuff beds as thick as 30 ft (Condit, 1938). See section by Condit (1938).

Parting: Absent within very thick sandstone except possibly where well-weathered; present as sharp discontinuity on at most 30 percent of bedding planes in thick to 5-ft bedded rock; present only locally within siltstone. Thus, largely very widely spaced (10-ft or more) partings in sense of slope failure planes; for ripping, the very thick bedded half of unit has very wide (more than 5-ft) spacing, the thick to 5-ft bedded part probably has ripping parting at wide to 5-ft spacing. In some well weathered rock, spacing at close to wide in all compositions.

Fracture: In sandstone, spacing ranges from close to more than 8 ft; most falls within the range of moderate to 5 ft, some greater than 4 ft. Most spacing in very thick beds is wide to 4 ft. Much fracture is about perpendicular to bedding. Dirty sandstone and siltstone have close to moderate spacing of original fracture and close to very close spacing of weathering fracture, some of which is spheroidal. Cemented sandstone has spacing to wide, some probably to 5 ft.

Permeability: Clean sandstone has moderate intergranular permeability; more poorly sorted sandstone low; dirty to clayey sandstone low; siltstone and tuff low, some to very low; conglomerate moderate to low; cemented sandstone low to very low. Thus, some to half of bedrock has moderate intergranular permeability, the remainder largely low. Probably much to most mantle very low to low, much moderate to high.

Weathering: No apparent effect on clean sandstone except suggestion of development of parting on internal lamination where well weathered (within 5 ft of surface at sample locality BHS20). Weathering fracture in dirty sandstone and siltstone. Weathering frees clay bound up in tuffaceous component, so that, while rock does not appear clayey, soils are clayey.

Surficial mantle: Probably much to most clayey, much granular.

Expansivity: Most bedrock unexpansive but probably minor to some expansive (clayey rock). Much to most mantle expansive, probably much of this severely expansive. Samples: AS3, mildly cracked dark sandy clay soil, typical, free swell 120 percent; BHS20, mildly cracked dark clay soil, typical, free swell 90 percent; HB11, brown sandy clay subsoil, typical, free swell 140 percent; HB7, moderately cracked sandy clay subsoil, free swell 101 percent. Free-swell values may be exaggerated.

Stratigraphic thickness: 250 ft 1 mile west of Kirker Creek (Clark, 1912).

Sources: Clark, 1912; Condit, 1938; Vitt, 1936; J.R. Wagner, written commun., 1973; seven stations.

MAP UNIT 353

Geologic unit, (age), and location: Cierbo Sandstone (T), only in the monocline north of Mount Diablo.

Summary: Largely (about two-thirds) firm and soft sandstone in very thick (most greater than 10-ft, as much as 90-ft) beds; some mudstone, siltstone, and interbedded sandstone.

Expression in aerial photographs: In places, unit is equally resistant to unit 352 and is banded by largely light-toned bands 20 to more than 100 ft in width and lesser dark-toned bands as wide as 20 ft, no apparent difference in resistance. In other places, unit is relatively nonresistant (subdued intermediate topography) and forms swales. To east, forms variably resistant subdued intermediate topography, from fairly resistant bold rounded hills to very subdued intermediate topography.

Composition: (1) Clean sandstone, well to moderately well sorted, ranges from fine to coarse grained, much medium to coarse grained; includes stringers of pebbles and tuffaceous clasts. (2) Conglomerate beds and conglomeratic zones in clean sandstone, largely pebbles, lesser cobbles as much as 4 in. in diameter, in clean sandstone matrix. (3) Grit, clean, thin beds in clean sandstone, high permeability. (4) Dirty sandstone, much tuffaceous, fine to medium grained. (5) Clayey rock, including mudstone, siltstone, and clayey sandstone to sandy mudstone.

Unit contains some each of clean sandstone, dirty sandstone, and clayey rock. These materials occur in a consistent pattern: an upper one-fourth to one-third sandstone body; a middle one-fourth to as much as one-half interbedded mudstone, siltstone, and sandstone; and a lower one-fourth to one-half sandstone that in places is conglomeratic. Clean sandstone and dirty sandstone occur both separately and intermixed in both top and bottom sandstone bodies. Conglomerate near bottom of section is minor constituent overall. Minor grit.

Hardness: Clean sandstone and dirty sandstone weather both soft and firm; fresh clean sandstone is probably soft, fresh dirty sandstone probably firm. Unit includes some or more of both soft and firm sandstone. Clayey rock firm where fresh and weathered. Clasts in conglomerate hard, matrix soft to firm.

Bedding: Unit consists of three zones that are tens of feet thick. Bedding in the two sandstone parts is variable: from very thick (30- to 90-ft) bedded sandstone; to thick to very thick sandstone distinctly interbed-

ded with thin to 10-ft conglomerate, fossil layers to medium(?), or thin shale partings; to indistinctly interbedded sandstones of cleaner and dirtier compositions. The middle mudstone zone is generally distinctly to indistinctly bedded in medium to 6-ft beds of all compositions. Clean sandstone is commonly internally crossbedded by stringers of pebbles or tuffaceous clasts.

Parting: At very wide (greater than 5-ft, much greater than 10-ft) spacing in both sandstone zones; at moderate to 6-ft spacing in mudstone zone.

Fracture: Clean sandstone has largely moderate to wide spacing, some very wide (as much as 6 ft); some has weathering fracture at moderate spacing. Dirty sandstone probably has largely close to moderate spacing of original fracture and weathering fracture, some wide original spacing. Clayey rock has very close to moderate spacing.

Permeability: Intergranular permeability of clean sandstone moderate, dirty sandstone low, clayey rock very low to low, grit high, conglomerate largely moderate (owing to clean sand matrix). Thus, some to much bedrock moderate, much low, some very low, minor high. Probably much mantle moderate, much very low to low.

Weathering: Some spheroidal weathering in muddy sandstone.

Surficial mantle: Probably much granular, much clayey.

Expansivity: Most bedrock is unexpansive, some probably expansive (mudstone). Probably much mantle severely expansive, much unexpansive to significantly expansive. Sample CL22, uncracked clayey sand soil on knob, free swell 60 percent (possibly exaggerated). See units 320 and 354.

Stratigraphic thickness: 200-2,000 ft reported for Cierbo Sandstone (Brabb and others, 1971), but 2,000 ft is misleading for this area in the monocline north of Mount Diablo. Thins to east.

Sources: Brabb and others, 1971; Clark, 1912; Primmer, 1964; Weaver, 1909; four stations.

MAP UNIT 354

Geologic unit, (age), and location: Cierbo Sandstone (T), only in Livermore Valley area.

Summary: About equally abundant clean soft to firm sandstone, including some conglomerate, and clay-saturated sandstone to sandy mudstone; the clean materials underlie high ground, the clayey materials low ground. Minor to locally some calcite-cemented rock. Some bedrock and much mantle is severely expansive.

Expression in aerial photographs: Over most of area, unit consists of fairly subdued, lumpy, intermediate topography that shows very subdued banding on dark tone. Distinctly less resistant than adjacent unit 400. Near Morgan Territory Road, unit is resistant with respect to unit 400 and consists of intermediate to hard topography that has broadly spaced ribs and light- and dark-toned bands 5-200 ft in width, most 5-50 ft. Area near Del Valle Reservoir has intermediate topography that contains abundant light-toned bands 5-50 ft in width that are dominant in resistant intervals as wide as 500 ft, but light tone does not clearly constitute more than half of unit.

Composition: (1) Sandstone, medium to coarse grained, ranging from fine to very coarse, moderately to moderately well sorted; largely clean, some silty, much tuffaceous, clay absent or minor coatings; largely moderate, some high, some low permeability; some has gritty and pebbly zones, and some beds contain large oyster shells. Grades to: (2) Conglomerate of rounded to angular pebbles and cobbles, some as much as 6 in. in diameter, most less than 3 in., most hard, some firm, in matrix of clean sandstone similar to composition 1. (3) Calcite-cemented beds, zones, and concretions in sandstone and conglomerate, some containing abundant oyster shells. Also limestone nodules. (4) Clay-saturated to nearly saturated sandstone, fine to coarse grained, mostly fine to medium grained, much tuffaceous, grading to sandy claystone, low to very low permeability. Some has moderately to well sorted sand, some poorly sorted. Grades to: (5) Mudstone (much sandy), siltstone, and shale (some carbonaceous). (6) Porcelaneous mudstone and shale. (7) One bed of compact, fine-grained white tuff of 97 percent clear glass shards (Huey, 1948). Also, many sandstone beds contain tuffaceous clasts and matrix material. (8) Lignite seams (Huey, 1948). (9) Punky, tuffaceous and diatomaceous shale (Huey, 1948).

Unit contains much of both sandstone, including conglomerate (compositions 1, 2, 3), and clayey rock (compositions 4, 5); probably about equally abundant. Of sandy rock, most is sandstone, some to much of which is pebbly; conglomerate is minor overall, locally some; cemented rock minor overall but commonly present. Of clayey rock, half or more is clayey sandstone, some is sandy mudstone to sandy claystone and siltstone, minor shale. Compositions 6-9 are minor. Sandstone dominant (two-thirds) in some sections to several hundred feet thick; clayey rock dominant in other sections.

Hardness: Sandstone is soft to firm where weathered, but commonly has case hardened firm to quite firm crust on outcrops; probably soft to firm where fresh. Conglomerate has soft to firm matrix and clasts that are mostly hard, some firm. Cemented sandstone and conglomerate hard to firm. Clayey rock firm where weathered and probably where fresh, except some soft when wet. Tuff firm; porcelaneous mudstone hard; compositions 8 and 9 firm; concretions and limestone nodules hard.

Bedding: Largely very thick distinct beds, ranging from 5 to more than 100 ft thick, most sandstone beds thicker than 10 ft. Some medium to 5-ft interbedding, largely distinct. Packets of less resistant rock to tens of feet thick. Much sandstone is internally bedded and crossbedded by changes in grain size or pebbly layers; shale is laminated. Outcropping sandstone beds as thick as 10 ft. Cemented beds as thick as 5 ft or more, probably as thick as 10 ft; concretions as large as thick by 8 ft. Limestone nodules to thick. Near Del Valle Reservoir, repetitively interbedded thick to 10-ft sandstone between medium interbeds of dark rock. Lignite seams to thick (2 ft).

Parting: Present on distinct bedding planes, largely at very wide (more than 5-ft) spacing, some at moderate to 5-ft spacing. Present within some sandstone at moderate to 4-ft spacing. Present in shale at very close spacing where weathered. Thus, largely very widely spaced.

Fracture: Spacing in sandstone ranges from close to 6 ft, largely moderate to 4 ft, most commonly wide, this fracture in many places perpendicular to bedding. Scaling at very close spacing in some tuffaceous or more clayey beds. Conglomerate at wide to 6-ft spacing. Clayey rock has moderate to 4-ft spacing of stained original fracture and very close to moderate spacing of weathering fracture, some of which is spheroidal on original fracture. Cemented beds have largely moderate to wide spacing, probably as wide as 5 ft. Some concretions as large as 3 ft by 8 ft are unfractured. Porcelaneous mudstone has very close spacing. Fracture in sandstone is distinct as in unit 400, contrasting with indistinct fracture in units 414 and 422.

Permeability: Intergranular permeability of sandstone and conglomerate (compositions 1, 2) mostly moderate, some low and high; clayey rock (compositions 4, 5) low to very low, much of each; calcite-cemented rock and porcelaneous rock very low; tuff and lignite low. Thus, much (nearly half) of bedrock has moderate intergranular permeability, most low to very low. Much mantle very low, much moderate.

Weathering: Clayey sandstone is fresh (blue-gray) at depths of 8-10 ft, whereas sandstone is weathered to more than 20-30 ft. Mudstone and shale host gypsum crystals to depth of 30 ft, although rock is fresh to within 10 ft of ground surface. Some mudstone or shale is fissile only at the very surface, remains blocky below ground surface. Plentiful free clay in weathered clayey rock.

Surficial mantle: Much clayey, much granular. On several traverses, two equally abundant soils. At sample localities AA1-AA4 and BHS25-BHS27, equally abundant uncracked sandy soil and dark sandy clay soil, such as sample AA2B. At sample localities AA11-AA14, equally abundant sand-clay soil, such as sample AA11A, and fluffy sandy clay soil,

such as sample AA12, as well as local more clayey soils. At sample localities MDW8 and MDW9, equally abundant light granular soil and dark clay soil, such as sample MDW8. Types of surficial mantle correspond with bedrock types and topography, granular mantle overlying clean materials and topographic highs.

Expansivity: Most bedrock is unexpansive, but some is severely expansive (sandy claystone, shale, and probably mudstone), and some may be significantly expansive (clayey sandstone). Much mantle severely expansive, much unexpansive to possibly significantly expansive. Bedrock samples: AA2A, moderately cracked sandy claystone, substantial constituent, free swell 100 percent; AA11B, mildly cracked shale, typical, free swell 92 percent. Surficial mantle samples: AA2B, mildly cracked sandy clay soil, typical, free swell 95 percent; AA11A, mildly cracked sand-clay soil, free swell 90 percent (exaggerated?); AA12, mildly cracked sandy clay soil, free swell 99 percent; MDW8, moderately cracked sandy clay soil, typical, free swell 119 percent; TJ5, mildly cracked dark-brown sandy clay soil, typical, free swell 100 percent (exaggerated). Expansivity appears more pronounced in some areas than in others.

Stratigraphic thickness: 200-2,000 ft (Brabb and others, 1971); 500 ft estimated maximum in Tesla 15' quadrangle, on eastern edge of map area (Huey, 1948); 2,000 ft near Del Valle Reservoir (Hall, 1958); 100-500 ft in Tesla 15' quadrangle, 1,900 ft in Pleasanton 15' quadrangle (Geological Society of Sacramento, 1959).

Sources: Brabb and others, 1971; Geological Society of Sacramento, 1959; Hall, 1958; Huey, 1948; 18 stations.

MAP UNIT 355

Geologic unit, (age), and location: Briones Sandstone (T), only in hills along east side of Santa Clara Valley from Fremont south past San Jose.

Summary: Largely sandstone: some is hard and calcite cemented, and crops out as reefs associated with shell breccia; some is dirty and clayey, weathers spheroidally, and grades to fine sandy mudstone; and most is uncemented, firm weathered sandstone. Minor conglomerate. Probably most mantle is significantly expansive, some severely expansive, some to much unexpansive.

Expression in aerial photographs: Largely bumpy resistant intermediate topography, locally hard topography. Most of unit underlies bumpy upland surface lacking ribs. Unit is largely unbanded or subtly banded; where banded, consists largely of light-toned bands between minor dark-toned bands, the light-toned bands mostly 20-100 ft in width, the dark-toned bands as wide as 20 ft. In places, cemented beds as wide as about 20 ft crop out in bands; in other places, largely light-toned bands but no outcrop, the bands as wide as 30 ft, some resistant zones as wide as 200 ft. In Mission Pass area, forms resistant ribbed intermediate topography. Much more resistant than adjacent units of Monterey Group.

Composition: Largely sandstone, ranging from cemented to clayey, lesser mudstone and conglomerate, as differentiated below. Sandstone is arkosic, generally well to moderately well sorted, largely medium grained, some coarse grained, but clayey sandstone is fine to medium grained. A typical sandstone consists of 25 percent quartz, 28 percent feldspar, 10 percent carbonate, and 37 percent lithics (Crittenden, 1951). The compositions distinguished are: (1) Sandstone, cemented by calcite, some conglomeratic containing shells and shell fragments (shell breccia), generally crops out. (2) Sandstone, fairly clean but enough fines (largely silt?) to produce low permeability and weathering fracture. Much of this may be partially calcite cemented where fresh, but weathers to firm rock. (3) Clay-saturated to nearly saturated dirty sandstone, weathers spheroidally. Grades to: (4) Fine sandy mudstone. (5) Conglomerate of pebbles and lesser cobbles in sandstone matrix, some or more of which is cemented; present at base in many places in Hayward 7.5' quadrangle (Robinson, 1956). (6) Porcelaneous shale. (7) Concretions, calcite cemented, within dirty sandstone. Unit is largely composition 2, but some (less than one-third at surface and near surface) cemented rock (composition 1) and some clayey rock (compositions 3, 4). Minor amounts locally of compositions 5-7.

Hardness: Cemented rock hard, generally to outcrop, but some rock that is cemented where fresh weathers firm to hard. Most sandstone is firm to quite firm where weathered; most is probably quite firm where fresh, but we don't know how much fresh sandstone is cemented. Clayey sandstone is firm to soft where weathered, mudstone firm where fresh and weathered. Conglomerate where observed is hard; porcelaneous shale hard; concretions hard. Thus, sandstone of unit is hard where it crops out, largely firm to quite firm, some hard, where no outcrop.

Bedding: Cemented sandstone crops out in prominent thick to very thick (as much as 15-ft) beds on hillsides. The cemented sandstone occurs in thin to very thick, largely very thick (3- to 15-ft), distinct beds between very thin to very thick intervals of other compositions and occurs both as isolated beds and in intervals of dominant to nearly entirely cemented sandstone as thick as 60 ft or more. Dirty and clayey sandstones are distinctly to indistinctly bedded at thin to thick and occur in intervals as thick as 40 ft or more. Conglomerate in beds to very thick (4 ft); mudstone in intervals to 25 ft thick. Shell breccia as thick as 8 ft. In some good exposures of sandstone, little bedding was seen, and so most sandstone (composition 2) probably is very thick bedded (tens of feet) or indistinctly bedded. Concretions to medium.

Parting: Present at boundaries of cemented beds and on other distinct bedding, but not a common feature of this unit. Cemented beds are largely unparted, but some cemented rock shows parting at close to moderate spacing.

Fracture: Cemented sandstone generally has moderate to wide spacing, some to 8 ft, in places having abundant spacing greater than 4 ft. Uncemented sandstone has moderate to 5-ft original spacing, but much has close to moderate spacing of weathering fracture, typically producing medium blocks. Clayey sandstone has very close to moderate spacing of weathering fracture on moderate to wide original spacing. Mudstone has close to very close spacing of weathering fracture. Conglomerate has moderate to 4-ft spacing where cemented.

Permeability: Sandstone (most of unit) has mostly low intergranular permeability, very low where calcite cemented, but weathered cemented sandstone may have moderate intergranular permeability. Much of the low permeability sandstone must approach moderate permeability, probably with significant help from fractures in shallow rock, because unit is most important bedrock aquifer in region, contributing to many large springs, especially at contact with unit 523 (Crittenden, 1951). Mudstone has very low to low intergranular permeability, conglomerate and clayey sandstone low, porcelaneous shale very low. Most mantle moderate, some very low to low.

Weathering: Much cemented sandstone fresh to outcrop, but in a number of places this rock is weathered, from fractures inward, to depths greater than 10 ft. Dirty and clayey sandstones show spheroidal weathering to depths greater than 15 ft.

Surficial mantle: Largely granular, some clayey. Unit has a consistent uncracked to mildly cracked sandy soil, sampled at locality CVR4. At sample localities CVR20-21, 80 percent of soil is similar to sample CVR4, 20 percent is a mildly to locally moderately cracked sandy clay soil, such as sample CVR21.

Expansivity: Most bedrock unexpansive, probably some significantly expansive (clayey rock). Probably most mantle significantly expansive, some severely expansive, some to much unexpansive. Samples: CVR4, typical light-brown uncracked to mildly cracked sandy clayey silt soil, free swell 87 percent (probably exaggerated); CVR21, mildly cracked sandy clay soil, free swell 80 percent.

Stratigraphic thickness: 1,650-5,000 ft (Crittenden, 1951); 500-1,500 ft in Hayward 7.5' quadrangle (Robinson, 1956).

Sources: Crittenden, 1951; Gilbert, 1943; Robinson, 1956; Templeton, 1912; 11 stations.

MAP UNIT 356

Geologic units, (age), and location: Briones Sandstone, undivided (T); Briones Sandstone, upper part (T); only in the East Bay Hills between Dublin and Upper San Leandro Reservoir.

Summary: Not seen in field. Probably like unit 355 but includes more clayey rock. Largely sandstone: some is hard and calcite cemented, and crops out as reefs associated with shell breccia; some to much is dirty and clayey, weathers spheroidally, and grades to fine sandy mudstone; and much is uncemented firm weathered sandstone. Much bedrock and mantle may be expansive.

Expression in aerial photographs: Prominently banded, resistant unit with respect to Monterey Group, showing strong topographic contrast across tonal bands. Unit forms resistant intermediate to hard topography, much of each; hard topography occurs where abundant light-toned bands provide sharp crests. Unit occupies only really resistant terrain and lacks soft zones near boundaries. Distinctly banded by light- and dark-toned bands 5-100 ft in width, resistant bands as wide as 100 ft. Most of unit shows 60 percent light-toned bands and 40 percent dark-toned bands, but these become equally abundant to north.

Composition: Largely sandstone, ranging from cemented to clayey, lesser mudstone and conglomerate. Compositions are as described for unit 355. Probably much of unit is somewhat dirty sandstone (composition 2), some (less than one-third at surface and near surface) is cemented rock (composition 1), and some to much is clayey rock (compositions 3, 4). Minor amounts locally of conglomerate and concretions (compositions 5, 7).

Hardness: As described for unit 355.

Bedding: As described for unit 355. Many sandstone beds are thick to 4 ft (Robinson, 1956). See "Expression in aerial photographs."

Parting: As described for unit 355.

Fracture: As described for unit 355.

Permeability: Much bedrock (sandstone) probably has low approaching moderate intergranular permeability, some to much (clayey rock and cemented rock) very low to low. Some shallow rock has moderate total permeability, probably most of remainder has low fracture permeability. See unit 355. Probably much to most mantle moderate, much low to very low.

Weathering: As described for unit 355.

Surficial mantle: Probably much to most granular, much clayey, as judged from expression in aerial photographs.

Expansivity: Most bedrock unexpansive, probably some to much expansive (clayey rock). Probably most mantle significantly expansive to unexpansive, but much may be severely expansive. See samples for unit 355.

Stratigraphic thickness: 500-1,500 ft (Robinson, 1956).

Source: Robinson, 1956.

MAP UNIT 357

Geologic unit, (age), and location: Briones Sandstone (T), only in Pacheco syncline, west of Concord.

Summary: Clean sandstone, scaly sandstone, and mudstone interbedded in very thick beds (tens of feet). Hard shell beds to thick in places. Much to most mantle is significantly expansive.

Expression in aerial photographs: Low-lying, soft topography containing some hills of intermediate topography. Includes some elongate hills parallel to strike, and tonal bands in nose of syncline. Bands, where present, are subdued; light-toned bands generally are 20-50 ft wide, dark-tones bands as wide as 200 ft. To south, some isolated light-toned hills of resistant intermediate topography. Generally looks similar to unit 368, but slightly more resistant.

Composition: Sandstone interbedded with mudstone, shale, siltstone, and clayey or tuffaceous fine-grained to very fine grained sandstone. Along Santa Fe railroad, sandstone is medium-grained, some to coarse-grained, well-sorted lithic sandstone of moderate permeability that contains tuffaceous grains, some tuffaceous matrix and stringers of dominantly tuffaceous grains, and several shell beds and pebble stringers. This sandstone is interbedded with tuffaceous and clayey fine-grained to very fine grained sandstone. Along Industrial Highway and presumably farther south, sandstone is fine to medium grained, well to moderately well sorted, some scaly, low permeability. This is interbedded with fine sandy and silty shale, mudstone, and clayey siltstone, and also with fine-grained to very fine grained tuffaceous sandstone and siltstone. Minor conglomerate and pebbly zones. Unit is largely sandstone, some mudstone and clayey fine sandstone.

Hardness: Largely firm where fresh and weathered. Some fine-grained tuffaceous sandstone is brittle and quite firm. Concretions and some shell beds cemented hard, but some shell beds firm.

Bedding: Sandstone in distinct very thick beds, generally tens of feet thick, between mostly very thick (5- to 25-ft) mudstone or clayey sandstone interbeds. Some intervals of thin to very thick (4-ft) interbedding. In much of sandstone the only evidence of bedding is tuffaceous stringers or shell beds. Shell beds are medium to thick; concretions to medium. See section by Weaver (1953).

Parting: At bedding contacts, mostly at very wide spacing (tens of feet), in places at close to wide. In places at close to very close spacing in shale.

Fracture: Sandstone has close to moderate spacing, but in some places much of close fracture is induced by weathering. Interbedded mudstone and matrix-saturated sandstone have close to very close spacing, some to moderate. Much sandstone scales where weathered, and much fine-grained matrix-saturated sandstone weathers spheroidally, as does some mudstone. Shell beds have spacing as wide as 4 ft.

Permeability: Intergranular permeability largely low, minor moderate, in sandstone, but to north (along Santa Fe tracks) sandstone has mostly moderate intergranular permeability, about 30 percent low and about 10 percent high. Some very low intergranular permeability (in mudstone and matrix-saturated fine sandstone). Thus, much to most bedrock has low intergranular permeability, some very low, minor to some moderate to locally high. Probably most mantle low to very low, some moderate.

Weathering: Sandstone generally weathered to depths of more than 15 ft, clayey rock to depth of about 10 ft.

Surficial mantle: Probably largely clayey, some granular. Most is sandy clay.

Expansivity: Most bedrock is unexpansive, probably some expansive (clayey rock). Much to most mantle significantly expansive, some to much unexpansive. Samples: PC4, typical sandy clay soil, free swell 56 percent (exaggerated); WC23, typical sandy clay soil, free swell 64 percent.

Stratigraphic thickness: About 700 ft.

Sources: Weaver, 1953; three stations.

MAP UNIT 358

Geologic unit, (age), and location: Briones(?) Sandstone (T), near Vallejo.

Summary: Not seen in field. Probably like unit 357, interbedded clean sandstone, dirty sandstone, and mudstone.

Sources: Sims and others, 1973; Weaver, 1949.

MAP UNIT 359

Geologic unit, (age), and location: Briones Sandstone (T), only in the East Bay Hills near San Ramon.

Summary: Briefly seen in field. Largely sandstone, probably some clayey rock. Described differently by Ham (1952) and Newton (1948); not actually mapped by Ham (1952), but his upper, middle, and lower members appear continuous with those of source map.

Expression in aerial photographs: Includes both resistant high topography and lower more subdued topography; much of the latter looks like apron of landslides. Mostly intermediate topography. Upper member is resistant and has uniform light tone; much is finely ribbed. Middle member is largely intermediate in tone, shows intermediate crests, and contains one light-toned resistant band 200 ft in width. Lower member is largely subdued soft to intermediate topography, but includes some steep, irregularly ribbed hillslopes.

Composition: Newton (1948) described unit as largely coarse- to fine-grained arkosic sandstone, "well washed," including grit and pebble beds, "massive or heavily bedded." Ham (1952) described components as follows: Lower member—massive tuffaceous graywacke, beds as thick as 75 ft. Graywacke consists of angular, poorly sorted, medium- to coarse-grained feldspar and lithics. Thin shale partings and concretions in some beds. Also platy graywacke beds, medium in thickness. Middle member—coarse-grained, poorly sorted graywacke, much cemented by calcite. Consists of zones of pebbly shell breccia as thick as 10 ft between 30- to 40-ft massive interbeds. Upper member—incompetent unit, moderately fossiliferous, including 5- to 7-ft beds of micaceous fine-grained sandstone rhythmically interbedded with 2-ft beds of arenaceous shale. Concretions at base, slightly pebbly near upper contact.

Permeability: Prohably like unit 355.

Surficial mantle: Probably largely granular, some clayey. Sample D22 suggests clayey bedrock.

Expansivity: Probably most bedrock unexpansive, some expansive (clayey rock). Probably most mantle unexpansive to significantly expansive, some probably severely expansive. Sample D22, well-cracked dark sandy silty clay soil, free swell 70 percent.

Sources: Ham, 1952; Newton, 1948; one station.

MAP UNIT 360

Geologic unit, (age), and location: Briones Sandstone, E member of Wagner (1978) (T), only south of Livermore Valley near Sunol Valley and Pleasanton.

Summary: Largely firm, low permeability sandstone interbedded in thin to very thick beds with lesser clay-saturated sandstone, mudstone, and shale, but typically includes 30-40 percent hard calcite-cemented shell-breccia sandstone in 10- to 30-ft beds that crop out prominently as towering crags, fractured largely at wide to 5 ft. Some to much conglomerate near Pleasanton. Some severely expansive clayey mantle.

Expression in aerial photographs: Forms sharp ridges, hogbacks, and peaks. Cemented beds stand out in bold relief. Hard to intermediate topography; much has sharp crests or hogbacks, most shows ribbing. Includes prominent light-toned resistant bands as wide as 30 ft and less resistant dark-toned bands 10-100 ft in width.

Composition: Includes: (1) Shell-breccia sandstone, largely gritty sandstone, cemented by calcite, much containing shell fragments and pebbles, some conglomerate interbedded. Some beds are largely fossils. (2) Fine- to medium-grained sandstone of well-sorted to moderately well sorted sand, low permeability, not cemented, some to most having weathering fracture. (3) Clay-saturated fine- to medium-grained sandstone. (4) Mudstone, somewhat siliceous(?), some has parting sufficient for shale. (5) Conglomerate and lesser clay-saturated sandstone interbeds. Conglomerate is poorly sorted and consists largely of pebbles, but contains some cobbles as much as 6 in. in diameter, in poorly sorted matrix of clayey and silty sandstone.

Unit is largely composition 2, but includes some interbedded compositions 3 and 4; composition I generally forms 30-40 percent of unit, largely within a single 250-ft interval. Each of compositions 1-5 is dominant locally. Conglomerate (composition 5) is abundant near Pleasanton where it constitutes as much as 70 percent of large exposures.

Hardness: Shell-breccia sandstone is hard to outcrop or ground surface; sandstone of composition 2 firm where fresh, firm to soft where weathered; clayey sandstone firm where fresh and weathered; mudstone pieces quite firm where weathered. Conglomerate matrix and interbedded clayey sandstone are firm to soft where weathered.

Bedding: Shell-breccia sandstone occurs in distinct thick to very thick (as much as 30-ft) beds, many 10-30 ft, the very thick beds largely within a 250-ft interval; thick to 4-ft beds present in other parts of section. From a distance, some outcropping beds appear lenticular and as thick as 100 ft. Sandstone of composition 2 occurs in distinct thin to medium and very thick (10- to 20-ft) beds and also in intervals as thick as 50 ft or more. Clayey sandstone and mudstone (compositions 3 and 4) have unknown bedding character and occur in intervals as thick as 50 ft or more. Conglomerate occurs in distinct beds as thick as 15 ft between thinner(?) beds of clayey sandstone.

Parting: Present at shell-breccia bedding planes (wide to 30 ft); in firm sandstone (composition 2) on distinct bedding planes (some close to moderate spacing, some very wide) and within some very thick beds at moderate to wide spacing; within most (70 percent) of mudstone at close to moderate spacing, in some (30 percent) at very close (shale). Absent in conglomerate and interbedded sandstone.

Fracture: In shell-breccia sandstone, spacing ranges from moderate to 10 ft, mostly wide to 5 ft, locally as much as 20 ft. Firm sandstone has moderate to wide original spacing and some superimposed close to moderate spacing of weathering fracture; mudstone has close to moderate original spacing and close to very close spacing of weathering fracture. In conglomerate at wide to very wide spacing.

Permeability: Shell-breccia sandstone has largely very low intergranular permeability, but may have low fracture permeability in shallow rock; compositions 2, 3, and 5 have low intergranular permeability, composition 4 very low. Thus, most bedrock has low intergranular permeability; some to much has very low intergranular permeability, but may have low fracture permeability in shallow rock. Most mantle moderate, some low to very low.

Weathering: Shell-breccia sandstone unweathered to outcrop. Firm sandstone and mudstone weathered to depths greater than 10-15 ft, some mudstone developing spheroidal weathering on original fractures. Conglomerate weathered to depths greater than 30 ft.

Surficial mantle: Largely granular, some clayey.

Expansivity: Most bedrock unexpansive, possibly some expansive (weathered clayey rock). Most mantle unexpansive to significantly expansive, some severely expansive. Surficial mantle samples: LCV8, black loam soil, typical, free swell 57 percent; LCV13, mildly cracked silty and sandy clay soil, free swell 88 percent; DU3, mildly cracked sandy silty soil, free swell 46 percent.

Stratigraphic thickness: About 2,500 ft (Hall, 1958).

Sources: Hall, 1958; five stations.

MAP UNIT 361

Geologic unit, (age), and location: Briones Sandstone, lower part (T), only south of Livermore Valley near Sunol Valley.

Summary: Largely sandstone of low approaching moderate permeability; lesser interbedded clay-saturated sandstone, mudstone, and shale; and minor hard shell-breccia sandstone beds to more than 5 ft thick. Some to much mantle and at least minor bedrock are severely expansive.

Expression in aerial photographs: Unbanded to very subtly banded smooth-textured slopes that have broad rounded ribs. Some swale-forming soft areas.

Composition: (1) Sandstone, fine- to coarse-grained lithic arkosic wacke (Hall, 1958), mostly medium grained, locally carbonaceous (Hall, 1958), well sorted having minor clay content (less than 5 percent), some clean (no clay). (2) Clay-saturated to nearly saturated sandstone, behaves as mudstone. (3) Mudstone and minor shale, some subporcelaneous. (4) Shell-breccia sandstone, calcite cemented, medium to very coarse grained. Unit is largely sandstone (composition 1), but has some to much clay-saturated sandstone and mudstone, and minor shell-breccia sandstone and shale.

Hardness: Sandstone (composition 1), clayey sandstone, mudstone, and shale are firm to soft where weathered, commonly friable (Hall, 1958). Shell-breccia sandstone is firm to hard where weathered. Subporcelaneous rock quite firm.

Bedding: Sandstone (composition 1), clay-saturated sandstone (composition 2), and mudstone occur both in distinct very thick (10- to 50-ft) beds and intervals and in distinct medium to 4-ft sandstone beds between thin to thick intervals of mudstone to clayey or laminated sandstone. Some clayey sandstone has thin to medium distinct interbeds of cleaner sandstone. Shell-breccia sandstone in beds to very thick (5 ft or more). Some crossbedding in sandstone (Hall, 1958).

Parting: At distinct bedding planes, both at close to wide and at very wide (10 ft or more); some clayey sandstone has close to moderate spacing along interbedded cleaner sandstone, other is unparted; most mudstone has spacing at very close to moderate; shale parts at very close spacing.

Fracture: Sandstone (composition 1) has moderate to close spacing, some of which is weathering fracture; clayey sandstone, mudstone, and shale have close to very close spacing of weathering fracture on moderate to wide original spacing; shell-breccia sandstone has wide and less abundant very wide spacing.

Permeability: Sandstone (composition 1) has low to moderate intergranular permeability in weathered rock, where minor clay content appears sufficient to reduce inherent moderate permeability of some sandstone to low. Because the clay is probably related to weathering, most fresh sandstone probably has moderate intergranular permeability. Clay-saturated sandstone and shell-breccia sandstone have low to very low intergranular permeability, mudstone and shale very low. Thus, most shallow bedrock has low to moderate intergranular permeability; some has very low intergranular permeability, but some of this has low fracture permeability. Most bedrock below shallow rock probably has moderate intergranular permeability, some low, some very low. Probably most mantle moderate, some to much very low.

Weathering: Sandstone (composition 1) weathered to depths greater than 15 ft; shell-breccia sandstone to depths greater than 5 ft. Spheroidal weathering in clayey sandstone to depths greater than 10 ft.

Surficial mantle: Probably largely granular, some to much clayey. Little observation owing to nature of exposure.

Expansivity: Most bedrock unexpansive but some to much expansive, at least minor severely expansive (shale). Probably most mantle unexpansive, some to much severely expansive. Samples: LCV9A, typical shale, minor constituent, free swell 160 percent; LCV10, moderately cracked dark clay soil, substantial constituent, free swell 102 percent; LCV9B, clayey soil, free swell 110 percent.

Stratigraphic thickness: About 1,500 ft (Hall, 1958).

Sources: Hall, 1958; four stations.

MAP UNIT 362

Geologic unit, (age), and location: Briones Sandstone, lower part (T), only in area south of Livermore Valley near San Antonio Reservoir.

Summary: Briefly seen in field. Largely sandstone, probably some clayey rock and minor conglomerate. Largely firm, but conglomerate and cemented sandstone beds are hard. Some severely expansive mantle.

Expression in aerial photographs: Ribbed intermediate to hard topography; some to much is hard.

Composition: Unit was mapped by Hall (1958) as "anomalous" Briones Sandstone, Cierbo Sandstone, and Neroly Sandstone. Includes: (1) Medium-grained to very coarse grained sandstone, including calcite-cemented shell-breccia sandstone. (2) Sandstone of coarse shell and serpentine fragments, called serpentine arenite by Hall (1958). (3) Conglomerate of chert and basalt pebbles, well indurated (Hall, 1958). (4) Sandstone, very friable, to coarse grained, some having blue clay coatings (Hall, 1958; see unit 400). (5) Probably mudstone and clayey sandstone as in unit 361. Proportions are unknown, probably some each of compositions 1, 2, 4, and 5, and minor composition 3.

Hardness: Largely firm (similar to units 354 and 361), but conglomerate and cemented sandstone beds hard to outcrop.

Bedding: Largely unknown. Assume largely similar to units 354 and 361. Conglomerate bed 3-10 ft thick; cemented sandstone beds as thick as 4 ft.

Parting: Assume similar to units 354 and 361.

Fracture: Largely unknown. Assume similar to units 354 and 361, except spacing in cemented sandstone wide to 4 ft, uncemented sandstone moderate to 4 ft, conglomerate probably very wide.

Permeability: Bedrock unknown, probably some very low intergranular permeability, much low, much moderate, minor to some high. Probably most mantle moderate, some low to very low.

Weathering: Unknown, assume similar to units 354 and 361.

Surficial mantle: Probably largely granular, some clayey. Dark sandy clay soil like sample LCV11 covers some of unit.

Expansivity: Most bedrock unexpansive, probably some expansive (clayey rock). Probably most mantle unexpansive, some severely expansive. Sample LCV11, dark sandy clay soil, free swell 85 percent.

Sources: Hall, 1958; one station.

MAP UNIT 363

Geologic unit, (age), and location: Unnamed sandstone (T), only in Santa Clara County near Palo Alto.

Summary: Fine-grained silty sandstone, including minor hard calcite-cemented shell beds and some clayey rock.

Composition: Fine-grained, well-sorted sandstone, including minor medium-grained fossiliferous sandstone and shell breccia near base. Matrix material is silt. These compositions were the only ones at the two roadcuts examined, but siltstone encountered in boring at sample locality PA38. Calcite cementation is associated with shell beds. Unit is largely sandstone, minor cemented; probably some siltstone and clayey fine-grained sandstone.

Hardness: Soft to firm, locally hard where calcite cemented.

Bedding: Where observed, sandstone lacks bedding except for shell beds, which are 1-4 ft thick. Bedding may be visible in fresh rock, as in San Mateo County (unit 380).

Parting: In some of unit at moderate to wide spacing.

Fracture: Spacing ranges from close to very wide, largely moderate to wide in weathered rock. Some of unit has weathering fracture at very close to close spacing.

Permeability: Intergranular permeability of bedrock largely low, probably some moderate, probably some very low. Probably most mantle moderate, some low to very low.

Weathering: Weathered to buff color to depths greater than 15 ft.

Surficial mantle: Probably largely granular, some clayey.

Expansivity: Most bedrock unexpansive, minor to some severely expansive (siltstone). Probably most mantle unexpansive to significantly expansive, some severely expansive. Samples: PA38, siltstone, free swell 153 percent; PA55, sandy clay soil, free swell 66 percent.

Sources: Dibblee, 1966; Pampeyan, 1970; two stations.

MAP UNIT 364

Geologic unit, (age), and location: Hambre Sandstone (T) of the Monterey Group, only in the East Bay Hills, excluding areas east of Fremont and northeast of Castro Valley.

Summary: Largely fine-grained to very fine grained sandstone, clean to dirty, and much siltstone, silty mudstone, silty shale, and very fine sandy siltstone. Also includes as much as 10 percent hard, brittle, calcite-cemented fine sandstone and siltstone and hard calcite-cemented concretions. Possibly some blasting necessary in unusually resistant beds (Radbruch and Case, 1967). Most mantle is severely expansive.

Expression in aerial photographs: Mostly intermediate topography, some hard. Mostly shows only hints of tonal bands, but in places, especially

north of Pinole Valley Road and Alhambra Valley Road, shows distinct banding of light-toned resistant intervals 100-200 ft in width between dark-toned nonresistant intervals 100-300 ft in width; also some light- and dark-toned intervals of several tens of feet. Unit is disrupted to north near Interstate 80.

Composition: Largely fine-grained to very fine grained, some medium-grained, sandstone, probably tuffaceous. Varies from resistant sandstone that is clean and well-sorted to moderately well sorted, to dirty and clayey sandstone that scales where weathered. Some pebbly. Also includes much siltstone, silty mudstone, silty shale, and very fine sandy siltstone, grading to dirty fine sandstone. Shale and locally some siltstone to dirty very fine grained sandstone are fissile, but generally the rock is not fissile. In the good exposures studied, resistant sandstone occupies the upper one-third to one-half of section, whereas the lower two-thirds to one-half is largely siltstone, silty mudstone, and dirty fine sandstone. Unit also includes 10 percent hard, brittle, calcite-cemented fine sandstone and siltstone and hard calcite-cemented concretions as large as 5-ft spheres. Also minor (and possibly mismapped) firm diatomite and diatomaceous siltstone. Radbruch and Case (1967) emphasized the clayey nature of this unit and distinguished the body east of El Sobrante as being less clayey than the remainder of unit.

Hardness: All compositions are firm where weathered, probably firm where fresh, except calcite-cemented sandstone, siltstone, and concretions are hard. Some clean sandstone is quite firm, approaching hard.

Bedding: In outcrop generally appears unbedded, but in places distinct to indistinct, thick to more than 20-ft beds of sandstone are interbedded with siltstone and silty mudstone. Distinct medium to 4-ft beds of hard calcite-cemented sandstone. Radbruch and Case (1967) reported 2- to 10-ft firm resistant sandstone beds.

Parting: Mostly absent. Present in some sandstone at wide to 4 ft, on some contacts between sandstone and siltstone at wide to more than 20 ft, and within shale, fissile siltstone, and fissile very fine grained sandstone at close to very close. In places this fissile rock constitutes as much as one-fourth of section.

Fracture: Sandstone has close to wide, mostly moderate to wide, spacing of original iron-stained fracture. Generally a weathering fracture at very close to moderate spacing, largely close to moderate, is superimposed on the original fracture, but some clean sandstone does not develop weathering fracture. Much dirty sandstone develops spheroidal weathering on the original fracture. Siltstone and dirty very fine sandstone generally have moderate spacing of original fracture and superimposed close to very close spacing of weathering fracture. Mudstone and shale have close to very close spacing of weathering fracture. Hard sandstone and siltstone have mostly close to moderate spacing, some wide; concretions are fractured at moderate to wide.

Permeability: Intergranular permeability of sandstone low, mudstone and siltstone low to very low, except possibly some sandstone moderate below shallow rock. Thus, most bedrock low, some very low, possibly some moderate below shallow rock. Most mantle very low.

Weathering: In all exposures to greater than depth of cut (more than 15 ft), but some problematical brown-gray coloration at depth of 4 ft in places.

Surficial mantle: Largely clayey. Radbruch and Case (1967) reported a generally expansive clayey soil, 2-5 ft thick.

Expansivity: Probably much bedrock expansive. Most mantle severely expansive. Samples: MI1, moderately cracked fine sandy clay soil, free swell 105 percent; MI3, well-cracked sandy clay soil, free swell 101 percent; BV8, well-cracked dark clay soil, free swell 118 percent; BV9, mildly cracked dark silty clay soil, free swell 81 percent; at BV16, mildly cracked clayey soil, free swell 87 percent, occurs with uncracked sandy soil. All samples typical. Cracking noted also in weathered bedrock.

Stratigraphic thickness: Maximum thickness of 3,000 ft (Pease, 1954, quoted by Radbruch and Case, 1967). Thins to 500 ft on Crow Canyon Road (Newton, 1948).

Sources: Lawson, 1914; Newton, 1948; Pease, 1954; Radbruch, 1969; Radbruch and Case, 1967; Sheehan, 1956; eight stations.

MAP UNIT 365

Geologic unit, (age), and location: Sandstone and mudstone near Fort Ross (T), near Sonoma County coast.

Summary: Like unit 378, except (1) lacks conglomerate, and (2) some mudstone is somewhat fissile, hence parting in some at close to very close spacing.

Sources: Blake and others, 1971; Wentworth, 1966; two stations.

MAP UNIT 366

Geologic unit, (age), and location: Temblor Sandstone (T), only northeast of San Jose near north end of Calaveras Reservoir.

Summary: Largely sandstone in beds as thick as 10 ft; some pebble conglomerate in beds as thick as 2 ft, and probably some clayey rock. Bedrock is firm, in places approaching hard; largely close to moderate fracture spacing; low intergranular permeability. Most bedrock and mantle is unexpansive.

Expression in aerial photographs: Includes both intermediate and hard topography; some is banded at 10-30 ft, light and dark tones about equally abundant. Includes both resistant and prominently nonresistant areas that suggest some clayey rock.

Composition: (1) Sandstone, fine to coarse grained, probably largely fine to medium grained, fairly well sorted, clean but low intergranular permeability; very fossiliferous, containing abundant leaves and stems largely in finer grained beds. (2) Conglomerate of rounded pebbles as much as 2 in. in diameter, largely chert, in coarse-grained fossiliferous sandstone matrix. (3) Siliceous shale. Unit is largely sandstone, some conglomerate and probably some clayey rock, minor siliceous shale.

Hardness: Sandstone and conglomerate are firm where fresh and weathered, locally approaching hard. Templeton (1912) described rock as moderately hard. Siliceous shale hard.

Bedding: Distinct interbedding of sandstone and conglomerate, sandstone in beds to very thick (10 ft), conglomerate in lenticular beds to thick. Siliceous shale to thick, distinct. Geological Society of Sacramento (1959) described sandstone as massive, so much must be very thick bedded.

Parting: Most lacks parting on bedding planes, but some to nearly half has parting along bedding planes, much at moderate to wide.

Fracture: Close to moderate spacing in sandstone and conglomerate, and close weathering fracture in some beds; in places close to very close spacing (near faults?).

Permeability: Low intergranular permeability in sandstone and conglomerate, very low in siliceous shale and probably in most clayey rock; low fracture permeability in shallow siliceous shale and probably in much shallow clayey rock. Thus, largely low intergranular permeability in bedrock; minor to some very low, but this probably has low fracture permeability in shallow rock. Most mantle moderate, some low to very low.

Weathering: Most of exposure is weathered to buff color.

Surficial mantle: Largely granular, some clayey.

Expansivity: Bedrock and mantle largely unexpansive, some mantle significantly expansive. Sample CVR40, sandy silty clay soil, free swell 53 percent.

Sources: Crittenden, 1951; Geological Society of Sacramento, 1959; Templeton, 1912; one station.

MAP UNIT 367

Geologic unit, (age), and location: San Ramon Sandstone (T), only in southern Napa Range near Carneros Creek.

Summary: Not seen in field. Medium- to fine-grained sandstone, probably firm, massive; probably some clayey rock. See units 368 and 409.

Composition: According to Weaver (1949) and Clark (1918), rock is uniformly medium- to fine-grained sandstone, in places pebbly or slightly shaly, blue gray to light brown. Thus, unit is probably largely sandstone, some clayey rock.

Hardness: Probably firm.

Bedding: Unknown. Not mentioned in literature, probably very thick indistinct beds.

Parting: Unknown. Probably rare.

Permeability: Probably largely low intergranular permeability in bedrock, some very low, possibly some moderate. Probably most mantle low to very low.

Weathering: Unknown depth, weathers light brown.

Surficial mantle: Probably largely clayey.

Expansivity: Probably most bedrock unexpansive, some may be expansive. Probably most mantle expansive, some severely expansive. See samples for units 368 and 409.

Stratigraphic thickness: Exposed part of unit about 300 ft (Weaver, 1949).

Sources: Clark, 1918; Fox and others, 1973; Weaver, 1949.

MAP UNIT 368

Geologic units, (age), and location: Sobrante Sandstone (T) of the Monterey Group, and San Ramon Sandstone (T); in Pacheco syncline, west of Concord.

Summary: Largely Sobrante Sandstone, but includes a band of San Ramon Sandstone 130-200 ft in stratigraphic thickness along contact with unit 436. These geologic units are described separately below. For the combined map unit, most bedrock is unexpansive, some expansive (mudstone); most mantle is expansive (some to much of this severely expansive), some unexpansive. Bedrock has some moderate to high intergranular permeability, much low, some very low; most mantle very low to low, some moderate. Mantle is largely clayey, some granular.

Sobrante Sandstone

Summary: Two main lithologic sequences, much of each. One is a fine-grained to very coarse grained sandstone that contains pebble stringers and some tuffaceous matrix, much clean, much dirty. The other sequence consists of clayey and tuffaceous fine-grained sandstone interbedded with mudstone and clean fine sandstone. All rock can be ripped, some difficult trenching. Some bedrock and most mantle is expansive.

Expression in aerial photographs: Low-lying, nonresistant topography. Occupies the most pronounced lows and drainages in area, but largely consists of low rolling topography that has some elongate light-toned hills and some low ridges in neutral low topography. Where section is revealing, a 200-ft dark-toned nonresistant band is followed by a 100-ft light-toned resistant band and a 200-ft dark-toned resistant band. Generally similar to unit 357; most soft, some intermediate topography.

Composition: Composition 1 occurs near base of unit and less consistently near top of unit. It is dominantly lithic sandstone, ranging from fine to very coarse grained, well to moderately sorted, containing tuffaceous clasts (pumice); some contains tuffaceous matrix that is locally sufficiently abundant to call the rock a tuff. Some parts are clean and moderately to highly permeable; some parts less clean, low permeability. Includes beds and stringers of pebbles, as well as conglomerate that contains hard clasts as much as 6 in., but mostly less than 2 in., in diameter. Interbedded are very thick beds of clayey or tuffaceous sandstone. Also includes shell beds and concretions.

Composition 2 consists of clayey and tuffaceous fine-grained sandstone interbedded with mudstone and with relatively clean fine sandstone. This composition underlies most areas of gentle, low-lying topography.

Hardness: Composition 1 largely firm, including some quite firm and tough material and some clean sandstone that weathers firm to soft. Concretions, some shell beds, and some conglomerate hard. Composition 2 largely firm, some hard tuffaceous sandstone. Crushed rock, quarried from some very thick beds, is substantially less wear resistant than Franciscan sandstone (unit 700) or unit 233 (Davis and Vernon, 1951; Davis and Goldman, 1958).

Bedding: Composition 1 has very thick (several tens of feet or more) beds of sandstone between less abundant very thick interbeds. Sandstone is largely internally unbedded except for pebble trains, beds of conglomerate to thick, stringers of highly tuffaceous sandstone, and medium to thick shell beds, all of which do not produce parting. Hard shell beds, conglomerate, and concretions are medium to thick. Minor thin to very thick (4-ft) distinctly bedded sandstone. Composition 2 is distinctly to indistinctly bedded in medium to very thick (as much as 50-ft) beds. See section by Lutz (1951).

Parting: Absent in composition 1 except at bedding planes that are very widely spaced (tens of feet). In composition 2, parting largely on bedding planes at very wide spacing (5-50 ft), but some material has parting at close to moderate spacing.

Fracture: In composition 1, moderate to wide spacing, some to very wide (5 ft), in sandstone; close to moderate spacing of weathering fracture on moderate to wide original spacing in clayey and tuffaceous interbeds. In composition 2, coarser grained sandstone has close to moderate spacing of weathering fracture that is commonly superimposed on moderate to wide original spacing; finer grained materials have close to very close spacing of weathering fracture that is commonly superimposed on close to moderate original spacing.

Permeability: Much sandstone of composition 1 has low intergranular permeability, much moderate to high; interbeds low to very low. Composition 2 has largely low to very low intergranular permeability, much of each, and some moderate intergranular permeability. Most mantle very low to low, some moderate.

Weathering: In composition 1, sandstone is weathered from depths of 15-20 ft to much deeper in clean sandstone. Composition 2 generally weathered to depths greater than 10-15 ft.

Surficial mantle: Largely clayey, some granular. Two main types: a sandy clay soil that is dominant except on hilltops and slopes down from hilltops, such as samples WC21, WC12, and WC29; and a granular soil, such as sample WC30.

Expansivity: Most bedrock is unexpansive, some expansive (mudstone). Most mantle expansive, some to much of this severely expansive, some unexpansive. Samples: WC26, mudstone, mildly cracked surface, free swell 80 percent; WC21, typical black sandy clay soil, free swell 81 percent; WC12, black sandy clay subsoil on sandstone, mildly cracked, typical, free swell 100 percent (exaggerated); WC29, mildly cracked sandy clay soil, free swell 83 percent; WC30, sandy silty soil, free swell 50 percent.

Stratigraphic thickness: About 670 ft.

Sources: Davis and Vernon, 1951; Davis and Goldman, 1958; Lutz, 1951; Weaver, 1953; 12 stations.

San Ramon Sandstone

Summary: Firm sandstone, dirty to clean. All can be ripped, some oversize blocks. Most mantle significantly expansive.

Expression in aerial photographs: Generally forms light-toned resistant ridge, but on west limb of Pacheco syncline forms intermediate ridge that is not all light in tone.

Composition: Tuffaceous sandstone. Includes some to much high-matrix, scaly sandstone that is fine to medium grained, and some clean sandstone that is fine to coarse grained; high-matrix sandstone is probably dominant. Includes hard fossiliferous beds to thick and concretions to large. Minor pebble conglomerate. Clay coatings in some sandstone and free clay in some clayey sandstone.

Hardness: Firm where fresh and weathered. Concretions and some fossiliferous beds hard.

Bedding: Beds largely very thick (tens of feet) and distinct, but unit includes less abundant medium to thick sandstone interbedded with clayey

very fine sandstone in medium to very thick (6-ft) beds. Some indistinct thin to medium beds. Hard fossiliferous beds and concretions to thick. See sections by Weaver (1953).

Parting: On bedding planes, largely at very wide spacing (tens of feet). Minor parting at close to moderate spacing in some laminated sandstone.

Fracture: High-matrix sandstone has moderate to wide original spacing and close, some moderate, spacing of weathering fracture. Clean sandstone has mostly moderate to wide spacing, some to very wide (6 ft), producing very large blocks of firm, coherent rock (oversize blocks). Hard beds and concretions have moderate to wide fracture spacing. Much of rock scales where weathered.

Permeability: Mostly low intergranular permeability in bedrock, minor moderate. Most mantle low to very low.

Weathering: To greater than depth of exposures, about 20 ft or more.

Surficial mantle: Largely clayey. Dark sandy clay soils like samples WC11, WC20, and PC6A are typical.

Expansivity: Most bedrock unexpansive. Most mantle significantly expansive, some unexpansive. Samples: WC11, dark sandy clay soil, free swell 90 percent (exaggerated); WC20, mildly cracked black sandy clay soil, free swell 72 percent; PC6A, sandy clay soil, free swell 51 percent (exaggerated).

Stratigraphic thickness: About 130-200 ft.

Sources: Weaver, 1953; six stations.

MAP UNIT 369

Geologic units, (age), and location: Vaqueros Sandstone (T), in Santa Cruz Mountains; Butano Sandstone (T), in Santa Clara County and only near Kings Mountain in San Mateo County.

Summary: Largely sandstone, some mudstone and shale. Some significantly expansive bedrock and surficial mantle.

Composition: Largely sandstone, some mudstone and shale. Sandstone is fine to medium grained and moderately to well sorted, carbonate cement common in thicker beds.

Hardness: Hard to firm where fresh, firm to soft where weathered.

Bedding: Distinct sandstone beds medium to very thick (tens of feet), commonly 1-10 ft; sequences of clayey rock thin to very thick (10 ft). Some sandstone is laminated.

Parting: Moderate to very wide spacing, commonly 1-10 ft, along distinct bedding. Some at close to very close spacing in clayey rock.

Fracture: Spacing in sandstone ranges from close to very wide (6 ft), commonly moderate to wide; close to very close spacing in weathered clayey rock.

Permeability: Low intergranular permeability in sandstone, very low where cemented and in clayey rock. In shallow clayey bedrock and cemented sandstone, opening of fractures gives low permeability. Thus, bedrock at depth has largely low permeability, some to much very low; shallow rock has low permeability. Moderate in most surficial mantle, minor to some low to very low.

Surficial mantle: Largely granular, minor to some clayey subsoil.

Expansivity: Bedrock and surficial mantle are largely unexpansive, some of each significantly expansive. Samples: WO5, mudstone, free swell 54 percent; WO7, shale, free swell 62 percent; WO4, soil, free swell 59 percent; WO11, soil, free swell 43 percent.

Stratigraphic thickness: Variable, from a few feet to 3,000 ft or more.

Source: Ellen and others, 1972.

MAP UNIT 370

Geologic unit, (age), and location: Butano Sandstone (T), only near Sky Londa in Santa Cruz Mountains.

Summary: Largely sandstone, which is thinly interbedded with some mudstone and minor shale. Some significantly expansive bedrock and surficial mantle.

Composition: Sandstone interbedded with mudstone and minor amounts of shale. Sandstone is commonly very fine to fine grained, but medium to very thick beds are coarser. Unit is largely sandstone, some to much (30-40 percent) mudstone and shale.

Hardness: Largely firm where fresh, some sandstone (thicker beds) cemented hard; firm to soft where weathered.

Bedding: Distinct, largely very thin to thin, some medium; medium to very thick sandstone beds, including minor interbedded clayey rock, form a few sequences 25-100 ft in thickness.

Parting: Largely very close to close spacing, some moderate to very wide.

Fracture: Largely close spacing in thin to medium sandstone beds, moderate to wide in thicker beds; in mudstone close to moderate spacing where fresh, very close where weathered.

Permeability: Low intergranular permeability in sandstone, very low where cemented and in clayey rock. In shallow clayey rock and cemented sandstone, opening of fractures gives low permeability. Thus, bedrock at depth largely low, some to much very low; shallow bedrock low. Surficial mantle largely low, some moderate.

Surficial mantle: Largely clayey, some granular.

Expansivity: Most bedrock and mantle is unexpansive, some of each significantly expansive. Samples: WO12, interbedded fine sandstone and mudstone, free swell 58 percent; WO2, shale, free swell 75 percent; MH3A, shale, free swell 72 percent; MH3B, shale, free swell 73 percent; LH7, soil, free swell 50 percent.

Stratigraphic thickness: More than 2,500 ft.

Source: Ellen and others, 1972.

MAP UNIT 371

Geologic unit, (age), and location: Markley(?) Formation (T), only in the East Bay Hills near Oakland.

Summary: Not seen in field. Probably largely sandstone, some siltstone and shale. Difficult to distinguish from adjacent units 630 and 408 because it contains similar compositions. Radbruch (1969) reported that some sandstone may require blasting. According to Radbruch (1969), forms moderately steep-sided ridges and valleys.

Composition: Includes: (1) sandstone, probably fairly well sorted, mostly fine grained, ranging from very fine to medium grained, consisting of mostly angular and less commonly subrounded grains of abundant quartz, lesser feldspar and lithics, in matrix of clay, iron oxide, or both; (2) glauconitic sandstone; (3) silty fine-grained to very fine grained sandstone; (4) siltstone, mudstone, and clay shale. Unit is probably largely sandstone, some clayey rock. Some of unit resembles underlying unit 630, some resembles overlying unit 408.

Hardness: Some sandstone hard approaching firm both where fresh and weathered; shale, siltstone, silty sandstone, and mudstone firm where fresh, largely firm, some soft, where weathered.

Bedding: Unknown. Judging from units 630 and 408, some of unit consists of distinctly bedded thick to very thick sandstone between thin to very thick shale, silty sandstone, and siltstone. The remainder of unit is probably unbedded to indistinctly bedded.

Parting: Probably present in some of unit on distinct bedding planes, mostly at wide to very wide spacing, and in interbedded shale at close to very close spacing. Probably absent in remainder of unit.

Fracture: In hard sandstone at close to very wide (6-ft) spacing, probably largely moderate to wide. In firm dirty sandstone and mudstone at moderate to wide spacing in fresh rock, weathering close to very close.

Permeability: Sandstone (most of unit) probably has low intergranular permeability; clayey rock (some of unit) very low. Probably most mantle moderate, some low to very low.

Weathering: Hard sandstone weathered to depth of about 30 ft, other materials to depths of 10-30 ft.

Surficial mantle: Unknown, probably largely granular, some clayey.

Expansivity: Unknown, probably most bedrock unexpansive, some expansive. Probably most mantle unexpansive to significantly expansive, some severely expansive.

Stratigraphic thickness: 500-1,000 ft maximum thickness (Case, 1963).
Sources: Bartow, 1985; Case, 1963; Radbruch, 1969; Radbruch and Case, 1967.

MAP UNIT 372

Geologic unit, (age), and location: Markley Formation (T), only in Potrero Hills, northwest of Montezuma Hills.

Summary: Not seen in field. Similar to units 373 and 412 which occur near Mount Diablo (Weaver, 1949), but here contains a large lens of conglomerate consisting of hard rounded clasts, most 3 in. in diameter and less, some as much as 1 ft, in sand and silt matrix that constitutes 40 percent of deposit (Cooper-Clark and Associates, 1973). Sandstone is locally hard, called largely "moderately hard," in beds as thick as several feet, should be rippable in most cases (Cooper-Clark and Associates, 1973). See section by Tolman (1943).

Expression in aerial photographs: Largely resistant intermediate topography that has regular ribbing, but local hard topography has abundant resistant light-toned bands. Prominent to subdued bands, both light and dark in tone, are largely 5-30 ft wide but as wide as 50 ft; dark-toned bands are locally as wide as 100 ft. Dominantly light-toned, about one-third dark-toned. Minor outcrop within light-toned bands.

Permeability: Probably some to much bedrock has moderate intergranular permeability, much low, some very low. Probably most mantle moderate, some very low to low.

Surficial mantle: Probably largely granular, some clayey.

Expansivity: Probably most bedrock unexpansive, some expansive (clayey rock). Probably most mantle unexpansive to significantly expansive, some severely expansive.

Stratigraphic thickness: 1,300 ft (Bailey, 1930); 1,400 ft (Tolman, 1943); nearly 1,500 ft (Weaver, 1949).

Sources: Bailey, 1930; Bartow, 1985; Clark, 1938; Cooper-Clark and Associates, 1973; Sims and others, 1973; Tolman, 1943; Weaver, 1949.

MAP UNIT 373

Geologic units, (age), and location: Markley Formation, lower sandstone member (T), north of Mount Diablo; Markley Formation, undivided (T), only near Concord.

Summary: Regularly interbedded sandstone and shale, largely in beds less than 6 ft in thickness, some more than 10 ft. Mostly sandstone but shale is almost equally abundant in parts of section. Probably one-third of sandstone has moderate intergranular permeability. Some bedrock and some to much mantle is severely expansive.

Expression in aerial photographs: Largely intermediate topography, especially to east where unit underlies ridge and valley topography that includes about one-third or more valley bottom, the rest consisting of fairly subdued hogbacks that are broadly ribbed to ribless and have rounded crests. Near old coal mines, some hard topography containing sharp ribs on back side of hogbacks, but most of this area shows hard to intermediate crests and no ribs, just resistant bands between soft, smooth, landsliding zones. Almost entire area shows subdued banding, largely light-toned, some dark-toned; zones of dominant dark tone are as wide as 500 ft or more. Both light- and dark-toned bands are typically 5-20 ft wide, but some dark-toned bands are as wide as 50 ft; light-toned bands as wide as 100 ft or more form caps of hogbacks. Along east side of Nortonville Road, nearly entire section is banded in this manner. Unit appears very regularly bedded.

Composition: (1) Sandstone, arkosic, characteristically rich in muscovite, poorly to moderately sorted (Fulmer (1964) called it well sorted), silty to varying degrees. Angular to subangular grains vary from fine to coarse, called anything from most commonly fine grained (Johnson, 1964) to medium to coarse grained (Clark, 1912); by our observations largely medium to coarse grained. Includes calcite-cemented and limonite concretions as large as 6 ft or more in diameter, many larger than 3 ft. (2) Interbeds of shale, mudstone, and siltstone, the shale often interlaminated with sandstone and siltstone. These materials are commonly carbonaceous and micaceous. Literature describes these materials as largely mudstone and siltstone, but our observations are of largely fissile shale and some mudstone. Interbeds include abundant limonite concretions to medium, abundant gypsum, and less abundant limestone nodules as much as several inches in length.

Unit is largely sandstone, but some to much is clayey rock that in places constitutes as much as half of unit; sections of dominant clayey rock as thick as several hundred feet (mapped by Brabb and others, 1971). Sandstone varies from relatively clean, outcropping to nearly outcropping rock, to silty, poorly exposed rock; proportions of these sandstones (1:2, clean:dirty) are suggested in column by Fulmer (1964). Some concretions.

Hardness: Sandstone firm to soft, most barely firm, where weathered; probably similar where fresh. Shale, mudstone, and siltstone are firm where fresh and weathered. Calcite concretions hard; limonite concretions firm to hard; limestone nodules hard.

Bedding: Distinct sandstone beds between shale and mudstone intervals; some intervals of shale and mudstone are distinctly interbedded at very thin to medium with sandstone and siltstone. Sandstone beds are crudely rhythmic, largely thick to 6 ft between similar to lesser thickness of shale, but include some beds thicker than 10 ft (as much as 100 ft or more, generally as much as 30 ft). Shale intervals as thick as 20 ft or more; intervals of dominant clayey rock as thick as several hundred feet. Sandstone beds are massive and have an irregular, bleb-like form. Very regular banding throughout unit on photographs suggests regular interbedding throughout. Many sandstone beds grade upward to more clayey sandstone that has parting and weathering fracture.

Parting: At distinct bedding contacts and within shale intervals. Within shale intervals, largely at very close spacing, moderate at the widest. Within some dirty sandstone near tops of beds where weathered, and at close to moderate spacing in some sandstone on micaceous partings. Parting is plentiful.

Fracture: In sandstone beds less than 6 ft in thickness, largely moderate to wide spacing, much regular, perpendicular to bedding; in beds more than 6 ft in thickness, variable spacing, some moderate, much moderate to wide, some as much as 6 ft and possibly 10 ft, largely irregular and indistinct. Overall, largely moderate to 4-ft spacing in sandstone. Close to moderate spacing of weathering fracture in dirty sandstone near ground surface. Shale intervals have close to very close spacing of weathering fracture and fissility on moderate to wide original spacing. Concretions in sandstone are as large as 6 ft or more in diameter, many greater than 3 ft, unfractured.

Permeability: Sandstone has largely moderate intergranular permeability where exposed, some low, probably overall two-thirds low, one-third moderate; shale interbeds very low to low. Thus, most bedrock low, some moderate, some very low. Probably most mantle moderate, some to much very low to low.

Weathering: Sandstone weathered to depths greater than 70 ft. Dirty sandstone develops weathering fracture and parting near ground surface. Cavernous weathering in some sandstone. Accumulations of surficial mantle as thick as 15 ft or more.

Surficial mantle: Probably most granular, some to much clayey. Clayey soils such as samples CL13A and CL15 are typical. Over very thick sandstone, subsoil, such as sample CL13B, is typical.

Expansivity: Most bedrock is unexpansive, but some is severely expansive (shale) throughout unit. Probably most mantle unexpansive to significantly expansive, some to much severely expansive. Bedrock samples: CL11A, typical shale, moderately cracked on surface of cut, free swell 89 percent; CL12, well-weathered shale, moderately cracked, typical, free swell 99 percent. Surficial mantle samples: CL13A, moderately cracked dark sandy clay soil, free swell 90 percent; CL15, typical mildly cracked clay soil, free swell 82 percent (exaggerated); CL13B, mildly cracked,

slightly clayey sand subsoil on sandstone, free swell 65 percent; AS22, light-brown sandy clay soil, typical, free swell 87 percent (exaggerated); CL11B, typical mildly cracked sandy clay subsoil, free swell 90 percent; CL18, moderately cracked clay subsoil, possibly substantial constituent, free swell 100 percent.

Stratigraphic thickness: About 2,000 ft (Brabb and others, 1971); 3,100 ft (Johnson, 1964); 1,975 ft (Fulmer, 1964); 2,300 ft (Clark, 1918).

Sources: Bartow, 1985; Brabb and others, 1971; Clark, 1918; Colburn, 1961; Fulmer, 1964; Johnson, 1964; Taff, 1935; 11 stations.

MAP UNIT 374

Geologic unit, (age), and location: Shale and sandstone (T), in Santa Teresa Hills south of San Jose.

Summary: Upper two-thirds to three-fourths of unit is sandstone, largely in very thick (10-ft or more) beds, covered by uncracked sand soil; lower one-fourth to one-third of unit is dominantly mudstone, covered by severely expansive silty clay soil. Sandstone is firm, has moderate to wide fracture spacing, low to moderate permeability, and many largely firm oversize blocks as large as 5 ft in diameter.

Expression in aerial photographs: Irregular, smooth intermediate topography that lacks ribbing and banding. Very minor outcrop evident.

Composition: (1) Upper two-thirds to three-fourths of unit is sandstone of fine to coarse angular grains, mostly medium to coarse grained, poorly to moderately well sorted. Some to most rock is calcite cemented where fresh (Bailey and Everhart, 1964), minor cemented where weathered. (2) Lower one-fourth to one-third of unit is mudstone, fissile and exceptionally powdery (Bailey and Everhart, 1964); includes shale (Bailey and Everhart,1964). (3) Minor limestone in pods and beds as thick as 25 ft, most 3-5 ft (Bailey and Everhart, 1964). (4) Minor volcanic rock (like unit 260) near Blossom Hill.

Hardness: Weathered sandstone is largely firm, minor hard, case hardens by iron oxide (Bailey and Everhart, 1964); fresh sandstone hard (cemented) to firm, some to most hard (Bailey and Everhart, 1964). Mudstone firm where weathered and probably where fresh. Limestone hard.

Bedding: In lower (mudstone) part of unit, sandstone occurs in distinct beds as thick as 10 ft between very thick mudstone. In upper part of unit, sandstone beds largely very thick (more than 10 ft?).

Parting: Present on distinct bedding planes, largely at very wide spacing (more than 10 ft). Probably present at close to wide spacing in most mudstone. Thus, spacing largely very wide, but close to wide in one-fourth to one-third of unit.

Fracture: Sandstone has largely moderate to wide spacing, ranging from very close to 4 ft, but produces many oversize blocks (3-5 ft in diameter), most internally fractured. Mudstone has very close to moderate spacing of weathering fracture. Limestone largely moderate, some wide.

Permeability: Intergranular permeability of sandstone low to moderate where weathered, much of each; very low to moderate where fresh; mudstone very low. Thus, in weathered rock about three-eighths of unit moderate, three-eighths low, one-fourth very low; in fresh rock probably some moderate, some low, much very low. Most mantle moderate, some very low.

Surficial mantle: Largely granular, some clayey. Sample STH9, dark silty clay soil on mudstone, is typical of about one-fourth to one-third of soils (those on mudstone); remaining two-thirds to three-fourths is sand soil.

Expansivity: Most bedrock unexpansive, minor to some significantly expansive. Most mantle unexpansive, some severely expansive. Samples: STH11, weathered clayey bedrock, moderately cracked, local constituent, free swell 60 percent; STH9, mildly cracked silty clay soil, free swell 100 percent, typical of soil on mudstone. Soil on sandstone is uncracked.

Stratigraphic thickness: At least 900 ft (Bailey and Everhart, 1964).

Sources: Bailey and Everhart, 1964; three stations.

MAP UNIT 375

Geologic unit, (age), and location: Tolman Formation of Hall (1958) (T), at mouth of Niles Canyon near Fremont.

Summary: Not seen in field. Probably largely firm sandstone of low and probably some moderate permeability, but includes some calcite-cemented bioclastic sandstone especially near Tolman Peak, some conglomerate near Niles, and probably some clayey rock. No information on bedding thickness, fracture, and surficial mantle, but mantle probably ranges from sandy to clayey.

Expression in aerial photographs: Intermediate topography that has developed some ribbing parallel to bedding. Includes light-toned bands and dark-toned nonresistant bands 20-200 ft in width, fairly subtle. Minor outcrop within light-toned bands.

Composition: (1) Bioclastic sandstone consisting of fragments of calcareous algae and other organic material in a finer grained quartz sand matrix, the matrix being as coarse as very coarse grained to gritty (measured from thin-section photograph). This sandstone consists of approximately 35 percent organic debris, 40 percent quartz, 5 percent potassium feldspar, 10 percent calcite, 2 percent glauconite, and 3 percent mica, hornblende, pyroxene, and dark lithics, all subangular to angular. (2) Grades to medium-grained lithic quartz sandstone, locally containing abundant barnacle remains, grains subangular to angular. (3) Conglomerate, predominantly of chert pebbles, well sorted, average 0.75 in. in diameter. (4) Probably some clayey rock, judging from expression in aerial photographs.

Proportions unknown, probably largely sandstone, some of which is cemented, some conglomerate, some clayey rock. Bioclastic sandstone underlies Tolman Peak and grades laterally from sandstone to conglomerate near Niles.

Hardness: Largely firm where fresh, firm to soft where weathered; probably some hard calcite-cemented rock, especially near Tolman Peak where bioclastic sandstone has 10 percent calcite, and in remainder of unit where barnacle-rich beds occur.

Bedding: Unknown. No mention other than conglomerate interbeds.

Parting: Unknown, but probably largely absent to very widely spaced. No mention of clayey interbeds.

Permeability: Bedrock probably has largely low intergranular permeability, probably some moderate and some very low. Cemented rock and much clayey rock probably have low fracture permeability in shallow rock. Probably most mantle moderate, some low to very low.

Weathering: Hall (1958) noted much weathering of feldspars to clay.

Surficial mantle: Probably largely granular, some clayey.

Expansivity: Most bedrock and mantle unexpansive, probably some of each expansive.

Stratigraphic thickness: From 470 ft to more than 900 ft (Hall, 1958).

Source: Hall, 1958.

MAP UNIT 376

Geologic unit, (age), and location: Domengine Sandstone (T) (equivalent to the combined Muir and Escobar Sandstones of Weaver, 1953), only on east limb of Pacheco syncline, west of Concord.

Summary: Largely sandstone, some clayey interbeds. Includes many hard concretions, some as large as 15-20 ft in diameter. Difficult trenching in massive sandstone of upper part (not brittle). Much moderate permeability. Some bedrock and mantle is expansive. See units 344, 441, and 414.

Expression in aerial photographs: Variable. Forms prominent intermediate to hard ridge, but also underlies very subdued soft topography. Banded, not homogeneous. Light-toned resistant bands are 30-100 ft wide, some quite prominent topographically. Much has subtle banding that shows little topographic expression. Some good sections on photographs.

Composition: Equivalent to combination of Weaver's (1953) Muir and Escobar Sandstones, hence basically a combination of units 441 and 344. Here, however, Weaver's Muir Sandstone consists of interbedded sandstone and mudstone, sandstone dominant over mudstone and matrix-saturated sandstone. Sandstone is fine to medium grained, tuffaceous, and ranges from moderately to well sorted. Includes minor calcite-cemented fossiliferous beds and concretions. Thus, we conceive upper half of unit as very thick bedded, moderately permeable, medium-grained sandstone, and lower half as fine-grained, tuffaceous and somewhat silty sandstone of mostly low permeability, interbedded with matrix-saturated sandstone, mudstone, and some shale.

Hardness: Sandstone firm, some brittle (tuffaceous?), some weathers soft. Cemented beds and concretions hard. Interbedded clayey rock firm, some weathers soft. Massive sandstone in upper part is not brittle.

Bedding: Distinct. Most is bedded at medium to very thick (6 ft), much of which is medium to thick bedded. Some very thick (greater than 10-ft) beds in upper part of unit. Hard cemented beds are medium to thick (several in section, broadly lenticular), and concretionary beds as thick as 4 ft. Some beds of matrix-saturated sandstone as thick as 50 ft. See sections by Weaver (1953).

Parting: At bedding planes, largely moderate to very wide (6 ft). Some parting in clayey interbeds at very close to moderate spacing, but much lacks parting.

Fracture: Irregular in sandstone, moderate to very wide, probably largely moderate to wide spacing. Much scaling in sandstone. Hard cemented beds fractured at wide to moderate spacing. Concretions as large as 15-20 ft in diameter, most large to 6 ft.

Permeability: Much bedrock has moderate intergranular permeability, much low, minor to some very low. Most mantle moderate, some low to very low.

Weathering: Sandstone weathered to depths greater than 30 ft, much to depths greater than 40 ft. Mudstone and matrix-saturated sandstone fresh at 20 ft, probably weathered to depths of 10-15 ft. Some sandstone scales where weathered.

Surficial mantle: Largely granular, some clayey.

Expansivity: Most bedrock unexpansive, some expansive, probably minor severely expansive (clayey rock). Most mantle unexpansive, some to possibly much significantly expansive. See samples for units 344 and 441.

Sources: Weaver, 1953; five stations.

MAP UNIT 377

Geologic unit, (age), and location: Meganos Formation, Division D of Clark and Woodford (1927) (T), near Mount Diablo.

Summary: Largely sandstone, some clayey rock. Sandstone is variable, from dirty and fine grained to clean and coarse grained. Minor cemented rock. Some to half of unit has moderate intergranular permeability, some high. Some to much mantle and probably some bedrock is significantly expansive.

Expression in aerial photographs: Resistant ridge former. Includes one prominent resistant ridgetop bed, about 100 ft in width, in which sharp white band is 10 ft wide, little apparent outcrop. Dip slope of much of hogback is hard topography, but toward Deer Valley Road this becomes more subdued intermediate topography that has ribbing and subtle light-gray and dark-gray bands 30-100 ft in width. Except for prominent resistant bed, unit is moderately resistant, not strongly so.

Composition: (1) Sandstone, coarse to medium grained, clean, well to moderately well sorted. Some is somewhat silty, some has minor pebbles, and some contains tuffaceous clasts. (2) Sandstone, very fine to medium grained, largely fine grained, varying from moderately or poorly sorted dirty sandstone of low permeabilty to well-sorted and moderately well sorted clean sandstone of moderate permeability; largely dirty sandstone, some clean. (3) Calcite-cemented beds and concretions, including shell bed that is an excellent outcropping marker bed and ridge former. Cemented beds occur in both compositions 1 and 2. (4) Clayey and silty interbeds of sandy and tuffaceous mudstone, shale, siltstone, laminated silty fine sandstone, and clayey fine sandstone; some clayey sandstone is gritty. (5) Conglomerate reported at base (Brabb and others, 1971). (6) Sandstone, quite firm, resistant bed, fine to medium grained, scaly.

Proportions vary along strike. To west, unit is largely composition 2 but contains some clayey interbeds, minor cemented beds, and quite firm scaly sandstone (composition 6). To east, unit includes as much as half coarse clean sandstone (composition 1); the remainder is either largely sandstone of composition 2 or largely clayey sandstone of composition 4. Minor cemented rock, minor conglomerate.

Hardness: Coarse sandstone is largely soft (although some of this is firm at the surface because case hardened), some firm, both where fresh and weathered. Sandstone of composition 2 is largely firm where weathered, some quite firm, some soft. Clayey interbeds firm where fresh and weathered. Cemented rock hard. Scaly sandstone quite firm.

Bedding: Coarse sandstone in very thick (10- to 150-ft) distinct beds, some internally bedded and crossbedded (Clark and Woodford, 1927), between medium to very thick interbeds of clayey rock. Sandstone of composition 2 is distinctly to indistinctly bedded in beds that range from very thin to very thick (8 ft), largely thick; bedding is defined by clean against dirty sandstone and by medium to thick clayey interbeds. Cemented beds largely to thick, some as much as 4 ft. Quite firm sandstone of composition 6 is 25 ft thick.

Parting: Largely absent in coarse sandstone, present in some at close to moderate spacing. In some of composition 2, parting occurs on lamination largely at moderate spacing, ranging from close to wide; in some, parting (for ripping) largely at wide but slope-failure parting at 6 ft. Many cemented beds parted at moderate spacing.

Fracture: Indistinct and variable in coarse sandstone, moderate to very wide spacing (10 ft). Some sandstone of composition 2 is fractured at moderate to wide spacing (clearly defined within 10 ft of ground surface), some shows close- to moderate-spaced weathering fracture and scaling. Clayey interbeds have very close to moderate spacing of weathering fracture. Scaly sandstone has moderate to wide spacing, clearly defined near ground surface. Cemented rock largely moderate to wide spacing, some as much as 4 ft.

Permeability: Coarse sandstone has moderate to high intergranular permeability, much of each; composition 2 largely low but some moderate; clayey interbeds low to very low, largely low; scaly sandstone low. Thus, to west intergranular permeability of bedrock is largely low but some moderate, varying along strike toward the east to about half moderate and some of both high and low; minor to some very low throughout, but this probably is accompanied by low fracture permeability in shallow rock. Most mantle moderate, probably some low.

Weathering: Much fracture is distinct only near ground surface, apparently absent or incipient at depth. Coarse sandstone weathered deeply (greater than 40 ft).

Surficial mantle: Largely granular, probably some clayey. Largely uncracked silty sand soil to the east, grading toward the west to about equally abundant uncracked silty sand soil and mildly cracked brown silty soil, such as sample AS27.

Expansivity: Bedrock largely unexpansive, probably some significantly expansive (clayey rock). Most mantle unexpansive, some to much significantly expansive. Sample AS27, mildly cracked silty soil typical of low-lying terrain, free swell 60 percent.

Stratigraphic thickness: 100-900 ft (Brabb and others, 1971); 0-700 ft (Johnson, 1964); 0-300 ft (Clark and Woodford, 1927).

Sources: Brabb and others, 1971; Clark, 1921; Clark and Woodford, 1927; Johnson, 1964; five stations.

MAP UNIT 378

Geologic unit, (age), and location: Strata of German Rancho (T), near Sonoma County coast.

Summary: Largely sandstone, lesser mudstone and conglomerate. Probably most bedrock and mantle is unexpansive.

Composition: Largely sandstone, lesser mudstone and conglomerate. Most of unit is moderately sorted, medium-grained sandstone accompanied by minor interbedded mudstone, but includes sequences a few feet to hundreds of feet thick of either mudstone and fine-grained to very fine grained sandstone or conglomerate having sandstone matrix. Conglomerate clasts (cobbles and locally boulders) are composed largely of granitic rock and some metamorphic rock, but locally they are composed of siliceous porphyritic volcanic rock. Minor to some sandstone is calcite cemented.

Hardness: Fresh rock is hard to firm, moderately weathered rock is firm to hard. Calcite-cemented beds are hard.

Bedding: Distinct, medium to very thick (30 ft or more); thick to very thick beds abundant, beds locally thin to very thin.

Parting: At distinct bedding planes. Mudstone is not fissile.

Fracture: In rift valley, sandstone is shattered at close to moderate spacing; elsewhere largely wide to very wide (15 ft), some moderate.

Permeability: Intergranular permeability of bedrock largely low, some very low, some coarser sandstone may be moderate, especially where weathered; probably some low fracture permeability in shallow rock. Most mantle moderate.

Weathering: Some weathered rock so soft as to gully in ditches along roads.

Surficial mantle: Largely granular.

Expansivity: Bedrock and mantle probably largely unexpansive. No sample.

Stratigraphic Thickness: 10,000-20,000 ft or more.

Sources: Blake and others, 1971; Wentworth, 1966; two stations.

MAP UNIT 379

Geologic unit, (age), and location: Undifferentiated sandstone, mudstone, and conglomerate (TK), near Sonoma County coast.

Summary: Largely sandstone, probably some mudstone and some conglomerate. Almost all rock is soft to a depth of 30 ft, shattered at close to moderate spacing.

Composition: Largely sandstone, lesser mudstone and conglomerate. Similar to units 378 and 613, minor amount similar to unit 666.

Hardness: Almost all rock is soft to depth of 30 ft or more.

Bedding: Probably most sandstone in medium to very thick distinct beds.

Parting: Absent.

Fracture: All shattered at close to moderate spacing, largely less than 3-4 in.

Permeability: Moderate intergranular permeability in weathered medium-grained sandstone, very low in mudstone, fresh rock like units 378 and 613. Thus, bedrock has largely low and very low intergranular permeability at depth, low to moderate intergranular and fracture permeability in shallow weathered rock. Probably much to most mantle moderate, much low to very low.

Weathering: Highly weathered to depths greater than 30 ft; almost all rock is soft in weathered zone.

Surficial mantle: Probably much to most granular, much clayey.

Expansivity: Probably most bedrock and mantle unexpansive. Sample SP13, sandy soil on sandstone, typical(?), free swell 38 percent.

Sources: Blake and others, 1971; Wentworth, 1966; one station.

MAP UNIT 380

Geologic units, (age), and location: Purisima Formation, undivided (T), Tunitas Sandstone Member (T), and Tahana Member (T); unnamed sandstone (T); in San Mateo County part of Santa Cruz Mountains.

Summary: Largely fine-grained sandstone and siltstone; most of this has clay or ash matrix. Rock firm where fresh, firm to soft where weathered. Some bedrock and most surficial mantle is expansive.

Composition: Fine-grained sandstone, siltstone, locally much silty mudstone, minor amounts of medium- to coarse-grained sandstone and porcelaneous shale and mudstone. Most fine-grained sandstone and siltstone has clay or ash matrix; medium- to coarse-grained sandstone commonly lacks matrix.

Hardness: Firm where fresh, firm to soft where weathered; porcelaneous rock firm to hard.

Bedding: In fine-grained sandstone commonly absent to indistinct, local distinct beds medium to very thick; in other compositions thin to medium.

Parting: In sandstone commonly absent, local parting at moderate to very wide spacing. In other compositions much parting at close to moderate spacing.

Fracture: Spacing moderate to very wide in fine-grained sandstone where fresh, very close to moderate where weathered; close in porcelaneous rock.

Permeability: Bedrock has largely very low intergranular permeability, some low, probably minor moderate (in clay-poor sandstone). In surficial mantle largely very low, some low, some moderate (where mantle is sandy).

Surficial mantle: Largely clayey, some granular.

Expansivity: Most bedrock unexpansive, some significantly expansive, minor severely expansive. Most mantle significantly expansive, some severely expansive, some unexpansive. Bedrock samples: PA18, coarse sandstone, free swell 26 percent; SGG5B, bedrock, free swell 34 percent; SGG3B, bedrock, free swell 40 percent; SGG3A, weathered bedrock, free swell 92 percent; PA8, very fine sandstone, free swell 45 percent; WO3C, bedrock, free swell 52 percent; LH14A, bedrock, free swell 57 percent; PA6B, bedrock(?), free swell 60 percent; LH12B, bedrock, free swell 64 percent; HMB6, bedrock(?), free swell 80 percent; HMB7A, bedrock(?), free swell 90 percent; PA7, siltstone, free swell 100 percent. Surficial mantle samples: PA11, uncracked granular soil, free swell 32 percent; SGG5A, soil, free swell 43 percent; PA10, slightly cracked soil, free swell 48 percent; WO3A, soil on landslide, free swell 51 percent; LH14B, soil, free swell 54 percent; HMB9, uncracked organic soil, free swell 57 percent; SGG2A, soil, free swell 60 percent; MH12, gray soil, free swell 62 percent; LH15, soil, free swell 64 percent; PA3, clayey soil, free swell 68 percent; SGG2D, soil(?), free swell 69 percent; SGG7, soil, free swell 75 percent; PA6A, soil, free swell 88 percent; LH12A, soil, free swell 103 percent; SGG2B, upper popcorn subsoil, free swell 110 percent; SGG2C, lower popcorn subsoil, free swell 120 percent; LH13, soil, free swell 115 percent; HMB7B, soil, free swell 128 percent; WO3B, soil on landslide, free swell 158 percent.

Stratigraphic thickness: 250-2,150 ft (Tunitas Sandstone Member 250-400 ft, other units much thicker).

Source: Ellen and others, 1972.

MAP UNIT 381

Geologic unit, (age), and location: Neroly Sandstone (T), only in the East Bay Hills (excluding area north of Alamo) and in southern Napa Range near Carneros Creek.

Summary: Medium- to coarse-grained sandstone that has clay coatings generally approaching saturation interbedded with fine clayey sandstone and intervals of mudstone, siltstone, and shale. Mostly firm and of low permeability, but some moderate permeability. Toward the south in the East Bay Hills, proportion of dirty and fine-grained rock increases and the coarser sandstone becomes harder. Area of exposure near Carneros Creek not seen in field. Much mantle is severely expansive.

Composition: Interbedded (1) medium- to coarse-grained andesitic sandstone, well sorted, rounded to subrounded, most having characteristic blue-gray clay coatings (see unit 400), locally including beds of shell debris and pebbly sandstone containing pebbles as much as 1 in. in diameter; (2) fine-grained sandstone, some tuffaceous, well to moderately well sorted, having clay coatings; and (3) mudstone, siltstone, and shale.

Some medium- to coarse-grained sandstone contains calcite-cemented beds to medium and calcite concretions as large as thick by 3 ft in length. Beds of ash in places. To the south in the East Bay Hills, well-sorted sandstone becomes less abundant and is replaced by fine- to medium-grained dirty and tuffaceous sandstone, mudstone, and shale. Near Rocky Ridge, laminated shale containing thin bentonite beds is common in upper half of unit.

Most of unit is sandstone and dirty sandstone, some mudstone and shale. In the East Bay Hills near San Pablo Bay, about half of unit is the resistant, coarser sandstone; to the south, near Las Trampas Ridge, this material constitutes only some of unit. Proportions unknown near Carneros Creek.

Hardness: Mostly firm pieces where fresh and weathered, but sandstone weathers firm to soft. Beds of shell debris firm to quite firm. Calcite-cemented beds and concretions hard where fresh, weather firm to soft. To the south in the East Bay Hills, well-sorted sandstone, here less abundant, is firm to hard, and some is calcite cemented and hard.

Bedding: Large-scale bedding is clear in places on aerial photographs. In outcrop, bedding is indistinct to distinct. Unit includes both very thick (10- to 100-ft or more) beds and thin to very thick (4-ft) interbedded rock in intervals as thick as many tens of feet. Very thick beds in places contain medium to very thick (4-ft) beds of shell debris and pebbly sandstone. Hard calcite-cemented beds and concretions thin to thick. Many sandstone beds are internally bedded and crossbedded. Ash beds thin to medium. To the south in the East Bay Hills, most very thick beds are dirty sandstone or mudstone; well-sorted sandstone mostly occurs in beds that are thick or less, but some are as thick as 20 ft.

Parting: Mostly absent in very thick beds, but a few partings occur within these beds in places. Present on some bedding planes, absent on many; good parting, for example, on contacts between sandstone and mudstone. Parting in siltstone and mudstone in places at close spacing, in places as wide as 4 ft. In shale, at very close spacing.

Fracture: In medium- to coarse-grained sandstone, mostly moderate to wide spacing, some close to 4 ft, except within several feet of ground surface where close to moderate spaced fracture is parallel to ground surface in places. In fine sandstone, moderate to wide original spacing and close to moderate spacing of weathering fracture; much spalls at very close. Mudstone and siltstone have close to moderate original spacing, close to very close spacing of weathering fracture. Hard calcite-cemented beds have wide spacing.

Permeability: Sandstone has mostly low intergranular permeability owing to clay coatings, but as much as 25 percent of medium- to coarse-grained sandstone may have moderate intergranular permeability in shallow rock, probably more at depth. Minor high intergranular permeability locally. Intergranular permeability of siltstone low, mudstone and shale very low. Thus, most bedrock low, minor to some moderate, some very low. To south, permeability of unit decreases. Probably much mantle very low to low, much moderate.

Weathering: Sandstone weathered to depths greater than 20 ft. Mudstone fresh in places at depth of 5 ft.

Surficial mantle: On the whole probably much clayey, much granular, but varies from largely clayey to largely granular. Radbruch and Case (1967) reported sparse sandy loam soil less than 1 ft thick. Sample BV28A represents the most expansive end of typical soil near Briones Reservoir, but here unit includes some soil like sample BV28B, popcorn clay soil, most expansive soil seen here. At southern extreme (Rocky Ridge), three-fourths or two-thirds of soil is mildly cracked at most; the remaining one-fourth to one-third has a moderately cracked subsoil, of which sample LTR13 is typical.

Expansivity: Probably most bedrock unexpansive, but much may be significantly expansive and some may be severely expansive. Probably much mantle unexpansive to significantly expansive, much severely expansive, but near Las Trampas Ridge only some is severely expansive. Samples: BV28A, dark clayey soil, most expansive typical soil, free swell 92 percent; BV28B, popcorn clay soil, most expansive soil at this station, free swell 120 percent; LTR13, subsoil, typical of some soil in southern extreme, free swell 98 percent; MI19, dark sandy clay soil, free swell 94 percent.

Stratigraphic thickness: 1,250 ft near San Pablo Bay (Weaver, 1944); 1,100-1,400 ft near Rocky Ridge (Ham, 1952); more than 1,500 ft north of Sacramento River (Weaver, 1909).

Sources: Condit, 1938; Ham, 1952; Osmont, 1905; Radbruch and Case, 1967; Vitt, 1936; J.R. Wagner, written commun., 1973; Wagner, 1978; Weaver, 1909, 1944, 1949; seven stations.

MAP UNIT 382

Geologic units, (age), and location: Briones Sandstone, G and I members of Wagner (1978) (T), in the East Bay Hills.

Summary: Dramatically bedded unit consisting of boldly outcropping firm to hard sandstone in thick to very thick (30-ft) beds between nonresistant, very thick (5- to 100-ft) intervals of silty and clayey sandstone and shale. Minor to some mantle is significantly expansive. Mapped as Cierbo Sandstone by Ham (1952).

Composition: Largely sandstone. Outcropping beds of sandstone are mostly medium grained, tuffaceous at least in part, and have clay coatings that fill or nearly fill interstices. Some beds of sandstone are coarse grained and conglomeratic. Minor conglomerate contains pebbles as much as 3 in. in diameter. Minor calcite-cemented concretions to large. Non-outcropping interbeds include: (1) firm, thin-bedded, medium- to coarse-grained sandstone that contains sufficient clay and silt to scale where weathered (some of unit) and (2) very thin to medium interbedded sandstone and shale (some of unit). Glauconite reported to be common. Occasional shell-breccia beds; rare limestone, some containing chert, some argillaceous.

Hardness: Outcropping sandstone firm to hard (much firm, much hard); nonoutcropping interbeds of sandstone and shale where weathered are firm and friable with difficulty, some soft. Concretions hard; pebbles in conglomerate hard. Limestone hard where fresh and weathered.

Bedding: Outcropping sandstone in thick to very thick (30-ft) distinct beds between very thick (5- to 100-ft) non-outcropping intervals composed of either thin-bedded dirty sandstone or very thin to medium interbedded sandstone and shale. Conglomerate in medium to thick beds. Limestone in very thick (30- to 70-ft) lens on Divide Ridge. Unit is dramatically bedded.

Parting: Present at contacts of outcropping sandstone beds; within some outcropping beds at very wide (6 ft or more), but some beds as thick as 20 ft remain unparted; within interbedded sandstone and shale at close to very close spacing.

Fracture: In outcropping sandstone, fracture spacing is moderate to very wide (20 ft), mostly wide to very wide (10 ft). Sandstone and shale that make up nonresistant interbeds are fractured at very close to moderate spacing.

Permeability: Shallow sandstone has largely low intergranular permeability, some moderate; probably much of both moderate and low intergranular permeability in sandstone below shallow rock; shale very low. Thus, permeability of shallow bedrock is largely low, some moderate, some very low; below shallow rock probably much of both moderate and low, some very low. Most to almost all mantle moderate.

Weathering: Sandstone weathers from fractures inward, partially weathered at depth of 8 ft. Some outcropping sandstone scales somewhat where weathered. All interbed sandstone scales where weathered.

Surficial mantle: Most to almost all is granular (clayey sand soil).

Expansivity: Almost all bedrock is unexpansive. Most to almost all mantle is unexpansive, but minor to some is significantly expansive. Where observed, almost all mantle is uncracked; 10 percent at most is mildly cracked like sample LTR12, clayey sand soil, free swell 69 percent (possibly exaggerated). This sample represents the most expansive material seen in this unit and in units 330, 331, and 383.

Stratigraphic thickness: 800-900 ft (J.R. Wagner, written commun., 1973).

Sources: Ham, 1952; Newton, 1948; Trask, 1922; J.R. Wagner, written commun., 1973; Wagner, 1978; two stations.

MAP UNIT 383

Geologic unit, (age), and location: Briones Sandstone, F member of Wagner (1978) (T), in the East Bay Hills.

Summary: Nonresistant unit, forms swales and upland valleys between highly resistant units 330 and 382. Firm and hard sandstone, probably interbedded with less abundant mudstone. Bedrock and mantle probably largely unexpansive.

Composition: Probably largely sandstone, interbedded with some to much sandy mudstone or shale. Sandstone is fine to medium grained, variably silty and clayey (some scaly), but all contains sufficient fines for low permeability. Sandstone contains hard calcite-cemented concretions as large as medium, especially near base, and minor medium to thick hard calcite-cemented beds. Sandstone is pebbly in places near upper contact with unit 382. J.R. Wagner (written commun., 1973) suggested that shale and mudstone are dominant over sandstone; Ham (1952) suggested the opposite.

Hardness: Where weathered, some sandstone is hard, some firm. Mudstone has firm pieces. Concretions and calcite-cemented sandstone hard.

Bedding: Probably distinct, very thick (5- to 7-ft) beds of sandstone between thick beds of sandy mudstone, rhythmically interbedded. Hard calcite-cemented beds medium to thick; hard sandstone beds as thick as 5 ft or more. Unit has distinct beds on photographs and from distance on ground, but bedding contacts could well be gradational or otherwise indistinct.

Parting: Probably present at contacts between sandstone and mudstone at wide to very wide (7-ft) spacing.

Fracture: In sandstone close to moderate spacing, possibly some wide. Mudstone probably has close spacing. Some sandstone scales where weathered.

Permeability: Sandstone (probably most of unit) has low intergranular permeability; mudstone (some to much of unit) very low, but much probably has low fracture permeability in shallow rock. Probably most mantle moderate, some low to very low.

Weathering: Unknown. Some sandstone scales.

Surficial mantle: Probably largely granular, some clayey.

Expansivity: Most bedrock unexpansive, but some to much may be significantly expansive where weathered (clayey rock). Probably most mantle unexpansive, some significantly expansive. Uncracked soil. See sample for unit 382.

Stratigraphic thickness: 0-400 ft (J.R. Wagner, written commun., 1973).

Sources: Ham, 1952; Newton, 1948; Trask, 1922; J.R. Wagner, written commun., 1973; Wagner, 1978; two stations.

MAP UNIT 384

Geologic unit, (age), and location: Sandstone, siltstone, and shale (T), in southern Napa Range near Carneros Creek. Mapped as Monterey Shale by Weaver (1949).

Summary: Not seen in field. Reported to be medium- to fine-grained sandstone, shaly sandstone, and sandy shale. Probably like units 385, 332, and 406.

Composition: Medium- to fine-grained, light-gray to white sandstone, shaly sandstone, and sandy shale. Probably largely sandstone, some shale.

Hardness: Probably firm.

Bedding: Probably largely unbedded, some indistinct bedding in places.

Parting: Probably absent in most of unit, present in shale at close to very close spacing.

Permeability: Bedrock probably has largely low intergranular permeability, some very low. Probably much mantle moderate, much low to very low.

Surficial mantle: Unknown. Probably much granular, much clayey.

Expansivity: Probably most bedrock unexpansive, probably some expansive (clayey rock). Probably much mantle expansive. See samples for units 332 and 406.

Stratigraphic thickness: Averages about 500 ft (Weaver, 1949).

Sources: Fox and others, 1973; Weaver, 1949.

MAP UNIT 385

Geologic unit, (age), and location: Monterey Group, sandstone unit (T), only in the East Bay Hills between Dublin and Upper San Leandro Reservoir.

Summary: Not seen in field. Probably mostly like other sandstone units of the Monterey Group, consisting of firm to quite firm sandstone interbedded with less abundant clayey rock. Near Upper San Leandro Reservoir, however, much sandstone may be cemented and probably hard. Probably most bedrock and mantle is unexpansive.

Expression in aerial photographs: Between Dublin and Cull Canyon, forms intermediate topography, distinctly banded by light- and dark-toned zones as wide as 70 ft.

Composition: (1) Sandstone, fine to medium grained; most has silt and clay matrix that produces weathering fracture, but some lacks weathering fracture. (2) Clayey interbeds, probably largely clayey sandstone. (3) Fossiliferous, well-cemented pebbly lithic feldspathic graywacke interbedded with sandy shale; graywacke is poorly sorted and consists of angular grains in matrix that appears to be clay or chlorite (Ham, 1952). Unit is probably largely sandstone (composition 1), minor to some clayey interbeds (composition 2). Cemented sandstone (composition 3) reported only near Upper San Leandro Reservoir, where much sandstone may be cemented.

Hardness: Sandstone probably firm to quite firm where fresh, firm and lesser quite firm where weathered; probably hard where cemented. Clayey rock probably firm where fresh and weathered.

Bedding: Probably most sandstone beds very thick, some medium to thick.

Parting: Spacing probably largely very wide.

Fracture: Uncemented sandstone probably has original moderate to wide spacing, and probably most has close to moderate spacing of weathering fracture, much spheroidal. Cemented sandstone unknown.

Permeability: Sandstone (most of unit) probably has low intergranular permeability, clayey rock (minor to some of unit) low to very low, except near Upper San Leandro Reservoir where much to most bedrock probably has very low intergranular permeability and low fracture permeability in shallow rock. Probably most mantle moderate, some to much low to very low.

Surficial mantle: Probably largely granular, some to much clayey. Granular soils probably similar to sample DU6A in unit 528.

Expansivity: Most bedrock unexpansive, probably some expansive (weathered clayey rock). Probably most mantle unexpansive, some to much significantly expansive. See samples DU6A and DU6B in unit 528.

Source: Ham, 1952.

MAP UNIT 386

Geologic unit, (age), and location: Hambre Sandstone (T) of the Monterey Group, only between Niles Canyon and Calaveras Reservoir, east of Fremont.

Summary: Sandstone, hard to firm where weathered, interbedded with firm clayey sandstone to siltstone. North of Mission Pass, relatively clean sandstone and clayey rock are about equally abundant; south of Mission Pass, largely clayey rock. Much to most mantle is severely expansive.

Expression in aerial photographs: Intermediate topography that varies from swale-forming, nearly soft topography to ribless but fairly resistant intermediate topography that contains small aligned bumps or peaks, which are possibly cemented rock. Tone is uniform, smooth, unbanded, in contrast to adjacent units. More resistant north of Mission Pass, forms swales south of Mission Pass.

Composition: (1) Sandstone, medium to fine grained, well to moderately well sorted, some calcite cemented, some cemented but lack of reaction to acid suggests clay cementation. (2) Clayey fine- to medium-grained sandstone and lesser siltstone and silty mudstone. (3) Limestone. (4) Shell-breccia sandstone, calcite cemented. North of Mission Pass, unit consists of sandstone (composition 1) interbedded with about equal amounts of clayey sandstone (composition 2), although composition 1 is probably dominant; minor limestone (one bed) and shell-breccia sandstone (two beds). South of Mission Pass, unit is probably dominantly clayey rock (composition 2).

Hardness: Sandstone (composition 1) is hard where fresh, hard to firm where weathered, some durable (calcite cemented), some probably not durable (clay cemented?). Clayey sandstone, siltstone, and mudstone firm where weathered, probably firm where fresh. Limestone and shell breccia hard to outcrop.

Bedding: North of Mission Pass, two styles of bedding are about equally abundant: (1) thin to thick, some as much as 6-ft, interbedded sandstone and clayey sandstone, both compositions about equally abundant, in fairly distinct beds; and (2) very thickly interbedded sandstone and clayey sandstone, largely sandstone, in intervals 10-50 ft and more in thickness, distinct beds. Limestone in thick bed; shell breccia in 6-ft beds.

Parting: North of Mission Pass, present on most distinct bedding planes, which are close to wide in about half of unit, very wide (10 ft or more) in other half of unit. Very thick bedded sandstone shows some internal parting, but mostly at spacing of 10 ft or more. Little parting within clayey interbeds.

Fracture: Most sandstone has close to moderate spacing of weathering fracture on moderate to 4-ft spacing of original fracture, but in thin- to thick-bedded part of unit original spacing is probably close to moderate. Some very thick beds of sandstone show no weathering fracture and produce large to 4-ft blocks, but half or more of very thick sandstone beds have real or incipient weathering fracture at close to moderate spacing. Clayey sandstone, siltstone, and mudstone show much spheroidal weathering and produce close to very close, some moderate, spacing of weathering fracture. Limestone fractured at moderate to wide; shell breccia at wide to 5 ft.

Permeability: North of Mission Pass, shallow bedrock has largely low intergranular permeability, some to much very low (in mudstone and cemented sandstone); possibly some moderate intergranular permeability below shallow rock. South of Mission Pass, bedrock probably has low to very low intergranular permeability. Probably most mantle very low to low; some to much moderate, especially north of Mission Pass.

Weathering: Much sandstone has weathering fracture as described. Clayey sandstone shows much spheroidal weathering and abundant weathering fracture. Some sandstone fresh at depths of 5-10 ft, minor crops out. Limestone and shell-breccia sandstone fresh to outcrop.

Surficial mantle: Probably largely clayey; some to much granular, especially north of Mission Pass.

Expansivity: Much bedrock may be significantly expansive, some may be severely expansive. Much to most mantle severely expansive, some to much significantly expansive to unexpansive. Samples: NL5A, slightly cracked sandy silt soil, typical on sandstone, free swell 59 percent; NL5B, slightly cracked sandy clay soil on interbedded rock, typical, free swell 85 percent; NL19, well-cracked dark sandy clay soil, typical, free swell 89 percent. No cracked bedrock noted.

Stratigraphic thickness: About 500 ft (Hall, 1958).

Sources: Hall, 1958; two stations.

MAP UNIT 387

Geologic unit, (age), and location: Hambre Sandstone (T) of the Monterey Group, only northeast of Castro Valley in the East Bay Hills.

Summary: Not seen in field. Probably largely firm, dirty, fine-grained sandstone that has weathering fracture and much spheroidal weathering; very thick beds. Minor to some shale interbeds. Probably much to most mantle severely expansive. See unit 364.

Expression in aerial photographs: Intermediate topography.

Composition: Probably largely arkosic sandstone that is mostly fine grained, some medium grained; largely dirty to clayey, resulting in weathering fracture, scaling, and low permeability. Minor to some silty shale to shale.

Hardness: Sandstone and shale probably firm where fresh and weathered.

Bedding: Sandstone is probably largely very thick bedded, called massive (Newton, 1948); occasional distinct shale interbeds or indistinct contrasting sandstone.

Parting: Probably largely absent; present in shale.

Fracture: Probably close to moderate spacing of weathering fracture, much spheroidal, on moderate to wide original spacing. Much may scale at very close spacing. Very close to moderate spacing of weathering fracture in shale.

Permeability: Intergranular permeability of sandstone (most of unit) probably low, some possibly moderate below shallow rock; shale (minor to some of unit) very low. Probably most mantle very low to low, some to much moderate.

Surficial mantle: Probably largely clayey, some to much granular.

Expansivity: Probably some bedrock expansive. Probably much to most mantle severely expansive, some to much significantly expansive to unexpansive. See samples for units 386 and 364.

Sources: Hall, 1958; Newton, 1948; Robinson, 1956.

MAP UNIT 388

Geologic unit, (age), and location: Oursan Sandstone (T) of the Monterey Group, only northeast of Castro Valley in the East Bay Hills.

Summary: Largely dirty to clayey fine- to medium-grained sandstone, most weathers spheroidally, but some calcite-cemented sandstone in very thick beds and minor to some clayey interbeds. Probably much mantle is severely expansive.

Expression in aerial photographs: Too narrow to locate confidently, probably light-toned resistant band of intermediate topography.

Composition: (1) Sandstone, arkosic, fine to medium grained, sand grains well sorted (Robinson, 1956), containing matrix of silt and clay (some quite clayey) sufficient for low permeability and weathering fracture. (2) Calcite-cemented sandstone, as beds and concretions. (3) Interbeds of clay shale, siliceous shale, and silty fine sandstone; lignite present in some shale beds. (4) Limestone lentils. Unit is largely dirty to clayey sandstone (composition 1), but has some cemented sandstone, minor to some clayey interbeds, and minor limestone.

Hardness: Sandstone is largely firm where weathered, largely firm to quite firm where fresh. Calcite-cemented sandstone is hard where fresh, most weathers firm. Clayey interbeds largely firm where fresh and weathered. Limestone hard.

Bedding: Sandstone largely very thick (10-50 ft), called massive (Newton, 1948; Hall, 1958). Some sandstone beds thick to 4 ft (Robinson, 1956), distinct to indistinct, between beds of clayey rock that are thin to medium (Hall, 1958), possibly to very thick. Cemented sandstone in distinct and prominent beds as thick as 30 ft; zones of dominant hard rock as thick as 50 ft or more. Limestone and concretions thin to medium(?).

Parting: Largely absent, some probably at wide to 4-ft spacing.

Fracture: Sandstone has moderate to wide original spacing and typically has close to very close spacing of spheroidal weathering fracture. Cemented sandstone moderate to wide spacing, but some has moderate spacing of weathering fracture. Most clayey interbeds have close to very close spacing of weathering fracture. Limestone probably has close to moderate spacing.

Permeability: In shallow bedrock, intergranular permeability of sandstone low, cemented sandstone and clayey interbeds very low to low; thus, largely low, some very low. Probably some moderate intergranular

permeability below shallow rock. Probably much mantle low to very low, much moderate.

Weathering: Most of unit has spheroidal weathering. Most sandstone is weathered to depths greater than 20 ft, some fresh cores of spheroids at depth of 10 ft.

Surficial mantle: Probably much granular, much clayey.

Expansivity: Probably most bedrock unexpansive, some expansive. Probably much mantle severely expansive, much significantly expansive to possibly unexpansive. Sample HAY3, uncracked clayey sand soil, probably typical, free swell 84 percent.

Stratigraphic thickness: About 250 ft (Hall, 1958); 410 ft (Newton, 1948).

Sources: Hall, 1958; Newton, 1948; Robinson, 1956; two stations.

MAP UNIT 389

Geologic unit, (age), and location: Oursan Sandstone (T) of the Monterey Group, only between Niles Canyon and Calaveras Reservoir, east of Fremont.

Summary: Largely clay-saturated, fine-grained sandstone grading to sandy mudstone, much showing spheroidal weathering, unbedded to indistinctly bedded, largely unparted. Minor to some hard calcite-cemented sandstone. Minor to some bedrock and some mantle is severely expansive.

Expression in aerial photographs: Intermediate topography, largely nonresistant swale-former between more resistant units 508 and 532. Smooth texture, in places very subtly banded by largely light-toned zones about 50 ft in width. Near Morrison Canyon forms uniform, relatively resistant band 200 ft in width.

Composition: (1) Sandstone, fine to medium grained, clay saturated, weathers spheroidally; sand is moderately to moderately well sorted. (2) Mudstone to sandy mudstone. (3) Sandstone undersaturated by clay. (4) Calcite-cemented fine- to medium-grained sandstone. (5) To east of Calaveras fault, abundant calcite-cemented fossiliferous beds, medium to thick, as well as conglomerate of well-sorted and well-rounded chert pebbles, interbedded with sandstone (Hall, 1958). Unit is largely (as much as 80 percent or more) clayey fine sandstone, composition 1; some (as much as 20 percent) is less clayey sandstone, composition 3; in places some mudstone, composition 2, and as much as 5 percent or more cemented sandstone, composition 4. Composition 5, which occurs only east of Calaveras fault, constitutes minor to some of unit there.

Hardness: Clayey sandstone (composition 1) ranges from firm to quite firm and hard where weathered, probably largely firm, but variably abundant quite firm to hard beds in places make up most of unit. Material that is firm where weathered is probably firm to hard where fresh; harder weathered material is probably hard where fresh, judging from cores of spheroids. Mudstone is firm, probably both where fresh and weathered, but some weathers soft. The less clayey sandstone (composition 3) is firm where weathered, probably firm where fresh. Calcite-cemented sandstone and some clayey sandstone is hard where fresh and weathered.

Bedding: Unbedded to indistinctly bedded at thin to very thick (as much as 20 ft or more), much at medium to thick (Hall, 1958). Indistinct bedding is revealed by variations in grain size, spacing of weathering fracture, and expansivity cracks.

Parting: Little present.

Fracture: Most clayey sandstone is spheroidally weathered along close to 5-ft, mostly moderate to wide, original spacing; weathered parts are reduced to close to very close spacing. Some more resistant, harder beds of clayey sandstone and less clayey sandstone have close to moderate spacing and do not weather spheroidally. Calcite-cemented rock has moderate to wide spacing.

Permeability: In shallow bedrock, low to very low intergranular permeability, much of each, but most shallow rock has low fracture permeability. Probably some moderate intergranular permeability below shallow rock. Probably most mantle low, some very low, some moderate.

Weathering: Spheroidal weathering characterizes most of unit and generally extends to depths greater than 15 ft; fresh hard to quite firm corestones remain in this interval. Much mudstone appears to be weathered to soft clayey material to depth of 30 ft, but this may be restricted to rapidly weathering surfaces of cuts. Some calcite-cemented sandstone is fresh and hard at depth of 6 ft.

Surficial mantle: Probably largely clayey, some granular. Over clayey sandstone, much of soil is similar to sample NL12, but includes some black clay, such as sample NL10.

Expansivity: Most bedrock may be significantly expansive, minor to some severely expansive (mudstone). Most mantle significantly expansive, some severely expansive. Bedrock samples: NL11A, moderately cracked weathered mudstone, free swell 100 percent; NL11B, mildly cracked weathered mudstone, free swell 101 percent. About half of weathered mudstone is uncracked and about half mildly cracked, such as sample NL11B; locally moderately cracked, such as sample NL11A. Surficial mantle samples: NL12, typical uncracked to mildly cracked soil on clayey sandstone, free swell 80 percent (exaggerated); NL10, black clay soil, free swell 131 percent.

Stratigraphic thickness: Averages 250 ft, maximum of 500 ft (Hall, 1958).

Sources: Hall, 1958; five stations.

MAP UNIT 390

Geologic unit, (age), and location: Claremont Shale of the Monterey Group, sandstone member (T), in the East Bay Hills.

Summary: Largely sandstone; most firm, some hard and calcite cemented. Hard blocks as large as 4 ft in diameter. Not blasted. Probably much surficial mantle is expansive.

Composition: Largely sandstone, medium to coarse grained, poorly sorted, nearly saturated by interstitial fines (silt, clay, ash?), some calcite cemented. Includes some siliceous shale and firm shale. In Broadway tunnel, Page (1950) reported fine- to medium-grained sandstone that consists of mostly angular grains of quartz and abundant feldspar. Includes minor diabase dikes that are altered and clayey.

Hardness: Some sandstone is firm to soft where weathered, some is hard and calcite cemented where weathered and fresh; probably most is firm, some hard. Radbruch (1969) reported "generally firm," Page (1950) reported "mainly fairly well consolidated"; hence, probably largely firm fresh and weathered. Siliceous shale hard. Shale has firm pieces and firm to soft rock mass where weathered.

Bedding: Firm sandstone probably in very thick (10-ft or more) beds. Distinct beds of hard sandstone, siliceous shale, and shale are medium to very thick (6 ft). Page (1950) reported that unit is uniform rock, "largely devoid of stratification."

Parting: Largely absent to very wide (10 ft or more). At distinct bedding planes and within shale at close to very close spacing.

Fracture: Spacing in hard sandstone is close to very wide (4 ft). Firm sandstone has close to moderate spacing of weathering fracture on close to wide original fracture spacing apparent in some exposures. Siliceous shale close to moderate spacing; firm shale close to very close. Firm sandstone has close spacing where fresh in many places at Broadway tunnel (Page, 1950). Rock would have been satisfactory for tunneling except for close fracture and diabase dikes (Page, 1950).

Permeability: Sandstone has low intergranular permeability, probably moderate fracture permeability in some shallow rock. Shale has very low intergranular permeability, some has low to moderate fracture permeability in shallow rock. Thus, most bedrock has low intergranular permeability, some very low; probably moderate fracture permeability in some shallow rock. Probably much mantle moderate, much low to very low.

Weathering: To depths greater than 15 ft. Hard sandstone remains hard to near surface.

Surficial mantle: Probably much granular, much clayey.

Expansivity: Most bedrock unexpansive, minor may be expansive (shale). Probably much mantle expansive. See samples for other sandstones of the Monterey Group, such as unit 364. No mention of swelling clays by Page (1950).

Stratigraphic thickness: 130-400 ft (Page, 1950).

Sources: Page, 1950; Radbruch, 1969; Radbruch and Case, 1967; one station.

MAP UNIT 391

Geologic unit, (age), and location: Sobrante Sandstone (T) (restricted in sense of Lutz, 1951) of the Monterey Group, only near southwest flank of Mount Diablo.

Summary: Contains sandstone, conglomerate, clayey and tuffaceous fine sandstone, mudstone, and minor prominent shell reef, all in variable proportions from dominant sandstone to some of all compositions. Largely low permeability, some moderate. Minor to some bedrock and much mantle severely expansive.

Expression in aerial photographs: Mostly occupies valley or nonresistant swale between resistant ridges formed by adjacent units 350 and 343. Near Mount Diablo State Park, includes a sharp resistant crest about 100 ft in width, probably shell breccia; in other areas, nearly half of section forms resistant knobs in places along strike. Along flank of Mount Diablo, forms prominent smooth, rounded, grassy zone between rough, craggy, brush- and tree-covered adjacent units. Unit shows light-toned resistant bands 20-100 ft in width between dark-toned nonresistant bands commonly 20-50 ft, but as much as 200 ft, in width.

Composition: (1) Sandstone, fine to coarse grained, largely medium grained, some coarse, some grit and pebble stringers, much contains tuffaceous clasts. Rock has well-sorted to moderately sorted sand, but most contains tuffaceous fines and clay clogging sufficient to reduce a rock of inherent moderate and lesser high permeability to one of low and lesser moderate permeability. Some coarse-grained sandstone has blue coatings on grains (see unit 400). (2) Fossiliferous sandstone containing abundant oyster shells, pebbly and gritty, coarse grained, much calcite cemented. Limonite stained and cemented in part. In places contains huge blocks (as large as 10 ft in diameter) of foreign material, in particular muddy fine sandstone. (3) Conglomerate of pebbles and some cobbles as much as 4 in. in diameter, most less than 2 in., in low permeability sandstone matrix. (4) Clayey rock, consisting of fine-grained, dirty, clayey, or tuffaceous sandstone, mudstone, and sandy shale. These clayey compositions are gradational and all have weathering fracture; all occur interbedded in typical interbeds, but clayey and tuffaceous sandstone and mudstone also occur as very thick monolithologic intervals.

Proportions are variable. At traverse near Walnut Creek (sample localities WC48, WC49), unit is largely sandstone and clayey sandstone, sandstone dominant to equally abundant; minor conglomerate and mudstone, no shell reef (here included in unit 350). At traverse near Mount Diablo State Park (sample localities D10, D11), unit includes some each of mudstone, clayey sandstone, sandstone, and conglomerate, as well as a shell reef 30 ft thick; thus, unit here contains significantly less sandstone and more mudstone and conglomerate than near Walnut Creek.

Hardness: Sandstone soft to firm where weathered, probably firm where fresh. Shell reefs are firm but contain hard cemented layers. Clayey sandstone largely firm where weathered, some tuffaceous sandstone firm and brittle. Mudstone firm. Concretions hard to firm. Conglomerate is firm and contains largely hard, some firm, pebbles and cobbles.

Bedding: Most sandstone beds, conglomerate beds, and shell reefs are distinct and very thick (10-100 ft). Most mudstone and clayey sandstone occur in distinct very thick (10-ft to more than 60-ft) intervals. Much clayey sandstone is indistinctly internally bedded in medium to 4-ft beds; mudstone is commonly internally distinctly thin bedded, and some contains thin hard sandstone interbeds. Concretions and hard cemented layers in reefs are medium to 4 ft thick.

Parting: On distinct bedding planes (most at spacing greater than 10 ft); within some sandstone beds at moderate to 4-ft spacing; mostly absent in clayey sandstone, conglomerate, and shell reefs; present largely at close spacing in mudstone.

Fracture: In sandstone, spacing ranges from close to 6 ft, mostly moderate to 4 ft; fracture is commonly poorly defined and variable. Firm blocks as large as 6 ft in diameter have been excavated. Clayey sandstone and mudstone have close to wide original spacing and very close to moderate spacing of weathering fracture. Conglomerate spacing wide to 4 ft; shell reef mostly moderate to 4 ft, some blocks as large as 8 ft. All is ripped, some with difficulty.

Permeability: Of shallow sandstone, about one-third or less has moderate intergranular permeability, two-thirds or more low, the result of clay and tuffaceous clogging of otherwise moderate to high permeability rock; most sandstone below shallow rock may be moderate, some high. Shell beds have very low to low intergranular permeability, conglomerate low, clayey sandstone to mudstone low to very low. Thus, shallow bedrock has largely low intergranular permeability, minor to some (possibly as much as one-fourth) moderate, minor to some very low; below shallow rock probably some to much moderate, minor to some high, remainder low to very low. Much mantle very low, much moderate.

Weathering: To depths greater than 25 ft in sandstone; to depths of about 5-10 ft in mudstone; to depth of 15 ft in clayey sandstone that shows weathering fracture.

Surficial mantle: Much clayey, much granular. About half of unit is covered by clayey soil, such as sample D10B. Soils similar to sample D10B are sample WC48, dark sandy clay soil, local constituent, and sample WC55, dark brown sandy clay soil, typical of area of much road damage. The other half of unit is covered by granular soil similar to sample WC52, a clayey sand to sandy clay soil. Lutz (1951) reported that most of unit is covered by adobe.

Expansivity: Most bedrock unexpansive, much may be significantly expansive, minor to some severely expansive (mudstone). Much mantle severely expansive, much unexpansive to significantly expansive. Samples: D10A, well-cracked fine sandy mudstone, free swell 128 percent; D10B, moderately cracked dark clay soil, typical of half of unit, free swell 118 percent; WC48, moderately cracked sandy clay soil, free swell 105 percent; WC55, moderately cracked sandy clay soil, free swell 70 percent; WC52, mildly cracked clayey sand to sandy clay soil, free swell 69 percent.

Stratigraphic thickness: 500 ft (Brabb and others, 1971); 500-1,100 ft (based on measured map width).

Sources: Brabb and others, 1971; Lutz, 1951; seven stations.

MAP UNIT 392

Geologic unit, (age), and location: Sobrante Sandstone (T) of the Monterey Group, only in the East Bay Hills near Pinole Ridge and Oursan Ridge.

Summary: Largely firm, clayey to silty sandstone; some sandy mudstone. In places includes hard sandstone beds as thick as 4 ft. On aerial photographs, nonresistant soft topography. Much to most mantle is severely expansive.

Composition: Largely clayey to silty, fine- to medium-grained sandstone, some sandy mudstone and shale. In Pinole Valley anticline, characterized by iron-stained zones as wide as 1 ft on joints and bedding. Near Briones Reservoir includes: anomalous hard, fine- to medium-grained, tuffaceous sandstone; some clay-free, variably silty medium-grained sandstone; and hard calcite-cemented medium to thick beds and concretions.

Hardness: Clayey sandstone, mudstone, shale, and clay-free sandstone are largely firm, some soft, where weathered and probably firm where fresh; anomalous tuffaceous sandstone near Briones Reservoir is hard and brittle; calcite-cemented beds and concretions are hard. Iron-stained zones in Pinole Valley anticline are probably firm to hard.

Bedding: Variable. In Pinole Valley anticline, Sheehan (1956) reported thick distinct sandstone beds between thin shaly partings; Radbruch and Case (1967) reported largely very thick beds. Near Briones Reservoir, Lutz (1951) measured largely very thick (10- to 50-ft) sequences of massive to indistinctly bedded sandstone (see section). Also near Briones Reservoir, distinct to indistinct medium to very thick (4-ft) beds of tuffaceous sandstone are interbedded with similar thicknesses of clayey sandstone and shale.

Parting: Mostly very wide spacing (10 ft and more), except minor wide spacing where distinct thick beds. Present also in shale at very close spacing and at contacts between sandstone and shale in anomalous distinctly bedded rock near Briones Reservoir.

Fracture: Clayey sandstone has close-spaced weathering fracture on moderate to wide original iron-stained fracture; mudstone and shale have close to very close fracture spacing; firm to hard iron-stained zones in sandstone are moderate to wide; hard tuffaceous sandstone has close to moderate fracture spacing.

Permeability: Clayey sandstone and tuffaceous sandstone have low to very low intergranular permeability, largely low fracture permeability in shallow bedrock. Intergranular permeability of mudstone and shale very low, of rare clay-free medium-grained sandstone as much as moderate. Thus, almost all bedrock has low and very low permeability. Probably much mantle moderate, much low to very low.

Weathering: Silty medium-grained sandstone partly fresh at depths of 10-15 ft.

Surficial mantle: Probably much granular, much clayey.

Expansivity: Probably most bedrock unexpansive, some expansive (mudstone). Much to most mantle severely expansive. Samples: R23, moderately cracked clayey sand soil, free swell 101 percent (exaggerated?); R24, moderately to severely cracked clayey sand subsoil, free swell 81 percent; BV22, mildly cracked clayey sand soil, free swell 100 percent (exaggerated?).

Stratigraphic thickness: About 120 ft (Lutz, 1951).

Sources: Lutz, 1951; Radbruch, 1969; Radbruch and Case, 1967; Sheehan, 1956; three stations.

MAP UNIT 393

Geologic unit, (age), and location: Temblor(?) Sandstone (T), only in Santa Cruz Mountains between Gilroy and Loma Prieta.

Summary: Largely sandstone that is firm, low permeability, and in very thick beds between lesser mudstone interbeds. Minor calcite-cemented rock, but much sandstone crops out as case-hardened very large (6- to 10-ft or more) blocks. Most bedrock and mantle unexpansive, but probably some of each severely expansive.

Expression in aerial photographs: Largely intermediate topography, resistant to subdued, that includes nonresistant saddles; broadly ribbed in many places. Near Sveadal, some hard topography and much resistant intermediate topography includes abundant prominently outcropping rock ribs, 30-100 ft in width, and subdued zones between ribs as wide as 200 ft, all in 1,000 ft of section.

Composition: (1) Sandstone, largely medium to coarse grained, some has very coarse grains, small pebbles, and mud chips; largely moderately to poorly sorted; ranges from somewhat dirty, scaly, low permeability rock to clean moderate permeability rock, largely low permeability but not scaly. (2) Calcite-cemented and lesser silica-cemented zones and concretions in sandstone. (3) Mudstone, some contains limestone nodules. (4) Conglomerate of pebbles to boulders in sandstone matrix. (5) Porcelaneous shale (mismapped). Sandstone is dominant, minor to some mudstone. Minor conglomerate at base of unit, minor cemented rock, and minor porcelaneous shale.

Hardness: Sandstone largely firm where weathered and probably where fresh, much case hardens in outcrop; some sandstone quite firm where weathered, probably difficult ripping. Much sandstone is soft where well weathered (within several feet of ground surface). Cemented rock and limestone nodules are hard, mudstone firm, conglomerate probably firm with hard clasts.

Bedding: Sandstone largely in very thick beds, many thicker than 10 ft. Mudstone interbeds thin to very thick.

Parting: In some sandstone at wide to moderate spacing, in most at very wide spacing on distinct bedding planes. Probably largely wide spacing within mudstone.

Fracture: Sandstone has original major fracture at moderate to 5-ft spacing, largely wide, but outcropping blocks are 6-10 ft or more in diameter. Much sandstone has fracture at close to moderate spacing that develops where weathered. Thus, fresh rock and some weathered rock have largely wide spacing, but much weathered rock has close to moderate spacing, especially where well weathered (within 5-10 ft of ground surface). Cemented rock wide to 4 ft, limestone nodules close to moderate. Mudstone has close to very close spacing of weathering fracture, probably moderate to wide original spacing.

Permeability: Intergranular permeability in sandstone largely low, some moderate; mudstone very low; cemented sandstone low to very low; conglomerate probably low. Thus, bedrock has largely low intergranular permeability, some moderate, some very low. Most mantle moderate, some very low to low.

Weathering: Sandstone commonly weathers to depths of more than 10 ft. Most sandstone case hardens in outcrop.

Surficial mantle: Largely granular, some clayey. Largely uncracked sand and clayey sand soils, in places much clayey subsoil.

Expansivity: Bedrock largely unexpansive, but minor to some severely expansive (mudstone). Most mantle unexpansive, some probably severely expansive (subsoil). Samples: MMD11, weathered mudstone, may be typical of mudstone and clayey subsoil but may be anomalous, free swell 92 percent; MMD13, dark clayey subsoil, probably on unmapped Monterey Group, free swell 70 percent.

Sources: McLaughlin and others, 1971; nine stations.

MAP UNIT 394

Geologic units, (age), and location: San Ramon Sandstone (T); Kirker Formation of Primmer (1964), sandstone member (T); only in the East Bay Hills near Briones Reservoir.

Summary: Consists of two adjacent geologic units, described separately below; both occur in bands of about equal width, the San Ramon Sandstone adjacent to unit 435. For the combined map unit, most bedrock is unexpansive, some is probably expansive; most mantle is significantly expansive, some severely expansive. Intergranular permeability in bedrock is largely low, minor to some very low; much mantle moderate, much low to very low. Much mantle is granular, much clayey.

San Ramon Sandstone

Summary: Firm sandstone, some in concretionary resistant beds, most is nonresistant dirty sandstone; minor tuffaceous siltstone. Forms resistant ridge, but little outcrop. On aerial photographs, largely light-toned bands, some dark. No blasting necessary (Radbruch and Case, 1967). Typical soil is significantly expansive.

Composition: Largely fine- to medium-grained sandstone, some tuffaceous; includes both relatively clean, concretionary beds that crop out in places and dirty sandstone that produces weathering fracture. Largely the dirty sandstone. Concretions are calcite cemented, elongate, mostly medium but some large. Includes one bed of white tuffaceous siltstone or tuff.

Hardness: Sandstone largely firm; resistant beds are firm to quite firm, some possibly hard (Radbruch and Case, 1967) weathering firm. Siltstone firm. Concretions hard.

Bedding: Concretionary sandstone and dirty sandstone indistinctly interbedded in beds of unknown thickness. Tuffaceous siltstone as one dis-

tinct very thick (5- to 25-ft) bed. Radbruch and Case (1967) reported beds thin to 5 ft.

Parting: Absent to rare.

Fracture: Resistant sandstone generally has moderate to close spacing; dirty sandstone has close to moderate spacing of weathering fracture on moderate to wide spacing of iron-stained original fracture. Siltstone has very close to moderate spacing of weathering fracture. Some or more sandstone weathers spheroidally.

Permeability: Low intergranular permeability in bedrock. Most mantle moderate.

Weathering: To depths greater than 10 ft.

Surficial mantle: Largely granular. Mildly cracked clayey sand soil, such as sample BV25, is typical. Radbruch and Case (1967) reported rocky loam soil less than 1 ft in thickness.

Expansivity: Most bedrock unexpansive. Most mantle significantly expansive. Sample BV25, mildly cracked clayey sand soil, free swell 74 percent.

Stratigraphic thickness: Maximum thickness of 250 ft reported by Pease (1954), quoted by Radbruch and Case (1967).

Sources: Radbruch, 1969; Radbruch and Case, 1967; one station.

Sandstone member of Kirker Formation of Primmer (1964)

Summary: In large part resistant tuffaceous sandstone, crops out, forms ridge, most hard. Includes some firm mudstone. On aerial photographs, forms resistant white band. No blasting necessary (Radbruch and Case, 1967). Most mantle and probably some bedrock is expansive.

Composition: Lower part of unit is largely fine- to medium-grained tuffaceous sandstone that weathers to a distinctive light gray, but contains some tuff and minor siltstone and conglomerate (not seen); minor sandstone has enough silt and clay to weather spheroidally. As one moves upward through unit, shale partings are reported to interrupt the sandstone, grading upward to massive mudstone interbedded with tuffaceous sandstone. Most of unit is tuffaceous sandstone, some mudstone, minor siltstone and conglomerate.

Hardness: Sandstone firm to hard, most hard; siltstone firm pieces. Conglomerate has hard clasts. Mudstone probably has firm pieces, weathering firm to soft; tuff firm.

Bedding: Prominent tuffaceous sandstone in distinct thick to very thick (as much as 10-ft or more) beds. Other beds thin to very thick, some laminated.

Parting: About half of sandstone has parting at close to wide spacing; remainder has parting on bedding planes mostly at very wide spacing (as much as 10 ft or more).

Fracture: In sandstone, mostly moderate spacing, ranging from close to wide. Radbruch and Case (1967) reported prominent moderate to wide fracture spacing perpendicular to bedding in sandstone. Minor sandstone weathers spheroidally by close to very close spacing of weathering fracture on close to moderate original spacing. Siltstone has close to very close spacing. Mudstone and tuff probably have close to very close spacing of weathering fracture.

Permeability: Bedrock has largely low intergranular permeability (sandstone), some very low (mudstone). Most mantle low to very low.

Weathering: To depths greater than 10 ft, but may not have much effect on rock properties.

Surficial mantle: Largely clayey. Soil on ridge over tuffaceous sandstone is generally thin (less than 1 ft) and like sample BV24. Soil on mudstone is 1-3 ft thick, clayey, no sample.

Expansivity: Most bedrock unexpansive but some is probably expansive (mudstone). Most mantle expansive, some to most of this severely expansive. Sample BV24, mildly cracked sandy clay soil, free swell 83 percent. No expansivity mentioned by Radbruch and Case (1967).

Stratigraphic thickness: Pease (1954), quoted by Radbruch and Case (1967), showed maximum of 250 ft.

Sources: Lutz, 1951; Radbruch, 1969; Radbruch and Case, 1967; one station.

MAP UNIT 399

Geologic unit, (age), and location: Sandstone (T), near San Antonio Creek and on Burdell Mountain in Marin highlands.

Summary: Sandstone interbedded with mudstone, proportions uncertain. Minor hard calcite-cemented sandstone. Probably much bedrock and most mantle is significantly expansive.

Expression in aerial photographs: At Burdell Mountain, steep intermediate topography. Near San Antonio Creek, largely intermediate topography, some soft, some crude light-toned resistant bands; much appears similar to the exposure studied in field.

Composition: Sandstone interbedded with mudstone. Sandstone is largely fine to very fine grained, moderately to poorly sorted, and contains some interstitial silt. Much sandstone is tuffaceous and some is calcite cemented. Minor coarse-grained to very coarse grained sandstone that contains silt-saturated matrix and fossil debris occurs at base and as intrusive dikes; much of this sandstone is calcite cemented and some is conglomeratic. Mudstone ranges from silty claystone to siltstone. Proportions uncertain. In area near San Antonio Creek, probably much sandstone, much mudstone. Exposure on Burdell Mountain not seen in field, reported to be largely sandstone (J.A. Bartow, written commun., 1972).

Hardness: Fine sandstone is firm where weathered except hard where calcite cemented. Coarse-grained calcite-cemented sandstone is hard where weathered; mudstone is firm where fresh and where weathered, but rock mass is firm to soft owing to very close fracture.

Bedding: Distinct where sandstone beds present. Sandstone beds range from thin, where within very thick mudstone, to as thick as 15 ft. Much fine sandstone is laminated.

Parting: Very close spacing in laminated fine sandstone and in some mudstone, but most mudstone weathers spheroidally. Present at distinct bedding planes. Absent in very thick sandstone and in coarse-grained sandstone.

Fracture: In sandstone, wide to moderate spacing, except in laminated sandstone that produces parallel parting, where spacing is close. In mudstone, spacing is very close in both fresh and weathered rock; most weathered mudstone shows spheroidal weathering.

Permeability: Intergranular permeability of sandstone probably low, mudstone very low. Probably low fracture permeability in shallow mudstone. Probably most mantle low near San Antonio Creek, probably much to most moderate on Burdell Mountain.

Weathering: To depths of 20-25 ft.

Surficial mantle: Probably largely clayey near San Antonio Creek, probably much to most granular on Burdell Mountain. Typical soil on hill near San Antonio Creek is silty clay containing sand.

Expansivity: Probably some to much bedrock and much to most mantle is significantly expansive. Samples P1B, mudstone, probably more expansive than most, free swell 55 percent; P1A, typical silty and sandy clay soil, free swell 53 percent.

Sources: J.A. Bartow, written commun., 1972; Blake and others, 1974; one station.

MAP UNIT 400

Geologic unit, (age), and location: Neroly Sandstone (T), only in the Livermore Valley area.

Summary: About equally abundant sandstone and clayey rock (including clayey sandstone). Most rock firm. Minor, locally some, calcite-cemented rock. Some or more bedrock and much mantle is severely expansive.

Expression in aerial photographs: Stands out prominently above unit 354. Hard to intermediate topography, some sharp crests and regular ribbing. Banded by light-gray and dark-gray zones 20-100 ft in width, mostly 20-50 ft. Character of hogbacks is distinctive; light photographic tone, in places shows prominent coarse ribbing.

Composition: (1) Sandstone, mostly medium grained, ranging from fine to coarse grained, well to moderately well sorted; tuffaceous clasts and matrix in some. Sandstone is andesitic and has blue grain coatings of montmorillonitic clay (Snow, 1957, p. 38) and (or) opaline material (Huey, 1948, p. 43; Reiche, 1950, p. 5) that are characteristic of Neroly Sandstone; montmorillonite in blue coatings is not free clay. Sand grains subangular to angular (Huey, 1948; Reiche, 1950; Snow, 1957). (2) Sandstone, clay coated (free clay), brown (rather than blue), fine to coarse grained, much medium to coarse grained, well to moderately well sorted. Varies from clean (no clay) to nearly clay clogged. (3) Calcite-cemented sandstone and concretions that commonly occur in zones. (4) Clay- or tuff-saturated sandstone, fine to coarse grained, well to moderately well sorted. (5) Clayey fine-grained sedimentary rock, including mudstone, siltstone, clayey fine sandstone, sandy mudstone, and sandy claystone; most is silty to fine sandy, much tuffaceous. (6) Porcelaneous to subporcelaneous mudstone, some shale. (7) Conglomerate of well-rounded andesitic pebbles to cobbles, some boulders, scattered to tightly packed in matrix of clean to clay-coated, fine- to coarse-grained sandstone similar to compositions 1 and 2. Grades to pebbly sandstone. Some is calcite cemented. (8) Limestone in beds and nodules (Reiche, 1950). (9) Tuff (Condit, 1938), probably highly tuffaceous siltstone or mudstone, and beds of swelling bentonitic clay (Snow, 1957; Hansen, 1964).

Unit includes much of both sandstone (compositions 1, 2, 3, 7) and clayey rock (compositions 4, 5, 6). Estimates for entire unit vary from about three-fourths sandstone (Snow, 1957) to three-fourths clayey rock at sample locality AA7; a reasonable estimate of total composition is about equally abundant sandstone and clayey rock, sandstone dominant (two-thirds or more) near base, clayey rock dominant toward top. Calcite-cemented rock and porcelaneous mudstone are generally minor, as much as 12 percent in places. Limestone and tuff minor. Conglomerate minor overall, locally makes up most of section in intervals as thick as several hundred feet (Anderson and Pack, 1915).

Hardness: Blue sandstone (composition 1) firm where weathered and probably where fresh, friable to some degree; brown clay-coated sandstone (composition 2) soft, some firm, where weathered, probably soft to firm where fresh. Conglomerate firm to soft, contains hard clasts. Clayey materials (compositions 4, 5) firm where weathered and probably where fresh. Porcelaneous mudstone hard to firm where fresh and weathered. Calcite-cemented sandstone and conglomerate, concretions, and limestone are hard.

Bedding: Ranges from thick to very thick (as much as 60 ft or more), of which some or more is 6-30 ft, some or more thick to 6 ft. Both sandstone and clayey fine-grained rock occur in part in 30- to 60-ft beds, some persistent along strike (Reiche, 1950). Sandstone beds are commonly internally indistinctly bedded or crossbedded; some mudstone intervals are indistinctly internally bedded at medium to thick. Much bedding is lenticular and irregular, especially conglomerate bodies. Bedding planes between sandstone and siltstone vary from distinct to indistinct; an estimated half of contacts are gradational, half sharp, and all contacts are commonly very irregular. Thus, less than half of bedding planes serve as potential slip surfaces for cut-slope failure, but half or more are probably effective for ripping. Calcite-cemented beds as thick as 8 ft, concretions to large; limestone beds and nodules to medium.

Parting: Absent within beds. Present on less than half of wide-spaced to very wide spaced bedding planes in sense of planes for cut-slope failure; present on more than half of bedding planes for ripping. Thus, mostly very widely spaced. Calcite-cemented sandstone parted internally at moderate to wide.

Fracture: Distinct fracture in sandstone, in contrast to indistinct and irregular fracture in Domengine Sandstone (for example, units 343 and 344). Moderate to wide spacing, some as much as 4 ft, in sandstone and calcite-cemented sandstone (compositions 1, 2, 3), much about perpendicular to bedding. Wide to 4-ft spacing in conglomerate. Clayey rock (compositions 4, 5) has very close to moderate, most close to very close, spacing of weathering fracture on probably moderate to wide original spacing. Porcelaneous mudstone has very close to moderate spacing.

Permeability: Sandstone and conglomerate (compositions 1, 2, 7) have much of both moderate and low intergranular permeability, probably about equally abundant in shallow rock, and minor high; clayey rock (compositions 4, 5, 6) low to very low, much of each; cemented rock very low to low. Thus, shallow bedrock has about one-fourth or less moderate, one-half low, one-fourth very low; possibly much moderate below shallow rock. Much mantle very low, much moderate.

Weathering: Blue sandstone unchanged by weathering to near ground surface; brown clayey sandstone weathered to depths greater than 20 ft. Clayey rock shows weathering fracture. In sandstone, weathering frees clay of tuffaceous component, but apparently does not significantly affect blue clay coatings.

Surficial mantle: Much clayey, much granular. Some of both fluffy dark clay soil, such as sample MDW10, and clayey sand soil, such as sample BHY1. Also some brown, very sandy clay soil, such as sample MDW19B. Granular soil occurs largely over topographic highs, clayey soil in lower areas. Snow (1957) reported blue-black soils.

Expansivity: Much bedrock is unexpansive; much is expansive, including some or more that is severely expansive. Much mantle severely expansive, much unexpansive to significantly expansive. Bedrock samples: AA7, well-cracked plastic sandy claystone from 25-ft bed, free swell 120 percent; MDW11, moderately cracked sandy claystone from 6-ft bed, free swell 98 percent; MDW16, moderately cracked sandy mudstone, typical of much of unit, free swell 100 percent (exaggerated); MDW18, moderately cracked sandy mudstone, typical of most expansive 10 percent of unit, free swell 104 percent; MDW19A, mildly cracked mudstone, probably typical of mudstone, free swell 95 percent. Reiche (1950) reported 50 percent montmorillonite in clays of this unit. Surficial mantle samples: MDW10, clay soil, free swell 157 percent (exaggerated?); BHY1, clayey sand soil, free swell 90 percent (exaggerated); MDW19B, sandy clay soil, free swell 95 percent.

Stratigraphic thickness: Maximum of 2,500 ft (Brabb and others, 1971); 931 ft at pumping plant near Tracy (Hansen, 1964); 750 ft near Mountain House (Snow, 1957); 2,000 ft or more (Geological Society of Sacramento, 1959).

Sources: Anderson and Pack, 1915; Brabb and others, 1971; Condit, 1938; Geological Society of Sacramento, 1959; Hansen, 1964; Huey, 1948; Reiche, 1950; Snow, 1957; 14 stations.

MAP UNIT 401

Geologic unit, (age), and location: Neroly Sandstone (T), only along southwest flank of Mount Diablo.

Summary: Largely clayey and tuffaceous sandstone and mudstone, minor to locally some relatively clean sandstone and cemented pebbly shell breccia. Blasting necessary in very thick shell breccia. Some bedrock and most mantle severely expansive.

Expression in aerial photographs: Largely intermediate crests; indistinctly banded in light and dark tones. Where clear, both light- and dark-toned bands are about 10-50 ft wide. Unit is lower and less resistant than units 350 and 354, very similar in appearance to unit 134. Toward north (Shell Ridge), develops strong hogback topography in which shell beds form knife-edge crests.

Composition: (1) Relatively clean sandstone, fine to coarse grained, mostly medium grained, well to moderately well sorted; most has blue clay coatings (see unit 400); low to moderate permeability depending on degree of clay filling. Grades to (2) clayey and (or) tuffaceous sandstone, largely fine to medium grained but some coarse grained, ranges from well-sorted but clay-clogged rock to moderately or poorly sorted rock approaching sandy claystone, mostly of low permeability but commonly includes very low permeability material. Tuffaceous components occur both as clasts and in matrix. (3) Clayey fine-grained rock, variably tuffaceous, including mudstone, siltstone, high-matrix very fine grained

sandstone, and sandy mudstone. Grades to (4) porcelaneous to subporcelaneous mudstone. (5) Conglomerate to pebbly sandstone, in coarse-grained sandstone matrix of low to moderate permeability. Boulder conglomerate at base of unit, otherwise largely pebble and some cobble conglomerate, largely of well-rounded porphyritic andesitic clasts. (6) Shell breccia and pebble conglomerate in sandstone matrix, cemented to partially cemented by calcite. (7) Calcite-cemented clean sandstone and siltstone. (8) Brown lithic tuff (Webb and Woodburne, 1964). (9) Tuffaceous fine sandstone, hard. (10) Concretions in clean and clayey sandstone, calcite cemented.

Unit is largely clayey sandstone (composition 2) and clayey fine-grained rock (composition 3), but includes minor to locally some relatively clean sandstone (composition 1) and minor to locally some conglomerate and porcelaneous mudstone. Shell breccia is generally minor, but near Shell Ridge constitutes some of unit, associated with sharp crest. Other compositions are minor. Unit probably averages more than half clayey sandstone (composition 2), one-third clayey fine-grained rock (composition 3), the remainder clean sandstone and conglomerate.

Hardness: Clean sandstone is firm to soft where weathered; clayey and (or) tuffaceous sandstone ranges from soft to quite firm, some brittle, but is mostly firm, some soft, where weathered and probably firm to quite firm where fresh; clayey fine-grained rock (composition 3) is firm where weathered, probably firm where fresh; porcelaneous to subporcelaneous mudstone is hard to firm where fresh and weathered. Where weathered, conglomerate is largely firm, some probably soft, containing hard to firm clasts. Shell breccia is hard to firm, much quite firm, in tough, coherent blocks. Calcite-cemented sandstone and siltstone are hard fresh, sandstone weathers firm. Lithic tuff probably firm. Concretions hard.

Bedding: Interbedding largely at two different scales: (1) major compositional changes at very thick (commonly 6 ft to a few tens of feet, less commonly as much as 100 ft or more); and (2) somewhat repetitive interbedding at thin to very thick (6 ft), in packets similar in thickness to the major compositional changes. One band of conglomerate as thick as 120 ft or more. Brown lithic tuff 4-20 ft thick, possibly other tuff to thick. Pebbly shell breccia near Shell Ridge as thick as 150 ft or more, within which sandstone grades in and out of shells and conglomerate. Hard calcite-cemented sandstone and shell breccia medium to 40 ft in thickness. Lenticular form of conglomerate beds, as well as crossbedding (without parting) within sandstone and pebbly sandstone, are characteristic. Concretions medium to large.

Parting: Present at distinct bedding contacts, absent within beds. Thus, present largely at very wide spacing (more than 6 ft), but at close to 4-ft spacing in 10-25 percent of unit. Near shell breccia, may lack parting over 250-ft interval.

Fracture: Clean sandstone has moderate to wide original spacing, some close to moderate spacing of weathering fracture; clayey and (or) tuffaceous sandstone has moderate to 5-ft, mostly moderate to wide, original spacing, and most has very close to moderate spacing of weathering fracture, some spheroidal. Clayey fine-grained rock has close to very close spacing of weathering fracture, as does porcelaneous mudstone. Unknown, possibly absent, in conglomerate. Shell breccia ranges from moderate to 8-ft spacing, mostly wide to 4 ft, some showing firm spheroidal weathering rind on moderate to wide hard cores. Other hard sandstone has spacing to moderate, concretions to wide.

Permeability: Intergranular permeability in clean sandstone is low to moderate; clayey and (or) tuffaceous sandstone largely low, some very low, and some may be moderate below weathering zone; clayey fine-grained rock largely very low, some low; porcelaneous mudstone has very low intergranular permeability, probably low fracture permeability in shallow rock; conglomerate and pebbly sandstone low to lesser moderate; shell breccia low to very low, depending on degree of cementation; other compositions low to very low, except probably moderate in weathered calcite-cemented sandstone. Thus, most bedrock has low and very low permeability; minor to locally some moderate, especially below weathering zone. Most mantle very low, some moderate.

Weathering: Relatively clean sandstone, including sandstone of low permeability, weathered to depths greater than 25 ft. Clayey and (or) tuffaceous sandstone weathered to depths of 6-15 ft or more; some shows spheroidal weathering and much has weathering fracture. Shell breccia fresh to near surface in places, elsewhere develops spheroidal weathering. Some calcite-cemented beds weather firm, some are fresh to outcrop or near outcrop. Thus, much weathering fracture in unit; possibility of clay clogging of clean sandstone in weathered zone.

Surficial mantle: Largely clayey, some granular, different soils at different localities. On traverse at sample localities D4-D6, much dark sandy clay, such as sample D4, and much light sandy clay, such as sample D6. On traverse at sample locality TJ2, most is dark sandy clay soil, such as sample TJ2C, but some is dark clayey sand soil on sandstone, such as sample TJ2B. Also, sticky clay subsoil on tuffaceous fine sandstone, such as sample WC46, and sandy clay soil that is typical near shell breccia, such as sample WC60.

Expansivity: Much to most bedrock significantly expansive, some severely expansive, some unexpansive. Most mantle severely expansive. Bedrock samples: D5A, mildly to moderately cracked weathered mudstone, typical of mudstone, free swell 83 percent; D5B, mildly cracked weathered clayey sandstone, typical, free swell 71 percent; TJ2A, mildly cracked weathered clayey sandstone or sandy claystone, typical, free swell 91 percent. Surficial mantle samples: D4, mildly cracked dark sandy clay soil, free swell 88 percent; D6, uncracked light sandy clay soil, free swell 84 percent; WC60, sandy clay soil, typical near shell breccia, free swell 69 percent; TJ2C, moderately cracked dark sandy clay soil, free swell 121 percent; TJ2B, mildly cracked dark clayey sand soil on sandstone, free swell 90 percent (exaggerated); WC46, sticky clay subsoil on tuffaceous fine sandstone, free swell 100 percent.

Stratigraphic thickness: Maximum thickness 2,500 ft (Brabb and others, 1971); about 3,000 ft (Weaver, 1944); 1,000-2,500 ft estimated from map.

Sources: Brabb and others, 1971; Weaver, 1944; Webb and Woodburne, 1964; seven stations.

MAP UNIT 402

Geologic unit, (age), and location: Neroly Sandstone (T), only near San Ramon Creek, west of Mount Diablo.

Summary: About half firm sandstone of low to moderate permeability and moderate to wide fracture spacing, about half interbedded firm high-matrix fine-grained sandstone to mudstone. Both compositions occur in both very thick (6- to 60-ft) beds and in medium to thick interbedded sequences. Minor conglomerate. In places, cemented shell beds thick to 4 ft, mostly wide fracture, rip with difficulty. Probably minor to some bedrock and some mantle are severely expansive.

Expression in aerial photographs: Includes much of both prominent, resistant intermediate topography and valley bottom.

Composition: (1) Sandstone, largely medium grained, some coarse grained, rare very coarse grained, well to moderately well sorted, largely clean, some tuffaceous producing low permeability, much has typical blue coatings on grains (see unit 400). In places contains calcite-cemented shell beds that form resistant ridges. Includes minor concretions to large. (2) High-matrix fine-grained sandstone, tuffaceous, some grading to sandy mudstone. (3) Mudstone to siltstone. (4) Shale. (5) Conglomerate, probably largely of pebbles, well rounded, in probably variably clayey sandstone matrix; and conglomeratic sandstone.

Sandstone (composition 1) is equally abundant to somewhat more abundant than the combination of high-matrix sandstone (composition 2) and mudstone (composition 3). Shale is rare. Conglomerate and conglomeratic sandstone are minor overall, locally some. Some cemented beds in places, absent in others.

Hardness: Firm where weathered and probably where fresh, except hard in cemented shell beds. Clasts in conglomerate are hard.

Bedding: Sandstone occurs largely in distinct very thick (6- to 60-ft) beds, but also some distinct medium to thick beds, ranging from thin to 4 ft, between similar thicknesses of high-matrix sandstone, in intervals as thick as 50 ft or more. High-matrix sandstone and mudstone occur in mostly very thick (10- to 40-ft, some as much as 200-ft) intervals, some or more of which are indistinctly interbedded at medium to thick. Cemented shell beds thick to 4 ft. Conglomerate beds mostly medium to thick, locally to very thick, indistinct (no parting).

Parting: Present in about half of sandstone at moderate to 4-ft spacing, much crude but creating slabs. Present at many bedding contacts of sandstone against high-matrix sandstone or mudstone, but largely absent within mudstone and high-matrix sandstone intervals. Absent on conglomerate-sandstone contacts. Thus, parting at moderate to 4-ft spacing in about one-third of unit, very wide in two-thirds of unit.

Fracture: Clean fracture in sandstone at moderate to wide spacing, some to 4 ft. In mudstone and high-matrix sandstone, very close to moderate, mostly close, spacing of weathering fracture on moderate to wide original spacing. Hard cemented shell beds have mostly wide fracture, but some oversize blocks as large as 8 ft by 4 ft. Hard cemented beds are ripped, probably with difficulty (numerous ripper marks).

Permeability: Sandstone has largely low intergranular permeability, about one-third moderate, rare high in coarse-grained and very coarse grained beds; high-matrix sandstone and mudstone low to very low. Thus, most bedrock low, some very low, some moderate, minor high. Probably much mantle very low to low, much moderate.

Weathering: Weathering fracture extends to depths greater than 15 ft; sandstone uniform to depths greater than 30 ft.

Surficial mantle: Probably much clayey, much granular.

Expansivity: Much to most bedrock unexpansive, probably some to much significantly expansive, probably minor to some severely expansive. Probably some mantle severely expansive, some significantly expansive, some unexpansive. Sample: LTR25, clayey sand soil on sandstone, free swell 41 percent. See samples for unit 401.

Stratigraphic thickness: See unit 401.

Sources: Three stations. See sources for unit 401.

MAP UNIT 403

Geologic unit, (age), and location: Neroly Sandstone (T), only near southern end of Yolo Range.

Summary: Interbedded sandstone and tuffaceous siltstone, mostly firm but contain some hard beds. Severely expansive soil over tuffaceous siltstone.

Composition: Sandstone interbedded with tuffaceous siltstone or fine ash tuff. Sandstone is well sorted, clean, well rounded, and contains as much as 10 percent silt; it varies in grain size from fine to very coarse, commonly medium grained, but contains rare fine gravel. Minor sandstone is calcite cemented. Interbeds are of silt-size material, largely tuffaceous, some containing fine sand. Proportions unknown; sections suggest that most is clayey rock, some sandstone.

Hardness: Mostly firm sandstone and tuffaceous siltstone. Some sandstone is calcite cemented and hard, and some sandstone beds are in part hard without detectable calcite cement. Some hard zones and concretions occur within tuffaceous siltstone.

Bedding: Many contacts are gradational and indistinct; some are sharp and distinct, especially from a distance where bedded character is clear. Sandstone beds are thick to very thick (15 ft), in intervals as thick as 40 ft; tuffaceous siltstone beds are thin to more than 20 ft, in intervals as thick as 60 ft or more. See sections by Olmsted and Davis (1961) and Thomasson and others (1960).

Parting: Not common, because many bedding contacts are gradational. Some parting in sandstone at moderate to wide(?) spacing.

Fracture: Sandstone has moderate to wide spacing of original fracture and close to moderate spacing of weathering fracture. Tuffaceous siltstone has moderate original spacing and close to very close spacing of weathering fracture.

Permeability: Sandstone has mostly moderate intergranular permeability, some high; tuffaceous siltstone low to very low intergranular permeability, but probably low fracture permeability in shallow rock. Thus, probably much to most bedrock has low to very low intergranular permeability, some moderate, minor high; much low fracture permeability in shallow rock. Much to most mantle very low, some to much moderate.

Weathering: To depths greater than 6 ft.

Surficial mantle: Much to most clayey, some to much granular. Clay soil, such as sample A5, over tuffaceous siltstone. Soil is relatively deep (2 ft or more).

Expansivity: Much to most bedrock may be significantly expansive where weathered. Much to most mantle severely expansive, some unexpansive. Sample A5, clay soil, free swell 123 percent.

Stratigraphic thickness: 300 ft near Vacaville (Weaver, 1949).

Sources: Olmsted and Davis, 1961; Sims and others, 1973; Thomasson and others, 1960; Weaver, 1949; three stations.

MAP UNIT 404

Geologic unit, (age), and location: Briones Sandstone (T), only in the East Bay Hills between Pleasant Hill and Las Trampas Ridge.

Summary: Not seen in field. Occurs in two areas: (1) Strip on west side of Franklin fault, west of Walnut Creek. Here stratigraphic relations make this unit of uncertain character—from one direction seems to coincide with unit 432, from other direction with unit 405. In this vicinity siliceous shales are mapped out, so this unit is probably best approximated as a mixture of units 405 and 432 in about equal proportions; thus, much sandstone, much clayey rock. (2) Body on and around Las Trampas Ridge includes extensions of units 330, 331, and 502 (Monterey Group as mapped by Ham, 1952). Thus, this body is probably largely sandstone.

Expression in aerial photographs: Body west of Walnut Creek includes much of both hard resistant topography and intermediate topography. Body on Las Trampas Ridge has rounded intermediate crests and broad irregular ribs.

Composition and physical properties: Infer from units mentioned above.

Permeability: Probably like unit 405.

Surficial mantle: Probably much granular, much clayey.

Expansivity: Probably much bedrock and mantle unexpansive, much expansive including some severely expansive.

Sources: Ham, 1952; Trask, 1922.

MAP UNIT 405

Geologic unit, (age), and location: Briones Sandstone, upper part (T), in the East Bay Hills.

Summary: Consists of resistant intervals of very fine grained to medium-grained sandstone and some finer grained rock between nonresistant intervals of interbedded siltstone, mudstone, very fine grained clayey sandstone, shale, and minor clean or silty sandstone beds. Some moderate permeability. Blasting required for trenching(?) in very thick, firm, wide-fractured sandstone. Some to much bedrock and much mantle is significantly expansive, some mantle is severely expansive.

Expression in aerial photographs: Where structure is simple and revealing, unit is distinctly banded, showing light-toned resistant bands 20-250 ft in width between dark-toned nonresistant bands as wide as a few hundred feet.

Composition: Unit consists of resistant and nonresistant intervals, much of each. Resistant intervals are of two types: (1) well sorted and clean to variably silty very fine grained to medium-grained quartzose sandstone, mostly fine grained to very fine grained, interbedded with clayey and silty sandstone having a similar range of grain size; (2) fine-grained to very fine grained sandstone that varies from well sorted and clean to silty and clayey, interbedded with siltstone and silty mudstone. Nonresistant intervals consist of interbedded siltstone, mudstone, very fine

grained clayey sandstone, and shale, some of each, and occasional clean or silty sandstone beds. Unit includes hard calcite-cemented beds and concretions mostly to thick, rarely as thick as 8 ft, and minor lenses of grit and fine conglomerate. Near San Pablo Dam, contains a 20-ft bed of chert and two beds of cobble conglomerate.

Hardness: Mostly firm pieces where fresh and weathered, but some rock is soft where weathered. Some sandstone is quite firm and is blasted in places, probably to facilitate trenching; rock cuts have been shaped by blades. Includes scattered hard calcite-cemented beds and concretions.

Bedding: Resistant intervals of composition 1 are indistinctly bedded in very thick (10-ft to more than 50-ft) beds. Resistant intervals of composition 2 are distinctly to indistinctly bedded in medium to very thick (10-ft) beds, much in medium to 4-ft beds. Nonresistant intervals are generally indistinctly bedded in either thin to thick beds or in very thick (as much as 30-ft or more) beds, but clean sandstone interbeds are distinct. Both resistant and nonresistant intervals are tens to hundreds of feet thick. Hard calcite-cemented beds and concretions are mostly medium to thick, some as much as 8 ft.

Parting: In composition 1, absent to occasional on bedding planes. In composition 2, on many bedding planes at moderate to 10-ft spacing and locally within 20 percent or more of beds at very close to moderate spacing. In nonresistant intervals, parting occurs on bedding planes (much at close to wide spacing), within some beds, and within shale at very close spacing.

Fracture: Clean and silty sandstone has mostly moderate to wide spacing, ranging from close to very wide (5 ft). Clayey sandstone has mostly close spacing of weathering fracture on moderate to wide iron-stained original spacing. Much spheroidal weathering and scaling in dirty sedimentary rock. Hard calcite-cemented beds and concretions mostly have wide spacing, some moderate.

Permeability: Sandstone has mostly low intergranular permeability, but some moderate where clean; siltstone low; mudstone and shale very low, but possibly low fracture permeability in shallow rock. Thus, most bedrock has low intergranular permeability, some moderate, and some very low. Springs present. Much mantle low to very low, much moderate.

Weathering: Clean and silty sandstone weathered to depth of 30 ft. Dirty sandstone, siltstone, mudstone, and shale are weathered to depths greater than 8 ft, probably 10-20 ft. Much weathering fracture and scaling in these materials.

Surficial mantle: Much granular, much clayey soil or subsoil.

Expansivity: Probably most bedrock unexpansive, some to much significantly expansive. Much mantle significantly expansive, some unexpansive, some severely expansive. Bedrock samples: MI21B, mildly cracked clayey fine sandstone, free swell 70 percent; BN19, shale, free swell 73 percent. Surficial mantle samples: BN24, moderately cracked sandy clay soil, free swell 90 percent; MI30, soil, free swell 78 percent; MI11, mildly cracked fine sandy clay subsoil, free swell 82 percent; MI12, moderately cracked silty clay subsoil, free swell 109 percent.

Stratigraphic thickness: 900 ft (J.R. Wagner, written commun., 1973).

Sources: Ham, 1952; Radbruch, 1969; Radbruch and Case, 1967; Sheehan, 1956; Trask, 1922; J.R. Wagner, written commun., 1973; Wagner, 1978; Weaver, 1944; 11 stations.

MAP UNIT 406

Geologic unit, (age), and location: Monterey Group, sandstone unit (T), only in the East Bay Hills north of Alamo.

Summary: Equally abundant tuffaceous sandstone and sandy mudstone. Minor hard cemented shell beds, minor sandstone of moderate permeability. Probably much bedrock and most mantle is significantly expansive.

Expression in aerial photographs: Intermediate and hard topography, small area.

Composition: Sandstone and sandy mudstone, both tuffaceous. Sandstone is medium to fine grained and has various proportions of matrix, probably tuffaceous mud, producing largely a dirty sandstone of low permeability; also contains less abundant clean well-sorted sandstone, some of which reaches moderate permeability. Minor calcite-cemented shell beds. Sandy mudstone varies from mudstone to high-matrix fine-grained sandstone and includes minor shale, all of very low permeability. About equally abundant sandstone and sandy mudstone. Clean sandstone (no weathering fracture) constitutes as much as 30 percent of unit.

Hardness: Largely firm where weathered and probably where fresh; minor hard cemented shell beds.

Bedding: Largely indistinct and gradational. Some distinct interbedded very thick (10- to 100-ft) beds of sandstone and mudstone; some or more interbedded sandstone, mudstone, and shale in distinct medium to thick beds. Cemented shell beds to thick.

Parting: Largely absent; spacing at moderate to wide on distinct bedding planes in some or more of unit.

Fracture: In dirty sandstone, close to moderate spacing of weathering fracture on moderate to wide original spacing; clean sandstone (as much as 30 percent of unit) retains mostly moderate to wide spacing. Sandy mudstone has close to very close spacing.

Permeability: Sandstone has largely low intergranular permeability, minor moderate; sandy mudstone very low, some possibly low, much probably has low fracture permeability in shallow rock. Thus, much bedrock has low intergranular permeability, minor moderate; much very low, but much of this probably has low fracture permeability in shallow rock. Most mantle low to very low, some moderate.

Weathering: Sandstone weathered to depths greater than 8 ft.

Surficial mantle: Largely clayey, some granular. Most is sandy and silty clay soil, such as sample LTR20; some clay soil and weathered bedrock, such as sample LTR19.

Expansivity: Much bedrock unexpansive, probably much significantly expansive where weathered. Most mantle significantly expansive, probably some severely expansive, some unexpansive. Samples: LTR19, clay soil and weathered bedrock, free swell 75 percent; LTR20, typical dark sandy and silty clay soil, free swell 78 percent.

Sources: Clark, 1918; three stations.

MAP UNIT 407

Geologic unit, (age), and location: Unnamed unit (T), in the East Bay Hills near Pinole.

Summary: Sandstone interbedded with shale, siltstone, and clayey very fine sandstone. Some bedrock and probably some mantle is severely expansive.

Composition: Sandstone, well sorted, fine grained, about 10 percent silt, interbedded with clay shale, silty clay shale, siltstone, and clayey fine-grained sandstone. Approximately 60 percent sandstone, 40 percent clayey rock of which shale is predominant. Contains hard calcite-cemented sandstone.

Hardness: Sandstone soft to firm where weathered, probably firm where fresh. Shale has firm pieces, firm to soft rock mass.

Bedding: Distinct. Sandstone in thick to very thick (10-ft or more) beds between medium to very thick (4-ft) beds of clayey rock; cemented sandstone beds and concretions(?) medium to thick.

Parting: At bedding planes (wide to 10 ft or more), and within shale at very close spacing.

Fracture: Sandstone has moderate spacing, clayey rock close spacing. Hard calcite-cemented sandstone fractured at very wide (4-ft) spacing.

Permeability: Sandstone has moderate to low intergranular permeability, shale very low, clayey fine-grained sandstone and siltstone low. Thus, much bedrock low, some to much moderate, some very low. Probably much mantle moderate, much very low to low.

Weathering: Sandstone weathered to depths greater than 30 ft. Shale gray at about 10 ft.

Surficial mantle: Probably much granular, much clayey. No soil observed.

Expansivity: Most bedrock is unexpansive; much may be expansive, some or more is severely expansive (shale). Probably much mantle unexpansive, much expansive, some severely expansive. Sample R7, well-cracked shale, free swell 131 percent, is most expansive material seen in unit, possibly from unit 118.

Sources: Two stations.

MAP UNIT 408

Geologic unit, (age), and location: Sobrante(?) Sandstone (T) of the Monterey Group, only in the East Bay Hills near Oakland.

Summary: Largely firm, dirty, fine-grained sandstone, siltstone, and silty mudstone. Nonresistant unit. Some bedrock and mantle is severely expansive.

Composition: Largely dirty fine-grained to very fine grained sandstone, siltstone, and silty mudstone, probably some to much of each. Also includes minor medium-grained hard glauconitic sandstone; medium-grained sandstone, moderately well sorted, in part cemented; brittle siliceous shale; concretionary limestone; and altered diabase dikes. Locally includes hard sandstone similar to unit 643 in blocks as large as 10 ft in diameter (probably faulted in).

Hardness: Largely firm pieces where fresh and weathered, firm to soft weathered rock mass. Minor sandstone is hard where weathered and fresh. Sandstone similar to unit 643 is present locally and is hard. Siliceous shale has hard to firm pieces. Limestone hard.

Bedding: Mostly absent to indistinct. Glauconitic sandstone has distinct medium to thick beds. Page's (1950) portal sandstone (moderately well sorted, locally cemented) forms a distinct bed 50-400 ft in thickness.

Parting: Largely absent, possibly rarely present at distinct contacts. Present at very close spacing in siliceous shale (minor constituent).

Fracture: Close to very close spacing of weathering fracture on moderate to wide original iron-stained fracture; some rock flakes where weathered. Hard glauconitic sandstone fractured at close to moderate spacing. Hard sandstone similar to unit 643 occurs in blocks as large as 10 ft in diameter that have internal incipient fracture at very close to very wide (4-ft) spacing, mostly moderate to wide.

Permeability: Largely low intergranular permeability in bedrock; mudstone (some of unit) very low, but some mudstone probably has low fracture permeability in shallow rock. Some bedrock is very wet underground in Caldecott tunnel (Radbruch, 1964), which suggests moderate fracture permeability. Possible minor moderate intergranular permeability in bedrock. Most mantle low to very low.

Weathering: Color change at depths of 20-30 ft, some rock fresh at depth of 20 ft. Weathers from fractures inward.

Surficial mantle: Largely clayey.

Expansivity: Probably much bedrock unexpansive, some may be significantly expansive, some is severely expansive. Some mantle severely expansive, probably most is significantly expansive. Soils range from uncracked to generally mildly cracked to moderately or well cracked; moderately cracked and well-cracked soils occupy about 20 percent of unit. Three samples from the most expansive soils: OE20A, moderately cracked clayey soil, free swell 110 percent; OE20B, clayey weathered bedrock or subsoil, moderately cracked, free swell 100 percent; OE18, clay soil and weathered bedrock, well cracked, free swell 120 percent.

Stratigraphic thickness: As much as about 1,200 ft (J.R. Wagner, written commun., 1973).

Sources: Case, 1963; Page, 1950; Radbruch, 1964, 1969; Radbruch and Case, 1967; J.R. Wagner, written commun., 1973; Wagner, 1978; five stations.

MAP UNIT 409

Geologic unit, (age), and location: San Ramon Sandstone (T), only between Alamo and Walnut Creek, southwest of Concord.

Summary: Widely varying reports of composition; we estimate about half sandstone, half clayey rock. Minor to some sandstone is cemented, probably including much of the prominent ridge noted below. Much mantle is severely expansive.

Expression in aerial photographs: Largely not very resistant, but includes one prominent, hard to intermediate ridge that lacks ribbing. This ridge is underlain by clean sandstone, probably much cemented.

Composition: (1) Sandstone, tuffaceous in part, fine to coarse grained, largely fine to medium grained (Clark (1918) described sandstone as fine grained, Ham (1952) as medium grained); largely moderately sorted (well sorted according to Ham, 1952), but some rock is clean and well sorted and makes up resistant ridge. (2) Calcite-cemented zones and concretions in sandstone. (3) Clayey rock consisting of shale, mudstone, and claystone. (4) Siliceous shale, gray.

Various impressions of proportions. Clark (1918), in measured section, showed sandstone making up all but 20 ft of 523-ft section. Observations at sample locality WC42 suggest one-third sandstone, two-thirds claystone and covered zones. At sample locality WC44, half of unit consists of 80 percent shale and mudstone. Thus, unit is probably about half sandstone (compositions 1, 2) and half clayey rock and siliceous shale (compositions 3, 4). Minor to some sandstone is cemented. Siliceous shale constitutes about 10 percent of clayey half of unit.

Hardness: Sandstone firm to soft where weathered, probably firm where fresh, some possibly quite firm where fresh. Cemented sandstone hard. Clayey rock firm where fresh and weathered. Siliceous shale quite firm to hard.

Bedding: Sandstone occurs as very thick (as much as 30-ft or more) distinct beds between thin to 5-ft shale beds in about half of unit; as distinct thick to 6-ft beds between very thick clayey rock in about half of unit; and some is thinly parted or thinly interbedded with shale. Cemented zones and concretions thin to thick. Siliceous shale occurs in a 20-ft interval, in which lamination is not distinct (Clark, 1918).

Parting: At very wide spacing (as much as 30 ft or more) in most of one-half of unit; at very close spacing (shale) to moderate or wide spacing (mudstone, claystone) in most of other half.

Fracture: Much sandstone has moderate to wide spacing of original cemented fracture, close to moderate spacing of superimposed weathering fracture, and very close scaling on exposed surfaces. Much sandstone in beds less than 6 ft in thickness has wide to 4-ft spacing, which suggests spacing similar to bed thickness. Cemented zones probably have spacing as great as wide. Siliceous shale probably has very close to moderate spacing.

Permeability: Sandstone has largely low intergranular permeability, minor to some moderate; clayey rock, including siliceous shale, has very low intergranular permeability, but siliceous shale has low to moderate fracture permeability in shallow rock. Thus, about half of bedrock has low permeability, half very low, minor to some moderate. Most mantle very low to low.

Weathering: Sandstone weathered to depths greater than 15 ft.

Surficial mantle: Largely clayey. Two samples of soils on clayey rock (about half of unit): WC41, a dark sticky clay soil, and WC42, a dark sticky soil on claystone. Sandy clay soil overlies sandstone in about half of unit.

Expansivity: Much bedrock unexpansive, much expansive of which some may be severely expansive. Much mantle severely expansive, much significantly expansive. Samples: WC41, dark clay soil, free swell 79 percent; WC42, dark clay soil on claystone, typical of half of unit, free swell 102 percent; soil expansivity suggests similar expansivity for claystone bedrock. Sample LTR26, dark clay soil, free swell 68 percent, is typical for the station, which is on strike with the resistant ridge; sandy clay soil on sandstone is probably less expansive.

Stratigraphic thickness: 523 ft near Castle Hill (Clark, 1918); 400 ft at Castle Hill (Ham, 1952).

Sources: Clark, 1918; Ham, 1952; five stations.

MAP UNIT 410

Geologic unit, (age), and location: Markley Formation (T), only in area between Vallejo, Montezuma Hills, and Yolo Range, excluding Potrero Hills.

Summary: Sandstone interbedded with thinly interbedded very fine sandstone, siltstone, mudstone, and shale. Materials are firm to soft, but include enormous hard concretions in sandstone. Near Vacaville, unit is about half massive sandstone and half thinly interbedded materials; here unit has mostly sandy, unexpansive or only mildly expansive mantle and bedrock, but 10-20 percent of mantle is expansive and some shaly bedrock intervals are expansive. Farther south near Jameson Canyon, probably more than half of unit consists of clayey rock, well over half of mantle is significantly expansive, and one-fourth or more of mantle is severely expansive.

Composition: Sandstone interbedded with thinly interbedded very fine grained clayey sandstone, siltstone, mudstone, and shale. Sandstone is medium to coarse grained, poorly sorted, and poorly rounded; most is quite silty (more than 10 percent silt), but some has less than 10 percent silt. Sandstone contains scattered enormous calcite-cemented concretions. Thinly interbedded clayey rock varies from very fine grained sandstone and siltstone to clay shale and mudstone, but all of these materials contain some clay; some chalky siliceous shale reported in middle part of section near Jameson Canyon (Jameson Shale Member of Markley Sandstone of Weaver, 1949, plate 12). Near Vacaville, unit is about half massive sandstone and half thinly interbedded materials. Near Jameson Canyon, probably more than half of unit is thinly interbedded materials.

Hardness: Sandstone is firm to soft where weathered, probably firm where fresh. Fine-grained rock has firm pieces and firm to soft rock mass, both where fresh and weathered; chalky siliceous shale near Jameson Canyon probably quite firm. Concretions in sandstone are hard.

Bedding: Distinctly bedded. Sandstone occurs in massive very thick (10- to 40-ft or more) beds that crop out (rimrock), but also occurs commonly in medium to 10-ft beds between medium to 4-ft thinly bedded intervals. Some very thick sandstone beds have silty partings at very wide spacing and some are indistinctly internally bedded, but typically the very thick sandstone beds are massive and structureless. Concretions are elongate parallel to bedding and as much as 30 ft in length; they are generally thick and as much as 6 ft in width, but some are spherical and as large as 6 ft in diameter. Fine-grained materials between sandstone beds are interbedded in very thin to thin, some medium, beds.

Parting: Present at bedding planes. Mostly absent within very thick sandstone, but some has silty partings at very wide spacing. At very close to close spacing in thinly interbedded intervals of clayey rock.

Fracture: Sandstone shows very wide spacing in most places, moderate to 4-ft spacing in some places, and within 10 ft of the ground surface it may develop fractures at moderate to wide spacing where only very wide spacing exists at depth. Some sandstone develops close spacing of weathering fracture within a foot or two of the ground surface. Interbedded sequences of clayey rock have very close to moderate fracture spacing across bedding. Concretions are mostly unfractured, but some have cross fracture at about 4-ft spacing.

Permeability: Sandstone has low to moderate intergranular permeability, clayey rock low to very low. Thus, intergranular permeability of bedrock is largely low, some moderate, some very low. Most mantle moderate, some very low to low.

Weathering: Sandstone is weathered even in freshly cut stream exposures at depth of about 50 ft. Shale and mudstone may remain gray within 10 ft of ground surface.

Surficial mantle: Largely granular, some clayey. In area near Vacaville, soil is largely silty sand, some (10-20 percent) clayey. Near Jameson Canyon, largely granular but 25 percent or more is clayey.

Expansivity: Probably most bedrock is unexpansive, but much may be expansive and some is severely expansive. Some mantle is severely expansive, the remainder varies from largely unexpansive to largely significantly expansive. In area near Vacaville, most soil is unexpansive, but some shale and 10-20 percent of soil is expansive. These expansive materials are represented by the following samples: E5, mildly cracked shale, free swell 88 percent; A3, mildly cracked sandy clay soil on siltstone, free swell 72 percent; MV22, well-cracked clayey soil, free swell 131 percent. Near Jameson Canyon, well over half of soil appears significantly expansive (expansivity similar to or greater than sample CL1B, clayey sand soil, mildly cracked, free swell 68 percent) and one-fourth or more of soil is severely expansive like samples CL2, clay soil, well cracked, free swell 95 percent, and CL1A, popcorn sandy clay soil, free swell 112 percent.

Stratigraphic thickness: 850 ft or more at Pleasant Creek (Clark, 1938).

Sources: Bailey, 1930; Bartow, 1985; Clark, 1938; Olmsted and Davis, 1961; Sims and others, 1973; Weaver, 1949; 10 stations.

MAP UNIT 411

Geologic unit, (age), and location: Markley(?) Formation (T), only on east side of the East Bay Hills near Walnut Creek.

Summary: Not seen in field, most information from Ham (1952). Largely fine sandstone, shaly sandstone, and shale; minor hard sandstone. Unit is sheared, adjacent to Franklin fault, poor exposure.

Composition: Described as "badly sheared, thinly laminated fine sands with calcite stringers" and Eocene fossils (Ham, 1952). Clark (1918), quoted by Ham, reported fine-grained yellow-brown sandstone over hard, massive, calcareous, gray sandstone, over shaly sandstone and soft argillaceous shale. Proportions unknown; assume unit is largely fine-grained sandstone, shaly sandstone, and argillaceous shale, and that hard sandstone is minor.

Hardness: Probably largely firm, weathering firm to soft. Includes hard calcite-cemented sandstone.

Bedding: Unknown. Much thin-bedded to very thin bedded fine-grained sandstone. Calcite-cemented sandstone probably occurs both as thin to very thin beds and as a very thick bed.

Fracture: Sheared. Most of unit probably has very close to moderate spacing, but hard sandstone probably moderate to wide.

Permeability: Bedrock probably has largely low intergranular permeability, some very low, minor moderate. Probably much mantle moderate, much low to very low.

Weathering: Unknown. Hard sandstone probably fresh to surface or near surface.

Surficial mantle: Unknown, probably much granular, much clayey.

Expansivity: Unknown, probably much to most bedrock unexpansive, some to much expansive. Probably much mantle unexpansive to significantly expansive, some to much severely expansive.

Stratigraphic thickness: About 400 ft (Ham, 1952).

Sources: Bartow, 1985; Clark, 1918; Ham, 1952.

MAP UNIT 412

Geologic unit, (age), and location: Markley Formation, upper sandstone member (T), in the monocline north of Mount Diablo.

Summary: Not much confidently known about this unit, probably includes much sandstone and much clayey rock. Some to much bedrock and probably much mantle are severely expansive.

Expression in aerial photographs: Largely light photographic tone. On scarp slopes of hogbacks, which much of this unit occupies, much is ribbed, much smooth. Near Nortonville Road, includes a swale, then a nose having several light-toned bands as wide as 50 ft between dark-toned bands approximately 70 ft in width, then uniform texture of finely and subtly banded intermediate topography that has coarse ribbing. West of Nortonville Road, shows intermediate topography, much landsliding; here much is banded distinctly, largely showing light-toned bands 5-20

ft in width, some as wide as 100 ft or more, between dark-toned bands as wide as 50 ft; most is dark in tone, some to equally abundant light.

Composition: (1) Sandstone, medium to coarse grained, fairly clean, micaceous, containing calcite-cemented concretions. (2) Clayey rock, consisting of shale, mudstone, and siltstone. (3) Dirty sandstone that has silty and clayey matrix, fine to medium grained; some has shale laminae, some calcite cemented. (4) Tuff beds (Primmer, 1964).

Proportions uncertain. From expression in aerial photographs, our observations, and the literature, best estimate is that unit consists of some to much of both (a) clean sandstone (composition 1) with lesser clayey interbeds, and (b) clayey rock (composition 2) with lesser dirty sandstone interbeds (composition 3). We infer light-toned bands on photographs to be sandstone containing lesser clayey rock, dark-toned bands to be clayey rock containing lesser sandstone. Minor tuff and cemented rock.

Hardness: Clean sandstone weathers soft, probably some firm. Clayey rock and dirty sandstone are firm where weathered and probably where fresh. Cemented sandstone hard.

Bedding: Uncertain. Includes some or more very thick sandstone containing distinct clayey interbeds to thick(?), and some or more very thick (as much as 15 ft or more) shale containing medium to 5-ft distinct beds of clayey sandstone. Cemented sandstone to thick, concretions as much as 4 ft in diameter.

Parting: On distinct bedding planes and within clayey rock at very close to moderate spacing. Thus, some or more of unit has very close to moderate spacing, some or more very wide.

Fracture: Close to moderate spacing in clean sandstone, moderate in dirty sandstone. Close to very close spacing of weathering fracture in clayey rock. Hard cemented sandstone has wide spacing (in thick beds).

Permeability: Intergranular permeability of clean sandstone moderate to low, siltstone and dirty sandstone low, shale and mudstone very low. Thus, bedrock includes some moderate intergranular permeability, some low, and some very low. Probably much mantle moderate, much very low.

Surficial mantle: Probably much granular, much clayey.

Expansivity: Much bedrock unexpansive, some to much severely expansive (clayey rock). Probably much mantle severely expansive, much unexpansive to significantly expansive. Samples: AS12A, typical weathered shale and clayey rock, free swell 100 percent; CL34B, typical weathered shale, moderately cracked, free swell 240 percent; AS12B, dark sandy clay soil, moderately cracked, typical for area, free swell 110 percent; HB8, sandy clay soil, moderately cracked, may be contaminated from another unit, free swell 101 percent; CL34A, clayey soil, free swell 130 percent.

Stratigraphic thickness: About 400 ft (Brabb and others, 1971); 440 ft (Fulmer, 1964); about 700 ft (Johnson, 1964); 700 ft (Colburn, 1961); 500 ft (Clark, 1918).

Sources: Brabb and others, 1971; Bartow, 1985; Clark, 1918; Colburn, 1961; Fulmer, 1964; Johnson, 1964; Primmer, 1964; Taff, 1935; three stations.

MAP UNIT 413

Geologic unit, (age), and location: Nortonville Shale, sandstone member (T), in Pacheco syncline, west of Concord.

Summary: Interbedded sandstone and shale, both in 10- to 20-ft beds, equally abundant. Some moderate permeability in sandstone. Much bedrock and much to most mantle are probably severely expansive.

Expression in aerial photographs: Forms prominent bumps and ridges; shows bands, light and dark in tone, 10-20 ft in width.

Composition: Sandstone interbedded with shale, about equally abundant. Sandstone is medium to coarse grained, moderately to poorly sorted, much clean except for minor silt, some dirty and scaly. Probably concretions in sandstone.

Hardness: Where fresh and weathered, shale has firm pieces and firm to soft rock mass owing to fissility, sandstone soft to firm. Concretions(?) hard.

Bedding: Very thick (10- to 20-ft) distinct beds of sandstone and shale, repetitive.

Parting: At very close to close spacing in shale where both weathered and fresh (to depth of 35 ft); at very wide spacing (10-20 ft) along contacts between sandstone and shale.

Fracture: Shale fractured at close spacing, possibly to moderate. Sandstone has mostly moderate to wide spacing, ranging from close to very wide (4 ft).

Permeability: Intergranular permeability very low in shale, low to moderate (much of each) in sandstone. Thus, some bedrock moderate, some low, much very low. Much to most mantle very low, some to much moderate.

Weathering: Some sandstone fresh at depth of 25 ft. Shale is fissile to depths of 35 ft or more.

Surficial mantle: Much to most clayey, some to much granular.

Expansivity: Much bedrock (shale) and much to most mantle are probably severely expansive, much bedrock (sandstone) and some mantle are unexpansive, probably some mantle is significantly expansive. Inferred from unit 465.

Sources: Bartow, 1985; Weaver, 1953; two stations.

MAP UNIT 414

Geologic unit, (age), and location: Domengine Sandstone (T), only in area north and east of Mount Diablo, excluding Pacheco syncline.

Summary: One-half to two-thirds is very thick bedded quartzose sandstone, firm to soft, moderate permeability; remainder is interbedded mudstone, shale, and clayey sandstone, much thinly bedded. Sand used widely as glass sand, foundry sand, blend sand, masonry, and subbase. Coal mined from several seams north of Mount Diablo. Locally travertine over calcareous sandstone is used for cement. About one-half of bedrock has moderate intergranular permeability, one-eighth high. Some severely expansive bedrock and mantle.

Expression in aerial photographs: Intermediate topography, some or more of both resistant and subdued intermediate topography, much very subdued. Little drainage development in most of unit. In places subtly banded by zones 10-100 ft in width, both light and dark in tone, equally abundant. Some distinct resistant ridges as wide as 100 ft and some valleys along strike, but most lacks dramatic topographic contrasts. Near Nortonville, unit develops hard topography that lacks much ribbing; in favorable places, shows regular bands 10-50 ft in width, mostly white, no nonresistant intervals. Area near Lime Ridge is mildly resistant intermediate topography, some approaching hard, appears homogeneous. Distinctive vegetation and light photographic tone over this unit in all areas.

Composition: (1) Sandstone, quartz rich, medium to coarse grained, some very coarse grained, moderately to well sorted, somewhat silty (quartz flakes), minor glauconitic; much is white. In places cemented by calcite in concretions and beds, in other places cemented by limonite in concretions and along fractures. Also, lesser fine-grained buff-colored sandstone that locally includes hard cemented layers containing marine fossils. (2) Less resistant interbeds consisting of interbedded: (a) siltstone, some tuffaceous, some fissile, varying from punky to hard; (b) clayey and silty sandstone, largely fine grained; (c) mudstone; and (d) shale, clay to silty. (3) Conglomerate, of two types and occurrences: (a) basal conglomeratic sandstone and conglomerate that ranges from pebble conglomerate to boulder conglomerate of large to 4 ft calcareous concretions in clayey sandstone matrix; (b) conglomerate of pebbles and subangular cobbles of diabase, near top of section in Lime Ridge area and near Nortonville (Taff, 1935). (4) Local breccia of blocks of hard, cemented, well-sorted, medium-grained sandstone (10 percent) in matrix of soft fine-grained sandstone (90 percent), probably tectonically crushed. (5) Sub-bituminous coal or lignite, in a few seams near Nortonville area. (6) Travertine overlying calcareous sandstone on Lime Ridge.

Prominent lithology is sandstone (composition 1), and in most sections this constitutes about half to two-thirds of unit, the remainder being largely clayey interbeds (composition 2). Interbeds include thin to thickly interbedded materials as well as homogeneous sequences, such as very thick shale, and include some of each of the materials listed under composition 2. Conglomerate is a minor constituent overall and is not everywhere present, but occurs in some areas and is continuous for more than 4 miles in one place. Lignite is a minor constituent (two or three beds); concretions and cemented rock are minor.

The Lime Ridge area is distinguished from the rest of the unit by the following: (1) It lacks the upper clayey, nonresistant part of the typical section (Taff, 1935) and, thus, has a higher proportion of sandstone; (2) includes diabase conglomerate near top of section; (3) includes some travertine, calcareous sandstone, and generally more calcite-cemented material than in most of unit; and (4) includes some breccia, probably tectonic, on west side of Lime Ridge.

Hardness: Sandstone is firm to soft where fresh and weathered, probably softer where fresh than where weathered, mostly friable or nearly so; in places, rock is firm owing to case hardening or partial cementation by iron oxide along fractures. Concretions, cemented sandstone, and travertine are hard. Most interbed materials are firm where fresh and weathered, but minor tuffaceous siltstone is hard, and some siltstone and shale may be soft or punky (Johnson, 1964). Clasts in conglomerate hard to firm, matrix probably firm to soft. Lignite firm.

Bedding: Sandstone occurs in very thick (4-ft to more than 100-ft) beds, although few beds are thicker than 30 ft; intervals of almost entirely sandstone as thick as 500 ft. Intervals of mudstone, shale, siltstone, and clayey sandstone are interbedded largely at thin to 4 ft but as much as 20 ft or more; dominantly nonresistant interbedded sequences are as thick as 150 ft or more. Conglomerate beds are largely less than 20 ft, but as thick as 50 ft. Lignite beds are lenticular and as thick as 4.5 ft; zones of lignite 6-18 ft in thickness are interbedded with clay and shale. Travertine on Lime Ridge forms crust of unknown thickness near ground surface. Concretions are as much as 10 ft or more in diameter. See sections by Colburn (1961) and Clark and Woodford (1927).

Parting: Absent within sandstone; present on distinct bedding planes (sandstone against clayey interbeds); and present within clayey interbeds largely at close to very close spacing, some of these materials fissile.

Fracture: In sandstone, spacing is variable and ranges from close to 7 ft, most moderate to 4 ft; variable to extent that in places spacing is largely close to moderate, in other places largely 3-6 ft. In places orientation of fractures in sandstone is regular, in other places irregular. Within 10 ft of ground surface, some sandstone develops sheeting at close to moderate spacing parallel to ground surface. Fractures in sandstone generally do not constitute significant planes of weakness, and generally are not effective for excavation: in one place, recent trenching in apparently wide to 4-ft spacing produced medium to large blocks. Many fractures in sandstone are stained and slightly cemented so that they no longer form planes of weakness; where stained, fractures form thin to medium firm zones through firm to soft rock. In interbedded clayey rock, spacing is largely very close to moderate, much as weathering fracture. In conglomerate probably absent to very wide. In breccia on Lime Ridge, hard blocks as large as 6 ft in diameter are fractured at moderate to wide spacing.

Permeability: Sandstone has largely moderate intergranular permeability, some high (where coarse grained), some low where sufficient silt and clay content. Interbedded clayey rock (composition 2) low to very low, much of each. Conglomerate where observed has matrix of low intergranular permeability, probably overall low to moderate. Thus, about half of bedrock has moderate permeability, one-fourth to three-eighths low, one-eighth or less very low, less than one-eighth high. Most mantle moderate, some low to very low.

Weathering: Sandstone weathered to depth of 30 ft or more; iron staining extends to greater depth. Some sandstone scales from cut slopes, some develops sheeting near ground surface. Permeability in sandstone is reduced near ground surface by clay coatings. Much clayey rock develops parting and most develops weathering fracture where weathered.

Surficial mantle: Largely granular, some clayey. Largely uncracked sand to clayey sand soil, such as samples CL7B and WC54. Most is barely coherent and of moderate permeability; some has sandy clay subsoil, such as sample BHS22.

Expansivity: Most bedrock and mantle is unexpansive, but much of each may be expansive, and some of each is severely expansive (shale, mudstone, and overlying mantle). Bedrock sample WC57, shale or mudstone, moderately cracked, typical, free swell 82 percent. Surficial mantle samples: CL7B, typical brown sand soil, free swell 88 percent (greatly exaggerated); WC54, typical clayey sand soil, free swell 45 percent; BHS22, typical mildly cracked sandy clay subsoil, free swell 85 percent (exaggerated).

Stratigraphic thickness: 525-850 ft (Clark and Woodford, 1927); 700-1,200 ft (Johnson, 1964); 1,500 ft north of Mount Diablo, including 500 ft of Nortonville Shale (Taff, 1935); about 1,450 ft near Nortonville (Colburn, 1961, from stratigraphic section).

Sources: Clark, 1921; Clark and Woodford, 1927; Colburn, 1961; Davis and Goldman, 1958; Dickerson, 1911; Johnson, 1964; Pampeyan, 1963; Taff, 1935; 13 stations.

MAP UNIT 415

Geologic unit, (age), and location: Domengine Sandstone (T), only in area north and east of Vallejo, excluding Potrero Hills and area of exposure near Napa.

Summary: Sandstone interbedded with much shale and mudstone; sandstone and clayey rock probably about equally abundant in most places. Probably some severely expansive bedrock and mantle. See unit 414 for detail.

Expression in aerial photographs: Distinctive resistant intermediate topography, having light tone and trees in an otherwise treeless area; quarries, white in photographs, are common. Resistant light-toned bands are 10-100 ft wide, dark-toned bands as wide as 100 ft including light bands as wide as 10 ft; in most, half or more of light-toned bands are about 100 ft wide. Varies from largely light-toned to one-third light and two-thirds dark, about equally abundant in most places.

Composition: Sandstone interbedded with shale and mudstone. Sandstone is medium to coarse grained and generally clean to silty but clay free. Some sandstone is cemented by silica, iron oxide, and calcite. Where calcite cemented, sandstone contains shell fragments. Exposures show largely sandstone, but expression in aerial photographs suggests that some to most, generally about half, is shale and mudstone.

Hardness: Sandstone is friable and firm to soft where weathered, but hard where cemented. Interbedded clayey rock probably firm.

Bedding: Inferred from unit 414. Mostly very thick distinct sandstone beds (as much as 50-100 ft) between thin to very thick (probably as much as 100 ft including some sandstone less than 10 ft) mudstone and shale. Some sandstone has very thin to very thick (10-ft) indistinct internal bedding. Hard cemented rock in thick to very thick (10-ft) zones.

Parting: Mostly absent within sandstone, except possibly present in some near ground surface, as in unit 414. Present at distinct bedding planes and possibly within much interbedded clayey rock.

Fracture: In sandstone, close to wide spacing, but minor sandstone has close to moderate spacing of weathering fracture. Hard cemented sandstone has moderate to very wide (more than 5-ft) spacing.

Permeability: Sandstone has low and moderate intergranular permeability; in best exposure, half or more of sandstone moderate. Mudstone and shale have very low intergranular permeability, probably some low fracture permeability in shallow rock. Thus, some bedrock has moderate intergranular permeability, some low; probably much very low, but some of this probably has low fracture permeability in shallow rock. Probably most mantle moderate, some to much low to very low.

Weathering: Sandstone weathered to depths greater than 30 ft.

Surficial mantle: Probably largely granular, some to much clayey.

Expansivity: Much to most of both bedrock and mantle is unexpansive, probably much expansive, and probably some or more is severely expansive. See samples for unit 414.

Sources: Sims and others, 1973; Weaver, 1949; two stations.

MAP UNIT 416

Geologic unit, (age), and location: Domengine Sandstone (T), only in Potrero Hills, northwest of Montezuma Hills.

Summary: Not seen in field. Different impressions of proportions, from largely sandstone but some clayey rock (Tolman, 1943) to largely silty shale but some sandstone (Bailey, 1930). Varies from lower silty very fine grained sandstone to upper fine- to coarse-grained sandstone having abundant pebbly layers and silty sand (Cooper-Clark and Associates, 1973). Much sandstone is case hardened; all is rippable (Cooper-Clark and Associates, 1973). Like unit 415; see descriptions of units 414 and 415 for composition and physical properties.

Expression in aerial photographs: Light tone, semiresistant, containing numerous pits and some outcrop. Largely light gray tone, some white. One outcropping bed is 20 ft wide.

Permeability: Probably like unit 415. Measured permeability is $1x10^{-3}$ to $1x10^{-8}$ cm/sec, locally quite permeable (Cooper-Clark and Associates, 1973).

Surficial mantle: Probably like unit 415. Soils dominantly granular and permeable, but some clayey horizons that are expansive.

Expansivity: Probably like unit 415.

Sources: Bailey, 1930; Cooper-Clark and Associates, 1973; Sims and others, 1973; Tolman, 1943; Weaver, 1949.

MAP UNIT 417

Geologic unit, (age), and location: Domengine Sandstone (T), only near Napa.

Summary: Approximately equally abundant sandstone interbedded with mudstone. Much bedrock and mantle is significantly expansive. See unit 414 for detail.

Composition: Sandstone interbedded with mudstone. Estimated to be 50-60 percent sandstone, 40-50 percent mudstone. Sandstone is fine grained and well to moderately well sorted. Some sandstone is cemented by calcite, and concretions are present.

Hardness: Sandstone is hard where fresh; ranges from hard to soft, mostly hard to firm, where weathered; possibly case hardened. Mudstone is firm. Concretions hard.

Bedding: Includes some very thick beds (as much as 10 ft and more), otherwise unknown and unobservable. Infer bedding character from unit 414.

Parting: Present at contacts between sandstone and mudstone; largely absent within sandstone and mudstone.

Fracture: Sandstone fractured mostly at moderate spacing, ranging from close to wide, more commonly moderate to wide, but in places dominantly wide to very wide (as much as 8 ft). Mudstone has close to very close spacing of spheroidal weathering fracture superimposed on moderate original spacing.

Permeability: Intergranular permeability in sandstone largely low, probably minor to some moderate; in mudstone very low, but much shallow mudstone may have low fracture permeability. Thus, much bedrock has low intergranular permeability, much very low, probably minor to some moderate; some(?) low fracture permeability in shallow rock. Probably much mantle moderate, much low to very low.

Weathering: Sandstone and mudstone weathered to depths of more than 15 ft.

Surficial mantle: Probably much granular, much clayey.

Expansivity: Much bedrock and mantle are unexpansive, much significantly expansive, possibly some severely expansive. Samples: N9, mildly cracked weathered mudstone, most expansive material seen in unit, free swell 74 percent; N10, typical clayey sand soil, free swell 55 percent. Clayey soil of expansivity greater than N10 but less than N9 is probably developed on mudstone.

Sources: Fox and others, 1973; Osmont, 1905; Weaver, 1949; three stations.

MAP UNIT 418

Geologic units, (age), and location: Meganos Formation, Divisions D and E of Clark and Woodford (1927) (T), east of Mount Diablo.

Summary: Not seen in field. Combination of units 377 and 444; see descriptions of these units for composition and physical properties. Probably includes much of both sandstone and clayey rock.

Permeability: Probably much bedrock has very low intergranular permeability, some low, some moderate, minor to some high. Probably much mantle moderate, much very low to low.

Surficial mantle: Probably much granular, much clayey.

Expansivity: Probably much bedrock unexpansive, much expansive, some severely expansive. Probably some mantle unexpansive, some significantly expansive, some severely expansive.

MAP UNIT 419

Geologic unit, (age), and location: Meganos Formation, sandstone unit in Division C of Clark and Woodford (1927) (T), only in and near Pacheco syncline, west of Concord.

Summary: Unit includes unbedded high-matrix sandstone, flysch, very thick bedded clean sandstone, and silty shale interbedded with silty sandstone. All can be ripped. Probably much bedrock and most mantle are significantly expansive, some of each severely expansive.

Expression in aerial photographs: Includes resistant rib of intermediate to hard topography, flanked on either side by nonresistant swale topography.

Composition: (1) Fine-grained to very fine grained high-matrix sandstone, probably tuffaceous; some flakes where weathered. Grades to fine sandy mudstone. Generally weathers spheroidally. (2) Flysch of clean, well-sorted to moderately well sorted, fine-grained to very fine grained sandstone repetitively interbedded with silty mudstone and shale that grade to clay- and silt-saturated fine-grained to very fine grained sandstone. (3) Very thick bedded, well-sorted, medium-grained tuffaceous sandstone (white sandstone of Weaver, 1953), most clean, some silty; many to most grains are glass and break down when rubbed. Contains numerous concretions. Minor interbedded sandy mudstone shows a parting but no fissility; some approaches porcelaneous shale. (4) Silty shale or mudstone interbedded with silty sandstone (from Weaver, 1953). Unit consists of about one-third composition 1, one-third composition 3, one-third composition 4, and one-eighth composition 2.

Hardness: Largely firm where fresh and weathered. Clean, very thick bedded sandstone is firm to soft where weathered. Concretions are hard.

Bedding: Absent to indistinct in composition 1. In composition 2, distinct and repetitive thin to medium sandstone beds between mostly thin to medium, but as much as 10-ft, beds of clayey rock. Composition 3 has distinct very thick (40- to 80-ft) sandstone beds between very thick (10-ft) sandy mudstone interbeds; occurs near middle of unit as resistant ridge. Composition 4 described as thinly bedded silty shale that contains medium to thick interbeds of sandstone; beds are probably distinct.

Parting: Absent in composition 1; in composition 2, present at close to moderate spacing on bedding planes and some at very close spacing in shaly interbeds; in composition 3, present at very wide spacing (40-80 ft) on bedding planes and at close to very close spacing in parted but not fissile mudstone interbeds; and in composition 4, probably at moderate to very wide spacing.

Fracture: Composition 1 has close to moderate spacing on which spheroids are generally developed where weathered. Composition 2 has sandstone beds fractured at spacing similar to bed thickness (close to

moderate) between clayey interbeds that have close, some moderate, spacing. In composition 3, sandstone has moderate to wide spacing; sandy mudstone interbeds have close to very close spacing and parting on close to moderate original spacing. Composition 4 unknown, probably close to very close spacing in silty shale and moderate to wide in sandstone. Concretions in composition 3 are as large as 4 ft in diameter.

Permeability: Intergranular permeability of high-matrix sandstone low; mudstone very low; and clean, well-sorted, tuffaceous sandstone moderate to low. Thus, much to most bedrock has low intergranular permeability, some moderate, some very low. Probably most mantle low to very low, some moderate.

Weathering: Sandstone in compositions 2 and 3 is weathered to depth of 30 ft. Mudstone and high-matrix sandstone are weathered more shallowly, probably to depths of 5-20 ft.

Surficial mantle: Probably largely clayey, some granular.

Expansivity: Probably much bedrock significantly expansive, some severely expansive, much unexpansive. Probably most mantle significantly expansive, some severely expansive, some unexpansive. Samples: PC11A, sandy clay soil, A-horizon, free swell 62 percent; PC11B, slightly sandy clay soil, B-horizon, free swell 70 percent. See samples for unit 468.

Sources: Clark and Woodford, 1927; Weaver, 1953; one station.

MAP UNIT 420

Geologic units, (age), and location: Meganos Formation, Divisions A, B, and C of Clark and Woodford (1927) (T), east of Mount Diablo.

Summary: Not seen in field. Combination of units 345 and 445; see descriptions of these units for composition and physical properties. Probably much sandstone, much clayey rock.

Permeability: Probably most bedrock has low to very low intergranular permeability, some moderate to high. Probably much mantle moderate, much very low.

Surficial mantle: Probably much granular, much clayey.

Expansivity: Much bedrock expansive, probably severely expansive; much unexpansive. Probably much mantle severely expansive, much unexpansive.

MAP UNIT 421

Geologic unit, (age), and location: Butano(?) Sandstone (T), in San Mateo County foothills of Santa Cruz Mountains.

Summary: Sandstone and variably abundant interbeds of mudstone, siltstone, and shale. Much clayey bedrock and most clayey mantle is severely expansive.

Composition: Sandstone and variably abundant interbeds of mudstone, siltstone, and shale; sandstone is commonly medium to very coarse grained and poorly sorted, but lacks clay matrix; in places, carbonate cement in thicker sandstone beds; clayey rock locally abundant. Much to most of unit is sandstone, some to much clayey rock.

Hardness: Sandstone firm where fresh, hard where cemented, firm to soft and friable where weathered; clayey interbeds firm to soft.

Bedding: Distinct; sandstone beds thin to very thick (30 ft), commonly more than 10 ft thick, clayey interbeds thin to very thick.

Parting: Close to very wide spacing, on distinct bedding planes and within clayey interbeds.

Fracture: Commonly moderate to wide spacing in sandstone, close to very close spacing in weathered clayey interbeds.

Permeability: Intergranular permeability in sandstone (much to most of unit) low, very low where cemented; very low in clayey rock (some to much of unit). Some shallow clayey rock has low fracture permeability. Much to most mantle moderate, some to much very low to low.

Surficial mantle: Much to most granular, some to much clayey. Clayey subsoil in places.

Expansivity: Much to most bedrock unexpansive (sandstone), some severely expansive (much of clayey rock). Some to possibly much mantle severely expansive, much unexpansive. Bedrock samples: PA1A, shale, free swell 89 percent; PA2O, gypsiferous claystone, free swell 47 percent; PA16, sandstone, free swell 52 percent; PA17, sandstone, free swell 59 percent; PA22, siltstone, free swell 61 percent; PA5, claystone, free swell 65 percent; PA24, weathered claystone, free swell 80 percent; PA2A, claystone, free swell 91 percent; PA4A, claystone, free swell 96 percent; PA19, gypsiferous claystone, free swell 100 percent; PA23, clayey siltstone, free swell 110 percent; PA21, gypsiferous claystone, free swell 140 percent; PA27, claystone, free swell 113 percent; PA32, claystone, free swell 116 percent; PA43, silty sandstone, free swell 43 percent. Surficial mantle samples: PA2B, soil on claystone, free swell 118 percent; PA4B, soil, free swell 90 percent; PA1B, soil on shale, free swell 82 percent; PA28, adobe soil, free swell 122 percent; PA42, dark clayey soil, free swell 158 percent; PA41, soil, free swell 53 percent. Expansive materials (clayey rock and mantle) are abundant in about half of unit.

Stratigraphic thickness: 2,500 ft.

Source: Ellen and others, 1972.

MAP UNIT 422

Geologic unit, (age), and location: Tesla Formation (T), east of Livermore Valley.

Summary: About 40 percent shale and mudstone, 40 percent clean sandstone, 10 percent clayey sandstone, and 10 percent thinly bedded rock. Clean sandstone has moderate permeability. Some to much mantle and some or more bedrock is severely expansive.

Expression in aerial photographs: Intermediate topography; white spots in areas of mining.

Composition: (1) Sandstone, clean, some silty, fine to coarse grained, mostly medium grained; much contains abundant mica; mostly moderately well sorted to well sorted, some moderately sorted; moderate to low permeability. Huey (1948) distinguished white sand (75-95 percent angular quartz) from buff-colored sand (35 percent quartz, 60 percent feldspar). (2) Shale and mudstone, some silty to very fine sandy; similar except for fissility and bitumen content of some shale. (3) Thinly interbedded sandstone, clayey sandstone, and shale; sandstone is fine to medium grained. (4) Clayey sandstone, low permeability, clay saturated to nearly saturated, otherwise similar to clean sandstone. (5) Coal, low grade (lignite), firm, some fissile, minor constituent. (6) Concretions, both calcite cemented and iron oxide cemented.

Unit contains much clean sandstone, much shale and mudstone, minor to some clayey sandstone, and minor to some thinly bedded rock. Crude estimate is about 40 percent shale and mudstone, 40 percent clean sandstone, 10 percent clayey sandstone, and 10 percent thinly bedded rock. See section by Huey (1948).

Hardness: Clean sandstone is firm to soft (borderline) where weathered; clayey sandstone firm where weathered; fresh and weathered mudstone and shale have firm pieces when dry, soft when wet, but bituminous shale firm. Calcite-cemented concretions hard; iron oxide concretions and stained zones (Anderson and Pack, 1915) firm to hard.

Bedding: Distinctly interbedded intervals of the four major compositions, each ranging from thick to very thick (as much as about 100 ft), most 6-50 ft, much 10-40 ft. Within these intervals: clean sandstone is unbedded but indistinctly laminated and cross laminated by iron oxide staining and minor variations in grain size; clayey sandstone is unbedded; mudstone and shale are unbedded but parted and commonly contain carbonaceous flakes parallel to bedding; thinly interbedded sandstone and shale shows distinct beds that are very thin to thick. Calcite-cemented beds and concretions to thick, locally as thick as 10 ft. Iron oxide concretions small to medium. Lignite beds are lenticular and as much as 66 in. thick (Huey, 1948).

Parting: Present on contacts between sandstone and mudstone or shale (very wide spacing), within shale and mudstone at very close to moderate spacing, in thinly bedded rock at very close to moderate spacing, absent within clayey sandstone. Thus, present at very close to moderate spacing in about half of unit. Shale and thinly bedded rock have excellent fissility and parting.

Fracture: In clean sandstone, generally indistinct and irregular fracture at moderate to wide spacing, some to very wide (6 ft), irregularly distributed. Shale and mudstone have mostly close, ranging from very close to moderate, spacing of weathering fracture on moderate to wide original spacing; clayey sandstone has close, some to moderate, spacing of weathering fracture; thinly bedded rock close to moderate. Spacing in concretions is mostly moderate to wide, some as much as 4 ft.

Permeability: Intergranular permeability of clean sandstone largely moderate, clayey sandstone low, thinly bedded rock low, mudstone and shale very low. Thus, about 40 percent moderate, 20 percent low, and 40 percent very low intergranular permeability in bedrock. Much mantle moderate, much very low.

Weathering: Clean sandstone is weathered to depths greater than 25 ft. Other compositions have weathering fracture to depths greater than 25 ft on surface of cuts, but pieces probably fresh at shallower depth. Some shale fresh (blue color) at depth of 3 ft.

Surficial mantle: Much granular, much clayey. About half of unit or less has uncracked to very mildly cracked clayey sand soil, no sample. Half or more of unit has mildly to moderately cracked sandy clay soil and subsoil, such as samples MDW7B, MDW13B, AA9A, and AA9C. Popcorn clay soil, such as samples MDW13A and AA10, covers less than 20 percent of unit.

Expansivity: Much bedrock is unexpansive, some to much is expansive, some or more is severely expansive. Much mantle unexpansive, most expansive, some to much severely expansive. Samples: MDW7A, typical weathered clayey rock, mildly cracked on surface of cut, free swell 82 percent; MDW7B, moderately cracked brown sandy clay soil, free swell 99 percent; MDW13B, mildly to moderately cracked sandy clay subsoil, typical of much of unit, free swell 71 percent; AA9A, mildly cracked sandy clay subsoil, free swell 81 percent; AA9C, moderately cracked sandy clay soil, free swell 82 percent; MDW13A, dark popcorn clay soil, free swell 119 percent; AA10, well-cracked plastic sandy clay subsoil, free swell 130 percent.

Stratigraphic thickness: 2,000 ft maximum (Huey, 1948); 1,400 ft near Tesla (Anderson and Pack, 1915).

Sources: Anderson and Pack, 1915; Huey, 1948; seven stations.

MAP UNIT 423

Geologic unit, (age), and location: Sandstone (T), only in Santa Cruz Mountains between Lexington Reservoir and Pajaro River.

Summary: Sandstone and interbedded clayey rock, about equally abundant to clayey rock being somewhat dominant. Sandstone is largely firm to quite firm, some hard, where weathered. Some zones of wide to 10-ft fracture spacing in sandstone produce huge blocks. Much mantle is significantly expansive, minor severely expansive subsoil.

Expression in aerial photographs: Intermediate topography that mostly lacks ribbing; broadly rounded crests strongly suggest old upland surface.

Composition: (1) Sandstone, fine to coarse grained, moderately to moderately well sorted, no calcite cement detected. (2) Mudstone grading to siltstone and very fine grained clayey sandstone. Unit has about equally abundant sandstone and clayey rock to somewhat dominant clayey rock. Includes some zones of dominant very thick sandstone, some zones of dominant clayey rock, and some zones of thin to thick interbedding (flysch).

Hardness: Much weathered sandstone is firm, much quite firm, some hard, some soft where well weathered. Quite firm sandstone is difficult to rip or break. Clayey rock is firm where fresh and weathered.

Bedding: Sandstone distinctly interbedded with clayey rock. Sandstone occurs in both very thick beds (as much as 15 ft or more) and in medium to thick beds interbedded with clayey rock. Unit includes some zones of dominantly very thick sandstone, some dominant flysch (thin to thick repetitively interbedded rocks), and some zones of dominant clayey rock. Much of clayey rock is probably distinctly to indistinctly interbedded.

Parting: On distinct bedding planes and within most clayey rock at very close to moderate spacing. Thus, spacing is very wide in some of unit, very close to moderate or wide in most of unit.

Fracture: Sandstone has largely moderate to wide fracture spacing, but some very wide spacing (as much as 10 ft, many blocks greater than 4 ft) occurs in zones of wide to very wide spacing, probably in zones of very thick bedding. Clayey rock has moderate, probably to wide, original fracture spacing and close to very close spacing of weathering fracture.

Permeability: Sandstone has largely low intergranular permeability, some moderate; clayey rock very low to low. Thus, about one-third of bedrock has very low intergranular permeability, one-half low, one-sixth moderate. Most shallow clayey rock probably has low fracture permeability. Probably much mantle moderate, much low to very low, but most of upland area very low to low.

Weathering: Sandstone weathered to greater than depth of cuts.

Surficial mantle: Probably much granular, much clayey. Surficial soil on upland surface is clayey sand to loam; sample MMD8, soil on mudstone and siltstone, is more clayey than most. Most of the gently sloping ridgecrest in unit has a clayey subsoil, of which sample MMD9 represents the most expansive typical variety.

Expansivity: Much bedrock unexpansive, much may be significantly expansive. Much mantle unexpansive, much significantly expansive, minor severely expansive. Most of surficial soil is uncracked like sample MMD8, uncracked loam, free swell 64 percent. Sample MMD9, mildly cracked subsoil, free swell 83 percent, underlies some or more of the upland surface and is probably more expansive than most subsoil in this unit.

Sources: Allen, 1946; McLaughlin and others, 1971; six stations.

MAP UNIT 424

Geologic unit, (age), and location: Martinez Formation (T), only in area east of Clayton, north of Mount Diablo.

Summary: Unit consists of both an upper siltstone and shale member and a lower glauconitic sandstone member. These members are described separately below. For unit as a whole, probably much bedrock is expansive, much unexpansive; probably most mantle is severely expansive, some to much unexpansive to significantly expansive. Intergranular permeability of much bedrock low, much very low; probably most mantle very low, some to much moderate. Probably most mantle is clayey, some to much granular. Thickness of entire unit: 0-1,000 ft (Johnson, 1964); 700 ft (Taff, 1935); 0-1,150 ft (Colburn 1961).

Upper siltstone and shale member

Expression in aerial photographs: Nonresistant, soft area that lacks tonal banding. Much landsliding where held up by adjacent resistant unit 345.

Composition: (1) Silty and very fine sandy mudstone and siltstone. (2) Clayey mudstone and shale. (3) Sandstone, largely fine grained and laminated, some calcite cemented. (4) Medium-grained sandstone and pebble conglomerate, probably anomalous and faulted in. (5) Minor limestone lenses in shale. This member is largely silty mudstone and siltstone, some clayey mudstone and shale, and some sandstone.

Hardness: Firm except cemented sandstone is hard. Anomalous sandstone soft to firm where weathered.

Bedding: All is interbedded, distinctly to indistinctly, in medium to 6-ft beds, largely medium sandstone between thick to 4-ft intervals of silt-

stone, mudstone, and shale. Most sandstone laminated. Calcite-cemented sandstone mostly to medium, some thick.

Parting: On most bedding planes, mostly at moderate to wide spacing, but intervals as thick as 4 ft lack parting. Within most sandstone on lamination at very close to close spacing.

Fracture: Original fracture in mudstone, siltstone, and shale at moderate spacing, about parallel to bedding; spacing of weathering fracture very close to moderate. Firm sandstone fractured at close to moderate spacing, cemented sandstone at moderate to wide.

Permeability: Intergranular permeability of silty mudstone and siltstone very low, some low; sandstone low; clayey mudstone and shale very low. Thus, intergranular permeability of bedrock largely very low, some low, minor moderate in anomalous sandstone. Most to almost all mantle very low.

Surficial mantle: Most to almost all clayey.

Expansivity: Probably most bedrock expansive, some probably severely expansive. Most mantle severely expansive. Sample CL32, typical brown sandy clay soil, mildly cracked, free swell 100 percent.

Stratigraphic thickness: 700 ft (Brabb and others, 1971); 300 ft (Clark, 1921); about 500 ft (Johnson, 1964).

Sources: Brabb and others, 1971; Clark, 1921; Colburn, 1961; Dickerson, 1911; Johnson, 1964; Taff, 1935; one station.

Lower glauconitic sandstone member

Expression in aerial photographs: Resistant, forms series of knobs along strike, largely intermediate topography but some sharp crests. Tone is light but not prominently so. In places, unit includes one outcropping or nearly outcropping, light-toned, resistant band 20-50 ft in width that forms knob or ridge, the remainder of unit being soft; in other places, most of unit is light-toned, somewhat resistant, probably sandstone.

Composition: (1) Sandstone, fine grained but rare coarser intervals (Johnson, 1964), moderately well sorted; glauconitic in part, silty in part; most scaly and has weathering fracture. Some glauconitic sandstone cemented by limonite. Some beds of abundant fossils (coquina). (2) Basal pebble conglomerate (Johnson, 1964) that contains shells, absent in places, and conglomeratic sandstone. (3) Calcite-cemented concretions in sandstone, and lenses and concretions of blue limestone in shale. (4) Fine sandy mudstone.

By our observations, this member is about two-thirds sandstone and one-third mudstone. Colburn's (1961) sections suggest dominant silty mudstone in places. Clark's (1921) section shows less than one-fourth clayey rock, remainder sandstone, some conglomeratic.

Hardness: Firm except for hard concretions, limestone nodules, and hard clasts in conglomerate.

Bedding: Largely very thick (more than 10 ft). Our observations mention gradational contact between sandstone and sandy mudstone and no internal bedding. Basal conglomerate is 2-5 ft thick (Johnson, 1964); one sandstone bed is 50 ft thick (Clark, 1921). Concretions are mostly large, some as much as 4 ft in diameter.

Parting: Largely absent; probably present in mudstone but at unknown spacing, probably wide or greater.

Fracture: Sandstone has wide original spacing and moderate to close spacing of weathering fracture; much scales at very close spacing where weathered. Mudstone has close to very close spacing of weathering fracture.

Permeability: Intergranular permeability of sandstone low, mudstone very low; thus, about two-thirds of bedrock low, one-third very low. Probably much to most mantle moderate, some to much very low.

Surficial mantle: Probably much to most granular, some to much clayey.

Expansivity: Probably most bedrock unexpansive, some expansive (clayey rock). Probably some to much mantle severely expansive, much to most unexpansive to significantly expansive. Samples: CL31A, typical sandy clay soil, free swell 52 percent (exaggerated); CL31B, typical dark sandy clay soil, moderately cracked, free swell 126 percent.

Stratigraphic thickness: 400 ft (Clark, 1921); 300 ft (Brabb and others, 1971).

Sources: Brabb and others, 1971; Clark, 1921; Colburn, 1961; Dickerson, 1911; Johnson, 1964; Taff, 1935; one station.

MAP UNIT 425

Geologic unit, (age), and location: Martinez Formation, lower glauconitic sandstone member (T), only near Carquinez Strait, southeast of Vallejo.

Summary: Includes prominent, rugged outcrop of hard to firm (where weathered) sandstone that produces large to very large blocks. Upper part of section grades toward unit 474 and consists of siltstone, mudstone, and clayey fine sandstone interbedded with the sandstone. Probably much bedrock and mantle significantly expansive.

Composition: Lower 100-150 ft of section is sandstone, mostly medium grained, but includes fine- to coarse-grained and very coarse grained sandstone, some glauconitic; crops out prominently south of Carquinez Strait. Upper 100 ft and more of section is largely siltstone, mudstone, and clayey very fine grained sandstone, and contains lesser amounts of sandstone similar to that in lower part of section. Calcite-cemented concretions as large as 3 ft in diameter.

Hardness: Sandstone is hard to firm where weathered, probably hard where fresh. Siltstone, mudstone, and clayey fine sandstone firm where weathered, probably firm where fresh. Concretions hard.

Bedding: Prominent sandstone lacks internal bedding. In upper part of section, siltstone, mudstone, and clayey fine sandstone occur in distinct very thick (10- to 50-ft) intervals between sandstone in very thick (6- to 30-ft) beds, although in places these sandstone beds are absent. Some indistinct bedding in places at medium to very thick (4 ft). Some siltstone and very fine sandstone is laminated.

Parting: Present only on contacts between sandstone and clayey rock at very wide (6- to 50-ft) spacing in upper part of section.

Fracture: Sandstone has moderate to 10-ft spacing, mostly moderate to 5 ft. Clayey rock has close spacing of weathering fracture, probably on moderate original spacing.

Permeability: Intergranular permeability of sandstone low to moderate (straddles boundary); siltstone and clayey sandstone low; mudstone very low, but possibly has low fracture permeability in shallow rock. Thus, some bedrock has moderate intergranular permeability, much low; some very low, but this possibly has low fracture permeability in shallow rock. Probably much mantle moderate, much low to very low.

Weathering: To depths greater than 50 ft in sandstone, probably to depths greater than 20 ft in clayey rock.

Surficial mantle: Probably much granular, much clayey. No observations.

Expansivity: Much bedrock unexpansive, much probably significantly expansive (clayey rock). Much mantle unexpansive, probably much significantly expansive, probably some severely expansive (subsoil). Sample BN14, clayey fine sandstone, mildly cracked, free swell 60 percent. See samples for unit 474.

Stratigraphic thickness: 300 ft.

Sources: Davis and Vernon, 1951; Lawson, 1914; Merriam, 1897; three stations.

MAP UNIT 426

Geologic unit, (age), and location: Martinez Formation, lower glauconitic sandstone member (T), only in area west of Concord.

Summary: About half sandstone and conglomerate, half clayey rock. Some sandstone and conglomerate is calcite cemented and hard. Much bedrock and mantle is severely expansive.

Expression in aerial photographs: Mostly ribbed and resistant, intermediate to locally hard crests. In places see light-dark splotchy banding at about 50-ft intervals, very subdued. Some clear evidence for contrast in resistance of beds.

Composition: (1) Sandstone, medium grained, most moderately to poorly sorted (of low permeability), some well sorted and clean (of moderate permeability). About one-fifth of sandstone is calcite cemented. Minor glauconitic medium-grained sandstone of 50 percent glauconite. (2) Conglomerate of pebbles and cobbles in low permeability sandstone matrix, about one-fifth calcite cemented. (3) Mudstone, grading to siltstone, sandy claystone (some probably tuffaceous), and fine-grained silt- and clay-saturated sandstone. (4) Shale, clay to silty.

No complete section observed, so proportions are uncertain. Unit appears to consist of about equally abundant sandy rock (compositions 1, 2) and clayey rock (compositions 3, 4). Of sandy rock, sandstone is more abundant than conglomerate. Some (one-fifth) of sandstone and conglomerate is calcite cemented. Of clayey rock, mudstone (composition 3) is dominant, some shale.

Hardness: Sandstone is largely firm where weathered and probably where fresh, some (clean sandstone) is soft where weathered; hard where calcite cemented, some case hardens. Conglomerate is largely firm with hard clasts, hard where cemented. Clayey rock (compositions 3, 4) is firm where fresh, firm to soft where weathered (soft when damp).

Bedding: Sandstone occurs in very thick (6- to 100-ft, largely 6- to 30-ft) distinct beds, in thin to thick beds interbedded with similar thicknesses of clayey rock, and less commonly in very thick (tens of feet) intervals of laminated sandstone. Conglomerate occurs in very thick (5- to 20-ft) beds. Cemented zones in sandstone and conglomerate are thick to 5 ft. Clayey rock is largely indistinctly bedded in very thin to very thick beds, but some is distinctly laminated to thin bedded; intervals of clayey rock, or of clayey rock interbedded with sandstone, as thick as 50 ft or more.

Parting: Present at distinct bedding contacts, largely at very wide (10 ft or more), but some at close to wide; within some mudstone (composition 3) at close to very close, although largely absent; and in shale at very close. Thus, very wide spacing in most of unit, some at very close, some at close to wide.

Fracture: Very thick bedded sandstone has moderate to wide spacing, some as much as 6 ft; in beds to thick, fracture is probably similar to bed thickness. Conglomerate is very widely fractured. Cemented rock fractured at wide to 5-ft spacing. Clayey rock of composition 3 has moderate to 5-ft spacing of stained original fracture and very close to moderate spacing of weathering fracture; some weathering fracture is on close to moderate spheroids. Shale probably similar to clayey rock of composition 3.

Permeability: Intergranular permeability of sandstone is largely low, minor to some moderate; conglomerate low; mudstone and shale largely very low, some low. Thus, much bedrock has low intergranular permeability, much very low, minor to some moderate. Much mantle moderate, much very low.

Weathering: Some clayey rock is fresh at depths of 10-15 ft. Some sandstone weathered to depths greater than 70 ft. Some spheroidal weathering in composition 3.

Surficial mantle: Much granular, much clayey.

Expansivity: Much bedrock is severely expansive, much unexpansive. Much mantle severely expansive, much unexpansive to possibly significantly expansive. Two samples of bedrock: WC33, mildly cracked gray mudstone, typical, free swell 90 percent; WC39, clay shale, constitutes some of unit, free swell 100 percent. Surficial mantle sample WC40, clayey sand soil on sandstone, free swell 49 percent. For entire unit, we estimate much of both clayey sand soil, such as sample WC40, and sandy clay soil of expansivity similar to samples WC33 and WC39.

Stratigraphic thickness: 300 ft.

Sources: Davis and Vernon, 1951; Lawson, 1914; Merriam, 1897; six stations.

MAP UNIT 430

Geologic unit, (age), and location: Sedimentary rocks near Drakes Bay, siltstone and mudstone unit (T), on Point Reyes peninsula.

Summary: Most is siltstone and mudstone, some sandstone and claystone. Some severely expansive bedrock and surficial mantle.

Composition: Largely siltstone and mudstone, both containing minor fine sand; some silty and sandy claystone; and some fine-grained to very fine grained sandstone that has a silt-clay matrix, especially near contact with unit 340. Minor carbonate-cemented concretions.

Hardness: Mudstone and siltstone are generally firm both where fresh and weathered, but are soft in places; siltstone is hard where it occurs as medium beds. Sandstone and claystone are mostly soft where weathered. Concretions are hard.

Bedding: Distinct in seacliffs at very thick (about 20 ft), indistinct at medium to very thick (about 6 ft), in many places absent. Concretions are medium to thick and as much as 7 ft in length.

Parting: Mostly absent. Present in some siltstone and mudstone at very close to close spacing. Also present at scattered very thin beds of silty claystone.

Fracture: In fresh rock, random fractures mostly at moderate spacing, in places at wide spacing, but in places the rock is closely fractured and nearly brecciated. These original fractures are commonly iron stained and cemented and in places partially filled by gypsum. Weathering produces additional very close to close spacing in mudstone and siltstone.

Permeability: Most to almost all bedrock has low to very low intergranular permeability; little permeability contrast. Low fracture permeability in most shallow siltstone and mudstone. Probably most mantle low to very low, some to much moderate.

Weathering: To depths greater than 5 ft. On cut slopes, clayey rock weathers rapidly producing close to very close fracture spacing, which results in rock chips that cover and obscure the true depth of weathering.

Surficial mantle: Probably largely clayey, some to much granular.

Expansivity: Probably most bedrock and mantle is unexpansive or significantly expansive, but some of each is severely expansive. Samples: DB18A, weathered and cracked silty claystone, free swell 92 percent; DB34A, bedrock, free swell 91 percent; DB34B, soil, free swell 50 percent. Mantle that appears expansive covers an estimated 15 percent of unit.

Stratigraphic thickness: More than 400 ft and probably more than 1,100 ft.

Sources: J.A. Bartow, written commun., 1972; Blake and others, 1974; Galloway, 1977; six stations.

MAP UNIT 431

Geologic unit, (age), and location: Neroly Sandstone, siltstone member (T), in the monocline north of Mount Diablo.

Summary: Probably largely tuffaceous siltstone, some dirty to clayey sandstone, and some sandy tuff. Bedding character unknown. Most mantle probably severely expansive.

Expression in aerial photographs: Nonresistant swale-former, but many swales are not very pronounced. Moderate photographic tone.

Composition: (1) Siltstone, as described for unit 352; most is probably tuffaceous, much sandy, approaches mudstone in character. (2) Dirty to clayey fine-grained sandstone. (3) Sandy tuff. (4) Clean sandstone. Unit is probably largely siltstone, and probably includes some of compositions 2 and 3 and minor composition 4.

Hardness: Firm where fresh and weathered.

Parting: Probably largely absent, judging from similar materials in unit 352.

Fracture: Probably close to moderate original spacing and superimposed close to very close spacing of weathering fracture, some spheroidal.

Permeability: Bedrock probably has largely low intergranular permeability, some very low, minor moderate. Most mantle very low.

Weathering: Weathering frees clay of tuffaceous component.

Surficial mantle: Largely clayey.

Expansivity: Bedrock may be expansive where weathered. Most mantle probably severely expansive. No samples; assume soil similar to most expansive soils in unit 352 (severely expansive).

Stratigraphic thickness: 200 ft (Brabb and others, 1971).

Sources: Brabb and others, 1971; Clark, 1912; Condit, 1938; Vitt, 1935; Weaver, 1909; one station.

MAP UNIT 432

Geologic unit, (age), and location: Briones Sandstone, lower part (T), only in the East Bay Hills.

Summary: Sandy claystone, mudstone, and siltstone, interbedded with fine-grained to very fine grained sandstone. Some hard calcite-cemented beds in sandstone. Much to most bedrock and most mantle are severely expansive.

Expression in aerial photographs: In places prominently banded by light-toned resistant zones 50-100 ft in width and dark-toned nonresistant zones and swales 200-500 ft in width. Light-toned bands are sandstone, dark-toned bands are clayey rock.

Composition: Fine-grained to very fine grained, moderately well sorted, quartzose sandstone interbedded with very fine sandy claystone, mudstone, and siltstone. Sandstone includes some highly fossiliferous beds, some hard calcite-cemented beds, and minor grit and fine conglomerate. Expression in aerial photographs suggests that most of unit is clayey rock, some sandstone.

Hardness: Some sandstone is firm; some quite firm; some hard and calcite cemented in fossiliferous horizons, in thick zones adjacent to fossiliferous horizons, and in isolated very thick beds within mudstone. Clayey rock is firm where weathered, probably firm where fresh.

Bedding: Distinct in aerial photographs and probably in outcrop where sandstone beds are present; indistinct to absent in clayey interbeds. Sandstone occurs in very thick (20- to 100-ft) continuous beds and as irregular and discontinuous very thick (as much as 5-ft) beds within mudstone. Banding on aerial photographs suggests 50- to 100-ft intervals of sandstone between 200- to 500-ft intervals of dominantly clayey rock.

Parting: Largely absent (entirely absent or covered in exposures examined). Present at contacts between sandstone and clayey interbeds.

Fracture: Sandstone has mostly moderate to wide spacing, but close to very close spacing of weathering fracture at least in places where well weathered. Mudstone has iron-stained moderate original spacing and close to very close spacing of weathering fracture. Sandy claystone and siltstone have close to very close spacing of weathering fracture.

Permeability: Sandstone has low intergranular permeability, mudstone and sandy claystone very low, siltstone low. Thus, much to most bedrock has very low intergranular permeability and some low fracture permeability in shallow rock, some to much bedrock has low intergranular permeability. Springs issue from base of unit at contact with unit 529 (Ham, 1952). Most mantle very low, some moderate.

Weathering: Mudstone is weathered completely to a depth of 5 ft; weathering fracture extends to depths greater than 15 ft. Sandstone more deeply weathered, probably to depths greater than 20 ft.

Surficial mantle: Largely clayey, some granular. Light granular soil on sandstone and ridges, dark clay soil on low-lying zones and in swales.

Expansivity: Much to most bedrock and most mantle are severely expansive, some of each unexpansive. Samples: MI6B, sandy claystone bedrock, free swell 93 percent; MI6A, well-cracked dark clay soil on sandy claystone, free swell 112 percent; BV10, moderately cracked dark silty clay soil, free swell 95 percent; BN22, moderately cracked silty clay soil, free swell 130 percent, appears similar in expansivity to weathered mudstone beneath.

Stratigraphic thickness: 1,200 ft (J.R. Wagner, written commun., 1973).

Sources: Ham, 1952; Radbruch, 1969; Radbruch and Case, 1967; Sheehan, 1956; Trask, 1922; J.R. Wagner, written commun., 1973; Wagner, 1978; Weaver, 1944; six stations.

MAP UNIT 433

Geologic unit, (age), and location: Monterey Group, clay shale unit (T), in Diablo Range east of San Jose.

Summary: Largely firm clayey rock, some hard rock. Most mantle is significantly expansive. Poor exposures.

Expression in aerial photographs: Nonresistant; exposure too narrow to develop a topographic expression.

Composition: Largely compositions gradational between mudstone, siltstone, and very fine grained to fine-grained clay-saturated sandstone. Lesser well-sorted medium-grained sandstone, silica cemented at least in places, clayey in other places; porcelaneous shale and mudstone; and concretions.

Hardness: Mudstone, siltstone, and clayey fine sandstone firm where fresh and weathered; cemented medium-grained sandstone hard, clayey medium-grained sandstone quite firm where weathered; porcelaneous shale and mudstone hard to firm in weathered zone; concretions hard.

Bedding: None observed owing to poor exposures. Probably largely indistinct between gradational compositions.

Parting: None observed, probably little present.

Fracture: Mudstone to clayey fine sandstone has close to very close spacing of weathering fracture on probably moderate to wide original spacing; hard cemented sandstone has close to moderate spacing; quite firm sandstone has moderate spacing of weathering fracture; porcelaneous shale and mudstone have close spacing; concretions to moderate spacing.

Permeability: Bedrock has very low to low intergranular permeability, probably some low fracture permeability in shallow rock. Almost all mantle very low to low.

Weathering: All weathered to depths greater than 6 ft; weathered zone includes hard cemented rock.

Surficial mantle: Almost all clayey.

Expansivity: Most bedrock may be significantly expansive, some may be severely expansive. Most mantle is significantly expansive, some may be severely expansive. Sample L01, very mildly cracked silty clay soil, typical, free swell 75 percent. Unit locally includes more clayey soil.

Source: One station.

MAP UNIT 435

Geologic unit, (age), and location: Markley Formation (T), only between Briones Reservoir and Pinole Creek in the East Bay Hills.

Summary: Largely mudstone, some shale; some interbedded sandstone, especially near top of unit (Radbruch and Case, 1967). Near Pinole Valley, largely mudstone; near Briones Reservoir, largely sandstone. Most mantle and some or more bedrock is severely expansive.

Expression in aerial photographs: Mostly smooth soft topography, some intermediate topography; looks like Franciscan sheared rock (unit 801) and contains many small landslides. A few light-toned resistant bands 10-20 ft in width.

Composition: Largely mudstone, some shale, but especially near top of unit includes some sandstone interbedded with shale and mudstone. Sandstone is mostly medium to fine grained, micaceous, poorly to moderately sorted; most has some silt and clay matrix, much is glauconitic. Includes some beds of coarse-grained to very coarse grained glauconitic silty sandstone that commonly grade to medium-grained sandstone. Interbedded with sandstone are shale and silty to clayey mudstone, largely shale in distinctly bedded rock. Sandstone contains scattered elongate calcite-cemented concretions as large as medium, as well as bands and nodules cemented by iron oxide.

Hardness: Shale and mudstone have firm pieces. Sandstone mostly firm where weathered, some quite firm, minor hard. Concretions are hard.

Bedding: Probably largely indistinctly interbedded thin to medium beds of mudstone, dirty sandstone, and shale, but contains beds of mudstone and shale as thick as 5 ft or more. On aerial photographs, a few resistant beds on the order of 10-20 ft thick. Bedding is distinct and strikingly regular and repetitive in places near top of section (near Briones Reservoir), where thin to medium sandstone beds separate very thin to thin, some medium, beds of shale and mudstone; some sandstone beds

as thick as 4 ft; most thin to medium sandstone beds are internally laminated and many are graded; coarse and very coarse sandstone mostly in thick to very thick beds.

Parting: Largely absent. Near top of section, generally present at bedding planes (much at close to moderate spacing); in shale at very close spacing; in much sandstone at close to moderate spacing, producing slabs; much mudstone has crude parting at very close spacing.

Fracture: Shale and mudstone have close to very close spacing of weathering fracture, as does some dirty sandstone. In thin to medium beds of sandstone, moderate to wide spacing produces slabs; in thick and very thick beds of sandstone, moderate to 4-ft spacing.

Permeability: Intergranular permeability of shale and mudstone (most of unit) very low. Intergranular permeability of sandstone (some of unit) low, but possibly minor moderate in coarse-grained to very coarse grained sandstone. Possibly low fracture permeability in some shallow clayey rock. Most mantle very low, some moderate.

Weathering: To depths greater than 15 ft in sandstone (not seen fresh). Probably to depth of about 10 ft in mudstone and shale.

Surficial mantle: Largely clayey, some granular. Near Pinole Valley, mostly dark clay soil; sample BV3 represents the most severely cracked typical soil. Near Briones Reservoir, about 75 percent of soils are uncracked to very mildly cracked, like sample BV26A, and 25 percent are clayey, similar to sample BV26B. Soils near Pinole Valley are probably typical of most of unit. Much soil is thick, as much as 6 ft or more in the valley area.

Expansivity: Most bedrock is probably expansive, some or more is severely expansive. Most mantle severely expansive, some significantly expansive. Samples: BV1, moderately cracked weathered silty mudstone, free swell 100 percent; BV3, well-cracked dark clay soil, free swell 94 percent; BV26A, uncracked to very mildly cracked sandy and clayey soil, free swell 63 percent; BV26B, moderately cracked sandy clay soil in landslide, free swell 115 percent.

Stratigraphic thickness: More than 2,000 ft (bottom not exposed), as reported by Pease (1954), quoted by Radbruch and Case (1967).

Sources: Bartow, 1985; Radbruch, 1969; Radbruch and Case, 1967; Sheehan, 1956; five stations.

MAP UNIT 436

Geologic unit, (age), and location: Sidney siltstone unit (T), probably Sidney Flat Shale Member of Fulmer (1964) of the Markley Formation; only in Pacheco syncline, west of Concord.

Summary: Most to almost all is shale and mudstone; minor to some clay-saturated sandstone interbeds. Some very difficult trenching; rock has to be carved out. Most bedrock and mantle is severely expansive.

Expression in aerial photographs: Smooth, rounded, homogeneous dark-toned band. Mostly forms swales or nonresistant part of hogbacks.

Composition: Most to almost all is shale and mudstone; minor to some largely clay-saturated, fine- to medium-grained, moderately to poorly sorted, tuffaceous (pumiceous) sandstone that includes minor rounded, hard pebbles as much as 3 in. in diameter, mostly less than 1 in., scattered in clayey sandstone matrix. Shale and mudstone sequences include minor medium-grained sandstone, most clay saturated, some dirty, of low permeability. Abundant clay-saturated sandstone at sample locality PC6 is anomalous, probably mismapped. Rare hard cemented sandstone and concretions.

Hardness: Where weathered and fissility is developed, shale and mudstone have firm pieces and firm to soft rock mass. Sandstone is firm to soft where weathered, probably firm where fresh. Minor hard cemented sandstone and concretions.

Bedding: Largely absent, except as suggested by parting in shale. Distinct sandstone interbeds or bedded intervals are medium to very thick (as much as 8 ft). Hard sandstone beds and concretions medium to very thick (4 ft). Entire unit is shale and mudstone that have occasional sandstone interbeds.

Parting: In weathered shale at very close spacing; in partially weathered shale at very close to moderate spacing, slabby; absent in fresh shale, which behaves as mudstone. Present also at sandstone contacts.

Fracture: In shale and mudstone, weathering fracture has very close to moderate spacing, original fresh-rock fracture moderate to wide. Sandstone has close to moderate spacing of weathering fracture, moderate spacing of original fracture. Moderate to wide spacing in hard cemented sandstone and concretions.

Permeability: Intergranular permeability of almost all bedrock very low, minor low (in sandstone). Almost all mantle very low.

Weathering: Some shale is fresh at depth of 5 ft, all is fresh at 20 ft; between these depths, development of parting and fracture is gradational.

Surficial mantle: Almost all clayey. Clay soils are typical, some sandy clay soil.

Expansivity: Most to almost all bedrock is severely expansive. Most mantle severely expansive, minor to some significantly expansive. Bedrock samples: WC10, mudstone showing secondary fissility, free swell 91 percent; PC6B, weathered clay-saturated sandstone, moderately cracked, free swell 88 percent (exaggerated); WC17B, typical shale, free swell 93 percent. Surficial mantle samples: WC17A, typical clay soil, free swell 97 percent; PC6C, sandy clay soil, free swell 73 percent (exaggerated).

Sources: Bartow, 1985; Fulmer, 1964; four stations.

MAP UNIT 438

Geologic unit, (age), and location: Nortonville Shale (T), only in and near the monocline north of Mount Diablo.

Summary: Largely shale and mudstone, some or more of each; some interbedded sandstone both in medium to thick and in very thick beds, much of moderate permeability; minor hard cemented rock. Most bedrock expansive, most mantle severely expansive.

Expression in aerial photographs: Subdued intermediate to soft topography that is nonresistant and forms valleys; probably much landsliding. In many places forms dark-toned, smooth swale. Uniform except for two white bands 10 ft in width, which are probably cemented sandstone, and one local light-gray band 50 ft in width. Some very irregular, dark-toned landslide topography.

Composition: (1) Shale to mudstone, depending on fissility, much silty or sandy (Taff, 1935), includes concretionary layers (cemented both by iron oxide and calcite). (2) Siltstone. (3) Clean sandstone, moderately to well sorted, varying from fine to coarse grained; some or more is tuffaceous and consists of glass clasts, some beds consist entirely of glass clasts; some is calcite cemented in concretions and beds; much is of moderate intergranular permeability and produces gas at Los Medanos and Willow Pass fields. (4) Clayey sandstone, fine to medium grained, some grading to sandy claystone. (5) Laminated sandstone, fine grained, low permeability. (6) Limestone, fine grained, as beds and nodules. (7) Limestone breccia of hard limestone blocks in variably abundant, porous, crunchy calcite matrix of caliche or similar deposit; occurs locally on Lime Ridge. (8) Glauconitic sandstone, hard, included at base by Fulmer (1964). (9) Siliceous shale, hard (Fulmer, 1964).

Unit is largely shale and mudstone, some interbedded sandstone, minor to some siliceous shale, minor to locally (at Lime Ridge) some limestone, but estimates vary. Most sources imply largely mudstone and shale with lesser but significant sandstone. Details are: four shale and five sandstone members (Weaver, 1944); two shales and one sandstone lentil (Fulmer, 1964); shale and two lenticular sandstones (Taff, 1935); near Horse Valley, siltstone (Colburn, 1961); near Byron, 25 ft of clay shale and 8 ft of sandstone (Clark and Campbell, 1942). Of clayey rock, much of both shale (fissile) and mudstone. Of sandstone, some of each clean, clayey, cemented, and laminated.

Hardness: Mudstone and shale are firm where fresh and weathered; clean sandstone soft to firm where weathered; clayey and dirty sandstone firm

where fresh and weathered; cemented sandstone, concretions, and limestone hard to outcrop or near outcrop; siliceous shale hard.

Bedding: Most of composition 1 (mudstone and shale) is indistinctly to distinctly bedded in medium to 4-ft beds by thin to medium concretionary layers and sandstone beds or by differences in weathering fracture of shale. Sandstone occurs in thin to thick interbeds and as very thick (as much as 15-ft or more) beds; in places it occurs in intervals as thick as 50 ft or more of 6- to 15-ft beds separated by laminated to thinly bedded sandstone. Sandstone beds are reported to be as thick as 35 ft (Clark, 1964) and 85 ft (Fulmer, 1964). Hard cemented sandstone, limestone, and concretions largely in beds to thick, some as much as 4 ft. Limestone breccia is more than 30 ft in thickness. Siliceous shale described as "thinly bedded" (Fulmer, 1964). See section by Fulmer (1964).

Parting: In shale and mudstone at very close to close spacing, probably some moderate spacing; much is fissile. Also present at contacts with sandstone and at very wide (6- to 15-ft) spacing within some very thick sandstone intervals.

Fracture: In shale and mudstone, close to very close spacing of weathering fracture, superimposed on unknown original spacing, produces blanket of very small chips; moderate to wide spacing in very thick sandstone and in most hard cemented sandstone and limestone, but some hard cemented rock occurs in blocks as large as 6 ft in diameter.

Permeability: Intergranular permeability of mudstone and shale very low; siltstone low; clean sandstone moderate to low; clayey sandstone low to very low; limestone breccia moderate; limestone and siliceous shale very low, but have low to moderate fracture permeability in shallow rock. Thus, bedrock has largely very low intergranular permeability, some moderate to low. Most mantle very low, some moderate.

Weathering: Color change in shale and mudstone at depth of about 20 ft, but pieces are fresh at lesser depth.

Surficial mantle: Largely clayey, some granular. Typically clay soils.

Expansivity: Most bedrock expansive, most mantle severely expansive, some of each unexpansive. Bedrock samples: CL4B, well-cracked weathered shale, more expansive than most, free swell 170 percent; CL3B, typical weathered mudstone, free swell 100 percent (exaggerated). See samples for unit 465. Surficial mantle samples, all typical: AS14, dark well-cracked clay soil, free swell 148 percent; BHS21A, moderately cracked clay soil, free swell 137 percent; CL33, moderately cracked black sandy clay soil, free swell 180 percent; CL3D, brown popcorn clay soil, free swell 102 percent; CL4A, well-cracked clay soil, free swell 119 percent. In places clay soils are largely mildly cracked, probably significantly expansive.

Stratigraphic thickness: 725 ft near Nortonville (Fulmer, 1964); about 400 ft (Brabb and others, 1971); 500 ft (Clark and Woodford, 1927; Colburn 1961; Taff, 1935); 300-500 ft near Nortonville (Johnson, 1964); 500 ft (Clark, 1921); thins toward the east to about 100 ft near Horse Valley (Colburn, 1961); 33 ft near Byron (Clark and Campbell, 1942); 200 ft at Brentwood field (Clark, 1964).

Sources: Bartow, 1985; Brabb and others, 1971; Clark, 1921; Clark and Campbell, 1942; Clark and Woodford, 1927; Clark, 1964; Colburn, 1961; Fulmer, 1964; Johnson, 1964; Taff, 1935; Weaver, 1944; six stations.

MAP UNIT 439

Geologic unit, (age), and location: Nortonville Shale (T), only in area between Vallejo and Yolo Range, excluding Potrero Hills.

Summary: See description for unit 314.

MAP UNIT 440

Geologic unit, (age), and location: Nortonville Shale (T), only in Potrero Hills, northwest of Montezuma Hills.

Summary: Not seen in field. Largely silty shale and siltstone as described for unit 439, but includes some to nearly equally abundant sandstone as described for unit 314, largely in middle of unit. Sandstone is described as fairly hard, calcareous cemented, medium to fine grained (Bailey, 1930), and as moderately hard to locally hard and rippable in most cases (Cooper-Clark and Associates, 1973), in beds as thick as several feet. Shale bedrock rippable (Cooper-Clark and Associates, 1973). See description of unit 439 and sections by Tolman (1943) and Bailey (1930).

Expression in aerial photographs: Includes resistant ridges and nonresistant bands, both 200-400 ft in width.

Permeability, surficial mantle, expansivity: Like unit 439.

Stratigraphic thickness: 690 ft (Tolman, 1943); 750 ft (Bailey, 1930).

Sources: Bailey, 1930; Bartow, 1985; Cooper-Clark and Associates, 1973; Sims and others, 1973; Tolman, 1943; Weaver, 1949.

MAP UNIT 441

Geologic unit, (age), and location: Domengine Sandstone, lower part (T) (equivalent to Muir Sandstone of Weaver, 1953), only in Pacheco syncline, west of Concord.

Summary: Largely mudstone, containing minor thin to very thick (6-ft) clean to silty sandstone beds except in upper one-third of section where sandstone dominates. Some sandstone is calcite cemented, as beds and concretions. Most bedrock and mantle is expansive.

Expression in aerial photographs: Largely intermediate topography, some approaches hard topography. Underlies some ridges, but much is intermediate in resistance.

Composition: Mudstone (including some sandy claystone and shale) interbedded with sandstone. Upper one-third is largely sandstone; remainder is largely mudstone, minor sandstone. Sandstone is very fine to medium grained, mostly fine grained, includes tuffaceous grains, and ranges from clean, well-sorted, moderately permeable sandstone to silty and somewhat clayey sandstone of low permeability. Some sandstone beds are calcite cemented (about 25 percent at sample locality WC4).

Hardness: Sandstone is firm to soft and friable where weathered, probably firm where fresh; Weaver (1953) reported a tough silty sandstone 33 ft thick. Mudstone is firm where fresh, soft to firm where weathered. Calcite-cemented sandstone hard.

Bedding: Distinct. Largely thin to thick, some very thick, interbedded materials; mudstone is as thick as 20 ft or more, sandstone as thick as 33 ft but dominantly thin to 6-ft beds. Some sandstone is laminated. Hard sandstone beds medium to thick. Concretions as large as 5 ft in diameter. See section by Weaver (1953).

Parting: Present at bedding planes, and within most mudstone at close to very close spacing. Some fissile shale.

Fracture: Sandstone has close to wide spacing, in places moderate to wide, in other places close to moderate. Cemented sandstone fractured at spacing similar to bed thickness. Mudstone has close to very close spacing where weathered.

Permeability: Intergranular permeability of mudstone very low, silty sandstone low, clean sandstone low to moderate. Thus, lower two-thirds of bedrock section has almost all very low intergranular permeability, but upper one-third has largely low, some moderate, and some very low; intergranular permeability of unit as a whole largely very low, some low, minor to some moderate. Some low fracture permeability in shallow rock. Most mantle low to very low, probably some moderate.

Weathering: Sandstone weathered in places to depths greater than 40 ft, some to depths greater than 30 ft. Mudstone fresh at depth of 5 ft in places.

Surficial mantle: Largely clayey, probably some granular toward top of unit.

Expansivity: Most bedrock expansive, some severely expansive. Most mantle significantly expansive, probably some severely expansive, probably some unexpansive. Samples: WC3A, fresh (blue-gray) sandy claystone, mildly cracked, free swell 82 percent; WC3B, typical dark clay soil, free swell 70 percent (exaggerated). Most mudstone at locality WC3 is mildly cracked like sample WC3A. See samples for unit 442.

Stratigraphic thickness: 679 ft (Weaver, 1953).
Sources: Weaver, 1953; two stations.

MAP UNIT 442

Geologic unit, (age), and location: Domengine Sandstone, lower siltstone and claystone member (T), only along southwest flank of Mount Diablo.

Summary: Largely clayey rock, minor to some (as much as one-third) sandstone and cemented sandstone. Minor conglomerate at base. Much to most bedrock and most mantle are significantly expansive.

Expression in aerial photographs: Most is grass covered, regularly ribbed, on ridge held up by sandstone in unit 443. No tonal bands or outcrops. Generally more subdued than unit 343.

Composition: (1) Interbedded fine-grained clayey rock, largely ranging from mudstone through sandy mudstone to muddy very fine grained sandstone, but includes some shale and siltstone. (2) Sandstone, fine to medium grained, well sorted, moderate permeability. (3) Calcite-cemented sandstone, similar to uncemented sandstone in grain size and sorting, occurs as beds. (4) Limonite concretions, minor. (5) Conglomerate, probably of pebbles and cobbles in sandstone matrix.

Unit is largely clayey rock (composition 1); minor (less than 5 percent) to one-third (Dickerson, 1916) sandstone and cemented sandstone, each about equally abundant. Minor limonite concretions, minor conglomerate at base.

Hardness: Clayey rock is firm to quite firm where fresh and weathered. Sandstone firm where uncemented, hard where cemented. Conglomerate probably firm containing hard to lesser firm clasts. Limonite concretions firm to hard.

Bedding: About two-thirds of the clayey rock occurs in very thick beds, one-third in distinct thin to medium beds. Sandstone, both cemented and uncemented, occurs largely in distinct medium to thick beds between very thick (as much as tens of feet) intervals of clayey rock, but Dickerson (1916) showed one 20-ft sandstone bed. Conglomerate at base is 5 ft thick near Cave Point (Dickerson, 1916). Limonite concretions to medium. See sections by Dickerson (1916) and Colburn (1961).

Parting: Present in two-thirds of clayey rock largely at very widely spaced bedding contacts and to some extent at moderate to wide spacing within beds. In one-third of clayey rock, close to moderate spacing on bedding planes. Absent within sandstone and conglomerate.

Fracture: Clayey rock has close to very close spacing of weathering fracture on moderate to wide original spacing. Sandstone is fractured at spacing similar to bed thickness, largely moderate to wide, but contains rare hard blocks as large as 4 ft by 8 ft.

Permeability: Almost all bedrock has very low to low intergranular permeability, much of each; much has low fracture permeability in shallow rock. Minor to some (as much as one-sixth) moderate intergranular permeability (in uncemented sandstone). Most mantle low to very low.

Weathering: Clayey rock fresh at depths of 2-8 ft.

Surficial mantle: Largely clayey.

Expansivity: Much to most bedrock is significantly expansive, probably some severely expansive. Most mantle significantly expansive, probably some severely expansive. Samples: D15A, typical weathered mudstone, mildly cracked, free swell 66 percent; D15B, typical light brown silty and sandy clay soil, mildly cracked, free swell 72 percent. See samples for units 343 and 441.

Stratigraphic thickness: 300-600 ft (Brabb and others, 1971); 185 ft (inferred from Dickerson, 1916); 970 ft near Mount Diablo State Park and about 2,000 ft near Pine Canyon (inferred from Colburn, 1961).

Sources: Brabb and others, 1971; Colburn, 1961; Dickerson, 1916; two stations.

MAP UNIT 443

Geologic units, (age), and location: Domengine Sandstone, lower siltstone and claystone member and white sandstone unit (T), along southwest flank of Mount Diablo.

Summary: Largely clayey rock like unit 442, but near contact with unit 675 includes an interval of white sandstone 50-200 ft in thickness. Proportions of materials are similar to proportions in unit 442. Most to almost all bedrock has low to very low intergranular permeability, much has low fracture permeability in shallow rock; minor to some moderate intergranular permeability. Permeability of most mantle low to very low, minor to some moderate. Surficial mantle is largely clayey, minor to some granular. Expansivity is as described for unit 442.

Only the interval of white sandstone is described below; see description of unit 442 for composition and physical properties of most materials of this unit. Interval of white sandstone is almost entirely sandstone that apparently varies from largely uncemented to largely or entirely cemented. We did not observe the sandstone where largely cemented.

Expression in aerial photographs: Sandstone in places forms a sharp ridge, in other places a nonresistant light-toned band that is similar in resistance to remainder of unit 443.

Composition: (1) Sandstone, largely fine grained but contains some coarse and very coarse grained zones, well sorted, quartz rich, white weathering. (2) Calcite-cemented zones and concretions. (3) Clayey rock, consisting of mudstone to muddy fine sandstone.

Interval of sandstone consists largely of uncemented sandstone on Mount Diablo Road, but near Cave Point described as hard gray sandstone by Dickerson (1916); thus, probably variably cemented, from largely uncemented rock to largely cemented in places. Minor clayey rock within interval of sandstone.

Hardness: Uncemented sandstone is firm, some soft, where weathered, probably firm where fresh. Cemented rock hard. Interbedded clayey rock firm to quite firm.

Bedding: Sandstone in very thick (tens of feet) bed or beds. Near Mount Diablo State Park, cemented sandstone occurs in zones to thick, and concretions are as much as 4 ft in diameter. See sections by Dickerson (1916) and Colburn (1961).

Parting: Largely absent in sandstone.

Fracture: In sandstone, largely moderate to wide spacing, some as much as 4 ft, but could be very wide in very thick cemented sandstone. Much sandstone scales at very close spacing. Spacing in thick cemented sandstone is moderate. Interbedded clayey rock has close to very close spacing of weathering fracture on moderate to wide original spacing.

Permeability: Intergranular permeability of uncemented sandstone moderate to low, probably much of each, local high; cemented sandstone very low to low. Thus, intergranular permeability of sandstone varies from about half moderate, half low, to largely very low where cemented, but shallow cemented rock probably has low fracture permeability. Almost all mantle on sandstone moderate.

Weathering: Sandstone weathers white.

Surficial mantle: On sandstone, granular mantle similar to sample D12B of unit 343.

Expansivity: Almost all bedrock and mantle of sandstone interval is unexpansive.

Stratigraphic thickness: Sandstone interval 50-200 ft (Brabb and others, 1971); 40 ft (Dickerson, 1916); 60-140 ft (Colburn, 1961).

Sources: Brabb and others, 1971; Colburn, 1961; Dickerson, 1916; one station.

MAP UNIT 444

Geologic unit, (age), and location: Meganos Formation, Division E of Clark and Woodford (1927) (T), near Mount Diablo.

Summary: Probably largely mudstone and shale, some to equally abundant siltstone, some high-matrix sandstone, minor clean sandstone. Poor exposures make proportions uncertain. Most mantle and much or more bedrock is severely expansive.

Expression in aerial photographs: Largely nonresistant, underlies valleys or swales as in Horse Valley. Includes some areas of ribless inter-

mediate semiresistant topography that show some white shoulders and ridgetops. Largely lacks banding, but some very subdued banding of light-toned zones as wide as 100 ft. In places includes smooth, rounded hills that lack incised drainages. Largely dark-gray photographic tone. In Horse Valley, includes some barely resistant beds that show no tonal contrast but form lines of subdued bumps.

Composition: Different impressions from different workers. Includes: (1) Mudstone and shale, probably silty (Brabb and others, 1971), some fissile where weathered. (2) Siltstone, much fissile where weathered, some fine sandy. (3) Sandstone, fine grained, well sorted, largely clean, some grains look tuffaceous. (4) High-matrix sandstone, largely fine grained, ranging from very fine to medium grained. (5) Calcite-cemented concretions and beds.

Very different impressions of proportions from different workers: Brabb and others (1971) reported silty mudstone; Clark and Woodford (1927) and Clark (1921) reported clay shale and sandstone at top, grading downward to fine, massive, poorly indurated sandstone, poor exposures; Johnson (1964) reported chiefly siltstone, very minor sandstone. Our observations (from one traverse, sample locality BW5, and expression in aerial photographs) suggest largely mudstone and shale (much mudstone weathers fissile near surface), some siltstone and high-matrix sandstone, minor clean fine sandstone, rare cemented rock. Siltstone could be as abundant as mudstone in some sections, particularly toward east.

Hardness: Mudstone, shale, and siltstone are firm where fresh and weathered; clean sandstone weathers soft; dirty sandstone firm where fresh and weathered. Concretions and cemented beds hard.

Bedding: Probably largely absent or indistinct (in mudstone), but unit includes zones as thick as 100 ft that consist of thin to thick, some very thick (10 ft or more), distinctly bedded siltstone and high-matrix sandstone. Clean sandstone to thick; concretions and cemented beds medium.

Parting: Probably present in most weathered rock at very close to moderate spacing; much of mudstone, shale, and siltstone is fissile where weathered. Observed to be present at very close to moderate spacing in interbedded siltstone and sandstone.

Fracture: Probably close to very close spacing of weathering fracture on moderate to wide original spacing in mudstone and shale; observed close spacing, ranging from very close to moderate, of weathering fracture in siltstone on moderate original spacing. No fracture noted in clean sandstone (soft), probably close to moderate or wide spacing where present. High-matrix sandstone has very close to moderate spacing of weathering fracture, most scales where weathered. Concretions and cemented beds moderate to wide.

Permeability: Intergranular permeability of bedrock largely very low, some to equally abundant low, minor moderate (in sandstone). Most mantle very low, minor to some moderate.

Weathering: Weathering fracture in almost all of unit; fissility where weathered in much. Clean sandstone weathers soft.

Surficial mantle: Largely clayey, minor to some granular. Silty to sandy clay soils, like samples AS23 and AS25, are typical of unit. Silty clay soil, like sample AS24, and loam soil, like sample BW5B, are typical over resistant hills in unit.

Expansivity: Most bedrock is expansive, much or more is severely expansive. Most mantle severely expansive, minor to some unexpansive to significantly expansive. Samples: BW5A, weathered mudstone, typical of much of unit, free swell 110 percent; AS23, mildly to moderately cracked silty clay soil, plastic, free swell 120 percent; AS25, typical silty clay soil, free swell 140 percent; AS24, silty clay soil on sandstone and siltstone on hill, free swell 113 percent; BW5B, loam soil, substantial constituent, free swell 47 percent; BW5C, dark sandy clay soil, typical of low areas, free swell 90 percent.

Stratigraphic thickness: 50-1,300 ft (Brabb and others, 1971); 0-1,500 ft (Clark, 1921; Clark and Woodford, 1927); 0-700 ft (Johnson, 1964).

Sources: Brabb and others, 1971; Clark, 1921; Clark and Woodford, 1927; Johnson, 1964; four stations.

MAP UNIT 445

Geologic unit, (age), and location: Meganos Formation, Division C of Clark and Woodford (1927) (T), only north and east of Mount Diablo.

Summary: Largely shale, some sandstone interbeds. Most mantle and probably much bedrock are severely expansive.

Expression in aerial photographs: Nonresistant, valley-forming unit. In Deer Valley, about one-third is smooth-textured scarp slope of hogback, lacks ribbing; one-third is valley bottom; and one-third is very subdued, soft to intermediate topography held up by a few sandstone beds. In upper Deer Valley, unit forms very subdued, grass-covered, low-lying topography that has smooth texture and uniform photographic tone. Unit includes minor light-toned, resistant (sandstone) bands, some sharp crested, most 10-30 ft in width, some as wide as 100 ft; two or three bands at most in a given section. Some evidence of outcrop on some of these bands suggests cementation. Much landsliding evident in unit.

Composition: (1) Sandy and silty shale, some carbonaceous, some bituminous, some cherty, some containing limestone nodules and lenses (Davis and Vernon, 1951). Closely resembles Knoxville Formation (Clark and Woodford, 1927). Johnson (1964) called this siltstone. (2) Sandstone, fine to coarse grained and gritty, much clayey; some or more is hard and calcite cemented. Cemented beds are clean, well washed (Clark and Woodford, 1927). In places, includes minute lignite lenses (Clark and Woodford, 1927). Rusty concretions to medium. Locally fossiliferous.

Unit is largely shale, some sandstone interbeds. Of shale, probably minor to some is siliceous. Of sandstone, much is clayey, some or more is hard and cemented. Brabb and others (1971) described this unit as predominantly shale, many sandstone interbeds.

Hardness: Shale is firm where fresh and weathered; siliceous shale probably firm to hard; uncemented sandstone firm to soft where weathered, cemented sandstone hard where weathered.

Bedding: Sandstone in distinct medium to 5-ft and thicker beds between dominant shale. Cemented beds to medium or more. Shale is largely indistinctly bedded, some distinct (Clark, 1921). See column by Clark and Woodford (1927).

Parting: Present in shale at very close to close spacing; present on distinct bedding contacts.

Fracture: In shale, probably close to very close spacing of weathering fracture on probably moderate to wide original spacing. Fracture spacing in sandstone uncertain: where cemented, spacing is similar to bed thickness; where uncemented, probably indistinct fracture at wide to 10 ft.

Permeability: Intergranular permeability of shale very low; of sandstone low, to very low where cemented, probably moderate in weathered cemented sandstone. Thus, intergranular permeability of bedrock largely very low, some low, probably minor moderate in shallow rock. Probably some low to moderate fracture permeability in shallow rock. Most mantle very low, minor to some moderate.

Surficial mantle: Largely clayey, minor to some granular.

Expansivity: Most bedrock expansive, probably much severely expansive, some unexpansive. Most mantle severely expansive. Samples: BW4, mildly cracked silty clay soil, typical, free swell 90 percent; AS29A, well-cracked clay soil, free swell 100 percent (exaggerated); AS29B, moderately cracked sandy clay soil, probably typical of most of unit, free swell 120 percent. Weathered shale at sample locality BW4 has apparent expansivity similar to sample BW3 of unit 345, free swell 90 percent.

Stratigraphic thickness: 50-1,300 ft (Brabb and others, 1971); 325-555 ft (Clark and Woodford, 1927); 900 ft near Oil Creek to 1,800 ft near Deer Valley (Johnson, 1964).

Sources: Brabb and others, 1971; Clark 1921; Clark and Woodford, 1927; Davis and Vernon, 1951; Johnson, 1964; two stations.

MAP UNIT 446

Geologic unit, (age), and location: Meganos Formation, sandstone unit in Division C of Clark and Woodford (1927) (T), only north of Mount Diablo.

Summary: Not seen in field. Occurs in one area only, where unit clearly (from photographs) consists of about one-third ridge-forming sandstone, two-thirds swale-forming material similar to unit 445. Assume that sandstone is similar to units 345 and 377, remainder of unit identical to unit 445.

Expression in aerial photographs: Intermediate topography, more resistant than unit 445, but much less resistant than resistant units such as 345 and 377. Unit appears to define area of abundant sandstone within this division of Meganos Formation. Where pattern is clear, unit is banded as follows: sandstone ridge about 100 ft in width, 200-ft dark-toned swale, 100-ft zone of sandstone, 200-ft dark-toned band, 100-ft zone of sandstone; these zones of sandstone include bands 30-100 ft in width. Some sandstone crops out or nearly crops out.

Permeability: Intergranular permeability of bedrock probably largely very low, some to much low, minor to some moderate. Probably low to moderate fracture permeability in some shallow rock. Probably most mantle very low to low, some to much moderate.

Surficial mantle: Probably largely clayey, some to much granular.

Expansivity: Probably most bedrock is expansive like unit 445, much unexpansive. Most mantle expansive, probably much severely expansive, some to much unexpansive.

MAP UNIT 448

Geologic unit, (age), and location: Unnamed formation (T), only in Potrero Hills, northwest of Montezuma Hills.

Summary: Not seen in field. Largely silty and sandy shale, called micaceous carbonate shale by Tolman (1943); some arkosic sandstone, fine to medium grained, largely friable, locally concretionary, in beds probably to thick. See unit 473 and section of "Lower Meganos" by Tolman (1943).

Expression in aerial photographs: Subdued soft topography, some shows subtle banding.

Permeability: Intergranular permeability of bedrock is largely very low, some low to possibly moderate; measured permeability is $1x10^{-6}$ to $1x10^{-9}$ cm/sec (Cooper-Clark and Associates, 1973). Mantle very low.

Surficial mantle: Clayey.

Expansivity: Probably most bedrock is expansive and much is severely expansive. Almost all mantle severely expansive. Highly expansive silty to fat clay soil reported by Cooper-Clark and Associates (1973).

Sources: Cooper-Clark and Associates, 1973; Sims and others, 1973; Tolman, 1943.

MAP UNIT 449

Geologic unit, (age), and location: Martinez Formation, undivided (T), only in area west of Concord.

Summary: Not seen in field. Sedimentary rocks like those of units 451 and 474 (upper member) and units 425 and 426 (lower member). Probably largely mudstone and siltstone, some sandstone.

Permeability: Intergranular permeability of most bedrock probably very low to low, probably minor moderate. Probably most mantle very low to low, some moderate.

Surficial mantle: Probably largely clayey, some granular.

Expansivity: Probably most bedrock is expansive, some unexpansive. Probably most mantle is expansive, some or more is severely expansive, some unexpansive.

MAP UNIT 450

Geologic unit, (age), and location: Martinez Formation (T), only near Potrero Hills, northwest of Montezuma Hills.

Summary: Probably largely clayey rock, some sandstone. Probably most bedrock is expansive, most mantle severely expansive.

Expression in aerial photographs: Largely intermediate topography that lacks ribs, some soft topography in upper part.

Composition: Sandstone and clayey rock in uncertain proportions. Field observations show sandstone, fine grained and some medium grained, variably silty, and interbeds of sandy claystone, clay-saturated sandstone, and minor mudstone and siltstone; some silty mudstone weathers white. Also contains fossil-reef sandstone and minor pebble conglomerate that are argillaceous to well cemented.

Sandstone and claystone are about equally abundant in exposures we examined, and so unit probably consists largely of clayey rock. Variable impressions from literature: largely sandstone, medium to coarse grained (Tolman, 1943); lower part sandstone, upper part largely silty mudstone and shale (Cooper-Clark and associates, 1973); 75 percent or more silty to sandy clay shale, the remainder hard, fine- to medium-grained calcareous sandstone and concretionary sandstone in 1- to 20-ft beds (Bailey, 1930); largely shale containing 10 percent sandstone in 2- to 6-ft beds (Weaver, 1949). Thus, unit is probably largely clayey rock; some sandstone, largely in lower part of unit, some to much of which is cemented; minor conglomerate.

Hardness: Most sandstone firm where weathered, probably firm where fresh; calcite-cemented rock hard. Claystone and mudstone have firm pieces; mudstone has soft rock mass.

Bedding: Largely very thick (as much as 100 ft). Much of rock in very thick sandstone intervals has indistinct medium bedding, probably owing to variation in clay or silt content. Mudstone (minor) thick to 4 ft. Cemented rock to thick or more.

Parting: Present in mudstone (minor constituent) at very close spacing and at contacts between sandstone and claystone. Absent within sandy claystone. If unit consists largely of shale, may be present in much to most of unit at close to very close spacing.

Fracture: Where weathered, spacing is close to moderate in fine-grained sandstone, moderate to wide in medium-grained sandstone, close to very close in claystone and probably in shale, very close in mudstone. Fractures are open near ground surface.

Permeability: Intergranular permeability of sandstone mostly low, moderate where clean (20 percent of sandstone); sandy claystone, clayey sandstone, and mudstone very low. Thus, bedrock largely very low, some low, minor moderate. Measured permeability is $1x10^{-7}$ to $1x10^{-9}$ cm/sec, this probably in upper mudstone and shale (Cooper-Clark and Associates, 1973). Probably most mantle very low.

Weathering: To depths of more than 6 ft (height of cuts). Some mudstone remains gray where weathered.

Surficial mantle: Probably largely clayey. At one location, granular surface soil overlies expansive clayey subsoil, sample FS1B. Expansive fine sandy and silty clay soil reported, at least on upper mudstone and shale part of unit.

Expansivity: Probably most bedrock expansive, some unexpansive. Probably most mantle severely expansive. Bedrock sample FS1A, moderately cracked clay-saturated fine sandstone, free swell 74 percent. Bedrock has expansive zones (claystone) and unexpansive zones (sandstone). Surficial mantle samples: FS1B, sandy clay subsoil, well cracked, free swell 90 percent; FS2, dark clay soil, free swell 103 percent.

Stratigraphic thickness: 2,000 ft (Weaver, 1949); 1,000 ft (Tolman, 1943).

Sources: Bailey, 1930; Cooper-Clark and Associates, 1973; Sims and others, 1973; Tolman, 1943; Weaver, 1949; two stations.

MAP UNIT 451

Geologic unit, (age), and location: Martinez Formation, upper siltstone and shale member (T), only in area west of Concord.

Summary: Largely mudstone grading to clay-saturated sandstone, some interbedded low permeability firm sandstone. Prominent, resistant, 75-

ft sandstone bed at top of unit includes calcite-cemented zones as thick as 4 ft. Most mantle and probably most bedrock are expansive.

Expression in aerial photographs: Unit is largely nonresistant; much consists of soft hillslopes below some light-toned resistant bands that hold up ridges, some of which have sharp crests. Some to half of unit is moderately resistant intermediate topography. Good sections in aerial photographs show 70-ft light-toned resistant band at top of unit, 300- to 500-ft nonresistant band in middle part of unit, and semiresistant zone 100-300 ft in width near base of unit.

Composition: (1) Mudstone, sandy mudstone, and sandy claystone grading to clay- or mud-saturated fine- to medium-grained sandstone, including some siltstone. Minor concretions. (2) Shale. (3) Sandstone, undersaturated by clay, low permeability, probably fine to medium grained. (4) Sandstone, fine grained, moderately to well sorted, some glauconitic, some possibly tuffaceous (brittle). (5) Calcite-cemented zones in composition 4.

Unit is largely clayey rock (composition 1) of which mudstone is dominant, shale less abundant (probably minor). Some sandstone overall, but much of unit has minor sandstone. Resistant bed at top of unit is sandstone (composition 4) that contains cemented zones; semiresistant lower part of unit is sandstone (composition 3) interbedded with clayey sandstone of composition 1; nonresistant part is composition 1 containing minor sandstone beds.

Hardness: Clayey rock is largely firm where weathered, some soft, probably firm where fresh; many original fractures are cemented and distinctly firmer than adjacent rock. Sandstone largely firm, some brittle, minor hard except in resistant bed at top of unit where some is calcite cemented and hard. Concretions hard.

Bedding: Largely unbedded to indistinctly bedded clayey rock (composition 1). Minor to some distinct to indistinct (gradational) sandstone beds, most medium to 5 ft but ranging from thin to 15 ft, some isolated in clayey rock, some interbedded with about equally abundant clayey rock. Resistant sandstone bed at top of unit is internally laminated, about 75 ft thick containing thick to 4-ft calcite-cemented zones, and toward top and bottom grades to distinct medium to thick sandstone interbedded with thin to medium shale. Minor concretions to medium.

Parting: Probably widely spaced (not apparent) in most of clayey rock, present in some at very close to moderate spacing. Minor to some parting on distinct sandstone bedding contacts. Most of resistant bed at top of unit has wide spacing.

Fracture: Clayey rock has largely close to very close, some moderate, spacing of weathering fracture on moderate to 4-ft stained original spacing; some spheroidal weathering. Sandstone is fractured largely at close to moderate spacing, some wide; calcite-cemented sandstone has moderate to wide spacing, some as much as 4 ft.

Permeability: Clayey rock of composition 1 (most of unit) has very low to low intergranular permeability; sandstone (some of unit) largely low, minor possibly moderate. Most mantle very low to low, some moderate.

Weathering: Weathering fracture in most of unit; some spheroidal weathering. Some sandstone (composition 4) is weathered to depths greater than 25 ft.

Surficial mantle: Largely clayey, some granular.

Expansivity: Most bedrock probably expansive. Most mantle expansive, much severely expansive, probably some unexpansive. Two samples of typical soil on mudstone: WC31, brown clay soil, free swell 83 percent; WC36, light-brown sandy and silty clay soil, free swell 75 percent. See samples for unit 426.

Stratigraphic thickness: 700 ft.

Sources: Lawson, 1914; Merriam, 1897; four stations.

MAP UNIT 452

Geologic unit, (age), and location: Martinez Formation, lower glauconitic sandstone member (T), only at north end of the East Bay Hills near Crockett.

Summary: Like unit 425, but lacks most of lower sandstone part of section. Largely siltstone, mudstone, and clayey very fine grained sandstone, as described for units 425 and 474.

Permeability: Most bedrock has low to very low intergranular permeability; possibly much shallow bedrock has low fracture permeability. Probably most mantle low to very low.

Surficial mantle: Probably largely clayey.

Expansivity: Probably most bedrock significantly expansive. Probably most mantle significantly expansive, probably some severely expansive.

Sources: Four stations.

MAP UNIT 453

Geologic unit, (age), and location: Unnamed unit (TK), in Santa Cruz Mountains near Mount Madonna and Sierra Azul.

Summary: Briefly seen in field. Probably largely mudstone and shale, minor to some sandstone and conglomerate. Probably much to most mantle is severely expansive.

Expression in aerial photographs: Where expression is clear, intermediate topography that has rounded crests, most lacks ribs.

Composition: Described by McLaughlin and others (1971) as including: (1) silty shale that contains scattered carbonate concretions, (2) mudstone, (3) minor interbedded wacke sandstone. Field observation is of abundant blocks of sandstone and some conglomerate in largely clayey sand mantle. Thus, probably largely mudstone and shale, minor to some sandstone and conglomerate.

Hardness: Largely firm, some sandstone hard.

Bedding: Unknown. Distinct where interbedded sandstone.

Parting: Probably present in much of unit (shale and some mudstone) at very close to moderate spacing. Present at distinct bedding contacts.

Fracture: Probably most has close to very close spacing of weathering fracture on close to wide original spacing. Sandstone has close to 4-ft spacing.

Permeability: Intergranular permeability of bedrock largely very low, minor to some low (sandstone). Probably some to much low fracture permeability in shallow bedrock. Probably most mantle very low to low, minor to some moderate.

Surficial mantle: Probably most clayey, minor to some granular. Where observed, mantle is clayey sand to sandy clay.

Expansivity: Probably most bedrock expansive. Probably much to most mantle severely expansive. Sample LMP3, clayey colluvium, free swell 93 percent, more expansive than most soils at this station.

Sources: McLaughlin and others (1971); one station.

MAP UNIT 460

Geologic units, (age), and location: Purisima Formation, Lobitos Mudstone Member (T); Lambert Shale and San Lorenzo Formation, undivided (T); in San Mateo County. San Lorenzo Formation, undivided (T) and Rices Mudstone Member (T), in San Mateo and Santa Clara Counties.

Summary: Largely mudstone and siltstone, some shale, minor sandstone; rock is firm to soft. Some expansive bedrock and surficial mantle.

Composition: Largely mudstone and siltstone, some shale, minor sandstone.

Hardness: Firm to soft.

Bedding: Mostly absent, locally very thin.

Parting: Close to very close spacing in some or more.

Fracture: Moderate to wide spacing where fresh; very close to close spacing, locally moderate, where weathered.

Permeability: Intergranular permeability of bedrock largely very low, some low (in some interbedded sandstone and siltstone). Low fracture permeability in most shallow rock. Mantle largely low, minor moderate(?).

Surficial mantle: Largely clayey.

Expansivity: Bedrock and surficial mantle are largely unexpansive, some significantly expansive, minor severely expansive. Bedrock samples: SGG4B, mudstone, free swell 64 percent; MH4B, siltstone, free swell 80 percent; MH4A, clay shale, free swell 88 percent. Surficial mantle samples: HMB1, loam soil, free swell 52 percent; SGG4A, soil, free swell 68 percent; LH8, moderately cracked soil, free swell 70 percent; LH9, organic soil, free swell 102 percent.

Stratigraphic thickness: 500-1,800 ft.

Source: Ellen and others, 1972.

MAP UNIT 461

Geologic units, (age), and location: San Lorenzo Formation, Twobar Shale Member (T); Butano Sandstone, shale member (T); shale near Palo Alto (K); in San Mateo County.

Summary: Shale and some mudstone, minor interbedded sandstone. Some significantly expansive bedrock and mantle.

Composition: Shale and some mudstone, minor interbedded sandstone.

Hardness: Soft to firm.

Bedding: Shale is laminated.

Parting: Close to very close spacing in most.

Fracture: Close spacing in weathered rock.

Permeability: Largely very low intergranular permeability in bedrock, low in interbedded sandstone (minor). Low fracture permeability in most shallow bedrock. Mantle low.

Surficial mantle: Largely clayey.

Expansivity: Bedrock and surficial mantle are largely unexpansive, some significantly expansive. Samples: MH15A, bedrock, free swell 67 percent; MH15B, stony soil, moderately to well cracked, free swell 56 percent. Compare samples MH3A and MH3B in unit 370.

Stratigraphic thickness: 600(?)-800 ft.

Source: Ellen and others, 1972.

MAP UNIT 465

Geologic unit, (age), and location: Nortonville Shale (T), only in Pacheco syncline, west of Concord.

Summary: Shale and mudstone, minor interbedded sandstone. Some difficult trenching in fresh, nonfissile rock. Almost all bedrock and mantle is expansive. See unit 438.

Expression in aerial photographs: Mostly nonresistant, forms swales.

Composition: Almost all is silty shale and mudstone; minor interbedded sandstone and rare porcelaneous shale. Rock shows good fissility in large part where weathered, but fresh rock has mudstone structure. Sandstone interbeds range from fine to coarse grained and from clean to silty to clay saturated; they are mostly moderately sorted, and some are calcite cemented and hard.

Hardness: Shale and mudstone are firm where fresh and weathered. Sandstone is soft to firm where weathered, firm where fresh. Cemented sandstone is hard.

Bedding: Much of shale and mudstone is laminated. Sandstone interbeds are distinct, from thin to very thick (8 ft), mostly thin to 4 ft, between very thick shale. Weaver (1953) described sandstone beds as thick as 25 ft.

Parting: Present in most weathered rock at close to very close spacing, absent in some; absent in fresh rock except at distinct bedding planes, which are uncommon and very widely spaced. Parting develops upon brief weathering of fresh rock.

Fracture: Very close to close spacing of weathering fracture in shale and mudstone, developed on moderate to wide original spacing. Sandstone has mostly moderate to wide spacing, some close; cemented sandstone wide.

Permeability: Shale and mudstone have very low total permeability. Most sandstone has low intergranular permeability, rarely moderate. Thus, almost all bedrock has very low total permeability, minor low to locally moderate intergranular permeability. Almost all mantle very low.

Weathering: Shale and mudstone are fresh at depth of 50 ft, probably weathered to depth of about 10 ft. Some sandstone is fresh at depth of 8 ft, other sandstone is weathered to depths greater than 30 ft. Fissility develops rapidly (a few weeks) on exposed surfaces of fresh shale and mudstone.

Surficial mantle: Almost all clayey. Typically dark clay soils.

Expansivity: Almost all bedrock and mantle is expansive, probably most is severely expansive. Bedrock samples: WC6A, typical mudstone, free swell 110 percent; WC7A, typical weathered mudstone, free swell 99 percent (exaggerated). Surficial mantle samples: WC6B, mildly cracked soil on mudstone, typical, free swell 100 percent; WC7B, moderately cracked dark clay soil on mudstone, typical, free swell 111 percent; PC7, typical clay soil, free swell 80 percent (exaggerated).

Sources: Bartow, 1985; Weaver, 1953; five stations.

MAP UNIT 466

Geologic unit, (age), and location: Nortonville Shale, upper shale unit (T), in area at southern end of Yolo Range near Vacaville.

Summary: See description for unit 314.

MAP UNIT 467

Geologic unit, (age), and location: Nortonville Shale, lower shale unit (T), in area at southern end of Yolo Range near Vacaville.

Summary: See description for unit 314.

MAP UNIT 468

Geologic unit, (age), and location: Meganos Formation, Division C of Clark and Woodford (1927) (T), only in and near Pacheco syncline, west of Concord.

Summary: Almost all is mudstone and shale, shale slightly dominant; minor interbedded sandstone. Almost all bedrock and mantle is expansive, much to most of each severely expansive.

Expression in aerial photographs: Nonresistant, smooth, forms swales and low-lying areas. Many landslides where held up by more resistant units.

Composition: Almost all is shale and mudstone; minor interbedded sandstone; rare limestone. Mudstone and shale have gradational proportions of silt, clay, and sand, but nearly all of these materials are clay saturated; much is silty, some sandy. Interbedded sandstone includes very fine grained sandstone, some tuffaceous, some silty; fine-grained well sorted clean sandstone; and clay-saturated fine- to medium-grained sandstone. One bed of aphanitic limestone. More than 95 percent of unit is mudstone and shale, shale slightly dominant. Shale is not very fissile and much of unit could be called either mudstone or shale.

Hardness: Mudstone and shale are firm where fresh and where moderately weathered; rock mass is soft where weathering fracture is well developed or when wet. Sandstone is firm except where extremely weathered, and some tuffaceous sandstone is firm and brittle. Limestone hard.

Bedding: Largely absent except for local distinct thin to very thick (as much as 6-ft or more) beds of sandstone, mostly medium to thick, between medium to very thick (tens of feet) mudstone and shale. Some very thick (about 30-ft) intervals of uncommonly expansive clayey rock. Limestone bed medium. Thin to medium indistinct interbedding in some sandstone.

Parting: Present in shale (about half of unit) at very close to close spacing, absent in mudstone (about half of unit). Also present at sandstone contacts.

Fracture: In mudstone and shale, moderate to wide spacing of original fracture; spacing of weathering fracture varies with grain size of rock and ranges from very close to close and some moderate. Mudstone weathers spheroidally on weathering fracture. Sandstone is fractured at close to moderate spacing, and some has moderate to wide original spacing. Limestone has moderate spacing.

Permeability: Almost all bedrock has very low intergranular permeability, minor low (in some sandstone); probably some low fracture permeability in shallow rock. Most mantle very low, possibly some low.

Weathering: Abundant free clay. Mudstone and shale are weathered to depths of 5-7 ft; pieces fresh at 8 ft, weathered along fractures. Depth of weathering in sandstone variable, depending on permeability.

Surficial mantle: Clayey. Uniform dark clay soil.

Expansivity: Almost all bedrock and mantle is expansive, much to most of each severely expansive. Bedrock samples: WC13B, typical shale, mildly cracked surface, free swell 81 percent; PC9, typical weathered shale, free swell 89 percent (exaggerated); PC15, unweathered clayey siltstone, free swell 80 percent; WC5, sperhoidally weathered mudstone, free swell 65 percent; WC13A, 30-ft bed of clayey rock, more expansive than most, free swell 95 percent; WC37, weathered shale, free swell 98 percent. Surficial mantle sample PC10, typical clay soil, free swell 77 percent.

Stratigraphic thickness: About 1,000 ft.

Sources: Clark and Woodford, 1927; Weaver, 1953; eight stations.

MAP UNIT 469

Geologic unit, (age), and location: Meganos Formation, Division C of Clark and Woodford (1927) (T), only at north end of the East Bay Hills near Crockett.

Summary: Largely mudstone, some shale, and occasional thin to rarely thick very fine grained sandstone and siltstone, much of which is cemented. Almost all bedrock and mantle is severely expansive.

Composition: Uniform mudstone and some (about 20 percent) shale. Contains scattered thin to medium beds and concretions of very fine grained sandstone and siltstone cemented by calcite and iron oxide; also rare medium to thick beds of clayey fine-grained sandstone. Minor fine-grained to very fine grained silty and clayey sandstone along State Route 4.

Hardness: Firm pieces where fresh, firm to soft where weathered. Scattered beds of calcite-cemented sandstone and siltstone hard. Rare beds of clayey fine sandstone quite firm.

Bedding: Absent except for scattered distinct sandstone and siltstone beds, many of which are discontinuous.

Parting: Good parting at very close spacing in about 20 percent of rock. About 60 percent of rock is anisotropic but lacks continuous planes of parting; this rock weathers spheroidally, then spheroids part parallel to bedding.

Fracture: Largely spheroidal weathering on very close to moderate, mostly close, spacing in mudstone and shale. Sandstone and siltstone beds have close to moderate spacing.

Permeability: Almost all bedrock has very low intergranular permeability, minor low. Almost all mantle very low.

Weathering: Weathers to depths less than 30 ft; we estimate about 10 ft. Fresh (bluish-gray) at 50 ft.

Surficial mantle: Almost all clayey. No soil observed.

Expansivity: Almost all bedrock and mantle is severely expansive. One sample, BN20, mildly cracked mudstone, typical, free swell 100 percent.

Sources: Two stations.

MAP UNIT 470

Geologic unit, (age), and location: Vacaville Shale of Merriam and Turner (1937) (T), west of Napa.

Summary: Not seen in field. Reported to be largely shale, some sandy mudstone. Probably most to almost all bedrock and mantle is severely expansive.

Expression in aerial photographs: Low-lying, forms valley.

Composition: Reported to be largely shale, some sandy mudstone.

Hardness: Firm, some soft where weathered.

Bedding: Weaver (1949) described unit as thick bedded.

Parting: Probably present in most of unit at close to very close spacing.

Fracture: Probably close to very close spacing of weathering fracture superimposed on close to moderate original spacing.

Permeability: Probably very low intergranular permeability in bedrock. Mantle probably very low.

Weathering: Unknown, probably to depths of 5-10 ft.

Surficial mantle: Probably clayey, similar to mantle on units 471 and 472.

Expansivity: Probably most to almost all bedrock and mantle is severely expansive. See samples for unit 471.

Stratigraphic thickness: 500-1,000 ft (Weaver, 1949).

Sources: Fox and others, 1973; Weaver, 1949.

MAP UNIT 471

Geologic unit, (age), and location: Capay Formation (T), only north of Vacaville along east side of Yolo Range.

Summary: Almost all firm clayey mudstone. Much to almost all bedrock and mantle is severely expansive.

Composition: Almost all is clayey mudstone, poorly fissile if at all. At top of section, about 3 ft of sandy and glauconitic mudstone is underlain by more than 3 ft of very fine grained sandstone. Possibly some siliceous rock (compare unit 472).

Hardness: Firm where weathered, probably firm where fresh.

Bedding: Glauconitic mudstone is a distinct bed; remainder of unit is indistinctly bedded to unbedded.

Parting: Largely absent; may be developed locally in clayey mudstone.

Fracture: Very close spacing of weathering fracture in clayey mudstone (almost all of unit); close to moderate spacing in weathered glauconitic mudstone and very fine sandstone.

Permeability: Clayey mudstone (almost all of unit) has very low intergranular permeability; glauconitic mudstone and very fine sandstone low. Very low in mantle.

Weathering: Clayey mudstone weathered to depths greater than 3 ft. Glauconitic mudstone and very fine sandstone weathered to depths greater than 8 ft.

Surficial mantle: Clayey.

Expansivity: Most to almost all bedrock and mantle is severely expansive. Samples: MV21A, weathered clayey mudstone, free swell 128 percent; MV21B, well-cracked clayey soil, free swell 129 percent.

Sources: Sims and others, 1973; Weaver, 1949; two stations.

MAP UNIT 472

Geologic unit, (age), and location: Capay Formation (T), only in Potrero Hills, northwest of Montezuma Hills.

Summary: Not seen in field. Shale, interbedded with lesser sandy mudstone and cherty shale (Cooper-Clark and Associates, 1973); contains numerous concretions (Weaver, 1949). Minor cemented fossil reef sandstone, bentonite, and abundant limonitic phosphatic(?) interbeds (see section by Tolman, 1943). Fresh bedrock is rippable to marginally rippable (Cooper-Clark and Associates, 1973). See unit 471.

Expression in aerial photographs: Largely nonresistant soft topography, valley bottom; some subdued intermediate topography.

Permeability: Probably almost all bedrock has very low intergranular permeability; measured permeability is $1x10^{-8}$ to $1x10^{-10}$ cm/sec (Cooper-Clark and Associates, 1973). Probably low to moderate fracture permeability in minor to some shallow bedrock. Mantle probably very low.

Surficial mantle: Clayey.

Expansivity: Probably most to almost all bedrock is severely expansive. Almost all mantle is severely expansive. Highly expansive silty to fat clay soils reported by Cooper-Clark and Associates (1973). See samples for unit 471.

Stratigraphic thickness: 300 ft (Weaver, 1949); 400 ft (Tolman, 1943).

Sources: Cooper-Clark and Associates, 1973; Sims and others, 1973; Tolman, 1943; Weaver, 1949.

MAP UNIT 473

Geologic unit, (age), and location: Unnamed formation (T), only along east side of Yolo Range north of Vacaville.

Summary: Probably almost all firm sandy mudstone, fissile in part. Poorly exposed. Severely expansive mantle on half or more of unit.

Composition: Sandy mudstone, fissile in part; minor to possibly some well-sorted, friable sandstone near contact with unit 315.

Hardness: Firm where weathered, probably firm where fresh.

Bedding: Probably largely absent; not observed in poor exposure. Some distinct interbedding with sandstone near contact with unit 315, where medium to very thin beds of sandstone occur between very thin to thin beds of fissile mudstone.

Parting: Present in part at very close to close spacing (fissile), absent in part.

Fracture: Close to very close spacing of weathering fracture.

Permeability: Largely very low intergranular permeability in bedrock, minor to possibly some low to moderate. Most mantle very low, possibly much moderate.

Weathering: Small pieces partially weathered at depth of 6 ft; color change at depths greater than 6 ft.

Surficial mantle: Most to almost all is clayey; much surficial soil is granular. Clayey soil, like sample MV20, is representative of surficial soil in about half of unit. Other half has uncracked granular surficial soil, which is probably transported from upslope but may be derived from sandstone within unit.

Expansivity: Probably most to almost all bedrock is expansive. Most to almost all mantle is severely expansive. Sample MV20, typical moderately cracked clayey soil or weathered bedrock, free swell 120 percent.

Sources: Sims and others, 1973; Tolman, 1943; two stations.

MAP UNIT 474

Geologic unit, (age), and location: Martinez Formation, upper siltstone and shale member (T), only near Carquinez Strait, southeast of Vallejo.

Summary: Uniform composition of fine-grained clayey rock. Almost all bedrock is significantly expansive, much mantle includes severely expansive subsoil. Poor cut-slope stability.

Composition: Almost all is clayey rock consisting of siltstone, very fine sandy siltstone, silty and clayey very fine grained sandstone, and silty mudstone; these materials are similar in properties. Includes rare fine- to medium-grained sandstone that is cemented, and calcite-cemented concretions to large.

Hardness: Firm pieces, some approaching hard, in siltstone and other clayey rock. Concretions and rare sandstone bed are hard.

Bedding: Mostly absent, some indistinct at medium to thick. Rare sandstone as a distinct medium bed.

Parting: Absent.

Fracture: Mostly close spacing of weathering fracture; some moderate in very fine grained sandstone.

Permeability: Low to very low intergranular permeability in bedrock. Possibly low fracture permeability in much shallow bedrock. Most to almost all mantle very low to low.

Weathering: To depths greater than 20 ft except in medium blocks of very fine grained sandstone. Weathers from fractures inward. Much slumping of cuts.

Surficial mantle: Most to almost all is clayey. About half of unit has silty clay subsoil similar to sample BN15.

Expansivity: Almost all bedrock is significantly expansive. Much mantle severely expansive (subsoil), much significantly expansive. Samples: BN15, moderately cracked silty clay subsoil, free swell 90 percent; BN16, typical silty mudstone, mildly cracked, free swell 63 percent. All bedrock exposed in cuts shows mild cracking that suggests expansivity similar to sample BN16.

Sources: Lawson, 1914; Merriam, 1897; two stations.

MAP UNIT 500

Geologic units, (age), and location: Purisima Formation, Pomponio Mudstone Member (T); Monterey Group (T) (called Monterey Shale on source map); Santa Cruz Mudstone (T); Lambert Shale (T); in San Mateo County part of Santa Cruz Mountains.

Summary: Largely porcelaneous rock. Bedrock and surficial mantle are largely unexpansive, some of each significantly expansive (where bedrock is not siliceous).

Composition: Largely porcelaneous shale and mudstone; some chert, some nonsiliceous mudstone, minor sandstone.

Hardness: Typically hard to firm and brittle; chert hard, nonsiliceous mudstone firm to soft, sandstone firm to hard.

Bedding: Ranges from absent to distinct medium to very thick beds; chert and some porcelaneous rock are laminated.

Parting: Some has very close to locally moderate spacing.

Fracture: Very close to close spacing, locally moderate.

Permeability: Bedrock has largely very low intergranular permeability, minor low (in interbedded sandstone). Low to locally moderate fracture permeability in shallow rock. Mantle moderate to low, some possibly very low.

Surficial mantle: Granular to clayey.

Expansivity: Bedrock and surficial mantle are largely unexpansive, some of each significantly expansive (where bedrock is not siliceous). Bedrock samples: FP1B, bedrock, free swell 56 percent; LH5, mudstone, free swell 78 percent; HMB4, bedrock(?), free swell 72 percent; MH5, black claystone, free swell 59 percent. Surficial mantle samples: MH11, dark gray soil, free swell 37 percent; MH8, soil, free swell 48 percent; LH6, soil, free swell 74 percent; FP1A, uncracked soil, free swell 82 percent.

Stratigraphic thickness: 400-5,000 ft.

Source: Ellen and others, 1972.

MAP UNIT 501

Geologic unit, (age), and location: Monterey Group (T), only in foothills of Santa Cruz Mountains near Los Gatos.

Summary: Largely closely parted firm porcelaneous shale and siltstone, minor to some soft clean sandstone interbeds of moderate permeability. Minor clay and ash beds, shale partings, hard porcelanite, pebble conglomerate, and limey beds, and minor to some nonsiliceous firm siltstone. Minor expansive bedrock, some severely expansive mantle.

Expression in aerial photographs: Resistant intermediate topography, much approaching hard topography. Some banding in places, not obvious generally.

Composition: (1) Porcelaneous shale and siltstone, white weathering, abundant microfossils, containing occasional sand grains and very small pebbles. (2) Shale partings between porcelaneous beds. (3) Sandstone, medium grained, some to coarse grained, well to moderately well sorted, clean, minor calcite cemented. (4) Porcelanite. (5) Clay or ash beds, bentonitic (Bailey and Everhart, 1964). (6) Limy beds. (7) Nonsiliceous foraminiferal siltstone. (8) Conglomerate (Bailey and Everhart, 1964) of pebbles and some cobbles as much as 4 in. in diameter. (9) Dolomite concretions (McLaughlin and others, 1971).

Unit is largely porcelaneous rock (composition 1); much contains shale partings. Minor to some interbedded sandstone of which minor is calcite cemented; minor porcelanite, clay or ash beds, limy beds, and conglomerate. Minor to some nonsiliceous siltstone.

Hardness: Porcelaneous rock is firm where fresh and weathered; porcelanite hard; sandstone soft where weathered and probably where fresh, hard where cemented; clay and ash beds soft to firm; nonsiliceous siltstone firm.

Bedding: Porcelaneous rock is laminated, and much has distinct very thin to thin shale partings between thin to medium beds of porcelaneous rock.

Sandstone occurs in medium to very thick (20-ft) distinct beds, in concentrations ranging from one medium bed in 10-30 ft of porcelaneous rock to as much as some of section. Clay and ash occur in medium, some thick, beds about every 15 ft of section in places. Nonsiliceous siltstone in very thin to medium beds between shale partings. Calcite-cemented sandstone as thick as 4 ft.

Parting: In porcelaneous rock, largely close spacing, ranging from very close to moderate; absent within sandstone. Present at very close to moderate spacing in some to most nonsiliceous siltstone. Thus, present at close spacing in most of unit.

Fracture: Close to moderate spacing of cross-fracture in porcelaneous rock and porcelanite; close to moderate or absent in sandstone; close to moderate in nonsiliceous siltstone. Thus, largely close to moderate spacing.

Permeability: Porcelaneous rock and porcelanite have very low to low intergranular permeability, and low to possibly moderate fracture permeability in shallow rock; not an aquifer (California State Water Resources Board, 1955). Intergranular permeability of sandstone moderate, of shale and clay beds (compositions 2, 5) very low, of nonsiliceous siltstone low to very low. Thus, intergranular permeability of most bedrock very low to low, minor to some moderate; most shallow rock has low to possibly moderate fracture permeability. Much mantle moderate, much low to very low.

Weathering: Sandstone weathered to depths greater than 20 ft. Porcelaneous rock shows little effect of weathering except white color and opening of fractures.

Surficial mantle: Much granular, much clayey. Largely uncracked silty to clayey soil, some stony, but includes some dark, cracked silty clay soil, such as sample LOG1A.

Expansivity: Most bedrock unexpansive, minor expansive (bentonitic clay or ash interbeds). Most mantle unexpansive to significantly expansive, some severely expansive. Bedrock sample LOG1B, white waxy clay interbed, free swell 61 percent. Bailey and Everhart (1964) reported bentonitic interbeds. Surficial mantle samples: LOG1A, typical mildly cracked black silty clay soil, free swell 110 percent; LOG9, moderately cracked silty clay soil, typical, free swell 52 percent; LOG10, sandy silty clay soil, free swell 51 percent.

Stratigraphic thickness: 1,300 ft (Bailey and Everhart, 1964).

Sources: Bailey and Everhart, 1964; California State Water Resources Board, 1955; McLaughlin and others, 1971; six stations.

MAP UNIT 503

Geologic unit, (age), and location: Monterey Group, shale unit (T), only in area north of Castro Valley in the East Bay Hills.

Summary: Not seen in field, composition and proportions uncertain.

Expression in aerial photographs: Intermediate topography that shows some sharp ribs of resistant rock crossing crests. About half is fairly resistant and forms knobs; about half is darker in tone and underlies broad trough in crest.

Composition: Unit includes both resistant siliceous rock and less resistant, less siliceous rock. Probably consists of some porcelaneous shale or mudstone, much subporcelaneous shale or mudstone, some to much nonsiliceous shale or mudstone, and minor to some sandstone.

Physical properties: Probably like similar materials in units 504 and 507.

Permeability: Most to almost all bedrock has very low intergranular permeability. Much to most shallow bedrock has low to possibly moderate fracture permeability. Much(?) mantle moderate, much(?) low to very low.

Surficial mantle: Granular to clayey, much(?) of each.

Expansivity: Probably most bedrock is unexpansive, much may be expansive. Probably some to much mantle unexpansive, much to most expansive.

Sources: Newton, 1948; Robinson, 1956.

MAP UNIT 504

Geologic unit, (age), and location: Monterey Group, shale unit (T), only near eastern margin of the East Bay Hills north of Alamo.

Summary: Largely firm, brittle, subporcelaneous to porcelaneous mudstone; some sandstone. Probably most mantle severely expansive.

Expression in aerial photographs: Intermediate topography, small area.

Composition: Largely firm, brittle, subporcelaneous to porcelaneous mudstone; probably some mudstone is nonsiliceous. Some fine- to medium-grained sandstone that contains matrix sufficient for low permeability.

Hardness: Where weathered and probably where fresh, mudstone is largely firm and brittle, mostly quite firm, and contains about 30 percent hard pieces. Sandstone largely firm where weathered, some soft.

Bedding: Siliceous mudstone occurs largely in very thick beds that are internally indistinctly bedded. Occasional thin to very thick (as much as 6-ft or more) sandstone interbeds. Near interbedded sandstone, siliceous mudstone becomes more thinly bedded, down to thin.

Parting: Largely absent. Present at contacts between sandstone and mudstone, and rarely on indistinct bedding within mudstone.

Fracture: Mudstone has close to moderate original spacing and very close to close spacing of weathering fracture, some to moderate in sandier beds. Weathers to spheroidal pieces.

Permeability: Intergranular permeability of most bedrock very low, some low (sandstone). Most shallow bedrock has low to possibly moderate fracture permeability. Probably most mantle very low to low.

Weathering: Weathering fracture to depths greater than 15 ft.

Surficial mantle: Probably largely clayey. Dark sticky clay soil appeared typical at the one station observed.

Expansivity: Probably most bedrock unexpansive, some probably expansive. Probably much to most mantle severely expansive.

Sources: Ham, 1952; one station.

MAP UNIT 506

Geologic unit, (age), and location: Monterey Group, Claremont Shale (T), only near Oakland in the East Bay Hills.

Summary: Largely hard siliceous shale repetitively interbedded with firm shale. Hard sandstone beds, thick to very thick (4 ft), especially near base of unit, may require blasting (Radbruch, 1969). Most mantle significantly expansive.

Expression in aerial photographs: Resistant unit, forms hard crest of Berkeley Hills above Caldecott tunnel. To south, intermediate to hard crests and very regular ribbing; some zones of soft topography, about 300 ft in width, near top of ridge.

Composition: Largely hard, bituminous siliceous shale, mostly porcelanite and some chert, repetitively interbedded with firm, silty, slightly siliceous shale. In places, unit consists largely of fissile porcelaneous shale that includes some firm shale but lacks repetitive interbedding. Includes very thick beds of shale that lack interbedded chert and porcelanite, mudstone (Page, 1950), and fine- to medium- to less commonly coarse-grained sandstone, much of which contains abundant tuffaceous matrix (to saturation) and some of which (10 percent) is silicified or carbonate cemented and hard. In places, as much as 40 percent of unit may be firm shale or sandstone. Includes dikes of altered diabase that contain 10-35 percent clay, as well as scattered concretions and beds of siliceous, ferruginous limestone and dolomite. Lawson (1914) distinguished cherty bituminous shale of this unit from soft, chalky bituminous shale resembling diatomaceous earth that is present along with cherty rock in Sobrante anticline area (unit 534). Some gas (methane) and oil encountered in tunnelling fresh rock. Radbruch and Case (1967) reported chert dominant in Berkeley Hills, siliceous shale and tuffaceous sandstone dominant elsewhere. Sheehan (1956) noted that thinning of unit is at expense of sandstone; that is, where unit is thin it is largely siliceous shale.

Hardness: Porcelanite, chert, and porcelaneous shale have hard pieces, both where fresh and weathered. Weathering opens very close fractures,

producing firm rock mass in places. Shale interbeds and very thick intervals are firm, possibly hard where fresh (Page, 1950). Some sandstone is hard where fresh and weathered; most is firm where fresh, soft to firm where weathered. Limestone and dolomite beds and concretions are hard; diabase dikes soft to hard; mudstone encountered in Broadway tunnel quite firm.

Bedding: Consists largely of distinctive, repetitive, thin to medium distinct beds of siliceous shale between thin, some medium, beds of firm shale: bedding in this rock is folded in places. Less common thick to very thick (4-ft) beds of siliceous shale. Much siliceous shale is laminated. In places consists of laminated porcelaneous shale without repetitive firm shale interbeds. Some intervals of firm shale or mudstone as thick as 15 ft, and aerial photographs suggest shale or firm sandstone in zones as thick as 300 ft in one place. Hard sandstone occurs as medium to very thick (4-ft) distinct beds, firm sandstone as dikes and beds as thick as 80 ft or more without internal bedding. Limestone and dolomite occur as isolated lenticular beds and elongate spheroidal masses to thick. Diabase dikes are mostly 1-10 ft, but as thick as 20 ft, and irregular in form.

Parting: On bedding planes, largely at close to moderate spacing, and within very thick shale intervals at very close. Within porcelaneous shale at very close to close spacing. Absent within sandstone. Unit is prominently anisotropic owing to plentiful parting.

Fracture: Siliceous shale has very close to close fracture spacing perpendicular to beds, but breaks in pieces as large as medium. Thick to very thick beds of siliceous shale are fractured at moderate to 4-ft spacing, shattered internally. In places, parallel cross fractures penetrate both siliceous shale and repetitive interbeds. Mudstone and shale have close to very close spacing of weathering fracture on close to wide major cross fractures. Hard sandstone has mostly moderate to wide spacing, some as much as 4 ft; firm sandstone has close to moderate spacing where fresh and close spacing of weathering fracture. Some concretions are internally fractured at close to wide spacing.

Permeability: Siliceous shale (most of unit) has very low intergranular permeability and low to moderate fracture permeability parallel to bedding in shallow bedrock; where highly fractured, provides moderate to possibly high fracture permeability (Page, 1950). Intergranular permeabililty of firm shale very low, of sandstone (minor to some of unit) low to very low. Most mantle moderate.

Weathering: In prominently bedded rock, weathering softens firm shale and opens fractures in siliceous shale, in places producing firm rock mass to depths of 15-30 ft or more; Radbruch (1969) reported weathering depth greater than 20 ft. Firm sandstone is weathered soft to firm to depth of about 25 ft. Weathering opens parting in porcelaneous shale.

Surficial mantle: Largely granular (silty). Noncohesive dark silty soil, containing abundant small and very small fragments of hard, siliceous rock, is typical. Radbruch (1969) reported that soil ranges from 2 in. to 3 ft in thickness.

Expansivity: Almost all bedrock is unexpansive, minor to some possibly expansive (shale, mudstone, and altered diabase dikes). Most to almost all mantle significantly expansive to unexpansive. Samples: OE14, typical uncracked noncohesive dark silty soil, free swell 61 percent; OE28, typical very mildly cracked dark silty soil, free swell 69 percent.

Stratigraphic thickness: West of Moraga fault, 1,160 ft or more (Page, 1950) to 2,000 ft (J.R. Wagner, written commun., 1973); thinner elsewhere.

Sources: Case, 1963; Lawson, 1914; Lawson and Palache, 1902; Page, 1950; Radbruch, 1969; Radbruch and Case, 1967; Sheehan, 1956; J.R. Wagner, written commun., 1973; Wagner, 1978; five stations.

MAP UNIT 507

Geologic unit, (age), and location: Monterey Group, Claremont Shale (T), only in area northeast of Castro Valley in the East Bay Hills.

Summary: Largely porcelaneous shale, thinly interbedded with shale or parted, hard to firm pieces. Lesser chert, diatomaceous shale, and sandstone, but in places largely firm sandstone. Most to almost all bedrock unexpansive, most mantle unexpansive to significantly expansive.

Expression in aerial photographs: Where discernible, unit consists of light-toned band of resistant intermediate topography 100-200 ft in width, accompanied by dark-toned band as wide as 100 ft. Underlies knobs.

Composition: (1) Porcelaneous shale. (2) Chert. (3) Shale, nonsiliceous to subporcelaneous. (4) Sandstone, fine to medium grained, moderately to poorly sorted, largely dirty, low permeability. (5) Diatomaceous shale (Robinson, 1956).

Unit is largely porcelaneous shale, but contains minor to some chert beds, some shale interbeds, and at least in places some to most is sandstone (where mapped thickness is much greater than siliceous rock). Minor diatomaceous shale (Robinson, 1956).

Hardness: Where fresh and weathered, porcelaneous shale is hard to firm, chert is hard, and shale, sandstone, and diatomaceous shale are firm.

Bedding: Much of both (a) thin to medium beds of porcelaneous shale and chert distinctly interbedded with shale, and (b) laminated and parted porcelaneous shale that lacks abundant shale interbeds, but contains some chert beds. Chert is laminated internally. Sandstone mostly in very thick (as much as 15-ft or more) beds. Diatomaceous shale probably to thick.

Parting: Present in porcelaneous rock at very close to moderate spacing, largely very close to close, but may be more widely spaced in much where fresh. Largely absent in sandstone. Thus, largely present at very close to moderate spacing, but largely absent in some areas.

Fracture: Porcelaneous shale and chert have very close to moderate spacing, largely close, of fracture that crosses bedding; shale has close to very close spacing; sandstone varies from rock that has very close to moderate spacing of weathering fracture to moderate, some wide, original spacing that lacks weathering fracture.

Permeability: Intergranular permeability of porcelaneous shale very low to low, chert and shale very low, sandstone low; thus bedrock has entirely very low to low intergranular permeability. Most shallow bedrock has low to moderate fracture permeability. Most mantle moderate.

Weathering: Parting, which may develop only where weathered, is present in porcelaneous rock to depths greater than 15 ft.

Surficial mantle: Largely granular.

Expansivity: Probably most to almost all bedrock is unexpansive. Most mantle unexpansive to significantly expansive. See samples for unit 506.

Stratigraphic thickness: 350 ft (Hall, 1958); 225 ft, including fine sandstone (Newton, 1948); 150-300 ft (Robinson, 1956).

Sources: Hall, 1958; Newton, 1948; Robinson, 1956; four stations.

MAP UNIT 508

Geologic unit, (age), and location: Monterey Group, Claremont Shale (T), only between Niles Canyon and Calaveras Reservoir, east of Fremont.

Summary: Largely hard chert and porcelaneous shale repetitively interbedded with firm shale and mudstone; includes some firm and hard sandstone, shale, and mudstone. Some bedrock and most mantle is severely expansive.

Expression in aerial photographs: Largely intermediate topography, ribbed in places, banded by resistant light-toned zones (siliceous shale), some of which form sharp crests, most of which form rounded crests on prominent hogbacks. These light-toned bands range from 100 to 400 ft in width and constitute as much as two-thirds of unit; bands 10 ft or more in width are distinguishable in places. In places, includes swale-forming nonresistant zones as wide as 200 ft or more. Minor outcrop.

Composition: (1) Thinly interbedded rock, largely chert and porcelaneous shale interbedded with shale and mudstone; most interbedded shale and mudstone is subporcelaneous, pink, and quite firm. Some thinly interbedded rock is hard cemented sandstone interbedded with firm shale and mudstone. (2) Silty carbonate (dolomite?), hard, in irregular beds and

nodules. (3) Mudstone, subporcelaneous, pink. (4) Fissile shale. (5) Sandstone, largely fine to medium grained; some is cemented, some uncemented, some contains concretions.

Unit is largely the typical thinly interbedded siliceous rock of composition 1, but includes some each of compositions 3, 4, and 5. Composition 2 is minor and is common near base of unit (Hall, 1958). Composition 4 is more common in southern parts of outcrop area. Unmappable thickness of friable sandstone (composition 5) is present at base of unit.

Hardness: Chert and porcelaneous shale have hard pieces, both where fresh and weathered; interbedded mudstone and shale firm to quite firm. Mudstone is quite firm where fresh and weathered; shale firm where fresh, firm to soft where weathered; dolomite ringing hard, crops out; sandstone variable from hard cemented rock and concretions to firm uncemented rock, probably mostly firm.

Bedding: Most of unit (composition 1) is distinctly and repetitively bedded by thin to medium beds of chert, porcelaneous shale, and some sandstone between very thin to medium beds of firm mudstone and shale. Dolomite beds and nodules to thick, some as much as 4 ft. Mudstone, unbedded, occurs in very thick (as much as 20-ft) intervals and as interbeds to thick. Shale laminated. Sandstone in thin to 4-ft beds.

Parting: Present in most of unit (composition 1) at very close to moderate spacing; in shale at very close (paper thin); absent in mudstone; mostly absent within sandstone, but present on contacts between sandstone and shale at close to very wide. Thus, good parting at close spacing in great majority of unit.

Fracture: Chert and porcelaneous shale have very close to moderate spacing, mostly close; interbedded mudstone and shale close to very close; dolomite largely wide to 4 ft; mudstone has close to wide spacing of original fracture and close to very close spacing of weathering fracture; shale probably close to very close spacing of weathering fracture; sandstone has close to moderate spacing, but concretions are medium to large, and some sandstone weathers spheroidally.

Permeability: All compositions have very low intergranular permeability except firm sandstone (some of unit), which has low intergranular permeability. Chert and porcelaneous shale, which make up most of unit, have low to moderate fracture permeability in shallow bedrock. Some to most mantle low, much to most very low.

Weathering: Thinly bedded rock is little affected by weathering except for opening of fractures, probably to depth of 20 ft (see unit 506). Dolomite crops out. Mudstone has weathering fracture to depths greater than 15 ft.

Surficial mantle: Largely clayey. Most exposures have a mildly cracked silty clay soil, such as sample NL8, over chert and porcelanite. Moderately cracked weathered clayey rock, such as sample NL13A, occurs in about half of clayey rock (compositions 3, 4), but most surficial mantle over clayey rock is less expansive. Minor well-cracked weathered clayey rock, such as sample NL13B.

Expansivity: Most bedrock unexpansive, some severely expansive (clayey rock). Much to most mantle severely expansive. Samples: NL8, mildly cracked silty clay soil, typical, free swell 111 percent; NL13A, weathered clayey rock, free swell 140 percent; NL13B, well-cracked weathered clayey rock, minor, free swell 100 percent (exaggerated).

Stratigraphic thickness: About 700 ft (Hall, 1958).

Sources: Hall, 1958; two stations.

MAP UNIT 509

Geologic unit, (age), and location: Shale and sandstone (T), in Santa Cruz Mountains between Chittenden and Mount Madonna.

Summary: Largely subporcelaneous to porcelaneous shale and mudstone; lesser interbedded sandstone, most of which is silica cemented, and siliceous siltstone. Some zones of rhythmically bedded chert and porcelanite, and rhythmic sandstone flysch. Good parting in entire unit. Some significantly expansive clayey subsoil.

Expression in aerial photographs: Largely intermediate topography, some very regularly ribbed, some irregular. Minor hard topography includes gravel pits and steep white upper slopes near Atherton Peak. Tonal banding in some places.

Composition: (1) Subporcelaneous to porcelaneous shale and mudstone, largely effectively a shale although much is not truly fissile. Includes gradations between hard rock and firm, carbonaceous (McLaughlin and others, 1971), barely siliceous rock. Some is prominently foraminiferal. (2) Porcelaneous siltstone (hard). (3) Chert and porcelanite, rhythmically interbedded with somewhat siliceous firm shale. (4) Sandstone, medium grained, some coarse grained, moderately well to moderately poorly sorted, much silica cemented, some uncemented. (5) Flysch of firm sandstone, as in composition 4, thinly interbedded with firm shale. (6) Calcareous beds, minor, form prominent outcrops (Jones, 1911).

Unit is largely composition 1, of which most is hard to quite firm where fresh; some interbeds of siltstone (composition 2). Includes some zones of rhythmically bedded chert and porcelanite (composition 3) that are tens of feet to as thick as 100 ft or more. Sandstone (composition 4) is a widespread constituent in minor to some amounts; much is silica cemented and hard, some firm, and firm in flysch (composition 5) that constitutes some of unit. Minor calcareous beds.

Hardness: Composition 1 is largely hard to quite firm where fresh, some firm where fresh, much hard to quite firm where weathered, the remainder firm where weathered. Siltstone is hard and brittle; chert and porcelanite hard where fresh and weathered; sandstone hard where cemented, firm where not cemented; calcareous beds hard.

Bedding: Composition 1 occurs largely as thick and very thick beds, possibly laminated, between lesser distinct thin to medium beds of laminated siltstone (composition 2) and distinct beds and blebs of sandstone that are largely medium to thick or 4 ft, but as thick as 15 ft. Chert and porcelanite, much laminated, occur as distinct thin to medium beds between very thin to medium shale; this rhythmically interbedded rock occurs in intervals tens of feet to more than 100 ft in thickness. Flysch consists of sandstone in thin to medium beds repetitively interbedded with thin to medium firm shale. Outcropping calcareous beds are thick (Jones, 1911).

Parting: Present in composition 1 at very close to moderate spacing, the shale fissile, mudstone not fissile. Present on distinct bedding contacts and in rhythmically bedded chert and porcelanite at close to moderate spacing. Thus, present in almost entire unit at very close to moderate spacing, exceptions being thick to very thick sandstone and minor chert blebs.

Fracture: Composition 1 has close to very close spacing of weathering fracture on moderate to wide original spacing. Chert and porcelanite have very close to moderate spacing; siltstone close to moderate; cemented sandstone close to 4 ft, most moderate to wide; firm sandstone moderate, some wide; calcareous beds probably wide to 5 ft.

Permeability: Intergranular permeability very low to low in compositions 1 and 2, very low in chert and porcelanite, low in firm sandstone, very low in cemented sandstone; thus, entirely very low to low intergranular permeability in bedrock. Most shallow bedrock has low fracture permeability, some moderate. Most mantle moderate, some low to very low.

Weathering: Hard to quite firm rock of composition 1 retains hardness to within 5 ft of ground surface.

Surficial mantle: Largely granular (silty), some clayey subsoil. Surficial soil is uncracked and silty, some stony, over entire unit. Some clayey subsoil accompanies cut-slope failures.

Expansivity: Almost all bedrock unexpansive. Mantle largely unexpansive, some significantly expansive (clayey subsoil). Sample WE10, moderately cracked clay subsoil, free swell 79 percent, is local constituent that may be anomalously expansive (near San Andreas fault).

Sources: Allen, 1946; Jones, 1911; McLaughlin and others, 1971; 10 stations.

MAP UNIT 510

Geologic unit, (age), and location: Pinehurst Shale (T), in the East Bay Hills west of Upper San Leandro Reservoir.

Summary: Not seen in field. Reported to be interbedded siliceous shale and hard sandstone, pieces hard where fresh and weathered. Locally moderate fracture permeability. Bedrock and mantle probably largely unexpansive.

Composition: Reported to be largely siliceous shale, regularly interbedded with some hard, fine-grained sandstone. Some sandstone dikes.

Hardness: Pieces hard where fresh and weathered.

Bedding: Distinct and regular. Each composition is reported to occur in sequences that are mostly medium to thick, but as much as 10 ft; beds in each are largely thin to medium. Sandstone dikes to thick.

Parting: Present on bedding planes at close to moderate spacing, and within siliceous shale at very close spacing. Abundant, prominent (as judged from photograph in Case, 1968).

Fracture: Probably close to moderate spacing in sandstone, close to very close spacing in siliceous shale. Possibly local wide spacing in sandstone dikes.

Permeability: Bedrock probably has very low intergranular permeability, low to moderate fracture permeability in shallow rock. Mantle probably moderate to low.

Weathering: To depths of more than 20 ft (Radbruch, 1969). Little effect other than opening of fractures and parting.

Surficial mantle: Probably granular to clayey. Sparse, stony, according to Radbruch (1969).

Expansivity: Bedrock probably largely unexpansive. Mantle probably unexpansive to significantly expansive. No mention of expansivity by Radbruch (1969).

Stratigraphic thickness: 500-700 ft maximum (Radbruch, 1969).

Sources: Case, 1968; Radbruch, 1969.

MAP UNIT 511 Franciscan chert

Geologic units, (age), and location: Chert of the Franciscan assemblage (KJ), throughout region; metachert of the Franciscan assemblage (KJ), in Marin highlands.

Summary: Rhythmically interbedded chert and lesser shale, locally hydrothermally altered to clay. Chert is hard and brittle, shale largely firm. Very low intergranular permeability, low to moderate fracture permeability in shallow rock. Bedrock and surficial mantle largely unexpansive.

Composition: Chert and subordinate ferruginous shale, in places containing blueschist minerals. Locally hydrothermally altered to clay.

Hardness: Chert is hard and brittle, shale largely firm, where fresh and weathered; clay is soft.

Bedding: Chert beds are distinct and commonly thin to medium (less than 4 in.), but range from very thin to very thick, especially near contacts with other rocks. Shale beds are very thin to thin, locally medium, and are rhythmically interbedded with chert.

Parting: Prominent along bedding planes, commonly close to 4-in. spacing; within shale at very close spacing.

Fracture: Largely close spacing, ranging from very close to moderate; spacing as wide as 6 ft in thick to very thick beds.

Permeability: Bedrock has very low intergranular permeability, low to moderate fracture permeability in shallow rock. Almost all mantle moderate, rarely low to very low.

Surficial mantle: Almost all granular, much stony; rarely clayey.

Expansivity: Bedrock largely unexpansive, rare hydrothermal clay expansive. Surficial mantle largely unexpansive, some significantly expansive, rare clayey mantle expansive. Bedrock samples: PB2B, altered chert, free swell 49 percent; SM11, altered chert, free swell 108 percent. Surficial mantle samples: PB1, colluvium from chert, free swell 71 percent; SM12, red soil on chert, free swell 70 percent; SG14, soil on chert block in melange, free swell 59 percent.

Stratigraphic thickness: Lenticular bodies as much as 250 ft thick.

Sources: Bailey and others, 1964; Ellen and others, 1972; many stations.

MAP UNIT 519

Geologic unit, (age), and location: Diatomite with interbedded sand, gravel, and tuff (T), near Napa.

Summary: Clastic sedimentary materials in unknown proportions, including tuffaceous sandstone, diatomite, and diatomaceous fine-grained materials. Descriptions of composition and physical properties below apply largely to the several materials present in the exposures observed; descriptions of permeability, surficial mantle, and expansivity incorporate estimates for other materials, described elsewhere, that probably constitute part of unit.

Composition: Proportions uncertain. Contains water-laid tuffaceous sandstone; tuff and tuff breccia; diatomite and diatomaceous materials; and probably sandstone, conglomerate, and clayey rock, derived largely from volcanic terrain, that are similar to materials described for unit 141. See units 141 and 237 for description of composition and physical properties of probable components that we did not observe in this unit.

In the major exposure examined, rock is largely tuffaceous sandstone, about 10-20 percent diatomite and diatomaceous materials, and minor tuff breccia; composition and physical properties of these materials are described below. Tuffaceous sandstone occurs both as poorly sorted, predominatly fine-grained sandstone containing pumice pebbles and as well-sorted, fine- to coarse-grained sandstone, much of which has minor clay coatings on grains. Tuff breccia consists of hard and firm volcanic blocks as much as 2 ft in diameter in fine-grained matrix. Diatomite, diatomaceous siltstone, and diatomaceous ash are silt size or finer.

Hardness: Tuffaceous sandstone is firm approaching soft; tuff breccia consists of hard and firm blocks in firm approaching soft matrix; diatomite and diatomaceous materials are firm and brittle.

Bedding: Tuffaceous sandstone occurs in very thick (20-ft and more) unbedded intervals between thin to medium beds of coarse-grained pumice-rich material or fine-grained diatomaceous material. Tuff breccia is unbedded. Diatomite and diatomaceous materials occur in distinct and strikingly regular thin to medium beds, some laminated, between medium to thick beds of tuffaceous sandstone. Diatomite beds thicken (to very thick?) in areas where quarried. Layering is distinct on aerial photographs.

Parting: At bedding planes in diatomite and diatomaceous materials (at close to wide spacing), and at some bedding planes between very thick beds of tuffaceous sandstone.

Fracture: Indistinct in tuffaceous sandstone, probably moderate spacing; close spacing in diatomite and diatomaceous materials.

Permeability: Intergranular permeability low to moderate, some high, in tuffaceous sandstone; low to very low in tuff breccia; low to very low in diatomaceous materials. Probably most bedrock of unit as a whole has low to very low intergranular permeability, but some moderate and high horizons; probably some low fracture permeability in shallow bedrock. Probably most mantle low to very low.

Weathering: Similar to unit 141.

Surficial mantle: Probably largely clayey.

Expansivity: Probably much to most bedrock and mantle of unit as a whole are significantly expansive, probably some bedrock and mantle are severely expansive. Bedrock samples: MG14A, bedrock, free swell 54 percent; MG15B, bedrock, free swell 61 percent. Surficial mantle samples: MG13, organic soil, slightly cracked, free swell 57 percent; MG14B, soil, free swell 60 percent; MG15A, soil, free swell 63 percent. See also samples for unit 237.

Sources: K.F. Fox, oral commun., 1972-73; Fox and others, 1973; two stations.

MAP UNIT 520

Geologic unit, (age), and location: Briones Sandstone, limestone in E member of Wagner (1978) (T), near Sunol Valley, east of Fremont.

Summary: Not seen in field. Only information is brief description by Hall (1958) of "calcite" deposits, "white caliche commonly containing siliceous inclusions." About 200 ft thick (Hall, 1958). Unknown permeability, surficial mantle texture, and expansivity.

Expression in aerial photographs: Very soft, swale-forming topography; dark-toned surficial mantle appears thick, gullied in places. Topography contains numerous bowls that are smooth and apparently filled with surficial mantle. Probably little bedrock exposure.

Source: Hall, 1958.

MAP UNIT 521

Geologic unit, (age), and location: Briones Sandstone, Hercules Shale Member (T), in northern part of the East Bay Hills.

Summary: Mostly mudstone and firm subporcelaneous mudstone, some siltstone and very fine grained clayey sandstone in places, but porcelaneous shale reported in other places. Some or more bedrock and much to most mantle are severely expansive.

Expression in aerial photographs: Nonresistant unit, intermediate to generally soft topography. Contains a few distinct resistant light-toned bands in places, mostly as wide as 20 ft, but one band, probably clayey sandstone or porcelaneous rock, is as wide as 100 ft.

Composition: In exposures observed, unit is largely mudstone and firm subporcelaneous mudstone of pinkish cast, some sandy, and some siltstone and very fine grained clayey sandstone. In other places, reported to be porcelaneous shale (Sheehan, 1956) or bituminous shale (Trask, 1922; Lawson, 1914). Radbruch and Case (1967) reported that unit is dominantly siliceous, as did Weaver and others (1944) and J.R. Wagner (written commun., 1973).

Hardness: Mudstone and subporcelaneous mudstone have firm pieces where weathered, probably firm where fresh. Porcelaneous shale probably has hard pieces.

Bedding: Absent to indistinct in outcrop. Light-toned resistant bands on photographs are probably very thick beds of clayey very fine grained sandstone or porcelaneous rock within dominant mudstone. Some indistinct thick bedding in mudstone (Sheehan, 1956). J.R. Wagner (written commun., 1973) reported many sandy interbeds.

Parting: Crude parallel parting at close spacing in mudstone, probably ranging from very close to moderate. Some pieces break along parting, some as small spheroids. Absent in siltstone and very fine grained clayey sandstone. Probably close to very close spacing in siliceous shale.

Fracture: Close to moderate original spacing, iron stained; close to very close spacing of weathering fracture produces chips. Unknown in siliceous shale, probably very close to moderate.

Permeability: Intergranular permeability of bedrock largely very low, minor to some low (in sandstone). Much shallow bedrock has low fracture permeability. Probably most mantle very low, some to much low to moderate.

Weathering: To depths greater than 10 ft. Weathering fracture produces small to very small chips. Much of unit has abundant free clay and poor cut-slope stability.

Surficial mantle: Probably most clayey, some to much granular (silty). Includes both cracked silty clay soil, such as sample MI21A, and noncohesive uncracked soil, such as sample MI8.

Expansivity: Much bedrock unexpansive; much is expansive, including some or more that is severely expansive. Much to most mantle severely expansive, some to much significantly expansive. Samples: MI21A, moderately cracked silty clay soil, free swell 120 percent; MI8, uncracked to very mildly cracked silty(?) soil, free swell 70 percent.

Stratigraphic thickness: 550 ft (Weaver, 1944).

Sources: Lawson, 1914; Radbruch, 1969; Radbruch and Case, 1967; Sheehan, 1956; Trask, 1922; J.R. Wagner, written commun., 1973; Wagner, 1978; Weaver, 1944; four stations.

MAP UNIT 522

Geologic unit, (age), and location: Monterey Group (T) (called Monterey Shale on source map), only on Point Reyes peninsula.

Summary: Almost all is variably siliceous fine-grained rock, ranging from rock that lacks noticeable hardening to hard chert. Most bedrock and mantle are unexpansive.

Composition: Almost all is variably siliceous fine-grained rock, largely mudstone, silty mudstone, and diatomaceous rock. Variable siliceousness of these materials has resulted in a range of properties, from rock that lacks noticeable hardening through porcelaneous rock to chert. Near Bolinas, consists of nonsiliceous mudstone, largely unbedded, that includes hard calcareous concretions as much as 3 ft in length. Between Bear Valley and Sir Francis Drake Highway, exposures show hard porcelanite and chert layers regularly and distinctly interbedded with firm to soft nonsiliceous interlayers. North of Sir Francis Drake Highway, exposures show some of the typical interbedded siliceous and nonsiliceous rock, but also firm mudstone in very thick beds between hard, medium to thick siltstone interbeds. Unit includes minor to some low-density diatomaceous rock.

Hardness: Variable, from mostly firm containing less abundant hard layers to, more commonly, predominantly hard, brittle siliceous layers between firm to soft interlayers. Calcareous concretions in unbedded firm mudstone are hard.

Bedding: Variable, from absent to distinct, regular, and prominent. Near Bolinas, bedding is absent in intervals hundreds of feet thick, except where very thick (3- to 20-ft) beds of harder rock form reefs on the wave-cut bench; here fracture is generally the only observable structural feature. From Bear Valley to Sir Francis Drake Highway, bedding is distinct and prominent, consisting of mostly thin to medium, some thick, beds of hard siliceous rock between thin to very thin interbeds of soft to firm silty shale. Siliceous beds are in many places laminated. North of Sir Francis Drake Highway, the prominently bedded siliceous rock occurs, but also present are thick to very thick (5-ft or more) beds of firm mudstone interbedded with distinct medium to thick (as much as 2-ft) beds of hard siltstone.

Parting: Absent in unbedded rock near Bolinas, present in bedded rock as follows: At very close spacing within silty shale interbeds; at contacts of siliceous beds with interbeds (close to moderate spacing); in places at close spacing within siliceous beds; and at close to very close spacing within very thick mudstone beds north of Sir Francis Drake Highway. In summary, good parting at moderate or closer spacing except near Bolinas.

Fracture: In rock that is unbedded or very thickly bedded, original spacing is mostly moderate, in places wide, becoming close to very close where weathered. In prominently bedded rock, hard siliceous layers have mostly close spacing, ranging from very close to moderate, about perpendicular to bedding; interbeds have very close to moderate spacing. Fractures across hard beds generally do not penetrate adjacent interbeds. In many places, siliceous rock is brecciated.

Permeability: Almost all bedrock has very low to possibly low intergranular permeability. Most shallow bedrock has low fracture permeability, probably some moderate. Much to most mantle moderate, some to much low.

Weathering: Hard siliceous rock remains hard to the ground surface. Most firm rock weathers from fractures inward.

Surficial mantle: Much to most granular, some to much clayey. Over siliceous rock, soil is silty and contains rock fragments, thin on hilltops, such as sample DB1B.

Expansivity: Most bedrock unexpansive, possibly some significantly expansive, rarely severely expansive. Most mantle unexpansive, probably

some significantly expansive. Samples: DB1A, claystone, rare constituent, free swell 116 percent; DB1B, typical silty soil, free swell 46 percent; DB30, soil, free swell 70 percent; DB33, soil, free swell 42 percent.

Stratigraphic thickness: About 5,200 ft.

Sources: Anderson, 1899; J.A. Bartow, written commun., 1972; Blake and others, 1974; Galloway, 1977; Gluskoter, 1962; Osmont, 1905; Wahrhaftig, 1970; Weaver, 1949; seven stations.

MAP UNIT 523

Geologic unit, (age), and location: Monterey Group (T), only in Diablo Range between Calaveras Reservoir and Anderson Reservoir.

Summary: From 30 to 80 percent rhythmically bedded chert and shale; remainder consists largely of firm sandstone and mudstone, but in places consists largely of hard calcite-cemented sandstone that produces very large blocks. Much mantle is severely expansive.

Expression in aerial photographs: Largely intermediate topography. About half of mapped extent of unit includes an intermediate to hard, prominent, narrow, light-toned ridgecrest. Some to most of unit in other places is subdued intermediate to locally soft topography that includes occasional resistant knobs. Thus, resistant siliceous rock seems to come and go, but is present as a resistant crest in about half of mapped unit.

Composition: (1) Chert grading to porcelanite, largely chert, rhythmically interbedded with firm shale; includes minor hard nodules and irregular beds of limestone and (or) dolomite. (2) Sandstone, very fine to medium grained, lesser coarse grained, undersaturated to saturated by clay; contains calcite-cemented concretions and minor mudstone and shale. (3) Silty and sandy mudstone, some porcelaneous, grading to siltstone and to clay-saturated very fine grained sandstone; includes occasional beds of punky weathered limestone(?). (4) Sandstone, medium grained, much calcite cemented, and sheared sandstone and lesser shale.

Proportions are variable, from 30 to 80 percent composition 1, the remainder largely compositions 2 and 3; unit probably averages about half composition 1. Composition 4 locally constitutes two-thirds of unit (one-third cemented sandstone, one-third sheared rock). Composition 2 is generally present at base in minor amount (a few feet according to Crittenden, 1951).

Hardness: Chert and porcelanite are hard where fresh and weathered; interbedded shale firm where fresh and weathered. Limestone nodules remain very hard into weathered zone and many crop out. Clayey sandstone firm where weathered, firm to possibly quite firm where fresh. Mudstone firm where fresh and weathered, but porcelaneous mudstone quite firm where weathered. Cemented sandstone hard, as are concretions.

Bedding: Chert and interbedded shale are distinctly and repetitively bedded, the chert laminated within very thin to medium, mostly thin, beds between firm shale in thin to mostly very thin beds. In places (Alum Rock Park), zones of chert as thick as 100 ft are laminated but unparted in thick to 5-ft beds. Limestone nodules and beds to thick (3 ft). Sandstone and mudstone are very thick bedded, some probably internally indistinctly bedded, but sandstone called massive (Crittenden, 1951). Cemented sandstone in very thick (as much as 10-ft or more) beds.

Parting: Present in bedded chert at very close to moderate spacing along bedding contacts and within interbedded firm shale. Local zones of chert have spacing at wide to very wide (5 ft). Parting absent in sandstone and mudstone.

Fracture: Chert and interbedded shale are fractured at very close to moderate spacing, mostly close, but very thick chert is fractured at wide to 10 ft or more. Clayey sandstone has close to very close spacing of weathering fracture. Mudstone, siltstone, and clayey fine sandstone (composition 3) have very close to moderate spacing of weathering fracture on moderate to wide original spacing. Cemented sandstone has moderate to very wide (5-ft) fracture spacing, but produces blocks as large as 10 ft in diameter; much has moderate spacing of weathering fracture superimposed. Limestone nodules have wide to 6-ft spacing.

Permeability: Chert and interbedded shale have very low intergranular permeability, low to moderate fracture permeability in shallow rock; called "permeable middle member of Monterey Formation," but of little importance as aquifer, although hosts thermal and mineral springs in Alum Rock Park (Crittenden, 1951). Intergranular permeability of sandstone mostly low, very low where cemented; mudstone, siltstone, and clay-saturated fine sandstone very low to low. Thus, much to most bedrock has very low intergranular permeability and low to moderate fracture permeability in shallow bedrock. Some to much bedrock has low intergranular permeability. Most mantle very low, some to much moderate.

Weathering: Some clayey sandstone fresh at depth of 6 ft. Chert hard to ground surface.

Surficial mantle: Largely clayey, some to much granular. Stony sand, silt, and clay soils, such as samples CVR7, CVR24A, and CVR24B (local subsoil), overlie bedded chert and shale. Granular soil, such as sample CVR22, overlies sandstone. Sandy and silty clay soils, such as samples CVR23 and LO4B, and local clay subsoil, such as sample LO4A, overlie mudstone. Two traverses of good soil observations. At sample localities LO2-LO4, three-eighths is uncracked to very mildly cracked granular soil; one-half mildly cracked, fluffy clay soil, such as sample LO4B; and one-eighth moderately cracked clay subsoil, such as sample LO4A. At sample localities CVR22-CVR24, one-third is similar to sample CVR22, one-third similar to sample CVR23, and one-third similar to sample CVR24A; also local subsoil like sample CVR24B.

Expansivity: Probably most bedrock unexpansive, probably some expansive (mudstone). Much mantle severely expansive, much significantly expansive, possibly some unexpansive. All samples are of surficial mantle. Samples over bedded chert and shale: CVR7, light-brown sandy silty soil, typical, free swell 54 percent; CVR24A, uncracked stony clay soil, typical, free swell 93 percent (exaggerated); CVR24B, mildly cracked stony clay subsoil, free swell 120 percent. Over sandstone, sample CVR22, sandy silty soil, free swell 65 percent. Samples over mudstone: CVR23, typical sandy and silty clay soil, free swell 125 percent; LO4B, mildly cracked clay soil, free swell 91 percent; LO4A, moderately cracked clay subsoil, free swell 110 percent. Also sample CVR15, mildly cracked clayey soil, free swell 120 percent.

Stratigraphic thickness: From a thin skin to more than 900 ft (Crittenden, 1951).

Sources: Crittenden, 1951; Davis and Jennings, 1954; Templeton, 1912; 12 stations.

MAP UNIT 524

Geologic unit, (age), and location: Monterey Group (T), only in Diablo Range east of Anderson Reservoir.

Summary: About one-third clay-saturated firm sandstone, one-third hard rhythmically bedded porcelaneous shale, and one-third firm to quite firm mudstone and porcelaneous mudstone. Largely uncracked stony silty mantle, unexpansive to significantly expansive.

Expression in aerial photographs: Mostly hard ribbed topography that has slightly rounded crests. Banded by 10- to 30-ft zones in a few places. Resistance similar to units 641 and 321.

Composition: (1) Sandstone, medium to fine grained, clay saturated, having weathering fracture. (2) Porcelaneous shale, laminated, repetitively bedded between firm fissile shale. (3) Firm mudstone and lesser quite firm porcelaneous mudstone, much sandy. Also present in lesser amounts are grit, clay saturated to cemented; firm shale that shows mild expansivity cracks where weathered; hard calcite-cemented sandstone and concretions; and calcareous shale and abundant lenses of impure limestone reported by Gilbert (1943). Going up section from base, unit is about one-third clayey sandstone, one-third porcelaneous shale, and one-third mudstone and porcelaneous mudstone. Other compositions minor.

Hardness: Sandstone is firm where fresh, firm and some soft where weathered; calcite-cemented sandstone, concretions, and some grit hard where

fresh and in weathered zone; porcelaneous shale hard where fresh and weathered, interbedded fissile shale firm; most mudstone firm where fresh and weathered, but some to much is porcelaneous mudstone that is quite firm to hard where fresh and weathered. Shale firm where fresh, firm to soft where weathered.

Bedding: Sandstone is unbedded except for calcite-cemented beds as thick as 4 ft; porcelaneous shale is distinctly and repetitively bedded in thin to thick beds of laminated hard porcelaneous shale between very thin to thin firm fissile shale; mudstone is unbedded to possibly indistinctly bedded, but includes some distinct interbedding of sandstone in very thick (tens of feet) beds. Hard grit in thick bed; concretions to large; firm shale thick.

Parting: Absent in sandstone. Present in porcelaneous shale at very close to wide spacing along bedding contacts, in some medium and thick beds at very close spacing, and within firm interbeds at very close spacing. Absent in mudstone.

Fracture: Sandstone has close to very close spacing of weathering fracture on close to wide original spacing; calcite-cemented sandstone has moderate to wide spacing; porcelaneous shale has close to moderate spacing; mudstone has close to very close spacing of weathering fracture on moderate(?) original spacing. Hard grit has wide spacing; concretions to wide.

Permeability: Intergranular permeability of sandstone low, mudstone very low, porcelaneous shale very low; thus, most bedrock very low, some low. Low to possibly moderate fracture permeability in most shallow bedrock. Most mantle moderate, probably some to much low to very low.

Weathering: All weathered to depths greater than 10 ft.

Surficial mantle: Largely granular, probably some to much clayey. Largely uncracked stony silty soils.

Expansivity: Probably most bedrock unexpansive, probably some significantly expansive (mudstone). Most mantle unexpansive to significantly expansive. See samples for unit 523.

Stratigraphic thickness: Less than 1,000 ft; this unit plus unit 321 total about 1,000 ft (Gilbert, 1943).

Sources: Gilbert, 1943; one station.

MAP UNIT 525

Geologic unit, (age), and location: Monterey Group (T), only in Gilroy-Sveadal area of Santa Clara Valley and Santa Cruz Mountains.

Summary: Probably about half mudstone, some firm sandstone, some hard to quite firm tuffaceous sandstone and siltstone, some porcelaneous shale, and minor dolomite and conglomerate. Some subsoil is severely expansive, some to possibly half of mantle is significantly expansive.

Expression in aerial photographs: Largely resistant intermediate topography, coarsely ribbed, local hard crests, fairly light tone overall. Much is banded; bands are mostly 10-50 ft in width, but some dark-toned zones approach 100 ft in width and one white crest is about 100 ft in width. Near Sveadal, forms prominent hard ridge.

Composition: (1) Mudstone, some subporcelaneous, possibly much diatomaceous (E.E. Brabb, written commun., 1972). (2) Tuffaceous sandstone, fine grained, grading to siltstone. (3) Porcelaneous shale and siltstone containing minor sand grains. (4) Sandstone, fine to medium grained, moderately to moderately well sorted, low permeabililty; some has weathering fracture, minor is calcite cemented. (5) Dolomite. (6) Bentonitic shale and pebble conglomerate (E.E. Brabb, written commun., 1972).

Unit is probably about half mudstone (composition 1), some to much of which is subporcelaneous. Remainder of unit consists of some tuffaceous sandstone and siltstone (composition 2), some sandstone (composition 4), and some porcelaneous rock (composition 3). Compositions 5 and 6 are minor, not observed.

Hardness: Mudstone is firm where fresh and weathered. Tuffaceous sandstone and siltstone are hard to quite firm where fresh, firm to hard where weathered. Sandstone (composition 4) is firm, some soft, where weathered. Porcelaneous shale quite firm, as is subporcelaneous mudstone. Dolomite and cemented rock hard.

Bedding: Not observed but certainly present, probably largely as distinct thick to very thick (tens of feet) beds of compositions 2, 3, and 4 in mudstone. Some mudstone and tuffaceous siltstone is laminated; dolomite in beds to thick, internally laminated; calcite-cemented sandstone to thick.

Parting: Spacing in mudstone is largely very close to moderate, some wide. Much to most tuffaceous sandstone has spacing at close to moderate, but some is poor and irregular. Tuffaceous siltstone has prominent platy parting at close to very close spacing. Sandstone unparted. Porcelaneous shale has close to moderate spacing, dolomite moderate. Thus, spacing largely at very close to moderate, some to very wide, and most of the resistant materials are parted.

Fracture: Mudstone has very close to moderate spacing of weathering fracture. Tuffaceous sandstone has original moderate to wide spacing, and some to most develops very close to moderate spacing of weathering fracture; tuffaceous siltstone close to moderate. Porcelaneous shale has moderate fracture across bedding. Sandstone (composition 4) has close to moderate spacing and some has additional weathering fracture. Dolomite and cemented rock moderate to wide.

Permeability: Intergranular permeability of mudstone very low, tuffaceous sandstone and siltstone low, sandstone low, porcelaneous shale low to very low, dolomite very low. Thus, about half of bedrock has very low intergranular permeability, the remainder largely low. Much shallow bedrock has low to possibly moderate fracture permeability. Much mantle moderate, much low to very low.

Surficial mantle: Much granular, much clayey. Surficial soil is largely sandy or silty and uncracked to very mildly cracked. Includes some sandy clay subsoil, such as sample GL5, and some to possibly half silty clay surficial soil over mudstone, such as sample CTT16.

Expansivity: Most bedrock probably unexpansive, but much may be significantly expansive and minor (reported bentonitic shale) is probably severely expansive. Much mantle unexpansive to possibly significantly expansive, some to much significantly expansive, some severely expansive (subsoil). Samples: GL5, moderately cracked sandy clay subsoil, free swell 101 percent; CTT16, brown silty clay soil, free swell 69 percent.

Stratigraphic thickness: 1,300 ft (Bailey and Everhart, 1964).

Sources: Bailey and Everhart, 1964; E.E. Brabb, written commun., 1972; McLaughlin and others, 1971; five stations.

MAP UNIT 526

Geologic unit, (age), and location: Monterey Group (T), only in Santa Clara County near Los Altos.

Summary: Includes compositions like those in units 501 and 523-525; see descriptions of these units for likely composition and physical properties. Proportions uncertain, but some to most is porcelaneous shale and mudstone that is firm to hard and brittle. Some or more mantle is severely expansive.

Permeability: Probably most bedrock has very low to low intergranular permeability and much to most shallow bedrock has low to possibly moderate fracture permeability. Probably much mantle moderate, much low to very low.

Surficial mantle: Probably much granular (silty), much clayey.

Expansivity: Probably most bedrock unexpansive, minor to much expansive. Probably much mantle is unexpansive to significantly expansive, some or more is severely expansive. Samples: PA13, clay bedrock, free swell 61 percent; PA52, very mildly cracked silty clay soil, typical, free swell 68 percent; PA54, well-cracked dark clay soil on hilltop, free swell 88 percent; MH18, black silty clay soil, free swell 85 percent.

Sources: Dibblee, 1966; three stations.

MAP UNIT 527

Geologic unit, (age), and location: Monterey Group, undivided (T), only in areas near Las Trampas Ridge and San Pablo Reservoir in the East Bay Hills.

Summary: Briefly seen in field. Probably much to most is dirty sandstone, some to much of both siliceous shale and nonsiliceous shale. Probably much mantle severely expansive.

Composition: Includes sandstone, siliceous shale, and nonsiliceous shale, as described for Monterey Group units 333, 334, 364, 392, 506, 529, 530, and 534. Proportions are uncertain; probably much to most is dirty sandstone, some to much of both siliceous shale and nonsiliceous shale and mudstone. Possibly includes some diatomaceous rock as described for unit 535, especially near San Pablo Reservoir. Near Las Trampas Ridge, Ham (1952) reported largely siliceous shale and interbedded massive fine-grained graywacke, much of the siliceous shale brecciated, and lesser thinly bedded, friable, slightly tuffaceous and slightly glauconitic sandstone that contains lentils of sandy limestone.

Hardness: Sandstone mostly firm, some probably approaching soft, some hard and cemented. Siliceous shale pieces are hard to firm, nonsiliceous shale pieces firm to soft. Most limestone hard.

Bedding: Variable, from reported massive sandstone to siliceous shale that has thin to medium distinct beds.

Parting: Variable spacing; very close to moderate in shale, very wide or occasional in most sandstone. Ham's (1952) description suggests that much of siliceous shale near Las Trampas Ridge is brecciated, in which case much may lack parting.

Fracture: In sandstone, weathering fracture probably mostly present at very close to moderate spacing; probably original spacing close to wide. Shale fractured at very close to moderate spacing.

Permeability: Intergranular permeability probably low in sandstone, very low in shale; thus, probably much bedrock low, much very low. Low to moderate fracture permeability in some to much shallow rock (siliceous shale). Probably much mantle very low, some low, much moderate.

Weathering: Unknown. Probably most sandstone weathered to depths of more than 20 ft, siliceous shale to depths greater than 25 ft.

Surficial mantle: Probably much to most clayey, much granular.

Expansivity: Probably most bedrock unexpansive, much may be expansive. Probably much mantle severely expansive, much significantly expansive, some unexpansive. Some moderately cracked mantle noted near San Pablo Reservoir.

Stratigraphic thickness: About 1,600 ft near Las Trampas Ridge (Ham, 1952).

Sources: Ham, 1952; one station.

MAP UNIT 528

Geologic unit, (age), and location: Monterey Group, undivided (T), only in the East Bay Hills between Dublin and Upper San Leandro Reservoir.

Summary: Includes about equally abundant firm sandstone and nonsiliceous to subporcelaneous shale; some chert and porcelaneous shale. Much to most mantle significantly expansive.

Expression in aerial photographs: Intermediate topography that lacks ribs. Distinct to subtle light-toned resistant bands 5-50 ft in width occur in zones 100-300 ft in width between dark-toned zones as wide as about 200 ft. Light and dark tones are about equally abundant.

Composition: (1) Shale, nonsiliceous to subporcelaneous. (2) Sandstone, fine to medium grained; most contains silt and clay matrix sufficient for weathering fracture and low permeability, but some moderately sorted sandstone lacks weathering fracture. (3) Siltstone. (4) Porcelaneous shale and chert. (5) Cemented sandstone. Unit includes much of both shale and sandstone, about equally abundant; some chert and porcelaneous shale, minor siltstone and cemented sandstone.

Hardness: Shale and siltstone are firm where fresh and weathered. Sandstone firm to quite firm where fresh and weathered (some soft where well weathered). Porcelaneous shale hard to firm, much brittle. Cemented sandstone hard.

Bedding: Sandstone both in distinct to indistinct thin to thick beds between siltstone and shale, and in very thick beds (as much as 15 ft or more). Shale largely very thick. Porcelaneous shale has much of both distinct thin to medium beds and very thick beds that are internally parted. Cemented sandstone to thick, some possibly very thick.

Parting: Present in shale and porcelaneous shale at very close to moderate spacing; in much sandstone at close to moderate, much very wide. Thus, spacing largely very close to moderate, some very wide.

Fracture: Shale, porcelaneous shale, and siltstone have very close to moderate spacing of weathering fracture. Sandstone has moderate, some wide, original spacing, and most has very close to moderate spacing of weathering fracture superimposed, some spheroidal. Cemented sandstone has moderate to wide spacing.

Permeability: Intergranular permeability of shale, porcelaneous shale, and cemented sandstone very low, siltstone and most sandstone low, possibly some sandstone moderate. Thus, much bedrock has very low intergranular permeability, much low, possibly some moderate. Low to moderate fracture permeability in some to much shallow bedrock. Much to most mantle low to very low, some to much moderate.

Surficial mantle: Much to most clayey, some to much granular. Some or more of both dark granular soil, such as sample DU6A, and dark clayey soil, such as sample DU6B.

Expansivity: Most bedrock unexpansive, much may be expansive (shale). Much to most mantle significantly expansive, some unexpansive, probably some severely expansive. Samples: DU6A, dark clayey silt soil, free swell 39 percent; DU6B, dark clay soil, free swell 60 percent.

Sources: Newton, 1948; Robinson, 1956; three stations.

MAP UNIT 529

Geologic unit, (age), and location: Monterey Group, Rodeo Shale (T), in the East Bay Hills.

Summary: Much of both siliceous rock and nonsiliceous shale and mudstone, lesser fine-grained sandstone. Probably much bedrock expansive, much mantle severely expansive.

Expression in aerial photographs: Largely soft topography that is uniform and smooth, but in places includes some more resistant material of light tone.

Composition: Much is siliceous rock, mainly porcelaneous shale and subporcelaneous mudstone, and much is nonsiliceous, argillaceous, silty, sandy, and tuffaceous shale and mudstone; less abundant fine-grained sandstone, both tuffaceous and clayey, and siltstone. Ham (1952) called shale ferruginous; shale includes scattered concretions. Exposures are largely siliceous rock. At Las Trampas Ridge, middle part of unit is siliceous shale (Ham, 1952). Unit includes rare limestone that is impure, ferruginous, in places chalky; on Las Trampas Ridge, unit includes three persistent horizons of lenticular chalky limestone (Ham, 1952). See section on Sobrante Ridge by Sheehan (1956). Minor hard outcropping rock, including silicified diatomite and porcelanite (Robinson, 1956).

Hardness: Pieces of siliceous rock are brittle and range from firm to hard, much quite firm, both where fresh and weathered. Nonsiliceous shale pieces are firm to soft where weathered. Sandstone firm to soft. Concretions mostly hard, some firm. Limestone hard where fresh, some firm and chalky where weathered.

Bedding: Largely absent to indistinct in thin to very thick (20-ft or more) beds; called massive by Ham (1952). Most exposures are apparently unbedded, obscured by blanket of rock chips. Much thin to medium bedding reported by Sheehan (1956) near Sobrante Ridge; some medium beds (Ham, 1952). Limestone is mostly thin to medium, but near Las Trampas Ridge occurs in persistent horizons of lenticular bodies as thick as 7 ft. Concretions are mostly thick and elongate parallel to bedding.

Parting: Present at close to very close spacing in most of unit (porcelaneous shale and nonsiliceous shale); crude parting at close to moderate

spacing in mudstone and porcelaneous mudstone. Parting is less pronounced than in unit 531. Radbruch and Case (1967) described unit as fissile. Ham (1952) described some beds at Las Trampas Ridge as partly fissile. In places, parting occurs only to depth of several feet in weathered clayey rock; below that, mudstone fracture.

Fracture: In this unit, fracture is more prominent than bedding. Abundant pieces on cut slopes result from weathering fracture at close to very close, some moderate (as much as 3-4 in.), spacing. Also present are two or more sets of parallel original fractures that are mostly at moderate to close spacing, some as much as 5 ft in places; these produce slabs that fall from cuts. Concretions have mostly moderate spacing, some wide. Sandstone probably has close to moderate spacing of both original and weathering fracture.

Permeability: Intergranular permeability of bedrock mostly very low, some low (siltstone and sandstone). Much shallow bedrock has low to moderate fracture permeability. Probably much mantle very low, some low, some to much moderate.

Weathering: In siliceous rock, some is fresh (dark) at depth of 20 ft, most appears weathered to depths greater than 25-30 ft (depth of cut); weathering fracture definitely extends to depths greater than 30 ft, freshness of pieces is more difficult to judge. Sandstone unknown, probably weathered to depths more than 15 ft. In places, parting only to depth of several feet, iron staining on fractures to depths greater than 30 ft.

Surficial mantle: Probably largely clayey, some to much granular. Two types, mildly cracked light-colored silt-clay soil, like sample Ml2A, and dark cracked clay soil. Radbruch and Case (1967) reported that soil generally is less than 1 ft thick and bare slopes are common.

Expansivity: Much bedrock unexpansive, probably much expansive. Much mantle severely expansive, much significantly expansive. Samples: Ml2A, very mildly cracked silt-clay soil, typical, free swell 72 percent; Ml2B, well-cracked dark clay soil, free swell 132 percent; BV14, moderately cracked clay soil, free swell 113 percent; BN21, typical silty clay soil, free swell 133 percent.

Stratigraphic thickness: Maximum thickness is 700 ft (Radbruch and Case, 1967). Thickness is highly variable: 350 ft on Las Trampas Ridge (Ham, 1952); in places, too thin to map.

Sources: Ham, 1952; Lawson, 1914; Newton, 1948; Radbruch, 1969; Radbruch and Case, 1967; Robinson, 1956; Sheehan, 1956; five stations.

MAP UNIT 530

Geologic unit, (age), and location: Monterey Group, Tice Shale (T), only in the East Bay Hills.

Summary: Poorly exposed; probably much siliceous rock, much nonsiliceous clayey rock, minor to some siltstone and sandstone. Much to most mantle is severely expansive.

Expression in aerial photographs: At Oursan Ridge, forms swale but includes several light-toned resistant bands 30-75 ft in width between nonresistant zones 100-200 ft in width. In Dublin-Cull Canyon area, unit is largely swale-former, very subtly and finely banded, but includes some resistant intermediate topography of light tone.

Composition: Includes siliceous shale, largely porcelaneous shale, some chert in places (as on Pinole Ridge); and nonsiliceous argillaceous and sandy shale grading to subporcelaneous shale and mudstone. Some weathers white, some has pinkish cast. Lesser siltstone and fine- to medium-grained sandstone, some cemented, most clayey or tuffaceous. Minor chalky limestone or diatomaceous rock, sandy limestone, and hard siliceous carbonate rock (Sheehan, 1956). Similar to Rodeo Shale (unit 529).

Proportions uncertain, probably variable. Sheehan (1956) suggested that at San Pablo Dam unit consists of much siliceous shale and much nonsiliceous shale, whereas on Pinole Ridge it consists largely of poorly exposed siliceous rock. Much of both porcelaneous shale and nonsiliceous shale reported in Dublin-Cull Canyon area. Swale-forming expression in aerial photographs suggests that most of unit is nonsiliceous or only slightly siliceous.

Hardness: Porcelaneous shale and chert have largely hard pieces where fresh and weathered, subporcelaneous rock firm to quite firm. Nonsiliceous shale has firm pieces and firm to soft rock mass. Some sandstone hard, most firm to soft where weathered. Siliceous carbonate rock hard. Limestone probably firm where chalky, otherwise hard where fresh and weathered.

Bedding: Siliceous shale generally is distinctly laminated, and occurs in thin to very thick distinct beds between nonsiliceous shale or sandstone. Radbruch and Case (1967) reported that beds are mostly less than 1 in. thick. Sheehan (1956) reported largely "thin-bedded" siliceous rock on Oursan Ridge. For Dublin-Cull Canyon area, Hall (1958) reported much thin to medium siliceous shale interbedded with nonsiliceous shale, but also much very thick or indistinct bedding. Occasional sandstone forms distinct interbeds or dikes. Nonsiliceous shale is present as thin to medium interbeds and as thick to very thick(?) beds, no good exposures. Limestone in medium to thick distinct beds and lenses; siliceous carbonate thick.

Parting: Where weathered, present throughout siliceous shale and probably most nonsiliceous clayey rock at very close to moderate spacing; much is very fissile. At depth, parting along internal lamination may not be an effective planar weakness.

Fracture: In porcelaneous shale, very close to moderate spacing, largely close, across fissility. In nonsiliceous shale, close to very close spacing where weathered. In sandstone, probably close to wide spacing. In limestone, probably moderate to wide spacing, siliceous carbonate wide.

Permeability: Most bedrock has very low intergranular permeability, minor to some low (in sandstone and siltstone). Low to moderate fracture permeability in much shallow bedrock (siliceous rock). Most mantle very low to low.

Weathering: Porcelaneous shale is fissile (parting opened) to depths greater than 7 ft.

Surficial mantle: Largely clayey. Radbruch and Case (1967) reported generally clayey soil 1-3 ft thick. In some areas soil is sparse and stony, little vegetation.

Expansivity: Much bedrock unexpansive, much may be expansive. Much to most mantle severely expansive, much may be significantly expansive. Samples: BV7, mildly cracked stony silty clay soil, free swell 85 percent; BV35, moderately cracked clay soil, free swell 85 percent.

Stratigraphic thickness: Lawson (1914) reported 460 ft in Tice Valley. Maximum thickness of 1,100 ft (Sheehan, 1956), may include Oursan Sandstone and Claremont Shale. About 200 ft on Pinole Ridge (Sheehan, 1956); 400 ft in Crow Canyon (Newton, 1948); 250 ft in Dublin-Cull Canyon area (Hall, 1958).

Sources: Case, 1963; Hall, 1958; Lawson, 1914; Newton, 1948; Radbruch, 1969; Radbruch and Case, 1967; Robinson, 1956; Sheehan, 1956; three stations.

MAP UNIT 532

Geologic unit, (age), and location: Monterey Group, Tice Shale (T), only between Niles Canyon and Calaveras Reservoir, east of Fremont.

Summary: Consists of both hard siliceous shale, largely porcelanite and porcelaneous shale, and firm mudstone grading to clayey very fine grained sandstone; proportions vary from 90 percent siliceous shale to more than two-thirds firm mudstone and clayey sandstone. Minor hard beds to thick have fracture spacing to wide. Differs from Claremont Shale (unit 508) in that less chert, brown rather than white weathered surfaces, and less is thin bedded (Hall, 1958). Some to much mantle is severely expansive.

Expression in aerial photographs: Intermediate topography, variable from resistant to nonresistant. Includes light-toned, resistant bands (largely siliceous shale) 20-100 ft in width, variably abundant; most sections show some or more, generally less than one-third of unit. In some places, as

near Morrison Canyon, unit is uniformly banded in 20- to 40-ft, predominantly light-toned, bands. In most places, unit is largely dark in tone and nonresistant but contains prominent light-toned bands that are very resistant and form hogbacks. Dark-toned bands are as wide as 400 ft.

Composition: (1) Porcelaneous shale, porcelanite, and lesser chert. These rocks are laminated; some or more are thinly interbedded with mudstone and shale, some or more simply parted. Includes lesser hard clay-saturated sandstone thinly interbedded with mudstone. (2) Limestone(?), siliceous, as beds, lenses, and nodules, largely within siliceous rock. (3) Diatomite, firm, brittle, low density; accompanies some porcelaneous shale. (4) Mudstone grading through sandy mudstone to very fine grained clayey sandstone, all similar in properties; and lesser shale, siltstone, fine-grained sandstone of low permeability, and slightly siliceous (subporcelaneous) pink foraminiferal mudstone. (5) Clay-saturated fine-grained sandstone, weathers spheroidally.

Proportions vary from 90 percent siliceous shale (composition 1) and 10 percent clayey rock (composition 4), to less than one-third siliceous shale, one-third clayey rock (composition 4), and more than one-third clayey sandstone (composition 5). Limestone and diatomite (compositions 2 and 3) are minor constituents that accompany siliceous shale.

Hardness: Siliceous shale is hard and brittle where fresh and weathered; interbedded mudstone and shale firm. Diatomite firm, brittle, and low density; limestone hard. Clayey rock (composition 4) firm where weathered, probably firm where fresh. Clayey sandstone hard where fresh (cores of spheroids), firm where weathered.

Bedding: In siliceous shale, varies from (a) very thin to medium beds of laminated siliceous rock interbedded with nonsiliceous mudstone and shale, to (b) unbedded but laminated porcelaneous shale. Clayey rock and clayey sandstone (compositions 4 and 5) are unbedded to indistinctly bedded in medium to very thick beds, the beds distinguished by differences in grain size and spacing of weathering fracture. Hard siliceous limestone bodies medium to thick.

Parting: In siliceous shale (composition 1), good parting at very close to moderate spacing, mostly close. In clayey rock (composition 4), much at close to moderate spacing, some unparted. Compositions 2, 3, and 5 lack parting.

Fracture: Unbedded siliceous shale has mostly close, ranging from very close to moderate, spacing of weathering fracture on moderate to wide original fracture spacing. Spacing in bedded siliceous shale largely close to very close, rarely moderate. Spacing in diatomite close to moderate, in limestone moderate to wide. Clayey rock (composition 4) has close to very close spacing of weathering fracture on moderate to wide original spacing. Clayey sandstone (composition 5) has moderate to wide original fracture that defines spheroids, and close to very close spacing of weathering fracture.

Permeability: Very low intergranular permeability in all of unit except some clayey sandstone, which has very low to low permeability. Siliceous shale has low to moderate fracture permeability in shallow bedrock. Thus, most to almost all bedrock has very low intergranular permeability, minor to some low. Some to almost all shallow bedrock has low to moderate fracture permeability. Probably most mantle very low to low, some to much moderate.

Weathering: Siliceous rock is largely unaffected by weathering except for opening of fractures and partings. Clayey rock weathered to depths greater than 6 ft. Much limestone fresh to surface (crops out).

Surficial mantle: Probably largely clayey, some to much granular (silty). Soils vary with rock type and follow proportions described above. Both dark silty soil, such as sample NL3A, and sandy clay soil, such as sample NL6, overlie siliceous rock. Weathered mudstone, such as sample NL3B, is typical of weathered clayey rock, but clay soils overlying clayey rock are locally more expansive.

Expansivity: Bedrock ranges from largely unexpansive to probably largely significantly expansive. Most mantle significantly expansive, some to much severely expansive. Samples: NL3B, typical weathered mudstone, mildly cracked, free swell 74 percent; NL3A, uncracked dark silty soil, typical on siliceous shale, free swell 60 percent; NL6, mildly cracked sandy clay soil on siliceous shale that has many nonsiliceous clayey interbeds, free swell 90 percent.

Stratigraphic thickness: Generally 200-900 ft (Hall, 1958).

Sources: Hall, 1958; six stations.

MAP UNIT 533

Geologic units, (age), and location: Oursan Sandstone, Claremont Shale, and Sobrante Sandstone, undivided (T), of the Monterey Group; near Briones Reservoir in the East Bay Hills.

Summary: Unit is combination of units 333, 534, and 392, which are distinguished in the source maps, where these are too thin to distinguish on the maps of this report. Largely dirty to tuffaceous sandstone, minor to some clean sandstone, minor to some siliceous shale and siltstone, minor to some clayey mudstone and shale, minor cemented rock. Materials like unit 534, about 130 ft in stratigraphic thickness, occupy a band parallel to strike near middle of unit, separating sandstone like unit 333 (adjacent to unit 530) from sandstone like unit 392.

Permeability: Intergranular permeability of bedrock largely low, some very low, minor to some moderate. Some shallow bedrock has low fracture permeability. Probably much mantle moderate, much very low to low.

Surficial mantle: Probably much granular, much clayey.

Expansivity: Probably most bedrock unexpansive, some expansive (clayey rock). Much mantle severely expansive, much significantly expansive to possibly unexpansive.

MAP UNIT 534

Geologic unit, (age), and location: Monterey Group, Claremont Shale (T), only in area near Pinole Creek at northern end of the East Bay Hills.

Summary: Materials are similar to those described for unit 506, but proportions are different; see unit 506 for description of physical properties.

Composition: Section by Lutz (1951) shows much sandstone, which is probably tuffaceous (Radbruch and Case, 1967), some hard to quite firm siliceous shale and siltstone, and probably some clayey shale (covered zone). Lawson (1914) reported that soft, chalky bituminous shale resembling diatomaceous earth accompanies cherty rock in Sobrante anticline area. Sheehan (1956) gave section representative of Pinole Creek anticline that shows much unbedded tuffaceous sandstone; he noted that thinning of unit is commonly at expense of sandstone; that is, where unit is thin it is largely siliceous rock.

Permeability: Much bedrock probably has low intergranular permeability (sandstone); some very low (shale); and some very low that has low to possibly moderate fracture permeability in shallow bedrock (siliceous rock). Much to most mantle very low.

Surficial mantle: Much to most clayey.

Expansivity: Most bedrock unexpansive, probably some expansive (shale). Much to most mantle severely expansive. Sample BV21, moderately cracked dark stony clay soil, typical, free swell 90 percent, is clearly derived from this unit.

Stratigraphic thickness: 133 ft (Lutz, 1951).

Sources: Lawson, 1914; Lutz, 1951; Radbruch, 1969; Radbruch and Case, 1967; Sheehan, 1956; one station.

MAP UNIT 535

Geologic unit, (age), and location: Monterey Group, diatomite unit (T), at northern end of the East Bay Hills near Pinole.

Summary: Much is diatomite and diatomaceous shale that have ash content, much is sandstone similar to unit 332. Less abundant tuffaceous fine-grained sedimentary rock. Underlies area known as "White Hills"

near El Sobrante. More resistant than unit 332. Some or more mantle is severely expansive.

Composition: (1) Diatomite and diatomaceous shale that have ash content, some of which is silicified as chert in places. (2) Fine-grained, well-sorted, variably tuffaceous and clayey sandstone similar to that described for unit 332. (3) Tuffaceous rock, some silicified, including siltstone, mudstone, and very fine grained sandstone. (4) Hard, thick concretions as much as 4 ft in length. Unit includes much diatomaceous rock and much sandstone similar to unit 332, each dominant in different exposures; lesser tuffaceous rock.

Hardness: Diatomite and diatomaceous shale have firm to hard pieces, brittle, much of low density; sandstone firm, some soft, friable (Sheehan, 1956); tuffaceous rock firm to hard, much brittle. Silicified beds (chert) hard, brittle. Concretions hard.

Bedding: Must be distinctly bedded in part, indistinctly bedded in part, but exposures poor. Diatomite occurs in beds as thick as 20 ft or more that contain medium internal silicified beds. Sheehan (1956) reported unit to be unbedded to very indistinctly bedded and lacking rhythmic banding, and showed major compositions as intervals more than 100 ft in thickness. Bailey (1930) reported diatomite more than 100 ft in thickness overlying alternating medium to thick beds of diatomite and sandstone. Some sandstone beds laminated internally.

Parting: In some places, diatomite and diatomaceous shale show good parting at close to very close spacing; in other places, diatomite shows crude parting at close to wide. Some parting in diatomaceous shale is pronounced where weathered, less pronounced where fresher. Absent in sandstone. Probably present at some bedding planes, absent at others. Sheehan (1956) reported that unit is very indistinctly bedded and not fissile.

Fracture: Poorly parted diatomite and diatomaceous shale have moderate to wide spacing of major fractures, on which is superimposed very close to moderate spacing of weathering fracture; some to most of this rock weathers spheroidally on weathering fracture, producing small to very small pieces that are typical. Fissile diatomaceous shale has close to moderate spacing of cross fracture. Spacing in sandstone is close to wide, mostly moderate to wide. Tuffaceous rock has close to moderate spacing.

Permeability: Intergranular permeability of diatomite and diatomaceous shale low to very low, sandstone low, tuffaceous rock low to very low, silicified beds very low; thus, entirely low to very low intergranular permeability in bedrock. Much shallow bedrock has low to possibly moderate fracture permeability. Probably most mantle low to very low, some moderate.

Weathering: Uniform to depths greater than 10 ft, but parallel parting in diatomaceous shale is decidedly less pronounced at depth of 8 ft than near the ground surface.

Surficial mantle: Probably largely clayey, some granular.

Expansivity: Most bedrock unexpansive, probably some expansive (tuffaceous mudstone). Most mantle is expansive, some or more is severely expansive. Sample R3, mildly cracked dark silty clay soil, typical, free swell 92 percent. See sample for unit 332.

Stratigraphic thickness: See section of Tice Shale on Sobrante Ridge by Sheehan (1956).

Sources: Bailey, 1930; Sheehan, 1956; six stations.

MAP UNIT 536

Geologic unit, (age), and location: Lambert Shale (T), only in Santa Clara County part of Santa Cruz Mountains.

Summary: Largely partly siliceous clayey rock, some sandstone, minor chert and dolomite. Bedrock and mantle are probably largely unexpansive, some of each significantly expansive.

Composition: Largely mudstone, siltstone, and claystone, in most exposures partially cemented by silica or carbonate minerals; induration varies, and chert occurs in places. According to Dibblee (1966), siliceous rock is more abundant in upper part of section. Unit also includes minor to some sandstone, mostly medium grained, in bodies as thick as 100 ft, and minor glauconitic sandstone and fine-grained dolomite in places.

Hardness: Clayey rock is firm to hard and brittle, chert hard. Sandstone is commonly firm, hard in places; dolomite hard.

Bedding: Clayey rock is unbedded or indistinctly bedded; chert is distinctly laminated. Glauconitic sandstone and dolomite occur in medium to thick distinct beds. Sandstone bodies as thick as 100 ft lack internal bedding.

Parting: Present in some at very close spacing, absent in much. Present in chert at very close to moderate spacing.

Fracture: Largely close spacing, some moderate, where weathered. Sandstone has moderate to wide spacing, dolomite probably close to wide.

Permeability: Bedrock has largely very low intergranular permeability, minor to some low (in sandstone). Most shallow bedrock has low fracture permeability, probably some moderate. Mantle probably largely low, some moderate, possibly some very low.

Weathering: Spheroidal weathering in some.

Surficial mantle: Probably largely clayey, some granular.

Expansivity: Bedrock and mantle probably largely unexpansive, some of each significantly expansive. See samples in unit 500.

Stratigraphic thickness: 4,800 ft.

Sources: Dibblee, 1966; Ellen and others, 1972.

MAP UNIT 537

Geologic unit, (age), and location: Markley Formation, upper part of Sidney Flat Shale Member of Fulmer (1964) (T), in the monocline north of Mount Diablo.

Summary: Largely fissile shale to siltstone; some partially siliceous organic shale; minor sandstone, calcite-cemented concretions, and limestone nodules. Most bedrock and mantle is severely expansive.

Expression in aerial photographs: Occupies more resistant intermediate topography than does unit 538; includes largely ridges and hillslopes rather than swales, but most of unit is fairly nonresistant. Subdued hogback pattern. Consistently subtly banded, especially in more resistant areas; most bands are 5-30 ft wide, generally largely dark in tone, and thinner light-toned bands are largely 5-10 ft wide, but as much as 30 ft.

Composition: (1) Interbedded shale, mudstone, siltstone, and lesser very fine grained sandstone, differing chiefly by silt content, fissility, and expansivity. (2) Organic shale grading to siltstone, diatomaceous, partially siliceous, weathers light gray. (3) Sandstone, fine to medium grained, some tuffaceous. (4) Calcite-cemented concretions and limestone nodules.

Proportions uncertain. Our field observations suggest almost all (about 90 percent) composition 1, some (10 percent) composition 2, and minor sandstone (composition 3). Clark and Campbell (1942) and column by Fulmer (1964) showed almost entirely siliceous shale. Expression in aerial photographs suggests more than 50 percent composition 1, but probably more than 20 percent composition 2. Concretions and nodules minor, but reported to be considerable in some places (Clark, 1912).

Hardness: Largely firm where fresh and weathered; some siliceous organic shale is probably quite firm to hard (Fulmer, 1964), and some organic shale and siltstone is brittle. Calcite-cemented concretions and nodules are hard.

Bedding: Fulmer (1964) called unit thin bedded. Our observations show largely distinct very thin to thin beds or parting, as well as distinct to indistinct compositional changes at thin to very thick (8 ft or more). Expression in aerial photographs suggests zones of clayey rock about 5-30 ft thick between light-toned zones, which are probably organic shale and siltstone, 5-10 ft thick, some as thick as 30 ft. Concretions or nodules as large as medium by 3 ft in length.

Parting: Present throughout weathered rock at close to very close spacing, some moderate. Nearly all material observed is fissile where weathered, much highly fissile or platy. Probably much has parting at close to wide spacing where fresh, but many compositional changes are subtle

(indistinct), and so parting in fresh rock probably ranges from close to very wide (more than 8 ft).

Fracture: Close to moderate spacing of weathering fracture on original close to wide, mostly moderate, spacing. Hard concretions and nodules have moderate spacing. Where observed, blocky fracture at depth becomes overshadowed by fissility where weathered. Weathered rock produces blanket of chips and small plates.

Permeability: Intergranular permeability of shale and mudstone very low, of siltstone and sandstone low. Thus, bedrock has largely very low intergranular permeability, some low. Probably some moderate to high fracture permeability in shallow bedrock, as in unit 539. Most mantle very low, minor to some moderate.

Weathering: To depths greater than 5 ft. Prominent fissility develops where weathered.

Surficial mantle: Largely clayey, minor to some granular. In traverse at sample locality AS20, half is popcorn clay soil, such as sample AS20A, and half is fluffy clay soil, such as sample AS20B. Uncracked thin silty soil over siltstone at sample locality AS19.

Expansivity: Most bedrock severely expansive. Most mantle severely expansive, minor to some significantly expansive to unexpansive. Bedrock samples: AS17B, well-cracked weathered shale, typical, free swell 130 percent; AS20C, weathered organic siltstone, free swell 97 percent. Surficial mantle samples: AS20A, popcorn clay soil, typical, free swell 149 percent; AS20B, well-cracked fluffy clay soil, typical, free swell 100 percent (exaggerated); AS17A, well-cracked to moderately cracked clay soil, typical, free swell 138 percent; AS18, dark popcorn clay soil, typical, free swell 150 percent.

Stratigraphic thickness: About 800 ft (Brabb and others, 1971).

Sources: Bartow, 1985; Brabb and others, 1971; Clark, 1912, 1918; Clark and Campbell, 1942; Colburn, 1961; Fulmer, 1964; Johnson, 1964; five stations.

MAP UNIT 538

Geologic unit, (age), and location: Markley Formation, lower part of Sidney Flat Shale Member of Fulmer (1964) (T), in the monocline north of Mount Diablo.

Summary: About half mudstone and shale interbedded with lesser sandstone and half organic siliceous shale and nonsiliceous shale. Most mantle and probably most bedrock are severely expansive.

Expression in aerial photographs: Soft intermediate topography that lacks ribbing, some landsliding; largely occupies swales and nonresistant areas. In several places includes minor resistant bands as wide as 20 ft, and in a few other places shows subtle banding 5-20 ft in width.

Composition: Various materials are described in the literature. These are different enough from each other and from our observations to suggest considerable variation along strike. Unit includes: (1) Mudstone and shale interbedded with some to more than half sandstone. Sandstone is medium to coarse grained, poorly sorted, saturated to nearly saturated by clay and tuffaceous material, contains pumiceous clasts. Some sandstone is notably clayey. (2) Mudstone and shale without interbedded sandstone. (3) Shale, carbonaceous, sandy or argillaceous. (4) Organic shale, light gray, varying from slightly cherty thin beds repetitively interbedded with clay shale to soft diatomite that is somewhat punky (Clark, 1912; Clark and Campbell, 1942; Weaver, 1944; Society of Economic Paleontologists and Mineralogists, 1950; Colburn, 1961; Johnson, 1964). (5) Fine-grained micaceous sandstone interbedded with thinly bedded hard siliceous shale (Fulmer, 1964). (6) Silty sandstone, siltstone, and shale (Fulmer, 1964).

Proportions uncertain. In our one good traverse (sample locality AS21), half is composition 1, half composition 2; some or more of both mudstone and shale are present. In Markley Canyon, section by Fulmer (1964) shows about half composition 5, half composition 6. Also reported are some of both compositions 3 and 4. Thus, we infer about half of unit to be mudstone and shale interbedded with sandstone (compositions 1, 6), the other half about equally divided areally between nonsiliceous mudstone and shale (compositions 2, 3) and organic shale (compositions 4, 5), the nonsiliceous rock largely to the east, grading westward to organic shale.

Hardness: Mudstone and shale are firm where fresh and weathered; most sandstone is weathered firm to soft, some quite firm; siliceous shale hard to firm where fresh and weathered; diatomite firm to soft, punky, low density.

Bedding: Composition 1 (mudstone and shale interbedded with sandstone) shows distinct thin to thick sandstone beds between medium to 4-ft or more beds of mudstone and shale. Bedding unknown in nonsiliceous mudstone and shale (compositions 2, 3). Some organic shale is distinctly and rhythmically bedded in thin to medium beds of siliceous shale between similar thicknesses of nonsiliceous shale, some (diatomite) is probably in thick to very thick beds.

Parting: Probably present in most of unit (mudstone, shale, and siliceous shale) at very close to moderate spacing. Present in some sandstone at close spacing, producing platy slabs. Probably wide to very wide spacing in diatomite.

Fracture: Probably close to very close spacing of weathering fracture in mudstone and shale, probably on moderate to wide original spacing. At spacing similar to bed thickness in sandstone (largely close to moderate, probably some wide), but in quite firm sandstone at moderate spacing. Probably close to moderate spacing in siliceous shale, unknown in diatomite.

Permeability: Intergranular permeability in mudstone, shale, and siliceous shale very low, in sandstone and diatomite low. Thus, intergranular permeability of bedrock is largely very low, some low. Probably moderate fracture permeability in some shallow bedrock. Most mantle very low.

Weathering: No observations. Called deeply weathered. In bedded siliceous shale, harder beds weather out against interbeds.

Surficial mantle: Largely clayey. Sample AS21A is typical soil on composition 1 (about one-half of unit); sample AS21B is typical on compositions 2 and 3 (about one-fourth of unit).

Expansivity: Probably most bedrock severely expansive, some to much unexpansive. Most mantle severely expansive. See bedrock samples for unit 537. Surficial mantle samples: AS21A, sandy clay soil, moderately cracked, typical, free swell 90 percent; AS21B, silty clay soil, moderately cracked, typical, free swell 122 percent.

Stratigraphic thickness: About 500 ft (Brabb and others, 1971).

Sources: Bartow, 1985; Brabb and others, 1971; Clark, 1912, 1918; Clark and Campbell, 1942; Colburn, 1961; Fulmer, 1964; Johnson, 1964; Society of Economic Paleontologists and Mineralogists, 1950; Weaver, 1944; two stations.

MAP UNIT 539

Geologic unit, (age), and location: Markley Formation (T), only in area east of Mount Diablo. Called Kellogg Shale by Clark and Campbell (1942).

Summary: About equally abundant clay shale and organic shale, minor sandstone. All rock very fissile, moderate to high fracture permeability in much weathered rock. Severely expansive bedrock and mantle.

Expression in aerial photographs: Low, gently rounded hills, some subtle banding 40-100 ft in width.

Composition: About equally abundant interbedded clay shale and white-weathering, somewhat siliceous, organic silty shale; both are laminated and highly fissile. Gypsum crystals abundant in open parting and fracture in shale. Clark and Campbell (1942) reported that the apparently silty rock contains abundant organic remains (radiolarians?). Minor sandstone reported at base of unit.

Hardness: Where weathered, organic silty shale is firm and brittle, clay shale firm when dry to soft when damp. Fresh rock probably similar.

Bedding: Indistinct to distinct interbedding in very thick (4- to 25-ft) beds, all of which are internally laminated. Sandstone at base of unit reported to be 8 ft thick.

Parting: Pronounced fissility in both major compositions at very close spacing; the most prominently fissile unit observed during this study. Clark and Campbell (1942) reported both paper shale and thinly parted shale, laminated between partings.

Fracture: Organic silty shale has moderate to close spacing of weathering fracture on moderate to wide original spacing, but fissility forms dominant planes of weakness and breakage. Clay shale probably has moderate original spacing, probably close spacing of weathering fracture.

Permeability: Intergranular permeability of bedrock very low, minor low (in sandstone). In weathered organic shale (much of unit), moderate to high fracture permeability has caused rapid drainage of settling pond at sample locality BHS21; this permeability probably develops where parting is opened by gypsum in weathered zone. Very low in mantle.

Weathering: In much of unit, weathering, accompanied by growth of gypsum crystals, opens parting to dramatically increase permeability to depths greater than 25 ft.

Surficial mantle: Clayey. Silty clay soil, such as sample BHS21C, is typical.

Expansivity: Almost all bedrock and mantle is severely expansive. Samples: BHS21B, clay shale, typical, mildly cracked on surface of cut, free swell 129 percent; BHS21C, typical silty clay soil, free swell 120 percent.

Stratigraphic thickness: 100-400 ft (estimate from map); 130 ft (Clark and Campbell, 1942).

Sources: Clark and Campbell, 1942; one station.

MAP UNIT 540

Geologic units, (age), and location: Markley Formation and Nortonville Shale, undivided (T), east of Mount Diablo.

Summary: Largely shale and organic shale like unit 539. A band of shale and mudstone like unit 438, about 30 ft in stratigraphic thickness, is present along southwest boundary (Clark and Campbell, 1942). Minor sandstone.

Permeability: Intergranular permeability of bedrock very low, minor low. Moderate to high fracture permeability in much shallow rock. Mantle very low.

Surficial mantle: Clayey.

Expansivity: Almost all bedrock and mantle is severely expansive.

Sources: Clark and Campbell, 1942; one station in unit 539.

MAP UNIT 541

Geologic unit, (age), and location: Mudstone (T), in Santa Cruz Mountains near Loma Prieta and Mount Madonna.

Summary: Largely mudstone, much of which may be slightly siliceous. Minor to some sandstone, of which some to most is calcite cemented. Most mantle is significantly expansive. Appears to be mismapped near Sveadal.

Expression in aerial photographs: Too narrow to develop expression.

Composition: (1) Mudstone, much of which may be subporcelaneous (inferred from hardness and lack of free clay in weathered zone). (2) Shale. (3) Sandstone, medium to very coarse grained, moderately well sorted, much glauconitic, calcite cemented in part. Unit is largely mudstone, minor to some shale; minor to some sandstone, especially near contact with unit 423. Of sandstone, some to most is calcite cemented.

Hardness: Mudstone is firm, much quite firm, where weathered and fresh. Shale is firm. Sandstone is firm to soft where weathered and not cemented, hard to quite firm where cemented.

Bedding: Largely absent in mudstone, some indistinct at very thick. Sandstone beds distinct, medium to very thick (10 ft or more), between very thick mudstone.

Parting: Absent in mudstone. Present in shale (minor to some of unit) at very close spacing and on sandstone bedding contacts. Thus, largely absent.

Fracture: Mudstone has close to very close spacing of weathering fracture on close to wide stained original spacing. Shale probably similar. Sandstone has wide, some very wide (5-ft), spacing where cemented in very thick beds, close to wide spacing in uncemented beds and in cemented beds to thick.

Permeability: Mudstone has very low intergranular permeability and probably much low fracture permeability in shallow rock. Shale has very low intergranular permeability, sandstone low to moderate where not cemented, low to very low where cemented. Thus, intergranular permeability of bedrock largely very low, minor low to moderate. Most mantle moderate to low.

Weathering: In places, little free clay, shallow soils; in other places, poor stability of cut slopes suggests clayey materials. Some spheroidal weathering on original fracture.

Surficial mantle: Largely granular. Stony silt soil is typical. Thin soil, barren slopes.

Expansivity: Much bedrock may be significantly expansive, much unexpansive. Most mantle significantly expansive. Sample LMP9, typical stony silt soil, uncracked, free swell 70 percent. No cracking noted.

Sources: McLaughlin and others, 1971; two stations.

MAP UNIT 600

Geologic unit, (age), and location: Great Valley sequence, conglomerate unit (K), only in the East Bay Hills near Dublin.

Summary: Briefly seen in field. Conglomerate and minor sandstone. Most to almost all mantle is unexpansive to significantly expansive.

Expression in aerial photographs: Forms well-ribbed slopes similar to adjacent unit 644.

Composition: Poorly sorted conglomerate of well-rounded to subangular pebbles, cobbles, and lesser boulders in matrix of poorly sorted silty and clayey medium- to coarse-grained sandstone. Much may be calcite cemented where fresh (see unit 601). Includes beds and lenses of loosely consolidated arkosic sandstone and silty micaceous fine-grained sandstone. Unit is probably almost entirely conglomerate, minor sandstone.

Hardness: Some or more conglomerate matrix is hard in weathered zone, most firm to soft; probably firm to hard where fresh. Most clasts are hard to firm, some soft, where weathered.

Bedding: Largely very thick; monotonous sequence hundreds of feet thick.

Parting: Largely absent.

Fracture: Probably largely very wide spacing.

Permeability: Largely low intergranular permeability in bedrock, some very low (where cemented), some moderate possible especially in weathered rock (see unit 601). Most mantle moderate.

Weathering: Most is weathered firm to soft to depths greater than 15 ft, probably greater than 30 ft.

Surficial mantle: Largely granular, possibly some clayey (see unit 601). Pebbly sandy silty soil, such as sample DU4, is typical.

Expansivity: Almost all bedrock is unexpansive. Most to almost all mantle is unexpansive to significantly expansive. Sample DU4, typical light-brown mildly cracked soil, free swell 56 percent (exaggerated?).

Stratigraphic thickness: Average 400 ft.

Sources: Hall, 1958; one station.

MAP UNIT 601

Geologic unit, (age), and location: Great Valley sequence, predominantly conglomerate unit (K), only east of San Jose. Includes Oakland Conglomerate (Crittenden, 1951).

Summary: Largely conglomerate, uniform over large areas (Crittenden, 1951); lesser interbedded sandstone and mudstone. Some or more conglomerate and interbedded sandstone is calcite cemented where fresh.

Several mapped bodies at least are largely sandstone and some probably include flysch. Much mantle severely expansive.

Expression in aerial photographs: Large area near Evergreen shows long ridges (along strike?) that have both intermediate and hard crests; weak ribbing, but regular spacing of ridges. In smaller areas, consists of intermediate topography that has rounded crests and no ribbing, but shows scattered areas of outcrop and resistant rock, probably where cemented. No tonal banding, but parallel pattern of ridges.

Composition: (1) Conglomerate of pebbles to boulders in medium- to coarse-grained sandstone matrix. Clasts are subrounded to well rounded and mostly haphazard in orientation; they are as large as 12 in. in diameter, and generally some to most are more than 3 in., minor to some more than 6 in. Much is calcite cemented where fresh; most has clay coatings at least around clasts (some is clay saturated) where weathered, resulting in breakage around clasts in weathered rock. (2) Sandstone, medium to very coarse grained, much calcite cemented where fresh. Most is of low intergranular permeability where weathered (owing to fines), some is clean and has potential moderate permeability. (3) Flysch of repetitive thin to medium beds of sandstone between dominant mudstone.

Unit is largely conglomerate, some sandstone and flysch. However, in at least a few bodies conglomerate constitutes only one-tenth to one-fourth of unit, the remainder being largely sandstone and probably some flysch.

Hardness: Conglomerate clasts hard. Conglomerate matrix varies from hard where calcite cemented, to firm where uncemented, to soft and clayey, all present in both fresh and weathered zones. Matrix is probably largely quite firm to hard where fresh, firm where moderately weathered, firm to soft where well weathered. Sandstone is hard where cemented (fresh) and quite firm to firm weathered, but in many places remains hard and cemented in the weathered zone.

Bedding: Mostly absent to very obscure (Crittenden, 1951). In places, distinct medium to 5-ft sandstone beds are irregularly interbedded with conglomerate.

Parting: Mostly absent. No parting on contacts between conglomerate and sandstone. Present in flysch at close to wide spacing.

Fracture: Conglomerate has wide to very wide (10-ft) spacing, mostly 3-8 ft. This spacing is effective in fresh and moderately weathered rock, but well-weathered rock has effective fracture spacing equal to clast size, close to moderate. Sandstone has close to 4-ft spacing, mostly moderate to wide.

Permeability: Very low intergranular permeability in conglomerate where cemented, largely low where weathered, but references suggest some moderate permeability, probably intergranular, in weathered zone over calcite-cemented rock. Sandstone has very low intergranular permeability where cemented, low to moderate where weathered; flysch low to very low. Thus, intergranular permeability of shallow weathered bedrock largely low, much moderate; of fresh bedrock, much very low, much low. Unit was considered an aquifer by Davis and Jennings (1954) and yields some water to domestic wells (California State Water Resources Board, 1955); contains numerous small springs (Crittenden, 1951). Probably much mantle moderate, much very low to low.

Weathering: Color change at depth of about 30 ft. Some hard cemented rock extends to within 10-15 ft of ground surface, some crops out.

Surficial mantle: Granular to clayey, probably much of each. Most soils stony. In traverse at sample locality SJE5, about half is uncracked granular soil, half is mildly cracked granular to clayey soil like sample SJE5. In traverse between sample localities CVR35 and CVR36, some uncracked granular soil, some clay subsoil (sample CVR35), and some clay soil (sample CVR36).

Expansivity: Bedrock is largely unexpansive. Much mantle unexpansive to possibly significantly expansive, much severely expansive. Samples: SJE5, mildly cracked sandy clayey soil, typical of much of unit, free swell 87 percent (exaggerated?); CVR35, dark pebbly and sandy clay subsoil, moderately cracked, free swell 105 percent; CVR36, mildly cracked black clay soil, typical at this station, free swell 102 percent. Unit includes minor to some clayey weathered bedrock like sample SJE2 of unit 660, free swell 80 percent.

Sources: California State Water Resources Board, 1955; Crittenden, 1951; Davis and Jennings, 1954; Templeton, 1912; eight stations.

MAP UNIT 602

Geologic unit, (age), and location: Great Valley sequence, predominantly conglomerate unit (K), only in Santa Cruz Mountains near Sierra Azul.

Summary: Largely conglomerate, some to locally dominant sandstone and mudstone. Conglomerate beds are very thick (tens of feet). Almost all bedrock and mantle is unexpansive.

Expression in aerial photographs: Hard to intermediate topography, much of each, varying only in sharpness of crests. Slopes are largely ribbed but spacing is irregular, and many ribs extend only part way up slope. Regular pattern of ribbing is interrupted by some outcrop in bands 10-20 ft in width (some as much as 50 ft in width) and bare, light-toned areas.

Composition: (1) Conglomerate of well-rounded clasts, largely pebbles and cobbles that average 2-3 in. in diameter (Bailey and Everhart, 1964) and typically are as much as 4 in. in diameter, but includes minor to some zones of boulders as large as 1 ft in diameter. In most conglomerate, clasts are tightly packed. Clasts consist largely of aphanitic to porphyritic mafic and felsic volcanic rock, lesser granitic clasts. Matrix is medium- to very coarse-grained graywacke of low permeability similar to nearby unit 647. Includes minor conglomeratic sandstone, clayey grit, and sandstone similar to matrix. In many places (Bailey and Everhart, 1964), especially near faults (Cummings, 1968), matrix of conglomerate is cemented by quartz and potassium feldspar. (2) Sandstone of composition similar to conglomerate matrix, interbedded with about equal amounts of mudstone, sandy mudstone, and dirty fine-grained sandstone that has poorly developed weathering fracture. Unit is largely conglomerate; some sandstone and mudstone, dominant locally.

Hardness: Conglomerate is largely firm where weathered, some hard to quite firm where weathered. Clasts are largely hard, some firm. Conglomerate and sandstone are hard where cemented. Interbedded sandstone and conglomeratic sandstone range from soft to hard, but most sandstone is firm to hard where weathered. Mudstone and dirty sandstone firm.

Bedding: Conglomerate occurs in lenticular beds generally more than 10 ft thick and in many places appears unbedded owing to beds many tens of feet thick. Conglomeratic sandstone occurs in pods and interbeds to thick or more; sandstone and grit interbeds and pods are as thick as 20 ft or more. Where conglomerate is absent or minor, much sandstone and mudstone occurs in distinct beds 20 ft or more in thickness, but some occurs as medium to thick sandstone between medium to very thick mudstone. Beds of cemented conglomerate are as thick as 9 ft (Cummings, 1968).

Parting: Largely absent. Present in mudstone at very close to moderate spacing; at contacts between sandstone and mudstone (moderate to 20-ft spacing); absent on contacts between sandstone and conglomerate.

Fracture: In conglomerate, original wide to 5-ft spacing, but in many to most places conglomerate is shattered at close to moderate spacing, so that effective fracture spacing in weathered rock is close to moderate. Blocks of cemented sandstone are as large as 8 ft in diameter (Cummings, 1968). Sandstone has close to moderate spacing in beds to thick, moderate to 4-ft spacing in very thick beds. Mudstone has close to very close spacing of weathering fracture on moderate to wide original spacing, and dirty sandstone has poorly developed weathering fracture. Cemented conglomerate breaks across clasts, uncemented conglomerate breaks around clasts; some is cemented, most uncemented.

Permeability: Intergranular permeability is low in most of unit (conglomerate, sandstone, and dirty sandstone); very low in some of unit (mudstone and cemented rock), but this has low to moderate fracture

permeability in shallow rock. Shallow shattered bedrock (much of unit) may have moderate fracture permeability. Most mantle moderate.

Weathering: Conglomerate matrix weathered to depths greater than 5 ft, probably greater than 15 ft. Some areas of bare rock.

Surficial mantle: Largely granular. Mantle is uncommonly thick in places. Includes some clayey mantle like sample LMP4.

Expansivity: Almost all bedrock and mantle is unexpansive. Most soil is uncracked. Sample LMP4, red sand-clay slopewash on mudstone, most clayey constituent, covers some of unit, free swell 41 percent.

Sources: Bailey and Everhart, 1964; Cummings, 1968; McLaughlin and others, 1971; three stations.

MAP UNIT 603

Geologic unit, (age), and location: Novato Conglomerate (K?), east of Marin highlands near San Pablo Bay.

Summary: Conglomerate of hard rounded pebbles, cobbles, and some boulders in clay- and silt-saturated sandstone matrix, bedded only by scattered lenticular sandstone interbeds. Mantle is unexpansive to significantly expansive.

Composition: Almost all is conglomerate of well-rounded, hard pebbles and cobbles that are generally less than 6 in. in diameter, most less than 3 in., but some boulders as large as 3 ft in diameter; clasts are rhyolite, quartz, chert, schist, quartzite, and quartz porphyry. Matrix of conglomerate is medium- to coarse-grained sandstone in which interstices are saturated by silt and clay. Unit contains minor scattered lenticular interbeds of sandstone similar to conglomerate matrix.

Hardness: Where fresh, conglomerate matrix is firm to hard and sandstone is hard. Where weathered, conglomerate matrix and sandstone are mostly firm, but soft within about 5 ft of ground surface. Clasts in conglomerate are hard; conglomerate breaks around clasts.

Bedding: Indistinct, shown only by medium to thick sandstone lenses that may be absent in intervals as thick as hundreds of feet.

Parting: Absent.

Fracture: In conglomerate, indistinct at wide to very wide (6-ft) spacing. In sandstone, at moderate to close spacing.

Permeability: Largely low intergranular permeability in bedrock, some very low where fresh, some possibly moderate below shallow rock. Most mantle moderate to low.

Weathering: Gradual color change from buff to gray at 15-30 ft, some buff color as deep as 50 ft.

Surficial mantle: Largely granular. Much free clay near ground surface; mantle is reddish stony clayey sand.

Expansivity: Bedrock unexpansive. Mantle unexpansive to significantly expansive. Sample NV5, soil, free swell 58 percent (exaggerated?). Mantle is uncracked.

Stratigraphic thickness: 1,300 ft (Weaver, 1949); 3,000 ft (M.C. Blake, Jr., oral commun., 1971).

Sources: M.C. Blake, Jr., oral commun., 1971; Blake and others, 1974; Weaver, 1949; two stations.

MAP UNIT 604

Geologic unit, (age), and location: Great Valley sequence, conglomerate unit (KJ), only in Mendocino highlands.

Summary: Near Healdsburg, largely conglomerate, some dirty sandstone and flysch of sandstone and siltstone. Near Duncans Mills, much flysch in addition to conglomerate and sandstone. Some mantle is significantly expansive.

Composition: In Healdsburg 15' quadrangle, unit includes: Conglomerate of well-rounded, hard pebbles and cobbles in clay- and silt-saturated sandstone matrix interbedded with scattered lenticular arkosic sandstone; very thick (100-ft or more) sequences of pebbly dirty arkosic sandstone; and very thick (100-ft) flysch sequences of fine-grained sandstone and siltstone. Here unit is largely (70 percent) massive conglomerate, some (15 percent?) pebbly sandstone, and some (15 percent?) medium bedded sandstone and siltstone. In Duncans Mills 7.5' quadrangle, in addition to conglomerate and sandstone lithologies, unit includes flysch sequences 300 ft or more in thickness that consist of interbedded medium-grained sandstone, fine-grained clayey sandstone, siltstone, mudstone, and minor shale. Here flysch makes up approximately 40 percent of unit.

Hardness: Where fresh, conglomerate matrix and sandstone interbeds are firm to hard; where weathered they are firm except some soft near ground surface. Clasts in conglomerate are fractured but hard, and conglomerate breaks around clasts. All other rock is firm both where fresh and weathered, except shale, mudstone, and some sandstone become soft to firm near ground surface.

Bedding: In massive conglomerate and pebbly sandstone, bedding is indistinct and revealed only by medium to thick interbeds that may be absent over intervals of hundreds of feet. Near Healdsburg, flysch sequences of sandstone and siltstone are repetitively interbedded at 2-8 in. Near Duncans Mills, flysch sequences are bedded mostly at 0.5-8 in., some beds as thick as 3 ft.

Parting: Absent in conglomerate and associated sandstone. In flysch sequences near Healdsburg, siltstone develops parting at very close spacing, sandstone at close spacing. Flysch sequences near Duncans Mills show parting at moderate spacing along bedding planes and at close to very close spacing within fine sandstone. Where weathered, fine sandstone and siltstone develop parallel parting, mudstone weathers spheroidally.

Fracture: In conglomerate, indistinct wide to very wide spacing; in associated sandstone, moderate to close spacing, some wide in more massive rock. In flysch sequences near Duncans Mills, close to very close spacing.

Permeability: Intergranular permeability of conglomerate and sandstone (most of unit) low to very low where fresh, largely low and possibly some moderate where weathered; of flysch (some of unit), low to very low, but most shallow flysch has low fracture permeability. Most mantle moderate, some low to very low.

Weathering: Massive sandstone and conglomerate are weathered to depths greater than 40 ft. In flysch sequences, sandstone is weathered to depths greater than 10 ft, adjacent finer grained rock to lesser depths.

Surficial mantle: Largely granular, some clayey. Soil on conglomerate is stony, sandy, and silty, little clay. Soil on flysch near Duncans Mills is sandy clay.

Expansivity: Most to almost all bedrock is unexpansive, some may be significantly expansive. Most mantle unexpansive, some significantly expansive. Samples: HL4, typical sand and silt soil on conglomerate, uncracked, free swell 45 percent; GY17, mildly cracked pebbly clay soil, free swell 57 percent; DM1, mildly cracked stony sandy slopewash, typical, free swell 44 percent; DM3, moderately cracked soil on mudstone, most expansive material seen, free swell 59 percent.

Sources: Blake and others, 1971; Gealey, 1951; 10 stations.

MAP UNIT 610

Geologic unit, (age), and location: Conglomerate in unnamed unit (TK), in Diablo Range east of Santa Clara Valley.

Summary: Not seen in field. Most is conglomerate and sandstone. See description of unit 641 for composition and physical properties.

Permeability: Intergranular permeability of most bedrock low, minor to some moderate; some to much is probably very low, but has low to locally moderate fracture permeability in shallow rock. Most mantle moderate.

Surficial mantle: Largely granular.

Expansivity: Most bedrock unexpansive. Most mantle unexpansive, some may be significantly expansive.

MAP UNIT 611

Geologic unit, (age), and location: Great Valley sequence, conglomerate unit (K), only in the East Bay Hills near Hayward.

Summary: Not seen in field. Dominant composition may be sandstone, but certainly much conglomerate. In places, conglomerate is well cemented and crops out. See unit 615.

Expression in aerial photographs: Intermediate topography that lacks ribbing, resistant relative to unit 644. In Castro Valley, forms bedrock knobs (cemented zones?).

Composition: Reported to consist of conglomerate, sandstone, and some "arenaceous shale" (Robinson, 1956). Conglomerate consists of pebbles, cobbles, and boulders, largely pebbles and cobbles, that are subrounded and poorly sorted, most (about 70 percent) hard (Case, 1968), in clayey sandstone matrix of which the sand is "fairly well rounded and sorted, with considerable clay and biotite" (Robinson, 1956). Some conglomerate is well cemented and crops out, most is not well cemented. Interbedded sandstone is as described for conglomerate matrix; apparently not much is cemented. Unit is probably largely sandstone, much conglomerate, some "arenaceous shale" (may be flysch).

Hardness: Conglomerate and sandstone are probably firm to hard, both where fresh and weathered. Shale firm. Clasts in conglomerate largely hard.

Bedding: Very thick (4-ft or more) beds, distinct.

Parting: Largely absent. Contacts between sandstone and conglomerate probably are not parting surfaces. Present in shale.

Permeability: Intergranular permeability in most of unit (sandstone and conglomerate) probably low to very low where fresh, largely low and possibly some moderate where weathered; in some(?) of unit (shale and cemented rock) very low, but this has low fracture permeability in shallow rock. Mantle probably largely moderate.

Weathering: Cemented rock hard to outcrop; most of unit weathered to unknown depth.

Surficial mantle: Probably largely granular. Robinson (1956) reported sandy soil over area; thus, probably sand or clayey sand soil similar to that on Cretaceous sandstone.

Expansivity: Probably most bedrock unexpansive, some may be significantly expansive (shale). Much(?) mantle unexpansive, much(?) significantly expansive, probably minor severely expansive. See samples for units 600-604 and 615.

Stratigraphic thickness: As much as 1,000 ft (Robinson, 1956).

Sources: Case, 1968; Robinson, 1956.

MAP UNIT 612

Geologic unit, (age), and location: Great Valley sequence, conglomerate unit (K), part of Del Valle Formation of Hall (1958), only on Sunol Ridge in the East Bay Hills and near Del Valle Reservoir south of Livermore Valley.

Summary: Not seen in field. Interbedded sandstone and conglomerate, unexpansive sandy mantle.

Expression in aerial photographs: Near Del Valle Reservoir, largely unexpressed in topography, but forms protruding sharp ridge in one place. On Sunol Ridge, expression is similar to adjacent unit 644.

Composition: Conglomerate and sandstone. Conglomerate consists of well-rounded to subrounded highly polished pebbles and cobbles that average 1-7 in. in diameter (Hall, 1958), 2-5 in. (Huey, 1948), in plentiful sandstone matrix (Huey, 1948), which is largely dirty and poorly sorted (Hall, 1958). Sandstone likewise is largely dirty and poorly sorted (Hall, 1958). Probably minor to some rock is calcite cemented.

Unit probably consists of much sandstone and much conglomerate. Huey (1948) reported 10-50 ft of conglomerate between sandstone in our mapped unit near Del Valle Reservoir that is about 200 ft thick.

Hardness: Sandstone matrix soft to hard (Hall, 1958).

Bedding: On Sunol Ridge, 50- to 100-ft beds of alternating sandstone and conglomerate (Hall, 1958). Near Del Valle Reservoir, 10- to 50-ft bed of conglomerate between sandstone (Huey, 1948).

Parting: Largely absent.

Permeability: Intergranular permeability of bedrock low to moderate, probably much of each; minor to some(?) very low, but this has low fracture permeability in shallow rock. Mantle moderate.

Surficial mantle: Granular. Pebbly sandy silty soil is typical.

Expansivity: Almost all bedrock and mantle is unexpansive.

Stratigraphic thickness: On Sunol Ridge, 600-700 ft (Hall, 1958); near Del Valle Reservoir, conglomerate is 10-50 ft thick (Huey, 1948) within thicker map unit.

Sources: Hall, 1958; Huey (1948) described only the area near Del Valle Reservoir.

MAP UNIT 613

Geologic unit, (age), and location: Strata of Stewarts Point (K), near Sonoma County coast.

Summary: Sandstone, conglomerate, and lesser mudstone. Most to almost all bedrock and mantle is unexpansive.

Composition: Sandstone, conglomerate, and lesser mudstone. Sandstone is typically medium to coarse grained and moderately sorted. Conglomerate is largely of cobbles and some boulders in sandstone matrix; clasts are siliceous porphyritic volcanic rock and siliceous fine-grained granitic rock. Mudstone generally occurs as minor interbeds. Unit probably consists of much sandstone, much conglomerate, minor to some mudstone.

Hardness: Fresh rock hard, moderately weathered rock firm to hard.

Bedding: Distinct, sandstone largely thick to very thick (10-15 ft?), locally thinner; conglomerate beds thick to very thick (40 ft?); mudstone interbeds probably mostly very thin to thin, some medium, but local intervals as thick as 200 ft.

Parting: Mudstone is not fissile.

Fracture: In rift valley, shattered at close to moderate spacing; elsewhere uncertain, probably wide to very wide spacing, locally moderate, in sandstone and conglomerate.

Permeability: Sandstone and conglomerate (most of unit) have very low to low intergranular permeability where fresh, probably low (to moderate?) where weathered. In rift valley, much shallow rock may have moderate fracture permeability. Mudstone (minor to some of unit) has very low intergranular permeability, low fracture permeability in shallow rock. Most to almost all mantle moderate.

Weathering: No observations of severely weathered rock, but probably firm to soft.

Surficial mantle: Most to almost all is granular.

Expansivity: Most to almost all bedrock and mantle unexpansive, minor to some probably significantly expansive. See sample for unit 666.

Stratigraphic thickness: 4,400 ft.

Sources: Blake and others, 1971; Wentworth, 1966; three stations.

MAP UNIT 614

Geologic unit, (age), and location: Redwood Canyon Formation, conglomerate member (K), in the East Bay Hills near Upper San Leandro Reservoir.

Summary: Not seen in field. Conglomerate and probably more abundant sandstone. Mantle largely granular. Ham (1952) reported that conglomerate forms topographic high.

Composition: Conglomerate and interbedded sandstone; unit as mapped is probably largely sandstone. Possibly minor siltstone and mudstone. General character probably similar to unit 615. Conglomerate consists of well-rounded cobbles and boulders, commonly as large as 2 ft in diameter, in matrix of coarse-grained, poorly sorted sand and silt. Conglomerate is firmly cemented by iron oxide and less commonly by

carbonate. Interbedded sandstone is probably medium to coarse grained and similar to sandstone in unit 630.

Hardness: Conglomerate clasts hard. Conglomerate is described as firmly cemented and requires blasting for quarrying; thus, probably most hard, some firm. Sandstone probably largely hard where fresh and weathered (see unit 630).

Bedding: Conglomerate occurs in lenticular beds that are probably thick to very thick (as much as 20 ft or more). Sandstone beds probably medium to very thick (as much as 50 ft or more). Mudstone and siltstone, if present, largely thin to thick.

Parting: Probably largely absent.

Fracture: In conglomerate, spacing probably wide to very wide (as much as 5 ft or more); in sandstone, probably some close to moderate, largely wide to 6 ft.

Permeability: Intergranular permeability of bedrock largely low to very low, possibly some moderate to high; most bedrock probably has low total permeability in shallow rock. Most mantle moderate.

Surficial mantle: Largely granular.

Expansivity: Almost all bedrock unexpansive. Almost all mantle unexpansive to significantly expansive. See samples for unit 630.

Stratigraphic thickness: Ham (1952) reported maximum thickness of 50 ft; our unit shows outcrop width of as much as 600 ft.

Source: Ham, 1952.

MAP UNIT 615

Geologic unit, (age), and location: Oakland Conglomerate (K), in the East Bay Hills near Oakland.

Summary: Conglomerate, interbedded with sandstone and minor shale. No blasting anticipated by Radbruch (1969). Bedrock and most mantle unexpansive.

Composition: Conglomerate, interbedded with sandstone and minor shale especially near top of section. Conglomerate consists of hard, well-rounded and polished pebbles, cobbles, and less commonly boulders as much as 18 in. long, most 1-8 in. Matrix is largely medium- to coarse-grained sandstone that is poorly sorted and ranges from clay- and silt-saturated to undersaturated; some matrix is fairly clean. Rock breaks around cobbles. Interbedded sandstone is like conglomerate matrix and consists of fine- to coarse-grained sand in silt and clay matrix. Unit probably includes much of both conglomerate and sandstone.

Hardness: Weathered conglomerate has hard clasts, firm matrix. Sandstone probably firm to hard where fresh and weathered.

Bedding: Conglomerate occurs as lenticular, distinct medium to very thick (as much as 25-ft or more) beds, most very thick (as much as 10 ft), interbedded with sandstone in medium to very thick (as much as 50-ft or more) beds. Shale thin to thick. See section by Case (1963).

Parting: Largely absent, locally present at shale or fine-grained sandstone interbeds.

Fracture: None observed. Probably wide to very wide in conglomerate, similar to unit 603. Rock breaks around cobbles; many cobbles fractured internally. Sandstone probably fractured largely at close to wide spacing, similar to other Cretaceous sandstone.

Permeability: Intergranular permeability of bedrock largely low, some moderate, some very low (cemented rock). Most to almost all mantle moderate.

Weathering: To depths greater than 30 ft; Radbruch (1969) reported that weathering extends as deep as 20 ft.

Surficial mantle: Most to almost all is granular. Radbruch (1969) reported that soil is generally sparse or absent. Mostly uncracked sandy and silty soil.

Expansivity: Almost all bedrock unexpansive. Most mantle unexpansive, some probably significantly expansive. Sample OE40, typical uncracked pebbly granular soil, free swell 43 percent.

Stratigraphic thickness: 200-2,000 ft, average about 900 ft (Case, 1968).

Sources: Case, 1963, 1968; Lawson, 1914; Radbruch, 1969; two stations.

MAP UNIT 616

Geologic unit, (age), and location: Conglomerate (KJ), in the East Bay Hills near Hayward.

Summary: Probably much conglomerate, much sandstone, minor shale. Most mantle unexpansive to significantly expansive.

Expression in aerial photographs: Narrow band of resistant intermediate topography that lacks ribbing. Largely light tone. Some banding evident, may be traces of Hayward fault. Includes boldly outcropping bluffs in places.

Composition: (1) Conglomerate, much poorly sorted, of subrounded pebbles and cobbles in largely poorly sorted matrix of either shale or dirty, low permeability sandstone. Some crops out. (2) Sandstone as described for unit 635, much of which may be pebbly. (3) Shale. Proportions unknown; probably much conglomerate, much sandstone, minor shale.

Hardness: Clasts in conglomerate largely hard. Sandy conglomerate matrix is hard to firm where fresh, weathers firm; shale matrix probably similar. Sandstone hard where fresh, hard to firm where weathered.

Bedding: Distinct thick to very thick (as much as nearly 50-ft) beds of conglomerate and sandstone. Robinson (1956) reported thick to very thick (4-ft) pebbly sandstone interbedded with conglomerate and shale.

Parting: Largely absent, including at distinct contacts between sandstone and conglomerate.

Fracture: Spacing in conglomerate is moderate to very wide (4 ft or more), largely wide. Sandstone has close to moderate spacing.

Permeability: Intergranular permeability of bedrock low to very low where fresh. Where weathered, largely low; minor to some is very low, but has low fracture permeability in shallow rock. Most mantle moderate.

Weathering: Conglomerate matrix weathered firm to depth of about 20 ft.

Surficial mantle: Largely granular. Typical soil consits of sand, silt, and pebbles; some is clayey sand or sandy clay.

Expansivity: Almost all bedrock unexpansive. Most mantle unexpansive to significantly expansive. Samples: NWK2, very mildly cracked granular soil and slopewash, typical, free swell 51 percent; NL21, very mildly cracked granular soil, typical at this station, free swell 66 percent (exaggerated?).

Sources: Robinson, 1956; three stations.

MAP UNIT 620

Geologic unit, (age), and location: Mapped sandstone in unnamed unit (TK), in Diablo Range east of Santa Clara Valley.

Summary: Largely sandstone, some mudstone. See description of unit 641 for composition and physical properties.

Permeability: Intergranular permeability of bedrock largely low, minor to possibly some moderate; some to much is very low, but has low to locally moderate fracture permeability in shallow rock. Most mantle moderate, probably some low.

Surficial mantle: Largely granular.

Expansivity: Most bedrock and mantle are unexpansive, some of each may be significantly expansive.

MAP UNIT 621

Geologic unit, (age), and location: Great Valley sequence, predominantly sandstone unit in unnamed sandstone and shale (K), near Mount Diablo.

Summary: Sandstone makes up 50-80 percent or more of unit, the remainder being mudstone intervals. Much sandstone approaches moderate intergranular permeability. Sandstone beds largely medium to 6 ft. Mantle is clayey sand; most is unexpansive to significantly expansive.

Expression in aerial photographs: Mostly forms sharp, dramatic hogback that shows some ribbing; hard topography. Sandstone bands are as wide as 50 ft, most as wide as 30 ft, one as wide as 200 ft at edge of

hogback, between dark-toned bands of similar or lesser width. Includes some lumpy intermediate topography, largely light in tone, on crest.

Composition: (1) Sandstone, wacke to arenite (Colburn, 1964), largely medium grained, moderately well sorted, flakes somewhat where extremely weathered. Includes calcite-cemented concretions. (2) Mudstone intervals, consisting of interbedded mudstone and siltstone, lesser shale (weathers fissile). Unit is 50-80 percent or more sandstone. Mudstone intervals consist of much of both mudstone and siltstone, lesser shale.

Hardness: Sandstone is largely quite firm to hard where weathered, probably similar where fresh; ringing hard where calcite cemented. Most mudstone is firm and siltstone hard, where fresh and weathered.

Bedding: Distinct. Varies from (a) largely medium to 8-ft sandstone beds between medium to 4-ft mudstone intervals to (b) very thick bedded (10- to 30-ft or more) sandstone broken by very thin partings into medium to thick beds. On photographs, zones of dominant sandstone as thick as 30 ft, one as thick as 200 ft, between mudstone intervals of similar thickness. Mudstone intervals 50 ft or more in thickness observed in field. Mudstone intervals are very thin to medium bedded, indistinctly to distinctly. Much sandstone in beds to thick is laminated and shows parting.

Parting: Present at distinct bedding planes (largely moderate to 4 ft, but as much as 6 ft); within medium to thick laminated sandstone beds at close spacing; and within mudstone intervals mostly at close to very close spacing, some moderate. Some rock in mudstone intervals is fissile where weathered, most is not.

Fracture: In sandstone, spacing ranges from moderate to 6 ft, most moderate or wide to 4 ft; spacing ranges from similar to bed thickness to greater than bed thickness by one-half. Concretions as large as 6 ft in diameter. Close to very close spacing of weathering fracture in mudstone intervals.

Permeability: Intergranular permeability of sandstone (most of unit) largely low, much approaching moderate, possibly some very low where fresh; of mudstone intervals (some to much of unit) very low to low, but most have low fracture permeability in shallow rock. Some springs reported. Mantle largely moderate, some to much low to very low.

Weathering: Sandstone weathered to depths greater than 25 ft, probably 25-35 ft. In mudstone intervals, some rock weathers fissile, most does not.

Surficial mantle: Largely granular. Clayey sand soil and subsoil.

Expansivity: Most bedrock unexpansive, some to much expansive. Much mantle significantly expansive, much unexpansive, probably minor to some severely expansive. Soil and subsoil very mildly cracked. Sample BHS10, reddish clayey sand subsoil, typical, free swell 58 percent (exaggerated). Mantle is similar to sample AS40, clayey sand soil on unit 652, very mildly cracked, typical, free swell 70 percent (exaggerated).

Sources: Briggs, 1953b; Colburn, 1962, 1964; two stations.

MAP UNIT 622

Geologic unit, (age), and location: Great Valley sequence, predominantly sandstone unit (K), only in the East Bay Hills near Martinez and east of Livermore Valley near Tesla.

Summary: Largely sandstone, probably some to much mudstone. Exposure near Tesla not seen in field, described as "principally massive and concretionary sandstone with minor amounts of shale" (Huey, 1948). Specifics of description below apply only to area near Martinez. Materials near Tesla are similar to those described below and to unit 621.

Expression in aerial photographs: Near Martinez, resistant unit that is not thick enough to form distinctive topography.

Composition: (1) Relatively clean sandstone that is medium to some coarse grained, moderately to poorly sorted, interstices filled to nearly filled by silt and clay. (2) Fine- to medium-grained, high-matrix sandstone, some approaching poorly sorted sandy siltstone, interbedded with less abundant, fine-grained, well-sorted to moderately well sorted sandstone that is micaceous. (3) Mudstone, siltstone, and shale, much containing thin sandstone interbeds. (4) Concretions.

In exposed 100 ft out of about 300-ft section near Martinez, 70 percent is composition 1, 30 percent composition 2. Unexposed 200 ft of section underlies less resistant hillside approaching a drainage and is probably made up of compositions 2 and 3. Near both Martinez and Tesla, unit is probably largely sandstone (compositions 1 and 2), some to much mudstone (composition 3), probably minor concretions.

Hardness: Very thick beds of relatively clean sandstone are firm approaching hard where weathered; interbedded high-matrix sandstone sequences are firm where fresh and weathered. Mudstone has firm pieces.

Bedding: Exposure near Martinez has very thick (20- to 40-ft) beds of relatively clean sandstone (composition 1) between intervals of thick to very thick (6-ft) interbedded high-matrix sandstone (composition 2). All beds distinct.

Parting: Observed only on bedding planes. In mudstone, probably close to very close spacing, some moderate.

Fracture: Moderate to wide spacing, some as much as 5 ft, in very thick bedded relatively clean sandstone. Interbedded high-matrix sandstone has moderate to wide original spacing and much has close to very close spacing of weathering fracture. Mudstone intervals are probably similar to high-matrix sandstone except all has weathering fracture.

Permeability: Intergranular permeability largely low in sandstone, some approaching moderate, probably some very low where fresh; very low in mudstone, but much shallow mudstone has low fracture permeability; very low in cemented rock. Thus, intergranular permeability of bedrock largely low, probably some moderate, some to much very low; some low fracture permeability in shallow bedrock. Most mantle moderate, some to much low to very low.

Weathering: Very thick sandstone weathered to depths greater than 30-40 ft. High-matrix sandstone in interbedded intervals is partly fresh (away from fractures) at depths of about 25-30 ft.

Surficial mantle: Largely granular. Clayey and silty sand soils.

Expansivity: Probably most bedrock is unexpansive, some to much expansive. Probably most mantle unexpansive to significantly expansive, some may be severely expansive. See samples for units 621 and 683.

Sources: Briggs, 1953b; Huey, 1948; Lawson, 1914; one station.

MAP UNIT 623

Geologic unit, (age), and location: Great Valley sequence, sandstone unit (K), only in Diablo Range south of Sunol Valley.

Summary: Briefly seen in field. Unit is a northward extension of unit 660, but is distinguished from unit 664, which also is a northward extension of unit 660. Assume unit to be largely sandstone, as in unit 626, but some to much shale, mudstone, and siltstone interbeds. Bedrock and mantle are probably largely unexpansive.

Expression in aerial photographs: Mostly intermediate topography, some hard; most is ribbed, but crests vary in rounding.

Composition: Fine- to coarse-grained sandstone that contains more than 10 percent clay, about 5 percent biotite, and some carbonaceous material; well-indurated, calcite cement not as common as silica and clay cement (Hall, 1958). Lesser mudstone, shale, and siltstone interbeds. Unit is probably largely sandstone, some calcite cemented; some to much mudstone, shale, and siltstone.

Hardness: Sandstone is hard to firm where fresh and weathered. Interbedded clayey rock has hard to firm pieces.

Bedding: Distinct, medium to very thick (25-ft) sandstone beds between clayey interbeds of similar thickness.

Parting: At distinct bedding planes (moderate to very wide spacing). Also within some to much very thick sandstone, but some to most very thick sandstone retains spacing greater than 10 ft.

Fracture: Most sandstone beds less than 6 ft in thickness have close to wide spacing, but beds thicker than 6 ft have much very wide spacing

(as wide as 5 ft, some as wide as 10 ft). Interbedded clayey rock has weathering fracture at close to very close spacing.

Permeability: Intergranular permeability of most sandstone low, cemented sandstone and mudstone very low; thus, much bedrock low, much very low. Low fracture permeability in most shallow mudstone, low to locally moderate in shallow cemented sandstone. Probably most mantle moderate, some to much low to very low.

Weathering: Sandstone is generally weathered to depth of about 30 ft, some to only 10 ft, some crops out fresh or nearly fresh.

Surficial mantle: Probably largely granular, some to much clayey. Typically sandy soil similar to that on Cretaceous sandstone.

Expansivity: Probably most bedrock unexpansive, some may be expansive. Probably most mantle unexpansive, some to much significantly expansive, minor to some severely expansive.

Sources: Hall, 1958; one station.

MAP UNIT 624

Geologic unit, (age), and location: Great Valley sequence, sandstone and shale unit (K), only near Crockett at north end of the East Bay Hills.

Summary: Sandstone in very thick (25- to 60-ft) beds between very thick (30- to 50-ft) intervals of thin to thickly interbedded mudstone and sandstone; occurs as fault-bounded slice along Franklin fault. Surprisingly soft fresh sandstone. Most bedrock and mantle is unexpansive.

Composition: Sandstone is poorly sorted, fine to coarse grained, mostly fine to medium grained, much clean, some silty; looks different in different exposures. Contains calcite- and limonite-cemented concretions as large as 4 ft spheroids or elongate thick concretions as much as 10 ft in length. Interbedded material is mudstone. Thin to thick beds of sandstone interbedded with mudstone are silty and fine grained. Unit is largely sandstone, some to much mudstone.

Hardness: Sandstone soft where fresh in deep freeway cut, firm where weathered. Mudstone has firm pieces, nearly soft. Concretions in sandstone are hard.

Bedding: Distinct very thick (25- to 60-ft) beds of sandstone between very thick (30- to 50-ft) intervals of thin to thickly interbedded sandstone and mudstone.

Parting: At contacts between sandstone and mudstone.

Fracture: In sandstone, wide spacing where weathered, absent where fresh. Mudstone fractured at close to very close spacing. Some large concretions fractured at moderate to wide spacing.

Permeability: Intergranular permeability of sandstone (most of unit) low to high, low where weathered, moderate to high where fresh; of mudstone (some to much of unit) largely very low. Probably most mudstone has low fracture permeability in shallow rock. Most mantle moderate.

Weathering: Sandstone weathered to depths greater than 50 ft.

Surficial mantle: Largely granular.

Expansivity: Most bedrock unexpansive, some to much (mudstone) may be expansive. Most mantle unexpansive. No samples, no evidence of expansivity.

Sources: Two stations.

MAP UNIT 625

Geologic unit, (age), and location: Great Valley sequence, predominantly sandstone unit (K), only in the Santa Teresa Hills south of San Jose.

Summary: Largely sandstone, most in very thick beds; case hardens from firm internally to quite firm on surface, thus difficult to excavate. Used for building stone (dimension stone) at Stanford University and elsewhere. Much has moderate intergranular permeability. Most bedrock and mantle unexpansive.

Expression in aerial photographs: Resistant intermediate topography, largely smooth and lacking ribbing; steep brush-covered slopes and some large areas of bold outcrop.

Composition: (1) Sandstone, largely medium to coarse grained, ranging from fine to coarse grained, much including scattered very coarse grains, somewhat silty (less than 5 percent), moderately to moderately well sorted. According to Bailey and Everhart (1964), rock is arkosic sandstone of 50-75 percent quartz and as much as 30 percent feldspar, uniform, homogeneous, most grains subangular, containing iron oxide and clay cement in small amounts. Sandstone case hardens because of concentration of iron oxide in surficial 1 in. of rock (Bailey and Everhart, 1964). Sandstone is calcite cemented in some places and pebbly in places. (2) Interbeds of shale, mudstone, siltstone, and high-matrix very fine grained sandstone. Unit is probably largely sandstone, some clayey interbeds; locally dominant clayey rock.

Hardness: Where weathered, sandstone is firm approaching hard on case hardened surface, firm and nearly friable inside; all of sandstone probably firm fresh. Calcite-cemented sandstone is hard. Clayey rock firm where fresh and weathered.

Bedding: Distinct, broadly lenticular sandstone beds range from medium to more than 20 ft in thickness, most beds probably less than 8 ft thick, between very thin to medium or thicker clayey interbeds, zones of shale chips, or pebbly layers. Some intervals as thick as 50 ft or more consist of almost entirely sandstone in 20-ft beds; some zones of medium to thick sandstone are interbedded with some clayey rock.

Parting: Present on distinct bedding planes and within some clayey interbeds. No parting on pebbly layers.

Fracture: In very thick sandstone, major fractures or joints have spacing of 4-12 ft, 8 ft or more according to Bailey and Everhart (1964); these are about perpendicular to bedding and regular in orientation (rectilinear). Spacing of fractures between major joints ranges from moderate to 12 ft, most wide to 4 ft. Sandstone in beds to thick have moderate to wide spacing. Clayey interbeds have close to very close spacing of weathering fracture. Some joint-defined blocks as large as 40 ft in diameter. Large and very large blocks occupy ground surface in many parts of unit.

Permeability: Sandstone has low to moderate intergranular permeability, clayey rock low to very low; thus, probably much bedrock moderate, much low, minor to some very low. Much shallow clayey rock has low fracture permeability. Bedrock of unit was noted as permeable by California State Water Resources Board (1955); some wells yield 15-40 gal/min from fresh sandstone. Most mantle moderate.

Weathering: Sandstone is weathered to depths greater than 50 ft, greater than 30 ft according to Bailey and Everhart (1964). Case hardens, many outcrops.

Surficial mantle: Largely granular. Uncracked sand soil observed over most of unit.

Expansivity: Most bedrock and mantle unexpansive, some of each may be expansive. See unit 661.

Stratigraphic thickness: Thickness of Great Valley sequence (including unit 661) 1,200 ft or more (Bailey and Everhart, 1964).

Sources: Bailey and Everhart, 1964; California State Water Resources Board, 1955; Davis and Jennings, 1954; four stations.

MAP UNIT 626

Geologic unit, (age), and location: Great Valley sequence, predominantly sandstone unit (K), only in Diablo Range south from Calaveras Reservoir.

Summary: Bodies of dominant sandstone within and adjacent to unit 660. Most is sandstone; some interbeds of mudstone, shale, flysch, and clayey sandstone. Most bedrock and mantle unexpansive.

Expression in aerial photographs: No continuous expression in most places. In places, forms resistant intermediate topography of prominent massive bumps that largely lack ribbing.

Composition: Sandstone, arkosic, fine to coarse grained, mostly medium grained, some or more is poorly sorted and has angular grains (Crittenden, 1951); some to much is cemented by calcite or brown carbonate. Sandstone may have abundant biotite and may include conglomerate,

pebble to boulder, in places (Gilbert, 1943). Brown wrinkled biotite is conspicuous and typical (Crittenden, 1951). Sandstone is interbedded with lesser clayey rock that includes mudstone, shale, and flysch similar to unit 660 and clayey sandstone. Unit is largely sandstone, in places almost all sandstone, but in places includes as much as 50 percent interbedded clayey rock.

Hardness: Sandstone is hard where fresh, especially hard where cemented; hard to firm, much quite firm, where weathered. Interbedded clayey rock has firm to hard pieces.

Bedding: Distinct sandstone beds, variable in thickness from mostly medium and thick in some areas to thick and very thick (as much as 50 ft) in other areas, even within single mapped body. Intervals of clayey rock are mostly thin to thick, some very thick.

Parting: Present at bedding planes, moderate to very wide (as much as 50-ft) spacing, and within some sandstone at close spacing. Mostly present at close to moderate spacing in interbedded clayey rock.

Fracture: Variable in sandstone, ranging from close to very wide (10-ft) spacing; related to bed thickness in that beds thicker than 6 ft have much very wide spacing. Most sandstone has close to wide spacing except where beds are thicker than 6 ft. Clayey interbedded rock generally has weathering fracture at close to very close spacing.

Permeability: Sandstone (most of unit) has largely low intergranular permeability, very low where calcite cemented, much very low where fresh; fracture permeability low to possibly moderate in shallow cemented rock. Mudstone (some of unit) has very low intergranular permeability, much has low fracture permeability in shallow rock. Most mantle moderate, some low to very low.

Weathering: Some sandstone crops out fresh or nearly fresh, other sandstone is weathered to depths greater than 8 ft and is firm. Weathering makes little difference in hardness of most sandstone in this unit.

Surficial mantle: Largely granular, some clayey (sandy clay).

Expansivity: Most bedrock unexpansive, some significantly expansive. Most mantle unexpansive, some significantly expansive, possibly minor severely expansive. Soil is generally less expansive than that of adjacent unit 660 and unit 641. No samples.

Sources: Crittenden, 1951; Gilbert, 1943; four stations.

MAP UNIT 627

Geologic unit, (age), and location: Great Valley sequence, sandstone unit (K), only east of Martinez in vicinity of Concord. Includes lower part of Vine Hill Sandstone of Weaver (1953).

Summary: Includes much of both very firm, low permeability sandstone, much in very thick beds, and firm silty sandstone to sandy siltstone; minor to some shale and mudstone. Most mantle unexpansive to significantly expansive.

Expression in aerial photographs: Contrasting expression; in places sharp hard ridge, in other places swale topography.

Composition: (1) Sandstone, fine to medium grained, moderately to moderately well sorted, at least in part probably tuffaceous, containing scattered to abundant concretions. (2) High-matrix, silty, very fine grained sandstone that grades to sandy siltstone, scales where weathered. (3) Shale and mudstone. Exposures are largely sandstone (composition 1); covered areas are less resistant rock, probably largely silty sandstone (composition 2) and minor to some mudstone and shale (as in unit 665). No mudstone or shale noted in field; minor shale in section by Weaver (1953).

Hardness: Where weathered and probably where fresh, sandstone is good and firm or quite firm, some looks really tough; no evidence of blasting, but looks difficult to rip. Silty sandstone is firm where fresh and weathered. Concretions are hard.

Bedding: Distinct. Sandstone (composition 1) occurs both as very thick beds (as much as 40 ft or more) and as thick to very thick (10-ft) beds, mostly about 6 ft, between thin to medium interbeds. Silty sandstone (composition 2) occurs in unbedded intervals tens of feet thick; Weaver shows some bedding at 10- to 150-ft intervals. Concretions large to 4 ft in diameter.

Parting: Present only at distinct bedding planes, except a couple of partings within one very thick (40-ft) sandstone bed.

Fracture: In sandstone (composition 1), largely wide to moderate spacing, some very wide (5 ft). Silty sandstone (composition 2) has close to moderate spacing. Many fractures in sandstone are tight.

Permeability: Intergranular permeability of sandstone (composition 1) low to possibly some moderate, silty sandstone (composition 2) low to very low, mudstone and shale very low. Thus, intergranular permeability of most bedrock low, possibly some moderate, some very low. Most mantle moderate.

Weathering: Sandstone is weathered to buff color to depths of more than 25 ft, mostly to depths of more than 30 ft. In silty sandstone, color change from buff to dark gray occurs as deep as 15-25 ft.

Surficial mantle: Largely granular.

Expansivity: Bedrock probably largely unexpansive, minor to some may be expansive. Most mantle unexpansive to significantly expansive. Sample PC14, sandy silt soil, probably typical, free swell 50 percent (exaggerated).

Sources: Weaver, 1953; three stations.

MAP UNIT 628

Geologic unit, (age), and location: Deer Valley Formation of Colburn (1964) (K), east of Mount Diablo.

Summary: Most is clean to silty sandstone, some clayey sandstone. Much is very thick bedded (10 ft or more), much thin to thickly bedded and (or) parted. In places, hard concretions as large as 10 ft in diameter and cemented beds to thick or more. Clean sandstone has moderate intergranular permeability. Some mantle severely expansive.

Expression in aerial photographs: Near Byron, fairly resistant intermediate topography that lacks good ribbing; some faint crude banding, consisting of 300-ft light tone, 200-ft dark tone, 200-ft light tone; no fine bands. Near Briones Valley, forms ridge having one to two crests. Where one crest, forms hard, ribbed topography. Where two crests, becomes more subdued and has intermediate approaching hard crest and flanks that lack ribs or are subtly ribbed; banded by light-toned zones as wide as 50 ft, dark-toned zones as wide as 30 ft, little contrast in resistance, largely (70 percent) light in tone. Where two crests, unit includes valley between crests, which is a nonresistant interval about 200 ft in width.

Composition: (1) Medium- to coarse-grained clean quartz arenite; reported to constitute most of unit (Colburn, 1964). (2) Clean fine- to medium-grained sandstone of moderate permeability. (3) Silty fine- to medium-grained sandstone of low permeability. (4) Clayey and tuffaceous fine- to medium-grained sandstone; tuffaceous component is matrix. (5) Interbeds of siltstone, mudstone, and clayey very fine grained sandstone. (6) Calcite-cemented beds and concretions in sandstone. (7) Pebble and cobble conglomerate of well-rounded hard clasts, near middle of section (Colburn, 1964). (8) Scattered beds containing pebbles and molluscs (Colburn, 1964).

Proportions are uncertain, because of report by Colburn (1964) that most of unit is massive clean sandstone. Probably exposures are largely clean sandstone, but exposures are poor in this unit. From field observations, soils, and expression in aerial photographs, we infer that unit consists of about 70 percent clean and silty sandstone of compositions 1-3 (probably 20-30 percent clean sandstone of compositions 1 and 2, 40-50 percent silty sandstone of composition 3); remaining 30 percent of unit is probably largely clayey sandstone of composition 4. Minor siltstone interbeds (composition 5), minor conglomerate and mollusc beds (compositions 7, 8), and minor to locally some concretions and cemented beds (composition 6).

Hardness: Clean sandstone is firm, some soft, where weathered, probably firm where fresh, but contains hard to quite firm calcite-cemented zones and concretions. Silty and clayey sandstone firm where weathered and

probably where fresh. Siltstone intervals (composition 5) firm. Conglomerate has hard clasts (Colburn, 1964) in probably firm matrix.

Bedding: Distinct to indistinct beds. Clean and silty sandstone probably occur largely in very thick (10- to more than 20-ft) beds between probably largely very thick clayey sandstone and lesser siltstone intervals to thick. Some to most clean and silty sandstone occurs in medium to thick distinct beds between minor siltstone interbeds or is fractured parallel to bedding (along indistinct bedding or crossbedding?) at close spacing. Some intervals of dominant clayey sandstone, possibly including siltstone intervals, are as thick as 200 ft. Most concretions are less than 4 ft in diameter, some as large as 10 ft; cemented sandstone beds to thick or more. Conglomerate occurs as 30-ft bed of 500-ft lateral extent near middle of section; pebble and mollusc beds to medium.

Parting: Absent or at very wide (more than 10-ft) spacing in most of unit (where very thick clean and silty sandstone is distinctly to indistinctly interbedded with very thick clayey sandstone), but some to most clean and silty sandstone has close to wide spacing (where beds are medium to thick and where fracture is close spaced parallel to bedding).

Fracture: Most sandstone in weathered zone has close to moderate spacing, but very thick beds have indistinct fracture at spacing as great as 4 ft. Much sandstone near the ground surface develops sheeting parallel to the ground surface at close to moderate spacing. Most concretions and cemented sandstone have moderate to wide spacing, probably some very wide.

Permeability: Intergranular permeability of clean sandstone moderate, silty sandstone low, clayey sandstone low to very low, siltstone interbeds low to very low, cemented rock very low. Thus, some bedrock has moderate intergranular permeability, most low, some very low. Probably low fracture permeability in shallow clayey sandstone, siltstone interbeds, and cemented rock. Much to most mantle moderate, some to much very low to low.

Weathering: Cemented beds, concretions, and some firm rock on ridges crop out; uncemented clean sandstone weathers deeply (probably more than 20 ft); clayey sandstone probably develops weathering fracture; much silty sandstone develops sheeting parallel to ground surface.

Surficial mantle: Much to most granular, some to much clayey. At one location in northern part of unit, about equally abundant sandy silt soil (sample AS31A) and brown sandy clay soil (sample AS31B), the silty soil occurring in high ground, the clayey soil in low ground. Farther south, most mantle is clayey sand and less than 20 percent is similar to sample BHS24, a silty and sandy clay soil.

Expansivity: Almost all bedrock unexpansive. Much to most mantle unexpansive, some to much significantly expansive, some severely expansive. Samples: AS31A, sandy silt soil, free swell 49 percent (exaggerated); AS31B, well-cracked sandy clay soil, free swell 103 percent; farther south most soil is uncracked to very mildly cracked, and less than 20 percent is similar to sample BHS24, mildly cracked silty and sandy clay soil, more expansive than most, free swell 65 percent.

Stratigraphic thickness: 50-500 ft (Brabb and others, 1971); 50-800 ft (Colburn, 1964).

Sources: Brabb and others, 1971; Briggs, 1953b; Colburn, 1961, 1964; three stations.

MAP UNIT 629

Geologic unit, (age), and location: Moreno Formation, mappable sandstone in lower member (K), east of Mount Diablo.

Summary: Not seen in field. Consists of resistant sandstone interbeds in unit 673 that stand up out of subdued topography; include some to much mudstone, shale, and siltstone. Character of rock is inferred from sandstone bodies observed in unit 673 and from aerial photographs. Most bedrock and mantle unexpansive, some to much of each expansive.

Expression in aerial photographs: Resistant intermediate bands through less resistant topography. Width of apparent sandstone bodies in many cases is about half that shown on map. Includes cemented beds (white photographic tone) as wide as 10-20 ft.

Composition: (1) Sandstone, probably medium- to coarse-grained arenite, moderately to moderately well sorted, as described for units 672 and 673; some is calcite cemented as beds and concretions. (2) Mudstone, shale, and siltstone, as in unit 673, some of which may be somewhat siliceous (Anderson and Pack, 1915). Unit probably is largely sandstone, some to much clayey rock.

Hardness: Sandstone probably largely firm where fresh and weathered, some hard where calcite cemented. Clayey rock firm where fresh and weathered.

Bedding: Range in thickness probably is similar to unit 673, which includes both very thick (as much as 30-ft or more) sandstone beds and medium to thick sandstone interbedded with clayey rock. In this unit (629), most sandstone probably is very thick bedded. Distinct bedding contacts. Cemented beds as thick as 10-20 ft.

Parting: Spacing probably at very wide and wide in sandstone, very close to moderate in clayey rock.

Fracture: In sandstone, probably largely moderate to wide spacing, ranging from close to 4 ft or more. Clayey rock has close to very close spacing of weathering fracture on moderate to wide original spacing.

Permeability: Intergranular permeability of much sandstone probably moderate, much low, some very low (where cemented); very low in clayey rock. Thus, intergranular permeability of probably much bedrock low, some to much moderate, some to much very low. Shallow cemented rock and probably some shallow clayey rock have low fracture permeability. Probably most mantle moderate, some to much very low to low.

Surficial mantle: Probably largely granular, some to much clayey. Probably most soils consist of sand and silt, but some to much dark clayey subsoil and soil, such as samples AS33B and AS34 of unit 673, are present near contacts with adjacent units.

Expansivity: Most bedrock unexpansive, probably some to much expansive. Most mantle unexpansive to possibly significantly expansive, probably some to much severely expansive. See samples for units 672 and 673.

Sources: Anderson and Pack, 1915; Briggs, 1953b; Colburn, 1961, 1964; Payne, 1951, 1960; Snow, 1957.

MAP UNIT 630

Geologic unit, (age), and location: Redwood Canyon Formation (K), in the East Bay Hills east of Oakland.

Summary: Largely hard sandstone in thick to very thick beds; less abundant interbeds of laminated sandstone, siltstone, and mudstone. Radbruch (1969) reported that blasting may be required in places. Minor to some severely expansive bedrock and mantle.

Expression in aerial photographs: Largely hard, regularly ribbed topography; some intermediate crests suggest clayey rock or old erosional surfaces.

Composition: Largely sandstone; some interbedded laminated sandstone, siltstone, mudstone, and lesser shale. Sandstone is fine to coarse grained, largely fine to medium grained, moderately well sorted, contains abundant biotite, and contains sufficient fines to have low intergranular permeability. Ham (1952) reported that matrix of sandstone is mixture of clayey material and carbonate. Sandstone contains hard spherical calcareous concretions to large. Mudstone in places contains limestone nodules and zones of argillaceous limestone.

Hardness: In most thick beds and all very thick beds, sandstone is hard where fresh and weathered (much is dented slightly by geologic hammer and is borderline between hard and firm); in thin to medium and some thick beds, sandstone is firm where fresh and weathered. Concretions are ringing hard. Laminated sandstone, siltstone, and mudstone have firm pieces where fresh and weathered, firm to soft rock mass. Radbruch (1969) reported that weathered rock is firm to soft.

Bedding: Distinct and regular. Sandstone beds are medium to very thick (as much as 40 ft or more), mostly thick to very thick (10 ft), between thin to very thick (generally as much as 5-ft, but as much as 10-ft or more) intervals of laminated sandstone, siltstone, and mudstone. Many sandstone beds are thinly crossbedded. Lenses of shale and mudstone as thick as 200 ft were mapped by Case (1968).

Parting: Good parting at bedding contacts and within laminated sandstone, siltstone, and mudstone at very close to moderate spacing; close to very close spacing within shale. Absent within sandstone.

Fracture: Medium to thick sandstone beds are fractured generally at spacing closer than bed thickness, rarely at spacing wider than bed thickness. Very thick sandstone is fractured mostly at wide to very wide (as much as 6-ft) spacing, but some very thick sandstone has close to moderate spacing. Fractures continue through laminated sandstone, siltstone, and mudstone from adjacent sandstone, but these interbed materials also have close to very close spacing of weathering fracture.

Permeability: Intergranular permeability of sandstone, laminated sandstone, and siltstone largely low, much very low where fresh; mudstone and shale very low. Thus, intergranular permeability of fresh bedrock low to very low; of almost all weathered bedrock low, minor to some very low. Fracture permeability locally moderate in shallow sandstone. Most mantle moderate, some low to very low.

Weathering: Sandstone is weathered to depth of about 30 ft, from fractures inward. Interbed materials probably weathered to depths of 10-30 ft.

Surficial mantle: Most to almost all granular. Typical soil is sandy and silty, such as sample OE31. Soil is sparse and generally less than 1 ft thick (Radbruch, 1969).

Expansivity: Most bedrock is unexpansive, minor to some severely expansive (mudstone). Most mantle unexpansive to significantly expansive, minor to some severely expansive. Samples: OE30, mildly cracked weathered mudstone, free swell 89 percent; OE31, uncracked to very mildly cracked sandy silty soil, typical, free swell 62 percent.

Stratigraphic thickness: Probably 1,700-2,000 ft (Radbruch, 1969).

Sources: Case, 1968; Ham, 1952; Radbruch, 1969; three stations.

MAP UNIT 631

Geologic unit, (age), and location: Great Valley sequence, predominantly sandstone unit (K) correlative with F-2 zone of Goudkoff (1942), only north and east of Livermore Valley.

Summary: Probably most is sandstone intervals, much flysch. Most mantle expansive.

Expression in aerial photographs: Bold intermediate topography that shows rounded crests and local ribbing. Minor resistant outcrops locally near Altamont. More resistant than unit 668. Some tonal banding.

Composition: (1) Sandstone, medium to coarse grained, moderately sorted, fairly clean, containing some calcite-cemented beds, zones, and concretions; (2) silty fine-grained sandstone; (3) flysch of fine-grained, laminated sandstone interbedded with mudstone; (4) conglomerate of pebbles and cobbles, and pebbly sandstone, near Dyer Road. Much to probably most of unit is sandstone (composition 1 and some interbedded composition 2), much flysch, minor conglomerate.

Hardness: Sandstone is largely firm where weathered and probably where fresh, but hard where calcite cemented. In flysch, sandstone and mudstone are firm both where fresh and weathered. Conglomerate is firm with hard clasts.

Bedding: Both sandstone and flysch occur in very thick (30-ft or more) intervals. Sandstone beds are distinct and thick to very thick (as much as 10 ft or more) between silty sandstone interbeds to thick. Flysch consists of distinct thin to medium beds of laminated sandstone repetitively interbedded with similar thicknesses of mudstone. Cannonball concretions in sandstone as large as 6 ft in diameter. Conglomerate and pebbly sandstone near Dyer Road as thick as 100 ft.

Parting: At distinct bedding planes and within mudstone at close to very close spacing. Sandstone beds as thick as 10 ft or more lack parting. Thus, spacing in flysch largely close to very close, in sandstone wide to 10 ft or more.

Fracture: Thin to thick sandstone beds have spacing similar to bed thickness; very thick sandstone has wide to 8-ft spacing. Sandstone occurs in blocks as wide as 6 ft, calcite-cemented sandstone in blocks as wide as 4 ft, and concretions as large as 6 ft in diameter. Mudstone has close spacing of weathering fracture.

Permeability: Intergranular permeability of sandstone (composition 1) ranges from moderate to low approaching moderate, interbedded silty sandstone low, calcite-cemented rock very low, flysch very low to low. Thus, intergranular permeability of much to most bedrock low, some to much moderate, some very low (mudstone). Much flysch probably has low fracture permeability in shallow rock. Much mantle moderate, much low to very low.

Weathering: Calcite-cemented sandstone is fresh to outcrop or near outcrop. Uncemented sandstone weathered probably to depths greater than 20 ft.

Surficial mantle: Much granular, much clayey. Sandy clay soil, like sample AA18, is typical of most, but less expansive silty sand soil occurs over sandstone beds.

Expansivity: Most bedrock unexpansive, much expansive. Probably most mantle significantly expansive, some(?) severely expansive, some unexpansive. Sample AA18, mildly cracked sandy clay soil, typical, free swell 90 percent (exaggerated).

Stratigraphic thickness: More than 1,000 ft, as inferred from Huey (1948).

Sources: Briggs, 1953b; Colburn, 1964; Huey, 1948; Snow, 1957; two stations.

MAP UNIT 632

Geologic unit, (age), and location: Guinda Formation of Kirby (1942) (K), in and near Yolo Range.

Summary: Largely sandstone, some mudstone intervals. Much sandstone crops out in firm to hard resistant beds, much is poorly exposed. Most mantle significantly expansive, some severely expansive.

Composition: Sandstone and less abundant intervals of very thinly to thinly interbedded mudstone, shale, laminated sandstone, and siltstone, which are herein called mudstone intervals. Sandstone is arkosic wacke to arenite (borderline at 10-15 percent silt and clay matrix), mostly fine grained, some medium grained, medium to coarse grained in basal beds (see discussion of bedding cycles below), moderately well sorted to poorly sorted, angular to subangular grains. Silt and clay matrix does not fill pores; it is more abundant than in sandstone of unit 670 and less abundant than in sandstone of units 633 and 634. Much sandstone is well indurated and crops out, much is poorly indurated and poorly exposed. Well-indurated horizons contain calcite-cemented concretions as large as 12 ft in diameter, but commonly concretions are thick or less and as much as 8 ft in length.

Proportions are difficult to estimate because unexposed parts may be either soft sandstone or mudstone. Unit was described by Boyd (1956) to consist of cycles of basal sandstone that are well indurated and concretionary, followed by massive friable sandstone that grades upward into siltstone and mudstone. According to his description, only the well-indurated basal beds crop out, and nonresistant intervals contain much friable sandstone. In places, outcropping sandstone makes up over 50 percent of unit, in most places 25-50 percent. Thus, unit is probably largely sandstone, some mudstone. Toward top of unit, mudstone intervals increase in thickness and proportion, grading into unit 669.

Hardness: Where weathered, sandstone is mostly soft to firm, some hard (we estimate 30 percent of non-concretionary outcropping sandstone); where fresh, probably firm to hard. Concretions hard. Mudstone intervals have soft to hard pieces and firm to soft rock mass, both where fresh and weathered.

Bedding: Outcropping sandstone occurs in thick to very thick (as much as 30-ft or more) distinct beds; many intervals of outcropping sandstone (as thick as 50 ft or more) are composed of thick to 10-ft distinct beds between thin partings. Non-outcropping sandstone probably occurs in very thick to thin beds. Mudstone intervals are as thick as 40 ft or more and consist of very thinly to thinly bedded rock in distinct to indistinct beds.

Parting: At close to very close spacing within mudstone intervals; at contacts between sandstone and mudstone; and within many very thick outcropping sandstone intervals at wide to 10-ft spacing.

Fracture: In outcropping sandstone, fracture is irregular and mostly at wide to 6-ft spacing, but spacing ranges from moderate to 15 ft or more. Thin to thick sandstone beds have regular fracture perpendicular to bedding at spacing similar to bed thickness. In weathered mudstone intervals, close to very close spacing.

Permeability: Intergranular permeability of mudstone intervals (some of unit) very low to low; of sandstone (most of unit) mostly low, probably some moderate, much(?) very low where fresh, very low where cemented. Probably some shallow clayey rock has low fracture permeability. Much mantle moderate, much low, some very low.

Weathering: Mudstone intervals weathered to depths of 5-30 ft; sandstone weathered to similar or greater depths.

Surficial mantle: Largely granular, some to much clayey. Mantle is largely clayey sand, but some silty clay soil on mudstone intervals. Much bare rock.

Expansivity: Most bedrock unexpansive, some expansive. Most mantle significantly expansive, some severely expansive, some unexpansive. Samples: MV3, weathered silty shale, free swell 79 percent; MV25, sandy silty clay soil on mudstone, free swell 83 percent; MV26, typical clayey silty sand colluvium, mildly cracked, free swell 77 percent (exaggerated?); MD2A, typical sandy silty clay soil, mildly cracked, free swell 73 percent; MD2B, mottled sandy clay, most expansive material seen, free swell 89 percent. See sample FN2 of unit 669.

Stratigraphic thickness: 4,450 ft on Putah Creek (Boyd, 1956).

Sources: Boyd, 1956; Chuber, 1961; Kirby, 1943; Lawton, 1956; Ojakangas, 1968; Sims and others, 1973; seven stations.

MAP UNIT 633

Geologic unit, (age), and location: Sites Formation of Kirby (1942) (K), in and near Yolo Range.

Summary: Largely sandstone, some to much interbedded clayey rock. Most bedrock and mantle unexpansive.

Composition: Sandstone between intervals of interbedded mudstone, siltstone, laminated shaly sandstone, and shale, which are herein called mudstone intervals. Sandstone is typically arkosic wacke that consists of poorly sorted angular to subangular grains that are tightly packed; pores are filled or largely filled by either silt and clay matrix or calcite that largely replaces matrix. Thick and thinner beds of sandstone are mostly medium to fine grained; very thick beds are mostly medium to coarse grained, some gritty (significant percentage of granules). Some sandstone beds are described as poorly indurated and characterized by cavernous weathering. Sandstone includes minor scattered carbonate-cemented and limonitic spheroidal concretions as large as 3 ft in diameter.

Sandstone probably constitutes more than half of unit. In places, mudstone intervals make up 70 percent of the rock through a few hundred feet of section.

Hardness: Sandstone is hard where fresh and in calcite-cemented concretions, except laminated sandstone is probably firm where fresh; weathers hard to soft. Mudstone intervals have hard pieces where fresh, hard to firm pieces where weathered, and firm to soft rock mass owing to parting and fracture.

Bedding: Distinct thin to very thick sandstone beds between distinct to indistinct laminated to thin-bedded mudstone intervals. Sandstone occurs in intervals of different bedding character. Much of unit consists of sandstone in medium to thick or very thick (4-ft) beds between about equally abundant mudstone in thin to 6-ft intervals. The most striking parts of the section, however, are intervals as thick as 100 ft or even a few hundred feet of very thick bedded (as much as 20-ft or more) sandstone. Most sandstone is medium to thickly interbedded with mudstone intervals of about similar thickness, some is in prominent 10- to 20-ft beds.

Parting: At contacts between sandstone and mudstone, at close to very close spacing in mudstone intervals, and in some sandstone beds as follows: at wide to 4-ft spacing in some 10-ft sandstone beds, at moderate spacing in some thick sandstone beds, at moderate to wide spacing in some beds less than 4 ft in thickness.

Fracture: Thin to thick sandstone beds have regular fracture perpendicular to bedding at spacing generally similar to bed thickness, but in places closer than bed thickness. In very thick sandstone beds, fracture is irregular in orientation and spacing and in many instances seems related to concretions rather than bedding; spacing is close to 4 ft, rarely as wide as 15 ft. Much(?) sandstone exfoliates at close to moderate spacing. In mudstone intervals, close to very close spacing.

Permeability: Intergranular permeability of sandstone (most of unit) generally low, reported beds of poorly indurated sandstone (minor to some of unit) probably to moderate, much(?) sandstone very low where fresh; mudstone and shale (some of unit) very low. Probably most shallow mudstone and shale has low fracture permeability, and probably some shallow sandstone has moderate fracture permeability. Most mantle moderate, some to much low to very low.

Weathering: Variable. Thick and very thick sandstone beds may be hard to soft where weathered; weathering may extend to depths greater than 20 ft, but in places a color change from gray to buff occurs in sandstone as shallow as 8 ft. Weathering works inward from fractures and is retarded in concretions, which may stay fresh to the ground surface. Mudstone intervals that contain thin to medium sandstone beds are weathered in places to depth of only 3 ft, but mostly to depths of 5-15 ft.

Surficial mantle: Largely granular, some to much clayey. Granular mantle is largely sandy, some clayey sand.

Expansivity: Most bedrock and mantle unexpansive; some to much bedrock and mantle expansive, probably largely significantly expansive. Samples: MD4, uncracked sandy colluvium, probably typical of most mantle, free swell 65 percent (exaggerated?); MV5, mildly cracked clayey sand colluvium, probably typical of the most expansive mantle, free swell 80 percent.

Stratigraphic thickness: 4,000 ft at Putah Creek, probably thickening to south.

Sources: Boyd, 1956; Kirby, 1943; Lawton, 1956; Ojakangas, 1968; Sims and others, 1973; seven stations.

MAP UNIT 634

Geologic unit, (age), and location: Venado Formation of Kirby (1943) (K), in Yolo Range.

Summary: Much of unit is thick to very thick (as much as 100-ft) beds of sandstone between minor partings and intervals of flysch. This sandstone is hard and tough, has wide to 20-ft fracture spacing, and forms backbone of the Vaca Mountains; much blasting required at Monticello Dam. Remainder of unit is sandstone in beds as thick as 20 ft interbedded with flysch. Minor to some severely expansive bedrock and mantle.

Composition: Largely sandstone, but some to much of unit consists of intervals of thinly interbedded mudstone, siltstone, laminated shaly sandstone, and shale, which herein are called mudstone intervals. Sandstone is mostly medium grained; most has argillaceous cement that fills to nearly fills pores, but about half contains some calcite cement that apparently replaces argillaceous cement. Sandstone includes scattered calcite-cemented concretions. Near base, unit includes minor conglomerate of hard pebbles and cobbles that are mostly less than 6 in. in diameter but as large as 1 ft in diameter.

Half of unit or less, generally the basal half or less, is thick to very thick (as much as 100-ft) bedded sandstone between minor partings and mudstone intervals, which are mostly thin to 6 ft, but as thick as 50 ft. This part of unit thins to the south, to 150 ft thick at Gates Canyon. In remainder of unit, sandstone beds are mostly less than 20 ft thick and proportions vary from dominant sandstone to dominant mudstone intervals.

Hardness: Where fresh, sandstone is hard, especially concretions; where weathered, sandstone is firm, some hard, and concretions are hard. Conglomerate has hard clasts and matrix where fresh, hard clasts and firm to hard matrix where weathered. Mudstone intervals have firm to hard pieces where fresh, firm pieces where weathered. Shaly sandstone is soft where weathered.

Bedding: Distinct. In very thick bedded part of unit, sandstone beds range from thick to 100 ft, many thick to 10 ft, between mostly thin to 6-ft but as much as 50-ft mudstone intervals that are internally laminated to medium bedded, mostly laminated to thin bedded. Conglomerate beds are 6-35 ft in thickness. Other part of unit consists of variably abundant sandstone beds as thick as 20 ft between mudstone intervals that are internally thinly bedded.

Parting: At bedding planes, which vary in spacing from very close to close in some mudstone intervals to wide to very wide (as much as 100 ft, mostly less than 10 ft) in thick-bedded and very thick bedded sandstone. Minor fissile rock.

Fracture: In medium to thick sandstone beds, spacing is similar to bed thickness. In very thick sandstone beds, spacing ranges from wide to 20 ft and much is wider than 10 ft. In mudstone intervals, close to very close spacing where weathered.

Permeability: Intergranular permeability of sandstone low except much very low where fresh; mudstone intervals low to very low. Thus, intergranular permeability of bedrock is low to very low where fresh; largely low, some very low, where weathered. Some shallow sandstone has moderate fracture permeability; probably much shallow clayey rock has low fracture permeability. Most mantle moderate, some to much low to very low.

Weathering: Sandstone commonly(?) crops out hard; thin-bedded intervals weather to depths greater than 30 ft. Very thick sandstone remains fresh next to weathered thin-bedded rock.

Surficial mantle: Largely granular, some to much clayey. Sandy soil covers most large areas of sandstone; silty and clayey soils overlie thinly bedded rock.

Expansivity: Most bedrock unexpansive; some to much expansive, some or more of this severely expansive. Most mantle unexpansive to significantly expansive, minor to some severely expansive. Cracked material is confined mainly to certain zones over thinly bedded rock. Samples: MD8B, weathered silty claystone, free swell 80 percent; MD8A red clay mantle(?), well cracked, minor(?), free swell 94 percent; MV14, well-cracked red clay soil, more cracked than typical, free swell 78 percent; MD8C, typical colluvium on thinly interlayered rock, slightly cracked, free swell 59 percent.

Stratigraphic thickness: About 1,900 ft.

Sources: Boyd, 1956; Chuber, 1961; Kirby, 1943; Lawton, 1956; Ojakangas, 1968; Sims and others, 1973; Weaver, 1949; three stations.

MAP UNIT 635

Geologic units, (age), and location: Lower part of Knoxville Formation (Robinson, 1956) (J); part of shale unit (KJ), only near Niles District of Fremont; in the East Bay Hills between Hayward and Fremont.

Summary: Largely sandstone similar to Franciscan sandstone (units 700 and 701), some to much mudstone and shale, minor conglomerate. Most mantle significantly expansive.

Expression in aerial photographs: Unribbed intermediate topography, some or more of which is nonresistant.

Composition: (1) Sandstone that has matrix of silt and clay; fine to coarse grained, largely fine to medium grained, some pebbly; much contains iron- and manganese-rich cement; similar to Franciscan sandstone (Robinson, 1956). (2) Mudstone and lesser shale, much sheared. (3) Conglomerate like unit 616, consisting of subrounded pebbles and cobbles in matrix grading from shale to low permeability sandstone. Unit is largely sandstone, some to much mudstone, minor to possibly some conglomerate.

Hardness: Sandstone largely hard where fresh, firm to hard where weathered. Mudstone and shale firm to hard where fresh and weathered, probably largely firm where weathered and hard where fresh. Conglomerate of hard clasts in matrix that is hard to firm where fresh, firm where weathered.

Bedding: Much intershearing of sandstone and mudstone. Coherent bedded sequences show medium to very thick (4-ft) distinct sandstone beds between mudstone that is thin to 10 ft or more; sandstone beds probably as thick as 10 ft. Interbedding of sandstone and conglomerate reported by Robinson (1956).

Parting: Present on distinct bedding planes, at close to very close spacing in sheared mudstone (some of unit), and at close to very close spacing in shale.

Fracture: In sandstone, spacing ranges from close to wide, largely close and some moderate. Some sandstone has close to very close spacing of incipient fracture that develops where weathered, similar to weathering fracture in mudstone. Tectonic activity in area of exposure has produced variable and generally somewhat closer fracture spacing than typical for these materials. Where fresh, probably much mudstone is sheared at close to very close spacing; where weathered, mudstone has additional close to very close spacing of weathering fracture. Conglomerate has moderate to wide spacing.

Permeability: Intergranular permeability low to very low in sandstone and conglomerate, very low in mudstone; thus, entirely low to very low in bedrock. Much shallow mudstone and sandstone has low to locally moderate fracture permeability. Probably much mantle moderate, much low to very low.

Weathering: Sandstone weathered to depths greater than 10 ft, at least in places. Conglomerate weathered to depth of about 20 ft.

Surficial mantle: Granular to clayey, probably much of each. Mildly to very mildly cracked sandy clay, loam, and probably sandy soils.

Expansivity: Most bedrock unexpansive; some to much may be expansive, probably some of this severely expansive (sheared rock). Most mantle significantly expansive, probably some severely expansive, probably some unexpansive. Sample HAY9, mildly cracked clay soil, typical(?), free swell 74 percent.

Stratigraphic thickness: 500-1,000 ft (Robinson, 1956).

Sources: Hall, 1958; Robinson, 1956; three stations.

MAP UNIT 640

Geologic unit, (age), and location: Unnamed sandstone, shale, and conglomerate (T), near Point San Pedro on San Mateo County coast.

Summary: Rhythmically interbedded sandstone and shale, minor conglomerate of cobbles and boulders near middle of section; calcite cement common in fresh rock. Almost all bedrock and mantle unexpansive to significantly expansive.

Composition: Almost all is flysch of rhythmically interbedded sandstone and shale, probably much of each; minor conglomerate of cobbles and boulders (some as large as 5 ft in diameter) near middle of section. Sandstone is fine to coarse grained and arkosic. Calcite cement common in fresh rock.

Hardness: Sandstone hard where fresh, firm where weathered; shale firm to hard where fresh, firm to soft where weathered. Conglomerate matrix hard where fresh, firm where weathered; fresh conglomerate clasts hard; weathered boulders and some cobbles firm to soft, other cobbles hard.

Bedding: Distinct, rhythmic beds of sandstone and shale, most thin to medium, locally thick; conglomerate largely very thick.

Parting: At distinct bedding planes, largely close to moderate spacing; imperfect parting in shale at very close spacing.

Fracture: Sandstone has close to moderate spacing, locally wide; weathered shale close to very close; conglomerate has wide to 5-ft original spacing and moderate to close spacing of weathering fracture.

Permeability: Bedrock has largely very low, some low, intergranular permeability where fresh, much of both low and very low where weathered; fracture permeability low in shallow shale, possibly some moderate in shallow sandstone. Mantle largely low, minor to some moderate.

Surficial mantle: Most to almost all clayey, minor to some granular.

Expansivity: Much bedrock unexpansive, much may be significantly expansive (shale). Almost all mantle unexpansive to significantly expansive. Samples: MM18A, black shale, free swell 62 percent; MM18B, moderately cracked soil, free swell 79 percent (exaggerated?); MM19, moderately cracked soil, free swell 76 percent.

Stratigraphic thickness: Approximately 3,800 ft; conglomerate 160 ft maximum.

Source: Ellen and others, 1972.

MAP UNITS 641, 610, 620

Geologic units, (age), and location: Unnamed unit (TK); shale and sandstone (unit 641), mapped sandstone (unit 620), conglomerate (unit 610); only in Diablo Range east of Santa Clara Valley.

Summary: Unit 641 is flysch of sandstone and mudstone that includes some very thick sandstone beds, intervals of dominant sandstone, and minor conglomerate. Many zones of dominant sandstone are distinguished on map as unit 620; much conglomerate is distinguished on map as unit 610, not seen in field. Some sandstone is calcite cemented and much is hard although not calcite cemented. Most mantle in unit 641 is significantly expansive.

Expression in aerial photographs: Crests are largely intermediate, some hard; most slopes are ribbed. Ribbing is best developed in those places where photographs show light-toned bands and map shows sandstone beds. Regular pattern of ribbing and ridges shows minor variations probably related to local rock and surficial mantle. In places much hard topography. Some large gently sloping areas of lumpy intermediate topography occur high in profile and probably are related to clayey rock in folded terrain.

Composition: Flysch of mudstone intervals, including mudstone (much very fine sandy), shale, and some siltstone, interbedded with arkosic sandstone. Sandstone is fine to coarse grained, largely fine to medium grained. Most sandstone is moderately to moderately well sorted and of low intergranular permeability; minor sandstone is well sorted, medium grained, and of moderate permeability; and minor sandstone is fine grained and clayey, as evidenced by weathering fracture. Some sandstone (as much as one-third) is calcite cemented, at least in part, and occasional calcite-cemented concretions occur in uncemented sandstone. Some sandstone and mudstone is pebbly. Conglomerate consists of pebbles and cobbles as large as 8 in. in diameter; breaks around clasts. Limestone nodules occur in parts of flysch (Gilbert, 1943).

Unit 641 is largely flysch, but includes some very thick sandstone and minor conglomerate; in places, exposures in this unit show as much as one-third thick and very thick bedded sandstone, probably one-fifth overall. Unit 620 is largely sandstone, some mudstone. Most of unit 610 is conglomerate and sandstone.

Hardness: Most sandstone is hard where fresh, both where calcite cement is present and where it is absent. Weathered sandstone is firm to hard, much of each. Mudstone intervals are hard to firm where fresh, firm where weathered. Concretions and limestone nodules hard. Conglomerate where fresh and weathered has hard clasts in hard to firm matrix.

Bedding: Distinct. Flysch is composed of thin to thick, largely thin to medium, sandstone beds repetitively interbedded with thin to thick mudstone intervals. Little bedding noticed in mudstone intervals, but reported to be thinly bedded (Gilbert, 1943). Mudstone intervals and intervals of dominant sandstone, each as thick as 20 ft or more, are interbedded with flysch; within intervals of dominant sandstone, most sandstone beds are thick to 6 ft, some as much as 10 ft. Within unit 620, most sandstone beds are thick or less, but some are very thick, most of these less than 6 ft, some as much as 15 ft.

Parting: Present at contacts between sandstone and mudstone, mostly at close to wide spacing. Poor parting within mudstone at close to very close spacing, variable in quality; average throughgoing parting has close to moderate spacing. Some thick and very thick sandstone beds are parted internally, but such parting is not prominent in this unit; unparted portions of very thick sandstone beds are commonly as wide as 4 ft.

Fracture: In sandstone, spacing is similar to bed thickness in flysch, but very thick sandstone beds have irregular spacing that ranges from close to very wide (4 ft), largely moderate to wide, and some coherent blocks are as large as 8 ft. In unit 620, fracture in sandstone has largely moderate to wide spacing, some to very wide. Mudstone shows close to very close spacing of weathering fracture on close to wide, largely moderate, original spacing. Conglomerate has wide to 4-ft spacing. Concretions to large. Limestone nodules probably to moderate spacing.

Permeability: Intergranular permeability of mudstone mostly very low; sandstone and conglomerate largely low, minor moderate, but much(?) very low where fresh, and very low where calcite cemented (as much as one-third of rock). Thus, intergranular permeability of unit 641 largely very low, some low, probably minor moderate. Fracture permeability low in shallow mudstone (most of unit 641), low to moderate in shallow calcite-cemented sandstone. Mantle largely moderate in units 610 and 620; in unit 641 largely low, some moderate, probably some very low.

Weathering: Some is weathered irregularly, ranging from hard rock near ground surface to all weathered firm to depths greater than 10 ft. Some of this irregularity is because of calcite cement. Much hard rock in weathered zone. Much mudstone remains dark at depths of 3-5 ft, much does not.

Surficial mantle: Largely granular in units 610 and 620. Unit 641 has most to much clayey, some to much granular. Unit 641 shows largely uncracked to very mildly cracked light-brown loam soil, like sample MSZ10; some clayey soil and subsoil, such as samples SFl, MSZ11, and GHS6.

Expansivity: Most bedrock unexpansive, much may be significantly expansive (mudstone). Most mantle in units 610 and 620 unexpansive, some may be significantly expansive. Most mantle in unit 641 significantly expansive, minor to some unexpansive, probably minor severely expansive. Samples: MSZ10, very mildly cracked loam soil, typical, free swell 70 percent; SFl, mildly cracked sandy clay soil, free swell 79 percent; MSZ11, mildly cracked clay subsoil, free swell 70 percent. Unit includes some red clay subsoil like sample GHS6 of unit 660, free swell 83 percent.

Stratigraphic thickness: Unit 641 is more than 2,300 ft thick (Gilbert, 1943).

Sources: Gilbert, 1943; eight stations.

MAP UNIT 642

Geologic unit, (age), and location: Shale and sandstone (TK), only in Santa Cruz Mountains near Mount Madonna and Mount Umunhum. Includes units TKu, Tms, and Kgs of McLaughlin and others (1971).

Summary: Briefly seen in field. McLaughlin and others (1971) showed several units included within this unit, including their unit TKu (shale and minor interbedded wacke, elsewhere our unit 453), unit Kgs (wacke and interbedded shale, elsewhere our unit 647), and unit Tms (mudstone, elsewhere our unit 541). Our observations show largely flysch, some very thick zones of dominant sandstone, and some very thick zones of mudstone. Our observations did not detect materials like unit 541, but

mudstone and subporcelaneous mudstone as thick as a few hundred feet may occur. Probably most mantle significantly expansive.

Composition: Flysch of sandstone, fine to coarse grained, much medium to coarse grained, moderately sorted, some glauconitic, interbedded with mudstone and shale, much of which is silty and very fine sandy. Much sandstone is calcite cemented. Includes mudstone and subporcelaneous mudstone like unit 541. Also includes scattered concretions and local conglomerate (McLaughlin and others, 1971).

Unit probably consists largely of flysch of about equally abundant sandstone and clayey rock, some very thick sandstone, some very thick mudstone, minor to some subporcelaneous mudstone, and rare conglomerate.

Hardness: Sandstone is hard to firm where fresh and weathered, much calcite cemented. Mudstone and shale have firm to hard pieces where weathered.

Bedding: Distinct. Largely flysch of thin to thick sandstone beds repetitively interbedded with thin to thick mudstone and shale beds. Very thick sandstone beds commonly as thick as 6 ft without parting, some as much as 15 ft. Intervals of dominant sandstone as thick as 100 ft and more, and intervals of entirely mudstone as thick as a few hundred feet. Conglomerate lenses probably to thick.

Parting: Present on bedding planes and to a minor degree within sandstone beds. Poor parting within mudstone and shale, ranging from good parting at very close spacing (but not fissile) to hackly mudstone fracture; average spacing of throughgoing parting in clayey rock is close to moderate.

Fracture: In sandstone beds to thick, spacing is similar to bed thickness or less; in very thick sandstone, close to 4-ft spacing, most wide. Mudstone and shale have close to very close spacing of weathering fracture on moderate to wide original spacing.

Permeability: Intergranular permeability of much sandstone low, much very low (where calcite cemented); mudstone and shale very low. Thus, intergranular permeability of most bedrock very low, some to much low. Much to most shallow rock (cemented sandstone and much clayey rock) has low fracture permeability. Probably most mantle low to very low, some moderate.

Surficial mantle: Probably most clayey, some to much granular.

Expansivity: Probably most bedrock unexpansive, much may be significantly expansive, some may be severely expansive. Probably some or more mantle severely expansive (see unit 453), most significantly expansive, some unexpansive. No cracking observed.

Sources: Allen, 1946; McLaughlin and others, 1971; one station.

MAP UNIT 643

Geologic unit, (age), and location: Great Valley sequence, unnamed unit (K), only in the East Bay Hills near Oakland.

Summary: Interbedded hard sandstone and firm mudstone in variable proportions, from flysch of largely mudstone to largely sandstone in beds as thick as 25 ft. Much mantle is significantly expansive.

Expression in aerial photographs: Intermediate topography of smooth, largely ribless flanks that have intermediate to hard crests.

Composition: Interbedded sandstone and mudstone, some siltstone and shale. Sandstone is mostly medium grained, ranging from fine to coarse grained, poorly sorted, rich in biotite; generally contains argillaceous cement that nearly fills pores, but some is calcite cemented. Most interbeds are mudstone, but some dirty fine- to medium-grained sandstone, siltstone, and shale occur in interbeds. Includes local conglomerate similar to unit 615.

Case (1968) reported that sandstone is dominant in unit; our observations suggest dominant flysch. Thus, probably some to much is dominant sandstone, much to most flysch.

Hardness: Most sandstone is hard where fresh and weathered, but sandstone in thin to medium beds is mostly firm where weathered and some sandstone in thick and very thick beds is firm where weathered. Calcite-cemented sandstone hard. Mudstone, siltstone, interbed sandstone, and shale have firm pieces where fresh and weathered.

Bedding: Distinct and regular. Much is flysch of medium to thin sandstone regularly interbedded with thin to thick, mostly medium, beds of mudstone. Ranges from mudstone in very thick intervals, through flysch, through dominant sandstone in thick to very thick (5-ft) beds between thin to medium mudstone, to very thick (10- to 25-ft) sandstone beds. Siltstone, sandstone, and shale interbeds are mostly thin to medium. Some sandstone is laminated and cross laminated. Observations suggest that unit is largely flysch, 20-30 percent dominant sandstone.

Parting: At bedding planes (in much at close to moderate spacing). Crude parting within mudstone at close to very close spacing. Some parting within sandstone beds on lamination.

Fracture: In thick and very thick sandstone beds, spacing is generally close to wide, most close to moderate, but in places unit includes excavated blocks as large as 10 ft in diameter that contain internal incipient close to very wide (4-ft) spacing. In thin to medium sandstone beds, spacing is similar to bed thickness. Mudstone, siltstone, and shale have close to very close spacing where weathered.

Permeability: Intergranular permeability of sandstone largely low where weathered, low to very low where fresh; mudstone interbeds and calcite-cemented sandstone very low. Thus, intergranular permeability of fresh bedrock largely very low; of weathered bedrock much low, much very low. Fracture permeability low in most shallow mudstone, locally moderate in shallow sandstone. Probably some to much mantle moderate, much to most low.

Weathering: Color change at depth of 20-30 ft, mudstone pieces gray at depth of 20 ft. Radbruch (1969) reported that weathering may go as deep as 60 ft or more.

Surficial mantle: Probably some to much granular, much to most clayey. Much mantle is silty clay to clayey silt.

Expansivity: Much bedrock unexpansive, much may be significantly expansive. Much mantle unexpansive, much significantly expansive. Sample OE19, very mildly cracked silty clay soil, typical of more highly cracked soil on unit, free swell 60 percent.

Sources: Case, 1968; Radbruch, 1969; five stations.

MAP UNIT 644

Geologic unit, (age), and location: Great Valley sequence, sandstone and shale unit (K), only in the East Bay Hills near Hayward. Includes Hall's (1958) Niles Canyon and Del Valle Formations.

Summary: About two-thirds flysch, one-third dominant sandstone in beds as thick as 25 ft and intervals as thick as 200 ft or more. Most mantle is unexpansive to significantly expansive.

Composition: Sandstone interbedded with mudstone, shale, siltstone, and clayey fine-grained sandstone. Sandstone is largely fine to medium grained, some coarse grained, poorly to moderately well sorted, subrounded, arkosic in composition and contains biotite; most contains enough clay and silt matrix to produce low permeability; Hall (1958) reported more than 10 percent clay, about 5 percent biotite and carbonaceous material. Some sandstone is clean (Del Valle Formation) in contrast to dirty sandstone of most of unit (Niles Canyon Formation). Sandstone includes calcite-cemented beds and concretions that produce blocks as large as 6 ft in diameter, but most rock is not calcite cemented. Interbeds are largely mudstone and shale but include less abundant siltstone and clayey fine-grained sandstone. Unit includes minor unmapped conglomerate of hard rounded pebbles and cobbles as large as 10 in. or more in diameter, most less than 6 in., in low permeability sandstone matrix.

Hardness: Most sandstone is hard to firm where fresh and weathered, but some (Del Valle Formation) is firm to soft where weathered. Mudstone and shale have hard to firm brittle pieces. Hard clasts in conglomerate. Concretions hard.

Bedding: Distinct. About two-thirds of unit is flysch composed of thin to medium, rarely thick, sandstone beds repetitively interbedded with mostly medium to very thick (4-ft) mudstone or shale beds. About one-third of unit consists of 20- to 200-ft or more zones of dominant sandstone, which occurs largely in medium to very thick (4-ft) beds, but includes some beds as thick as 25 ft or more. Conglomerate occurs in lenticular beds as thick as 20 ft or more. Some sandstone (Del Valle Formation) has crossbedding and flow structure.

Parting: At bedding planes and within many very thick sandstone beds, but spacing is greater than 10 ft in some sandstone beds. Good to poor parting at very close to close spacing within much of shale and mudstone.

Fracture: Thin to medium sandstone beds have spacing equal to or less than bed thickness. Thick to very thick sandstone beds have mostly moderate to wide spacing, some as much as 5 ft. Mudstone, shale, siltstone, and clayey fine sandstone have close to very close spacing where weathered. Much sandstone flakes where weathered.

Permeability: Intergranular permeability of sandstone and conglomerate largely low, much(?) very low where fresh, some sandstone probably moderate; mudstone and shale very low. Thus, intergranular permeability of most bedrock very low where fresh; where weathered, much low, much very low, some(?) moderate. Low fracture permeability in much shallow bedrock. Probably most mantle low to very low, some moderate.

Weathering: Sandstone weathered generally to depth of about 30 ft, some to only 10 ft. Mudstone and shale are fresh to within 10 ft of ground surface.

Surficial mantle: Probably most clayey, some to much granular.

Expansivity: Probably most bedrock unexpansive, much may be significantly expansive, some may be severely expansive. Some to much mantle unexpansive, most(?) significantly expansive, some(?) severely expansive. See samples for units 660 and 646 and other units of the Great Valley sequence. Very mildly cracked mantle materials.

Stratigraphic thickness: 2,000-6,000 ft (Robinson, 1956), 5,500 ft (Hall, 1958).

Sources: Hall, 1958; Newton, 1948; Robinson, 1956; four stations.

MAP UNIT 645

Geologic unit, (age), and location: Great Valley sequence, sandstone and shale unit (K) (equivalent to part of Del Valle Formation of Hall, 1958), only south of Livermore Valley near Del Valle Reservoir.

Summary: Much of both flysch and very thick (as much as 15-ft) sandstone beds. Sandstone is generally better sorted and more permeable than other Cretaceous sandstone; some cemented hard, much weathers firm to soft. Probably some moderate intergranular permeability in sandstone. Much to most mantle is significantly expansive, some severely expansive.

Expression in aerial photographs: Largely intermediate topography, well ribbed, showing rounded crests; some hard topography. Much of unit is light-toned, unbanded to subtly banded, showing both light-toned resistant and dark-toned nonresistant bands 30-300 ft and more in width. Light-toned material does not produce sharp ridges and looks unusually nonresistant for Cretaceous sandstone.

Composition: (1) Sandstone, fine to coarse grained, moderately sorted. Called wacke by Hall (1958), but analyses of some samples show no clay or silt; thus, some or more is clean. Littoral or shallow neritic depositional environment. Some sandstone is calcite cemented in beds, zones, and concretions. (2) Flysch of siltstone, mudstone, and clayey fine-grained to very fine grained sandstone. Flysch in this unit contains more siltstone and silty rock and correspondingly less mudstone than other Cretaceous flysch.

Unit contains much of both very thick sandstone and flysch, the flysch including sandstone beds to thick. In places, as much as 70 percent is sandstone; on the whole, possibly as much as 50 percent of unit is sandstone. Section by Huey (1948) shows largely sandstone.

Hardness: Sandstone variably hard to soft in weathered zone, ranging from hard where cemented (some hard where no calcite cement) to mostly firm, some soft, where weathered; probably firm to hard where fresh. Clayey rock firm where weathered.

Bedding: Two styles, both distinct: (1) very thick (as much as 15-ft) sandstone beds and (2) flysch of medium to thick sandstone beds between thin to very thick (8-ft), mostly medium to thick, intervals of siltstone, mudstone, and clayey sandstone that are interbedded at very thin to medium. Flysch occurs in intervals as thick as 70 ft or more; sandstone is dominant in intervals as thick as 100 ft or more. Calcite-cemented sandstone beds and zones are as thick as 4 ft, concretions as large as 6 ft in diameter. Crossbedding and flow structures are common in sandstone.

Parting: At distinct bedding planes, moderate to very wide spacing. Largely absent within sandstone beds; present in mudstone intervals at very close to moderate spacing, mostly very close to close.

Fracture: Sandstone, where medium to thick bedded, has spacing similar to bed thickness or greater; where very thick bedded, spacing is close to 8 ft, some largely moderate to wide, some largely wide to 4 ft, and in places contains many oversize blocks more than 4 ft in width. Calcite-cemented sandstone has moderate to 4-ft spacing. Mudstone intervals have close to very close, some possibly moderate, spacing of weathering fracture.

Permeability: Sandstone in exposures has largely low intergranular permeability, but size analysis reported by Hall (1958) suggests some moderate; very low where calcite cemented and in some(?) fresh rock. Siltstone, mudstone, and clayey sandstone have low to very low intergranular permeability, probably low fracture permeability in shallow rock. Thus, intergranular permeability of weathered bedrock is largely low, some moderate; some very low, but this has low fracture permeability in shallow rock. Much(?) fresh bedrock has very low intergranular permeability. Probably much mantle moderate, much low to very low.

Weathering: Sandstone is generally weathered to depths greater than 25 ft, except calcite-cemented sandstone remains hard to ground surface or near ground surface. Weathering depth of mudstone intervals is unknown.

Surficial mantle: Granular to clayey, probably much of each. Soils range from uncracked sand to sandy clay, local clayey subsoil. Generally thick colluvium near base of slopes.

Expansivity: Most bedrock unexpansive, probably some expansive. Some mantle is severely expansive, much to most is significantly expansive, some to much unexpansive. Sample MDS13, uncracked sandy clay soil, free swell 80 percent (probably exaggerated), is typical. Some moderately cracked clayey subsoil, such as sample MDS3, free swell 132 percent, at base of slopes.

Stratigraphic thickness: As much as 9,000 ft (Hall, 1958); more than 9,000 ft (Huey, 1948).

Sources: Hall, 1958; Huey, 1948; six stations.

MAP UNIT 646

Geologic unit, (age), and location: Great Valley sequence, sandstone, shale, and minor conglomerate unit (K); only on east side of Santa Clara Valley near San Jose.

Summary: Probably largely flysch, but includes some sandstone beds to thick or more and minor to some conglomerate. On strike with conglomerate (unit 601). Some to much mantle severely expansive.

Expression in aerial photographs: Intermediate topography that is rounded and lacks ribbing, most is subdued.

Composition: Flysch of mudstone and siltstone interbedded with sandstone and lesser conglomerate. Sandstone is medium to fine grained and moderately to moderately well sorted. Conglomerate consists of pebbles to boulders, subrounded to well rounded; generally some to most clasts are larger than 3 in. in diameter, minor to some larger than 6 in.; matrix

is medium- to coarse-grained sandstone, some calcite cemented. Unit is largely flysch, but includes some thick to possibly very thick sandstone beds and probably minor to some conglomerate (none observed).

Hardness: Sandstone is quite firm to firm where weathered and probably where fresh; mudstone and siltstone firm where weathered, probably firm where fresh. Conglomerate has hard clasts in firm to hard matrix that may be soft and clayey where weathered.

Bedding: Distinct sandstone and conglomerate interbedded with mudstone and siltstone. Most sandstone beds are thin to medium, but some are thick and very thick, between mudstone and siltstone in thin to thick beds. Conglomerate probably thick to very thick.

Parting: Present at distinct bedding contacts and within mudstone at very close to moderate spacing.

Fracture: Sandstone has close to wide spacing, largely moderate. Mudstone and siltstone have close to very close spacing of weathering fracture. Conglomerate fractured at wide to very wide, mostly 3-8 ft.

Permeability: Intergranular permeability of mudstone very low, siltstone low; sandstone and conglomerate largely low, but weathered cemented conglomerate apparently moderate. Thus, intergranular permeability of much bedrock very low, much low, possibly minor moderate. Some shallow bedrock (mudstone) has low fracture permeability. Most mantle very low, some to much low.

Weathering: Similar to other Cretaceous flysch, such as unit 660.

Surficial mantle: Most to almost all is clayey.

Expansivity: Most bedrock unexpansive to significantly expansive, some may be severely expansive. Some to much mantle is severely expansive, much to most is significantly expansive. Samples: SJE1, fluffy silty and sandy clay soil, free swell 76 percent, is typical; SJE4, clay soil, free swell 100 percent, is common to typical. Consistent mildly cracked soil.

Sources: Crittenden, 1951; Templeton, 1912; two stations.

MAP UNIT 647

Geologic unit, (age), and location: Great Valley sequence, sandstone and shale unit (K), only in Santa Cruz Mountains between Sierra Azul and Mount Madonna. Includes unit Kgs of McLaughlin and others (1971).

Summary: Includes both flysch of one-third to one-half sandstone and intervals of unbedded dirty sandstone and siltstone that have weathering fracture. Probably most mantle significantly expansive.

Expression in aerial photographs: Hard, ribbed topography, some intermediate crests. Tree cover, no tonal banding.

Composition: Two main types: (1) Flysch of sandstone interbedded with mudstone and siltstone. According to Bailey and Everhart (1964), the sandstone is graywacke, largely of subangular to subrounded medium grains that are moderately well sorted, contains clayey material in matrix, is slightly calcareous, and locally contains pebbles or clay balls. (2) Indistinctly interbedded high-matrix, very fine grained to fine-grained sandstone, siltstone, and cleaner fine- to medium-grained sandstone, all containing matrix sufficient to produce weathering fracture or incipient weathering fracture. Subordinate compositions are: (3) Hard sandstone, not clearly calcite cemented, and (4) minor lenses of conglomerate as described for unit 602.

Unit is probably largely flysch consisting of one-third to one-half sandstone, but some to equally abundant composition 2. Minor to possibly locally some composition 3. Minor conglomerate.

Hardness: Sandstone in flysch is hard where fresh, largely hard and some firm where weathered; fresh and weathered mudstone and siltstone in flysch are firm to quite firm. Dirty sandstone and siltstone (composition 2) are largely firm where weathered, but some of this sandstone is hard fresh. Sandstone of composition 3 is hard to outcrop.

Bedding: In flysch, sandstone beds are distinct and repetitive, largely thin to medium, minor to some thick, rarely thicker than 4 ft, one bed as thick as 20 ft observed; mudstone and siltstone interbeds are thin to thick, mostly thin to medium. Lithologies of composition 2 occur as indistinct, gradational, very thick (10- to 20-ft or more) beds that form interbedded sequences 100-200 ft or more in thickness. Hard outcropping sandstone (composition 3) forms intervals as thick as 100 ft that are largely unbedded or indistinctly bedded internally.

Parting: Along distinct bedding contacts in flysch; absent in dirty sandstone and siltstone; absent to very wide spacing in very thick outcropping sandstone.

Fracture: In flysch, sandstone is fractured at spacing closer than bed thickness, largely close to moderate; beds as thick as 4 ft have largely moderate spacing, wide in places, and a 20-ft sandstone bed has moderate to wide spacing. Hard outcropping sandstone (composition 3) has largely moderate to wide spacing, ranging from close to 4 ft. Mudstone and siltstone in flysch have close to very close spacing of weathering fracture and moderate to wide original spacing. Dirty sandstone and siltstone (composition 2) have close to wide spacing of original stained fracture, upon which is superimposed weathering fracture that has close to very close spacing at the ground surface, close to moderate spacing immediately below the ground surface.

Permeability: Intergranular permeability of sandstone and siltstone largely low, much(?) very low where fresh; mudstone very low. Thus, intergranular permeability of much to most weathered bedrock low, some to much very low; most(?) fresh bedrock very low. Probably low fracture permeability in most shallow mudstone. Probably most mantle low, some to much moderate.

Weathering: Sandstone in places is fresh (dark colored) at depth of 3 ft, in most places weathered to depths greater than 5 ft. Dark-gray color in mudstone extends to the ground surface.

Surficial mantle: Probably much granular, much clayey.

Expansivity: Most bedrock unexpansive, some to much may be significantly expansive (mudstone). Probably most mantle significantly expansive. All soils uncracked.

Stratigraphic thickness: More than 1,000 ft, inferred from Bailey and Everhart (1964).

Sources: Bailey and Everhart, 1964; McLaughlin and others, 1971; four stations.

MAP UNIT 648

Geologic unit, (age), and location: Great Valley sequence, unnamed formation, undivided (K); only in and near Yolo Range.

Summary: Sandstone interbedded with mudstone and shale. Proportions uncertain, probably largely mudstone and shale. Probably some to much bedrock and much to most mantle is severely expansive.

Composition: (1) Sandstone, fine to coarse grained, mostly medium grained, moderately to moderately well sorted, much contains interstitial fines; includes about 20 percent hard calcite-cemented concretions and beds. (2) Mudstone (crude to absent parallel parting). (3) Shale (fissile). (4) Minor(?) hard siliceous rock (shale or siltstone) interbedded with shale.

Unit is probably largely mudstone and shale, some sandstone, but proportions are uncertain. Reported to contain an upper sandstone member and a lower mudstone or shale member (Sims and others, 1973). Our observations suggest that unit consists largely of mudstone and shale, but includes an estimated 10-40 percent sandstone in very thick (as much as 10-ft) beds.

Hardness: Mudstone and shale have firm pieces. Laminated sandstone is soft to firm where weathered; massive sandstone is mostly firm where weathered, probably firm where fresh, but includes about 20 percent hard concretions and beds. Siliceous rock hard.

Bedding: Our observations show one very thick (as much as 10-ft) bed of sandstone overlain by as much as 10 ft of laminated sandstone, followed by a 20-to 50-ft interval of shale and mudstone. Sandstone beds are distinct; some shale is laminated. Siliceous rock in thin to medium beds between shale.

Parting: In shale at very close spacing, but absent to crude in mudstone; proportion of mudstone to shale is uncertain. At very close spacing in

laminated sandstone and siliceous shale; and at contacts between sandstone and mudstone (very wide).

Fracture: Mudstone and shale have close to very close spacing where weathered. Spacing in sandstone ranges from close to very wide (as much as 10 ft), mostly moderate to 4 ft. Concretions (as large as 8 ft in diameter, ovoid) have moderate to wide fracture spacing; siliceous shale close to moderate.

Permeability: Intergranular permeability of mudstone, shale, and siliceous shale very low; of sandstone largely low, some very low, moderate in places. Thus, intergranular permeability of most bedrock very low, some low to moderate. Minor to possibly some shallow rock has low fracture permeability. Much to most mantle very low, some to much moderate.

Weathering: Shale is weathered to depth of about 10 ft, sandstone to depths of more than 30 ft.

Surficial mantle: Much to most clayey, some to much granular. About half of surficial soil is clayey sand, such as sample E6C, and half is sandy clay, such as sample E6A.

Expansivity: Most bedrock expansive, probably some to much severely expansive; some unexpansive. Most mantle expansive, much to most severely expansive, some to much significantly expansive. Bedrock sample: E6B, moderately cracked mudstone, free swell 103 percent; compare sample MV15B for unit 669. Surficial mantle samples: E6A, moderately cracked sandy clay soil, free swell 95 percent; E6C, mildly cracked clayey sand soil, free swell 93 percent (exaggerated?); MV19, brown clay soil, free swell 128 percent. Much road damage from expansivity.

Sources: Sims and others, 1973; two stations.

MAP UNIT 649

Geologic unit, (age), and location: Great Valley sequence, predominantly sandstone unit (K) correlative with F zone of Goudkoff (1942), only east of Livermore Valley.

Summary: About equally abundant sandstone and mudstone intervals; sandstone occurs both as medium to 4-ft beds between mudstone intervals of similar thickness and as very thick (tens of feet) beds. Unit is apparent southern extension of unit 650, similar in properties. Some hard calcite-cemented sandstone and concretions. Much mantle severely expansive.

Expression in aerial photographs: Subdued intermediate topography that forms flatirons. Topography is low lying and fine textured compared to units 668 and 400. Unit is finely and regularly banded by light-toned resistant and dark-toned nonresistant zones, about equally abundant, that range from 5 to 100 ft in width, mostly 5-20 ft in width.

Composition: (1) Sandstone, medium to fine grained, moderately sorted, angular grains; about 30 percent quartz, 65 percent feldspar, 5 percent biotite (Huey, 1948). Some is calcite cemented as beds, parts of beds, and dark red-brown concretions. (2) Mudstone intervals that consist of flysch of interbedded mudstone, shale, siltstone, and some sandstone. (3) Minor conglomerate of pebbles and cobbles as much as 4 in. in diameter in hard cemented sandstone matrix. Unit consists of about equally abundant sandstone and mudstone intervals; some sandstone is calcite cemented and concretions are abundant in some beds.

Hardness: Cemented sandstone and concretions are hard. Uncemented sandstone probably hard where fresh (see drill log from Huey, 1948); largely firm, some soft, where weathered. Mudstone intervals firm to hard where fresh, firm where weathered. Conglomerate hard where fresh, probably firm matrix and hard clasts where weathered.

Bedding: Distinctly interbedded sandstone and mudstone intervals. Mudstone intervals are flysch of very thin to medium indistinctly to distinctly interbedded mudstone, shale, siltstone, and some sandstone. Sandstone is interbedded with mudstone intervals in two styles: (1) as medium to 4-ft beds between mudstone intervals of similar thickness, and (2) as very thick (as much as 25-ft or more) sandstone bodies. Some very thick sandstone beds are internally indistinctly bedded at medium to 6 ft. Zones of dominant sandstone as thick as 30 ft or more. Cemented sandstone occurs as beds and zones to thick and as concretions as large as 6-ft spheroids. Expression in aerial photographs suggests alternating zones of dominant sandstone and dominant mudstone mostly 10-20 ft thick, as much as 100 ft.

Parting: Present at distinct bedding planes, within some very thick sandstone bodies at moderate to 6-ft spacing, and within mudstone intervals largely at close to very close spacing.

Fracture: Spacing in sandstone is moderate to 4 ft, largely wide, both where cemented and not cemented. Concretions are as large as 6-ft spheroids, but most are fractured at wide to 4-ft spacing. Mudstone intervals have largely close to very close spacing of weathering fracture.

Permeability: Intergranular permeability of weathered sandstone largely low approaching moderate, some to much moderate; much(?) fresh sandstone very low; clayey interbedded rock very low to low; cemented sandstone very low; thus, much bedrock low, much very low, some moderate. Low fracture permeability in much shallow rock (cemented sandstone and much of mudstone intervals). Much mantle moderate, much very low.

Weathering: Cemented sandstone remains hard to the ground surface or near the ground surface; uncemented sandstone and mudstone intervals are weathered to greater than depth of cuts (about 10 ft).

Surficial mantle: Much granular, much clayey. Silty sand soil overlies sandstone, covers about half of unit; sandy clay soil, such as sample MDW27, overlies mudstone, covers about half of unit.

Expansivity: Most bedrock unexpansive; much may be expansive, largely significantly expansive. Much mantle unexpansive to possibly significantly expansive; much expansive, largely severely expansive. Samples: MDW27, mildly cracked sandy clay soil, typical of much, free swell 106 percent; MDW23, moderately cracked sandy clay soil, free swell 93 percent. See samples for unit 650.

Stratigraphic thickness: About 3,500 ft, inferred from Huey (1948).

Sources: Briggs, 1953b; Colburn, 1964; Huey, 1948; Snow, 1957; five stations.

MAP UNIT 650

Geologic unit, (age), and location: Panoche Formation, Joaquin Ridge Sandstone Member of Goudkoff (1945) (K), east of Mount Diablo.

Summary: Sandstone and about equally abundant flysch of largely mudstone and siltstone. Sandstone beds commonly as thick as 10 ft, rarely 100 ft. Some to half of sandstone is cemented; blasting required in cemented beds more than 10 ft thick. Much mantle severely expansive.

Expression in aerial photographs: Variable, from low-lying, unribbed intermediate hogback topography to prominent intermediate to hard hogbacks; much of both topographic styles. Unit in both styles shows regular light- and dark-toned bands, prominent to subdued, that range from less than 10 ft to 100 ft or more in width. Includes some strikingly hard, ribbed topography west of Canada de Los Poblanos; here bands are repetitive, most 10 ft or less in width but as wide as 20 ft, varying from more than half light-toned to less than half light-toned, some dark-toned bands as wide as 100 ft. On east side of Canada de Los Poblanos, low-lying intermediate topography is largely light-toned and resistant but contains some dark-toned bands.

Composition: (1) Sandstone, largely arenite (Colburn, 1964); largely moderately sorted, ranging from poorly to moderately well sorted; largely medium grained, ranging from fine or very fine to coarse grained, the fine-grained rock in thinner beds, the coarse-grained rock largely in very thick beds. Much sandstone, locally most, is silty and clayey and scales where weathered. Some to half of sandstone is calcite cemented, in beds and concretions, some only partially cemented (firm). (2) Platy sandstone, fine to medium grained, grading to siltstone; very thin to medium bedded. (3) Mudstone intervals (flysch), consisting of mudstone, lesser siltstone and shale, and interbedded very fine grained to medium-grained sandstone in beds to medium. (4) Medium to thick interbedded siltstone, very fine grained sandstone, some mudstone, and about one-fourth

sandstone of which most is cemented, some scaly. (5) Conglomerate consisting of rounded to angular pebbles to small boulders (average 4-6 in. in diameter, some as large as 12 in.) in sandstone matrix; typically about 40 percent clasts, 60 percent matrix; most is calcite cemented, hard, breaks across clasts. Associated are gritty zones in sandstone. (6) Porcelaneous shale; occurs in one body, as thick as 30 ft, that is used as a marker bed on both sides of Mount Diablo.

Expression in aerial photographs suggests about equally abundant sandstone (composition 1) and mudstone intervals (composition 3). Roadcuts in resistant zones generally show about equal amounts of sandstone and mudstone to somewhat more sandstone, suggesting that unit as a whole is less than half sandstone. Less resistant zones are largely mudstone intervals (composition 3), but include some platy sandstone (composition 2). Unit includes some rock of intermediate resistance (composition 4). Porcelaneous shale is rare. Some to half of sandstone, in many places about half, is calcite cemented; some to much sandstone is scaly.

Hardness: Mudstone, siltstone, and shale are firm where fresh and weathered. Sandstone is firm to hard where fresh; generally it weathers firm, some quite firm, some approaching soft, except cemented sandstone is hard where fresh and weathered and scaly sandstone weathers firm to soft. Conglomerate is cemented and hard. Porcelaneous shale probably hard where fresh and weathered.

Bedding: Most mudstone intervals are flysch that consists largely of very thin to medium indistinctly interbedded mudstone, siltstone, and very fine grained sandstone, but contains repetitive thin to medium distinct sandstone beds between medium to thick beds of clayey rock; some or more mudstone intervals consist of very thick (as much as 5-ft) beds of mudstone or siltstone. Composition 4 has uniform medium to thick sandstone, siltstone, and mudstone beds. Sandstone (composition 1) occurs in distinct beds that are thin to medium within mudstone intervals (flysch); otherwise beds are largely thick to 10 ft, some (locally most) 10-50 ft, in places as thick as 100 ft, between similar thicknesses of mudstone intervals or platy sandstone. Mudstone intervals that contain minor sandstone to thick are as much as 300 ft in thickness; zones of more than 90 percent sandstone are as thick as 100 ft or more. Calcite-cemented beds and concretions generally are thick or less, but as much as 6 ft. Conglomerate is generally as thick as 5 ft, rarely more than 20 ft. Porcelaneous shale occurs in zone as thick as 30 ft.

Parting: Present at distinct bedding planes and within many sandstone beds; within mudstone intervals at very close to moderate spacing, much at very close to close; within platy sandstone largely at close to very close spacing. Thus, within about half of unit at very close to moderate spacing; within other half (sandstone) at distinct bedding planes and closer, largely wide to 10 ft, probably largely wide to 5 ft.

Fracture: Mudstone intervals have largely close to very close spacing of weathering fracture, some moderate; platy sandstone close to moderate; spacing in sandstone, cemented sandstone, and conglomerate ranges from close to 5 ft, largely moderate to wide in places, wide to 4 ft in other places. Porcelaneous shale probably close to very close, some moderate.

Permeability: Intergranular permeability of weathered sandstone largely low, much approaching moderate, but minor to locally some moderate; very low in much(?) fresh sandstone and where calcite cemented; mudstone intervals very low to low. Thus, intergranular permeability of much bedrock low, some moderate, much very low. Fracture permeability low in much shallow mudstone, low to moderate in shallow cemented sandstone. Much mantle moderate, much very low.

Weathering: Sandstone weathered to depths greater than 15 ft. Some sandstone scales where weathered, and some develops close to wide fracture parallel to ground surface to depth of about 10 ft. Some mudstone is fissile at ground surface, but weathers spheroidally or in mudstone fashion at depths of a few inches.

Surficial mantle: Much granular, much clayey. Texture varies with underlying bedrock. Typical soil on mudstone is sandy and silty clay, such as sample BHS1A; on sandstone, sandy silty soil, such as sample AS35, and clayey sand soil, such as sample AS38A, are typical.

Expansivity: Most bedrock unexpansive; much may be expansive, largely significantly expansive. Much mantle unexpansive to possibly significantly expansive; much expansive, largely severely expansive. Bedrock sample AS38C, typical weathered mudstone, mildly cracked, free swell 70 percent (exaggerated). Surficial mantle samples: AS38B, clayey sand subsoil, mildly cracked, more expansive than most, free swell 79 percent (exaggerated). Samples of typical mantle: BHS1A, dark sandy and silty clay soil on mudstone, mildly cracked, free swell 90 percent; AS35, uncracked granular soil, free swell 50 percent (exaggerated); AS38A, very mildly cracked clayey sand soil, free swell 51 percent (exaggerated). Samples of mantle over resistant zones: BHS1B, mildly cracked sandy clay soil on scaly sandstone, free swell 70 percent; and BHS1C, moderately cracked brown sandy clay soil, free swell 100 percent. BHS18, dark plastic clay soil, mildly to moderately cracked, free swell 115 percent, covers about 10 percent of unit, probably typical on unit 674. See samples for unit 649.

Stratigraphic thickness: 6,000 ft maximum (Brabb and others, 1971).

Sources: Brabb and others, 1971; Briggs, 1953b; Colburn, 1961, 1964; Goudkoff, 1945; Snow, 1957; nine stations.

MAP UNIT 651

Geologic unit, (age), and location: Marlife Shale of Payne (1962), mappable sandstone interbeds in upper shale and siltstone member (K), near Mount Diablo.

Summary: Not seen in field. Proportions may lie anywhere from about equally abundant sandstone and mudstone intervals (as in unit 650) to dominant mudstone (as suggested by expression in aerial photographs). Sandstone beds to very thick.

Expression in aerial photographs: Bold intermediate topography that has rounded crests and local ribbing. Topography is banded like unit 650, but here topography is bolder in general. Light-toned bands are 10-20 ft in width; intervening dark-toned bands are as wide as 150 ft, probably some more than 150 ft, mostly about 100 ft; unit includes some gray bands in contrast to light and dark tones.

Composition: Sandstone and mudstone intervals, probably similar to materials in units 650 and 675.

Physical properties: Like sandstone and mudstone intervals in units 650 and 675.

Permeability: Intergranular permeability of much bedrock low, much to most very low, minor to some moderate. Probably some to much low fracture permeability in shallow rock. Probably most mantle very low to low, some to much moderate.

Surficial mantle: Probably largely clayey, some to much granular.

Expansivity: Bedrock probably unexpansive to significantly expansive. Probably most mantle expansive, probably much severely expansive.

Sources: Briggs, 1953b; Colburn, 1961, 1964; Payne, 1960; Snow, 1957.

MAP UNIT 652

Geologic unit, (age), and location: Marlife Shale of Payne (1962), middle sandstone member (K), near Mount Diablo.

Summary: Approximately equal amounts of sandstone and mudstone intervals. Sandstone is quite firm to hard in beds commonly as thick as 6 ft; some requires blasting. Unit forms rugged topography and hogbacks. Probably most mantle significantly expansive.

Expression in aerial photographs: Resistant topography. To north near Marsh Creek Road, forms good hard hogback, regularly ribbed, capped by light-toned resistant band 100 ft or more in width. Here includes light-toned resistant zone as wide as 250 ft. Farther south, forms rugged intermediate topography showing some hard crests. Here unit is banded, much subtly, generally showing light-toned zones 10-20 ft in width, dark-toned zones 10-100 ft, but locally includes light-toned zones as wide as

50 ft and dark-toned zones as wide as 200 ft. In vicinity of Brushy Peak and especially east of Brushy Peak, rugged intermediate topography has local banding and abundant bold outcrops as wide as 150 ft.

Composition: Sandstone interbedded with mudstone intervals that consist largely of mudstone and siltstone. Sandstone is mostly medium grained, ranges from fine to coarse grained, is moderately sorted, of low permeability, and varies from scaly dirty sandstone to relatively clean, nonscaly sandstone; consists of both wacke and arenite (Colburn, 1964); includes calcite-cemented concretions. Near Brushy Peak, includes unit Kpd of Snow (1957), which consists largely of poorly sorted, pebbly, medium- to coarse-grained sandstone that has clay matrix, but contains much conglomerate of well-rounded pebbles, cobbles, and some boulders as large as 4 ft in diameter, in which clast occurrence ranges from scattered to concentrated at base of beds.

Unit is generally about half sandstone, half mudstone intervals. Near Brushy Peak, largely pebbly sandstone and in places mostly conglomerate (as much as two-thirds of 800-ft section).

Hardness: Sandstone is largely quite firm to hard where weathered and probably where fresh (pick point dents rock slightly, but solid sound); some is flaky and weathers firm. Concretions hard. Where weathered, mudstone has firm pieces, siltstone firm to hard pieces; probably same where fresh. Sandstone has been blasted in several beds thicker than 6 ft. Near Brushy Peak, sandstone is firm, case hardens; conglomerate has firm matrix and hard clasts.

Bedding: Distinct sandstone beds, generally thick to 10 ft, most less than 6 ft, ranging from medium to 20 ft, between mudstone intervals that are thin to very thick (as much as 150 ft if medium sandstone beds included). Unit contains some very thick intervals of sandstone, some very thick mudstone intervals, and some thick to 4-ft interbedded rock. Intervals of dominant sandstone are as thick as 250 ft or more; intervals of dominant mudstone and siltstone probably are of similar thickness. Mudstone intervals are laminated to medium bedded, generally indistinctly. Near Brushy Peak, sandstone beds are as thick as 75 ft and average about 15 ft between partings or thin siltstone; conglomerate beds are lenticular and as thick as 100 ft.

Parting: At distinct bedding contacts and within mudstone intervals at close to very close spacing, possibly moderate in some mudstone. Some mudstone weathers fissile, but most does not. Most sandstone beds are not parted. Near Brushy Peak, sandstone parted at about 15-ft spacing.

Fracture: In sandstone, largely wide to 4-ft spacing, ranging from moderate to 8 ft. Unit contains enormous unfractured blocks as large as 6 by 10 ft, quite firm to hard, definitely require blasting. Mudstone and siltstone have close to very close spacing of weathering fracture. Hard concretions in sandstone generally are as large as 4 ft in diameter, but near Brushy Peak as large as 9-ft spheres, averaging 5 ft in diameter in some horizons.

Permeability: Intergranular permeability of most sandstone low except very low where cemented and in much(?) fresh bedrock; near Brushy Peak probably much sandstone moderate; madstone and siltstone very low to low. Thus, intergranular permeability of most(?) fresh bedrock very low; most weathered bedrock low, much very low, minor to some moderate. Some shallow bedrock has low fracture permeability. Much mantle moderate, much low to very low.

Weathering: Sandstone is weathered to depths of more than about 25 ft; mudstone intervals have weathering fracture to similar depths. Near Brushy Peak, sandstone and conglomerate crop out boldly.

Surficial mantle: Much granular, much clayey. Clayey sand soil is typical in much.

Expansivity: Most bedrock unexpansive, much may be significantly expansive. Probably most mantle significantly expansive, some severely expansive, some unexpansive. Sample AS40, very mildly cracked clayey sand soil, typical, free swell 70 percent (exaggerated).

Stratigraphic thickness: As much as about 2,000 ft (Brabb and others, 1971).

Sources: Brabb and others, 1971; Briggs, 1953b; Colburn, 1961, 1964; Payne, 1960; Snow, 1957; two stations.

MAP UNIT 653

Geologic unit, (age), and location: Great Valley sequence, predominantly sandstone unit (K) correlative with G-1 zone of Goudkoff (1942), only north and east of Livermore Valley.

Summary: No bedrock exposures examined. Aerial photographs suggest uniform, subdued resistant lithology, such as clayey sandstone. Mantle largely sandy clay, largely expansive.

Expression in aerial photographs: Intermediate topography that lacks ribs, subdued resistant; dark photographic tone contains subdued lighter patches on shoulders. Homogeneous, lacks banding; suggests uniform clayey sandstone or similar fairly nonresistant lithology.

Composition: Unknown; probably largely uniform clayey sandstone, or clayey sandstone indistinctly interbedded with sandy mudstone.

Hardness: Probably firm where weathered, firm to hard where fresh.

Bedding: Unknown. Probably either thin to thick interbedding or very thick (tens of feet) indistinct beds of little contrast.

Fracture: Unknown, probably moderate to wide original spacing and very close to moderate spacing of weathering fracture.

Permeability: Intergranular permeability of bedrock probably largely low where weathered, much(?) very low where fresh. Most mantle very low to low.

Surficial mantle: Largely clayey. Two main types: moderately cracked to well-cracked dark sandy clay soil, such as sample AA20B, that probably covers 60-90 percent of unit, and mildly cracked brown fluffy sandy clay soil, such as sample AA20A, that probably covers 10-40 percent of unit. Proportions estimated from field observation (10-90) and photographic tone (40-60).

Expansivity: Most bedrock unexpansive to possibly significantly expansive; most mantle expansive. Samples: AA20A, mildly cracked sandy clay soil, free swell 78 percent; AA20B, moderately cracked to well-cracked dark sandy clay soil, free swell 105 percent (exaggerated).

Sources: Huey, 1948; Snow, 1957; one station.

MAP UNIT 654

Geologic unit, (age), and location: Joaquin Miller Formation (K), in the East Bay Hills near Oakland.

Summary: Hard sandstone and siltstone interbedded with shale in about equal proportions. Minor conglomerate and limestone lenses. Almost all mantle unexpansive to significantly expansive.

Expression in aerial photographs: Strongly ribbed slopes and intermediate crest.

Composition: Resistant beds of sandstone and siltstone interbedded with about equally abundant less resistant shale. Sandstone is fine- to medium-grained arkosic and feldspathic biotitic wacke that contains interstitial silt and clay sufficient to produce low intergranular permeability. Carbonate concretions are common and some sandstone is carbonate cemented. Sandstone beds increase in frequency and thickness toward top of unit. Minor conglomerate (probably similar to unit 615); rare limestone.

Hardness: Sandstone, siltstone, and shale generally have hard pieces both were fresh and weathered, but some sandstone and shale may be firm where weathered. Conglomerate probably has hard clasts in firm matrix where weathered. Radbruch (1969) reported that weathered rock is firm to soft.

Bedding: Distinct sandstone and siltstone in medium to very thick (most less than 10-ft, but as much as 30-ft) beds, mostly medium to thick, between shale beds that are mostly very thin to thick but as much as 20 ft. Minor conglomerate in lenses 5-20 ft thick. See section by Case (1963).

Parting: In almost all of unit at close to moderate spacing, rarely wide and very wide. Parting occurs along bedding planes and within much sandstone, and shale has fair to good parting at close to very close spacing.

Fracture: In sandstone and siltstone at close to wide spacing, except very wide (about 4-ft) in uncommon very thick beds. Weathered shale has close to very close spacing.

Permeability: Intergranular permeability of weathered sandstone, siltstone, and conglomerate low, shale and much(?) fresh sandstone and siltstone very low. Thus, intergranular permeability of most fresh bedrock very low; much weathered bedrock low, much very low. Shallow shale has low fracture permeability. Probably most mantle low, possibly some moderate.

Weathering: To depths greater than 10 ft. Radbruch (1969) reported that weathering may extend to depth of 50 ft in places.

Surficial mantle: Probably largely clayey, some(?) granular. Sandy clay soil.

Expansivity: Much bedrock unexpansive, much may be significantly expansive. Almost all mantle unexpansive to significantly expansive. Largely uncracked sandy clay soil; some is mildly cracked, similar to sample OE32 of unit 667, free swell 70 percent.

Stratigraphic thickness: As much as 2,500 ft (Case, 1968).

Sources: Case, 1963, 1968; Radbruch, 1969; two stations.

MAP UNIT 655

Geologic unit, (age), and location: Great Valley sequence, unnamed sandstone and shale, undivided (equivalent to unit Ku? of source map) (K); only northwest of Mount Diablo.

Summary: Mudstone, claystone, and shale, and about equally abundant firm (weathered) sandstone; bands of dominant clayey rock and dominant sandstone as thick as about 10 ft. Much to most bedrock and mantle is expansive, some or more is severely expansive.

Expression in aerial photographs: Intermediate topography that lacks ribbing. Some subtle control of ridges by bedding, which is expressed as equally abundant light- and dark-toned bands as wide as 10 ft.

Composition: Sandstone interbedded with clayey rock. Sandstone is fine to medium grained and includes some clayey tapioca-type sandstone. Clayey rock is mostly mudstone, some claystone, and minor to some fissile shale. Unit consists of about equally abundant sandstone and clayey rock, as judged from aerial photographs and one exposure.

Hardness: Mudstone, claystone, and shale probably are firm where fresh and weathered. Sandstone firm where weathered, firm to hard where fresh.

Bedding: Sandstone beds are distinct and to thick or more, and occur in zones of dominant sandstone as thick as 10 ft (on aerial photographs). Zones of dominant mudstone are as thick as 10 ft or more (on photographs), beds as thick as 6 ft or more.

Parting: Probably present at bedding contacts, moderate to very wide (10-ft) spacing.

Fracture: Unknown. In clayey rock, probably moderate original spacing and close to very close spacing of weathering fracture; in sandstone, probably close to wide spacing and much weathering fracture at close to very close spacing.

Permeability: Intergranular permeability of clayey rock and much(?) fresh sandstone very low; most sandstone low. Thus, intergranular permeability in much weathered bedrock low, much very low; most fresh bedrock very low. Some shallow bedrock has low fracture permeability. Most mantle low to very low, some to much moderate.

Surficial mantle: Largely clayey. Most is probably sandy clay or silty clay.

Expansivity: Much to most bedrock is expansive, some or more is severely expansive; much unexpansive. Most mantle is expansive, some or more is severely expansive; some to much unexpansive. Sample CL7A, moderately cracked weathered claystone, free swell 105 percent, is most expansive material seen in unit. Minor to some mantle has expansivity similar to this sample, but most mantle is mildly cracked to uncracked.

Sources: Briggs, 1953b; Colburn, 1962, 1964; Turner, 1891; one station.

MAP UNIT 656

Geologic units, (age), and location: Pigeon Point Formation (K); unnamed sandstone at San Bruno Mountain (KJ); in San Mateo County.

Summary: Not seen in field at San Bruno Mountain. Much sandstone, much interbedded mudstone and shale; includes some conglomerate south of Pescadero Point. Much mantle significantly expansive.

Composition: Much sandstone, much interbedded clayey rock consisting of mudstone, siltstone, and shale. Sandstone is fine to coarse grained, largely dirty. South of Pescadero Point, unit includes some conglomerate of pebbles, cobbles, and boulders in sandstone matrix.

Hardness: Sandstone and conglomerate matrix are hard where fresh, firm to locally soft where weathered; clayey rock firm to hard where fresh, firm to soft where weathered; conglomerate clasts hard where fresh, many firm where weathered.

Bedding: Distinct sandstone and conglomerate beds are very thin to very thick (20 ft or more), commonly thin to 4 ft; sequences of clayey rock thin to very thick (20 ft).

Parting: On distinct bedding planes, at very close to very wide (20-ft or more) spacing, largely close to 4-ft spacing; within most clayey rock at close to very close spacing.

Fracture: Sandstone and conglomerate have close to very wide (5-ft or more) spacing, conglomerate clasts generally fractured; close to very close spacing in weathered clayey rock.

Permeability: Intergranular permeability of most bedrock very low, some to much low (much of sandstone). Most shallow bedrock has low (locally moderate) fracture permeability. Mantle moderate to low, much(?) of each.

Surficial mantle: Granular to clayey, much(?) of each.

Expansivity: Most bedrock unexpansive, much may be significantly expansive (clayey rock). Much mantle unexpansive, much significantly expansive. Bedrock samples: SFS10A, shale, free swell 65 percent; SFS10B, typical shale in unit KJs of source map, free swell 65 percent; SFS10C, massive graywacke, free swell 64 percent. Surficial mantle samples: SFS11, sandy clay soil, free swell 60 percent; SFS12, uncracked thin stony clay soil, free swell 68 percent; SFS13, organic stony clay soil on ridgetop (possibly on old alluvium), free swell 90 percent; SFS14, uncracked sandy clay soil, free swell 51 percent.

Stratigraphic thickness: Thousands of feet.

Source: Ellen and others, 1972.

MAP UNIT 657

Geologic unit, (age), and location: Great Valley sequence, unnamed formation (KJ), in Yolo Range.

Summary: Sandstone in intervals as thick as 35 ft or more, partly calcite cemented, interbedded with siltstone, laminated sandstone, mudstone, and shale. Most mantle expansive. See unit 683.

Composition: Sandstone, mostly fine grained, poorly sorted, in part calcite cemented, interbedded with siltstone, mudstone, shale, and laminated fine-grained sandstone. Sandstone is probably partly calcite cemented in fresh as well as weathered rock. Probably much of unit is sandstone, much interbedded clayey rock.

Hardness: In weathered zone, sandstone is hard where calcite cemented, firm where not (these are about equally abundant in weathered zone), and soft where laminated; probably hard fresh. Weathered siltstone, mudstone, and shale have firm pieces, probably hard where fresh.

Bedding: Distinct. Sandstone occurs in very thick intervals (as much as 35 ft or more), within which beds are as thick as 10 ft. Sandstone also occurs in medium to thick beds and in very thin to thin beds interbed-

ded with clayey rock. Clayey rock is very thin to thin bedded. Intervals of dominant clayey rock are as thick as 30 ft or more.

Parting: At bedding planes and at very close to close spacing within clayey rock.

Fracture: Sandstone has mostly moderate to wide spacing, but spacing as wide as 5 ft occurs in thick to very thick beds. Clayey rock has close to very close spacing where weathered.

Permeability: In weathered zone, intergranular permeability of much sandstone low, much very low (where calcite cemented); most fresh sandstone very low; clayey rock largely very low. Thus, intergranular permeability of most fresh bedrock very low; much weathered bedrock very low, much low. Fracture permeability in shallow cemented sandstone low to moderate, low in much shallow clayey rock. Some to much mantle moderate, much to most low to very low.

Weathering: To depths greater than 15 ft.

Surficial mantle: Some to much granular, much to most clayey. Includes sandy clay, clayey sand, and silty soil.

Expansivity: Much bedrock unexpansive, much may be significantly expansive. Probably most mantle significantly expansive, some severely expansive, some unexpansive. Sample MG11, mildly cracked sandy and silty clay soil, typical, free swell 85 percent.

Sources: Two stations.

MAP UNIT 658

Geologic unit, (age), and location: Great Valley sequence, undivided (KJ), only in Mendocino highlands and Mayacmas Mountains.

Summary: Briefly seen in field. Materials like units 604 and 684, mainly well-bedded sandstone, mudstone or shale, and conglomerate, probably some to much of each. See descriptions of units 604 and 684 for likely physical properties.

Permeability: Intergranular permeability of bedrock probably very low to low, probably most has low total permeability in shallow rock. Probably much mantle moderate, much low.

Surficial mantle: Probably much granular, much clayey.

Expansivity: Bedrock is probably largely unexpansive, some may be significantly expansive. Probably almost all mantle is unexpansive to significantly expansive. Sample J2, typical subsoil on shale, may be contaminated from nearby units, free swell 50 percent (exaggerated).

Sources: Blake and others, 1971; McLaughlin, 1978; one station.

MAP UNIT 659

Geologic unit, (age), and location: Great Valley sequence, sandstone and claystone unit (KJ), in Marin highlands.

Summary: Not seen in field. Blake and others (1974) described unit as "sandstone and interbedded gray claystone, with rare thin sandstone beds and calcareous nodules, and dark gray, laminated, platy siltstone. Also includes a local cobble conglomerate...." Most materials are like unit 684; conglomerate is like unit 603; see descriptions of these units for likely physical properties. Proportions unknown, probably much of both sandstone and clayey rock.

Permeability: Intergranular permeability of bedrock probably very low to low, probably most has low total permeability in shallow rock. Mantle probably moderate to low.

Surficial mantle: Granular to clayey, proportions unknown.

Expansivity: Bedrock is probably largely unexpansive, much may be significantly expansive. Probably almost all mantle is unexpansive to significantly expansive.

Source: Blake and others, 1974.

MAP UNIT 660

Geologic unit, (age), and location: Great Valley sequence, predominantly shale unit (K), only in Diablo Range near and south of Calaveras Reservoir.

Summary: Almost all is flysch of thin to medium beds of firm to hard sandstone between medium to thick clayey rock; some thick and very thick beds of sandstone and zones of dominant sandstone. Some severely expansive bedrock and mantle.

Expression in aerial photographs: Largely intermediate, bumpy topography. Much is irregularly ribbed, much unribbed, lesser regularly ribbed. Mostly intermediate between regularly ribbed slopes and irregular slopes as in unit 801.

Composition: Flysch of largely clayey rock, including mudstone, sandy and silty mudstone, shale, and siltstone, interbedded with fine- to medium-grained, moderately to moderately well sorted arkosic and micaceous sandstone and lesser limestone beds and nodules. Interbedded with flysch are bodies of sandstone that are medium to coarse and some very coarse grained, much containing abundant biotite, some calcite cemented. Locally includes conglomerate in very thick sandstone interbeds. Concretions (minor) in some sandstone. Local dolomite nodules.

Generally 80-90 percent of unit is flysch, 10-20 percent is unmapped thick and very thick beds of sandstone, but in places as much as 50 percent is sandstone over intervals hundreds of feet thick.

Hardness: Clayey rock is hard to firm where fresh, firm where weathered; sandstone largely hard where fresh, some quite firm where fresh, firm to hard where weathered. Limestone and dolomite hard where fresh and weathered. Conglomerate hard where fresh, clasts hard where fresh and weathered.

Bedding: Distinct, regular, and repetitive. Flysch consists of thin to medium sandstone beds repetitively interbedded with medium to thick beds of clayey rock; many sandstone beds are laminated, and at least some, probably much, clayey rock is indistinctly laminated to thinly bedded. Intervals of clayey rock that lack sandstone interbeds are as thick as 10 ft or more. Thick and very thick sandstone beds are mostly less than 4 ft in thickness, but some are as thick as 15 ft; they occur in intervals as thick as tens of feet, rarely as much as 100 ft or more. Limestone beds and nodules thin to medium; dolomite nodules to thick; concretions to medium.

Parting: Present at distinct bedding contacts, close to wide spacing. Within clayey rock, parting at close to very close spacing ranges in quality from shale that has good parting at very close spacing (although not fissile) to hackly-fractured mudstone; average or general throughgoing parting in clayey rock has close to moderate spacing. Much thick-bedded and very thick bedded sandstone parts at close to wide spacing.

Fracture: Clayey rock and flysch have moderate to wide original spacing: weathering fracture in clayey rock at close to very close spacing, in flysch sandstone at spacing similar to bed thickness (close to moderate). Spacing in thick-bedded and very thick bedded sandstone ranges from close to very wide (4 ft), much being close to moderate, much moderate to wide. Spacing in limestone close to moderate, in dolomite wide, in conglomerate wide to 4 ft.

Permeability: Intergranular permeability of clayey rock very low to low; sandstone low where weathered, low to very low where fresh and where calcite cemented; limestone and dolomite very low. Probably much low fracture permeability in shallow clayey rock. Thus, bedrock has very low to low intergranular permeability, probably much low fracture permeability in shallow rock. Probably some mantle moderate, much to most low, some very low.

Weathering: Sandstone fresh at depth of 15-25 ft; mudstone fresh probably at 15 ft (gradational, no careful observation). Some coarse-grained sandstone weathers spheroidally.

Surficial mantle: Granular to clayey, probably much of each. Most is uncracked to mildly cracked sand, silt, and clay soil (loam), such as sample CVR11; some clay soil and subsoil, such as sample GHS6. Western body in Alum Rock Park typically has sandy and silty clay soil, such as sample CVR34.

Expansivity: Most bedrock probably unexpansive, some severely expansive. Most mantle significantly expansive, some severely expansive,

minor to some unexpansive. Bedrock samples: SJE2, moderately cracked weathered clayey bedrock, constitutes some of unit, free swell 80 percent; CVR14, rare well-cracked weathered bedrock, free swell 77 percent (exaggerated). Surficial mantle samples: CVR11, typical mildly cracked loam soil, free swell 62 percent; CVR34, moderately cracked sandy clay soil, free swell 85 percent; GHS6, local moderately cracked red sandy clay subsoil, free swell 83 percent; some mantle appears similar in expansivity to bedrock sample SJE2.

Stratigraphic thickness: 1,000-2,000 ft at Alum Rock Park.

Sources: Crittenden, 1951; Templeton, 1912; 15 stations.

MAP UNIT 661

Geologic unit, (age), and location: Great Valley sequence, predominantly shale unit (K), only south of San Jose in Santa Teresa Hills and Santa Cruz Mountains.

Summary: Largely mudstone, some interbedded sandstone. Some to much mantle severely expansive.

Expression in aerial photographs: Near Sierra Azul, intermediate to hard topography, ribbed. In Santa Teresa Hills, subdued intermediate to soft topography.

Composition: (1) Mudstone and shale, largely mudstone (not fissile); (2) sandstone; (3) siltstone grading to very fine grained sandstone; and (4) carbonate-cemented concretions. Unit is largely mudstone and shale, some interbedded sandstone, minor to some siltstone and very fine sandstone, minor concretions.

Hardness: Mudstone and shale are firm, sandstone firm to hard, where fresh and weathered.

Bedding: Distinct sandstone interbeds are largely thin to medium, but as thick as 6 ft. Siltstone interbeds indistinct, very thin to thin. Concretions to medium. Most of unit (mudstone and shale) is unbedded except for sandstone or siltstone interbeds, which occur both repetitively interbedded as flysch and very widely spaced within dominant mudstone. Some intervals of mudstone, containing only several thin sandstone interbeds, are more than 100 ft thick (Bailey and Everhart, 1964).

Parting: Probably present in most of unit (mudstone and shale) at close to moderate spacing; also on distinct bedding contacts.

Fracture: Mudstone and shale have close to very close spacing of weathering fracture, probably on moderate to wide original spacing; fracture described as generally conchoidal (Bailey and Everhart, 1964). Sandstone has variable spacing depending on bed thickness; most is close to wide, but in very thick beds largely moderate to wide, some as much as 4 ft. Spacing in concretions to moderate.

Permeability: Intergranular permeability of mudstone and shale very low; of sandstone and siltstone largely low, some(?) very low where fresh. Thus, intergranular permeability of bedrock largely very low, some low. Probably much low fracture permeability in shallow rock. Most mantle very low to low.

Surficial mantle: Largely clayey. Clayey soils noted by Bailey and Everhart (1964) in Santa Teresa Hills.

Expansivity: Most bedrock probably unexpansive, much may be expansive. Some to much mantle is severely expansive, probably most is significantly expansive. Sample STH6, mildly cracked sandy clay soil, free swell 93 percent. No evidence of cracking at other stations.

Sources: Bailey and Everhart, 1964; four stations.

MAP UNIT 662

Geologic unit, (age), and location: Great Valley sequence, shale unit (K), only in the East Bay Hills near Dublin.

Summary: Briefly seen in field. Largely siltstone, mudstone, and shale, probably as flysch like that described for unit 644. Most mantle significantly expansive.

Expression in aerial photographs: Nonresistant zone through ribbed hillside.

Composition: Hall (1958) reported siltstone, containing abundant carbonaceous material and limonite concretions, and shale similar to that in unit 644. At sample locality DU5, unit consists of siltstone, shale, and mudstone that are poorly exposed. Unit probably consists of some each of siltstone, shale, and mudstone; probably minor interbedded sandstone, as in unit 644.

Hardness: Described as soft to hard (Hall, 1958). Where fresh, probably hard to firm; where weathered, largely firm and some soft.

Bedding: Siltstone described as well bedded, probably indistinctly. Shale is described as less well bedded, but has very thin crossbedding and graded bedding. Probably includes distinct interbedded thin to medium sandstone.

Parting: Probably present in most of unit at very close to moderate spacing, mostly very close to close.

Fracture: Largely close to very close spacing where weathered, probably moderate to wide where fresh.

Permeability: Intergranular permeability of bedrock very low, except some to much low where weathered (siltstone and sandstone); low fracture permeability in much to most shallow rock. Mantle largely low.

Surficial mantle: Largely clayey. Typically silt and clay soil, such as sample DU5.

Expansivity: Probably most bedrock unexpansive, some may be expansive. Most mantle significantly expansive. Sample DU5, light-gray silt and clay soil, typical, moderately cracked, free swell 52 percent.

Sources: Hall, 1958; one station.

MAP UNIT 663

Geologic unit, (age), and location: Great Valley sequence, shale unit (K), only in the East Bay Hills near Martinez and east of Livermore Valley near Tesla.

Summary: Not seen in field. Probably almost all is flysch that has physical properties, proportions, permeability, and expansivity like unit 679. Near Tesla, described by Huey (1948) as largely shale, in places carbonaceous, containing sparse limestone concretions; minor sandstone, commonly as thin beds.

Surficial mantle: Probably almost all clayey.

Sources: Huey, 1948; Tolman, 1931.

MAP UNIT 664

Geologic unit, (age), and location: Great Valley sequence, sandstone, shale, and minor conglomerate unit (K); only in Diablo Range near Sunol Valley.

Summary: Briefly seen in field. Largely flysch similar to unit 660, probably containing some thick to very thick sandstone beds as described for units 623 and 660. Permeability, expansivity, and surficial mantle texture are probably like unit 660. Mantle is similar to typical soils on unit 660, including some moderately cracked soil similar to sample CVR14.

Expression in aerial photographs: Mostly intermediate topography, some hard, depending on crests. Truncated spurs along Calaveras fault are ribbed in large part. Similar in appearance to unit 623.

Sources: Hall, 1958; one station.

MAP UNIT 665

Geologic unit, (age), and location: Great Valley sequence, sandstone unit (K), only west of Martinez in the East Bay Hills.

Summary: Most is mudstone and fine-grained to very fine grained sandstone, minor firm to hard glauconitic sandstone. Most bedrock and mantle expansive, some or more of each severely expansive.

Composition: Largely sandy mudstone, some fine-grained to very fine grained sandstone, and minor to possibly some fine- to coarse-grained glauconitic sandstone. Fine-grained to very fine grained sandstone var-

ies from clay saturated to clay free, but most has some clay; glauconitic sandstone is largely saturated by clay and silt.

Hardness: Generally firm pieces in sandstone and mudstone where weathered, probably same where fresh. Glauconitic sandstone hard to firm.

Bedding: Largely absent; beds of major compositions very thick (50-200 ft). Glauconitic sandstone in very thick (3- to 10-ft or more) distinct beds. Sandstone occurs at base of section, mudstone at top.

Parting: Absent except on glauconitic sandstone bedding contacts. In mudstone, crude planar fabric produces very poor fissility, no throughgoing parting.

Fracture: Both mudstone and fine-grained to very fine grained sandstone have close to very close spacing of weathering fracture on moderate to wide iron-stained original fracture. Most glauconitic sandstone has moderate to wide spacing, some as wide as 6 ft.

Permeability: Intergranular permeability of sandstone low except some(?) very low where fresh; mudstone very low. Thus, intergranular permeability of bedrock largely very low, some low. Probably much low fracture permeability in shallow rock. Most mantle low to very low.

Weathering: Weathered to buff color to depths greater than 30 ft.

Surficial mantle: Largely clayey.

Expansivity: Most bedrock and mantle expansive, some or more of each severely expansive. Samples: BN8, moderately cracked mudstone, free swell 102 percent; BN10, loam soil, mildly cracked, free swell 78 percent (exaggerated?).

Sources: Three stations.

MAP UNIT 666

Geologic unit, (age), and location: Strata of Anchor Bay (K), near Sonoma County coast.

Summary: Mudstone and lesser sandstone and conglomerate. Most bedrock and mantle is significantly expansive.

Composition: Mudstone and lesser sandstone and conglomerate. Most of unit is flysch of rhythmically interbedded mudstone and very fine grained to fine-grained sandstone; flysch is largely mudstone, but proportion of mudstone ranges from 25 to 95 percent. Flysch is interrupted by sequences of fine- to medium-grained sandstone that contain less than 25 percent mudstone and by beds of coarser sandstone and cobble conglomerate. Sandstone is moderately to poorly sorted and contains slightly chloritic(?) matrix. Most conglomerate clasts are mafic volcanic rock and gabbro, some are siliceous porphyritic volcanic rock. Unit is largely flysch, some sandstone, probably minor to some conglomerate.

Hardness: Fresh sandstone and conglomerate are hard, moderately weathered rock firm to hard, severely weathered rock soft to firm. Mudstone is firm where fresh and moderately weathered, soft where severely weathered.

Bedding: Distinct. Sandstone beds in dominant mudstone sections are thin to very thin; fine- to medium-grained sandstone beds thin to medium, locally thick; coarser sandstone and conglomerate medium to very thick (40 ft?).

Parting: Mudstone is not fissile; some laminated sandstone beds part along laminae.

Fracture: Spacing probably close to moderate in flysch sandstone, moderate to very wide in thick to very thick sandstone, very wide in conglomerate. In mudstone, spacing is close to moderate where fresh, close to very close where weathered.

Permeability: Intergranular permeability very low in mudstone, low to very low in fresh sandstone and conglomerate, low to moderate in weathered sandstone and conglomerate. Thus, intergranular permeability largely very low in fresh bedrock; low to locally moderate in much weathered bedrock. Most shallow rock (mudstone) has low fracture permeability. Most mantle low to very low, some moderate.

Weathering: Rock becomes soft where severely weathered, as on crest of major ridge occupied by unit.

Surficial mantle: Largely clayey, some granular.

Expansivity: Most bedrock and mantle significantly expansive, some of each unexpansive. Sample GU5, typical weathered mudstone, free swell 57 percent.

Stratigraphic thickness: 2,500-3,300 ft.

Sources: Blake and others, 1971; Wentworth, 1966; four stations.

MAP UNIT 667

Geologic unit, (age), and location: Shephard Creek Formation (K), in the East Bay Hills near Oakland.

Summary: Almost all flysch, but occasional thick and very thick (as much as 15-ft or more) hard to firm sandstone beds. Uncommonly abundant parting in sandstone beds; almost all rock parted at moderate and closer spacing. Nonresistant unit, forms valleys in places. Almost all mantle significantly expansive.

Composition: Flysch of fine-grained to very fine grained sandstone and siltstone regularly interbedded with mudstone, shale, and lesser laminated very fine grained sandstone. Less abundant medium-grained, micaceous sandstone in thick to very thick (as much as 15-ft) beds between intervals of flysch. Radbruch and Case (1967) described unit as massive shale. Probably almost all is flysch; minor to some thick to very thick sandstone.

Hardness: Sandstone hard to firm where weathered, probably similar where fresh; mudstone and shale pieces hard to firm; siltstone is hard and resistant in some rock, firm and nonresistant in other; laminated fine sandstone firm.

Bedding: Distinct. Flysch is composed of thin to medium sandstone beds repetitively interbedded with medium to thick, in places very thick (as much as 20-ft or more), intervals of mudstone and shale. Some sandstone beds thick to very thick (as much as 15 ft or more), but many of these consist of internal very thin to medium beds separated by very thin partings.

Parting: At bedding planes, mostly close to wide spacing; within most mudstone and shale at close to very close spacing; incipient parting in much of sandstone and hard siltstone at close to very close spacing; throughout most thick and very thick sandstone beds at close to moderate spacing. This unit has abnormally abundant parting within sandstone beds.

Fracture: In thin and medium resistant sandstone and siltstone beds, fracture spacing is closer than bed thickness; in thick and very thick sandstone, close to wide spacing. Mudstone, shale, firm siltstone, and laminated fine sandstone have close to very close spacing where weathered.

Permeability: Intergranular permeability of sandstone and siltstone low where weathered, much(?) very low where fresh; mudstone and shale very low. Thus, intergranular permeability of most bedrock very low, some low. Almost all shallow bedrock has low fracture permeability. Almost all mantle low.

Weathering: Sandstone weathered to depths greater than 20 ft. Mudstone fresh within 10 ft of ground surface.

Surficial mantle: Almost all clayey. Soil and colluvium are generally more than 5 ft thick (Radbruch, 1969). Soil is uncracked to mildly cracked, largely uncracked.

Expansivity: Most bedrock unexpansive to significantly expansive. Almost all mantle significantly expansive. Samples: OE39, weathered mudstone, mildly cracked on face of cut, free swell 70 percent; OE32, mildly cracked sandy clay colluvium, free swell 70 percent, more expansive than most, covers about 20 percent of unit.

Stratigraphic thickness: As much as 1,500 ft (Case, 1968).

Sources: Case, 1968; Radbruch and Case, 1967; Radbruch, 1969; three stations.

MAP UNIT 668

Geologic units, (age), and location: Great Valley sequence, predominantly shale units (K) probably correlative with E and F-2 zones of Goudkoff (1942), only north and east of Livermore Valley.

Summary: Flysch of mudstone and shale, containing minor to some thin to medium sandstone interbeds. Most mantle severely expansive.

Expression in aerial photographs: Smooth intermediate topography that lacks pattern; topography is coarser and much bolder than unit 649.

Composition: Flysch that consists of mudstone, shale, and lesser interbedded sandstone. Most to almost all of unit is shale and mudstone, much of each; minor to some regularly interbedded sandstone.

Hardness: Shale and mudstone are hard to firm where fresh (hard in drill hole (Huey, 1948), firm in exposures); firm where weathered. Sandstone firm to hard where fresh and weathered.

Bedding: Distinct thin to medium sandstone beds between medium to thick and very thick mudstone and shale.

Parting: In shale at very close spacing, in mudstone at close to very close spacing, and at sandstone contacts. Thus, throughout unit spacing is close to very close. Shale shows fissility only at ground surface, but breaks on parting to depths greater than 15 ft.

Fracture: Very close to moderate spacing in weathered mudstone and shale, close to moderate spacing in sandstone (similar to bed thickness).

Permeability: Intergranular permeability of shale and mudstone very low; of sandstone low except much(?) very low where fresh; thus, most to almost all bedrock very low, minor to some low. Much shallow bedrock has low fracture permeability. Almost all mantle very low.

Weathering: Fissility is opened in shale to depths of only several inches, but weathering fracture and potential parting are present in shale and mudstone to depths greater than 15 ft in cuts.

Surficial mantle: Almost all clayey. Fairly uniform clay soils, mostly fluffy.

Expansivity: Bedrock unexpansive to significantly expansive, possibly some severely expansive. Almost all mantle expansive, largely severely expansive. Samples: AA15, brown clay soil, moderately cracked, typical, free swell 105 percent; AA17, soil, mildly cracked, typical, free swell 100 percent (exaggerated); AA19, mildly cracked clay soil, typical, free swell 100 percent.

Stratigraphic thickness: About 3,000 ft, as inferred from Huey (1948).

Sources: Colburn, 1964; Huey, 1948; Snow, 1957; three stations.

MAP UNIT 669

Geologic unit, (age), and location: Forbes Formation of Kirby (1942) (K), in and near Yolo Range.

Summary: Almost all is mudstone, siltstone, clayey fine sandstone, and shale. Minor beds of sandstone, much of which is calcite cemented. Most mantle severely expansive.

Composition: Almost all is mudstone, siltstone, clay-saturated very fine grained sandstone, and shale. Includes minor sandstone, especially near base; rare hard siliceous shale; and rare beds of bentonite. Sandstone is fine to medium grained, arkosic wacke to arenite (on boundary), well to moderately well sorted, and ranges from clean rock to somewhat dirty rock that has partially filled interstices. In one of two exposures observed, sandstone is calcite cemented.

Hardness: Mudstone, siltstone, clayey fine sandstone, and shale have firm to soft pieces where weathered, probably firm to hard where fresh. Sandstone mostly hard to firm, some soft, but hard where calcite cemented. Siliceous shale hard.

Bedding: Most clayey rock is indistinctly very thinly to thinly interbedded. Sandstone beds distinct, thin to very thick (less than 20 ft). Siliceous shale in medium beds; bentonite in medium to thick beds.

Parting: At moderate to very close spacing in most of unit, but wide to very wide spacing in sandstone beds.

Fracture: Close to very close spacing of weathering fracture in most clayey rock, and much mudstone shows spheroidal weathering on close to moderate original spacing. In sandstone, mostly moderate to 4 ft, but as wide as 6 ft.

Permeability: Intergranular permeability very low to locally low in mudstone, siltstone, clayey fine sandstone, shale, and cemented sandstone; most uncemented sandstone low, probably some moderate, some(?) very low where fresh. Thus, intergranular permeability of most bedrock very low, some low, minor moderate. Probably some low to locally moderate fracture permeability in shallow rock. Most mantle very low, possibly some low.

Weathering: To depths greater than 8 ft.

Surficial mantle: Almost all clayey.

Expansivity: Most bedrock expansive, probably largely significantly expansive, at least rarely severely expansive (bentonite). Almost all mantle expansive, most severely expansive. Bedrock samples: E8B, bentonite, free swell 162 percent; MV15B, typical weathered shale and mudstone, mildly cracked on face of cut, free swell 73 percent. Surficial mantle samples: E8A, typical sandy clay subsoil, well cracked, free swell 113 percent; MV15A, typical clayey soil, well cracked, free swell 101 percent; E7, typical silty clay soil, moderately cracked, free swell 114 percent; FN2, silty clay soil on lithology typical of this unit but mapped within unit 632, free swell 78 percent.

Stratigraphic thickness: 2,200 ft maximum (Boyd, 1956).

Sources: Boyd, 1956; Chuber, 1961; Kirby, 1943; Sims and others, 1973; three stations.

MAP UNIT 670

Geologic unit, (age), and location: Funks Formation of Kirby (1942) (K), in Yolo Range.

Summary: Largely interbedded claystone, mudstone, siltstone, and lesser fine-grained sandstone, but minor to some thick to 20-ft sandstone beds in intervals as thick as hundreds of feet. Most weathered material is rich in clay. Most bedrock and mantle probably significantly expansive.

Composition: Largely thinly to very thinly interbedded claystone, shale, mudstone, siltstone, and some fine-grained sandstone, herein called mudstone intervals. Mudstone intervals are largely claystone or, where fissile, shale, so unit is very clay rich. Unit includes intervals of thick-bedded and very thick bedded sandstone as much as 450 ft thick (mapped as Canterbury sandstone unit in Lake Berryessa 15' quadrangle by Boyd, 1956) that are generally absent or less prominent south of Gates Canyon. Sandstone is moderately well sorted, fine grained to silty, composed of angular to subangular grains, and intergranular matrix is not abundant (undersaturated by clay and silt); sandstone is described by Boyd (1956) as barely a wacke, nearly an arenite, largely weakly indurated. Some sandstone horizons are calcite cemented and form hard, boldly outcropping rock; spheroidal calcite-cemented concretions that are mostly about 3 ft in diameter, but range from 1 to 10 ft in diameter, occur within sandstone in zones parallel to bedding or as isolated occurrences. Unit consists largely of mudstone intervals; generally unit includes minor to some sandstone, but locally (near Putah Creek) much sandstone.

Hardness: Mudstone intervals have hard to firm pieces where fresh and firm to soft rock mass both where fresh and weathered. Sandstone is hard where calcite cemented, otherwise firm to soft where weathered. Boyd (1956) reported that sandstone is weakly indurated and weathers readily and that exposures are friable.

Bedding: Mudstone intervals are very thin to thin bedded, indistinctly to distinctly. Sandstone occurs largely in intervals of dominant sandstone that consist of thick to 20-ft beds between thin partings. Sandstone intervals are as thick as 450 ft at Putah Creek, but farther south are mostly 15-50 ft thick, and south of Gates Canyon may be largely absent. Sandstone also occurs as isolated medium to 4-ft beds.

Parting: In mudstone intervals at close to very close; some to much clayey rock is fissile, some to much is not. In sandstone, mostly at moderate to wide spacing, but some as much as 10-20 ft.

Fracture: Mudstone intervals have close to very close spacing where weathered. Thin to medium sandstone beds have spacing similar to bed thickness, but most sandstone beds, which are thick to very thick, are fractured at wide to 6-ft, some moderate, spacing.

Permeability: Intergranular permeability of mudstone intervals very low; of sandstone low to moderate except very low in some(?) fresh sandstone and where calcite cemented. Thus, intergranular permeability of most bedrock very low, minor to some low to moderate. Some to much shallow bedrock probably has low fracture permeability. Most mantle very low to low.

Weathering: Mudstone intervals are weathered to depth of about 20 ft in one exposure; sandstone probably weathered to depths greater than 20 ft. Much free clay in weathered material.

Surficial mantle: Largely clayey. Much clay in colluvium and soil.

Expansivity: Most bedrock is expansive, largely significantly expansive; minor to some unexpansive. Most mantle is expansive, probably largely significantly expansive, some or more is severely expansive. Samples: MV4A, clay colluvium, mildly cracked, typical, free swell 72 percent; MV4B, clayey colluvium in slump, typical, free swell 80 percent.

Stratigraphic thickness: At Putah Creek, 1,150 ft (Boyd, 1956), 2,589 ft (Kirby, 1943).

Sources: Boyd, 1956; Chuber, 1961; Kirby, 1943; Lawton, 1956; Sims and others, 1973; two stations.

MAP UNIT 671

Geologic unit, (age), and location: Yolo Formation of Kirby (1942) (K), in Yolo Range.

Summary: Most is mudstone, siltstone, and shale, but contains some sandstone beds that are as thick as 8 ft or more, mostly thin to thick. Unit is nonresistant and underlies relatively low topography devoid of outcrop. Most bedrock and mantle expansive.

Composition: Most is mudstone, siltstone, and shale, but contains some sandstone beds that vary in abundance from scattered to locally as much as 40 percent or more of exposure; identical to flysch of unit 683. Sandstone is mostly medium grained, ranging from fine to coarse grained, poorly sorted, and largely saturated by clay and silt. Scattered zones of small to medium (3 in.) limestone concretions.

Hardness: Mudstone, siltstone, and shale have hard to firm pieces where fresh, firm pieces where weathered, and a firm to soft rock mass owing to parting and fracture. Sandstone is hard where fresh, firm to hard where weathered.

Bedding: Distinct. Flysch consists of thin beds of sandstone repetitively interbedded with medium to 4-ft intervals of clayey rock within which mudstone, siltstone, and shale are very thinly to thinly interbedded. Sandstone also occurs as medium to 8-ft beds, mostly medium to thick, between medium to very thick (30-ft or more) intervals of clayey rock or flysch.

Parting: At close to very close spacing in clayey rock. Really fissile rock (shale) is not abundant, but parting is pronounced. Also at sandstone contacts.

Fracture: Weathered clayey rock has close to very close spacing across bedding; some mudstone has moderate original spacing on which spheroidal weathering has developed. Sandstone in thin to thick beds is fractured perpendicular to beds at spacing similar to or closer than bed thickness. Very thick sandstone beds have irregular spacing at moderate to wide, less commonly as much as 8 ft.

Permeability: Intergranular permeability of mudstone, siltstone, and shale largely very low, of sandstone low except much(?) very low where fresh. Thus, intergranular permeability of bedrock largely very low, some to much low. Some shallow rock probably has low fracture permeability. Most to almost all mantle very low to low.

Weathering: Buff color generally extends to depths of 10-15 ft, but mudstone is gray at 4-8 ft and in places to within a few feet of the ground surface. Some sandstone is hard at depth of 6 ft.

Surficial mantle: Most to almost all is clayey. Clayey soil and colluvium is cracked to varying degrees.

Expansivity: Most bedrock expansive, probably much severely expansive. Most to almost all mantle expansive, probably much severely expansive. Bedrock samples: MV11, weathered mudstone, mildly cracked, free swell 62 percent; MV12A, well-cracked red clay (weathered bedrock?), free swell 100 percent; MV12B, typical weathered bedrock, free swell 90 percent. Surficial mantle samples: MD5, slightly cracked colluvium, typical, free swell 72 percent; MV29, sandy clay colluvium in landslide, free swell 87 percent.

Stratigraphic thickness: 700 ft (Boyd, 1956), 880 ft (Kirby, 1943).

Sources: Boyd, 1956; Chuber, 1961; Kirby, 1943; Lawton, 1956; Sims and others, 1973; five stations.

MAP UNIT 672

Geologic unit, (age), and location: Moreno Formation, upper siltstone member (K), east of Mount Diablo.

Summary: Probably largely mudstone and siltstone, some sandstone, and some claystone or shale. Much sandstone has moderate intergranular permeability, some is calcite cemented. Most mantle severely expansive.

Expression in aerial photographs: Much is valley bottom, much is subdued intermediate topography in which ridges follow resistant sandstones. Ridges are composed largely of smooth, unribbed slopes suggesting clayey materials and are held up by resistant light-toned bands (sandstone) that are 10 to almost 100 ft in width, most less than 50 ft. Most crests are intermediate; less abundant hard crests have unribbed flanks.

Composition: Mudstone and siltstone, lesser sandstone and claystone or shale, and minor limestone as nodules and beds. Mudstone and siltstone are similar in physical properties and probably show gradational differences in silt content; much may be somewhat siliceous (Anderson and Pack, 1915). Sandstone varies from very fine grained and fine-grained rock, which is generally interbedded with mudstone and siltstone, to medium- and coarse-grained arenite that is moderately(?) to moderately well sorted and in which some beds are calcite cemented or concretionary, although most are not cemented.

Unit is probably largely mudstone of varying silt content that grades to lesser fine-grained and very fine grained sandstone. Blocks and outcrops suggest minor to locally some cemented sandstone interbeds scattered through section. Strong ridges are underlain by very thick concretionary sandstone beds; some weak ridges are underlain by interbedded sandstone, siltstone, and mudstone.

Unit is called predominately siltstone with minor shale, claystone, and sandstone (Brabb and others, 1971), but our field observations are not detailed enough to detect significant differences with unit 673, which is called predominantly shale and claystone with minor siltstone and sandstone (Brabb and others, 1971). Expression in aerial photographs suggests largely relatively resistant silty and clayey rock, probably largely siltstone or somewhat siliceous rock, but poor exposures conceal proportions. Thus, we consider the unit largely siltstone and mudstone, some interbedded sandstone, some claystone or shale, and minor limestone. Some sandstone is calcite cemented.

Hardness: Mudstone, siltstone, and fine-grained sandstone are firm where fresh and weathered. Medium- to coarse-grained sandstone is largely firm where weathered and probably where fresh, but some hard cemented rock extends to the ground surface. Limestone hard.

Bedding: Probably indistinct bedding of gradational lithologies in clayey rock; lesser fine- and very fine grained sandstone has indistinct to distinct beds, thin to thick were observed. Blocks and outcrops suggest minor to locally some cemented sandstone interbeds, medium to thick, scattered through section. Strong ridges are underlain by very thick (as much as 30-ft or more) sandstone beds that contain concretions as large as 10 ft in diameter; some weak ridges are underlain by thin to thickly interbedded sandstone, siltstone, and mudstone.

Parting: No good observation in most of unit. Probably present at close to moderate spacing in clayey rock. Parting is good on distinct bedding planes, less certain within clayey rock. Largely absent within very thick sandstone.

Fracture: In mudstone and siltstone, close to very close spacing of weathering fracture, probably on moderate to wide original spacing. Spacing in sandstone largely moderate to wide, ranging from close to 4 ft. Limestone nodules and blocks to medium.

Permeability: Intergranular permeability of mudstone and siltstone very low to low, probably some or more is low; much sandstone low approaching moderate, much moderate, some very low to low (where cemented); limestone very low. Thus, intergranular permeability of most bedrock very low to low, minor to some moderate. Probably some shallow bedrock has low fracture permeability. Most mantle very low, some moderate.

Weathering: Sandstone crops out or produces blocks where cemented, otherwise weathered to depths greater than 15 ft.

Surficial mantle: Largely clayey, some granular. Most of unit is covered by alluvium. Mantle is granular on ridges, clayey on low-lying ground.

Expansivity: Most bedrock expansive, probably much severely expansive; some unexpansive. Most mantle severely expansive; some unexpansive to significantly expansive. Samples: AS33A, sandy clay soil, typical, free swell 120 percent; AS32, well-cracked clay soil, free swell 110 percent. Sandy soil on ridges is unexpansive to significantly expansive.

Stratigraphic thickness: 300-1,500 ft (Brabb and others, 1971).

Sources: Anderson and Pack, 1915; Brabb and others, 1971; Briggs, 1953b; Colburn, 1961, 1964; Payne, 1951, 1960; Snow, 1957; three stations.

MAP UNIT 673

Geologic unit, (age), and location: Moreno Formation, lower shale and claystone member (K), east of Mount Diablo.

Summary: Largely mudstone and shale; some sandstone underlies resistant ridges. Some of sandstone is calcite cemented and hard, much sandstone has moderate intergranular permeability. Most mantle and probably much bedrock severely expansive.

Expression in aerial photographs: In most places, largely underlies alluvium in valley bottom (more so than unit 672), but as much as half of unit underlies intermediate ridges. Ridges have smooth slopes that lack ribbing and are held up by resistant light-toned bands 10 to almost 100 ft in width, most less than 50 ft; most have intermediate crests, some have hard crests and unribbed flanks. In other places, almost entirely subdued intermediate topography that lacks ribbing, interrupted by resistant ridges.

Composition: Most is mudstone, shale, and siltstone; lesser fine-grained and very fine grained sandstone. Much mudstone and shale may be somewhat siliceous (Anderson and Pack, 1915). Includes some medium- to coarse-grained sandstone, arenite, moderately(?) well sorted, some of which is calcite cemented or concretionary. Minor limestone nodules and beds.

Unit is called predominantly shale and claystone with minor siltstone and sandstone (Brabb and others, 1971). Our field observations are not sufficient to distinguish this unit from supposedly siltier unit 672, but combined data suggest that unit is largely mudstone and shale, some siltstone and fine-grained sandstone, some very thick bedded sandstone (mostly medium to coarse grained), minor scattered limestone. Strong ridges are underlain by very thick sandstone (some of unit), weak ridges by thin to thickly interbedded sequences of sandstone, siltstone, and mudstone (some of unit). Some sandstone is calcite cemented.

Hardness: Mudstone, shale, siltstone, and most sandstone are firm where fresh and weathered. Some sandstone is hard and calcite cemented. Limestone is hard.

Bedding: Unknown in most of unit (mudstone and shale). Some sandstone beds are very thick (as much as 30 ft or more), some (largely fine-grained sandstone) are medium to thick interbedded with thin to medium mudstone and siltstone, all distinct.

Parting: Probably present at close spacing, ranging from very close to moderate, in mudstone and shale (most of unit). In sandstone intervals, along distinct bedding planes at both close to wide and very wide spacing.

Fracture: In mudstone, shale, and siltstone, probably close to very close spacing of weathering fracture on moderate to wide original spacing. Spacing in sandstone largely moderate to wide, ranging from close to 4 ft; cemented sandstone moderate to wide. Limestone blocks and nodules to medium.

Permeability: Intergranular permeability very low in mudstone, shale, and much(?) fresh siltstone, low in most siltstone. Sandstone has much of both low and moderate intergranular permeabilities, but low to very low where cemented. Thus, intergranular permeability of bedrock largely very low, some low, some moderate. Probably some shallow rock (much of mudstone and shale) has low fracture permeability. Most mantle very low, some moderate.

Surficial mantle: Largely clayey, some granular. Granular soil over sandstone on ridges.

Expansivity: Most bedrock expansive, probably much severely expansive; some to much unexpansive. Most mantle severely expansive, some unexpansive to significantly expansive. Samples: AS33B, dark clay soil, moderately to well cracked, typical at this station, free swell 130 percent; AS34, fluffy sandy clay soil, typical of clayey soil, free swell 110 percent; AS44, silty clay soil on mudstone, typical at this station, free swell 84 percent. Sandy soil on ridges is less expansive.

Stratigraphic thickness: 300-2,000 ft (Brabb and others, 1971).

Sources: Anderson and Pack, 1915; Brabb and others, 1971; Briggs, 1953b; Colburn, 1961, 1964; Payne, 1951, 1960; Snow, 1957; three stations.

MAP UNIT 674

Geologic unit, (age), and location: Panoche Formation, shale interbeds in Joaquin Ridge Sandstone Member of Goudkoff (1945) (K), east of Mount Diablo.

Summary: Poorly exposed swale-forming unit. Most to almost all is mudstone intervals, but includes minor to locally some sandstone, much of which may be cemented, in beds to very thick. Blasting likely in some very thick sandstone interbeds. Some sandstone has moderate permeability. Probably most mantle severely expansive.

Expression in aerial photographs: Largely smooth, unribbed intermediate topography, uniformly dark-toned except for minor to locally some light-toned resistant bands that are mostly less than 10 ft in width, one 70 ft in width. On west side of Canada de los Poblanos, unit forms prominently smooth, unribbed band through ribbed hard unit 650, but includes a few light-toned resistant bands about 10 ft in width and one (possibly within unit 650) almost 100 ft in width.

Composition: Mudstone containing some interbedded siltstone and laminated fine- to medium-grained sandstone, herein called mudstone intervals. Minor shale. Includes minor to locally some interbedded sandstone that is medium to coarse grained, largely clean, well sorted, largely arenite (Colburn, 1964), about half calcite cemented, containing concretions.

Most to almost all of unit is mudstone intervals. Interbedded sandstone generally constitutes less than 10 percent of unit, but increases near contacts with unit 650 to constitute some of unit.

Hardness: Mudstone intervals are firm where fresh and weathered. Interbedded sandstone is firm (much friable with difficulty) where not cemented, hard where cemented (about half?). Concretions hard.

Bedding: No observations of typical rock of unit, which is probably mudstone containing indistinctly interbedded siltstone and distinctly interbedded laminated sandstone that probably ranges from very thin to medium between very thin to very thick mudstone. Sandstone interbeds are distinct and as thick as 10 ft or more, and minor intervals of dominant sandstone are as thick as 70 ft or more. Near contacts with unit 650, intervals of sandstone and mudstone intervals are very thick (5 to 12 ft or more). Concretions are mostly large, but as much as 5 ft in diameter.

Parting: Probably largely at close spacing, some moderate, in mudstone intervals. Mudstone is slightly fissile. Minor shale is fissile. Present at distinct bedding contacts; absent within very thick sandstone interbeds.

Fracture: No observations. Mudstone intervals probably have largely close to very close spacing of weathering fracture on moderate to wide original spacing. Sandstone interbeds fractured at close to 5 ft.

Permeability: Intergranular permeability of mudstone intervals very low to lesser low; of sandstone about half very low to low (where cemented), half moderate to low (where not cemented). Thus, intergranular permeability of bedrock is largely very low, some low; possible good (moderate permeability) aquifers constitute approximately 5 percent of unit. Much shallow bedrock probably has low (locally moderate in cemented sandstone) fracture permeability. Most to almost all mantle very low to low.

Weathering: Sandstone where uncemented is probably weathered to depths greater than 15 ft. Some sandstone scales where weathered and some develops close to wide fracture parallel to ground surface within about 10 ft of ground surface. Probably some mudstone is fissile at ground surface, but weathers in blocky mudstone fashion below depths of a few feet.

Surficial mantle: Most to almost all clayey. Typical soil is probably similar to that over Cretaceous mudstone. Much of unit may be covered by granular soil similar to sample AS35, free swell 50 percent (exaggerated), that has moved downslope from adjacent higher unit 650.

Expansivity: Probably most bedrock expansive, largely significantly expansive. Most to almost all mantle expansive, probably largely severely expansive. See samples BHS18 and BHS1A of unit 650.

Sources: Colburn, 1961, 1964; Goudkoff, 1945; Snow, 1957; two stations.

MAP UNIT 675

Geologic unit, (age), and location: Marlife Shale of Payne (1962), upper shale and siltstone member (K), near Mount Diablo.

Summary: Largely siltstone, mudstone, and shale; minor to some interbedded sandstone, much of which is calcite cemented. Most mantle severely expansive.

Expression in aerial photographs: To north, most of unit is fairly nonresistant and forms swales, but much is light toned and much is ribbed on steep slopes; top 300 ft or so is dark toned and lacks ribbing. Toward south, unit is uniform, unbanded, ribless intermediate topography that shows light-toned spots on shoulders. In most places, unit includes minor light-toned resistant bands (sandstone), most less than 10 ft in width, some as wide as 50 ft or locally 100 ft, some of which form hogbacks; in places, these light-toned bands are interbedded with dark-toned zones 200-300 ft in width. Infer much siltstone (light tone, nonresistant), lesser shale (dark tone, nonresistant), minor sandstone.

Composition: Largely siltstone, mudstone, and shale; less abundant clayey very fine grained sandstone and interbeds of sandstone. Interbeds of sandstone are largely fine to medium grained, moderately to well sorted, of low to moderate intergranular permeability; grains are angular to subangular and consist of more feldspar than quartz; much sandstone is cemented or partially cemented by calcite, and much contains concretions cemented by calcite.

Unit is probably largely siltstone (inferred from aerial photographs), much mudstone and shale, minor to some interbedded sandstone.

Hardness: Mudstone, shale, siltstone, and sandstone are firm where weathered, except some sandstone is soft where well weathered. Cemented sandstone hard, weathering firm to hard; concretions hard, some weather firm.

Bedding: Poor exposures, but fairly consistent impression of thin to medium distinctly to indistinctly interbedded rock, largely mudstone, shale, siltstone, and clayey fine sandstone, including distinct thin beds of sandstone. Within such sequences are minor to some distinct sandstone beds that are medium to very thick (mostly less than 5 ft, some as much as 10 ft or more). Aerial photographs show some sandstone bodies 50-100 ft in width. Cemented sandstone beds are thick to 5 ft and crop out.

Parting: Probably very close to moderate spacing throughout unit except in thick and very thick sandstone.

Fracture: Close to very close spacing of weathering fracture in siltstone, mudstone, shale, and clayey fine sandstone. Interbedded sandstone has moderate to wide spacing where firm, wide to very wide (4-ft) spacing where cemented. Concretions mostly to large and unfractured, but as much as 6 ft in diameter (Snow, 1957).

Permeability: Intergranular permeability of most siltstone low; mudstone, shale, and much(?) fresh siltstone very low; sandstone low to moderate, much of each, but very low where cemented and in some(?) fresh sandstone. Thus, intergranular permeability of bedrock is largely low to very low, probably much of each, minor moderate. Probably some low fracture permeability in shallow bedrock. Most mantle very low.

Weathering: Sandstone weathered to depths greater than 10 ft.

Surficial mantle: Largely clayey. Soil is fairly uniform.

Expansivity: Most bedrock unexpansive to significantly expansive, some(?) severely expansive. Most mantle severely expansive. Samples: D17, typical clayey subsoil or weathered bedrock, free swell 82 percent; CL27, mildly cracked sandy clay soil, typical, free swell 116 percent; BHS17A, typical moderately cracked clayey soil, free swell 125 percent; BHS17B, moderately cracked clayey soil, free swell 100 percent (exaggerated); AS39, silty and sandy clay soil, may be contaminated by sand from upslope, free swell 54 percent (exaggerated).

Stratigraphic thickness: About 2,000 ft maximum (Brabb and others, 1971).

Sources: Brabb and others, 1971; Colburn, 1961, 1964; Payne, 1960; Snow 1957; four stations.

MAP UNIT 676

Geologic unit, (age), and location: Marlife Shale of Payne (1962), lower shale and siltstone member (K), near Mount Diablo.

Summary: Almost all is clayey rock consisting of shale, mudstone, and siltstone; minor to some sandstone, some cemented. Most to almost all mantle severely expansive.

Expression in aerial photographs: Mostly subdued intermediate topography, but includes some resistant bands of light tone that are 10-100 ft in width. Largely dark in tone, soft, smooth, some subtly banded.

Composition: Largely shale and siltstone, very probably including mudstone; less abundant sandstone. Sandstone is fine to medium grained, well to moderately well sorted, some to much clean, some to much dirty and flakey. Some clean sandstone is cemented by calcite.

Shale, siltstone, and mudstone constitute 80-90 percent of unit, these probably being about equally abundant (although only shale and siltstone seen in field); 10-20 percent is sandstone, most as thin beds. Less than 10 percent of unit is sandstone in medium to very thick beds.

Hardness: Shale and siltstone have firm pieces where weathered. Sandstone firm where weathered, hard where cemented.

Bedding: Distinctly to indistinctly interbedded rock. Generally looks like flysch and consists of repetitive thin sandstone beds between medium to thick shale and siltstone. Shale and siltstone largely in medium indistinct beds; sandstone distinct, mostly thin, some medium, less commonly to thick or very thick (10-100 ft). Cemented sandstone to medium or more; beds in distant view of outcrops that are probably cemented sandstone are as thick as 4 ft.

Parting: Good parting within most clayey rock at close to very close spacing. Also on distinct bedding contacts.

Fracture: Close to very close spacing of weathering fracture in clayey rock; sandstone fractured at spacing similar to bed thickness. Spacing in hard sandstone is moderate to wide, locally as much as 4 ft in very thick beds.

Permeability: Intergranular permeability very low in shale and mudstone, very low to low in siltstone; sandstone largely low, some moderate, but

very low where cemented and in some(?) fresh rock; thus, about 60 percent of bedrock very low, 35 percent low, about 5 percent moderate (much of clean sandstone may be cemented). Probably much shallow bedrock has low fracture permeability. Almost all mantle very low.

Weathering: Weathering fracture developed to depths greater than 10 ft.

Surficial mantle: Almost all clayey.

Expansivity: Most bedrock is unexpansive to significantly expansive, some(?) may be severely expansive. Most to almost all mantle severely expansive. Sample BHS14, mildly to moderately cracked silty clay soil, typical, free swell 111 percent. Minor to some soil may be more expansive. See samples for unit 677.

Stratigraphic thickness: About 1,400 ft maximum (Brabb and others, 1971).

Sources: Brabb and others, 1971; Colburn, 1961, 1964; Payne, 1960; Snow, 1957; one station.

MAP UNIT 677

Geologic unit, (age), and location: Marlife Shale of Payne (1962), mappable sandstone interbeds in lower shale and siltstone member (K), near Mount Diablo.

Summary: Probably largely mudstone and siltstone, much sandstone. About half of sandstone has moderate intergranular permeability. Probably much mantle severely expansive.

Expression in aerial photographs: Forms hogback having hard to intermediate crest between units 676 and 679.

Composition: Mudstone and siltstone interbedded with sandstone. Sandstone is well to moderately well sorted, largely medium grained, wacke to arenite (Colburn, 1964). Much sandstone is clean; much has minor clayey matrix evidenced by flaking, especially near tops of very thick beds. Some to much of sandstone is calcite cemented, both as beds and concretions. Possibly minor conglomerate. Clayey rock is largely silty mudstone, some siltstone. Rare limestone nodules in mudstone.

Consistent impression that unit is about one-third sandstone, two-thirds mudstone and siltstone; sandstone constitutes as much as half of rock in many zones.

Hardness: Sandstone, mudstone, and siltstone are firm where weathered, probably firm where fresh, except cemented sandstone is hard. Limestone nodules hard.

Bedding: Sandstone beds are distinct, medium to very thick (as much as 15 ft), between thick to very thick (50-ft) intervals of clayey rock that contain some medium sandstone beds. Exposure in resistant nose shows 6- to 8-ft sandstone beds between 15- to 25-ft mudstone and siltstone intervals. Some indistinct interbedding of more and less silty mudstone at medium to thick. Much sandstone laminated near tops of beds.

Parting: Present at distinct bedding contacts, within many sandstone beds, and at close to moderate spacing in most of mudstone and siltstone.

Fracture: In firm sandstone, close to wide spacing, mostly moderate. In cemented sandstone, spacing ranges from moderate to very wide (6 ft), depending on thickness of cemented beds; spacing is moderate to wide in much cemented rock, but in places abundant very large blocks. Mudstone and siltstone have close to very close spacing of weathering fracture on moderate, possibly wide, original fracture spacing. Spherical concretions as large as 6 ft in diameter.

Permeability: Intergranular permeability of mudstone and siltstone largely very low, much(?) siltstone low where weathered; sandstone moderate to low, much of each, except very low where cemented and in some(?) fresh rock. Thus, bedrock has about one-sixth moderate intergranular permeability, one-sixth or more low, two-thirds very low. Much low fracture permeability in shallow bedrock. Most mantle very low to low, some moderate.

Weathering: Most rock is weathered to depths greater than 15 ft, but cemented sandstone fresh to near ground surface.

Surficial mantle: Largely clayey, some granular. Clayey soil is fairly uniform sandy and silty clay.

Expansivity: Most bedrock unexpansive, much may be significantly expansive. Most mantle expansive, probably much severely expansive; some unexpansive. Samples: BHS4, typical clay soil, free swell 100 percent; BHS13, sandy-silty clay soil, mildly cracked, typical, free swell 90 percent (exaggerated).

Sources: Briggs, 1953b; Colburn, 1961, 1964; Payne, 1960; Snow, 1957; four stations.

MAP UNIT 678

Geologic unit, (age), and location: Great Valley sequence, unnamed sandstone and shale, undivided (K); only near Mount Diablo.

Summary: Largely flysch of mudstone, shale, and thin sandstone; some to locally dominant medium to very thick sandstone. Some sandstone beds cemented. Some to possibly much of both bedrock and mantle is severely expansive.

Expression in aerial photographs: Includes both hard topography and rounded intermediate topography, distinctly different, much of each. Some intermediate topography has resistant (sandstone) beds as wide as about 10 ft between about 100-ft dark-toned intervals of clayey rock.

Composition: (1) Sandstone, mostly fine to medium grained, minor to some coarse grained; moderately to moderately well sorted; grains angular to subangular; largely wacke (Colburn, 1964) in which clay plus silt range from 6-32 percent, much 10-20 percent (Briggs, 1953b), matrix plus lithics about 60 percent (Colburn, 1964); more feldspar than quartz; biotite generally 3-5 percent. Some sandstone is calcite cemented and hard, both as beds and concretions, but most is clay cemented. (2) Flysch consisting of mudstone and shale, generally interrupted by thin interbeds of sandstone. (3) Conglomerate of pebbles to small boulders (average 4-6 in. in diameter, some as large as 12 in.) in sandstone matrix, typically 40 percent clasts, 60 percent matrix; clasts break free of matrix and consist of well-rounded igneous and metamorphic clasts and angular sedimentary clasts. Some conglomerate is porous, most is hard and has fossiliferous matrix (Snow, 1957). (4) Unit probably includes white vitric tuff bed reported by Colburn (1962, 1964).

On the whole, unit is probably largely flysch (composition 2), 25-35 percent or less sandstone; however, unit includes intervals of dominant sandstone that are as thick as 100 ft, as well as intervals of dominant mudstone. Zones of hard topography may have more than 35 percent sandstone. Flysch includes much of both mudstone and shale, minor to some sandstone. Minor conglomerate. Some sandstone is calcite cemented. Probably one bed of vitric tuff.

Hardness: Sandstone ranges from firm to hard, much quite firm, where weathered; probably largely quite firm to hard where fresh; ringing hard where cemented. Mudstone and shale are firm to hard where fresh and weathered; pieces probably are not durable. Conglomerate has hard clasts in matrix that is largely hard where fresh and weathered. Vitric tuff probably firm.

Bedding: Distinct sandstone interbedded with clayey rock. Thickness of sandstone beds variable, generally less than 4 ft, most medium to thick, but some, locally dominant, very thick (mostly 10- to 20-ft, but as much as 50-ft) beds. In flysch, repetitive sandstone interbeds are thin to medium between dominant mudstone and shale. Colburn (1964) reported sandstone beds ranging from 0.5 in. to 10 ft thick, averaging 4 in. Beds of clayey rock have a range of thickness similar to sandstone. Cemented sandstone beds and concretions mostly less than 4 ft, many thick, but hard beds as thick as 20 ft in places. Conglomerate beds mostly less than 5 ft, rarely more than 20 ft, lenticular, occur in groups. All bedding is lenticular at map scale. Vitric tuff in one 30-ft bed.

Parting: Present on distinct bedding planes, most at moderate to wide spacing; within mudstone at very close to moderate spacing; within shale at very close spacing; and within many sandstone beds, one or so per bed.

Fracture: In uncemented sandstone, spacing is similar to bed thickness in thin to medium beds, in very thick beds, spacing is as great as 6 ft,

much moderate to wide. Cemented sandstone has mostly wide spacing, but as much as 5 ft. Some dirty sandstone has close to very close spacing of weathering fracture on moderate to wide original spacing. Mudstone and shale have probably moderate original spacing and close to very close spacing of weathering fracture.

Permeability: Intergranular permeability of sandstone largely low to locally moderate, very low where cemented and in much(?) fresh rock; mudstone and shale very low; conglomerate very low to locally moderate. Thus, intergranular permeability of bedrock largely very low, some to much low, minor moderate. Much to most of unit has low fracture permeability in shallow rock. Most mantle low to very low, some moderate.

Weathering: Sandstone is weathered to depths greater than 8 ft, but where cemented it is fresh to outcrop or near outcrop. Spheroidal weathering and weathering fracture occur in some sandstone, notably near south side of Mount Diablo. Some shale fresh at depth of 6 ft.

Surficial mantle: Largely clayey, some granular. Near south side of Mount Diablo, uniform sandy clay soil, such as sample D18B; near east side of Mount Diablo, light-brown sandy clay soil, such as sample TJ6. Granular mantle over zones of dominant sandstone.

Expansivity: Most bedrock and mantle expansive, some to possibly much of each severely expansive, some of each unexpansive. Samples: D18A, typical weathered shale, mildly cracked, free swell 90 percent; D18B, mildly cracked sandy clay soil, typical, free swell 67 percent (exaggerated); TJ6, mildly cracked sandy clay soil, typical at this station, free swell 97 percent (exaggerated). See samples for unit 679.

Stratigraphic thickness: Maximum 9,000 ft (Brabb and others, 1971).

Sources: Brabb and others, 1971; Briggs, 1953b; Colburn, 1962, 1964; Snow, 1957; Turner, 1891; six stations.

MAP UNIT 679

Geologic unit, (age), and location: Great Valley sequence, predominantly shale unit in unnamed sandstone and shale (K), only near Mount Diablo.

Summary: Almost all is clayey rock or flysch of clayey rock interbedded with thin sandstone; 10-20 percent is sandstone in medium to 6-ft beds. Except for sandy soils on sandstone ridgetops, almost all bedrock and mantle is expansive.

Expression in aerial photographs: Intermediate topography that is largely smooth, rounded, and somewhat lumpy; subdued with respect to unit 621. Most lacks ribs. Local light-toned bands, hogback character, and ridges in otherwise subdued topography indicate intervals of sandstone. Medium photographic tone. Banding, where present, is generally very subdued, largely 10- to 20-ft light-toned zones between dark-toned zones as wide as 100 ft or more, but in places shows pronounced light-toned resistant bands 50-100 ft in width.

Composition: (1) Mudstone intervals, consisting of mudstone that is variably silty, some siltstone in places, and lesser fissile-weathering rock (shale); in many places includes some regularly interbedded thin to medium beds of silty fine-grained sandstone, forming flysch. (2) Sandstone, wacke to arenite, largely medium to fine grained, moderately well sorted, much clean, much silty, minor clayey enough to scale where weathered. Of sandstone, some, locally most, is calcite cemented.

Sandstone makes up about one-third, mudstone two-thirds, of most cuts, but proportion of sandstone in unit as a whole is probably less than one-third, perhaps 10-20 percent.

Hardness: Mudstone is firm where weathered, approaching hard where fresh; siltstone has firm to hard pieces; sandstone is largely firm to quite firm where weathered, probably quite firm to hard where fresh, hard to outcrop where calcite cemented. Weathered mudstone can be scraped by fingernail, not hard durable pieces.

Bedding: Mudstone intervals may be internally indistinctly very thin to medium bedded; many have distinct thin to medium sandstone beds between medium to thick, some very thick, intervals of clayey rock. Mudstone intervals are as thick as 100 ft or more; indeed, most of unit is a mudstone interval. Sandstone interbeds (excluding thin sandstone in flysch) range from medium to 6 ft, but may be as thick as 10 ft, and aerial photographs show isolated resistant zones of sandstone as thick as 100 ft. Interbedded sandstone occurs in various styles, from medium sandstone repetitively interbedded with medium mudstone to isolated very thick sandstone bodies, but generally tends to occur in zones of abundant sandstone. Sandstone beds are broadly lenticular.

Parting: Present on distinct bedding planes; within mudstone intervals at very close to moderate spacing; and within some sandstone at close to moderate spacing, especially near tops of beds. Some mudstone develops fissility near the ground surface, but beneath the surface it remains nonfissile. Truly fissile rock is minor.

Fracture: In mudstone and siltstone, close to very close spacing of weathering fracture, probably on close to moderate original spacing. Sandstone, including cemented rock, fractured generally at spacing similar to bed thickness, most moderate to 4 ft, much wide.

Permeability: Intergranular permeability of mudstone intervals largely very low, some low; sandstone largely low, some approaching moderate, minor to possibly some moderate, except very low where calcite cemented and in some(?) fresh rock. Thus, intergranular permeability of most bedrock very low, some low, minor may be moderate. Much shallow bedrock (cemented sandstone and much mudstone) has low fracture permeability. Almost all mantle very low to low, much or more very low; minor to some moderate.

Weathering: Free clay present in weathered rock. Sandstone weathered to depths greater than 25 ft except where cemented.

Surficial mantle: Almost all clayey, minor to some granular. Fluffy silty clay soil, like sample BHS7, is typical for most of unit observed except granular soil over sandstone on ridge tops.

Expansivity: Almost all bedrock may be expansive, probably largely significantly expansive; some unexpansive. Almost all mantle expansive, much of this severely expansive, minor to some unexpansive. Samples: BHS5A, well-cracked sandy clay subsoil, more expansive than most, minor, free swell 107 percent; BHS5B, moderately cracked sandy clay soil, more expansive than most, free swell 130 percent; BHS7, mildly cracked silty clay soil, typical, free swell 93 percent (exaggerated); BHS9, very mildly cracked silty clay soil, free swell 110 percent. Sample BHS7 probably represents typical expansivity of weathered mudstone. See samples for unit 678.

Sources: Colburn, 1962, 1964; Snow, 1957; seven stations.

MAP UNIT 680

Geologic unit, (age), and location: Great Valley sequence, unnamed shale (equivalent to unit Ks? of source map) (K), only west of Clayton, northwest of Mount Diablo.

Summary: Briefly seen in field. Probably largely flysch of mudstone and shale containing minor interbedded sandstone; about 10 percent very thick intervals of dominant sandstone. Hard sandstone, hard to firm mudstone and shale. Much to most bedrock and probably most mantle significantly expansive. See unit 681.

Expression in aerial photographs: Largely resistant intermediate topography, most regularly ribbed; largely intermediate crests, some hard crests. Characterized by crests and some slopes that are light toned against drainages that are dark toned. Topography is controlled by bedding, but banding is largely subtle, locally pronounced. Light-gray and dark-gray subtle bands, most from less than 10 ft to 50 ft in width, some of each as wide as 100 ft, are about equally abundant. Much of unit shows gray banded tone, some pronounced light tone, some pronounced dark tone; these tones suggest flysch, siltstone, or clayey sandstone (gray), hard sandstone (light), and shale or sheared clayey rock (dark). Of pronounced light-toned bands, 10 percent are more than 10 ft in width, probably very thick sandstone beds or zones of dominant sandstone.

Composition: (1) Flysch of medium- to fine-grained, low permeability sandstone interbedded with mudstone and shale. (2) Lesser thick and very

thick beds of sandstone. (3) Clayey sandstone and siltstone (not seen in field, suggested by expression in aerial photographs).

About 90 percent of unit is nonresistant material, probably largely flysch of dominant mudstone and shale between beds of sandstone, but possibly much siltstone or clayey sandstone. Sandstone makes up about 10 percent of flysch. Very thick zones of dominant sandstone make up about 10 percent of unit. Of mudstone and shale, half or more is shale.

Hardness: Sandstone hard where weathered and fresh; mudstone and shale have hard to firm pieces where weathered and fresh.

Bedding: Flysch consists of distinct thin to medium, rarely thick, beds of sandstone repetitively interbedded with thin to 6-ft intervals of mudstone and shale. Much mudstone and shale is laminated, and many sandstone beds are laminated. Most very thick sandstone beds and zones of dominant sandstone range from less than 10 ft to as much as about 50 ft thick, locally as much as 100 ft.

Parting: Probably present in most of unit at very close to moderate spacing; at very close spacing in shale (about half), at very close to moderate spacing in mudstone (about half). Present at distinct bedding planes and within many sandstone beds. Absent only in thick to very thick sandstone.

Fracture: In sandstone at spacing similar to bed thickness (largely close to moderate). Mudstone and shale have close to very close spacing of weathering fracture on original moderate, possibly wide, spacing.

Permeability: Intergranular permeability of sandstone low to very low, mudstone and shale very low. Thus, intergranular permeability of most bedrock probably very low, minor to possibly some low. Most shallow bedrock has low fracture permeability. Probably most mantle low.

Weathering: Mudstone and shale fresh (dark) at depth of 4 ft.

Surficial mantle: Probably largely clayey, possibly much granular. Not nearly as clayey as adjacent Nortonville Shale (unit 438).

Expansivity: Much to most bedrock significantly expansive. Probably most mantle significantly expansive, some may be severely expansive. Samples: CL3A, typical mudstone, free swell 70 percent; CL3C, clayey soil, free swell 69 percent (exaggerated). See sample for unit 681.

Stratigraphic thickness: At least 4,000 ft (Brabb and others, 1971).

Sources: Brabb and others, 1971; Colburn, 1961, 1964; Taff, 1935; Turner, 1891; one station.

MAP UNIT 681

Geologic unit, (age), and location: Great Valley sequence, unnamed shale (K), only in Marsh Creek area near Mount Diablo.

Summary: Largely flysch of mudstone, shale, and minor interbedded sandstone; some zones of abundant to dominant sandstone in beds largely to thick, some as thick as 10 ft or more. Some calcite-cemented sandstone crops out. Most mantle significantly expansive.

Expression in aerial photographs: Intermediate topography; much bumpy, some regular that has occasional sharp, hard crests. Some light-toned bands as wide as 10 ft, dark-toned bands as wide as 100 ft or more.

Composition: (1) Mudstone and shale, about equally abundant; most has blocky fracture but becomes nearly fissile near ground surface. (2) Siltstone. (3) Sandstone, largely medium to fine grained, wacke, low permeability. (4) Calcite-cemented concretions and beds in sandstone. (5) Calcareous beds in shale (Turner, 1891).

Unit is largely flysch of mudstone and shale that contains some siltstone and minor sandstone interbeds; some sandstone, largely in zones of abundant to dominant sandstone. Some of unit is cemented sandstone; minor calcareous beds in shale.

Hardness: Mudstone, shale, and siltstone are largely firm where weathered, firm to hard(?) where fresh. Sandstone is firm to quite firm where weathered; some or more is firm approaching soft where fresh, probably most firm to hard where fresh. Cemented sandstone (some of unit) is hard, weathers spheroidally to firm.

Bedding: Mudstone, shale, and siltstone are indistinctly interbedded in very thin to medium beds. Sandstone occurs as thin to medium distinct beds in flysch and as medium to very thick (as much as 10-ft or more, most less than 4-ft) distinct beds that occur largely in zones of abundant to dominant sandstone that are tens of feet thick. Cemented beds to very thick; concretions to large.

Parting: Present in mudstone and shale at very close to moderate spacing. Also present on sandstone bedding contacts, largely at close to wide spacing.

Fracture: Mudstone and shale have very close to moderate spacing of weathering fracture, probably on moderate to wide original spacing. Sandstone in thin to thick beds has fracture spacing similar to bed thickness. Thick to very thick sandstone has moderate to wide, some as much as 5-ft, original spacing, and some has close to moderate spacing of weathering fracture superimposed. In all, most spacing in sandstone is moderate. Spacing in cemented rock is moderate to wide or more.

Permeability: Intergranular permeability very low in mudstone and shale, low to very low in sandstone and siltstone. Thus, intergranular permeability of most bedrock very low, minor to some low. Most shallow bedrock has low fracture permeability. Most mantle low to possibly very low, minor to some moderate.

Weathering: Sandstone weathered to depth of 35 ft. Some cemented sandstone weathers spheroidally. One station shows uncommon weathering of sandstone: rock is firm, nearly soft, where fresh, but firm to quite firm where weathered; much scaly weathering fracture in fresh rock, absent in weathered. These weathering effects seem inverted, like those observed in unit 624.

Surficial mantle: Largely clayey, minor to some granular. Clayey soil typical on most of unit, loam soil on zones of abundant sandstone.

Expansivity: Probably most bedrock unexpansive, much may be significantly expansive. Most mantle significantly expansive, minor to some unexpansive. Sample AS46, brown clayey soil, typical of most of unit, free swell 66 percent. See samples for unit 680.

Stratigraphic thickness: At least 4,000 ft (Brabb and others, 1971).

Sources: Brabb and others, 1971; Colburn, 1961, 1964; Taff, 1935; Turner, 1891; three stations.

MAP UNIT 682

Geologic unit, (age), and location: Great Valley sequence, unnamed unit (K), only east of Livermore Valley near Tesla. Includes Horsetown Formation of Huey (1948).

Summary: Not seen in field. Dominantly hard shale, similar to Franciscan shale (unit 702), containing sandstone and limestone concretions; see descriptions of units 702 and 685-687 for likely physical properties. Minor to some fine-grained sandstone, probably similar to Franciscan sandstone, but nature of interbedding is unknown because the sandstone occurs in a separate, fault-bounded block not shown on our map. Easternmost body on our map is reported to be shale containing concretions; western body on our map was mapped by Huey as Franciscan, and so may include both shale and sandstone similar to Franciscan assemblage. Unit probably includes some clayey sheared rock.

Permeability: Intergranular permeability of almost all bedrock very low. Most shallow bedrock has low fracture permeability. Probably most mantle low, some(?) very low.

Surficial mantle: Largely clayey.

Expansivity: Most bedrock unexpansive to possibly significantly expansive, some probably severely expansive (sheared rock). Probably most mantle significantly expansive, some probably severely expansive.

Stratigraphic thickness: 500 ft maximum (Huey, 1948).

Source: Huey, 1948.

MAP UNIT 683

Geologic units, (age), and location: Great Valley sequence, unnamed formations (KJ) and undivided rocks (K), only between Napa Range and Yolo Range and at north end of the East Bay Hills near Martinez.

Summary: Almost all is flysch, but includes minor to some scattered medium to very thick (as much as 50-ft or more) sandstone beds that occur in zones; intervals of dominant sandstone as thick as 100 ft or more. Minor to some bedrock and much mantle are severely expansive.

Composition: Largely laminated to thin-bedded mudstone, siltstone, shale, and laminated sandstone, herein called mudstone intervals; medium to very thick mudstone intervals are repetitively interbedded with thin to less commonly medium sandstone beds. This repetitively bedded rock, here called flysch, is the typical rock of this unit. Scattered throughout flysch are zones in which sandstone constitutes much to most of the rock. Most sandstone is very fine to medium grained, poorly to moderately sorted, and has intergranular matrix sufficient to largely fill pores; some sandstone, however, is medium to coarse grained and some approaches well sorted. Some sandstone is calcite cemented and much contains scattered concretions. Mudstone generally weathers spheroidally, but some is poorly fissile, and much develops fissility superimposed on spheroids where weathered. Unit rarely includes very thick (as much as 20-ft) beds of claystone. Weaver (1953) reported that 80 percent of this unit in the Martinez area consists of shale, siltstone, and sandstone beds as much as 6 in. thick. Weaver (1953) also cited minor conglomerate lenses 5-25 ft thick of well-rounded pebbles and cobbles as large as 3 in. in diameter, locally cobbles and boulders as large as 1 ft in diameter.

Almost all of unit (80-95 percent) is flysch; minor to some (5-20 percent) is scattered medium to very thick sandstone beds.

Hardness: Where fresh, sandstone is hard and mudstone intervals have hard to firm rock mass of hard pieces. Where weathered, sandstone is hard to firm, but calcite-cemented sandstone and concretions are hard, and mudstone intervals have firm to soft rock mass of firm to hard pieces.

Bedding: Flysch is repetitively bedded by distinct thin to less commonly medium sandstone beds between medium to very thick mudstone intervals consisting of indistinctly laminated to thin-bedded clayey rock. Sandstone also occurs in distinct, medium to very thick beds (as much as 50 ft or more), but generally sandstone beds are less than 10 ft thick; these sandstone beds mostly occur in zones rather than as isolated beds within flysch. These zones commonly consist of medium to thick sandstone beds between thin to thick flysch; intervals of dominant sandstone are as thick as 100 ft or more. Conglomerate lenses very thick (5-25 ft).

Parting: In flysch at close to very close spacing, rarely moderate. Where abundant sandstone, at contacts between sandstone and mudstone, which are mostly at moderate to wide spacing, rarely very wide.

Fracture: Mudstone intervals where fresh have moderate to wide spacing that is generally perpendicular to bedding, but weathering produces additional close to very close spacing that is about perpendicular to bedding and to parting that develops parallel to bedding where weathered. Thin to thick sandstone beds have fracture about perpendicular to bedding at spacing similar to bed thickness or closer. Very thick sandstone beds show fracture of irregular orientation at spacing that is mostly moderate to 4 ft but as great as bed thickness.

Permeability: Intergranular permeability of flysch very low where fresh, very low to low where weathered; sandstone low to locally moderate, except much(?) very low where fresh. Thus, intergranular permeability of almost all fresh bedrock very low, of almost all weathered bedrock very low to low. Much shallow bedrock has low fracture permeability. Most mantle very low, some low, minor to some moderate.

Weathering: Variable free clay in bedrock. Mudstone intervals and flysch typically are more shallowly weathered than thick and very thick sandstone beds. Weathering of flysch varies from depths of a few feet to more than 20 ft, of sandstone from depth of 5 ft to generally more than 15-20 ft.

Surficial mantle: Almost all clayey, minor to some granular (on sandstone).

Expansivity: Most bedrock is unexpansive to significantly expansive, minor to some severely expansive. Much mantle severely expansive, much significantly expansive, minor unexpansive. Bedrock samples: SN4, weathered mudstone, slightly cracked, free swell 49 percent; SN7, weathered claystone, mildly cracked, free swell 50 percent; PC3, shale, mildly cracked, typical at this station, free swell 100 percent; BN2, popcorn claystone, typical of some of unit at this station, free swell 133 percent; BN4, sheared mudstone, mildly cracked, free swell 118 percent. Surficial mantle samples: MD10, typical clayey soil on unit Kgvs of source map, mildly cracked, free swell 90 percent; BN1, clay soil, moderately cracked, free swell 125 percent; BN5, silty clay soil, free swell 104 percent; RU5, cracked clay soil on unit KJgvm of source map, not typical, free swell 96 percent; WS11, cracked clay soil, typical on unit KJgvm of source map, free swell 89 percent; BN6A, sandy clay soil, minor, moderately cracked, free swell 91 percent; BN6B, typical clay soil on unit Ku of source map, mildly cracked, free swell 73 percent. Soil is typically mildly cracked, but minor to some beds and zones are more highly cracked.

Stratigraphic thickness: North of Carquinez Strait, as much as 7,000 ft; 5,000 ft near Martinez.

Sources: Lawson, 1914; Sims and others, 1973; Tolman, 1931; Weaver, 1949, 1953; 30 stations.

MAP UNIT 684

Geologic unit, (age), and location: Great Valley sequence, siltstone and minor sandstone unit (KJ), north and west of Santa Rosa in Mendocino highlands and Mayacmas Mountains.

Summary: Largely mudstone and shale, lesser flysch and sandstone. Almost all bedrock and mantle is unexpansive to significantly expansive.

Composition: Mudstone, shale, siltstone, and some sandstone. In exposures observed, dominant composition is intermediate between shale and mudstone; the rock has mudstone fracture, but is finely laminated in many places and develops a fissility where weathered. Unit includes some to much flysch of siltstone, shale, and fine-grained sandstone; some sequences of fine-grained sandstone as thick as 50 ft; and a few very thick beds of poorly sorted, well-cemented, medium- to coarse-grained arkosic sandstone that contains much matrix and forms prominent ridges. Minor conglomerate like unit 604 and a few beds of limestone are also present. Gealey (1951) described this unit (his Knoxville Formation) in Healdsburg 15' quadrangle as consisting mostly of shale and siltstone.

Unit is largely mudstone, shale, and siltstone; some sandstone; minor conglomerate and limestone.

Hardness: Mudstone, shale, siltstone, and fine sandstone firm. Very thick sandstone beds largely hard, some firm. Calcite-cemented sandstone hard.

Bedding: Clayey rock is mostly laminated, but includes some blocky mudstone in beds as thick as 3 ft. Fine sandstone and siltstone beds in flysch are thin to medium (as much as 6 in.); some fine sandstone beds to thick, in sequences as thick as 40 ft or more. Medium- to coarse-grained arkosic sandstone beds are very thick (as much as 50 ft?). Minor medium beds of calcite-cemented fine sandstone.

Parting: Very close spacing of parting in weathered shale and mudstone; close to very close spacing in fine sandstone.

Fracture: Mudstone, shale, and interbedded fine sandstone have close to moderate original spacing; beds predominantly of fine sandstone have moderate original spacing. Weathering of mudstone, siltstone, shale, and fine sandstone produces a weathering fracture at very close spacing. Very thick beds of medium- to coarse-grained sandstone have moderate to very wide spacing.

Permeability: Very low intergranular permeability in mudstone, siltstone, shale, and much fresh sandstone; largely low in weathered sandstone. Thus, intergranular permeability of most bedrock very low, some low. Most shallow rock has low fracture permeability. Most mantle low, some moderate.

Weathering: Fine sandstone is weathered to depths of more than 15 ft; clayey rock variable, but weathered to depths of more than 5-10 ft. Weathering softens rock and develops parallel parting and weathering

fracture, both in the weathered zone and rather rapidly on surfaces of roadcuts.

Surficial mantle: Largely clayey. Silty and sandy clay soils, mildly to moderately cracked, cover most of unit; soils on sandstone are more granular and less cracked.

Expansivity: Probably almost all bedrock unexpansive, much may be significantly expansive. Almost all mantle unexpansive to significantly expansive. Samples: HL10, uncracked sandy stony soil on massive sandstone, free swell 66 percent (exaggerated?); GY13, mildly cracked soil on mudstone, typical, free swell 55 percent; HL12, mildly cracked sandy clay soil on flysch, free swell 50 percent; HL9, well-cracked soil on landslide material, free swell 60 percent; HL5, uncracked silty soil, typical, free swell 37 percent; HL6, thin stony silty clay(?) soil on mudstone, free swell 52 percent.

Sources: Blake and others, 1971; Gealey, 1951; 10 stations.

MAP UNIT 685

Geologic units, (age), and location: Upper part of Knoxville Formation (Robinson, 1956) (J); part of shale unit (KJ), only near Niles District of Fremont; in the East Bay Hills between Hayward and Fremont.

Summary: Most is shale, mudstone, and siltstone; minor to some sandstone; minor limestone. Some to much bedrock is soft to firm clayey sheared material, remainder hard. Probably some bedrock and much mantle severely expansive.

Expression in aerial photographs: Semiresistant intermediate topography, unribbed.

Composition: (1) Shale grading to mudstone and siltstone; most is sandy, some argillaceous, some contains isolated pebbles, locally silicified. Much is shale, which weathers to platy very small pieces; much is mudstone and siltstone, which weathers spheroidally. (2) Sandstone similar to that described for unit 635. (3) Limestone, fine grained, in loaf-shaped lentils. (4) Clayey sheared rock.

Most to almost all of unit is composition 1; minor to some sandstone. Limestone present in minor amounts throughout section; Robinson (1956) reported limestone to be abundant. Some to much clayey sheared rock.

Hardness: Shale, mudstone, siltstone, and limestone are hard where fresh and weathered. Sandstone hard where fresh, firm to hard where weathered. Clayey sheared rock firm to soft, depending on wetness. Shale is locally silicified and used for fill and road metal (Robinson, 1956).

Bedding: Shale, mudstone, and siltstone are mostly in thick to very thick (as much as 10-ft or more) beds, indistinct to distinct; limestone thin to medium; most sandstone beds thin to medium, some to very thick. See unit 687.

Parting: Variable. In shale, very close spacing where weathered; in mudstone and siltstone, wide to very wide, probably largely very wide. Present along sandstone contacts at close to very wide spacing. Thus, much of unit has good very close parting, but probably only in weathered rock (see unit 689); much has poor to absent parting.

Fracture: Clayey rock has close to very close spacing of weathering fracture on probably close to moderate spacing of original fracture (inferred from unit 689). Limestone and most sandstone have close to moderate spacing.

Permeability: Intergranular permeability very low in mudstone, shale, most siltstone, sheared rock, much sandstone, and limestone; low in much sandstone and some siltstone. Thus, most bedrock has very low intergranular permeability, minor to some low. Most shallow rock has low fracture permeability. Most to almost all mantle very low to low.

Weathering: See units 686 and 689.

Surficial mantle: Most to almost all clayey. Uncracked to minor mildly cracked silty and sandy clay soil over uncracked to lesser mildly cracked clayey subsoil, such as sample HAY14.

Expansivity: Most bedrock unexpansive to possibly significantly expansive, some probably severely expansive (sheared rock). Almost all mantle expansive, probably much severely expansive (subsoil). Samples: HAY14, typical clayey subsoil, uncracked, free swell 95 percent; NL20, typical mildly cracked sandy clay soil, free swell 73 percent.

Stratigraphic thickness: 500 ft near Niles (Hall, 1958); 1,500 ft to possibly 2,500 ft in Hayward 7.5' quadrangle (Robinson, 1956).

Sources: Anderson, 1933; Hall, 1958; Robinson, 1956; three stations.

MAP UNIT 686

Geologic unit, (age), and location: Knoxville Formation (J), between Napa Range and Yolo Range and near Mount Diablo.

Summary: Not seen in field near Mount Diablo. Almost all is mudstone and shale; minor sandstone; rare conglomerate, limestone, and tuff. Mudstone and shale are hard where fresh. Almost all mantle significantly expansive.

Composition: Almost all is mudstone and shale, commonly silty and sandy. Shale is crudely fissile, whereas mudstone develops spheroidal weathering fracture; unit includes much of both shale and mudstone, most rock being intermediate between truly fissile shale and blocky mudstone. Includes minor to some sheared rock and gouge; minor fine-grained sandstone, limestone, and pebble conglomerate; minor tuff and tuffaceous sandstone in places near base.

Hardness: Mudstone and shale pieces are hard where fresh, hard to firm within 10 ft of ground surface; weathered rock mass is firm owing to fracture and parting. Sandstone, tuff, conglomerate, and limestone are hard where fresh and weathered, but rare tuff(?) beds weather to soft, sticky clay.

Bedding: Mudstone and shale are indistinctly very thin to thin bedded. Sandstone, conglomerate, tuff, and limestone beds are distinct and prominent against uniform clayey rock. Sandstone, conglomerate, and tuff beds are thin to very thick (4 ft), mostly medium to thick; limestone beds thin to medium. See unit 687.

Parting: Roughly parallel parting at very close spacing in shale and in much of mudstone where weathered. Present also at distinct bedding contacts.

Fracture: Mudstone and shale have close to moderate spacing of original fracture and very close spacing of weathering fracture, in addition to very close parting where weathered. Sandstone, tuff, conglomerate, and limestone have close- to wide-spaced fracture perpendicular to bedding.

Permeability: Intergranular permeability of mudstone and shale very low, of some tuff to moderate, sandstone to low. Thus, intergranular permeability of almost all bedrock very low, minor low to moderate. Almost all shallow rock has low fracture permeability. Almost all mantle low.

Weathering: Greatest effect is development of very close fracture and parting. Pieces of mudstone and shale largely remain hard where weathered, but some are softened to firm. Weathering effects extend to depths greater than 10 ft.

Surficial mantle: Almost all clayey. Silty clay soil, such as sample WS4, is typical.

Expansivity: Almost all bedrock is unexpansive to possibly significantly expansive, minor to some severely expansive (gouge and soft tuff). Most mantle significantly expansive, probably some severely expansive. Samples: WS4, typical mildly cracked silty clay soil, free swell 53 percent; AES2, well-cracked gouge associated with serpentine, free swell 78 percent.

Stratigraphic thickness: Near Napa Range and Yolo Range, 3,000 ft (Clark, 1948); near Mount Diablo, 3,000 ft or more (Brabb and others, 1971).

Sources: Anderson, 1933; Brabb and others, 1971; Clark, 1948; Colburn, 1961; Sims and others, 1973; Turner, 1891; four stations.

MAP UNIT 687

Geologic unit, (age), and location: Mudstone and siltstone unit (KJ), near Oakland. Includes rocks previously mapped as Knoxville Formation by some workers.

Summary: Not seen in field. Most to almost all is mudstone and shale, commonly silty and sandy. Includes minor to some sandstone and minor limestone and conglomerate. Most mantle significantly expansive. Described as low-lying, swale-forming unit.

Composition: Most to almost all is mudstone and shale, commonly silty and sandy. Shale is crudely fissile, whereas mudstone develops spheroidal weathering fracture. Radbruch (1969) described unit as fissile shale; Lawson and Palache (1902) reported spheroidal weathering as typical. Unit probably includes much of both shale and mudstone, most rock being intermediate between truly fissile shale and blocky mudstone. Includes some clayey sheared rock; minor to some fine- to medium-grained sandstone; minor limestone as beds and concretions, both fine grained and some coarse grained that includes fossil debris; minor pebble conglomerate of two types, one having matrix of hard sandstone, the other having matrix of shale or siltstone; rare lignite; and iron oxide concretions.

Hardness: Mudstone and shale pieces are hard where fresh, hard to firm within 10 ft of ground surface; weathered rock mass is firm owing to fracture and parting. Sandstone, conglomerate, and limestone probably largely hard where fresh and weathered.

Bedding: Lawson (1914) reported that shale is evenly laminated; Case (1963) described shale as thin bedded. Some sections are entirely shale and mudstone; others have distinct interbedded sandstone in beds that are mostly thin to medium, but thick in places, between unknown thicknesses of mudstone and shale. In places, unbedded mudstone or shale as thick as 50 ft or more. Limestone beds and concretions to thick. Lignite in thin to medium beds. Limonite concretions to medium.

Parting: Very close spaced, roughly parallel parting in shale and much of mudstone where weathered. Present also at contacts with sandstone and limestone.

Fracture: Mudstone and shale have close to moderate original spacing and very close spacing of weathering fracture, in addition to very close parting where weathered. Sandstone, conglomerate, and limestone have close- to wide-spaced fracture perpendicular to bedding.

Permeability: Very low intergranular permeability in shale and mudstone, low to very low in sandstone, conglomerate, limestone, and lignite; thus, almost all bedrock very low. Most shallow bedrock has low to locally moderate fracture permeability. Most mantle low, probably some to much very low.

Weathering: Greatest effect is development of very close fracture and parting. Pieces of mudstone and shale largely remain hard where weathered, but some are softened to firm clayey materials. Weathering extends to depths greater than 10 ft; Radbruch (1969) reported that weathering is irregular and extends to depths greater than 20 ft in places.

Surficial mantle: Almost all clayey. Silty clay soil is typical.

Expansivity: Almost all bedrock is unexpansive to possibly significantly expansive, probably some severely expansive (sheared rock). Most mantle significantly expansive, probably some to much severely expansive. See samples for units 685-689.

Stratigraphic thickness: At least several thousand feet (Case, 1963).

Sources: Anderson, 1933; Case, 1963, 1968; Lawson, 1914; Lawson and Palache, 1902; Radbruch, 1969.

MAP UNIT 688

Geologic unit, (age), and location: Shale unit (KJ), in the East Bay Hills between Fremont and Oakland and near Dublin.

Summary: Probably largely shale and mudstone, as described for units 685 and 687; includes some to possibly equally abundant sandstone, as described for unit 635, and lesser but possibly some conglomerate, as described for unit 616. Probably some clayey sheared rock. See these other units for description of composition and physical properties.

Expression in aerial photographs: In large body near Union City, fairly resistant intermediate topography that is clearly banded by light-toned resistant zones and dark-toned nonresistant zones, about equally abundant; bands are 10-400 ft in width and include all intermediate scales of interbedding. In other areas, intermediate topography.

Permeability: Intergranular permeability of bedrock largely very low, minor to some low. Most shallow rock has low to locally moderate fracture permeability. Most mantle low to very low.

Surficial mantle: Largely clayey.

Expansivity: Most bedrock unexpansive to possibly significantly expansive, probably some severely expansive (sheared rock). Most mantle expansive, probably much of this severely expansive. Sample NWK1, well-cracked pebbly clayey soil, typical, free swell 78 percent. See samples for unit 685.

Sources: Anderson, 1933; Case, 1963, 1968; Hall, 1958; Lawson, 1914; Lawson and Palache, 1902; Radbruch, 1969; Robinson, 1956; one station.

MAP UNIT 689

Geologic unit, (age), and location: Predominantly shale unit (KJ), in Diablo Range southeast of San Jose and in Santa Cruz Mountains near Mount Umunhum and Mount Madonna. Includes Knoxville Formation of Crittenden (1951).

Summary: Not seen in field near Mount Umunhum. Largely shale and mudstone; some interbedded sandstone. Locally much to most is sandstone. Some firm to soft clayey sheared rock, remainder of bedrock is largely hard where fresh and weathered. Most mantle is significantly expansive.

Expression in aerial photographs: In Diablo Range, hard to intermediate topography, about half ribbed. Prominent long strike ridges suggest interbedded sandstone present in greater amounts than observed at stations, which are in a strike canyon. Some of unit shows subdued banding at about 30-ft intervals, equally abundant light and dark tones.

Composition: Shale, mudstone, and siltstone, largely shale and mudstone; this material has good parting down to very close spacing, so we consider it largely shale. Includes lesser interbedded fine- to medium-grained sandstone; medium- to coarse-grained moderately sorted sandstone, some of which is calcite cemented; fossiliferous limestone and limey concretions; brittle siliceous siltstone; conglomerate; and clayey sheared rock. Near Thompson Creek, southeast of San Jose, includes minor altered andesite (see unit 200).

Unit is largely flysch of some sandstone in dominant clayey rock, but locally sandstone is dominant. Some clayey sheared rock. Other compositions minor.

Hardness: Shale, mudstone, siltstone, siliceous siltstone, limestone, and sandstone pieces are hard where fresh, largely hard where weathered. Clayey sheared rock firm to soft.

Bedding: Shale, mudstone, and siltstone are laminated; sandstone, limestone, and siliceous siltstone commonly occur as distinct thin to medium beds and lenses interbedded with shale. In exposures examined, thick to very thick (6-ft or more) sandstone beds are minor, but these may be more abundant on ridges.

Parting: Present at distinct bedding contacts (close to very wide spacing) and within weathered clayey rock at very close to close spacing, some moderate. In fresh rock, parting occurs only along bedding and shear zones; fresh shale breaks in fracture-bounded blocks.

Fracture: Shale and mudstone have close to moderate original spacing and close to very close spacing of weathering fracture. Sandstone and limestone have close to moderate spacing, rarely wide in sandstone.

Permeability: Very low intergranular permeability in all bedrock compositions, except some of sandstone (minor to some of unit) low. Most shallow rock has low (to possibly moderate) fracture permeability, interrupted by very low permeability of sheared clayey zones. Most mantle low, some very low.

Weathering: Pieces of shale are fresh to within 5 ft of ground surface. At depth of 25 ft, some parting is open, some tight but weak. Fracture permeability extends to depth of 25 ft or more.

Surficial mantle: Largely clayey. Most is uncracked, some very mildly cracked; some mildly cracked clay subsoil, such as sample MGH1.

Expansivity: Most bedrock is unexpansive to possibly significantly expansive, minor to some severely expansive (sheared rock). Most mantle significantly expansive, some severely expansive (subsoil). Sample MGH1, mildly cracked clay subsoil, free swell 80 percent, covers some of unit. Most mantle appears less expansive.

Sources: Anderson, 1933; Crittenden, 1951; McLaughlin and others, 1971; Templeton, 1912; three stations.

MAP UNIT 700 Unsheared Franciscan sandstone and shale

Geologic unit, (age), and location: Hard topography in melange of the Franciscan assemblage (KJ) and in sandstone and shale of the Franciscan assemblage (KJ), as determined by interpretation of aerial photographs; in Marin highlands.

Summary: Largely unsheared sandstone interbedded with shale; may include some shattered sandstone and minor clayey sheared rock. Minor expansive bedrock and surficial mantle.

Composition: Most to almost all is sandstone (graywacke) interbedded with shale (including siltstone); minor pebble and cobble conglomerate that has sandstone matrix. Unit may include some shattered or brecciated sandstone (like unit 803) and minor sheared rock, chert, and greenstone (like equivalent materials in units 800, 511, and 253, respectively).

Hardness: Where fresh, sandstone is hard and shale has firm rockmass of hard pieces. Where weathered, sandstone is firm to soft in thinner beds and firm to hard in thicker beds, shale is firm to soft. Conglomerate clasts are hard to firm, matrix firm to soft where weathered.

Bedding: Sandstone beds are distinct, largely continuous, of varying thickness and proportion of interbedded shale, and occur in two major habits: (1) flysch of repetitive thin to medium beds in abundant to predominant interbedded shale (as in unit 702); and (2) thick to very thick (commonly 10- to 30-ft, but as much as 100-ft or more) beds between thin to very thick (50- to 100-ft) sequences of flysch. Conglomerate sequences mostly as thick as tens of feet, locally as thick as hundreds of feet.

Parting: At contacts between sandstone and shale, and at very close spacing within shale.

Fracture: In sandstone, mostly close to moderate spacing, but as much as very wide (6 ft) in some very thick sandstone beds; common close to very close spacing of incipient fracture that becomes effective in weathered rock. In weathered shale, very close to close, locally moderate, fracture spacing. Conglomerate has wide to very wide (4-ft) spacing in very thick beds.

Permeability: Intergranular permeability of bedrock largely very low, possibly some low (in some sandstone). Low to locally moderate fracture permeability in almost all shallow rock. Most mantle moderate, some low, minor very low.

Surficial mantle: Largely granular, minor to some clayey.

Expansivity: Bedrock and surficial mantle are largely unexpansive, minor expansive materials in each (clayey sheared rock and overlying mantle). See samples for unit 701.

Stratigraphic thickness: Hundreds to thousands of feet.

Sources: Blake and others, 1971, 1974; Ellen and others, 1972; many stations.

MAP UNIT 701 Franciscan sandstone and shale

Geologic units, (age), and location: Sandstone and shale of the Franciscan assemblage (KJ), throughout region. Includes: unit gwy of source map only south of Sausalito and Marin Headlands State Park in Marin County; unit KJfss of source maps in Marin and Mendocino highlands; units fs and fcg of source maps in most of Santa Cruz Mountains; unit KJfm of source maps in Diablo Range; and units fs, fs_1, and fs_2 of source map in northern Mayacmas Mountains.

Summary: Largely sandstone and shale, much unsheared, much variably sheared, including some clayey gouge and severely sheared rock that may contain hard blocks. Bedrock and surficial mantle are largely unexpansive, but some of each (sheared rock and clayey soil) is expansive.

Composition: Largely sandstone (graywacke) and shale (including siltstone); minor pebble and cobble conglomerate that has sandstone matrix. Much of unit is largely unsheared (like unit 700), much is variably sheared (like unit 803), some is clayey gouge and severely sheared rock that may contain hard blocks (like unit 800). Largely unsheared in Marin County south of Sausalito.

Hardness: Where fresh, most rock is hard, but gouge and severely sheared rock are firm to soft. Where weathered, sandstone is firm to hard in thicker beds, firm to soft in thinner beds; shale is firm to soft; gouge and severely sheared rock is soft, blocks hard; conglomerate clasts are hard to firm.

Bedding: Sandstone beds are distinct, of varying thickness and proportion of interbedded shale, and occur in two major habits: (1) flysch of repetitive thin to medium beds in abundant to predominant interbedded shale (as in unit 702); and (2) thick to very thick (commonly 10- to 30-ft, but as much as 100-ft or more) beds between thin to very thick (50- to 100-ft) sequences of flysch. Conglomerate sequences mostly as thick as tens of feet, locally as thick as hundreds of feet. Shears interrupt continuous bedding in much rock.

Parting: At contacts between sandstone and shale, and at very close spacing within shale and severely sheared shale.

Fracture: In sandstone, mostly close to moderate spacing, but wide to very wide (6 ft) in some thick to very thick sandstone beds; common close to very close spacing of incipient fracture that becomes effective in weathered rock. In weathered shale, close to very close, locally moderate, fracture spacing. Conglomerate has wide to very wide (4 ft) spacing in very thick beds. Variably spaced shear surfaces present in many places, including very close in severely sheared rock; hard blocks generally 1-50 ft in diameter.

Permeability: Intergranular permeability of bedrock largely very low, possibly some low (in sandstone); fracture permeability in most shallow rock low, some moderate, very low in clayey gouge. Most mantle moderate, some low, some very low.

Surficial mantle: Largely granular, some clayey (largely on clayey gouge and severely sheared shale).

Expansivity: Bedrock largely unexpansive, some expansive (sheared rock). Surficial mantle largely unexpansive, some expansive (where clayey over sheared rock).

Bedrock samples of Franciscan sandstone and shale: MM6, coarse-grained sandstone, free swell 54 percent; WO8, sandstone, free swell 83 percent; SFN4, weathered graywacke, free swell 59 percent; PB2A, altered graywacke, free swell 52 percent; BO11, weathered shale about 1 ft from ground surface in unit unit 803, free swell 42 percent; BO23, sandstone breccia in unit 803, free swell 44 percent; BO21, sheared shale in unit 803, free swell 42 percent; BO22, sand-clay matrix from sheared rock in unit 803, free swell 40 percent; WO9, sheared shale, free swell 68 percent. See samples for unit 801.

Samples of surficial mantle on Franciscan sandstone and shale: PRN1A, clayey to silty grassland soil on unsheared flysch of unit 700, free swell 30 percent; PRN1B, silty woodland surficial soil on unsheared flysch of unit 700, free swell 38 percent; PRN1C, silty woodland subsoil on unsheared flysch of unit 700, free swell 35 percent; SG15A, colluvium on unit 803, below soil, free swell 54 percent; SG15B, soil on colluvium on unit 803, free swell 56 percent; WO16, mildly cracked clay soil, free swell 60 percent; SFS8, gravelly clay soil on shale, moderately cracked, free swell 60 percent; SFS9, uncracked gravelly clay soil on ridge, free swell 69 percent; MM10 (not plotted on sample location map), soil on sandstone and shale, free swell 68 percent; SM7, soil on graywacke, free swell 70 percent. See samples for unit 801.

Stratigraphic thickness: Hundreds to thousands of feet.

Sources: Blake and others, 1971, 1974; Cotton, 1972; Ellen and others, 1972; McLaughlin, 1978; many stations.

MAP UNIT 702 Flysch-like Franciscan shale and sandstone

Geologic units, (age), and location: Shale and sandstone of the Franciscan assemblage (KJ), in Diablo Range and Santa Cruz Mountains. Consists of unit KJfss of source map in Diablo Range and unit rh of source map in Santa Cruz Mountains.

Summary: Not seen in field where mapped. Largely flysch consisting of shale and interbedded sandstone, much variably sheared. Bedrock and mantle is largely unexpansive, some of each expansive (sheared rock and overlying clayey mantle).

Expression in aerial photographs: In Diablo Range, largely hard topography that is well ribbed, but some intermediate topography of broad slopes that lack ribs.

Composition: Interbedded shale (including siltstone) and sandstone, the shale abundant to generally predominant; local conglomerate. Much rock is variably sheared, including some clayey gouge and severely sheared shale that may contain hard blocks (like unit 800).

Hardness: Fresh sandstone is hard, fresh shale has firm rock mass of hard pieces. Most weathered rock is firm to soft. Conglomerate clasts are hard to firm; gouge and severely sheared shale are firm to soft, blocks hard.

Bedding: Distinct, commonly thin to medium sandstone beds regularly interbedded with very thin to thick, rarely very thick (10-ft), intervals of shale, minor to some sequences of thick to very thick (10- to 30-ft or more) sandstone beds. Shears obliterate continuous bedding in much rock.

Parting: In most shale at very close spacing, and at distinct bedding planes.

Fracture: In weathered shale at very close to close, locally moderate, spacing. In sandstone, mostly close to moderate spacing, but wide to very wide (6 ft) in local thick-bedded to very thick bedded sandstone, and common close to very close spacing of incipient fracture that becomes effective in weathered rock. Variably spaced shear surfaces are present in many places, including very close in severely sheared rock; hard blocks generally 1-50 ft in diameter.

Permeability: Bedrock has very low intergranular permeability; low fracture permeability in most shallow rock, but very low in clayey gouge. Most mantle low, some moderate, some very low.

Surficial mantle: Largely granular, some to much clayey.

Expansivity: Bedrock is largely unexpansive, some expansive (sheared rock). Surficial mantle is largely unexpansive, some expansive (where clayey over sheared rock). See samples for unit 701.

Stratigraphic thickness: Hundreds to thousands of feet.

Sources: Cotton, 1972; similar materials observed at several stations within units 700 and 701.

MAP UNIT 703 Franciscan metamorphic rocks, largely unsheared

Geologic units, (age), and location: Metamorphic rocks of the Franciscan assemblage (KJ), chiefly metagraywacke, in northern half of region. Consists of much of unit KJfm of source maps throughout northern part of region, as determined by interpretation of aerial photographs; and unit fms of source map in northern Mayacmas Mountains.

Summary: Largely metagraywacke interbedded with lesser metashale. Much of unit is unsheared, much is variably sheared, some is clayey gouge and severely sheared rock that may contain hard blocks. Some expansive bedrock and surficial mantle.

Composition: Largely metagraywacke interbedded with lesser metashale, minor masses of metagreenstone and metachert. Metagraywacke is similar to graywacke of unit 701 except that most is foliated, generally semischist of slight to moderate metamorphic fabric (textural zone 2 of Blake and others, 1967), locally schist (textural zone 3 of Blake and others, 1967). Much of unit is unsheared (like unit 700), much is variably sheared (like unit 803), some is clayey gouge and severely sheared rock that may contain hard blocks (like unit 800).

Hardness: Where fresh, most rock is hard, but gouge and severely sheared rock is firm to soft. Where weathered, metagraywacke is largely firm, metashale firm to soft, metagreenstone firm to hard, metachert firm rock mass of hard pieces, blocks in severely sheared rock hard.

Bedding: Distinct to indistinct, largely thin to thick beds of metagraywacke between thinner beds or partings of metashale, but some very thick (10- to 30-ft or more) beds of metagraywacke. Metagreenstone is unbedded to indistinctly bedded; metachert distinctly bedded, commonly in thin beds between lesser ferruginous metashale. Shears interrupt continuous bedding in much rock.

Parting: Metagraywacke has characteristic slabby parting along foliation at very close to close, in places moderate, spacing; foliation parallels bedding in most places. Parting also along distinct bedding planes, and in metashale at very close spacing.

Fracture: Metagraywacke commonly is fractured at close to moderate spacing, in places at wide spacing, both where fresh and weathered. Metashale and metachert have largely close to very close spacing; metagreenstone close to moderate. Variably spaced shear surfaces are present in many places, including very close in severely sheared rock; hard blocks generally 1-50 ft in diameter.

Permeability: Intergranular permeability of bedrock very low; fracture permeability in shallow rock largely low, some moderate, some very low (in clayey gouge). Most mantle moderate, some low, some very low.

Surficial mantle: Largely granular, some clayey (largely on gouge and severely sheared rock).

Expansivity: Bedrock is largely unexpansive, some expansive (sheared rock). Surficial mantle largely unexpansive, some expansive (where clayey). Bedrock samples: SQ2, weathered bedrock in landslide, free swell 95 percent; SQ4, gouge, free swell 78 percent; SQ3, gouge, free swell 95 percent. Surficial mantle samples: SQ7, sandy soil on unsheared metagraywacke, free swell 40 percent; SQ5, soil near severely sheared rock, free swell 85 percent. See samples for unit 802.

Stratigraphic thickness: Hundreds to thousands of feet.

Sources: Blake and others, 1967, 1971, 1974; McLaughlin, 1978; several stations.

MAP UNIT 704 Undivided Franciscan rocks

Geologic unit, (age), and location: Franciscan assemblage, undivided (KJ), in southern half of region.

Summary: In most places, largely sandstone and shale (like unit 701), probably containing much of other rock types, such as sheared rock, greenstone, chert, and serpentinite (like units 800, 253, 511, and 805, respectively). On Mount Diablo, unit is largely greenstone (like unit 253) and chert (like unit 511), but includes some sandstone (like unit 701) and minor other rock types. See descriptions of units listed above for physical properties.

Permeability: Intergranular permeability of bedrock very low; probably most has low to moderate fracture permeability in shallow rock. Probably most mantle moderate, some to much low to very low.

Surficial mantle: Probably largely granular, some to much clayey.

Expansivity: Most bedrock unexpansive, some to much(?) expansive (sheared rock). Probably most mantle unexpansive, some to much expansive (where clayey). Sample SFN2, colluvium more than 20 ft thick from chert, greenstone, and graywacke, free swell 79 percent. See samples for units 701, 801, 253, 511, and 805.

Sources: Pampeyan, 1963; many stations.

MAP UNIT 800 Franciscan gouge and severely sheared shale with blocks

Geologic units, (age), and location: Severely sheared rocks of the Franciscan assemblage (KJ), throughout region. Consists of soft topography

in Marin highlands, as determined by interpretation of aerial photographs, and high-grade metamorphic rock in places throughout region.

Summary: Clayey gouge and severely sheared rock containing variably abundant blocks and small shattered masses of various rock types. Gouge and severely sheared rock are firm to soft, most blocks are hard. Most bedrock and surficial mantle is expansive, some of each severely expansive.

Composition: Clayey gouge and severely sheared rock containing variably abundant blocks and small shattered masses of sandstone and shale, greenstone, chert, limestone, serpentinite, schist, gneiss, and other rock types, like units 701, 253, 511, 909, 805, 802, and 911, respectively. Blocks (diameter less than 100 ft) and small shattered masses (as much as 0.1-0.2 mile in length) commonly constitute some to much of unit.

Hardness: Gouge and severely sheared rock are firm to soft, soft where weathered; most blocks are hard, some firm where weathered. Masses of sandstone and shale, chert, greenstone, and schist are generally as hard or harder than equivalent materials of units 701, 511, 253, 911, and 802.

Bedding: Largely absent; small shattered masses of sandstone and shale, chert, greenstone, and schist are bedded like equivalent materials of units 803, 511, 253, 911, and 802.

Parting: Very closely spaced, crudely parallel parting along shears in severely sheared rock; parting also in some small shattered masses, as described for equivalent materials of units 701, 511, 253, 911, and 802.

Fracture: Shear surfaces have very close spacing in severely sheared rock. Blocks generally are 1-50 ft in diameter and are fractured at moderate to very wide spacing, but fractures are ineffective in many blocks. Fracture spacing is close to moderate in most rock composing small shattered masses.

Permeability: Bedrock has very low intergranular permeability; low to locally moderate fracture permeability in most blocks and small shattered masses, but very low in clayey gouge. Most mantle low to very low.

Surficial mantle: Largely clayey. Clayey over sheared matrix, granular over most small shattered masses, stony or absent on outcropping blocks.

Expansivity: Most bedrock and surficial mantle is expansive, some of each severely expansive. See samples for unit 801.

Stratigraphic thickness: Tens to hundreds of feet.

Sources: Ellen and others, 1972; many stations.

MAP UNIT 801 Franciscan melange, largely of clastic rocks

Geologic unit, (age), and location: Melange of the Franciscan assemblage (KJ), throughout region, except where subdivided by interpretation of aerial photographs in Marin highlands.

Summary: Much to most of unit is matrix of clayey gouge and severely sheared rock containing abundant hard blocks and small shattered masses of various rock types; some to most is larger masses of sandstone and shale. Much bedrock is expansive (where sheared), much surficial mantle is expansive (where clayey).

Composition: Much to most of unit is matrix of gouge and severely sheared rock that contains variably abundant hard blocks and small shattered masses of various rock types (like unit 800); some to most is larger masses of sandstone and shale (like unit 701). Blocks (diameter less than 100 ft) and small shattered masses (as much as 0.1-0.2 mile in length) constitute as much as half of the rock mass, exclusive of larger coherent masses; these larger masses may be as long as 1 mile or more and constitute some to most of the unit in different places. Much of both small and large masses are variably sheared (like unit 803); much to most of larger masses are unsheared (like unit 700). Unit locally includes sheared serpentinite (like unit 805) and masses of greenstone (like unit 253). In San Mateo County, gouge and severely sheared rock make up about one-fourth of unit.

Hardness: Gouge and severely sheared rock are firm to soft, soft where weathered; most blocks hard. Sandstone and shale are hard where fresh; weathered sandstone is firm to hard in thicker beds and firm to soft in thinner beds, weathered shale is firm to soft.

Bedding: Absent in severely sheared rock, interrupted or obliterated in variably sheared rock. In sandstone and shale masses, sandstone beds are distinct, vary in thickness and proportion of interbedded shale, and occur in two major habits: (1) flysch of repetitive thin to medium beds in abundant to predominant interbedded shale (as in unit 702); and (2) thick to mostly very thick (commonly 10- to 30-ft, but as much as 100-ft or more) beds between thin to very thick (50- to 100-ft) sequences of flysch.

Parting: Shears define very close, crudely parallel parting in severely sheared rock. In sandstone and shale masses, parting at distinct bedding planes and at very close spacing within shale.

Fracture: Very closely spaced shear surfaces in severely sheared rock; blocks generally 1-50 ft in diameter, some fractured at moderate to very wide spacing. In sandstone, spacing ranges from generally close and moderate to as much as very wide (6 ft) in some very thick sandstone beds; common close to very close incipient fracture becomes effective in weathered rock. In shale, very close to close, locally moderate, fracture spacing in weathered rock. Close to widely spaced shear surfaces in much sandstone and shale.

Permeability: Intergranular permeability of almost all bedrock very low, some possibly low (in sandstone). Fracture permeability largely low, some moderate, in much to most shallow bedrock (masses of sandstone and shale and other rock types); very low in clayey sheared rock. Much mantle low to very low, much moderate.

Surficial mantle: Much clayey (largely over severely sheared rock), much granular.

Expansivity: Much bedrock expansive (sheared rock), much unexpansive. Much mantle expansive (where clayey over sheared rock), much unexpansive.

Bedrock samples of Franciscan melange: I12, brecciated sandstone, free swell 35 percent; SM14, weathered bedrock and colluvium(?) that shows badlands erosion, free swell 50 percent; I6B, weathered shale, free swell 92 percent; SM10, shale(?), free swell 48 percent; NV3, sheared shale, free swell 82 percent; BO13, sheared shale, free swell 68 percent; SG13, clayey melange matrix, free swell 77 percent; P5A, sheared shale, free swell 75 percent; P5C, bedrock, free swell 70 percent; P5D, gouge, free swell 83 percent; P5E, sheared shale, free swell 65 percent; P5F, sheared shale that contains discrete pieces of shale, free swell 50 percent; I13, gouge, free swell 70 percent; SG22C, sheared shale, free swell 85 percent; MM8, sheared shale in melange, free swell 92 percent; MM20, fault gouge between unit fsr of source map and sandstone of Merced Formation (unit 113), free swell 60 percent; SM13, sheared matrix, free swell 60 percent; SM9, sheared rock from 2-ft shear zone in shale and graywacke, free swell 53 percent; SSF1, Franciscan shear zone material, free swell 110 percent; SM8, fault gouge between Franciscan chert and graywacke, free swell 144 percent; unknown location, gouge in shear zone (1-2 ft thick) between silica-carbonate rock and Franciscan sheared flysch, free swell 72 percent; SNR8, gouge around graywacke blocks, free swell 59 percent. See also samples for unit 701.

Samples of surficial mantle on Franciscan melange: SNR5, sloughed soil, probably on landslide, free swell 81 percent; SNR6, clay soil on shale, free swell 110 percent; P4A, slumped soil, free swell 108 percent; P4B, soil, free swell 50 percent; I6A, soil, free swell 62 percent; P5B, mantle(?) material, free swell 90 percent; SG22A, clayey subsoil, free swell 95 percent; SG22B, clay silt soil, free swell 55 percent; SG22D, clayey subsoil, free swell 95 percent; SG23A, clayey subsoil on melange, free swell 74 percent; SG23B, clayey subsoil, free swell 77 percent; SM2, soil, free swell 89 percent. See also samples for unit 701.

Stratigraphic thickness: Hundreds to thousands of feet.

Sources: Blake and others, 1971, 1974; Cotton, 1972; Ellen and others, 1972; many stations.

MAP UNIT 802 Franciscan melange of metamorphic rocks

Geologic units, (age), and location: Melange of metamorphic rocks of the Franciscan assemblage (KJ), in northern half of region. Consists of parts of unit KJfm of source maps, as determined by interpretation of aerial photographs, and unit fmsr of source map in northern Mayacmas Mountains.

Summary: Like unit 801. Much to most is matrix of clayey gouge and severely sheared rock containing abundant hard blocks and small shattered masses of various rock types; minor to most is larger masses of metamorphic rock. Much bedrock is expansive (sheared rock); much surficial mantle is expansive (where clayey).

Composition: Much to most of unit is clayey gouge and severely sheared rock that contains variably abundant hard blocks and small shattered masses of various rock types (like unit 800); minor to most is larger masses of metamorphic rock (like unit 703), largely semischistose metagraywacke and metashale. Blocks (diameter less than 100 ft) and small shattered masses (as much as 0.1-0.2 mile in length) constitute as much as half of the rock mass, exclusive of the larger masses, which are as long as 1 mile and constitute little to most of the unit in different places.

Hardness: Gouge and severely sheared rock are firm to soft, soft where weathered; blocks are hard. Metamorphic rock is largely hard where fresh; where weathered, metagraywacke is largely firm, metagreenstone firm to hard, and metashale firm to soft.

Bedding: Absent in severely sheared rock, interrupted or obliterated in much variably sheared rock. Masses of metagraywacke are distinctly bedded, largely in thin to thick beds of metagraywacke between lesser metashale, but some very thick (10- to 30-ft or more) beds of metagraywacke. Metagreenstone is unbedded to indistinctly bedded (like unit 253); metachert distinctly bedded, commonly in thin beds.

Parting: Shears define very close, crudely parallel parting in severely sheared rock. Metagraywacke generally has slabby parting along foliation at very close to close, in places moderate, spacing.

Fracture: Very close shear surfaces in severely sheared matrix; blocks are generally 1-50 ft in diameter, and some are fractured at moderate to very wide spacing. Masses of metamorphic rock have mostly close to moderate, locally wide, fracture spacing, and much has shear surfaces at close to wide spacing.

Permeability: Intergranular permeability of bedrock is very low. Fracture permeability in shallow rock is very low in severely sheared rock; largely low, some moderate, in masses of metamorphic rock and other rock types (probably much to most of unit). Much mantle low to very low, much moderate.

Surficial mantle: Much clayey (largely on severely sheared rock), much granular.

Expansivity: Much bedrock is expansive (sheared rock), much unexpansive. Much surficial mantle is expansive (where clayey), much unexpansive. Bedrock samples: P2, weathered sheared metashale, free swell 72 percent; P3A, weathered sheared metashale, free swell 50 percent; SG17, unsheared bedrock, free swell 70 percent. Surficial mantle samples: P3B, soil on sheared metashale, free swell 74 percent; NV6A, clayey subsoil on metagraywacke, free swell 68 percent; NV6B, uncracked soil on metagraywacke, free swell 45 percent. See samples for unit 703.

Stratigraphic thickness: Hundreds to thousands of feet.

Sources: Blake and others, 1971, 1974; McLaughlin, 1978; many stations.

MAP UNIT 803 Variably sheared or brecciated Franciscan sandstone and shale

Geologic units, (age), and location: Variably sheared sandstone and shale of the Franciscan assemblage (KJ), in Marin highlands. Consists of intermediate topography in melange (unit KJfs of source map) and in sandstone and shale (unit KJfss of source map), as determined by interpretation of aerial photographs; and unit gwy of source map only north of Sausalito and Marin Headlands State Park.

Summary: Variably sheared or brecciated sandstone and shale, including some gouge and severely sheared shale that may contain hard blocks. Proportions vary greatly. Bedrock is largely unexpansive, but some is expansive (sheared rock). Much surficial mantle is unexpansive, much is significantly expansive, and some is severely expansive.

Composition: Variably sheared or brecciated sandstone (graywacke) and shale (including siltstone), including some gouge and severely sheared shale that may contain hard blocks (like unit 800) and much unsheared rock (like unit 700) that occurs in discontinuous masses. Proportions range from largely shattered sandstone containing much gouge and sheared shale to largely unsheared rock containing much shattered or brecciated sandstone. Includes minor to some greenstone, chert, and serpentinite (like units 253, 511, and 805, respectively) and minor conglomerate.

Hardness: Most fresh rock is hard to firm; weathered rock is mostly firm to soft; blocks are hard.

Bedding: Discontinuous, distinct sandstone beds, thin to very thick (10-30 ft or more) where recognizable; greenstone, chert, and serpentinite are bedded as in units 253, 511, and 805, respectively.

Parting: At contacts between sandstone and shale; in shale and sheared shale at very close spacing.

Fracture: Largely very close to moderate spacing, locally wide to very wide (6 ft). Shear surfaces are very close in severely sheared shale and close to wide in most other rock; most breccia fragments very small to medium, separated by very thin gouge seams; blocks generally 1-50 ft in diameter, but many have effective moderate to very wide fracture spacing.

Permeability: Intergranular permeability of almost all bedrock is very low; fracture permeability in shallow rock largely low, some to much(?) moderate, some very low (in gouge and severely sheared rock). Much mantle moderate, much low to very low.

Surficial mantle: Much to most granular, some to much clayey.

Expansivity: Bedrock is largely unexpansive, but some is expansive (sheared rock). Much surficial mantle is unexpansive, much significantly expansive, some severely expansive. See samples for units 701 and 801.

Stratigraphic thickness: Hundreds to thousands of feet.

Sources: Many stations.

MAP UNIT 804 Franciscan metagreenstone, variably sheared

Geologic unit, (age), and location: Metagreenstone of the Franciscan assemblage (KJ), variably sheared, in Marin highlands. Consists of parts of Franciscan metagreenstone that have intermediate topography, as determined by interpretation of aerial photographs.

Summary: Slightly metamorphosed greenstone. Most is variably sheared and shattered, some severely sheared, some unsheared. Some to much bedrock is expansive; much surficial mantle is significantly expansive, some severely expansive.

Composition: Most of unit is slightly metamorphosed, largely nonfoliate greenstone like unit 254, similar in composition to unit 253 except for metamorphism; most is variably sheared and shattered, much unsheared (like unit 254). Includes some severely sheared rock (like unit 800).

Hardness: Largely hard where fresh; largely firm to soft where weathered, but some is firm to hard.

Bedding: Largely unbedded to indistinctly bedded in thick to very thick (tens of feet) irregular beds; much is interrupted by shearing.

Parting: Large absent.

Fracture: Largely close to very close spacing; fabric of roughly parallel shear surfaces in places.

Permeability: Bedrock has very low intergranular permeability; most has low, some moderate, fracture permeability largely in shallow rock, but some has very low total permeability (severely sheared rock). Probably most mantle low to very low, much moderate.

Surficial mantle: Probably largely clayey, much granular.

Expansivity: Bedrock is largely unexpansive, some to much expansive (sheared rock). Much surficial mantle is unexpansive, much to most is significantly expansive, some severely expansive. See samples for unit 253.

Stratigraphic thickness: Hundreds to thousands of feet.

Sources: Blake and others, 1974; several stations.

MAP UNIT 805 Sheared serpentinite

Geologic units, (age), and location: Sheared serpentinite, throughout region. Consists of parts of serpentinite, as determined by interpretation of aerial photographs; sedimentary serpentine member of Knoxville Formation (J), in northern part of region; and metamorphosed ultramafic rocks, in northern Mayacmas Mountains.

Summary: Most is severely sheared serpentinite that contains abundant blocks of serpentinite, ultramafic rock, and other rock types; borders are clayey gouge. In places contains silica-carbonate rock. Some bedrock and some to much mantle are expansive.

Composition: Largely severely sheared serpentinite, but contains variably abundant blocks (as large as 100 ft in diameter) of serpentinite, ultramafic rock, and other rock types. Includes some highly plastic clayey gouge, typically along borders of unit. In many places, contains lenses and tabular bodies of silica-carbonate rock (like unit 910), especially near or along borders; locally contains unsheared masses of serpentinite or ultramafic rock (like unit 900) more than 100 ft in length.

Hardness: Sheared serpentinite is commonly soft, some is firm. Blocks are hard, silica-carbonate rock mostly hard and tough, unsheared serpentinite and ultramafic rock hard, gouge soft to firm.

Bedding: Absent.

Parting: Shears in sheared serpentinite generally define very closely spaced, crudely parallel parting.

Fracture: Very close shear surfaces in sheared serpentinite. Blocks are mostly less than 10 ft in diameter, but may reach 50-100 ft; some are fractured at close to wide spacing. Silica-carbonate rock has mostly moderate to very wide spacing (10 ft or more). Unsheared masses have moderate to wide spacing.

Permeability: Very low intergranular permeability, except minor moderate to high (in some weathered silica-carbonate rock). Fracture permeability in shallow rock is largely low, some moderate, some very low (in gouge borders). Most mantle moderate, much very low to low.

Surficial mantle: Largely granular and rocky, much clayey (probably over gouge borders).

Expansivity: Bedrock is largely unexpansive; gouge borders (some of unit) are expansive, much severely expansive. Surficial mantle is largely unexpansive, but some to much is expansive, much of which is severely expansive. Bedrock samples: SM5B, matrix of sheared serpentinite, free swell 74 percent; SFS15, unknown material in sheared serpentinite(?), free swell 150 percent; W018, altered serpentinite, free swell 60 percent. Surficial mantle samples: W014, well-cracked clay soil on serpentinite, free swell 128 percent; W017, gravelly clay soil on serpentinite, moderately cracked, free swell 91 percent; SM5A, gravelly clay soil on serpentinite, free swell 77 percent; SFS7, gravelly clay soil on serpentinite and silica-carbonate rock, well-cracked, free swell 85 percent; SNR7, soil on serpentinite, free swell 72 percent; SQ6, soil on serpentinite, free swell 70 percent. See samples of gouge and sheared rock for unit 801.

Stratigraphic thickness: Largely stratiform in sheets as thick as 200 ft; locally may extend to greater depth.

Sources: Bailey and others, 1964; Ellen and others, 1972; McLaughlin, 1978; many stations.

MAP UNIT 900 Largely unsheared ultramafic rock and serpentinite

Geologic unit, (age), and location: Parts of serpentinite throughout region, as determined by interpretation of aerial photographs.

Summary: Not seen in field. Largely unsheared ultramafic rock and serpentinite, including borders and zones of severely sheared serpentinite that may contain hard blocks. Unsheared rock and blocks are hard, sheared serpentinite is soft to firm. Bedrock and surficial mantle are largely unexpansive.

Composition: Largely unsheared ultramafic rock and serpentinite, containing borders and zones of severely sheared serpentinite that may contain hard blocks (like unit 805).

Hardness: Unsheared rock and blocks are hard; sheared serpentinite is soft to firm.

Bedding: Absent.

Parting: Shears in sheared serpentinite define very closely spaced, crudely parallel parting.

Fracture: Unsheared rock has largely moderate to wide spacing, locally very wide (10 ft). Sheared serpentinite has very close spaced shear surfaces; blocks are mostly 1-10 ft in diameter.

Permeability: Bedrock has very low intergranular permeability; fracture permeability in shallow rock is largely low, locally moderate. Probably most mantle moderate.

Surficial mantle: Probably largely granular.

Expansivity: Bedrock and surficial mantle are largely unexpansive. See samples for unit 805.

Stratigraphic thickness: To depth.

Source: Bailey and others, 1964.

MAP UNIT 901

Geologic unit, (age), and location: Ultramafic rock (J), in Mendocino highlands.

Summary: Probably most is hard, unsheared, altered ultramafic rock, but much may be variably sheared. The one large exposure observed includes a variety of materials ranging from hard ultramafic rock (50-70 percent) through shear-foliated ultramafic rock (15-25 percent) to serpentinized gouge containing tectonic blocks of blueschist and ultramafic rock (15 percent). Most mantle is expansive, some or more is severely expansive.

Composition: Ultramafic rock, largely pyroxenite, that is coarsely crystalline (grains as large as 25 mm or more in length) and altered (serpentinized). Contains major zones of shear-foliated ultramafic rock and some sheared rock that consists of gouge containing hard tectonic blocks. Coarsely crystalline rock includes antigorite after olivine (65 percent), bastite after enstatite (35 percent), and original augite. Alteration is nearly complete. Probably most of unit is hard and relatively unsheared, but much may be sheared as in units 800 and 805. See unit 900.

Hardness: Coarsely crystalline rock is hard to locally firm; foliated rock firm; gouge soft; tectonic blocks hard.

Bedding: Absent.

Parting: Probably absent in most. Very close spacing in some weathered shear-foliated rock and in severely sheared rock.

Fracture: Moderate to wide, some very wide, original spacing in unsheared massive crystalline rock and tectonic blocks; close to very close spacing of spheroidal weathering fracture in some(?) massive crystalline rock. Very close spacing in gouge zones; close to very close spacing in shear-foliated rock, but effective spacing probably is close to moderate.

Permeability: Very low intergranular permeability in bedrock; low fracture permeability in shallow rock. Most mantle low to very low.

Weathering: Unweathered rock extends to within a few feet of ground surface on steeper slopes and ridge crests, covered by thin soil; unit is more deeply weathered on gentle slopes. Spheroidal(?) weathering around hard corestones in some or more. Depth of weathering and nature of weathering effects are uncertain.

Surficial mantle: Largely clayey. Well-cracked black and greenish soils containing much clay; thin on steeper slopes, thicker and probably more expansive on gentler slopes.

Expansivity: Most bedrock unexpansive, some(?) expansive (sheared rock). Most mantle is expansive, some or more is severely expansive. Samples: GY3, stony clay soil, moderately to well cracked, typical at this station, free swell 75 percent; GY4, sticky clay soil, not typical, free swell 102 percent; GY10, black clay soil, deeply cracked, typical at this station, free swell 121 percent.

Sources: Blake and others, 1971; Gealey, 1951; three stations.

MAP UNIT 902

Geologic unit, (age), and location: Diabase and gabbro (J), only in Mendocino highlands and Mayacmas Mountains.

Summary: Massive diabase and gabbro. Fresh rock hard, weathers to grus that is soft to firm but contains hard to firm corestones. Most to almost all mantle significantly expansive.

Composition: Massive holocrystalline diabase and gabbro containing grains as much as 2 mm in length; some of unit is compositionally layered and has cumulate texture. Hydrothermal and late magmatic alteration are extensive. Most gabbro originally averaged 50 percent labradorite, 50 percent pyroxene; in some localities (not observed), olivine may constitute one-third of the rock, which may significantly alter the physical properties noted. Unit includes minor to some(?) sheared rock like unit 800.

Hardness: Fresh rock hard; moderately weathered rock firm; rock weathered to grus is soft to firm. Most rock near ground surface is weathered firm. Corestones are hard near center, hard to firm toward edges.

Bedding: Absent. Some is layered and has cumulate texture, but these layers do not provide parting.

Fracture: Close to moderate spacing, some wide. In weathered zone, some corestones that have tight internal fractures behave as large blocks.

Permeability: Intergranular permeability of fresh rock very low, of granular weathered rock (grus) moderate to low; probably gradational with degree of weathering. Fracture permeability low to possibly moderate in shallow hard rock. Most mantle low to very low.

Weathering: Weathered to depths probably much greater than 10 ft. Some to most areas have spheroidal weathering that produces matrix of grus containing residual corestones of firm and hard rock as large as 5 ft or more in diameter. Where fracture spacing is moderate, rock is totally weathered to grus to depth of 10 ft.

Surficial mantle: Largely clayey.

Expansivity: Almost all bedrock unexpansive, minor(?) expansive (sheared rock). Most to almost all mantle significantly expansive. Samples: GY1, mildly cracked sandy silt soil, typical, free swell 73 percent; GY11, moderately cracked sandy clay soil, typical, free swell 67 percent; GRN2, moderately cracked dark sandy clay soil, typical at this station, free swell 77 percent; GY5, typical silty clay soil, free swell 57 percent; GRN5, soil on sheared rock, free swell 74 percent.

Sources: Blake and others, 1971; Gealey, 1951; McLaughlin, 1978; seven stations.

MAP UNIT 903

Geologic unit, (age), and location: Diabase, only near Vallejo.

Summary: Not seen in field. Largely diabase, probably some sheared, like units 904 and 905.

Composition: Holocrystalline intrusive diabase that contains grains as much as 12 mm in length; consists of 60-70 percent hornblende, 10-20 percent augite, 8-15 percent plagioclase. Called hornblendite by Weaver (1949), who reported that rock is completely crystalline and usually rather fresh. Probably some rock is sheared, as in unit 905.

Hardness: Hard where fresh.

Bedding: Absent.

Parting: Possibly sheeted like unit 904.

Fracture: Weaver (1949) reported that boulders and cobbles are derived from this unit, so spacing is as great as moderate (more than 10 in.), probably as great as wide.

Permeability: Intergranular permeability of bedrock very low, except low to moderate in possible granular weathered rock (grus); fracture permeability low to moderate in shallow rock, possibly low to depth. Weaver (1949) reported numerous small springs emanating from this unit at contact with unit 683. Mantle ranges from moderate to very low, proportions unknown.

Weathering: May include soft granular weathering phase (grus) like unit 902.

Surficial mantle: Granular to clayey, proportions unknown.

Expansivity: Bedrock largely unexpansive, some may be expansive (sheared rock). Most mantle unexpansive to significantly expansive; where clayey, mantle is probably largely significantly expansive. See samples for units 904 and 905.

Stratigraphic thickness: To depth.

Source: Weaver, 1949.

MAP UNIT 904

Geologic unit, (age), and location: Diabase, only near Mount Diablo.

Summary: Largely diabase, probably mostly in very thick sheets between thin shear zones; some pillow basalt. Diabase is hard where fresh, largely firm where weathered, shattered at very close to moderate spacing. Some mantle severely expansive.

Expression in aerial photographs: Sharp crests; much has ribbing at about 100-ft spacing, but some lacks ribbing.

Composition: Largely diabase, some (as much as one-third) pillow basalt like unit 253 (K.M. Williams, oral commun., 1981). Diabase is unsheared, holocrystalline, contains grains 0.5-2 mm in length, and is uniform in composition except for replacement of augite by fibrous hornblende in considerable parts of the area (Turner, 1891); minor vesicular diabase. Rock is altered to chlorite-rich material along some joints. Very thin to thin shear zones between very thick sheets of diabase consist of clay- to sand-sized sheared diabase. "Spheroidal basalt" (probably pillow basalt) reported to be prominent on north and east slopes of Mount Zion (Taff, 1935). No problem with sulfide content according to employees at one quarry, but Pampeyan (1963) reported layers of iron sulfide 3-4 in. thick. Includes hydrothermally altered zones. Sheared rock (like unit 800) is probably minor.

Hardness: Diabase is hard where fresh, including where staining on fracture surfaces makes rock look weathered (to depths of 35-50 ft). Where weathered (to deeper than 15 ft), diabase is largely firm, some approaching soft, some hard; weathered rock mass is firm where fracture spacing is close to very close. Sheared zones between sheets of diabase are firm.

Bedding: Diabase occurs in sheets or layers that range from thick to 20 ft, mostly 5-15 ft, between very thin to thin shear zones. This feature was not mentioned by Pampeyan (1964), so it may not be true everywhere, but called typical by K.M. Williams (oral commun., 1981). Hydrothermally altered zones as thick as 10 ft; sulfide layers as thick as 3-4 in.

Parting: Good continuous parting in diabase at very wide spacing (5-15 ft) is not a weathering feature, present to depth.

Fracture: Variable, irregular (Pampeyan, 1964). Diabase has largely very close to moderate spacing, but minor blocks as wide as 3-4 ft. Rock loosened by blasting consists largely of small to 6-in. pieces, but 20-30 percent is larger than 6 in.; largest product at quarry is riprap, 4-12 in. wide. Much of diabase appears to have had an original moderate to wide fracture spacing before being shattered at very close to moderate spacing.

Permeability: Bedrock has very low intergranular permeability; low to probably moderate fracture permeability in shallow rock, possibly low to depth. Clayey partings between sheets of diabase may be continuous surfaces of very low total permeability. Much mantle low to very low, probably much moderate.

Weathering: Brown color (staining of fracture surfaces) extends to depths of 35-50 ft. Rock pieces are fresh internally at depths of more than

10-25 ft; most rock is weathered firm to depths greater than 15 ft. No soft granular phase (grus) or spheroidal weathering noted.

Surficial mantle: Much clayey, probably much granular. Mantle is largely clayey where observed in lower parts of terrain, but expression in aerial photographs (ribbing) suggests much granular mantle in higher parts.

Expansivity: Almost all bedrock unexpansive. Much mantle expansive, some or more of this severely expansive; probably much unexpansive. Samples: CL9A, very mildly cracked stony clay soil, typical, free swell 80 percent; CL9B, moderately cracked stony clay soil, covers about 10 percent of unit, free swell 90 percent; CL10, moderately cracked clay soil, typical at this station, free swell 102 percent; CL38A, red-brown silty clayey subsoil on flats, free swell 68 percent; CL38B, typical silty clayey surficial soil, free swell 47 percent. Surficial soil is largely uncracked to mildly cracked, some moderately cracked.

Stratigraphic thickness: To depth.

Sources: Pampeyan, 1963, 1964; Taff, 1935; Turner, 1891; K.M. Williams, oral commun., 1981; four stations.

MAP UNIT 905

Geologic unit, (age), and location: Diabase, only east of Santa Clara Valley near Coyote and near Lexington Reservoir in Santa Cruz Mountains.

Summary: Diabase, some to much of which is sheared, especially near margins. Soft granular weathered rock in much of unit. Most mantle significantly expansive. Not seen in field in Santa Cruz Mountains.

Expression in aerial photographs: Near Coyote, intermediate topography showing rounded crests and some ribbing; topographically resistant with respect to adjacent units 122 and 805; dark photographic tone compared to unit 805.

Composition: Diabase, varying in grain size from 0.5-10 mm, much having 1- to 2-mm grains. Some is banded by concentrations of minerals. Body enclosed within unit 805 (serpentinite) near Coyote is sheared and serpentinized near margins, where it resembles unit 805 except that many tectonic blocks are diabase.

Rock character varies mostly in degree of shearing. Exposures observed near Coyote give impression of about half sheared rock having close to very close fracture, half coherent diabase having close to moderate fracture, but these exposures are near margins of body, where shearing is probably concentrated. Thus, near Coyote probably some to much is sheared. In Santa Cruz Mountains, probably much to most is sheared.

Hardness: Matrix of sheared rock consists of firm to hard pieces that constitute a firm to soft rock mass; enclosed tectonic blocks are hard. Unsheared rock is hard where fresh, but near Coyote, and possibly in Santa Cruz Mountains, weathers to soft granular material (grus) as described for granitic rock (unit 907).

Bedding: Absent. Some rock is banded in thin to medium layers by segregation of mineral constituents.

Parting: Absent in unsheared parts of unit. In sheared parts of unit, present at very close to wide spacing; much is close to very close, much moderate to wide.

Fracture: Sheared rock has close to very close spacing of roughly parallel fractures; blocks mostly medium to large, some as large as 4 ft in diameter. Unsheared rock is mostly fractured at close to moderate spacing, some wide.

Permeability: Bedrock has very low intergranular permeability except low to moderate in granular weathered rock (grus); low to moderate fracture permeability in shallow rock, possibly low to depth. Most mantle low to very low, some to possibly much moderate.

Weathering: Diabase weathers dramatically from hard fresh rock to soft granular weathered rock (grus) at depth of about 10 ft. Blocks of diabase in sheared zones weather less regularly; some are firm at depth of 20 ft.

Surficial mantle: Probably largely clayey, some to much granular. Uniform red-brown soil and subsoil overlie exposures on San Felipe Road near Coyote; subsoil is stony clay, of which sample MGH3 is typical. In body near Coyote that is surrounded by serpentinite, mantle is thin as on serpentinite; much is uncracked, much mildly to moderately cracked clay. Exposures examined in this body are near its sheared margin.

Expansivity: Almost all bedrock is unexpansive, some may be expansive (sheared rock). Most mantle expansive, largely significantly expansive, but probably some severely expansive; some to possibly much unexpansive. Sample MGH3, mildly to moderately cracked clay subsoil, typical, free swell 77 percent.

Stratigraphic thickness: To depth.

Sources: Four stations.

MAP UNIT 906

Geologic unit, (age), and location: Granitic rocks (K), only on Point Reyes peninsula and Bodega Head.

Summary: Largely granitic rock, minor aplite and pegmatite dikes, schist, marble, and quartzite. Hard where fresh, firm to soft and friable where weathered; in some areas weathering extends to depth of 70 ft, largely to 30 ft. Most weathered rock has moderate intergranular permeability. Almost all bedrock and most mantle are unexpansive.

Composition: Largely diorite, ranging in composition from biotite-hornblende diorite containing little or no quartz to quartz-biotite-hornblende diorite containing 10-30 percent mafic minerals. In many places, the rock has a more or less pronounced gneissoid appearance and variably strong foliation owing to parallel alignment of biotite. This rock is intruded in many places by dikes of aplite and of pegmatite as wide as 7 ft, mostly less than 1 ft in width. It contains variably abundant basic inclusions (rock containing little quartz and feldspar); minor unmapped bodies of schist, marble, and quartzite, like unit 903; and rare fault gouge. The granitic rock is generally weathered to granular disintegrated granite (grus) that ranges from clay free to nearly clay saturated.

Hardness: Hard where fresh, firm to soft and friable where weathered.

Bedding: Absent, but rock displays gneissoid appearance or weak foliation owing to alignment of biotite grains.

Parting: Largely absent. Present to various degrees of development in foliated, biotite-rich rock.

Fracture: Mostly close to moderate spacing, in places wide to rarely very wide (6 ft). Rock between fractures is generally shattered to varying degrees, and where weathered most of rock disintegrates on close to very close spacing to form grus, which is effectively a homogeneous, soft, friable coarse sand. Many fractures are lined with crushed granitic rock of fine sand and silt size, many are iron stained, and many faults are lined with plastic clay gouge that is mostly thinner than 1 in. but as thick as a few feet. In places, regular fracture patterns extend beyond outcrop scale.

Permeability: Fresh rock has very low intergranular permeability; fracture permeability in shallow fresh rock is mostly low, some high in breccia zones, but many fractures are lined with gouge of very low permeability. Disintegrated weathered rock (grus) ranges from clay free to nearly clay saturated, and intergranular permeability consequently ranges from low to high, mostly moderate. Most mantle moderate, some high, some to much(?) low.

Weathering: Most rock disintegrates dramatically where weathered, forming soft to firm disintegrated granite (grus). Weathering depth is irregular. In most exposures, rock is largely firm to soft and friable, but containing some hard pieces, to depth of about 30 ft. In some exposures, much is firm to soft at depth of about 70 ft. Color change occurs at depths as great as 40 ft, and softness extends deeper than color change. On Point Reyes peninsula, much of unit underlies old erosional surfaces where weathering is probably particularly deep and thorough.

Surficial mantle: Largely granular, probably some to much(?) clayey subsoil. Most is clayey and silty coarse granitic sand. In many places, bedrock is covered by very thick colluvial granitic sand that is indistinctly bedded.

Expansivity: Almost all bedrock is unexpansive, rarely expansive (fault gouge and altered rock). Most mantle unexpansive, some to much(?) significantly expansive (subsoil). Samples: T011, altered granitic rock, free swell 94 percent; DB38, soil lacking B-horizon, free swell 49 percent (exaggerated?). See samples for unit 907.

Stratigraphic thickness: To depth.

Sources: Anderson, 1899; J. A. Bartow, written commun., 1972; Blake and others, 1974; Galloway, 1977; Johnson, 1934; Koenig, 1963; Osmont, 1905; Schlocker and Bonilla, 1963; Schlocker and others, 1963; 10 stations.

MAP UNIT 907

Geologic unit, (age), and location: Granitic rocks (K), only near Montara Mountain in northern Santa Cruz Mountains.

Summary: Almost all is granitic rock, largely quartz diorite; some aplite and pegmatite. Fresh rock is hard; disintegrated weathered rock is soft and extends to depths of 10-100 ft. Some mantle is significantly expansive.

Composition: Almost all is granitic rock, largely quartz diorite. Includes some aplite and pegmatite; minor marble, hornfels, and schist, like unit 908; and rare clay fault gouge. In many places, granitic rock is weathered to granular disintegrated rock (grus) to depths of 10-100 ft.

Hardness: Hard where fresh; disintegrated rock soft except for hard spheroidal weathering cores of medium to large size.

Bedding: Absent; weakly foliated by preferred orientation of mica. Aplite and pegmatite bodies are tabular and medium to thick.

Parting: Absent.

Fracture: Spacing ranges from close to wide or very wide, commonly close to moderate.

Permeability: Intergranular permeability very low in fresh bedrock; ranges from low to high, largely moderate, in disintegrated weathered bedrock (grus). Low to moderate fracture permeability in shallow fresh rock. Most mantle moderate, some high, some low.

Weathering: Most rock disintegrates dramatically where weathered, forming soft to firm disintegrated granite (grus). Weathering depth variable, 10-100 ft.

Surficial mantle: Largely granular, some clayey subsoil. Most is clayey and silty coarse granitic sand.

Expansivity: Almost all bedrock is unexpansive; rare fault gouge may be significantly expansive. Most mantle unexpansive, some significantly expansive (subsoil). Samples: MM13, loam soil, free swell 62 percent (exaggerated?); MM14, uncracked loam soil, free swell 60 percent (exaggerated?); MM17A, slightly cracked surficial soil, free swell 70 percent (exaggerated?); MM17B, moderately cracked subsoil, free swell 88 percent (exaggerated?).

Stratigraphic thickness: To depth.

Source: Ellen and others, 1972.

MAP UNIT 908

Geologic unit, (age), and location: Metamorphic rocks (pre-Cretaceous), only on Point Reyes peninsula.

Summary: Briefly seen in field. Marble, quartzite, and schist that occur as isolated patches within granitic rock (unit 906). Bedrock and mantle are largely unexpansive.

Composition: Marble, quartzite, and schist, occurring in isolated patches within granitic rock of unit 906 as pendants and (or) inclusions. Only the largest body of these materials is shown on map. Marble is pure white, coarsely crystalline, and contains disseminated patches of graphite and local scheelite. Quartzite is thoroughly recrystallized and some is schistose. Schists are of two types: (1) mafic schists rich in biotite and (2) siliceous schists, which are fine-grained quartzite interlayered with wollastonite or with quartz-mica schist.

Hardness: Marble is hard (harder than adjacent granitic rock); quartzite hard; mafic schist firm to hard where fresh (softer than adjacent granitic rock), soft where weathered; siliceous schist is dominantly hard quartzite that has firm to soft interlayers.

Bedding: Absent in quartzite; indistinct in places in marble; unknown in schist, but one body of siliceous schist appears to be a bed about 30 ft thick composed of very thin to medium beds of quartzite and wollastonite. Unit generally occurs as patches rather than beds.

Parting: Absent except in schists, where parting is present at close to very close spacing. Parting in mafic schist is along foliation, in siliceous schist along bedding.

Fracture: Marble is fractured largely at moderate to wide spacing (wider than granitic rock); quartzite and mafic schist at close to moderate spacing (similar to granitic rock); siliceous schist unknown.

Permeability: Intergranular permeability of bedrock very low. Fracture permeability in shallow bedrock low to moderate, the moderate likely in quartzite and possibly in marble. Most mantle moderate.

Weathering: Quartzite is weathered to depth of only a few feet; marble mostly fresh and hard; mafic schists deeply weathered and softened; siliceous schists shallowly weathered.

Surficial mantle: Largely granular.

Expansivity: Bedrock and mantle are largely unexpansive.

Stratigraphic thickness: Occurs in band as wide as 1,000 ft.

Sources: Anderson, 1899; J.A. Bartow, written commun., 1972; Galloway, 1977; Weaver, 1949; two stations.

MAP UNIT 909

Geologic unit, (age), and location: Limestone of the Franciscan assemblage (KJ), in Santa Cruz Mountains. Includes Calera Limestone of Lawson (1902).

Summary: Hard crystalline limestone, commonly containing nodules or interbeds of chert. Some surficial mantle is expansive.

Composition: Crystalline limestone, commonly containing nodules or interbeds of chert that in places may constitute 30 percent of unit.

Hardness: Hard.

Bedding: Limestone is unbedded to distinctly bedded in medium to thick beds between thin to medium beds of chert.

Parting: Largely absent; present in some of unit along bedding planes at close to wide spacing.

Fracture: Spacing variable, close to very wide.

Permeability: Bedrock has very low intergranular permeability, low to locally moderate or high fracture permeability in shallow rock and in some deeper rock. Mantle moderate to very low.

Surficial mantle: Granular to clayey, proportions unknown.

Expansivity: Bedrock is unexpansive. Surficial mantle is largely unexpansive, some expansive. Sample MM11, stony soil, free swell 83 percent.

Stratigraphic thickness: Lenticular bodies as thick as 400 ft.

Sources: Bailey and others, 1964; Ellen and others, 1972; one station.

MAP UNIT 910

Geologic unit, (age), and location: Silica-carbonate rock, throughout region.

Summary: Fine-grained carbonate and silica in varying proportions. Generally hard and tough, fracture spacing as wide as 10 ft or more. Some expansive bedrock and surficial mantle.

Composition: Fine-grained magnesite (or other carbonate) and silica (quartz, chalcedony, opal) in varying proportions as hydrothermal replacement of sheared serpentinite (of unit 805); forms lenses and tabular bodies as wide as a few hundred feet, generally along borders of serpentinite bodies; host rock for mercury ore. Very probably includes some zones of sheared serpentinite (like unit 805) and clayey gouge (like unit 800).

Hardness: Mostly hard and tough.
Bedding: Absent.
Parting: Relict shear surfaces may be retained from serpentinite, but do not form parting surfaces.
Fracture: Close to very wide spacing (10 ft or more).
Permeability: Intergranular permeability of bedrock very low, except moderate to high in much weathered rock where solution of carbonate leaves pores in siliceous rock. Low fracture permeability in most shallow bedrock. Mantle very low to high.
Surficial mantle: Rocky, granular to clayey; much absent (where rock crops out).
Expansivity: Bedrock and surficial mantle are largely unexpansive, some of each expansive (where clayey sheared rock). Samples: SG16, alteration product in bedrock, free swell 48 percent; SFS7, well-cracked gravelly clay soil on silica-carbonate rock and serpentinite, free swell 85 percent. See samples for unit 805.
Stratigraphic thickness: Tens to hundreds of feet.
Sources: Bailey and others, 1964; one station.

MAP UNIT 911

Geologic units, (age), and location: High-grade metamorphic rocks of the Franciscan assemblage (KJ), in northern Mayacmas Mountains. Consists of much of metasandstone (unit fsm) and high-grade rocks (unit fm) of McLaughlin (1978).
Summary: Not seen in field where mapped. Largely hard masses of metamorphic rock; some to possibly much clayey sheared rock. Some to possibly much bedrock and probably much mantle is expansive.
Composition: Most is foliated high-grade metamorphic rock, including glaucophane schist, amphibolite, eclogite, and glaucophane-muscovite-quartz schist. Includes some to possibly much severely sheared rock like unit 800.
Hardness: Hard where fresh, hard to firm where weathered. Sheared rock is firm to soft.
Bedding: Absent.
Parting: Present along foliation in much weathered rock, variable spacing.
Fracture: Moderate to very wide spacing in metamorphic rock; very close to moderate in sheared rock.
Permeability: Intergranular permeability of bedrock very low. Most shallow bedrock has low fracture permeability. Mantle, where present, largely low to very low.
Weathering: Hard rock crops out in much of unit, but some weathers to depth of 10 ft or more and produces soil.
Surficial mantle: Absent to granular in much, clayey in much.
Expansivity: Bedrock is largely unexpansive, some to much(?) expansive (clayey sheared rock). Much surficial mantle is unexpansive, much probably expansive (where clayey). Sample J3, subsoil on metasandstone, free swell 51 percent (exaggerated). See samples of gouge and sheared rock for unit 801.
Stratigraphic thickness: Variable.
Sources: Ellen and others, 1972; McLaughlin, 1978; several stations within units 800 and 801.

MAP UNIT Sheared and shattered rock along faults and in landslides

Geologic units, (age), and location: Mapped faults and large landslide deposits, throughout region. Large landslides are shown in some parts of region, but are incompletely shown or not shown at all in other parts; see map showing portrayal of landslide deposits (pl. 1).
Summary: Bedrock modified by movement of faults or landslides; commonly includes gouge and sheared rock. Much has increased fracture permeability, but gouge, severely sheared rock, and landslide slip surfaces are generally impermeable. Bedrock and mantle tend to be more clayey and expansive in fault zones.
Composition: Bedrock landslides and zones along faults consist of materials of adjacent or underlying units that have been modified by fault or landslide movement. Commonly includes sheared rock and (or) gouge along surfaces of movement, especially in clayey rock; in landslides, major slip surface is commonly at base of deposit.
Hardness: Similar to adjacent or underlying units, except gouge and most sheared rock are firm to soft, and weathered rock may extend deeper than elsewhere.
Bedding: Roughly planar shear fabric present in places.
Parting: Fault surfaces, shear planes, and slip surfaces in landslides are surfaces of weakness, spacing variable.
Fracture: Generally more closely spaced than elsewhere; more open and open to greater depth than elsewhere.
Permeability: Along faults, low to moderate fracture permeability in hard rock at all depths, but severely sheared rock and gouge have very low total permeability. In landslides, opening of fractures gives low to moderate, locally high, fracture permeability to depths of many tens of feet; slip surfaces probably have very low total permeability.
Surficial mantle: Like that of adjacent or underlying units, except largely clayey over severely sheared rock along faults.
Expansivity: Like that of adjacent or underlying units, except gouge and severely sheared rock, as well as surficial mantle on these materials, are probably expansive.
Stratigraphic thickness: Bedrock landslides may extend from a few tens of feet to more than 100 feet deep. Zones of sheared and shattered rock along faults are commonly as thick as tens or hundreds of feet, in places as much as 1,000 ft or more, as measured normal to the fault; where faults are vertical, these materials extend to depth.

REFERENCES CITED IN "DETAILED UNIT DESCRIPTIONS" AND ON PLATES

Allen, J.E., 1946, Geology of the San Juan Bautista quadrangle, California: California Division of Mines Bulletin 133, p. 9-75, scale 1:62,500.

Anderson, C.A., 1936, Volcanic history of the Clear Lake area, California: Geological Society of America Bulletin, v. 47, no. 5, p. 629-664.

Anderson, C.A., and Russell, R.D., 1939, Tertiary formations of northern Sacramento Valley, California: California Journal of Mines and Geology, v. 35, no. 3, p. 219-253.

Anderson, F.M., 1899, The geology of Point Reyes peninsula: University of California, Department of Geology Bulletin, v. 2, no. 5, p. 119-153.

———1933, Knoxville-Shasta succession in California: Geological Society of America Bulletin, v. 44, no. 6, p. 1237-1270.

Anderson, Robert, and Pack, R.W., 1915, Geology and oil resources of the west border of the San Joaquin Valley north of Coalinga, California: U.S. Geological Survey Bulletin 603, 220 p.

Arnold, Ralph, 1908, The Miner Ranch oil field, Contra Costa County, California: U.S. Geological Survey Bulletin 340, p. 339-342.

Bailey, E.H., and Everhart, D.L., 1964, Geology and quicksilver deposits of the New Almaden District, Santa Clara County, California: U.S. Geological Survey Professional Paper 360, 206 p., scale 1:24,000.

Bailey, E.H., Irwin, W.P., and Jones, D.L., 1964, Franciscan and related rocks, and their significance in the geology of western California: California Division of Mines and Geology Bulletin 183, 177 p.

Bailey, T.L., 1930, The geology of the Potrero Hills and Vacaville region, Solano County, California: University of California, Department of Geological Sciences Bulletin, v. 19, no. 15, p. 321-333.

Bartow, J.A., 1985, Map and cross sections showing Tertiary stratigraphy and structure of the northern San Joaquin Valley, California: U.S. Geological Survey Miscellaneous Field Studies Map MF-1761, scale 1:250,000.

Blake, M.C., Jr., Bartow, J.A., Frizzell, V.A., Jr., Schlocker, Julius, Sorg, D.H., Wentworth, C.M., and Wright, R.H., 1974, Preliminary geologic map of Marin and San Francisco Counties and parts of Alameda, Contra Costa and Sonoma Counties, California: U.S. Geological Survey Miscellaneous Field Studies Map MF-574, scale 1:62,500.

Blake, M.C., Jr., Irwin, W.P., and Coleman, R.G., 1967, Upside-down metamorphic zonation, blueschist facies, along a regional thrust in California and Oregon, *in* Geological Survey research 1967: U.S. Geological Survey Professional Paper 575-C, p. C1-C9.

Blake, M.C., Jr., Smith, J.T., Wentworth, C.M., and Wright, R.H., compilers, 1971, Preliminary geologic map of western Sonoma County and northernmost Marin County, California: U.S. Geological Survey Open-File Map, scale 1:62,500.

Boyd, H.A., 1956, Geology of the Capay quadrangle, California: Berkeley, University of California, Ph.D. thesis, 201 p.

Brabb, E.E., compiler, 1970, Preliminary geologic map of the central Santa Cruz Mountains, California: U.S. Geological Survey Open-File Report, scale 1:62,500.

Brabb, E.E., and Pampeyan, E.H., compilers, 1972a, Preliminary geologic map of San Mateo County, California: U.S. Geological Survey Miscellaneous Field Studies Map MF-328, scale 1:62,500.

Brabb, E.E., and Pampeyan, E.H., 1972b, Preliminary map of landslide deposits in San Mateo County, California: U.S. Geological Survey Miscellaneous Field Studies Map MF-344, scale 1:62,500.

Brabb, E.E., Sonneman, H.S., and Switzer, J.R., Jr., compilers, 1971, Preliminary geologic map of the Mount Diablo-Byron area, Contra Costa, Alameda, and San Joaquin Counties, California: U.S. Geological Survey Open-File Map, scale 1:62,500.

Branner, J.C., Newsom, J.F., and Arnold, Ralph, 1909, Santa Cruz quadrangle, California, folio 163 of Geologic atlas of the United States: Washington, D.C., U.S. Geological Survey, 12 p., scale 1:62,500.

Brice, J.C., 1953, Geology of Lower Lake quadrangle, California: California Division of Mines Bulletin 166, 72 p.

Briggs, L.I., Jr., 1953a, Geology of the Ortigalita Peak quadrangle, California: California Division of Mines Bulletin 167, 61 p.

———1953b, Upper Cretaceous sandstones of Diablo Range, California: University of California Publications in Geological Sciences, v. 29, no. 8, p. 417-451.

California Department of Water Resources, 1966a, Geology, app. A *of* Evaluation of ground water resources, Livermore and Sunol Valleys: California Department of Water Resources Bulletin 118-2, 79 p.

———1966b, Final geologic report on the construction of the South Bay aqueduct terminal facilities: California Department of Water Resources, Project Geology Report C-12.

———1967, Geology, app. A *of* Evaluation of ground water resources, South Bay: California Department of Water Resources Bulletin 118-1, 153 p.

California State Water Resources Board, 1955, Santa Clara Valley investigation: California State Water Resources Board Bulletin 7, 154 p.

———1963, Alameda County investigation: California State Water Resources Board Bulletin 13, 196 p.

Cardwell, G.T., 1958, Geology and ground water in the Santa Rosa and Petaluma Valley areas, Sonoma County, California: U.S. Geological Survey Water-Supply Paper 1427, 273 p.

———1965, Geology and ground water in Russian River valley areas, and in Round, Laytonville, and Little Lake Valleys, Sonoma and Mendocino Counties, California: U.S. Geological Survey Water-Supply Paper 1548, 154 p.

Case, J.E., 1963, Geology of a portion of the Berkeley and San Leandro Hills, California: Berkeley, University of California, Ph.D. thesis, 216 p.

———1968, Upper Cretaceous and Lower Tertiary rocks, Berkeley and San Leandro Hills, California: U.S. Geological Survey Bulletin 1251-J, p. J1-J29.

Chuber, Stewart, 1961, Late Mesozoic stratigraphy of the Elk Creek-Fruto area, Glenn County, California: Stanford, Calif., Stanford University, Ph.D. thesis, 100 p.

Clark, A.W., 1948, Geology of a portion of the St. Helena quadrangle, California: Berkeley, University of California, M.A. thesis, 91 p.

Clark, B.L., 1912, The Neocene section at Kirker Pass on the north side of Mount Diablo: University of California, Department of Geology Bulletin, v. 7, no. 4, p. 47-60.

———1918, The San Lorenzo series of middle California: University of California, Department of Geology Bulletin, v. 11, no. 2, p. 45-234.

———1921, The stratigraphic and faunal relationships of the Meganos group, middle Eocene of California: Journal of Geology, v. 29, no. 2, p. 125-165.

———1938, Fauna from the Markley formation (upper Eocene) on Pleasant Creek, California: Geological Society of America Bulletin, v. 49, no. 5, p. 683-729.

Clark, B.L., and Campbell, A.S., 1942, Eocene radiolarian faunas from the Mount Diablo area, California: Geological Society of America Special Paper 39, 112 p.

Clark, B.L., and Woodford, A.O., 1927, The geology and paleontology of the type section of the Meganos formation (lower middle Eocene) of California: University of California, Department of Geological Sciences Bulletin, v. 17, no. 2, p. 63-142.

Clark, C.W., 1917, The geology and ore deposits of the Leona rhyolite: University of California, Department of Geology Bulletin, v. 10, no. 20, p. 361-382.

Clark, W.B., 1964, History of the mineral industry in the Mount Diablo region, *in* Guidebook to the Mount Diablo field trip, 1964: Davis, Calif., Geological Society of Sacramento, p. 79-80.

Colburn, I.P., 1961, The tectonic history of Mount Diablo, California: Stanford, Calif., Stanford University, Ph.D. thesis, 234 p.

———1962, Field trip no. 5—North flank of Mount Diablo, *in* Geologic guide to the gas and oil fields of northern California: California Division of Mines and Geology Bulletin 181, p. 407-412.

———1964, The Mesozoic stratigraphy in the vicinity of Mount Diablo, California, *in* Guidebook to the Mount Diablo field trip, 1964: Davis, Calif., Geological Society of Sacramento, p. 9-22.

Cooper-Clark and Associates, 1973, Detailed soil, geologic, and solid waste feasibility study, proposed sanitary landfill site, Potrero Hills, Solano County, California.

Condit, Carlton, 1938, The San Pablo flora of west central California: Carnegie Institution of Washington Publications, Contributions to Paleontology, v. 476, p. 217-268.

Cotton, W.R., 1972, Preliminary geologic map of the Franciscan rocks in the central part of the Diablo Range, Santa Clara and Alameda Counties, California: U.S. Geological Survey Miscellaneous Field Studies Map MF-343, scale 1:62,500.

Crittenden, M.D., Jr., 1951, Geology of the San Jose-Mount Hamilton area, California: California Division of Mines Bulletin 157, 74 p.

Cummings, J.C., 1968, The Santa Clara Formation and possible post-Pliocene slip on the San Andreas fault in central California, *in* Conference on geologic problems of San Andreas fault system, Stanford, Calif., 1967, Proc.: Stanford, Calif., Stanford University Publications in the Geological Sciences, v. 11, p. 191-206.

———1972, The Santa Clara Formation on the southern San Francisco peninsula: Guidebook for Friends of the Pleistocene field trip, Oct. 6-8, 1972, p. 3-9.

Davis, F.F., 1948, Mines and mineral resources of Napa County, California: California Journal of Mines and Geology, v. 44, no. 2, p. 159-188.

Davis, F.F., and Goldman, H.B., 1958, Mines and mineral resources of Contra Costa County, California: California Journal of Mines and Geology, v. 54, no. 4, p. 501-583.

Davis, F.F., and Jennings, C.W., 1954, Mines and mineral resources of Santa Clara County, California: California Journal of Mines and Geology, v. 50, no. 2, p. 321-430.

Davis, F.F., and Vernon, J.W., 1951, Mines and mineral resources of Contra Costa County [Calif.]: California Journal of Mines and Geology, v. 47, no. 4, p. 561-617.

Dibblee, T.W., Jr., 1966, Geologic map and sections of the Palo Alto 15-minute quadrangle, Santa Clara and San Mateo Counties, California: California Division of Mines and Geology Map Sheet 8, scale 1:62,500.

———1972a, Preliminary geologic maps of three quadrangles in Alameda and Santa Clara Counties, California: U.S. Geological Survey Open-File Report, scale 1:24,000.

———1972b, Preliminary geologic map of the Calaveras Reservoir quadrangle, Alameda and Santa Clara Counties, California: U.S. Geological Survey Open-File Report, scale 1:24,000.

———1973, Preliminary geologic maps of the Gilroy Hot Springs, Gilroy, Mt. Sizer, Mt. Madonna and Morgan Hill quadrangles, Santa Clara and Santa Cruz Counties, California: U.S. Geological Survey Open-File Report, scale 1:24,000.

———1975, Geologic maps of the Pacheco Pass, Hollister, Quien Sabe, Ortigalita Peak, San Benito, Panoche Valley, and "Tumey Hills" quadrangles, California: U.S. Geological Survey Open-File Report 75-394, scale 1:62,500.

Dibblee, T.W., Jr., and Brabb, E.E., 1978, Preliminary geologic maps of the Chittenden, Los Gatos, and Watsonville East quadrangles, California: U.S. Geological Survey Open-File Report 78-453, scale 1:24,000.

Dickerson, R.E., 1911, The stratigraphic and faunal relations of the Martinez formation to the Chico and Tejon north of Mount Diablo: University of California, Department of Geology Bulletin, v. 6, no. 8, p. 171-177.

———1916, Stratigraphy and fauna of the Tejon Eocene of California: University of California, Department of Geology Bulletin, v. 9, no. 17, p. 363-524.

———1922, Tertiary and Quaternary history of the Petaluma, Point Reyes, and Santa Rosa quadrangles: California Academy of Sciences Proceedings, ser. 4, v. 11, no. 19, p. 527-601.

Durrell, Cordell, 1959, The Lovejoy formation of northern California: University of California Publications in Geological Sciences, v. 34, no. 4, p. 193-219.

Ellen, S.D., Wentworth, C.M., Brabb, E.E., and Pampeyan, E.H., compilers, 1972, Description of geologic map units, San Mateo County, California, *in* Brabb, E.E., and Pampeyan, E.H., compilers, 1972, Preliminary geologic map of San Mateo County, California: U.S. Geological Survey Miscellaneous Field Studies Map MF-328, 10 p., scale 1:62,500.

Fox, K.F., Jr., 1983, Tectonic setting of late Miocene, Pliocene, and Pleistocene rocks in part of the Coast Ranges north of San Francisco, California: U.S. Geological Survey Professional Paper 1239, 33 p.

Fox, K.F., Jr., Sims, J.D., Bartow, J.A., and Helley, E.J., compilers, 1973, Preliminary geologic map of eastern Sonoma County and western Napa County, California: U.S. Geological Survey Miscellaneous Field Studies Map MF-483, scale 1:62,500.

Fulmer, C.V., 1964, The type Markley and Nortonville Formations, *in* Guidebook to the Mount Diablo field trip, 1964: Davis, Calif., Geological Society of Sacramento, p. 54-59.

Galloway, A.J., 1977, Geology of the Point Reyes Peninsula, Marin County, California: California Division of Mines and Geology Bulletin 202, 72 p.

Gealey, W.K., 1951, Geology of the Healdsburg quadrangle, California: California Division of Mines Bulletin 161, p. 7-50.

Geological Society of Sacramento, 1959, Coast Ranges—Livermore Valley to Hollister area [Calif.]: Annual field trip, May 2-3, 1959, 19 p.

Gilbert, C.M., 1943, Tertiary sediments northeast of Morgan Hill, California: American Association of Petroleum Geologists Bulletin, v. 27, no. 5, p. 640-646.

Gluskoter, H.J., 1962, Geology of a portion of western Marin County, California: Berkeley, University of California, Ph.D. thesis, 184 p.

Goudkoff, P.P., 1942, Foraminifera zones in the Upper Cretaceous of the Sacramento and San Joaquin Valleys, California [abs.]: American Association of Petroleum Geologists Bulletin, v. 26, no. 5, p. 899.

———1945, Stratigraphic relations of Upper Cretaceous in Great Valley, California: American Association of Petroleum Geologists Bulletin, v. 29, no. 7, p. 956-1007.

Hall, C.A., Jr., 1958, Geology and paleontology of the Pleasanton area, Alameda and Contra Costa Counties, California: University of California Publications in Geological Sciences, v. 34, no. 1, p. 1-89.

Ham, C.K., 1952, Geology of Las Trampas Ridge, Berkeley Hills, California: California Division of Mines Special Report 22, 26 p.

Hansen, W.R., 1964, Groundwater geology of the Livermore Valley groundwater basin, *in* Guidebook to the Mount Diablo Field Trip, 1964: Davis, Calif., Geological Society of Sacramento, p. 94-96.

Helley, E.J., Lajoie, K.R., Spangle, W.E., and Blaire, M.L., 1979, Flatland deposits of the San Francisco Bay region, California; their geology and engineering properties, and their importance to comprehensive planning: U.S. Geological Survey Professional Paper 943, 88 p.

Higgins, C.G., 1960, Ohlson Ranch Formation, Pliocene, northwestern Sonoma County, California: University of California Publications in Geological Sciences, v. 36, no. 3, p. 199-231.

Huey, A.S., 1948, Geology of the Tesla quadrangle, California: California Division of Mines Bulletin 140, 75 p.

Huffman, M.E., 1971, Geology for planning in the Sonoma Mountain and Mark West-Riebli Road areas, Sonoma County, California: California Division of Mines and Geology report to Sonoma County Planning Department, 20 p., scale 1:24,000.

Johnson, F.A., 1934, Geology of the Merced, Pliocene, formation north of San Francisco Bay, California: Berkeley, University of California, Ph.D. thesis, 148 p.

Johnson, W.S., 1964, Paleocene and Eocene geology on the north flank of Mt. Diablo, *in* Guidebook to the Mount Diablo field trip, 1964: Davis, Calif., Geological Society of Sacramento, p. 23-32.

Johnston, Stedwell, 1948, The geology of a portion of the Calistoga quadrangle, California: Berkeley, University of California, M.A. thesis, 47 p., scale 1:62,500.

Jones, W.F., 1911, Geology of the Sargent oil field: University of California, Department of Geology Bulletin, v. 6, p. 55-78.

Kachadoorian, Reuben, 1956, Engineering geology of the Warford Mesa subdivision, Orinda, California: U.S. Geological Survey Open-File Report, 14 p.

Kirby, J.M., 1942, Upper Cretaceous stratigraphy of the west side of Sacramento Valley south of Willows, Glenn County, California [abs.]: American Association of Petroleum Geologists Bulletin, v. 26, no. 5, p. 899.

———1943, Upper Cretaceous stratigraphy of the west side of Sacramento Valley south of Willows, Glenn County, California: American Association of Petroleum Geologists Bulletin, v. 27, no. 3, p. 279-305.

Koenig, J.B., 1963, The geologic setting of Bodega Head: California Division of Mines and Geology Mineral Information Service, v. 16, no. 7, p. 1-10.

Krauskopf, K.B., Feitler, S., and Griggs, A.B., 1939, Structural features of a landslide near Gilroy, California: Journal of Geology, v. 47, no. 6, p. 630-648.

Kunkel, Fred, and Upson, J.E., 1960, Geology and ground water in Napa and Sonoma Valleys, Napa and Sonoma Counties, California: U.S. Geological Survey Water-Supply Paper 1495, 252 p.

Lawson, A.C., 1914, San Francisco district (Tamalpais, San Francisco, Concord, San Mateo, and Haywards quadrangles), California, folio 193 *of* Geologic atlas of the United States: Washington, D.C., U.S. Geological Survey, 24 p., scale 1:62,500.

Lawson, A.C., and Palache, Charles, 1902, The Berkeley Hills, a detail of Coast Range geology: University of California, Department of Geology Bulletin, v. 2, no. 12, p. 349-450.

Lawton, J.E., 1956, Geology of the north half of the Morgan Valley quadrangle and the south half of the Wilbur Springs quadrangle, California: Stanford, Calif., Stanford University, Ph.D. thesis, 223 p.

Leith, C.J., 1949, Geology of the Quien Sabe quadrangle, California: California Division of Mines Bulletin 147, 60 p., scale 1:62,500.

Lutz, G.C., 1951, The Sobrante sandstone: University of California, Department of Geological Sciences Bulletin, v. 28, no. 13, p. 367-406.

Martin, Bruce, 1916, The Pliocene of middle and northern California: University of California, Department of Geology Bulletin, v. 9, no. 15, p. 215-259.

McLaughlin, R.J., 1978, Preliminary geologic map and structural sections of the central Mayacmas Mountains and the Geysers steam field, Sonoma, Lake, and Mendocino Counties, California: U.S. Geological Survey Open-File Report 78-389, scale 1:24,000.

McLaughlin, R.J., Simoni, T.R., Osbun, E.D., and Bauer, P.G., 1971, Preliminary geologic map of the Loma Prieta-Mount Madonna area, Santa Clara and Santa Cruz Counties, California: U.S. Geological Survey Open-File Report, scale 1:24,000.

McNitt, J.R., 1968, Geological map and section of Kelseyville quadrangle, Mendocino, Lake, and Sonoma Counties, California: California Division of Mines and Geology Map Sheet 9, scale 1:62,500.

Merriam, C.L., and Turner, F.E., 1937, The Capay middle Eocene of northern California: University of California, Department of Geological Sciences Bulletin 24, p. 91-114.

Merriam, J.C., 1897, The geologic relations of the Martinez group of California at the typical locality: Journal of Geology, v. 5, p. 767-775.

Michelin, James, 1943, Sargent oil field: California Division of Mines Bulletin 118, p. 475-476.

Morse, R.R., and Bailey, T.L., 1935, Geologic observations in the Petaluma District, California: Geological Society of America Bulletin, v. 46, no. 10, p. 1437-1456.

Newton, R.J., 1948, The geology northwest of Dublin, California, in the vicinity of Divide Ridge: Berkeley, University of California, M.A. thesis, 38 p.

Ojakangas, R.W., 1968, Cretaceous sedimentation, Sacramento Valley, California: Geological Society of America Bulletin, v. 79, no. 8, p. 973-1008.

Olmsted, F.H., and Davis, G.H., 1961, Geologic features and ground-water storage capacity of the Sacramento Valley, California: U.S. Geological Survey Water-Supply Paper 1497, 241 p.

Osmont, V.C., 1905, A geological section of the Coast Ranges

north of the Bay of San Francisco: University of California, Department of Geology Bulletin, v. 4, no. 3, p. 39-87.

Page, B.M., 1950, Geology of the Broadway Tunnel, Berkeley Hills, California: Economic Geology, v. 45, no. 2, p. 142-166.

Palache, Charles, 1893, The soda-rhyolite north of Berkeley: University of California, Department of Geology Bulletin, v. 1, no. 2, p. 61-70.

Pampeyan, E.H., 1963, Geology and mineral deposits of Mount Diablo, Contra Costa County, California: California Division of Mines and Geology Special Report 80, 31 p.

———1964, Franciscan and related rocks of the Mount Diablo piercement, Contra Costa County, California, *in* Guidebook to the Mount Diablo field trip, 1964: Davis, Calif., Geological Society of Sacramento, p. 1-8.

———1970, Geologic map of the Palo Alto 7-1/2 minute quadrangle, San Mateo and Santa Clara Counties, California: U.S. Geological Survey Open-File Report, scale 1:12,000.

Payne, M.B., 1951, Type Moreno formation and overlying Eocene strata on the west side of the San Joaquin Valley, Fresno and Merced Counties, California: California Division of Mines Special Report 9, 29 p.

———1960, Type Panoche, Panoche Hills area, Fresno County, California: Society of Economic Paleontologists and Mineralogists, Pacific Section, field trip guidebook, 18 p.

———1962, Type Panoche Group (Upper Cretaceous) and overlying Moreno and Tertiary strata on the west side of the San Joaquin Valley, *in* Geologic guide to the gas and oil fields of northern California: California Division of Mines and Geology Bulletin 181, p. 165-175.

Pease, M.H., 1954, Geology of the Sobrante anticline and vicinity, Contra Costa County, California: Berkeley, University of California, M.A. thesis, 92 p.

Primmer, S.R., 1964, Preliminary report on the type Kirker Formation, *in* Guidebook to the Mount Diablo field trip, 1964: Davis, Calif., Geological Society of Sacramento, p. 60-69.

Radbruch, D.H., 1964, Log for field trip through Caldecott Tunnel, Berkeley Hills, California: U.S. Geological Survey Open-File Report, 3 p.

———1969, Areal and engineering geology of the Oakland East quadrangle, California: U.S. Geological Survey Geologic Quadrangle Map GQ-769, scale 1:24,000.

Radbruch, D.H., and Case, J.E., 1967, Preliminary geologic map and engineering geologic information, Oakland and vicinity, California: U.S. Geological Survey Open-File Report, scale 1:24,000.

Radbruch, D.H., and Weiler, L.M., 1963, Preliminary report on landslides in a part of the Orinda Formation, Contra Costa County, California: U.S. Geological Survey Open-File Report, 35 p.

Reiche, Perry, 1950, Geology of part of the Delta-Mendota canal near Tracy, California: California Division of Mines Special Report 2, 12 p.

Robinson, G.D., 1953, The Leona Rhyolite, Alameda County, California: American Mineralogist, v. 38, no. 11-12, p. 1204-1217.

———1956, Geology of the Hayward quadrangle, California: U.S. Geological Survey Geologic Quadrangle Map GQ-88, scale 1:24,000.

Rymer, M.J., 1981, Stratigraphic revision of the Cache Formation (Pliocene and Pleistocene), Lake County, California: U.S. Geological Survey Bulletin 1502-C, 35 p.

Sarna-Wojcicki, A.M., 1971, Correlation of late Cenozoic pyroclastic deposits in the central Coast Ranges of California: Berkeley, University of California, Ph.D. thesis, 173 p.

———1976, Correlation of late Cenozoic tuffs in the central Coast Ranges of California by means of trace- and minor-element chemistry: U.S. Geological Survey Professional Paper 972, 30 p.

Schlocker, Julius, and Bonilla, M.G., 1963, Engineering geology of the proposed nuclear power plant site on Bodega Head, Sonoma County, California: U.S. Geological Survey Report TEI-844, 37 p.

Schlocker, Julius, Bonilla, M.G., and Clebsch, Alfred, Jr., 1963, Geologic and seismic investigations of a proposed nuclear power plant site on Bodega Head, Sonoma County, California: U.S. Geological Survey Report TEI-837, pt. 1, 51 p.

Sheehan, J.R., 1956, The structure and stratigraphy of northwestern Contra Costa County, California: Berkeley, University of California, M.S. thesis, 59 p., scale 1:24,000.

Sims, J.D., Fox, K.F., Jr., Bartow, J.A., and Helley, E.J., compilers, 1973, Preliminary geologic map of Solano County and parts of Napa, Contra Costa, Marin, and Yolo Counties, California: U.S. Geological Survey Miscellaneous Field Studies Map MF-484, scale 1:62,500, 5 sheets.

Snow, D.T., 1957, The geology of the northeast corner of Alameda County and adjacent portions of Contra Costa County, California: Berkeley, University of California, M.A. thesis, 158 p.

Society of Economic Paleontologists and Mineralogists, Pacific Section, 1950, Guidebook to annual spring field trip, north Mount Diablo monocline.

Taff, J.A., 1935, Geology of Mount Diablo and vicinity: Geological Society of America Bulletin, v. 46, no. 7, p. 1079-1100.

Taliaferro, N.L., 1948, Geologic map of the Hollister quadrangle, California: California Division of Mines Bulletin 143, scale 1:62,500.

Templeton, E.C., 1912, The geology and stratigraphy of the San Jose quadrangle, California: Stanford, Calif., Stanford University, M.A. thesis, 84 p.

Thomasson, H.G., Jr., Olmsted, F.H., and LeRoux, E.F., 1960, Geology, water resources, and usable ground-water storage capacity of part of Solano County, California: U.S. Geological Survey Water-Supply Paper 1464, 693 p.

Tolman, C.F., 1931, Geology of upper San Francisco Bay region with special reference to a salt water barrier below confluence of Sacramento and San Joaquin Rivers: California Division of Water Resources Bulletin 28, app. D, p. 309-359.

———1934, Geology of the Murphy damsite on Stevens Creek, Santa Clara County, California: Stanford, Calif., report to Santa Clara Valley Water Conservation District, 42 p.

Tolman, F.B., 1943, Potrero Hills gas field: California Division of Mines Bulletin 118, p. 595-598.

Trask, P.D., 1922, The Briones formation of middle California: University of California, Department of Geological Sciences Bulletin, v. 13, no. 5, p. 133-174.

Travis, R.B., 1952, Geology of the Sebastopol quadrangle, California: California Division of Mines Bulletin 162, 33 p., scale 1:62,500.

Turner, H.W., 1891, The geology of Mount Diablo, California: Geological Society of America Bulletin, v. 2, p. 383-402.

U.S. Geological Survey, 1972, Slope map of the San Francisco Bay region, California: U.S. Geological Survey, scale 1:125,000, 3 sheets.

Vitt, A.W., 1936, The Pinole tuff east of San Francisco Bay: Berkeley, University of California, M.A. thesis, 70 p.

Wagner, J.R., 1978, Late Cenozoic history of the Coast Ranges east of San Francisco Bay: Berkeley, University of California, Ph.D. thesis, 160 p.

Wahrhaftig, Clyde, 1970, The geologic setting of Bolinas Lagoon: Washington, D.C., Conservation Foundation.

Weaver, C.E., 1909, Stratigraphy and paleontology of the San Pablo formation in middle California: University of California, Department of Geology Bulletin, v. 5, p. 243-269.

——— chairman, 1944, Correlation of the marine Cenozoic formations of western North America: Geological Society of America Bulletin, v. 55, no. 5, p. 569-598.

———1949, Geology of the Coast Ranges immediately north of the San Francisco Bay region, California: Geological Society of America Memoir 35, 242 p.

———1953, Eocene and Paleocene deposits at Martinez, California: Seattle, University of Washington Publications in Geology, v. 7, p. 1-102.

Webb, S.D., and Woodburne, M.O., 1964, The beginning of continental deposition in the Mount Diablo area, *in* Guidebook to the Mount Diablo field trip, 1964: Davis, Calif., Geological Society of Sacramento, p. 70-78.

Welch, L.E., 1964, Soil associations of Mount Diablo and vicinity, Contra Costa County, California, *in* Guidebook to the Mount Diablo field trip, 1964: Davis, Calif., Geological Society of Sacramento, p. 99-101.

Wentworth, C.M., 1966, The Upper Cretaceous and Lower Tertiary rocks of the Gualala area, northern Coast Ranges, California: Stanford, Calif., Stanford University, Ph.D. thesis, 197 p., scale 1:62,500.

Young, G.J., 1929, Driving the Claremont Tunnel: Engineering and Mining Journal, v. 127, no. 21, p. 832-834.

☆ U.S. GOVERNMENT PRINTING OFFICE: 1995 - 673-046 / 20012 REGION NO. 8

U.S. DEPARTMENT OF THE INTERIOR

MARCH 3, 1849