GEOHYDROLOGIC RECONNAISSANCE OF THE AVOCA LIGNITE DEPOSIT AREA NEAR WILLISTON, NORTHWESTERN NORTH DAKOTA

By W. F. Horak and Orlo A. Crosby

U.S. GEOLOGICAL SURVEY

Water-Resources Investigations Report 85-4024

Bismarck, North Dakota

1985

UNITED STATES DEPARTMENT OF THE INTERIOR

DONALD PAUL HODEL, Secretary

GEOLOGICAL SURVEY

Dallas L. Peck, Director

For additional information
write to:

District Chief
Water Resources Division
U.S. Geological Survey
821 East Interstate Avenue
Bismarck, ND 58501

Copies of this report can be
purchased from:

Open-File Services Section
Western Distribution Branch
U.S. Geological Survey
Box 25425, Federal Center
Denver, CO 80225
(Telephone: (303) 236-7476)

CONTENTS

ILLUSTRATIONS

ILLUSTRATIONS, Continued

TABLES

SELECTED FACTORS FOR CONVERTING INCH-POUND UNITS TO THE INTERNATIONAL SYSTEM OF UNITS (SI)

For those readers who may prefer to use the International System of Units (SI) rather than inch-pound units, the conversion factors for the terms used in this report are given below.

Multiply inch-pound unit	By	To obtain SI unit
Acre	0.4047	hectare
Cubic foot per second (ft^3/s)	28.32	liter per second
Cubic yard (yd^3)	0.7646	cubic meter
Foot (ft)	0.3048	meter
Foot per day (ft/d)	0.3048	meter per day
Gallon per minute (gal/min)	0.06309	liter per second
Gallon per minute per foot [(gal/min)/ft]	0.207	liter per second per meter
Inch (in.)	25.40	millimeter
Mile	1.609	kilometer
Square mile (mi^2)	2.590	square kilometer
Ton (short, 2,000 pounds)	0.9072	metric ton

To convert degrees Fahrenheit (°F) to degrees Celsius (°C), use the following formula: °C = (°F-32)x5/9.

National Geodetic Vertical Datum of 1929 (NGVD of 1929): A geodetic datum derived from a general adjustment of the first-order nets of both the United States and Canada, formerly called "mean sea level."

Milligrams per liter (mg/L) is a unit expressing the concentration of a chemical constituent in solution as weight (milligrams) of solute per unit volume (liter) of water. One mg/L equals 1,000 μg/L (micrograms per liter).

GEOHYDROLOGIC RECONNAISSANCE OF THE AVOCA LIGNITE DEPOSIT AREA NEAR WILLISTON, NORTHWESTERN NORTH DAKOTA

By W. F. Horak and Orlo A. Crosby

ABSTRACT

The Avoca lignite deposit in the Sentinel Butte Member of the Fort Union Formation consists of four potentially strippable lignite beds. Average bed thicknesses, in descending order, are 5, 5, 9, and 8 feet. In the area between Stony Creek and Crazy Man Coulee, the lignite beds are unsaturated, and between Stony Creek and Little Muddy River, only the two lowest beds are saturated. Natural discharge to outcrops in the stream valleys results in low potentiometric levels in the lignite beds.

Aquifers in sandstone beds in the Fox Hills Sandstone and the Hell Creek Formation probably would yield as much as 50 gallons per minute of sodium bicarbonate type water. Dissolved-solids concentrations range from 800 to 2,000 milligrams per liter. The aquifers are from 1,100 to 1,800 feet below land surface. Sandstone beds in the Ludlow and Cannonball Members of the Fort Union Formation probably could yield several gallons per minute of sodium bicarbonate water with dissolved-solids concentrations ranging from 800 to 2,000 milligrams per liter. Aquifers in the Ludlow and Cannonball Members lie between 700 and 1,300 feet below land surface. Individual sand beds in the Tongue River and Sentinel Butte Members of the Fort Union Formation are the shallowest aquifers encountered below the minable lignite beds. Properly constructed wells completed in these sand beds could yield as much as 40 gallons per minute. The water generally is a sodium bicarbonate type with dissolved-solids concentrations ranging from about 500 to 4,200 milligrams per liter. Alluvium and glacial-drift deposits constitute the Little Muddy aquifer bordering the lignite deposit on the west and south. The aquifer could yield as much as 1,200 gallons per minute of sodium bicarbonate type water with dissolved-solids concentrations ranging from 975 to 1,730 milligrams per liter.

Little Muddy Creek and Stony Creek have significant base flow. The flow is contributed partly by discharge from the lignite. Quality of water is least mineralized at high stream flows. Mining would not severely affect ground-water levels because potentiometric levels already are low. Chemically enriched leachate water from the spoils could percolate to the saturated zone and eventually reach the streams as base flow or recharge the glaciofluvial aquifers.

INTRODUCTION

Vast coal reserves underlying the northern Great Plains are the source of fuel for many electrical generating plants in various parts of the country. The coal and associated sandstone beds, however, also are important aquifers throughout much of the arid plains region. Concern about the potentially adverse effects that coal development might have on local water supplies prompted many hydrologic studies in recent years. This report is the product of such a study. This report describes the geology and water resources of a particular lignite deposit (all strippable coal in North Dakota is lignite grade) in western North Dakota.

The Avoca lignite deposit in the Sentinel Butte Member of the Fort Union Formation underlies an area of about 20 mi^2 immediately east and northeast of the city of Williston in south-central Williams County (fig. 1). The deposit lies in the glaciated part of the Great Plains province (Fenneman, 1946). It has been estimated that the four lignite beds constituting the Avoca lignite deposit contain about 380 million tons of lignite within 120 ft of the land surface (Pollard and others, 1972). The overall ratio of cubic yards of overburden to total tons of lignite in the deposit is about 4.5 to 1 in the Sentinel Butte Member of the Fort Union Formation (Great Northern Railway Company, 1966). The lignite occurs in a rather prominent upland area near the Missouri River.

Objectives

The objectives of this study were to: (1) Obtain water-resources information that would contribute to a historical data base for the Avoca lignite deposit area and (2) make a preliminary interpretation of the shallow geohydrologic regime of the area.

Geography

The Avoca lignite deposit in the Sentinel Butte Member of the Fort Union Formation lies within the glaciated area of the Great Plains province (fig. 1). Topographic relief in the Avoca lignite deposit area is much more pronounced than that of the moderately undulating landscape in the surrounding region. Much of the land, in fact, is steeply sloped and is used for pasturing of livestock. The relatively level stream valleys and upland divide areas are devoted to crop production.

The Avoca lignite deposit area is drained by three tributaries of the Missouri River (fig. 2). Little Muddy River drains the western part of the deposit area, Stony Creek drains the central and largest part of the area, and Crazy Man Coulee drains the southeastern part. In places, relief from the interstream uplands to the deeply incised adjacent valleys is as much as 200 ft in a distance of less than a mile. Altitudes in the study area range from about 2,340 ft in the uplands north of Crazy Man Coulee to 1,850 ft, the normal maximum pool altitude of Lake Sakakawea.

Long cold winters and short warm summers are characteristics of the area. A few nighttime lows in the -30°F range generally occur each winter,

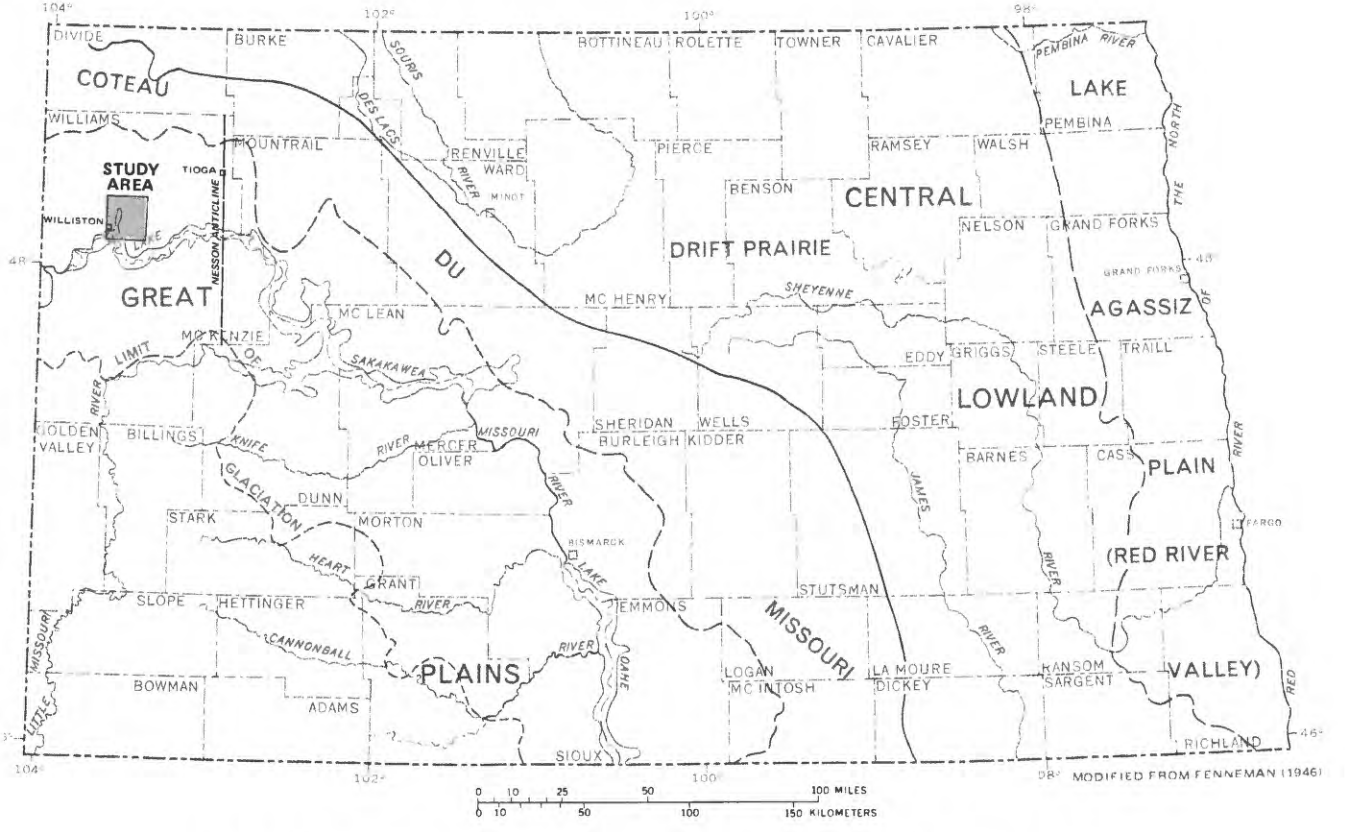

Figure 1.—Physiographic divisions in North Dakota and location of the Avoca lignite deposit in the Sentinel Butte Member of the Fort Union Formation.

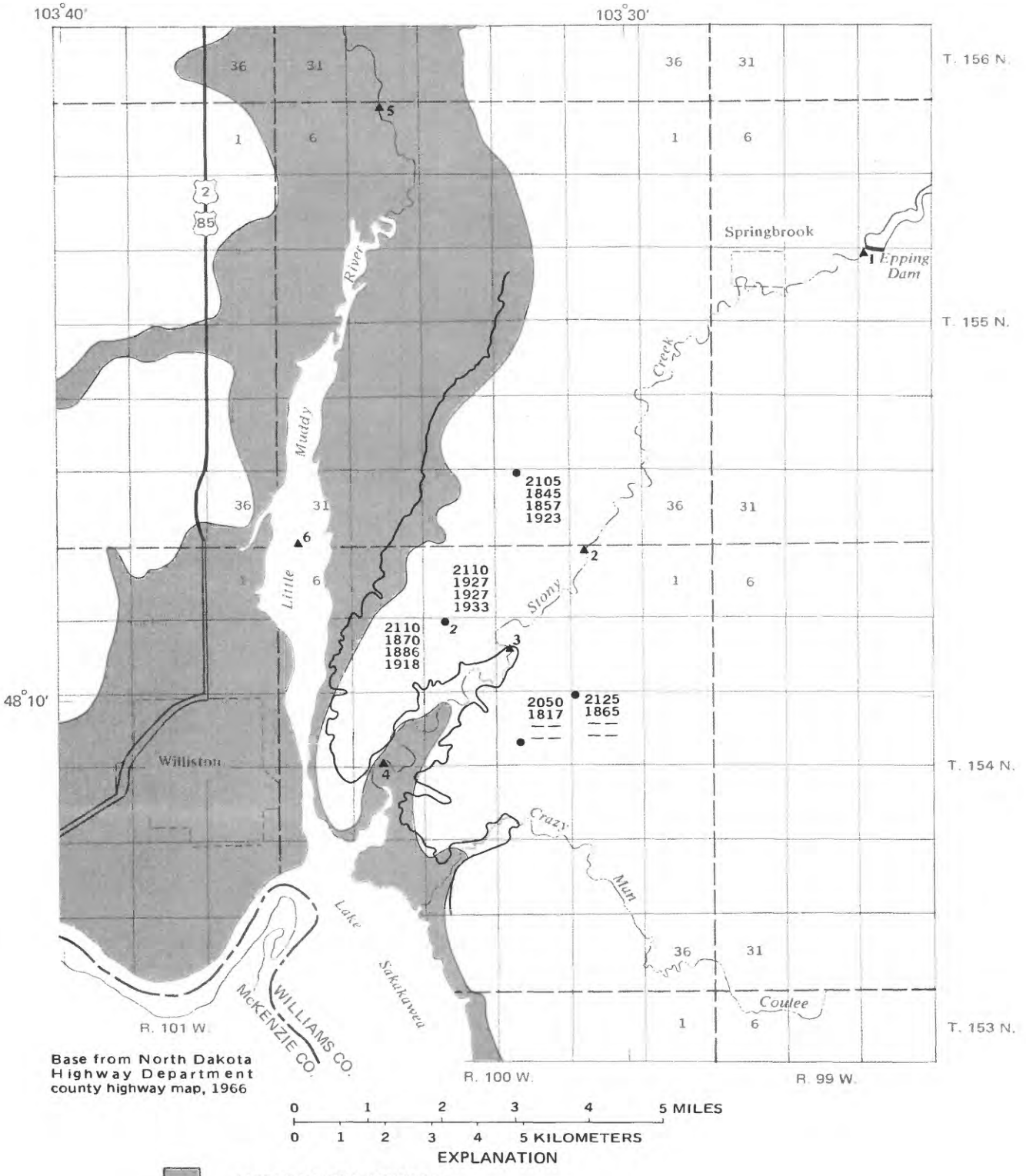

Figure 2.—Geohydrologic data for test holes and wells and location of surface-water monitoring sites.

and daily highs in the 90° to 100°F range normally are recorded several times each summer. The annual mean temperature at Williston is 40.9°F (U.S. Environmental Data Service, 1973). The length of the growing season, calculated as the number of days between the date of the last 32°F day in the spring and the date of the first 32°F day in the fall, ranges from about 110 to 130 days.

The study area lies in a semiarid region and has mean annual precipitation of 14.3 in. (U.S. Environmental Data Service, 1973). Significant to the agricultural industry, about 60 percent of the annual precipitation falls from April through July and nearly 75 percent falls from April through September. About one-fourth of the annual precipitation occurs as snow.

Local commerce is based largely on production and marketing of agricultural products, although Williston is a major commercial center for supplies and services to the Williston basin petroleum industry. An oil refinery and salt plant are located in Williston.

Prior to 1940, numerous small mines extracted lignite from the deposits mainly for local heating use. Five mines still operated in the Avoca lignite deposit area in 1950 (Brant, 1953). Only one small mine (1978 production--15,000 tons) still operates in the area.

Previous Investigations

Several previous investigations have involved study of the Avoca lignite deposit. Wilder (1902) described the locations of lignite exposures and detailed the lithology of some of the exposed sections. Herald (1913) described the geology and gave a fairly detailed account of the lignite resources of the Williston area. Dove and Eaton (Leonard and others, 1925) reported on the principal lignite beds of the Avoca lignite deposit and included a map showing mine locations. Brant (1953) presented location, thickness, and reserve data for the major lignite beds in Williams County and listed the name and location of mines operating in 1950. As part of a project to evaluate the coal resources of the Avoca lignite deposit, the Great Northern Railway Co. (1966) prepared structure-contour and overburden-thickness maps for each of the four lignite beds. All of the above data were the basis for the geologic interpretations in this report.

Howard (1960) studied the geology of northwestern North Dakota and northeastern Montana but concentrated almost entirely on the Pleistocene deposits. Schmid and Hoisveen (1961) investigated the geology of the Little Muddy River valley to determine the availability of ground water for irrigation use. Armstrong (1969) studied the ground-water resources and Freers (1970) studied the geology of Williams County as part of a cooperative county ground-water program between the North Dakota Geological Survey, North Dakota State Water Commission, and U.S. Geological Survey.

Location-Numbering System

The location-numbering system used in this report is based on the public-land classification system used by the U.S. Bureau of Land

Management. The system is illustrated in figure 3. The first numeral denotes the township north of a base line, the second numeral denotes the range west of the Fifth principal meridian, and the third numeral denotes the section in which the well is located. The letters A, B, C, and D designate, respectively, the northeast, northwest, southwest, and southeast quarter section, quarter-quarter section, and quarter-quarter-quarter section (10-acre tract). For example, location 155-100-15ADC is in the SW1/4SE1/4NE1/4 sec. 15, T. 155 N., R. 100 W. Consecutive final numerals are added if more than one well or test hole is recorded within a 10-acre tract.

GEOLOGY

The stratigraphic section beneath the study area consists of about 15,000 ft of sedimentary rocks. The lower 13,000 ft of strata consists of alternating beds of limestone, dolomite, shale, sandstone, and evaporites. The uppermost formation in this sequence, the Upper Cretaceous Pierre Shale, consists of some 1,000 to 2,000 ft of dark-gray marine shale (table 1). Rocks beneath the top of the Pierre Shale in western North Dakota generally are not considered economically feasible sources of potable water due to minimal permeability, excessive depth, and normally brackish or saline water. Varying thicknesses of glacial drift cover the land surface in most of the study area, and alluvial deposits occur along the stream valleys.

Fox Hills Sandstone and Hell Creek Formation (Upper Cretaceous)

The Fox Hills Sandstone is a marine unit that consists of interbedded sandstone, siltstone, and shale. The sandstone generally is poorly consolidated but may be well cemented. Lignitic shale laminae are present in the upper part of the formation. The overlying Hell Creek consists primarily of lignitic and bentonitic claystone, shale, and sandstone. Concretions and siderite nodules are common, as are localized thin lignite beds.

The altitude of the top of the Fox Hills was picked at 440 ft at location 154-100-20 (R. D. Butler, U.S. Geological Survey, written commun., 1979). The top of the Hell Creek was picked at about 740 ft. The thickness ascribed to the Fox Hills is 280 ft, and the thickness ascribed to the Hell Creek is 300 ft (table 1).

Fort Union Formation (Tertiary)

Ludlow and Cannonball Members

Tertiary deposition in North Dakota apparently began with the fluvial sedimentation of the Ludlow Member of the Fort Union Formation. Nearly contemporaneously, a final transgression of the waning inland sea into western North Dakota resulted in the deposition of the marine Cannonball Member of the Fort Union Formation. The two members are lateral equivalents and may be described as intertonguing clastic wedges.

The Ludlow Member is composed of alternating beds of gray claystone, siltstone, and sandstone. The claystones and siltstones generally are

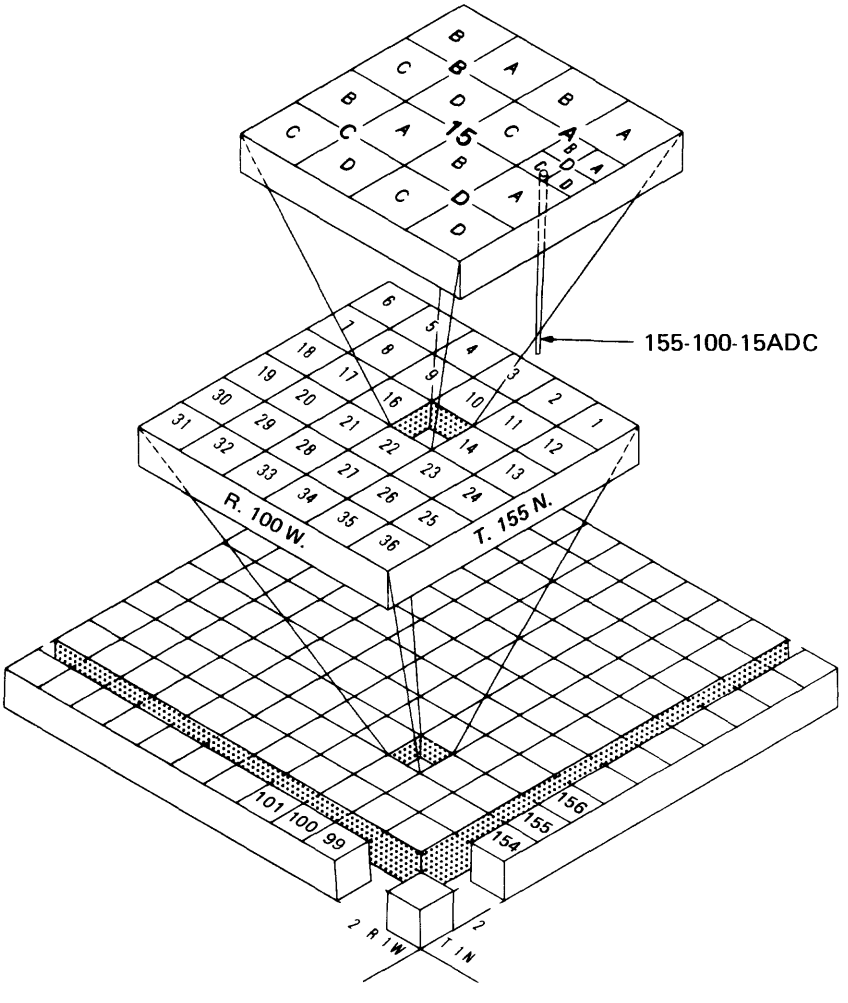

Figure 3.—Location-numbering system.

Table 1.--Generalized stratigraphy of rocks in the study area

Erathem	System	Series	Formation and member		Approximate thickness, in feet	Lithologic characteristics
Cenozoic	Quaternary	Holocene			0-30	Alluvium--Silt, sand, and clay.
		Pleistocene			0-300	Glacial till--Intermixed clay, silt, sand, and gravel. Glacial outwash--Stratified silt, sand, and gravel.
	Tertiary	Paleocene	Fort Union Formation	Sentinel Butte Member	700 to 800	Interbedded claystone, siltstone, sandstone, and lignite. (Includes Avoca lignite deposit.)
				Tongue River Member		Massive buff to gray claystone, siltstone, sandstone, and lignite.
				Cannonball Member / Ludlow Member	210	Cannonball Member: greenish-gray marine claystone, siltstone, and minor sandstone. Ludlow Member: gray claystone, siltstone, and sandstone. Thin lignite beds common.
Mesozoic	Cretaceous	Upper Cretaceous	Hell Creek Formation		300	Lignitic and bentonitic claystone, shale, and sandstone. Localized thin lignite beds.
			Fox Hills Sandstone		280	Grayish-white sandstone and interbedded gray siltstone and shale. Lignitic shale laminae in upper part.
			Pierre Shale		1,000 to 2,000	Dark-gray fissile marine shale with thin limestone concretions.

poorly consolidated; the sandstone is moderately cemented in places. Thin lignite beds also are common throughout the member. The Cannonball Member is composed of claystone, siltstone, and minor occurrences of sandstone--all poorly consolidated.

The top of the Ludlow and Cannonball strata is at an altitude of about 950 ft, and the combined thickness is about 210 ft (R. D. Butler, written commun., 1979).

Tongue River and Sentinel Butte Members

The contact between the Tongue River Member and the overlying Sentinel Butte Member is not well defined in the area; thus, the two members have been considered as an undifferentiated unit (Tongue River-Sentinel Butte) in this report and generally in prior reports. Small outcroppings of the Tongue River-Sentinel Butte are plentiful in the valleys of the Little Muddy River, Stony Creek, and Crazy Man Coulee (fig. 2). Major exposures occur in the bluffs overlooking the Missouri River.

Tongue River strata may directly underlie glacial drift in the deeper parts of the buried valley beneath the Little Muddy River, but strata of the Sentinel Butte Member generally are the uppermost bedrock deposits in the area. The top of the Sentinel Butte is an erosional surface throughout the study area. Depth to the Sentinel Butte averages about 20 ft in the uplands and can be much more than 100 ft in the stream valleys.

Lithologies of the Tongue River and the Sentinel Butte Members are very nearly the same. Both members consist of claystone, siltstone, sandstone, and lignite, although the claystone and lignite are the prevalent lithologies associated with the Avoca lignite deposits. Thicknesses of individual beds range from less than an inch to several feet and can change greatly within short lateral distances. The lignites generally have the most areally consistent thicknesses. The only significant thickness of sandstone penetrated in any of the four test holes, which averaged 210 ft in depth, was a single 16-ft thick bed. Data are not available to assess the occurrence of sandstone units in the lower part of the Tongue River-Sentinel Butte section.

A maximum of 700 ft of Tongue River-Sentinel Butte strata is reported in southern Divide County (Hansen, 1967; p. 23). A pick on the top of the Cannonball Member at an altitude of 950 ft at location 154-100-20 indicates a combined thickness in the 700- to 800-ft range (R. D. Butler, written commun., 1979).

Regional structural dip of pre-Tertiary sediments in the Williston area is southerly except near the north-striking Nesson anticline in eastern Williams County (Sandberg, 1962). However, the lignite beds in the Avoca lignite deposit generally dip northeasterly. Data are not available to determine the extent of this structure trend beyond the present study area.

Lignite Resources

Data from 39 test holes drilled in the Avoca lignite deposit in the Sentinel Butte Member of the Fort Union Formation by the Great Northern Railway Co. (1966) and data from the four test holes drilled for this project indicate four potentially strippable lignite beds. Herald (1913) referred to the beds as A through D, and the Great Northern Railway Co. (1966) designated them beds 1 through 4, numbered from top to bottom. The latter system will be used in this report.

Bed 1 averages about 5 ft in thickness. Maximum overburden is about 160 ft in sec. 26, T. 155 N., R. 100 W. Bed 2 also averages about 5 ft in thickness and lies about 16 ft below bed 1. Beds 1 and 2 have been eroded throughout much of the study area. Bed 3 averages about 9 ft in thickness and lies at an average depth of about 70 ft below bed 2. Bed 4 averages 8 ft in thickness and lies about 38 ft below bed 3. Each bed outcrops or subcrops along the valley walls of Little Muddy River, Stony Creek, and Crazy Man Coulee.

All beds dip in a general northeasterly direction. Bed 4, however, has a local structural high beneath the drainage divide between Stony Creek and Crazy Man Coulee. Thus, in the northern part of the area, bed 4 dips opposite the topographic gradient and, in the southeast, the structure approximately parallels the topography. The structure contours on plate 1 are drawn on the top of bed 4.

Quaternary Deposits

In the interstream areas, glacial-till deposits that average about 20 ft thick mantle a bedrock topography only slightly modified from pre-Pleistocene time. Much thicker glacial-drift deposits are found in the Little Muddy River valley, a feature believed to have been eroded by an ancestral course of the Yellowstone River (Howard, 1960). Combined thicknesses of 120 to 150 ft of alluvium, glacial till, and stratified glaciofluvial materials are common in the Little Muddy River valley within the present study area. At one location (155-100-32BAA), however, 284 ft of alluvium and glacial-drift deposits were penetrated (Schmid and Hoisveen, 1961). Thicknesses of individual beds of stratified sand and gravel ranged from less than 1 to 50 ft, and cumulative thicknesses of sand and gravel beds throughout the section ranged from less than 1 to 70 ft. These beds, however, seem to have limited lateral persistence.

Drill-hole data are not available to evaluate the deposits in the valleys of Stony Creek and Crazy Man Coulee. Alluvial material lies at the surface in their downstream reaches, but it is not known how thick the alluvium is or if it is underlain by glacial drift.

GROUND-WATER RESOURCES

Aquifers occur in all the formations underlying the study area. The depth of the deeper aquifers, however, has precluded their development in the study area.

Aquifers in the Fox Hills Sandstone and Hell Creek Formation

The aquifers associated with the Fox Hills Sandstone and Hell Creek Formation have been defined both as entirely within the individual formations and as aquifers occurring in parts of both formations. In some areas the sandstone beds in the Fox Hills have an apparent hydraulic connection with those in the lower part of the Hell Creek, and in some areas the upper sandstone beds in the Hell Creek are associated with the lower part of the Ludlow Member of the Fort Union Formation.

Extensive sandstone beds in the Fox Hills constitute a popular and widely used aquifer in southwestern North Dakota and in parts of South Dakota, Wyoming, and Montana. Sandstone beds occurring at various horizons within the Hell Creek constitute aquifers, but many are quite localized.

Aquifers in the Fox Hills and Hell Creek generally will yield as much as 50 gal/min of water to wells. The aquifers have not been utilized in the study area. Well depths would have to be from about 1,100 to 1,800 ft.

Aquifers in the Ludlow and Cannonball Members of the Fort Union Formation

County ground-water study reports for most parts of western North Dakota represent the Ludlow and Cannonball Members as a single undifferentiated unit. Investigators described individual sandstone beds within the undifferentiated unit as aquifers. Because very few data are available concerning the stratigraphy or hydrology of the unit in the vicinity of the study area, generalizations must be made from other parts of the State.

Aquifers within the Ludlow-Cannonball unit commonly are 20 to 50 ft thick. Although these aquifers generally will yield several gallons of water per minute to properly constructed wells, they are almost undeveloped in the study area. Well depths would have to be from about 700 to 1,300 ft.

Aquifers in the Tongue River and Sentinel Butte Members of the Fort Union Formation

Channel-sand deposits and lignite beds constitute aquifers in the Tongue River and Sentinel Butte Members. Although sandstone and lignite beds several feet thick occur sporadically throughout the section, the thickest and most consistently occurring sands and lignites lie in the lower parts of the individual members. The sand beds do not represent a physical continuum but, on a regional scale, probably represent a somewhat uniform hydraulic system. Some of the lignite beds persist throughout large areas and are regionally important aquifers; others underlie small areas and serve only as localized, but often indispensable aquifers.

Yields of as much as 40 gal/min have been reported from wells east of the study area near Tioga (Armstrong, 1969). Properly constructed wells completed in several sandstone lenses probably could produce more than 40 gal/min.

Test holes were drilled at four locations (fig. 2) as part of this study. Observation wells were installed at two of the sites, including one double-well completion at 154-100-09BAB. Observation wells were completed in lignite beds 3 and 4 at 154-100-09BAB and in bed 4 at 155-100-34BAB. Both test holes penetrated all four lignite beds. At 154-100-09BAB, beds 1 and 2 were unsaturated (lignite drill cuttings surfaced as black dust) and beds 3 and 4 were saturated. At 155-100-34BAB, beds 1 and 2 were unsaturated and bed 4 was saturated. The water-bearing condition of bed 3 could not be ascertained at this site. In test hole 154-100-14BBB, all four lignite beds were present and were unsaturated. In test hole 154-100-15CAC, beds 1 and 2 were absent and beds 3 and 4 were unsaturated.

Water-level data show that bed 4 is a confined aquifer at both well locations. The water level is 25 ft above the top of bed 4 in well 154-100-09BAB and 54 ft above bed 4 in well 155-100-34BAB. At 154-100-09BAB, bed 3 is an unconfined aquifer because the water level is 2 ft below the top of the bed.

Water-level altitudes in the two wells penetrating bed 4 indicate a very slight potentiometric gradient to the south. The slight (5-ft) potentiometric difference, however, is within the range of accuracy of the land-surface altitudes derived from topographic maps. The vertical component of gradient (0.37) between beds 3 and 4, as indicated by the two water levels at 154-100-09BAB, is clearly downward.

Although the two wells, 154-100-09BAB and 155-100-34BAB, are at nearly the same altitude, there is a definite downward topographic trend from northeast to southwest on the interstream highland between Stony Creek and the Little Muddy River. The effect on the potentiometric surface normally manifest by topography in this type of setting is modified here by the structural dip, which is directly opposed to the topographic gradient. Thus, ground-water movement from northeast to southwest is very sluggish. Data are not available to illustrate it, but lateral ground-water movement would be predominately toward the northwest and southeast, approximately normal to the steep topographic contours along the valley walls.

Recharge to the lignite aquifers beneath the upland between Stony Creek and the Little Muddy River occurs through infiltration and downward percolation of local precipitation. Discharge occurs along the outcrop and subcrop areas in the valleys of Stony Creek and the Little Muddy River.

Beneath the interstream highland between Stony Creek and Crazy Man Coulee, the structure contours of bed 4 show that the lignite generally slopes toward the stream valleys. This structural trend contributes to the unsaturated state of bed 4 penetrated in test holes 154-100-14BBB and 154-100-15CAC. In times of normal precipitation, ground water percolating downward from the land surface probably flows laterally with the structural and topographic gradient to discharge in the bedrock outcrop and subcrop areas along Stony Creek and Crazy Man Coulee before meeting the storage capacity of the bed 4 lignite aquifer.

The only permeable strata of significant thickness penetrated between the land surface and lignite bed 4 were other lignites. Virtually the rest of the section was confining clays and silts. Data are not available to determine the depth to the first aquifer underlying bed 4. The test holes drilled for this study show only clay to a depth 40 ft below bed 4.

Aquifer in Quaternary Deposits

Little is known of the hydrology of the Little Muddy aquifer (fig. 3) within the study area, but it undoubtedly has the potential of yielding more water than any other aquifer in the study area. Armstrong (1969, p. 40) indicated that parts of the aquifer (not necessarily in the present study area) should be capable of yielding as much as 1,200 gal/min to irrigation wells. Schmid and Hoisveen (1961) found varying thicknesses of glaciofluvial sand and gravel deposits beneath the valley of Little Muddy River within the study area. In the N1/2 sec. 12, T. 154 N., R. 101 W., a cumulative thickness of 70 ft of sand and gravel deposits was penetrated between the depths of 3 and 135 ft. The altitude of the top of the uppermost permeable bed was 1,870 to 1,880 ft, somewhat below the inferred outcrop of lignite bed 4 (pl. 1).

Armstrong (1969, p. 40) reported a hydraulic conductivity for the gravel deposits of about 800 ft/d and a specific capacity of one well of 62 (gal/min)/ft of drawdown in the northern reach of the aquifer (158-100-17). However, the aquifer has a consistently greater thickness and areal extent in that area than in the study area. The hydraulic head in the lower part of the aquifer in T. 158 N., R. 100 W., is higher than that in the upper part. Although water-level data are not available for the aquifer within the study area, lithologic logs indicate that the uppermost aquifer zone is unconfined and the lower zones are confined. Intervening confining beds are clay and till.

Recharge to the Little Muddy aquifer is derived from direct infiltration of precipitation, underflow from adjacent bedrock deposits and from small glaciofluvial deposits in tributary valleys, and leakage from the bed of the Little Muddy River. The outcrop of lignite bed 4 is above the top of the Little Muddy aquifer, but deeper bedrock units probably have direct hydraulic connection with the glacial aquifer. Discharge from the shallow lignite aquifers as spring flow and stream base flow probably reaches the glacial aquifer.

SURFACE-WATER RESOURCES

Except for a few miscellaneous measurements, no historical runoff or water-quality data are available for Crazy Man Coulee. A discharge and water-quality gaging station was established on Stony Creek near Williston (site 4, fig. 3) on October 12, 1977, as part of a U.S. Geological Survey program to establish a network of monitoring stations throughout the area of potential energy development of the United States. Continuous records of discharge are available through September 1981. The average discharge for the period of record is 8.08 ft^3/s. The annual average discharge for this size drainage area (146 mi^2), based on regression analyses from records of

nearby stations, is 15 ft^3/s. The maximum peak discharge for the period of record (3,120 ft^3/s in 1979) is considerably less than the estimated 50-year recurrence interval flood of 5,200 ft^3/s (Crosby, 1975).

The duration curve for the station (fig. 4) indicates a condition of fast runoff from snowmelt or summer storms and little base flow. The curve is somewhat biased because of 14 consecutive months (June 1979 through July 1980) of less than normal precipitation, which resulted in an anomalous period of no flow. Base-flow conditions are better indicated by mean monthly discharge values (in cubic feet per second) as follows: January, 0.19; February, 6.14; March, 20.2; April, 61.4; May, 3.46; June, 1.16; July, 3.81; August, 0.06; September, 0.08; October, 0.25; November, 0.30; and December, 0.57.

On October 11, 1974, the base flow in Stony Creek was estimated to be between 0.2 and 0.4 ft^3/s (table 2). Sites 2 and 3 are upstream from the outcrop of lignite bed 4 and site 4 is downstream from the outcrop (fig. 2). These estimates and the measurement of 0.7 ft^3/s at site 4 on November 11, 1975, and a no flow observation at site 1 on November 12, 1975, indicate a pronounced contribution to base flow in the reach of stream where the outcrop of lignite bed 4 occurs. No flow was observed on the west-flowing tributaries of the Little Muddy River and Crazy Man Coulee on October 11, 1974.

Continuous records of streamflow are available for Little Muddy River at location 155-100-31CDC (site 6, fig. 2) for April 1946 to September 1954 and scattered earlier periods. Streamflow records at site 5 are available for May 1954 to the present (June 1984). These records established that the stream had a large base flow. The records for this stream contributed little information as to the hydrology of the Avoca lignite deposit.

GROUND-WATER QUALITY

Armstrong (1969) was not able to determine the quality of water in aquifers in the Fox Hills Sandstone and Hell Creek Formation or in aquifers in the Cannonball and Ludlow Members in Williams County due to the paucity of wells completed in these units. Samples collected from the aquifers in other parts of western North Dakota show that each unit yields a sodium bicarbonate type water (see, for example, Anna, 1981). Dissolved-solids concentrations ranged from about 800 to 2,000 mg/L. Sodium usually constituted more than 90 percent of the cations, and bicarbonate generally constituted more than 60 percent of the anions. The water was soft but frequently had the "rotten egg" odor indicative of hydrogen sulfide gas.

Armstrong (1969, p. 28) reported that ground water of the Tongue River-Sentinel Butte interval in Williams County generally contains large proportions of sodium and bicarbonate. Water in the shallower parts of the interval, however, contained a larger proportion of calcium and magnesium. Dissolved solids ranged from 538 to 4,160 mg/L. The three wells installed during this study were not sampled for chemical analysis because they could not be properly developed.

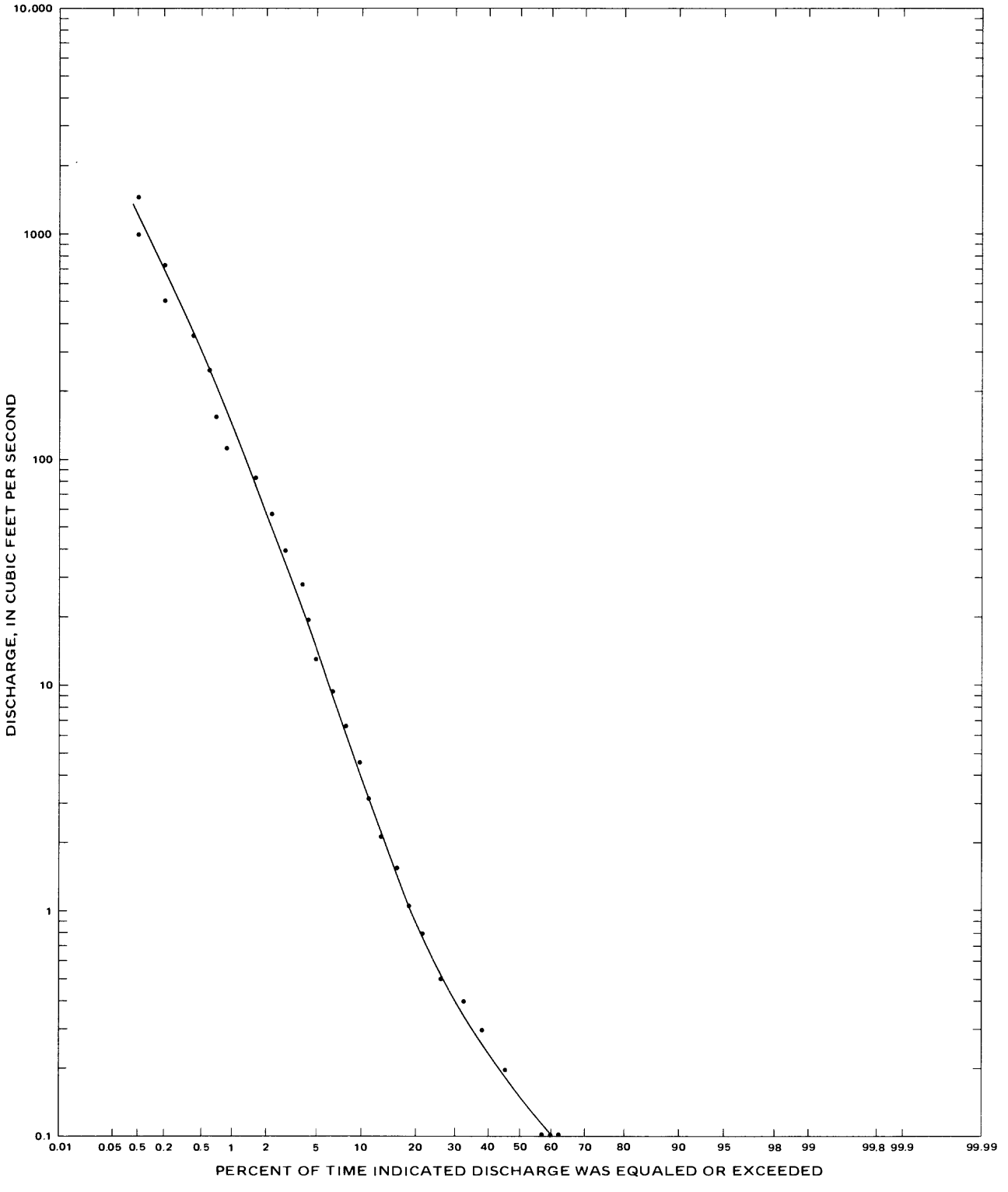

Figure 4.—Duration curve of daily flow for Stony Creek near Williston, October 1977 to September 1981.

Table 2.--Miscellaneous discharge and specific-conductance measurements on Stony Creek and Little Muddy River

[mi^2, square miles; ft^3/s, cubic feet per second; µmho/cm, micromhos per centimeter at 25° Celsius]

Site	Name	Drainage area (mi^2)	Date	Discharge (ft^3/s)	Specific conductance (µmho/cm)
1	Stony Creek near Springbrook (155-099-16BBB)	43	03/19/75	28.2	650
			11/12/75	0	--
2	Stony Creek (154-100-02BBA)		10/11/74	a/.2	2,400
3	Stony Creek (154-100-10BCD)		10/11/74	a/.2	2,100
4	Stony Creek near Williston (154-100-17CDD)	146	10/11/74	a/.4	2,000
			03/19/75	22	710
			04/19/75	687	400
			11/11/75	.7	3,100
5	Little Muddy River below Cow Creek near Williston (155-100-05BA)	875	03/19/75	79	--
			04/19/75	1,220	--
			11/11/75	16	--
6	Little Muddy River near Williston (155-100-31CDC)	916	Continuous record 1946-54	--	--

a/Estimated.

Analyses of samples from the Little Muddy aquifer within the study area shows sodium bicarbonate type water (Armstrong, 1967, table 4). Dissolved-solids concentrations ranged from 975 to 1,730 mg/L.

SURFACE-WATER QUALITY

Stony Creek at Williston was sampled three times during 1975--in March near the beginning of spring breakup of ice and snow from the winter, in April at or near the peak of the spring high-flow period, and in November during the base-flow period after plant transpiration had ceased for the season. Samples were collected about monthly from October 1977 to June 1981. Specific conductance was measured at the time the samples were collected. A plot of specific conductance versus discharge (fig. 5) indicates a fairly consistent specific conductance (2,500 $\pm$ 500 micromhos) when discharge was less than 0.8 ft^3/s and a general decrease with discharges greater than 0.8 ft^3/s. Flows less than 0.8 ft^3/s apparently represent ground-water discharge to the stream.

Sodium generally was the dominant cation in all samples and represented 46 to 85 percent of the cations. Lesser concentrations of sodium and greater concentrations of calcium and magnesium were present during periods of high flow. Bicarbonate and sulfate were the dominant anions, with bicarbonate slightly greater in all the samples. Dissolved-solids concentration ranged from 142 mg/L at a discharge of 337 ft^3/s to about 1,900 mg/L at very low flows. By the same inverse correlation of ion concentration with streamflow magnitude, fluoride ranged from 0.1 mg/L at 337 ft^3/s to 0.7 mg/L at 0.18 ft^3/s, and hardness (as $CaCO_3$) ranged from 75 mg/L at 337 ft^3/s to 390 mg/L at 0.45 ft^3/s. The pH of the samples ranged from 8.0 to 8.7.

Stony Creek near Williston (site 4) was sampled for determination of suspended-sediment concentration on March 19 and November 11, 1975, and monthly starting in October 1977. The concentrations ranged from 16 to 1,370 mg/L for samples obtained through June 1981. The greater concentrations were determined at the higher flows. Correlation is poor between discharge and concentration. Unsuitable sampling conditions make data suspect at extremely low flow.

HYDROLOGIC IMPLICATIONS OF MINING

The four lignite beds of the Avoca deposit are the only permeable bedrock units of significant areal extent within the minable stratigraphic sequence. Natural discharge to deeply incised surface drainages precludes the saturation of lignite beds 1 and 2 throughout the study area and of lignite beds 3 and 4 in the uplands between Stony Creek and Crazy Man Coulee. Where lignite beds 3 and 4 are saturated, they either are under water-table conditions or under small-head confined conditions. Because potentiometric heads are already low, mining-induced declines, in terms of feet of drawdown in water wells at least a few thousand feet removed from the mine site, probably would not be large. Even small potentiometric declines, however, could significantly affect the present aquifer discharge manifest as stream base flow.

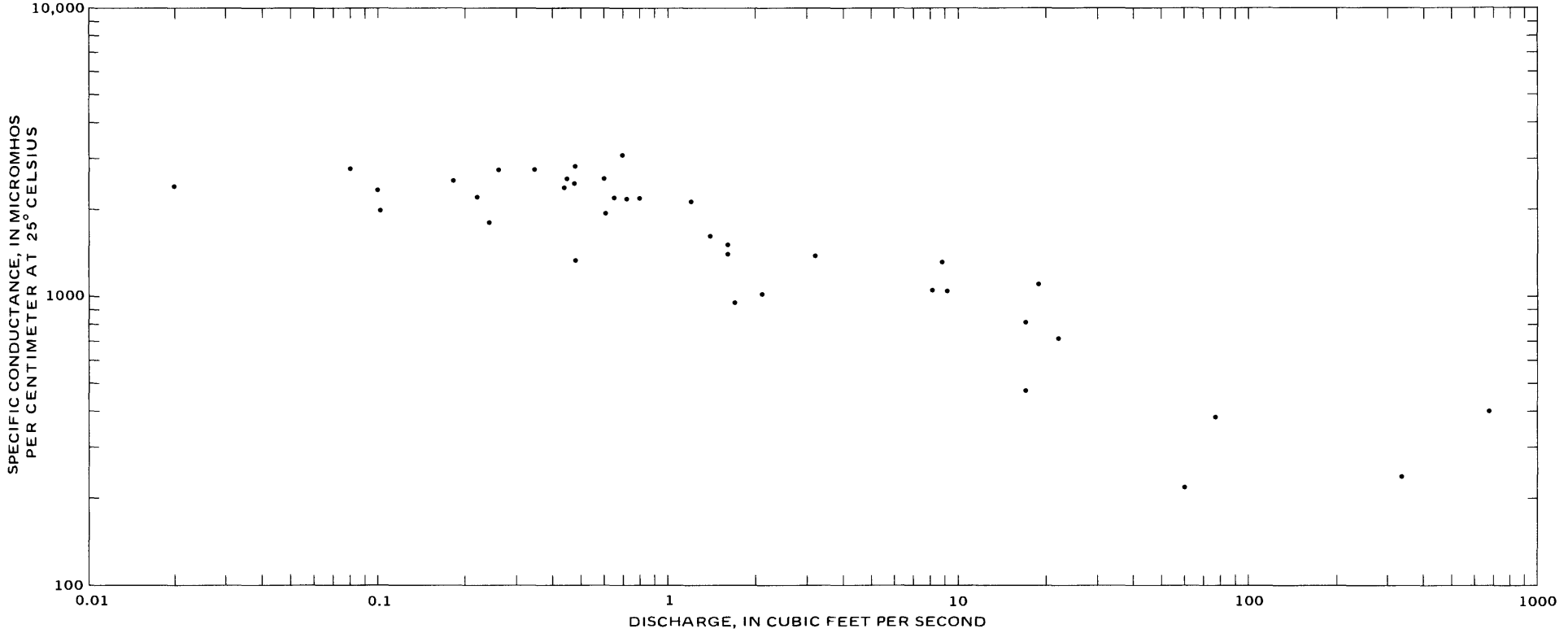

Figure 5.—Plot of specific conductance versus discharge for Stony Creek near Willistion, October 1977 to June 1981.

An analysis by Great Northern Railway Co. (1966) showed that, in order to recover from 80 to 100 million tons of lignite (an average tonnage for the duration of a modern strip mine) from the Avoca lignite deposit, an overall ratio of about 4.5 yd^3 of overburden would need to be removed for each ton of lignite mined--a relatively large ratio by current North Dakota standards. A great volume of earth, therefore, would be exposed to physical and chemical weathering at any given time. Chemically enriched leachate water percolating through spoils could reach the saturated zone, flow with the prevailing hydraulic gradient, and discharge in the river valleys either to become stream base flow or to recharge the glaciofluvial aquifers as underflow.

The prevalence of steep topography in the Avoca lignite deposit area could result in soil or, in general, earth erosion after the ground cover is disturbed. Such erosion and concomitant stream sedimentation would need to be controlled.

SUMMARY

Concern about the possible hydrologic effects of coal development prompted a reconnaissance study of several lignite deposit areas in western North Dakota. The purpose of the study was to: (1) Obtain water-resources information that would contribute to a historical data base for each area and (2) make a preliminary interpretation of the shallow geohydrologic regime of each area. This report presents the study results for the Avoca lignite deposit near Williston, N. Dak.

The stratigraphic section beneath the study area includes about 15,000 ft of sedimentary rock, but only those units above the Upper Cretaceous Pierre Shale (that is, the uppermost 1,500 to 2,000 ft of strata) generally are considered as economically feasible sources of potable water. Bedrock units overlying the Pierre Shale include, in ascending order, the Fox Hills Sandstone, the Hell Creek Formation, and the Ludlow, Cannonball, Tongue River, and Sentinel Butte Members of the Fort Union Formation. The potentially strip-minable lignite exists in four beds in the Tongue River and Sentinel Butte Members that average, in descending order, about 5, 5, 9, and 8 ft thick. The beds are designated, in descending order, 1 through 4 in this report.

Extensive sandstone beds in the Fox Hills constitute an important regional aquifer and, generally, less continuous beds in the Hell Creek constitute local aquifers. Although well yields of as much as 50 gal/min are possible, aquifers in the Fox Hills and Hell Creek are not utilized in the study area--presumably because wells would have to be drilled to depths ranging from about 1,100 to 1,800 ft. Sandstone aquifers in the Ludlow and Cannonball Members commonly are 20 to 50 ft thick and generally will yield several gallons of water per minute to wells. Wells finished in these aquifers would have to be about 700 to 1,300 ft deep, but few such wells exist in the study area. Aquifers in the Fox Hills, Hell Creek, Ludlow, and Cannonball units generally yield a sodium bicarbonate type water and contain 800 to 2,000 mg/L dissolved solids.

Sandstone and lignite beds in the Tongue River and Sentinel Butte Members are important aquifers in parts of western North Dakota. Well yields of as much as 40 gal/min have been reported for a location near the study area. No sandstone beds were penetrated in the bedrock section above lignite bed 4 in the study area. Data were not available to ascertain whether sandstone beds occur at greater depth. Lignite beds 1 and 2 were unsaturated where penetrated, but lignite bed 3 was saturated at one site and lignite bed 4 at two of the four sites where lignite beds 3 and 4 were penetrated. Ground water in the deeper parts of the Tongue River-Sentinel Butte interval generally is a sodium bicarbonate type.

Alluvium and glacial-drift deposits as much as 284 ft thick constitute the Little Muddy aquifer, which borders the lignite deposit on the west and south. The aquifer has a much greater yield potential than any other in the study area. The water is a sodium bicarbonate type and contains from 975 to 1,730 mg/L dissolved solids.

Three Missouri River tributaries, Little Muddy River, Stony Creek, and Crazy Man Coulee, drain the study area. Little Muddy River and Stony Creek have significant base flow, contributed partly by discharge from the lignite. Stream water quality varies with discharge. Streamflow is least mineralized at high streamflows and most mineralized at low flows.

Mining effects on ground-water levels would not be significant. Greater effects on surface-water and ground-water quality probably would result from: (1) The susceptibility of the steep topography to erosion and ensuing stream sedimentation, and (2) the chemical enrichment of leachate water percolating through the great volumes of earth that would be exposed in strip mining the Avoca lignite deposit.

SELECTED REFERENCES

Anna, L. O., 1981, Ground-water resources of Billings, Golden Valley, and Slope Counties, North Dakota: North Dakota Geological Survey Bulletin 76, Part III, and North Dakota State Water Commission County Ground-Water Studies 29, Part III, 56 p.

Armstrong, C. A., 1967, Geology and ground-water resources, Williams County, North Dakota; Part II, Ground-water basic data: North Dakota Geological Survey Bulletin 48 and North Dakota State Water Commission County Ground-Water Studies 9, 132 p.

----1969, Geology and ground-water resources, Williams County, North Dakota; Part III, Hydrology: North Dakota Geological Survey Bulletin 48 and North Dakota State Water Commission County Ground-Water Studies 9, 82 p.

Brant, R. H., 1953, The lignite resources of North Dakota: U.S. Geological Survey Circular 226, 78 p.

Crosby, O. A., 1975, Magnitude and frequency of floods in small drainage basins in North Dakota: U.S. Geological Survey Water-Resources Investigation 19-75, 24 p.

Fenneman, N. M., 1946, Physical divisions of the United States: U.S. Geological Survey, scale 1:700,000 (Reprinted 1964).

Freers, T. F., 1970, Geology and ground-water resources, Williams County, North Dakota; Part I, Geology: North Dakota Geological Survey Bulletin 48 and North Dakota State Water Commission County Ground-Water Studies 9, 55 p.

Great Northern Railway Company, 1966, The Avoca lignite deposit, Williams County, North Dakota: Minnesota, Great Northern Railway Company Mineral Resource and Development Department Report No. 27, 65 p.

Hansen, D. E., 1967, Geology and ground-water resources, Divide County, North Dakota; Part I, Geology: North Dakota Geological Survey Bulletin 45 and North Dakota State Water Commission County Ground-Water Studies 6, 90 p.

Herald, F. A., 1913, The Williston lignite field, Williams County, North Dakota: U.S. Geological Survey Bulletin 531, p. 91-157.

Howard, A. D., 1960, Cenozoic history of northeastern Montana and northwestern North Dakota with emphasis on the Pleistocene: U.S. Geological Survey Professional Paper 326, 107 p.

Leonard, A. G., Babcock, E. J., and Dove, L. P., 1925, The lignite deposits of North Dakota: North Dakota Geological Survey Bulletin No. 4, 240 p.

Pollard, C. P., Smith, J. B., and Knox, C. C., 1972, Strippable lignite reserves of North Dakota, location, tonnage, and characteristics of lignite and overburden: U.S. Bureau of Mines Information Circular 8537, 37 p.

Sandberg, C. A., 1962, Geology of the Williston basin, North Dakota, Montana, and South Dakota, with reference to subsurface disposal of radioactive wastes: U.S. Geological Survey Trace Elements Investigation 809, 148 p.

Schmid, R. W., and Hoisveen, M. W., 1961, Report on ground-water availability for irrigation purposes in the Little Muddy valley area, Williams County, North Dakota: North Dakota State Water Commission Ground-Water Studies No. 36, 22 p.

U.S. Environmental Data Service, 1973, Monthly normals of precipitation, and heating and cooling degree days, 1941-1970: U.S. Department of Commerce, National Oceanic and Atmospheric Administration, Climatology of the United States, No. 81 (By State), North Dakota.

U.S. Geological Survey, 1974, Stripping coal deposits of the northern Great Plains, Montana, Wyoming, North Dakota, and South Dakota: U.S. Geological Survey Miscellaneous Field Studies Map, MF-590.

Wilder, F. H., 1902 [1903], Second annual biennial report: North Dakota Geological Survey, 262 p.