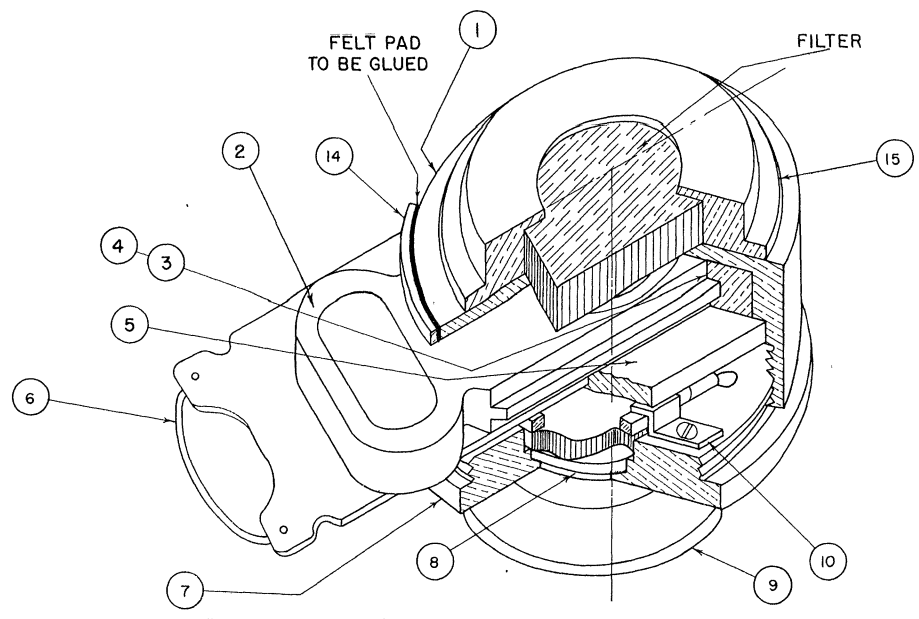

"FLUORIMETER" ASSEMBLY WITH BOTTOM FILTER PLATE TYPE "A"
CUTAWAY SECTION EXPOSING CONSTRUCTION, SHUTTER OPEN

		SIZE	NUMBER REQUIRED	MATERIAL
	SLIDE ADAPTER RING		4	BRASS
	FLAT - HEAD SCREW	6 - 32 x 5/16	4	"
	FLAT - HEAD SCREW	8 - 32 x 5/8	4	"
	FILLISTER - HEAD MACHINE SCREW	2 - 56 x 1/8	1	"
	HEADLESS SET SCREW	4 - 40 x 3/8	1	"
	BUTTON - HEAD SCREW	4 - 40 x 1/4	12	"
	BUTTON - HEAD SCREW	8 - 32 x 1/4	2	"
1	FLUORIMETER HOUSING		1	"
2	SAMPLE SLIDE		1	"
3	SLIDE GUIDE, RIGHT		1	"
4	SLIDE GUIDE, LEFT		1	"
5	SHUTTER SLIDE		1	"
6	SHUTTER		1	"
7	BOTTOM FILTER PLATE		1	"
8	PLATE FLANGE		1	"
9	SPANNER NUT		1	"
10	FILTER CLIP		4	"
11	FILTER CLIP		4	"
12	FILTER PLATE		1	"
13	FILTER RING		2	"
14	BLACK - OUT PLATE		1	"
15	TOP PLATE		1	"

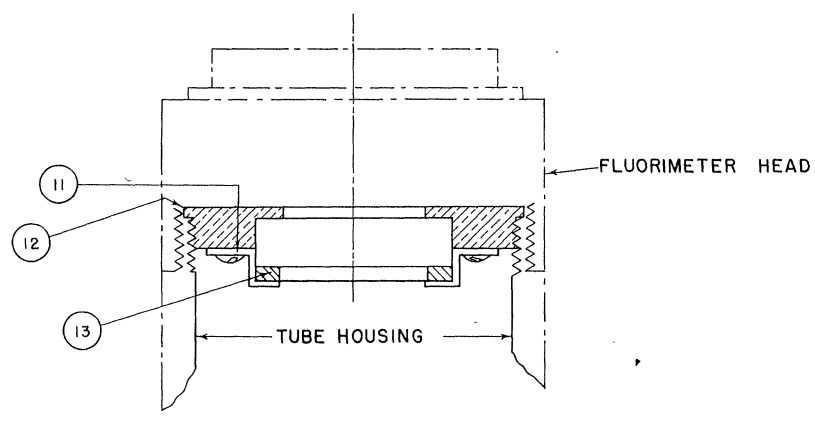

CROSS SECTION OF BOTTOM FILTER PLATE "B"
AT ASSEMBLY IN TUBE
"FLUORIMETER"

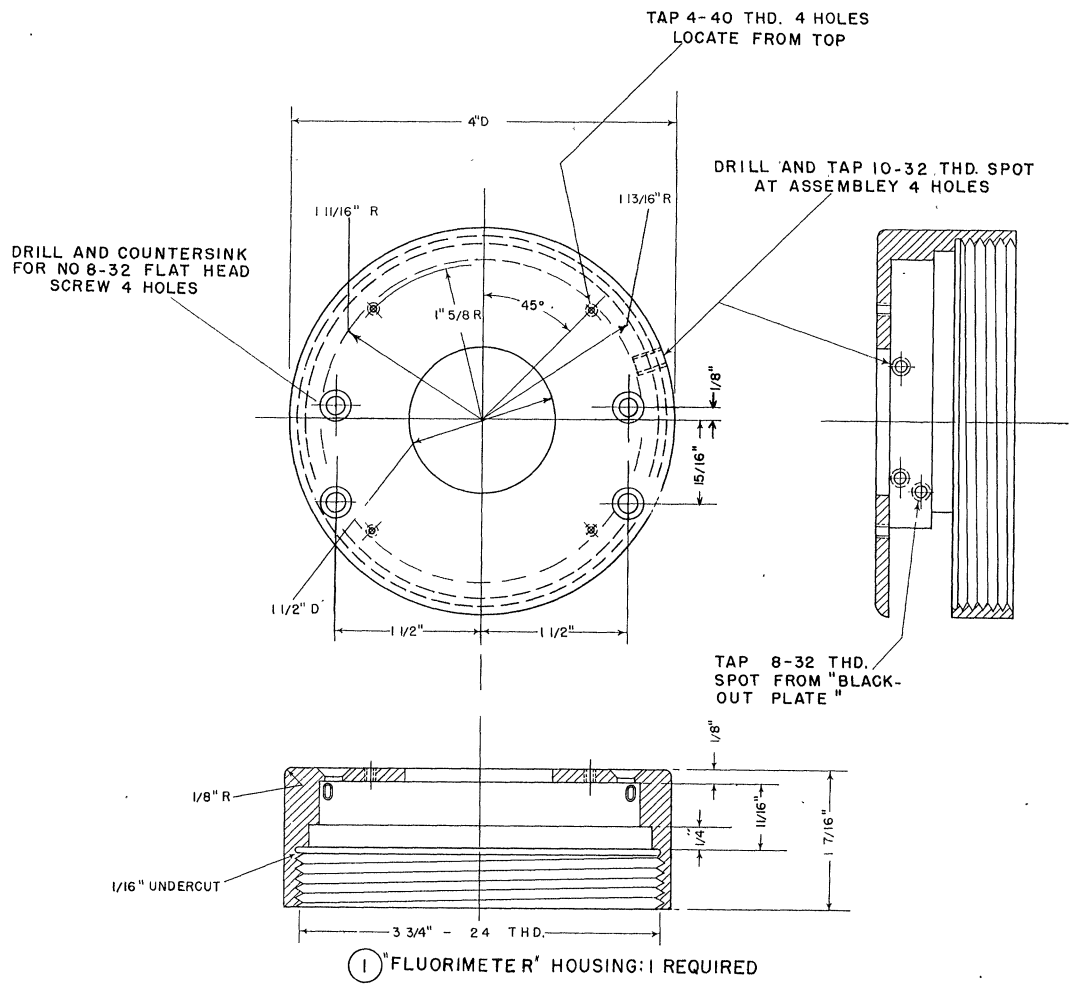

(1) "FLUORIMETER" HOUSING: 1 REQUIRED

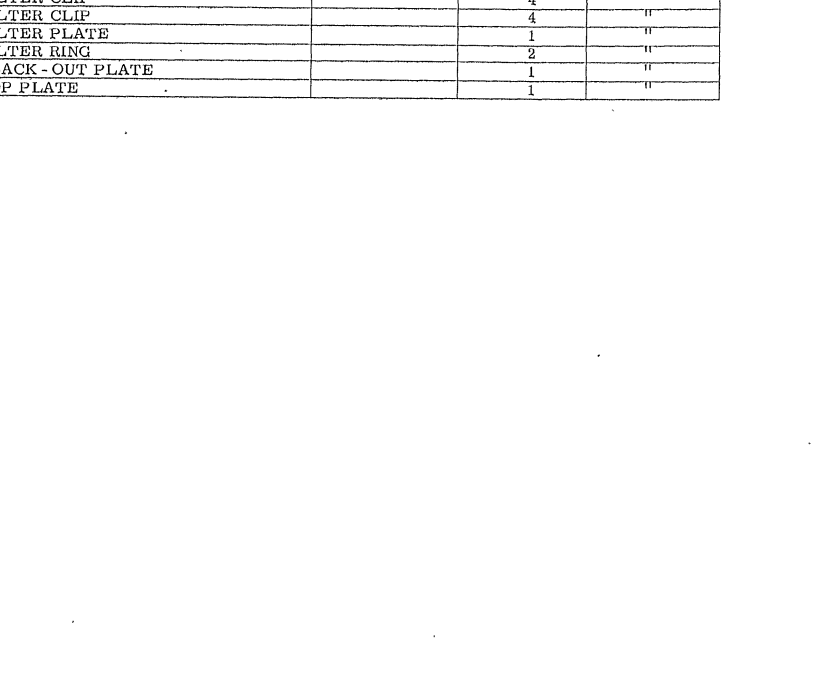

SLIDE GUIDE: 2 REQUIRED; 1 RIGHT HAND
AS SHOWN AND 1 LEFT HAND OR OPPOSITE
(3) (4)

(2) SAMPLE SLIDE: 1 REQUIRED

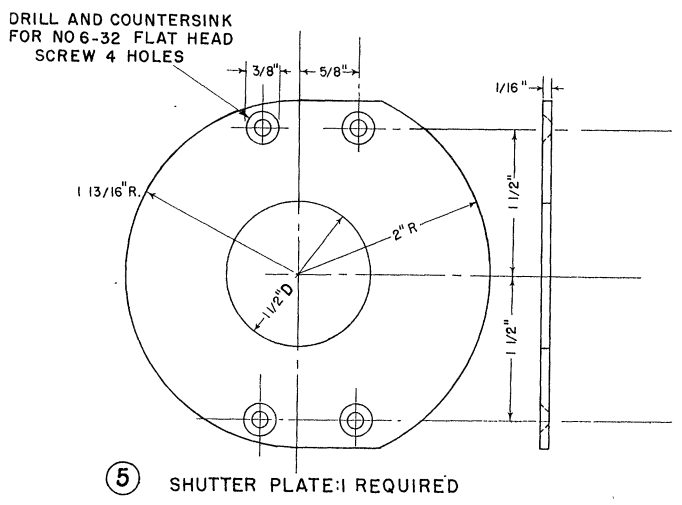

(5) SHUTTER PLATE: 1 REQUIRED

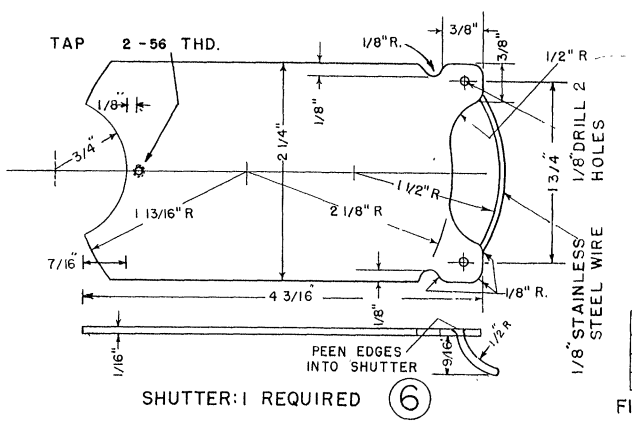

SHUTTER: 1 REQUIRED (6)

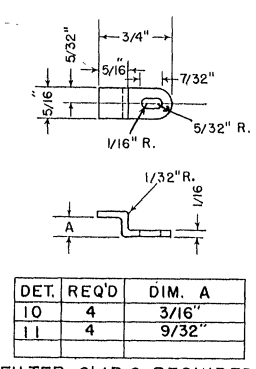

DET.	REQ'D	DIM. A
10	4	3/16"
11	4	9/32"

FILTER CLIP: 8 REQUIRED
(10) (11)

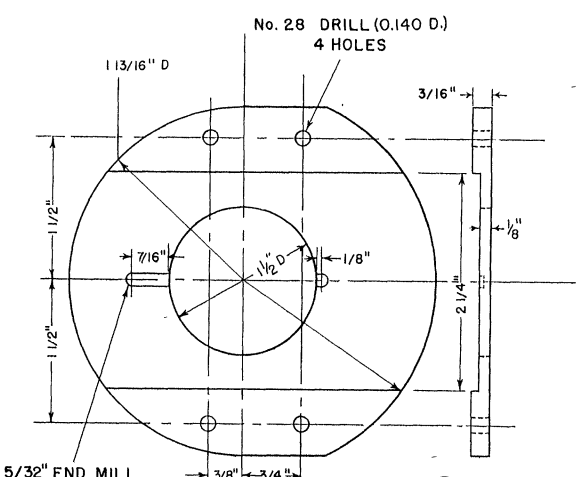

SHUTTER SLIDE: 1 REQUIRED (5)

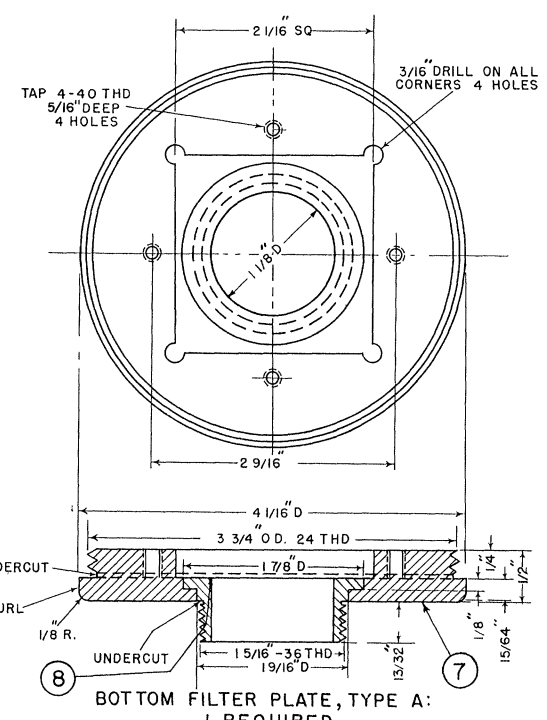

BOTTOM FILTER PLATE, TYPE A:
1 REQUIRED
(8) (7)

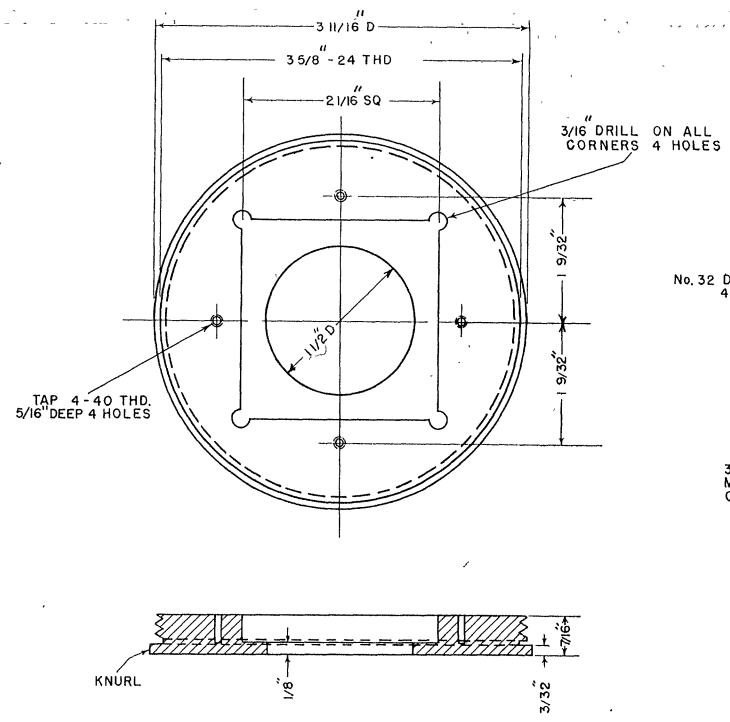

BOTTOM FILTER PLATE, TYPE B:
1 REQUIRED
(12)

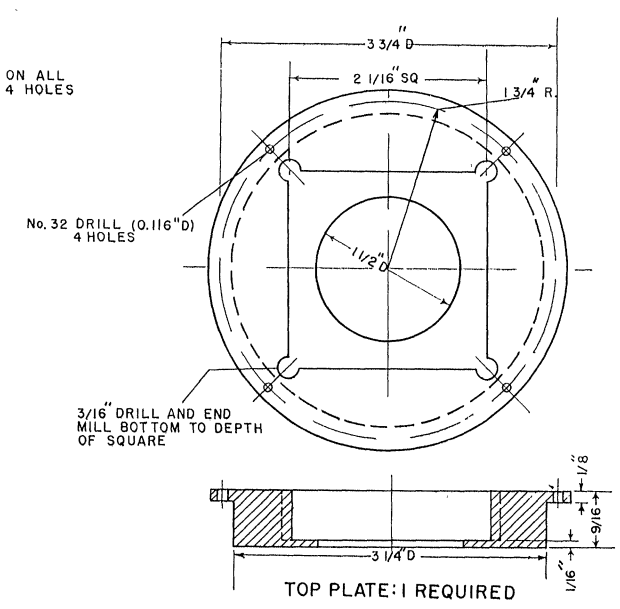

TOP PLATE: 1 REQUIRED
(15)

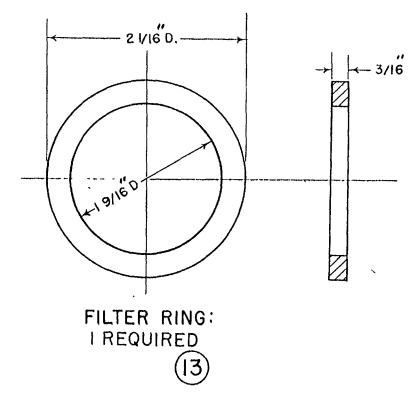

FILTER RING:
1 REQUIRED
(13)

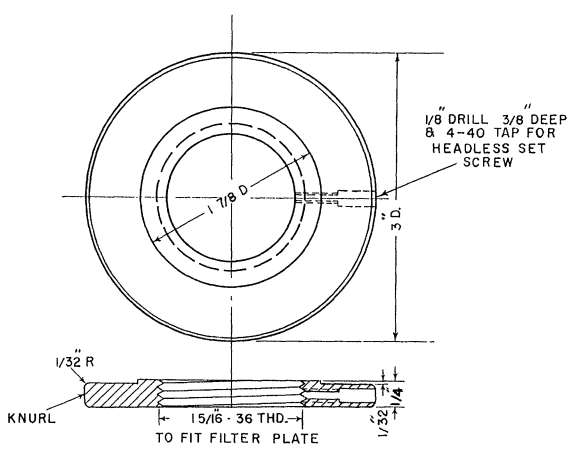

SPANNER NUT: 1 REQUIRED
(9)

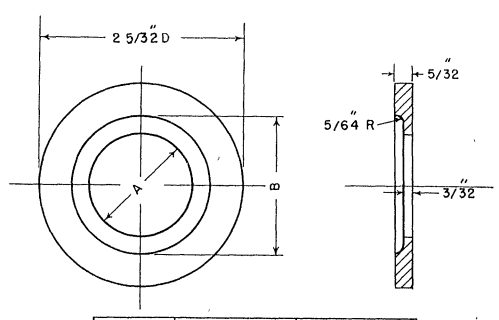

REQ'D	DIM. A	DIM. B
1	1.05" D	1.40" D
1	.80" D	1.15" D
1	.60" D	.95" D
1	.393" D	.743" D

ADAPTER RINGS: 4 REQUIRED

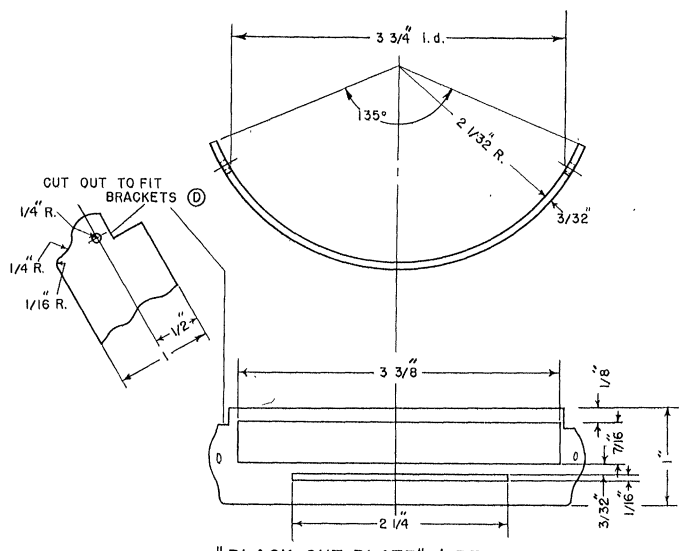

"BLACK-OUT PLATE": 1 REQUIRED;
EXTENDED LENGTH 5" (14)

CUTAWAY VIEW, CROSS SECTION, AND DETAILS OF PARTS OF "FLUORIMETER"

268681 O - 54 (In pocket) No. 3