Contributions to Geochemistry 1961–63

GEOLOGICAL SURVEY BULLETIN 1144

This volume was printed as separate chapters A–F

UNITED STATES DEPARTMENT OF THE INTERIOR

STEWART L. UDALL, *Secretary*

GEOLOGICAL SURVEY

Thomas B. Nolan, *Director*

CONTENTS

[The letters in parentheses preceding the titles designate separately paged and published chapters]

Rapid Analysis of Silicate, Carbonate and Phosphate Rocks

By LEONARD SHAPIRO *and* W. W. BRANNOCK

CONTRIBUTIONS TO GEOCHEMISTRY

GEOLOGICAL SURVEY BULLETIN 1144-A

UNITED STATES GOVERNMENT PRINTING OFFICE, WASHINGTON : 1962

UNITED STATES DEPARTMENT OF THE INTERIOR

STEWART L. UDALL, *Secretary*

GEOLOGICAL SURVEY

Thomas B. Nolan, *Director*

For sale by the Superintendent of Documents, U.S. Government Printing Office
Washington 25, D.C.

CONTENTS

ILLUSTRATIONS

TABLE

CONTRIBUTIONS TO GEOCHEMISTRY

RAPID ANALYSIS OF SILICATE, CARBONATE, AND PHOSPHATE ROCKS

By Leonard Shapiro and W. W. Brannock

ABSTRACT

The rapid methods used by the U.S. Geological Survey to determine the major constituents of silicate rocks have been improved and extended to include carbonate and phosphate rocks. Silica and alumina are determined spectrophotometrically on aliquots of a solution prepared by fusing the sample with NaOH; a molybdenum blue method is used for SiO_2; and alizarin red-S is used in the determination of Al_2O_3. A second portion of the sample is digested with HF-H_2SO_4-HNO_3 in Teflon beakers. This solution is used for the photometric determination of total iron with orthophenathroline, TiO_2 with tiron, P_2O_5 with molybdivanadophosphoric acid, MnO as permanganate after a persulfate oxidation, and low-level MgO with thiazol yellow. Automatic photometric titrations are used for CaO, MgO, and CaO + MgO. Visual titration methods also are described for CaO + MgO in carbonate and phosphate rocks. Flame photometry is used for Na_2O and K_2O. Separate portions of samples are used for the determination of FeO by titration with $K_2Cr_2O_7$ after decomposition with HF and H_2SO_4; H_2O by its weight when evolved by heating a mixture of sample plus flux; CO_2 by evolution with acid, high or low levels of CO_2 being measured either by change in volume upon alkaline absorption or by direct volume measurement; fluorine by its bleaching effect on the aluminum alizarin red-S complex; and aqua regia soluble sulfur is determined with $BaCl_2$. Mechanical devices for accurate and rapid measurement of solutions are described.

INTRODUCTION

The methods described here are those that are currently in use by the Geological Survey for rapid rock analysis. They are an outgrowth of the scheme of analysis originally presented by Shapiro and Brannock (1952) and revised by Shapiro and Brannock (1956). Since 1956 approximately 800 samples per year have been analyzed. During this period the methods for analyzing silicate rocks have been improved; the scheme of analysis has been modified and extended to include methods for carbonate and phosphate rocks.

Provision is made for the determination of SiO_2, Al_2O_3, total iron, FeO, MgO, CaO, TiO_2, MnO, P_2O_5, K_2O, Na_2O, H_2O, CO_2, F, and S. The complete scheme for the analysis of silicate, carbonate, and phosphate rocks is shown by the flow diagram in figure 1.

The methods have been designed so that optimum productivity is achieved by using about 30 samples for each determination. Prior to the adoption of a specially designed Teflon beaker (Shapiro, 1959a), the availability of large platinum crucibles limited the number of samples per batch.

It is the practice in this laboratory to analyze each sample two times, each time by different analysts. Results of one percent or higher are reported to the nearest tenth of a percent; results below one percent are reported to the nearest hundredth. For complete analyses, the averages of the summations are expected to be between 99.0 and 101.0. These methods are designed to give results that are comparable to those obtained by conventional gravimetric methods. Two recent studies (Fairbairn and others, 1951, and Stevens and others, 1960) of the results of conventional analyses made by a number of laboratories show the range of results obtained for each constituent in two silicate rock samples. The rapid methods described here provide data well within these ranges.

This manual provides procedures that can be used in handling the great bulk of routine work in rock analysis laboratories. Little attention has been given to the relatively rare occurrence of rocks containing appreciable amounts of constituents other than those typically found.

The methods for silicate and carbonate rocks are based on experience gained in the routine analysis of several thousand samples that included a wide variety of types, with many extremes in composition. However, experience with routine analysis of phosphate rocks has been limited to a few samples with typical compositions.

Some phosphate rocks of atypical composition may contain appreciable amounts of chromium, vanadium, lanthanum, and yttrium. We have found by experiment that these constituents when present in concentrations less than 0.1 percent in phosphate rocks have no measurable effect. There is no measurable effect by 1 percent of Cr_2O_3 on any determination. Concentrations of less than 1 percent V_2O_5 have an effect only on the TiO_2 determination, 0.1 percent V_2O_5 increasing the TiO_2 by 0.01 percent. The presence of 0.5 percent La_2O_3 affects only the visual Ca + MgO determination, to the extent of approximately 0.2 percent, calculated as CaO, for each 0.1 percent La_2O_3. Yttrium oxide affects the MgO determination, increasing it approximately 0.1 percent for each 0.2 percent Y_2O_3, to as much as 0.5 percent

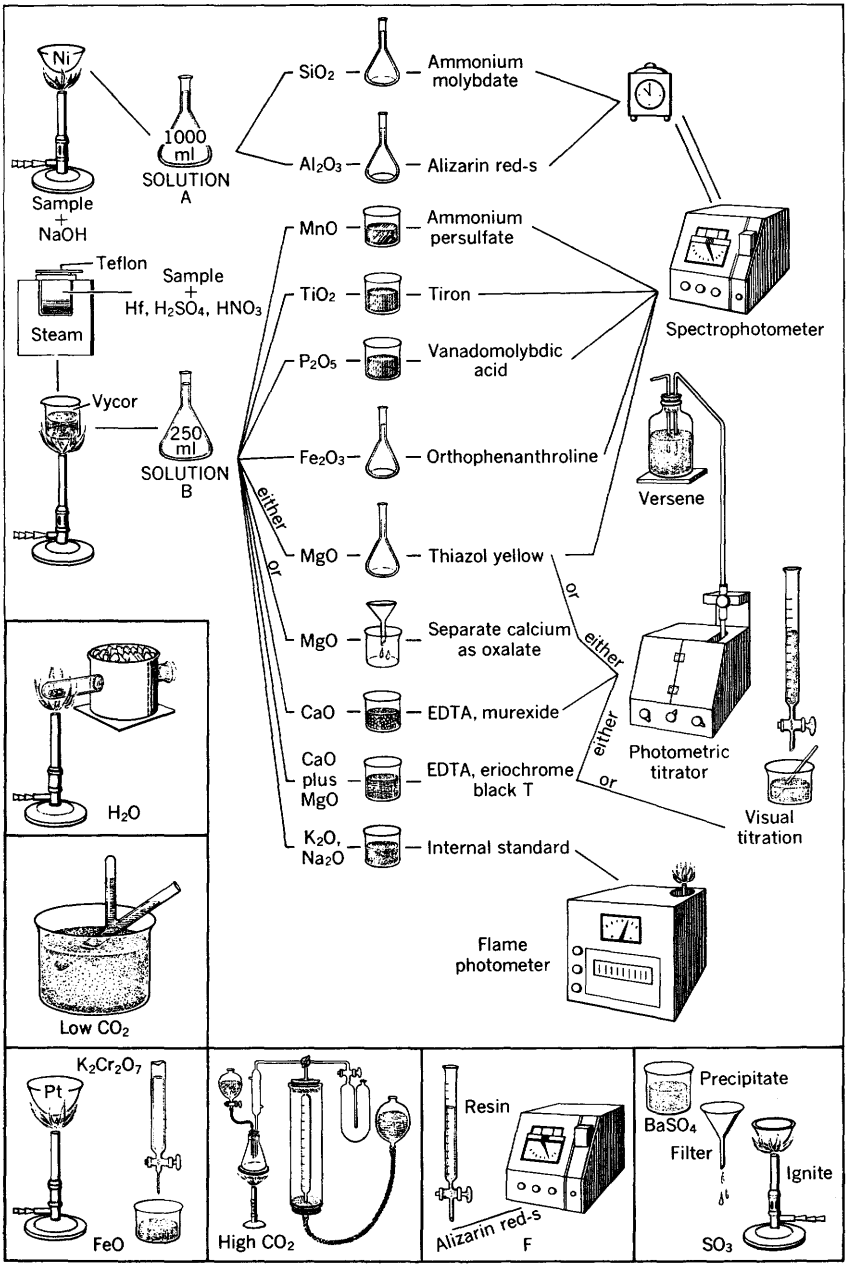

FIGURE 1.—Schematic diagram for the rapid analysis of rocks.

Y_2O_3. The visual CaO+MgO determination is depressed by 0.1 percent, calculated as CaO, for each 0.2 percent Y_2O_3.

The methods for the determination of ferrous iron and water are of limited applicability in the presence of significant amounts of organic matter. Phosphate and carbonate rocks, especially, may contain appreciable amounts of organic matter.

Figures 2, 11 and 12 are reproduced here through the courtesy of the J. T. Baker Chemical Co.

APPARATUS AND INSTRUMENTS

Most of the apparatus used in the methods described here is available in rock analysis laboratories. In addition to the more commonplace items, the following specialized types of apparatus are required: a spectrophotometer, a flame photometer, an automatic photometric titrator, a carbonate tube, a carbon dioxide evolution-absorption apparatus, stopcock pipets, Teflon and Vycor beakers, nickel crucibles, and a balance capable of weighing to the nearest 0.1 milligram. Additional pieces of equipment that are not essential but are desirable if many samples are to be analyzed include a multiple pipetting device used to transfer measured volumes of different solutions simultaneously and a pipetting machine used to transfer measured volumes of a single reagent rapidly into many vessels.

TEFLON BEAKERS

Teflon beakers are used in the preparation of B solutions. They are machined from bar stock and the covers are made from sheets of Teflon.

Teflon is unaffected by acids at steam-bath temperatures, but unlike platinum, it conducts heat poorly. To assure adequate heating for the decomposition of powdered samples, a beaker with a tightly fitting cover was designed which could be heated on the sides as well as the bottom by the steam of a steam-bath (fig. 2). The beakers are suspended through holes 1 13/16 inches in diameter in sheets of polypropylene, which replace the usual steam-bath rings. If the opening for these rings is 5 inches in diameter or larger, each polypropylene support will accommodate 3 or more beakers.

WATER-REPELLENT COATED PIPETS

The use of water-repellent coated pipets makes posssible a substantial saving of time. Rinsing between samples is eliminated as coated pipets retain only negligible quantities of liquid. With a coated pipet, aliquots from 30 samples can be easily taken in about 7 minutes. The precision is comparable to that with conventional pipets, but

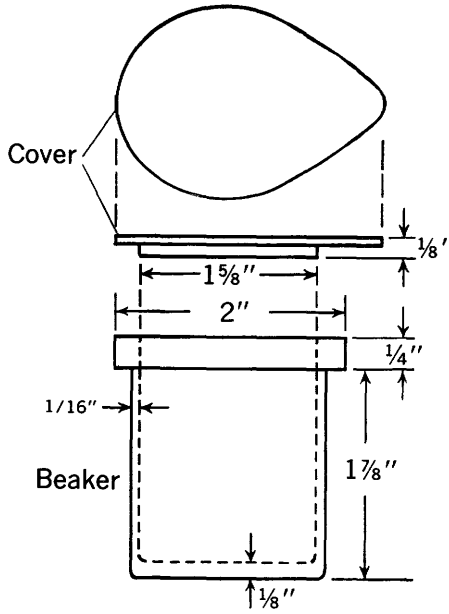

FIGURE 2.—Teflon beaker and cover.

as the volume may have been slightly altered it may be necessary to pipet both the samples and the standard with the same pipet, or to use pipets known to deliver practically equal volumes of solution. A delivery rate of about 10 seconds may be obtained by cutting and fire-polishing the tip. This rapid flow rate does not affect the reproducibility of the volume delivered by a coated pipet.

The pipet is coated with water repellent according to the directions of the manufacturer. Dimethyl dichlorosilane is a repellent that is very convenient to use, as it need be only flowed in and out of the clean pipet, which is then allowed to dry.

SPECTROPHOTOMETER

The methods were designed for use with a Beckman model B spectrophotometer. Nevertheless, the methods can be adapted readily to other spectrophotometers. Only one phototube is used for the measurements, all of which are made in the range 420–640 mμ.

The stability of the instrument is maintained by use of a voltage regulator in the 115-volt a-c line. In place of a set of matched tubes, a single fixed absorption tube with a drain at the bottom was found generally to be more satisfactory.

The simple adapter, shown in figure 3 was built to hold the absorption cell in a fixed position in the cell compartment. Care must be

643874—62——2

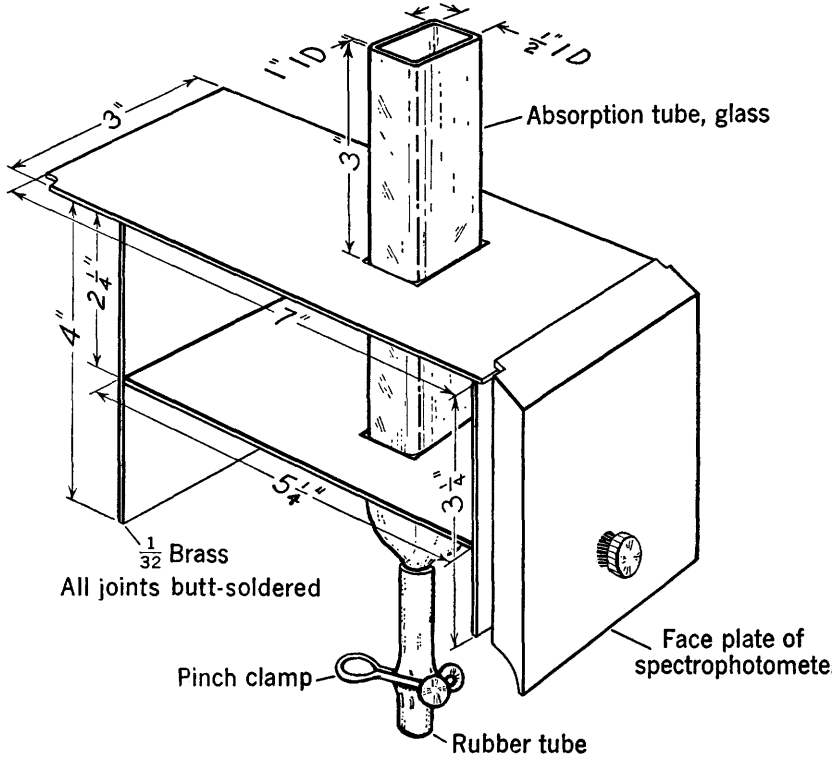

FIGURE 3.—Cell and cell adapter for the spectrophotometer.

taken to insure that the adapter and cell compartment are rigidly fixed in position in order to maintain a constant light path. The absorption cell should be treated with a water repellent to eliminate the necessity of rinsing between additions of solutions. The spectrophotometer must be raised on a platform approximately 5 inches to allow access to the absorption tube outlet.

The spectrophotometer is operated as follows: After the instrument has been allowed to warm up for about 20 minutes, pour at least 25 ml of the reference blank solution into the absorption cell, taking care to avoid the formation of bubbles on the cell walls. This can be done simply by using a water-repellent or plastic funnel with a short stem bent at an angle so that the tip touches the side of the absorption cell. Set the wave-length selector to the desired wave length, adjust the "dark-current" reading to zero, set the sensitivity switch to position 1, open the phototube shutter and adjust the meter to read 100-percent transmittance by varying the slit width. Close the shutter and allow the reference blank solution to drain from the absorption cell into a

discard container. Carefully pour at least 25 ml of sample solution into the absorption cell. Open the shutter and observe the meter reading. If the percent-transmittance reading is less than 31.5 percent, turn the sensitivity switch to a position which gives a reading greater than 31.5 and record the meter reading and sensitivity setting. Should the reading still be less than 31.5 percent after turning the sensitivity switch to position 4, the reading at position 4 is used. It has been found in practice that readings of the percent-transmittance scale, rather than of the absorbance scale, are less subject to reading error.

For those determinations in which the spectrophotometer is used, percent-transmittance readings are first converted to absorbance by interpolation of the values in table 1, which was derived by the use of the equation, A (absorbance) $=2-\log$ percent T (transmittance). All calculations are made with absorbance values because they have a linear rather than logarithmic relationship to concentration. This makes possible a simple calculation to determine the factor for each determination.

FLAME PHOTOMETER

The methods described for the determination of Na_2O and K_2O have been worked out specifically for the Perkin-Elmer Model 52C flame photometer. Other types of flame photometers can be substituted for this instrument if the procedures are adapted to the characteristics of a particular instrument.

When the Model 52C flame photometer is used it is set up as suggested in the instruction manual, except that the special glass atomizer shown in figure 4, is substituted for the atomizer furnished by the manufacturer.

The capillary-aspirator type of atomizer shown has certain advantages over the funnel-type of atomizer when used in the determination of Na_2O and K_2O in rocks. It atomizes solution into the flame at the relatively slow fixed rate of approximately 4 ml per minute so that about 15 ml of each sample and standard solution is consumed for each complete determination. This atomizer draws solution up through the capillary intake tube from a small beaker. When the beaker is withdrawn, the capillary tube empties in a moment. The outside of the tube can then be wiped clean with a piece of lintless tissue, another solution can be passed in, and almost immediately the capillary is flushed clean of the previous solution. There is no waiting for solutions to clear, and the deliberate rinsing and flushing needed in using the funnel type of atomizer is eliminated.

To start the operation of the flame photometer for the determination of Na_2O and K_2O, first turn on the electric switch on the panel

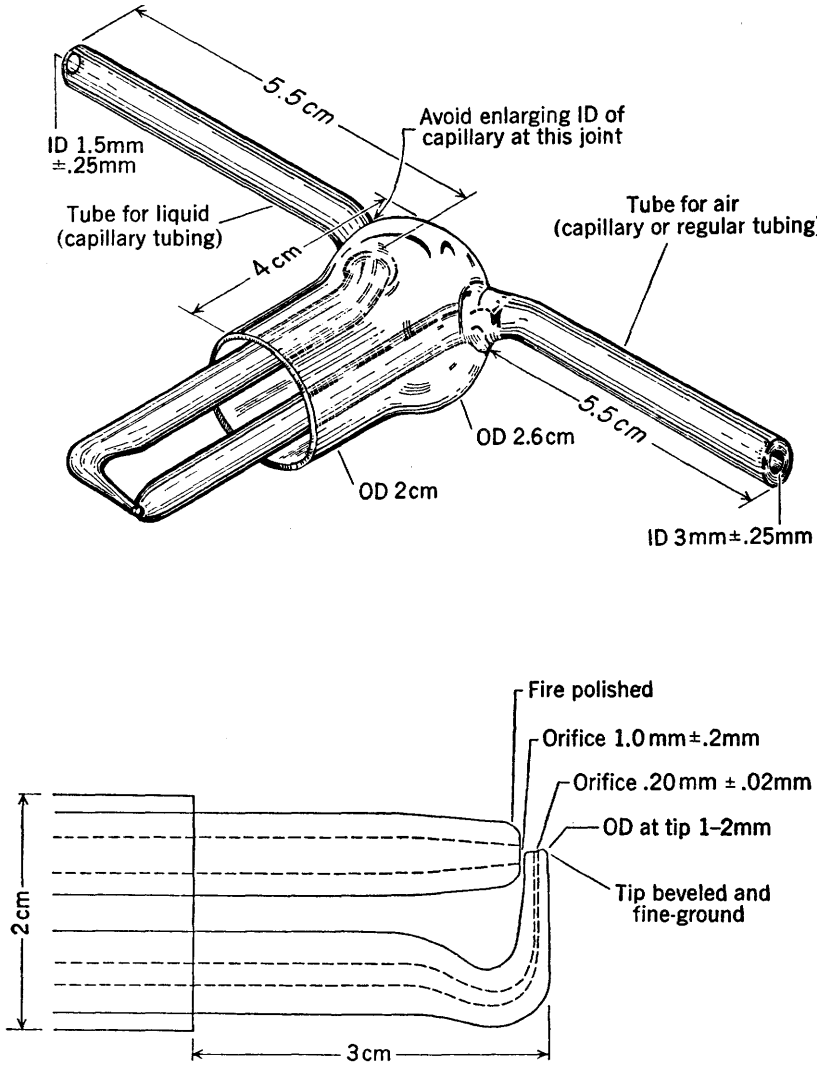

FIGURE 4.—Special glass atomizer for the flame photometer.

of the instrument. Then adjust the air pressure to 10 pounds per square inch, open the gas valve (natural gas or propane) and adjust so that the flame consists of small sharply defined bright-blue inner cones, that do not jump irregularly from the burner grid. The burner chimney should be shifted until the flame is centered in it. The instrument should then be allowed to warm up for about 30 minutes to achieve thermal equilibrium before readings are taken.

TABLE 1.—*Conversion of percent transmission* (T) *to absorbance* (A)

T	*A*	*T*	*A*	*T*	*A*	*T*	*A*
30.0	0.523	50.0	0.301	70.0	0.155	90.0	0.046
30.5	.516	50.5	.297	70.5	.152	90.5	.043
31.0	.509	51.0	.292	71.0	.149	91.0	.041
31.5	.502	51.5	.288	71.5	.146	91.5	.039
32.0	.495	52.0	.284	72.0	.143	92.0	.036
32.5	.488	52.5	.280	72.5	.140	92.5	.034
33.0	.482	53.0	.276	73.0	.137	93.0	.032
33.5	.475	53.5	.272	73.5	.134	93.5	.029
34.0	.469	54.0	.268	74.0	.131	94.0	.027
34.5	.462	54.4	.264	74.5	.128	94.5	.025
35.0	.456	55.0	.260	75.0	.125	95.0	.022
35.5	.450	55.5	.256	75.5	.122	95.5	.020
36.0	.444	56.0	.252	76.0	.119	96.0	.018
36.5	.438	56.5	.248	76.5	.116	96.5	.016
37.0	.432	57.0	.244	77.0	.114	97.0	.013
37.5	.426	57.5	.240	77.5	.111	97.5	.011
38.0	.420	58.0	.237	78.0	.108	98.0	.009
38.5	.415	58.5	.233	78.5	.105	98.5	.007
39.0	.409	59.0	.229	79.0	.102	99.0	.004
39.5	.403	59.5	.226	79.5	.100	99.5	.002
40.0	.398	60.0	.222	80.0	.097		
40.5	.393	60.5	.218	80.5	.094		
41.0	.387	61.0	.215	81.0	.092		
41.5	.382	61.5	.211	81.5	.089		
42.0	.377	62.0	.208	82.0	.086		
42.5	.372	62.5	.204	82.5	.084		
43.0	.367	63.0	.201	83.0	.081		
43.5	.362	63.5	.197	83.5	.078		
44.0	.357	64.0	.194	84.0	.076		
44.5	.352	64.5	.190	84.5	.073		
45.0	.347	65.0	.187	85.0	.071		
45.5	.342	65.5	.184	85.5	.068		
46.0	.337	66.0	.180	86.0	.066		
46.5	.333	66.5	.177	86.5	.063		
47.0	.328	67.0	.174	87.0	.060		
47.5	.323	67.5	.171	87.5	.058		
48.0	.319	68.0	.168	88.0	.056		
48.5	.314	68.5	.164	88.5	.053		
49.0	.310	69.0	.161	89.0	.051		
49.5	.305	69.5	.158	89.5	.049		

AUTOMATIC TITRATION APPARATUS

Visual titrations with EDTA (disodium ethylenediamine tetraacetate) have been successfully used by many analysts, nevertheless some analysts have had difficulty in discerning titration end points in the titration of calcium and magnesium. These difficulties have been overcome by the use of an automatic photometric titration apparatus (Barredo and Taylor, 1947) shown in figure 5. With this apparatus, a solution of EDTA is delivered at a constant rate into the magnetically stirred solution containing the calcium or magnesium, appropriate reagents, and a spike of these constituents to assure a definite response. A beaker within the photometer serves as the titration cell. As the titration proceeds, the recorder plots the change in absorption on a chart. The end point is taken as the position on the chart at which change in absorption ceases. By comparing the chart length required for the titration of a solution containing a known amount of calcium or magnesium with the chart length required for a sample solution, the calcium or magnesium content can be calculated.

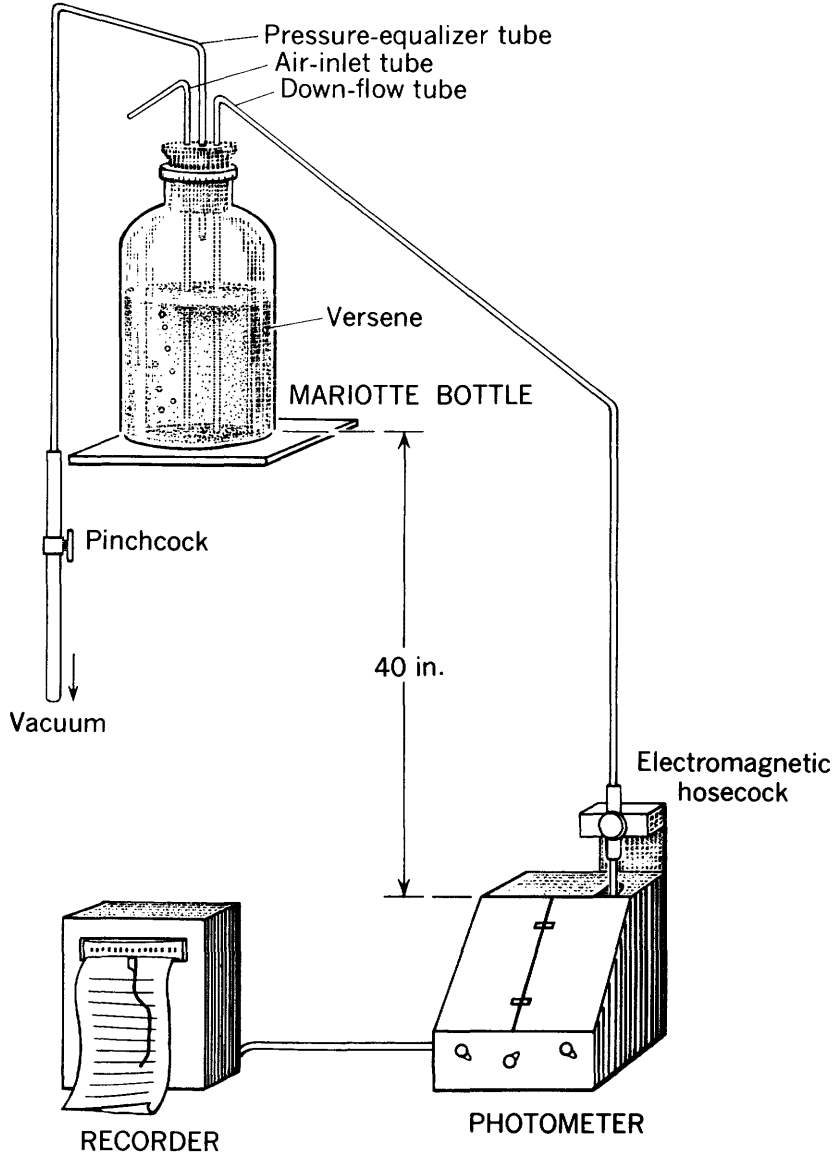

FIGURE 5.—Titration assembly.

A Mariotte bottle provides a simple means for delivery of EDTA solution to a titration beaker at a constant flow rate. A 20-liter bottle is mounted about 4 feet above the workbench. It is fitted with a rubber stopper through which pass three glass tubes. The air inlet tube extends nearly to the bottom of the bottle. The pressure equal-

izer tube starts in the air space above the liquid, goes through the stopper, and is connected to a vacuum line. Somewhere along this tube is placed a rubber section with a pinchcock so that suction can be applied or shut off conveniently. The downflow tube starts close to the bottom of the bottle, passes through the stopper, and down to the electromagnetic hosecock, which is part of the titrator. A few inches below the electromagnetic hosecock extends a capillary tube with a tip so constricted that the flow rate is maintained at about 20 ml per minute.

By this arrangement, when the liquid is flowing through the downflow tube, and the pressure equalizer tube pinchcock is closed, the hydrostatic head is from the bottom of the air inlet tube (almost the bottom of the bottle) to the top of the liquid in the beaker which is in the titrator. A constant head will be maintained as the liquid in the bottle is used up, so long as the air pressure within the bottle is such that, as liquid is flowing out, air is entering through the air inlet and bubbling through the EDTA solution. If the temperature in the room changes from day to day, it may be necessary to reduce the air pressure above the liquid before the titrator is used. Suction is applied until air starts to bubble through the EDTA solution and then it is turned off. The rubber stopper must, of course, provide an airtight seal to maintain the slight difference in pressure.

A recorder which provides full-scale deflection for 1 milliampere is used. It should have an internal resistance not exceeding 2,000 ohms. The chart drive should be geared to feed at about 12 inches per minute at a constant rate.

The titration assembly is shown in figure 5, and the photometer, with the front panel removed, is shown in figure 6. There are four simple circuits (fig. 7): the stirrer circuit (*A*), the titrate circuit (*B*), the light circuit (*C*), and the photocell circuit (*D*). The stirrer circuit consists merely of a magnetic stirrer with an on-off switch connected directly to the line current. The titrate circuit is a double-throw single-pole switch that is connected in such a way that line current can go either to the electromagnetic hosecock or to the chart drive of the recorder. By this means, coordination is achieved between the opening of the hosecock, which starts the flow of the EDTA solution, and the start of movement of the chart. The light circuit is fed from the line, through a voltage stabilizer, to the primary of a 6- to 8-volt transformer. The secondary of the transformer is in series with a 50-candlepower automobile light bulb and a 50-watt 5-ohm rheostat.

The photocell circuit is a series circuit consisting of a barrier-layer selenium photocell, a 1½-volt dry-cell battery, and the galvanometer of the recorder. In this application, advantage is taken of the decrease

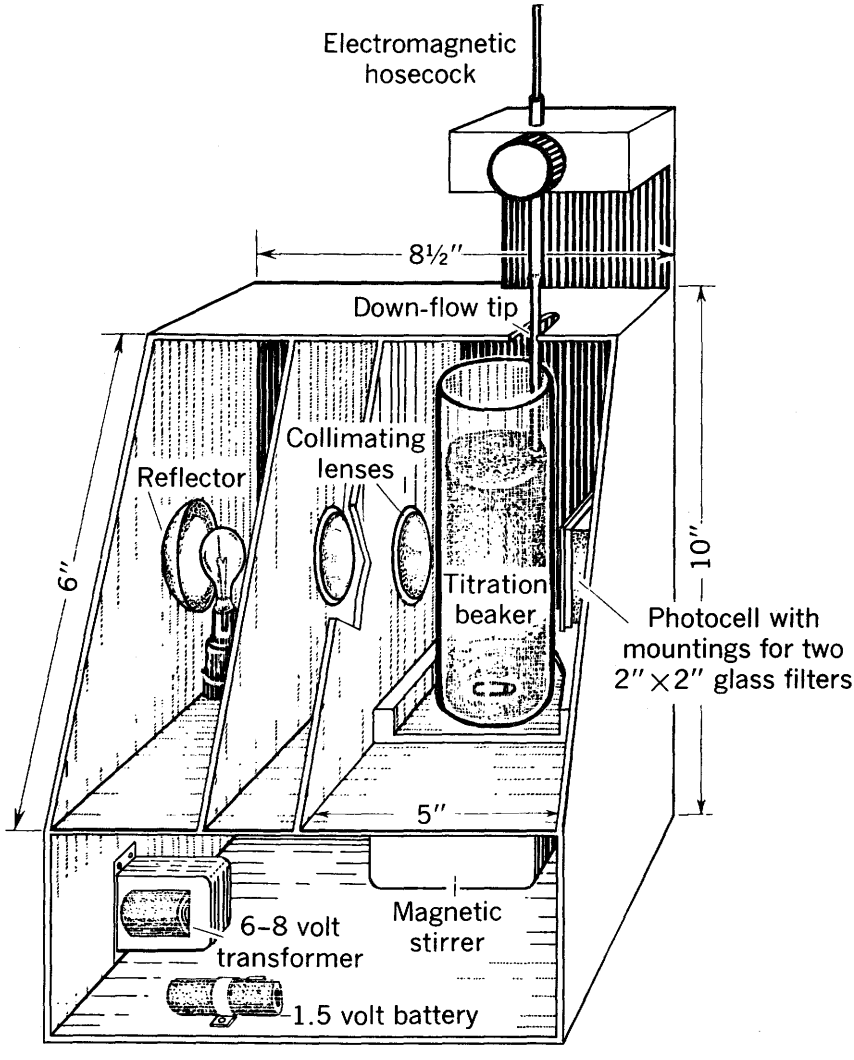

FIGURE 6.—Photometer, front removed.

in resistance of the photocell as the light intensity is increased, rather than the output of the photocell itself. The polarity of the units must be correct, as shown in the diagram, or the circuit will not function. A few minutes of experimenting at this point will yield the proper arrangement. A carrier for two 2- by 2-inch filters is mounted in front of the photocell. An orange filter (Corning 3480) is used when CaO+MgO is titrated, and this plus a green filter (Corning 4015) are used while titrating CaO.

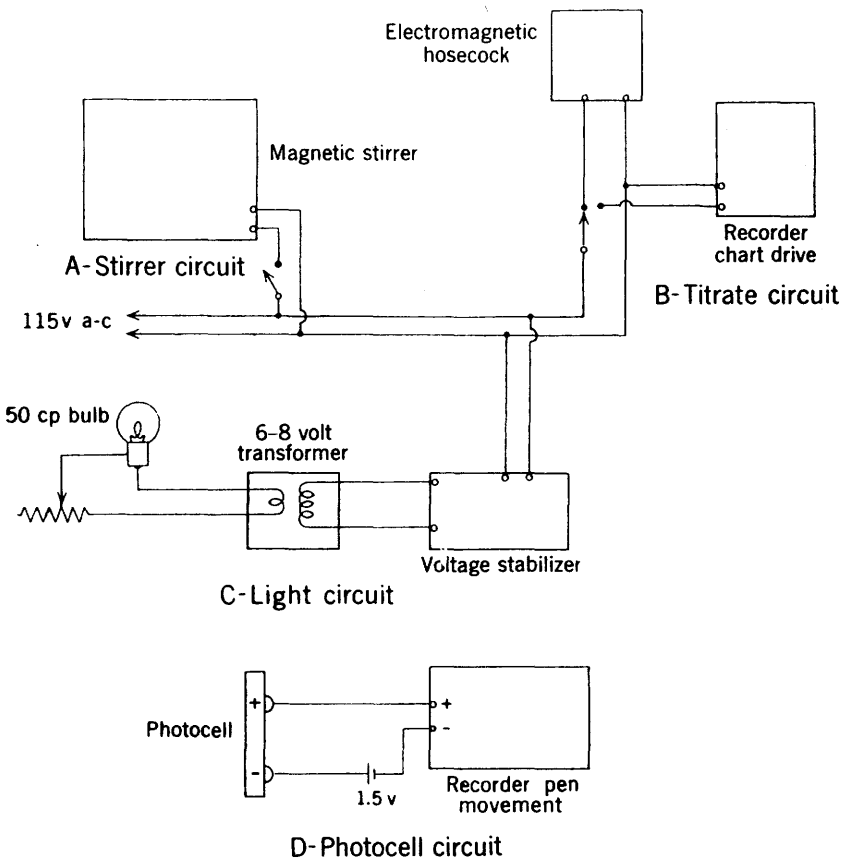

FIGURE 7.—Circuitry of titrator.

It is desirable to have at least several dozen 400 ml tall-form beakers, with lines marked off about 3 inches from the bottom of the beaker, so that the same hydrostatic head is maintained from the bottom of the air inlet tube to the surface of the liquid, from beaker to beaker.

The photometer described above can be replaced by the spectrophotometer used in the rest of the work.

The spectrophotometer can be adapted by adding an interchangeable unit to carry the titration vessel and the magnetic stirrer, by removal of the plate below the cell compartment of the spectrophotometer. The recorder described above can be connected to pins 11 and 13 at the rear of the instrument. The wavelength is set to 590 mμ when CaO is titrated, and 650 mμ when CaO+MgO is titrated.

643874—62——3

CARBONATE TUBE

The carbonate tube used for determination of small amounts of CO_2 is a simple device designed to measure volumetrically the CO_2 evolved from a sample upon treatment with acid. It consists of an 18-mm by 150-mm test tube with a side arm attached as shown in figure 8.

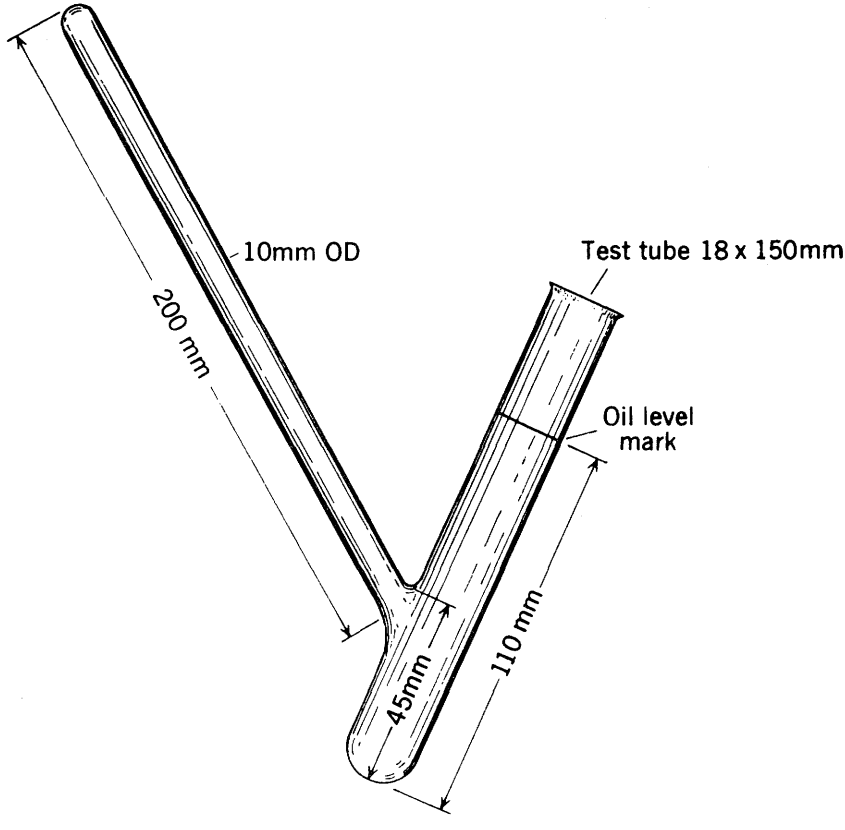

FIGURE 8.—Carbonate tube.

EVOLUTION-ABSORPTION APPARATUS FOR CO_2

The apparatus (fig. 9) for the determination of large amounts of CO_2 is a modification of that of Goldich, Ingamells, and Thaemlitz (1959). It consists of a decomposition flask of 50-ml capacity, through which a funnel and small condenser are inserted. The condenser is connected to a water-jacketed gas-measuring buret. The three-way stopcock on the buret may be opened either to the decomposition flask

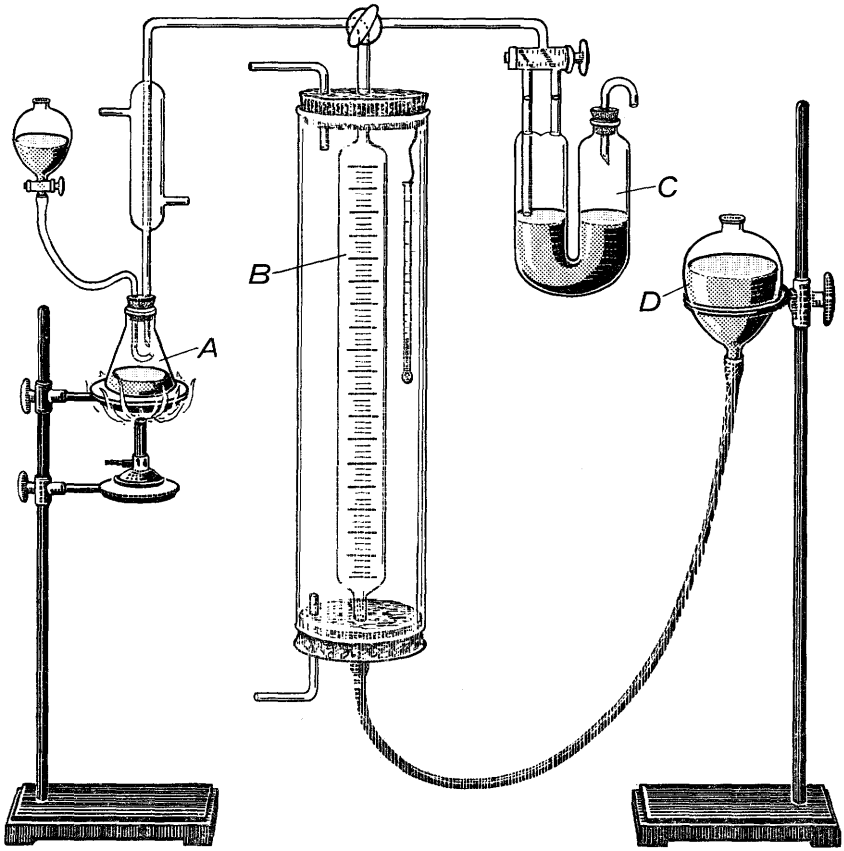

FIGURE 9.—Evolution-absorption apparatus for CO_2. *A*, Decomposition flask; *B*, gas buret; *C*, absorption pipet; *D*, leveling bulb.

or to an absorption pipet containing 40 percent potassium hydroxide. A saturated solution of NaCl in 1+3 HCl, with a few milligrams of methyl red indicator added, is used for decomposing the sample and for filling the gas buret and leveling bulb. The absorption pipet has a two-way stopcock to permit the CO_2 to bubble through the KOH and also to allow a precise setting of the level of the KOH.

STOPCOCK PIPET DEVICE

The reproducibility of 8-ml pipets has been found in actual practice to be within 0.5 percent of the volume. If the concentration of the constituent to be determined is high, for example, SiO_2 in silicate rocks, greater reproducibility is desirable. With the stopcock-pipet device illustrated in figure 10, sample portions can be taken with a precision of about 0.1 percent.

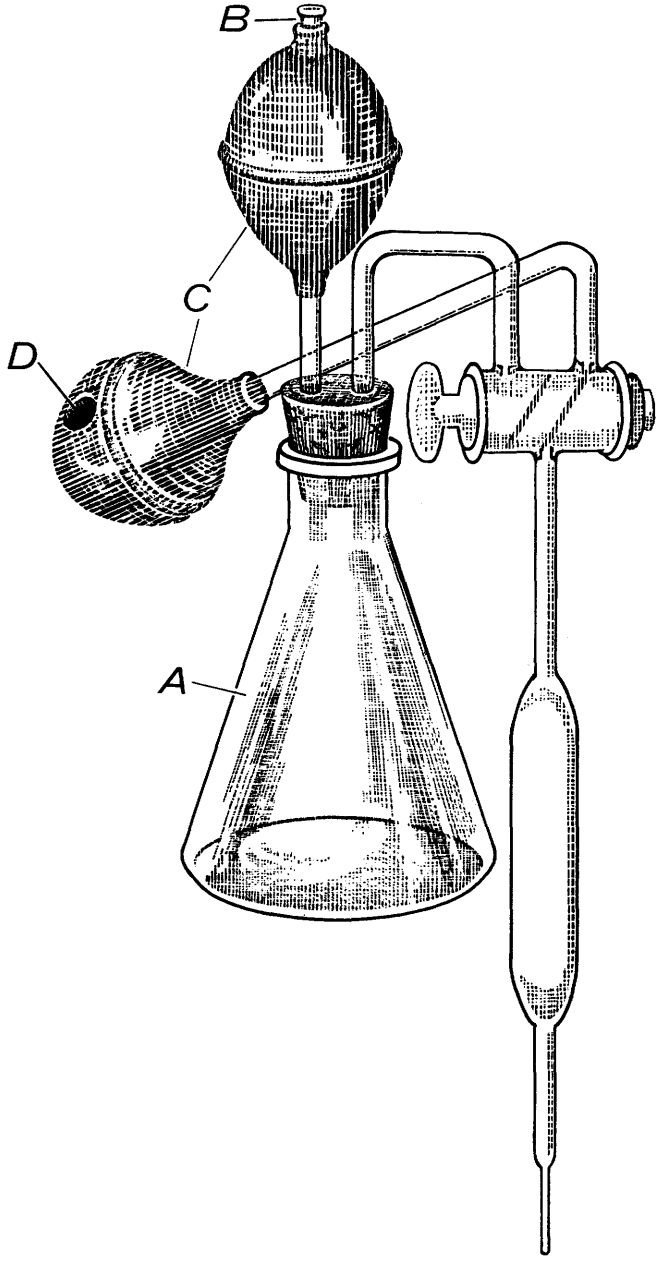

FIGURE 10.—Stopcock pipet device. *A*, overflow flask; *B*, exhaust valve; *C*, squeeze bulbs; *D*, air-inlet hole.

The device consists of a two-way stopcock fused to a water-repellent coated 8-ml pipet in such a way that the volume of liquid delivered by the pipet, after it has been filled to the stopcock, is nearly 8 ml. At the alternate position of the stopcock, on the side opposite to the pipet, on one arm, there is a 150-ml flask fitted with a squeeze bulb and valve to provide for overflow and suction. Another squeeze bulb, with a small hole or a valve in it, is attached to the other arm.

The stopcock-pipet device is used in the following manner: With the stopcock in a position so that all openings are closed, squeeze the bulb attached to the overflow flask, forcing air from the exhaust valve. Insert the pipet into the liquid to be pipetted and rotate the stopcock so that the passage from the pipet to the overflow flask is open. The liquid rises to fill the pipet, and then overflows past the stopcock. When the liquid begins to pass the stopcock, rotate the stopcock a half turn, stopping the movement of liquid. Wipe the tip of the pipet with a tissue and place over the receiving vessel. Rotate the stopcock to allow air to enter through the hole or valve in the bulb on the other arm of the stopcock and allow the liquid to drain from the pipet. When the flow has stopped, place a finger over the hole in the bulb (if it has a hole) and squeeze, forcing out the drop of liquid remaining in the tip. Repeat the process for the next solution.

The pipet is self-rinsing in that it is coated with a water repellent, and the overflow carries the slight residual liquid over into the overflow flask.

MULTIPLE PIPETTING DEVICE

The multiple pipetting device (Shapiro and Brannock, 1959), though optional in the methods described, provides several advantages. By enabling 30 samples to be pipetted in a few minutes it reduces fatigue, saves time, and minimizes the chance of error by the interchanging of adjoining containers. It is designed to be used for constituents that are usually less than 10 percent, such as MnO, CaO, MgO, Na_2O, K_2O, and P_2O_5 in silicate rocks. The volumes pipetted do not deviate from a mean value by more than 0.15 ml. For constituents that are more than 10 percent a conventional pipet can be used to provide greater accuracy.

The pipetting device, as illustrated in figure 11, consists of an array of 30 pipets with glass rods inserted into the top of the stem of each pipet down to a point just below the calibration mark as shown in figure 12. Each pipet is connected to the manifold.

To construct the apparatus, select thirty 25-ml pipets that do not differ in the distance from the tip to the calibration mark by more than 1 inch and that are about 5 mm in diameter at the top for the insertion of a Pyrex glass rod 4 mm in diameter. Insert such a rod

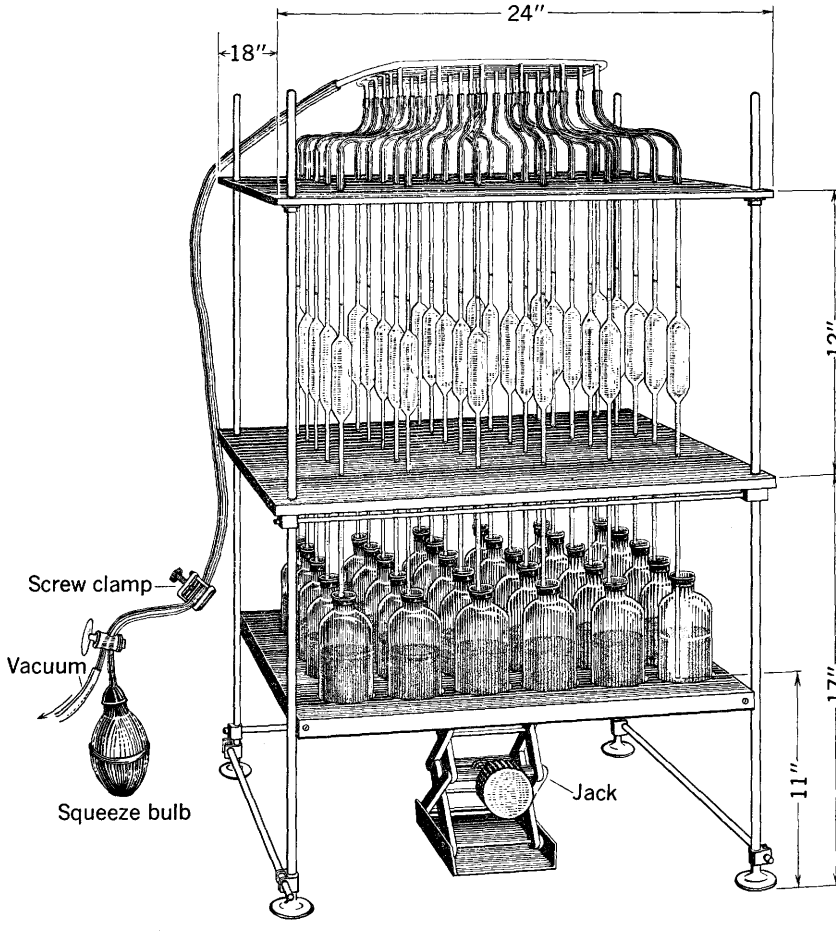

FIGURE 11.—Multiple pipetting device.

into the stem of each pipet to a point about one-eighth inch below the calibration mark. With the rod in place, soften the top inch of the stem over a gas burner and bend so that the rod will remain in a fixed position in the pipet, as illustrated. Clean and coat the inside of each pipet with a water repellant preparation. Mount the pipets as illustrated. The dimensions given are appropriate for use with sample solution bottles not greater than 3 inches in diameter. Position the pipets by moving the rubber tubing up or down on the top of the pipet so that all the tips are in a plane half an inch from the top of the laboratory jack when it is fully raised.

The device is used as follows: Position the sample bottles to be aliquoted on the lower tray. Grids or spacing overlays may be used to facilitate this positioning. Place the tray on the laboratory jack

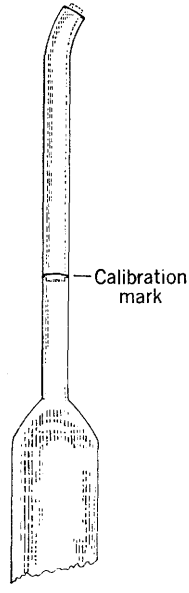

FIGURE 12.—Pipet prepared for multiple pipetting device.

and raise the jack so that the pipets are well submerged in the solutions. Tighten the screw clamp, turn on the source of vacuum, turn the stopcock so that the suction is applied to the manifold, and then open the screw clamp slowly. When liquid has risen almost to the calibration line of the pipet that is filling at the greatest rate, close the screw clamp for a few seconds until the liquid ceases to rise in the slower filling pipets. Repeat the opening and closing of the screw clamp at short intervals until the liquid in each pipet is above the lower end of the inserted rod. Do not allow the liquid to enter the rubber tubing above the pipet. Appreciable differences in the liquid level will cause only small differences in the volumes because the rod inserts reduce the free volumes above the calibration marks.

With the screw clamp closed, lower the laboratory jack. Remove the tray containing the sample solutions and replace it with another tray containing appropriate receiving vessels. Raise the jack to a height that will allow the pipets to drain without spattering. Rotate the two-way stopcock so that the squeeze bulb is connected to the manifold and open the screw clamp slightly thus allowing the liquids to drain slowly. When the liquids have drained past the ends of the glass rods, open the screw clamp fully. When drainage is complete,

squeeze the rubber bulb several times to blow out the small amounts of liquid remaining, lower the jack and remove the tray.

PIPETTING MACHINE

Commercial pipetting machines, consisting of motor-driven syringes with intake and outlet valves, are available and can be used with the methods described. Unlike the multiple pipetting device, the commercial machines are used to dispense a single liquid into many different containers rapidly. Aliquots of a reagent can be dispensed easily into 30 containers in one minute. It can be used for all reagents except those that are strongly acid.

When a pipetting machine is used, several additional advantages accrue. It is advisable to dilute the reagents to be added in such a way that the same volume may be dispensed, eliminating resetting the machine. The dilutions and volumes may be arranged so that the final volumes are such that no further dilutions need be made. Precision of dispensing a given aliquot is high, so that where all reagents are added to a pipetted aliquot of sample, volumetric flasks may be dispensed with. Furthermore, the force of addition of the reagent is sufficient to produce a degree of stirring such that no further mixing is required. Two examples of the use of this machine in the procedures described will be cited.

In the determination of SiO_2, the three reagents required are diluted so that 25 ml of each are used. Transfer 8-ml aliquots of the A solutions to dry 400-ml tall-form beakers using a stopcock pipet. With the pipetting machine add 25 ml of water, then 25 ml of each of the diluted reagents. No further handling is required until the transmittances are measured. The total volume of 108 ml is the same for standards and samples.

In the determination of Al_2O_3, the hydroxylamine hydrochloride solution, the calcium chloride solution, and the potassium ferricyanide are premixed and diluted just before use so that 25 ml of the mixture is required. The remaining three solutions are also diluted so that 25 ml of each is required. Transfer 15 ml of the A solutions to 400-ml tall-form beakers and add 25 ml of the reagents with suitable timing between additions. No further handling is required until the transmittances are measured. The total volume of about 115 ml will be precisely the same for all the solutions.

Our experience has shown that the reproducibility of SiO_2 and Al_2O_3 determinations, done in this manner with the pipetting machine, is superior to that of determinations done with manual additions.

METHODS

PREPARATION OF POWDERED SAMPLES

A jaw crusher, a roll crusher, and a mortar grinder (with a mullite mortar), all electrically powered, are used to reduce the samples to a powder that will pass a 100-mesh sieve.

PROCEDURE

1. If any of the pieces of the samples are too large for crushing with the jaw crusher, break them with a hardened hammer to a size suitable for the crusher.
2. Adjust the jaw crusher so that it will crush the samples to an average dimension of about one-half inch.
3. Clean the crusher thoroughly and pass all of the first of the series of samples through it.
4. Repeat step 3 for each of the samples.
5. Set the rolls of the roll crusher about one-eighth inch apart and pass the first sample through it.
6. Set the rolls of the roll crusher so that they are touching, and again pass the same sample through the crusher.
7. Repeat steps 5 and 6 with each sample, cleaning the crusher between each sample.
8. Mix thoroughly and split out about 75 g. of each sample by quartering.
9. Take the first of the series of samples and separate the coarse material from the fines with a 100-mesh sieve of 8-inch diameter.
10. Place a convenient amount of the material retained on the sieve into the mortar of the mortar grinder and set the timer control so that the grinder will operate for 5 minutes.
11. Separate the coarse material from the fines with the 100-mesh screen.
12. Repeat steps 10 and 11 until all the sample passes through the 100-mesh screen.
13. Mix thoroughly and transfer to a 2-ounce screw-cap jar.
14. Repeat steps 9 through 13 for the remainder of the samples.

PREPARATION OF SOLUTION A

Solution A is used in the determinations of SiO_2 and Al_2O_3. Portions of the samples and standards are decomposed by fusion at a comparatively low temperature with NaOH for about 5 minutes in nickel crucibles. After cooling, the melts are leached with water and the solutions are acidified with hydrochloric acid.

Occasionally, with some fine-grained materials such as clays, there is a tendency during fusion for some of the sample powder to float on the surface of the molten NaOH and remain unattacked. When this occurs, the crucible is swirled, allowed to cool, and then reheated so that complete decomposition will result.

For silicate rocks, 50-mg portions of samples and standard are used. This relatively small portion is taken to avoid the necessity for double dilutions, which would be required with larger portions.

643874—62——4

The concentration range of SiO_2 in silicate rocks (about 40 to 100 percent) is such that the accuracy and precision sought in this determination are several times greater than are necessary for the other constituents. For this reason, particular care should be given to mixing and weighing of the samples, to the fusions, and to the handling of the relatively concentrated solutions of the melts before dilution.

For carbonate or phosphate rocks, a 200-mg portion of sample powder is used.

REAGENTS

NaOH solution, 30 percent: Dissolve 1 pound of NaOH pellets in 1,500 ml of water in a stainless steel beaker. Cool and store in a plastic bottle.

HCl, 1+1: Prepare 1 liter.

National Bureau of Standards standard sample No. 99 (feldspar).

PROCEDURE

1. Transfer 5-ml portions of 30 percent NaOH solution, measured with a plastic graduate, to a series of 75-ml nickel crucibles. One crucible will be needed for each sample, two for standards, and one for a blank. Each crucible should be cleaned with dilute HCl before use.
2. Evaporate the solutions to dryness over gas burners or electric heaters. A slight amount of spattering can be ignored.
3. Accurately weigh (to the nearest 0.1 mg) approximately 50 mg of each sample of silicate-rock powder (200 mg for carbonate and phosphate rocks) and two 50-mg portions of National Bureau of Standards standard sample No. 99 (feldspar). As each portion is weighed, transfer to a crucible containing the NaOH.
4. Cover and heat the crucibles to dull redness for about 5 minutes. Remove each crucible from the heat and swirl the melt around the sides. Allow the melts to cool.
5. Add about 50 ml of water to each crucible, cover, and allow to stand overnight, or until the melts disintegrate completely. (About 1 hour is required if the solutions are stirred occasionally.)
6. Transfer the contents of each crucible to a 1-liter volumetric flask (previously rinsed with 1+1 HCl) containing about 400 ml of water and 20 ml of 1+1 HCl. A plastic funnel with a stem at least 6 inches long should be used, so that the alkaline solutions will not contact the flasks but drain directly into the dilute acid solutions. Police and wash each crucible to assure complete transfer of the solutions and precipitates.
7. Dilute each solution to the mark and mix well. If the solutions are not to be used the same day they should be transferred to tightly stoppered plastic bottles for storage.

PREPARATION OF SOLUTION B

Solution B is used in the determination of total iron, MgO, CaO, TiO_2, P_2O_5, MnO, Na_2O, and K_2O.

The samples are digested on a steambath overnight with a mixture of HF, H_2SO_4, and HNO_3. This decomposes almost all the minerals that are normally present.

Organic matter is destroyed by the addition of a few drops of a mixture of perchloric and nitric acids prior to heating to sulfuric acid fumes. Any manganese dioxide formed by oxidation is then reduced and rendered soluble by the addition of hydrazine sulfate.

Occasionally appreciable residues remain. They should be removed, identified, and analyzed by suitable methods.

REAGENTS

Solution B acid mixture: Working under a fume hood, transfer the contents of a 1-pound bottle of HF (48 percent) to a 1-liter polyethylene bottle. Chill the HF in a bath of cold water. Keep the polyethylene bottle in the cold water bath, add 165 ml of concentrated H_2SO_4, mix, and allow to cool. Add 40 ml of concentrated HNO_3 and mix.

$HClO_4$–HNO_3 mixture: Mix 100 ml of $HClO_4$ (72 percent) and 100 ml of concentrated HNO_3.

Hydrazine sulfate solution, 0.2 percent: Prepare 100 ml of fresh solution for each run.

PROCEDURE

1. Transfer 0.500 g of each sample to special Teflon beakers (see Apparatus and instruments, p. A4).
2. Under a fume hood, add 15 ml of the solution B acid mixture to each Teflon beaker and swirl to wet the sample powder.
3. Cover the Teflon beakers with the Teflon covers, place the beakers on the steambath so that most of each beaker is suspended in steam and allow to heat overnight.
4. Remove the covers and continue to heat the beakers on the steambath for about 1 hour or until acid fumes are no longer given off.
5. Completely transfer the contents of the Teflon beakers to 400-ml Vycor beakers, using a minimum of water and a policeman to effect the transfer.
6. Place the Vycor beakers on a hot plate and heat until fumes of SO_3 start to evolve, then remove them.
7. When SO_3 fumes have stopped coming off, add about 4 drops of the $HClO_4$-HNO_3 mixture from a dropping bottle into each beaker and replace the beakers on the hot plate. Allow each beaker to heat until strong fumes evolve and any color due to organic matter has disappeared.
8. Remove the beakers from the hot plate, allow them to cool for a few minutes, then add about 225 ml of water, 5ml of concentrated HNO_3, and 1 ml of the hydrazine sulfate solution.
9. Replace the beakers on the hot plate, and heat to boiling. If a brown precipitate of MnO_2 remains after the solutions have boiled for a few minutes, an additional milliliter of hydrazine sulfate should be added. If a residue remains after the solutions have been boiled for a few minutes, boiling should be continued for an additional half hour. A small amount of residue can be ignored. An appreciable amount of residue should be separated, identified, and analyzed by suitable means.
10. Cool the solutions to room temperature, then transfer to 250-ml volumetric flasks.
11. Dilute to volume, mix, and transfer to polyethylene bottles.

DETERMINATION OF CONSTITUENTS

SiO_2 IN SILICATE ROCKS

In the determination of SiO_2, a molybdenum blue method (Bunting, 1944) is used.

As in the preparation of solution A, factors that govern precision should be given particular attention in order to avoid errors, which might seriously affect the accuracy of the final results. All the aliquots of the A solution should be precisely measured with the same 8-ml pipet. Adequately precise measurements can be made with an ordinary transfer pipet, but better precision is assured if a stopcock pipet is used (p. A15). The 100-ml volumetric flasks that are used in the color development should meet the tolerances prescribed by the National Bureau of Standards.

REAGENTS

Ammonium molybdate solution: Dissolve 7.5 g of $(NH_4)_6Mo_7O_{24}\cdot 4H_2O$ in 75 ml of water, add 25 ml of 1+4 H_2SO_4, and mix. Store in a plastic bottle.

Tartaric acid solution, 10 percent: Prepare 500 ml and store in a plastic bottle. Prepare a fresh solution when sediment forms.

Reducing solution: Dissolve 0.7 g of sodium sulfite in 10 ml of water. Add 0.15 g of 1-amino-2-naphthol-4-sulfonic acid and stir until dissolved. Dissolve 9 g of sodium bisulfite in 90 ml of water, add this solution to the first solution and mix. *Do not store this solution for more than 3 days.*

PROCEDURE

1. Transfer 8 ml of the solution A reagent blank solution, 8 ml of each standard solution, and 8 ml of each sample solution to 100-ml volumetric flasks. Use an 8-ml transfer pipet or preferably an 8-ml stopcock pipet. Add approximately 50 ml of water to each flask.
2. Add 2 ml of the ammonium molybdate solution with a pipet, swirling the flasks during the additions. Allow to stand for 10 minutes.
3. Add 4 ml of the tartaric acid solution with a pipet, swirling the flasks while adding.
4. Add 1 ml of the reducing solution with a pipet while swirling the flasks.
5. Dilute to volume, mix well, and allow to stand for at least 30 minutes.
6. Determine the percent transmission for each solution at 640 mμ, using the reagent blank solution as the reference.

CALCULATIONS

1. Convert the readings for percent transmission to absorbance using table 1.
2. Compute the factor:

$$\frac{(\text{Percent } SiO_2 \text{ in the standard}) \times (\text{average of weights of standards})}{\text{Average of absorbance of standards}} = \text{factor}$$

3. Compute the percent SiO_2 in the samples:

$$\frac{(\text{Factor}) \times (\text{absorbance of the sample})}{\text{Weight of sample}} = \text{percent } SiO_2$$

SiO_2 IN CARBONATE AND PHOSPHATE ROCKS

The determination of SiO_2 in carbonate rocks is made in the same way as for silicate rocks. The same reagents and the same procedure are used. However, the calculations have been changed, as shown below, to reflect the 200-mg sample size used in the preparation of the A solutions of the samples, the weight of the standard remaining 50 mg.

CALCULATIONS

1. Convert the readings for percent transmission to absorbance using table 1.
2. Compute the factor:

$$\frac{(\text{Percent } SiO_2 \text{ in the standard}) \times (50/\text{average of weights of standards, in mg})}{\text{Average of the absorbances of the standard solutions}} = \text{factor}$$

3. Compute the percent SiO_2 in the samples:

$$(\text{Factor}) \times (\text{absorbance of sample}) = \text{percent } SiO_2$$

The determination of SiO_2 in phosphate rocks is made in the same way as for carbonate rocks.

Al_2O_3 IN SILICATE ROCKS

Alumina (Al_2O_3) is determined by measuring the absorption of light at 475 mμ of a solution in which aluminum has been converted to a calcium aluminum alizarin red-S complex (Parker and Goddard, 1950).

When 50-mg samples are used for the preparation of the A solutions and a 15-ml aliquot is used, Al_2O_3 can be determined on samples containing as much as 24 percent Al_2O_3. For samples containing from 24 percent to 36 percent Al_2O_3, a 10-ml aliquot of solution A should be used instead of the usual 15 ml. When a 10-ml aliquot is used, 5 ml of blank solution should also be added to the flask in order to maintain the same pH and concentration of inert salts as in the standard solutions.

Appreciable quantities of iron and titanium also form colored complexes which absorb at 475 mμ.

Interference from iron is eliminated by the use of potassium ferricyanide and thioglycolic acid as complexing agents. Both these reagents are required to eliminate completely this interference.

An empirically derived table is provided to correct for the effect of titanium.

REAGENTS

Hydroxylamine hydrochloride solution, 10 percent: Prepare 500 ml.

Calcium chloride solution: Transfer 7 g of $CaCO_3$ to a 250-ml beaker, add about 100 ml of water and 15 ml of concentrated HCl, heat to boiling, and boil for a few minutes. Cool to room temperature and dilute to 500 ml.

Potassium ferricyanide solution, 0.75 percent: Prepare 100 ml of solution just before using. Do not store.

Buffer solution: Dissolve 100 g of sodium acetate ($NaC_2H_3O_2 \cdot 3H_2O$) in water, add 30 ml of glacial acetic acid and dilute to 500 ml with water.

Alizarin red-S solution, 0.05 percent: Prepare 1 liter and filter.

Thioglycolic acid solution, 4 percent: Prepare 100 ml of solution on the day it is to be used.

PROCEDURE

1. Transfer 15 ml of the solution A reagent blank solution, 15 ml of each standard solution, and 15 ml of each sample solution to 100-ml volumetric flasks.
2. Add 2 ml of the calcium chloride solution to each flask.
3. Add 1 ml of the hydroxylamine hydrochloride solution to each flask and mix.
4. Add 1 ml of the potassium ferricyanide solution to each flask, and mix.
5. Add 2 ml of the thioglycolic acid solution, mix, and allow to stand for 5 minutes.
6. Add 10 ml of the buffer solution to each flask, using a graduate; mix and allow to stand for 10 minutes.
7. Add 10 ml of the alizarin red-S solution to each flask with a pipet, make to the mark, mix, and allow to stand for about 45 to 75 minutes.
8. Determine the percent transmission at 475 mμ for each solution using the blank solution as a reference.

CALCULATIONS

1. Convert the readings for percent transmission to absorbance using table 1.
2. Compute the factor:

$$\frac{(\text{Percent } Al_2O_3 \text{ in standard}) \times (\text{average weights of standards})}{\text{Average absorbance of standards}} = \text{factor}$$

3. Compute the apparent percent Al_2O_3 in the samples:

$$\text{Factor} \times \left(\frac{\text{absorbance of the sample}}{\text{weight of sample}}\right) = \text{apparent percent } Al_2O_3$$

4. Correct for TiO_2 according to the following:

Apparent percent Al_2O_3	*Correction per percent* TiO_2
0	0.25
5	.20
10	.15
15	.10
20	.05

$$(\text{Apparent percent } Al_2O_3) - (\text{Correction per percent } TiO_2) \times (\text{percent } TiO_2) = \text{percent } Al_2O_3$$

Al_2O_3 IN CARBONATE ROCKS

The determination of Al_2O_3 in carbonate rocks is made in the same way as for silicate rocks except that the calculations have been changed to correspond with the change from 50 mg to 200 mg in the A solutions of the samples.

CALCULATIONS

1. Convert the readings for percent transmission to absorbance using table 1.
2. Compute the factor:

$$\frac{(\text{Percent } Al_2O_3 \text{ in standard}) \times (50/\text{average of weights of standards, in mg})}{(\text{Average of absorbances of standard solutions}) \times 4} = \text{factor}$$

3. Compute percent Al_2O_3 in the samples:

$$(\text{Factor}) \times (\text{absorbance of the sample}) = \text{apparent percent } Al_2O_3$$

4. Correct for TiO_2 according to the following:

Apparent percent Al_2O_3	*Correction per percent* TiO_2
0	0.25
1.25	.20
2.50	.15
3.75	.10
5.00	.05

$$(\text{Apparent percent } Al_2O_3) - (\text{Correction per percent } TiO_2) \times (\text{percent } TiO_2) = \text{percent } Al_2O_3$$

Al_2O_3 IN PHOSPHATE ROCKS

Phosphate rocks normally contain fluorine, which tends to lower the alumina values when the concentrations of both of the constituents are about 1 percent or higher. This interference is eliminated by volatilization of the fluorine as silicon fluoride from the aliquots of solution A by evaporation from Vycor or silica vessels.

Reagents are the same as for silicate rocks.

PROCEDURE

1. Transfer 15 ml of solution A reagent blank solution, 15 ml of each standard solution, and 15 ml of each sample solution to a series of small Vycor beakers or evaporating dishes.
2. Evaporate to dryness on a steam bath.
3. To each beaker or dish add 15 ml of solution A reagent blank solution and heat for a few minutes on the steam bath to dissolve the salts, then remove from the steam bath and allow to come to room temperature.
4. Transfer the contents of the beakers or dishes to a series of 100-ml volumetric flasks, rinsing contents with a small amount of water from a wash bottle.
5. Add 2 ml of the calcium chloride solution to each flask.
6. Add 1 ml of the hydroxylamine hydrochloride solution to each flask and mix.
7. Add 1 ml of the potassium ferricyanide solution to each flask and mix.
8. Add 2 ml of thioglycolic acid, mix, and allow to stand for five minutes.
9. Add 10 ml of the buffer solution to each flask, mix, and allow to stand for 10 minutes.
10. Add 10 ml of the alizarin red-S solution to each flask with a pipet, dilute to the mark, mix, and allow to stand for about 1 hour.
11. Determine the percent transmission at 475 mμ for each solution using the blank solution as a reference.

Calculations are the same as for carbonate rocks.

TOTAL IRON IN SILICATE, CARBONATE, AND PHOSPHATE ROCKS

The method for the determination of total iron in silicate rocks is based on the orange color developed with orthophenanthroline after the iron is reduced with hydroxylamine hydrochloride and the solution is buffered with sodium citrate (Bandemer and Schaible, 1944). It was designed to accommodate samples containing from 0 to 15 percent total iron as Fe_2O_3, when 5 ml of solution B is used. For the occasional sample in which the iron exceeds 15 percent, a smaller amount of solution B can be used.

REAGENTS

Hydroxylamine hydrochloride, 10 percent: Prepare 500 ml.

Orthophenanthroline solution, 0.1 percent: Prepare 500 ml.

Sodium citrate solution, 10 percent: Prepare 500 ml.

Standard iron solution: Weigh 0.4910 g $FeSO_4 \cdot (NH_4)_2SO_4 \cdot 6H_2O$ and transfer to a 500-ml volumetric flask. Add 16 ml of 1+1 H_2SO_4, 10 ml of concentrated HNO_3, and about 300 ml of water. Stir until completely dissolved, then add water to the mark, and mix. The Fe_2O_3 concentration in this solution is 0.2 mg per ml, which is equivalent to that in a solution prepared from a sample containing 10.00 percent Fe_2O_3, as directed under "Preparation of solution B," page A22.

PROCEDURE

1. With a pipet, transfer two 5-ml portions of the standard iron solution and 5 ml of each sample solution B, to a series of 100-ml volumetric flasks. Use an additional flask for the preparation of a reagent blank solution.
2. With a graduate add 5 ml of the hydroxylamine hydrochloride solution to each flask, mix, and allow to stand for 10 minutes.
3. With a graduate add 20 ml of the orthophenanthroline solution to each flask and mix.
4. With a graduate add 10 ml of the sodium citrate to each flask, mix, and dilute to 100 ml with water.
5. After 1 hour determine the percent transmission at 555 mμ for each solution by using the reagent blank solution as the reference.

CALCULATIONS

1. Convert the readings for percent transmission to absorbance using table 1.
2. Compute the factor:

$$\frac{10}{\text{Average of the absorbances of the standard solutions}} = \text{factor}$$

3. Compute the percent total iron as Fe_2O_3:

$$(\text{Factor}) \times (\text{absorbance of sample solution}) = \text{percent total iron as } Fe_2O_3$$

NOTE.—Percent Fe_2O_3 in the sample is calculated in the usual way by subtracting the Fe_2O_3 equivalent of FeO (separately determined) from the value for total iron as Fe_2O_3:

$$(\text{Percent total iron as } Fe_2O_3) - (\text{percent FeO} \times 1.11) = \text{percent } Fe_2O_3$$

For total iron in carbonate and phosphate rocks use the same method as described above for silicate rocks.

TiO_2 IN SILICATE, CARBONATE, AND PHOSPHATE ROCKS

The determination of TiO_2 in silicate rocks is based on the yellow color produced with Tiron (disodium-1,2-dihydroxybenzene-3,5-disulfonate) (Yoe and Armstrong, 1947). Ferric iron also reacts with Tiron to produce a purple solution that can be decolorized by reduction with sodium dithionite.

Titanium dioxide in the range 0 to 3 percent can be determined with 5 ml of solution B. For higher concentrations, which are uncommon in rocks, a smaller amount of solution B should be taken.

REAGENTS

Tiron (disodium-1,2-dihydroxybenzene-3,5-disulfonate): Dry reagent powder.

Buffer solution: Dissolve 80 g of ammonium acetate and 30 ml of glacial acetic acid and make to 2 liters with distilled water.

Sodium dithionite, $Na_2S_2O_4$ (sometimes sold as sodium hydrosulfite): Dry reagent powder.

Standard TiO_2 solution: Weigh 0.1013 g of National Bureau of Standards standard sample No. 154 (titanium dioxide) or the appropriate amount of reagent TiO_2 of known composition. Transfer to a small platinum crucible. Add 2 g of sodium bisulfate, cover, and heat until the sample is completely fused, allow to cool and place the crucible into a beaker containing 125 ml of 1+1 H_2SO_4. Heat and stir until the melt is completely dissolved. Cool, dilute the solution to 250 ml in a volumetric flask and mix well. With a pipet, transfer 50 ml of the solution to a 1-liter volumetric flask, add 40 ml of 1+1 HNO_3, dilute to the mark, and mix. Store the solution in a Pyrex bottle. The concentration of TiO_2 is 0.02 mg per ml which is equivalent to that in a solution prepared from a sample containing 1.00 percent TiO_2, as directed under "Preparation of solution B" (p. A22).

PROCEDURE

1. With a pipet, transfer two 5-ml portions of the standard TiO_2 solution and 5 ml of each solution B, to 150-ml beakers.
2. Add 5 ml of water to another beaker, to be used in the preparation of a reagent blank solution.
3. Add about 125 mg of Tiron powder to each beaker with a measuring scoop.
4. With a pipet, add 50 ml of the buffer solution to each solution and mix.
5. Set the spectrophotometer to 430 mμ. Add about 10 to 20 mg of sodium dithionite to the solution to be used as the reagent blank solution and mix gently by rotating the beaker two or three times, but no more, as excessive mixing will cause sulfur to precipitate.
6. After about 1 minute, pour the solution into the absorption cell in the spectrophotometer and adjust the slit width to give 100 percent transmission.
7. Without changing the slit width setting, add dithionite powder to one of the standard solutions, mix, wait for a minute, and obtain the percent transmission. Then do the same to each sample solution and the other standard solution.

CALCULATIONS

1. Convert the readings for percent transmission to absorbance using table 1.
2. Compute the factor:

$$\frac{1.00}{\text{Average of the absorbances of the standard solutions}} = \text{factor}$$

3. Compute percent TiO_2:

$$(\text{Factor}) \times (\text{absorbance of sample solution}) = \text{percent } TiO_2$$

For TiO_2 in carbonate and phosphate rocks, use the same method as described above for silicate rocks.

MnO IN SILICATE, CARBONATE, AND PHOSPHATE ROCKS

The method for the determination of MnO in silicate rocks utilizes the color of the permanganate ion developed by persulfate with silver as a catalyst (Hillebrand and others, 1953). Advantage is taken of the fact that with a sufficiently high concentration of silver complete color can be developed in 1 hour at room temperature.

In the determination, 25 ml of solution B is used. This amount is suitable for MnO ranging from 0 to 3 percent. For the occasional sample in which MnO exceeds 3 percent, a smaller amount should be used.

REAGENTS

Silver nitrate solution, 5 percent: Prepare 100 ml and store in a dark bottle.
Phosphoric acid, 1+1: Prepare 500 ml.
Ammonium persulfate: Dry reagent powder.
Acid blank solution: Dilute 16 ml of 1+1 H_2SO_4 and 10 ml of concentrated HNO_3 to 500 ml with water.
Standard MnO solution: Transfer 0.0531 g of National Bureau of Standards standard sample No. 25b (manganese ore) to a 250-ml beaker and add 25 ml of 1+1 HNO_3, 64 ml of 1+1 H_2SO_4, and 2 to 3 ml of 3 percent H_2O_2. Heat on a hotplate until no black residue remains. Evaporate and then continue heating until fumes of SO_3 evolve. Cool, add 80 ml of 1+1 HNO_3 cautiously and dilute to about 250 ml. If there is a residue, heat until it dissolves. Cool and dilute to 2 liters. The MnO content is 0.02 mg per ml, which is equivalent to that in a solution prepared from a sample containing 1.0 percent MnO as directed under "Preparation of solution B" (p. A22).

PROCEDURE

1. Transfer 25 ml of each solution B, two 25-ml aliquots of the standard MnO solution, and 25 ml of the acid blank to 150-ml beakers.
2. Add 1 ml of 1+1 phosphoric acid to each beaker.
3. Add 1 ml of 5-percent silver nitrate solution.
4. Add 1 dipper of ammonium persulfate powder (about 100 mg).
5. Allow the solutions to stand for 1 hour.
6. Add 25 ml of water and mix.
7. Measure the percent transmission for each solution at 525 mμ using the reagent blank solution as the reference.

CALCULATIONS

1. Convert the readings for percent transmission to absorbance using table 1.
2. Compute the factor:

$$\frac{1.0}{\text{Average of the absorbances of the standards}} = \text{factor}$$

3. Calculate percent MnO:

(Factor) × (absorbance of sample solution) = percent MnO

For MnO in carbonate and phosphate rocks use the same procedure as described above for silicate rocks.

P_2O_5 IN SILICATE ROCKS

The P_2O_5 content of a sample is determined by measuring the light absorbed at 420 mμ by a solution containing the yellow molybdivanadophosphoric acid complex (Kitson and Mellon, 1944). The wavelength of 420 mμ was chosen to provide adequate sensitivity and to minimize the effect of iron. At this wavelength, each 4 percent total iron as Fe_2O_3 in the sample will still cause the value of P_2O_5 to be high by 0.01 percent unless a correction is made.

REAGENTS

Molybdivanadate solution: Dissolve 1.2 g of sodium metavanadate in 400 ml of 1+1 HNO_3. Dissolve 75 g of sodium molybdate ($Na_2MoO_4 \cdot 2H_2O$) in 400 ml of water. Mix the two solutions and dilute to 2 liters.

Standard P_2O_5 solution: Transfer 0.0950 g of Nationual Bureau of Standards standard sample No. 56b (phosphate rock) to a beaker. Add 80 ml of 1+1 HNO_3, boil for a few minutes, cool to room temperature, add 64 ml of 1+1 H_2SO_4, dilute to 2 liters and filter. The concentration of P_2O_5 is 0.015 mg per ml, which is equivalent to that in a solution B prepared from a sample containing 0.75 percent P_2O_5.

PROCEDURE

1. Transfer 25 ml of water, two 25-ml portions of the standard P_2O_5 solution, and 25 ml of each B solution to a series of 100-ml beakers.
2. Add by pipet 25 ml of the molybdivanadate solution to each beaker and mix.
3. Allow the solutions to stand for 5 minutes, then determine the percent transmission at 420 mμ for the standard solutions and the sample solutions using the reagent blank solution (water and reagent) as the reference.

CALCULATIONS

1. Convert the readings for percent transmission to absorbance using table 1.
2. Compute the factor:

$$\frac{0.75}{\text{Average of the absorbances of the standard solutions}} = \text{factor}$$

3. Calculate the apparent percent P_2O_5:

(Factor) × (absorbance of sample solution) = apparent percent P_2O_5.

4. Correct the apparent percent P_2O_5 for the effect of iron:

(Apparent percent P_2O_5) − (percent iron as $Fe_2O_3 \times 0.0025$) = percent P_2O_5.

P_2O_5 IN CARBONATE ROCKS

Use the method described above for silicate rocks unless the concentration of P_2O_5 exceeds 2.5 percent, in which case the method described below for phosphate rocks should be used.

P_2O_5 IN PHOSPHATE ROCKS

The method for the determination of P_2O_5 in phosphate rocks is basically the same as that which is used for silicate and carbonate rocks. Sample solutions are brought to suitable concentration for color development, by double dilution, and standard solutions at three concentration levels are used to compensate for the small deviation of the color system from linearity.

REAGENTS

Standard P_2O_5 solution: Transfer 0.4430 g of National Bureau of Standards standard sample No. 56b (phosphate rock) to a 400-ml beaker. Add about 50 ml of water and 10 ml of concentrated HNO_3, cover the beaker and heat to boiling. Boil for about 5 minutes and allow to cool. Add about 200 ml of water, 16 ml of 1+1 H_2SO_4 and filter. Dilute to 500 ml in a volumetric flask.

H_2SO_4, 1+7: Prepare 1 liter.

Molybdivanadate solution: Dissolve 5 g of sodium orthovanadate, $Na_3VO_4 \cdot 16H_2O$, in 400 ml of 1+1 HNO_3. Dissolve 66 g of sodium molybdate, $Na_2MoO_4 \cdot 2H_2O$, in 400 ml of water. Mix the two solutions and dilute to 2 liters with water.

PROCEDURE

1. Using a pipet, transfer 15 ml of each B solution and two 15-ml portions of the standard P_2O_5 solution to 100-ml volumetric flasks.
2. Dilute the solutions to 100 ml with water and mix.
3. Transfer 15 ml of the diluted B solutions to 100-ml volumetric flasks.
4. With the same 15-ml pipet that was used above, transfer 15, 30, and 45 ml of each solution prepared from the standard P_2O_5 solution.
5. To each of the flasks containing aliquots from the B Solutions and the standard P_2O_5 solutions and to one additional flask, which will be used for the reagent blank solution, add 5 ml of the 1+7 H_2SO_4 solution.
6. Add 25 ml of the molybdivanadate solution to each flask from step 5 using a pipet.
7. Dilute to 100 ml and mix.
8. After 15 minutes determine the percent transmission at 420 mμ using the reagent blank solution as the reference.

CALCULATIONS

1. Convert the readings for percent transmission to absorbance using table 1.
2. Plot the absorbance values for the standard solutions on ordinary coordinate paper. The standards correspond to 14.0, 28.0, and 42.0 percent P_2O_5.
3. Using the absorbances for the samples, read the respective P_2O_5 percentage from the graph.

K_2O AND Na_2O IN SILICATE, CARBONATE, AND PHOSPHATE ROCKS

Potassium oxide and sodium oxide in silicate rocks are determined by a flame photometer method in which lithium is used as an internal standard. The use of an internal standard reduces the effects due to differences in concentration of dissolved salts and differences in viscosity between standard and sample solutions and also reduces deviations in readings brought about by changes in the character of the flame resulting from small variations in air and gas pressure.

Satisfactory results for the alkalies are obtained by comparing each sample solution with two standard solutions—one in which the concentration of the alkali being determined is higher than in the sample solution, and the other in which it is lower. The concentration interval of the standard solutions used is relatively small and as a result the relationship between concentration of K_2O or Na_2O in the standard and sample solutions is almost linear.

REAGENTS

KCl, NaCl, $Li_2SO_4 \cdot H_2O$, all A.C.S. grade.

Stock solution of KCl: Prepare 2 liters of solution in which the concentration of K_2O is 0.5 mg per ml, using 1.584 g of dry KCl and distilled water. Store in a Pyrex or plastic bottle.

Stock solution of NaCl: Prepare 2 liters of solution in which the concentration of Na_2O is 0.5 mg per ml, using 1.886 g of dry NaCl and distilled water. Store in a plastic bottle.

Stock solution of Li_2SO_4: Prepare 10 liters of solution in which the concentration of lithium is 2,000 ppm, using 184.4 g of $Li_2SO_4 \cdot H_2O$ and distilled water. Store the solution in a Pyrex bottle.

Standard K_2O solutions: Prepare solutions equivalent to 0.5, 1, 2, 4, 6, 8, and 10 percent K_2O as follows: To a series of 1-liter volumetric flasks, add 5, 10, 20, 40, 60, 80, and 100 ml of the stock solution of KCl. To each flask add 50 ml of the stock solution of Li_2SO_4, 32 ml of 1+1 H_2SO_4 and 40 ml of 1+1 HNO_3. Make to volume and mix.

Standard Na_2O solutions: Prepare solutions equivalent to 0.5, 1, 2, 4, 6, 8, and 10 percent Na_2O as follows: To a series of 1-liter volumetric flasks, add 5, 10, 20, 40, 60, 80, and 100 ml of the stock solution of NaCl. To each flask add 50 ml of the stock solution of Li_2SO_4, 32 ml of 1+1 H_2SO_4, and 40 ml of 1+1 HNO_3. Make to volume and mix.

Internal standard solution: Prepare 2 liters of solution in which the concentration of lithium is 200 ppm, by diluting 200 ml of the stock solution of Li_2SO_4 with distilled water.

PROCEDURE

1. Light the burner of the flame photometer and adjust the flame as described on page A7.
2. Turn the electric switch on the panel of the flame photometer to the "on" position.
3. Using transfer pipets, add a 25-ml aliquot of solution B to a Pyrex beaker or bottle, add 25 ml of distilled water and 50 ml of the internal standard solution, containing 200 ppm of lithium, and mix.

4. Pour 25 to 30 ml of the standard K_2O solution, in which the concentration of K_2O is equivalent to that of a solution prepared from a sample containing 10 percent K_2O, into a 50-ml beaker and place it in position on the beaker stand so that the atomizer inlet tube is immersed in the solution. As the solution atomizes into the flame, set the element selector to the position of maximum response for potassium.
5. With the same solution (step 4) atomizing into the flame, set the internal standard dial to approximately 90 and adjust the coarse- and fine-gain controls so that the meter reads 50. Remove the beaker containing the standard solution and with no solution atomizing, set the meter to read 50 with the zero adjusting knob. Replace the beaker with the same standard solution and while the solution atomizes, adjust the internal standard dial so that the meter reads exactly 50. Record the setting of the internal standard dial. Remove the beaker and wipe the outside of the liquid inlet tube of the atomizer with a clean lintless tissue.
6. Put 25 to 30 ml of the sample solution (step 3) into a 50-ml beaker and place in position so that it atomizes into the flame. Adjust the internal standard dial so that the meter reads exactly 50. Remove the beaker, wipe the atomizer tube with a tissue, and record the setting of the internal standard dial.
7. Assume the recorded reading to be proportional to the concentrations of potassium in standard and sample solutions, and calculate the approximate concentration of potassium as K_2O.
8. Repeat step 5 using the standard solution with the nearest higher concentration to the estimated concentration of potassium in the sample solution instead of the solution from step 4.
9. Repeat step 6.
10. Repeat step 6 using the standard solution with the nearest lower potassium concentration to the estimated concentration of potassium in the sample solution.
11. With the same solution (step 10) atomizing, shift the position of the internal standard dial and then reset it so that the meter again reads 50. Record the setting of the internal standard dial, remove the beaker and solution and wipe the atomizer tube.
12. Repeat step 6.
13. Repeat step 6 using the higher standard instead of the sample solution.
14. Na_2O is determined on a portion of the same sample solution which was used for the determination of K_2O (step 4). The element selector is set to the position of maximum response for sodium and the Na_2O is determined in the same way as for K_2O.

CALCULATIONS

1. The equation below is used to calculate the concentration of K_2O and Na_2O in the sample solution after averaging the readings obtained for each standard and the sample solution.

$$x=\frac{y-y_1}{y_2-y_1}(x_2-x_1)+x_1$$

where,

x = concentration of K_2O in the sample solution;
y = dial reading for the sample solution;

x_1=concentration of K_2O in the lower standard solution;
y_1=dial reading for the lower standard solution;
x_2=concentration of K_2O in the higher standard solution;
y_2=dial reading for the higher standard solution.

For K_2O and Na_2O in carbonate and phosphate rocks use the same methods as described above for silicate rocks.

TOTAL CaO+MgO IN SILICATE ROCKS

The total amount of calcium and magnesium in silicate rocks can be determined by titration with EDTA using eriochrome black T as the indicator (Betz and Noll, 1950). This can be done in a simple and straightforward manner, without making separations, by automatic titration. Interfering elements such as iron, aluminum, and heavy metals are complexed with cyanide and triethanolamine (Biedermann, and Schwarzenback 1948; Pribil 1953). With this determination and a simple automatic-titration determination of calcium, results for magnesium can be calculated, or conversely, if calcium plus magnesium and magnesium alone are determined, the calcium concentration can be calculated.

It is our practice to determine first the total calcium plus magnesium, and then calcium by the automatic-titration method described below and to calculate magnesium. However, for those samples in which MgO is found to be less than 1 percent, magnesium is determined by the method for "low level" MgO in silicate rocks described below and CaO is calculated. In this way satisfactory results for the full range of calcium and magnesium in silicate rocks can be obtained.

Manganese dioxide acts as though it were MgO in the titration procedure and a small correction is required for it. It has no effect in the spectrophotometric method for "low level" MgO.

REAGENTS

Standard CaO+MgO solution: Transfer 0.400 g of National Bureau of Standards standard sample No. 88 (dolomite), or another sample of dolomite for which the CaO and MgO are known to a 400-ml beaker. Add 100 ml of 1+4 HNO_3, cover and boil 3 to 5 minutes. Cool to room temperature and add 32 ml of 1+1 H_2SO_4. Dilute to 1 liter in a volumetric flask and mix. Store in a plastic bottle.

EDTA solution: Dissolve 20 g of disodium ethylenediamine tetra-acetate in 20 liters of water in the Mariotte bottle and mix well.

Spike solution: Dilute 100 ml of the standard CaO+MgO solution to 1 liter.

Buffer solution: Dissolve 66 g of NH_4Cl in 500 ml of water and mix with 500 ml of concentrated NH_4OH. Store in a plastic bottle.

Eriochrome black T solution, 0.05 percent: Prepare 100 ml. *Do not keep for more than 3 days.*

Acid blank solution: Dilute 10 ml of concentrated HNO_3 and 16 ml of 1+1 H_2SO_4 to 500 ml with water.

Complexing solution: Dissolve 64 g of KCN in 600 ml of water, add 400 ml of triethanolamine, and mix.

Hydroxylamine hydrochloride solution, 10 percent: Prepare 1 liter.

PROCEDURE

1. Transfer 25 ml of each B solution into tall-form titration beakers. To two beakers, to be used in the preparation of standard solutions, add 25 ml of the standard CaO+MgO solution. To two additional beakers, to be used in the preparation of blank solutions, add 25 ml of the acid blank solution.
2. Pipet 10 ml of spike solution into each beaker.
3. With a graduate, add 5 ml of the hydroxylamine hydrochloride solution to each beaker, mix, and allow them to stand for 5 minutes.
4. Add water to each beaker until the levels are at the marks.
5. Add 5 ml of the complexing solution to each beaker. *Do not use a mouth pipet. Use a graduate or a pipet that does not require mouth suction.*
6. Add 20 ml of buffer solution to each beaker with a graduate.
7. Place a magnetic stirring bar in one of the beakers containing a blank solution, add 1 ml of the eriochrome black T solution, put the beaker into the titration chamber of the titration apparatus, and insert the delivery tip just below the surface of the solution, then turn the stirrer switch on.
8. Place the orange filter in front of the photocell and close the cover. (If a spectrophotometer is used, it should be set to 650 mμ).
9. Adjust the light intensity so that the recorder is at about 95 on the chart.
10. Throw the toggle switch permitting the electromagnetic hosecock to open and the recorder to start.
11. As the titration proceeds, the pen which is tracing out the curve moves to the left as the color changes (fig. 13). When sufficient EDTA solution has flowed into the beaker to react completely with the calcium and the magnesium, the pen will no longer move to the left but will trace a line parallel with the direction of the chart movement. Allow the chart to move about 1 inch past this point, turn all switches to "off" and remove the beaker.
12. Repeat steps 7 through 11 with all the remaining solutions.

CALCULATIONS

1. To obtain the end point for each titration (see fig. 13), extend a ruled line from the last part of the curve and rule another line along the part of the curve immediately ahead of the sudden change of direction, so that this line intersects the first line. The end point is at the intersection of the ruled lines.
2. Obtain the length of chart required for each titration in millimeters by measuring between the starting point and the end point.
3. Subtract the average of the lengths of the titrations for the blank solutions from the length for each sample solution to obtain the net lengths of the titrations.

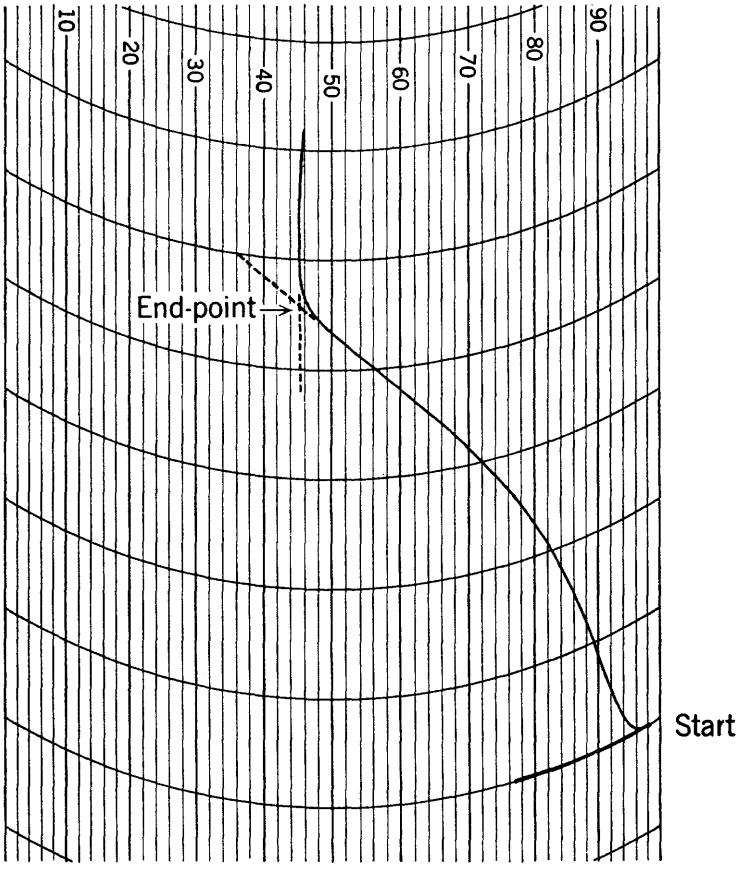

FIGURE 13.—Titration curve.

4. Calculate a factor:

$$\frac{[(\text{MgO, in mg})+(\text{CaO, in mg},\times 0.719)]\text{ in standard}\times 100}{(\text{Average net lengths for the standards})\times(\text{weight of sample, in mg})}=\text{factor}$$

For the National Bureau of Standards standard sample No. 88,

$$\frac{4.34\times 100}{(\text{Average net length for the standards})\times 50}=\text{factor}$$

5. (Net length of sample, in mm) × (factor) = percent CaO+MgO as MgO, uncorrected.
6. Make the correction for MnO:

$$(\text{Percent CaO+MgO as MgO, uncorrected})-\left(\frac{\text{percent MnO}}{4}\right)$$
$$=\text{percent CaO+MgO as MgO}$$

7. The result obtained for CaO+MgO as MgO is used in one of the following calculations:
   (a) The result obtained directly for percent CaO is multiplied by 0.719 to obtain its equivalent percent MgO. This product is subtracted from the CaO+MgO as MgO to obtain percent MgO in the sample.

(b) The value obtained directly for percent MgO is subtracted from the CaO+MgO as MgO to obtain the CaO calculated as MgO. This result is multiplied by 1.39 to obtain percent CaO in the sample.

TOTAL CaO+MgO IN CARBONATE ROCKS

Because CaO and MgO represent the major part of carbonate rocks, a higher accuracy is desirable for them than for the other constituents. The comparatively low level of Al_2O_3 and Fe_2O_3 in these rocks, when complexed with cyanide and triethanolamine (Biedermann and Schwarzenbach, 1948; Pribil, 1953), makes a visual titration feasible. Experience has shown that for carbonate rocks, the visual titration is more accurate than the automatic titration and is therefore to be preferred.

The procedure is similar to that for the automatic titration except that the end point is detected visually. The same dolomite can be used as a standard for both CaO and MgO but A.C.S. grade calcium carbonate serves just as well and is more readily available. Its use at this point conserves the dolomite standard. A measured small quantity of magnesium is added to all solutions prior to titration to ensure the presence of sufficient magnesium to convert the dye to its red complex so that the end-point change will be definite. The titration, always a large one with this type of rock, can be speeded up by decanting a small portion of the solution to be titrated into a small beaker and then titrating the main portion rapidly, going slightly past the end point. When the decanted portion is restored to the main portion, the end point can then be relocated with more care. A mixed indicator is used to provide a small amount of yellow to serve as an internal filter to sharpen the appearance of the end point. Without the yellow added, the color changes from red to purple and then to blue, and it is therefore difficult to determine the end point. With the yellow added, the end point is the complete disappearance of red, a distinctly discernible point.

As in the procedure for silicate rocks, results obtained for CaO +MgO can be used, with results obtained for MgO by either of the methods described below, to calculate CaO.

REAGENTS

Standard solution for CaO+MgO: Transfer 0.500 g of calcium carbonate (low in alkalies), A.C.S. grade, to a 150 ml beaker, add about 25 ml of water and 5 ml of HNO_3, cover with a watch glass, and bring to a boil on a hot plate. Cool to room temperature, add 8 ml of 1+1 H_2SO_4, make to 250 ml in a volumetric flask, and mix.

EDTA solution, 0.3 percent: Dissolve 12 g of disodium ethylenediamine tetra-acetate in 4 liters of water.

Eriochrome black T solution, 0.05 percent: Prepare 100 ml. *Do not store for more than 3 days.*

Hydroxylamine hydrochloride solution, 10 percent: Prepare 1 liter.

Buffer solution: Dissolve 66 g of NH_4Cl in 500 ml of water, add 500 ml of contrated NH_4OH and mix.

Complexing solution: Dissolve 64 g of KCN in 600 ml of water, add 400 ml of triethanolamine, and mix.

Methyl red solution, 0.02 percent: Prepare 1 liter.

Magnesium sulfate solution: Dissolve 6 g of $MgSO_4 \cdot 7\ H_2O$ in 1 liter of water.

PROCEDURE

1. With a 25-ml transfer pipet, transfer two aliquots of the standard solution for CaO+MgO solution, an aliquot of the magnesium sulphate solution, and aliquots of each B solution to a series of 400-ml beakers.
2. Add 5 ml of the hydroxlamine hydrochloride solution to each of the beakers and allow them to stand for 5 minutes.
3. Add about 200 ml of water to each beaker.
4. Add 5 ml of complexing solution to each beaker. *Use a graduate or pipet that does not require mouth suction.*
5. Add 25 ml of the buffer solution to each beaker using a graduate.
6. Add with a transfer pipet 2 ml of the magnesium sulfate solution to each beaker.
7. To one of the solutions containing the standard CaO+MgO, add 1 ml of the erichrome black T solution and 1 ml of the methyl red solution.
8. Decant about 10 ml of the solution into a small beaker and set aside for the moment.
9. Adjust the level of EDTA in the buret to zero, then add the EDTA rapidly to the solution in the 400-ml beaker in slight excess of that needed to get complete color change from red to blue.
10. Pour the solution which had been set aside, back into the 400 ml beaker. The color of the solution should change back to red.
11. Titrate carefully until the red color of the solution disappears and the solution is dull grey-green in color. This is the end point.
12. Repeat steps 6–11 with each of the sample solutions, the magnesium sulfate solution, and finally with the remaining standard CaO+MgO solution.

CALCULATIONS

1. Divide the volume for the titration of the magnesium sulfate solution by 13.5 to obtain the volume of the EDTA equivalent to 2 ml of the magnesium solution.
2. Subtract the volume of EDTA equivalent to 2 ml of the magnesium solution from each titration volume to obtain the volume of EDTA required for the 25 ml of each solution.
3. Taking percent CaO in pure $CaCO_3$, to be 56.0, calculate a factor

$$\frac{56.0}{\text{Average of titration volumes for 25 ml of standards}} = \text{factor}$$

4. Calculate the percent total CaO+MgO, as CaO in each sample: (Factor) × (titration volume for 25 ml of the sample solution) = percent CaO+MgO as CaO.

5. The result obtained for CaO+MgO as CaO is used in the following manner: Percent MgO is multiplied by 1.39 to obtain its equivalent CaO, which is subtracted from the CaO+MgO, to obtain percent CaO.

TOTAL CaO+MgO IN PHOSPHATE ROCKS

Use the same procedure as described above for carbonate rocks. Results obtained in this way can be used to calculate CaO in the same way as for carbonate rocks.

CaO IN SILICATE, CARBONATE, AND PHOSPHATE ROCKS

Calcium oxide in silicate rocks is determined by direct automatic titration of an aliquot of solution B with EDTA using murexide as an indicator.

No separations are required, the iron, aluminum and heavy metals are complexed with cyanide and triethanolamine (Biedermann and Schwarzenbach, 1948; Pribil, 1953).

The aliquot sizes and concentration of reagents were selected to yield the optimum pH range of 12.1–12.3 prior to titration.

REAGENTS

Standard CaO solution: Transfer 0.800 g of National Bureau of Standards standard sample No. 88 (dolomite), or another sample of dolomite for which the CaO and MgO are known accurately, to a 400-ml beaker. Add 200 ml of 1+4 HNO_3, cover, and boil 3 to 5 minutes. Cool to room temperature and add 64 ml of 1+1 H_2SO_4. Dilute to 2 liters in a volumetric flask and mix.

EDTA solution: Dissolve 20 g of disodium ethylenediamine tetra-acetate in 20 liters of water in the Mariotte bottle and mix well.

Spike solution: Dilute 100 ml of the standard CaO solution to 1 liter with water.

NaOH solution, 30 percent: Dissolve 1 lb of NaOH pellets in 1,500 ml of water in a stainless steel beaker. Cool and transfer to a plastic bottle.

Murexide solution, 0.1 percent: Prepare 100 ml. *This solution should not be kept for more than 3 days.*

Ammonium chloride solution, 15 percent: Prepare 2 liters.

Acid blank solution: Dilute 10 ml of concentrated HNO_3 and 16 ml of 1+1 H_2SO_4 to 500 ml with water .

Complexing solution: Dissolve 64 g of KCN in 600 ml of water, add 400 ml of triethanolamine, and mix.

Hydroxylamine hydrochloride solution, 10 percent: Prepare 1 liter.

PROCEDURE

1. Transfer 25 ml of each B solution to titration beakers. To two beakers, to be used in the preparation of standard solution, add 25 ml of the standard CaO solution. To two additional beakers to be used in the preparation of blank solutions, add 25 ml of the acid blank solution.
2. Add 10 ml of spike solution to each beaker with a pipet.
3. Add 5 ml of the hydroxylamine hydrochloride solution to each beaker, mix, and allow them to stand for 5 minutes.

4. Add water to each beaker until the levels are at the mark.
5. Add 5 ml of the complexing solution to each beaker. *Do not use a mouth pipet. Use a graduate or a pipet that does not require mouth suction.*
6. Add 10 ml of ammonium chloride solution to each beaker.
7. Add 10 ml of the NaOH solution. (The solutions should now be at pH 12.1–12.3.)
8. Place a magnetic stirring bar in one of the beakers containing blank solution, add 2 ml of the murexide solution, put the beaker into the titration chamber of the titration aparatus, insert the delivery tip into the solution and switch the stirrer on.
9. Check to see that both the orange and the green filters are in front of the photocell, and close the cover. If a spectrophotometer is used, it should be set to 590 mμ.
10. Adjust the light intensity so that the recorder pen is at about 95 on the chart.
11. Throw the toggle switch permitting the electromagnetic hosecock to open and the recorder to start.
12. As the titration proceeds the pen which is tracing out the curve, moves to the left as the color changes. (See fig. 13.) When sufficient EDTA solution has flowed into the beaker to react completely with the calcium the pen will no longer move to the left but will trace a line parallel with the chart movement. Allow the chart to move about 1 inch past this point, turn all switches to "off" and remove the beaker.
13. Repeat steps 8 through 12 with all the remaining beakers.

CALCULATIONS

1. To obtain the end point for each titration (see fig. 13), extend a ruled line from the last portion of the curve and rule another line, along the portion of the curve immediately ahead of the sudden change of direction so that it intersects the first line. The end point is at the intersection of the ruled lines.
2. Obtain the length of the chart in millimeters required for each titration by measuring between the starting point and the end point.
3. Subtract the average of the lengths of the titrations for the blank solutions from the length for each sample and standard solution to obtain the net lengths of the titrations in millimeters.
4. Calculate a factor:

$$\frac{(\text{CaO, in mg, in the standard}) \times 100}{(\text{Average net length of titrations for standards}) \times (\text{sample weight, in mg})} = \text{factor}$$

or, for standard sample No. 88:

$$\frac{6.10}{(\text{Average net length of titrations for standards})} = \text{factor}$$

5. Calculate precent CaO:

$$(\text{Length of sample titration}) \times (\text{factor}) = \text{percent CaO}$$

Calcium oxide in carbonate rocks is determined indirectly from results obtained for total CaO+MgO and MgO.

Calcium cannot be determined in phosphate rocks by direct titration with EDTA because calcium phosphate precipitates at the pH required for the titration. Good results can be obtained by calculations based on determinations of CaO+MgO and MgO.

MgO IN SILICATE ROCKS

Magnesium oxide is determined either directly using the absorbtion of light at 545 mμ of the thiazole yellow complex (Shapiro, 1959b), or indirectly by calculation from a CaO+MgO result and a CaO result.

If the MgO concentration is about 2.4 percent or less the photometric method is more suitable. Manganese oxide has no effect in this method and no separations are required.

REAGENTS

Standard MgO solution: Prepare 250 ml of solution using 0.500 g of National Bureau of Standards standard sample No. 1a (limestone). Use the procedure for Preparation of solution B.

Complexing solution: Dissolve 64 g of KCN in 600 ml of water, add 400 ml of triethanolamine, and mix.

Acid blank solution: Dilute 10 ml of concentrated HNO_3 and 16 ml of 1+1 H_2SO_4 to 500 ml with water.

NaOH solution, 30 percent: Dissolve 1 pound of NaOH pellets in 1,500 ml of water in a stainless steel beaker. Cool and transfer to a plastic bottle.

Magnesium solution, 0.06 percent: Dissolve 0.60 g of magnesium ribbon in about 20 ml of 1+9 HCl and dilute to 1 liter.

Thiazole yellow stock solution, 0.02 percent: Prepare 1 liter.

Thiazole yellow reagent solution: Add 2 ml of the 0.06 percent magnesium solution to 200 ml of the thiazole yellow stock solution. Prepare fresh solution just prior to use.

Polyvinyl alcohol mixture solution: Add 0.2 g of polyvinyl alcohol to 200 ml of water, in a liter beaker. Heat with stirring until the solution is clear. Add 800 ml of water, 5 ml of 1+1 H_2SO_4, 1.5 g of $Al(NO_3)_3 \cdot 9H_2O$, 40 g hydroxylamine hydrochloride, and stir to dissolve.

PROCEDURE

1. To the first of a series of 100-ml volumetric flasks add 5 ml of acid blank solution, to each of two additional flasks add 5 ml of the standard MgO solution, and to the others add 5 ml of each B solution.
2. Add 5 ml of the polyvinyl alcohol mixture solution to each flask.
3. Add about 60 ml of water to each flask and mix.
4. Add 2 ml of the complexing solution to each flask. *Use a pipet that does not require mouth suction.*
5. To the solution to be used for the reagent blank, add 5 ml of the thiazole yellow reagent solution with a pipet and then immediately add 5 ml of the NaOH solution and mix.
6. Repeat step 5 for each of the solutions, taking first a standard solution, then the sample solutions and finally the second standard solution.
7. Make the solutions up to 100 ml volume with water, mix, and allow to stand for 20 to 30 minutes.
8. Determine the percent transmission at 545 mμ for each solution, taking first a standard solution, then the sample solutions, and finally the second standard solution. Use the reagent blank solution as the reference. (An absorption cell with a path length of 4 to 5 cm and an appropriate holder should be used.)

CALCULATIONS

1. Convert the readings for percent transmission to absorbance using table 1.
2. Compute the factor:

$$\frac{2.19}{\text{Average absorbance of standard solutions}} = \text{factor}$$

3. Calculate percent MgO:

$$(\text{Factor}) \times (\text{absorbance of sample}) = \text{percent MgO}$$

MgO IN CARBONATE ROCKS

For samples in which the concentration of MgO is less than 2.5 percent, the method described above for MgO in silicate rocks is used. When the MgO concentration exceeds 2.4 percent, the method described below is used. With this method, CaO is separated by a single precipitation of calcium oxalate and the MgO in the filtrate is titrated automatically with EDTA using eriochrome black T as the indicator. The method is basically the same as for CaO+MgO in silicate rocks except that CaO is removed prior to titration.

Samples in which the concentration of P_2O_5 exceeds about 1 percent are treated as are phosphate rocks.

REAGENTS

Standard MgO solution: Prepare 250 ml of solution as described under Preparation of solution B, using 0.500 g of National Bureau of Standards sample No. 88 (dolomite), or another dolomite for which the accurate value for MgO is known.

EDTA solution: Dissolve 20 g of disodium ethylenediamine tetraacetate in 20 liters of water in the Mariotte bottle and mix.

Spike solution: Dissolve 48 mg of $MgSO_4 \cdot 7H_2O$ and dilute to 1 liter.

Complexing solution: Dissolve 64 g of KCN in 600 ml of water, add 400 ml of triethanolamine, and mix.

Hydroxylamine hydrochloride solution, 10 percent: Prepare 1 liter.

Acid blank solution: Dilute 10 ml of concentrated HNO_3 and 16 ml of 1+1 H_2SO_4 to 500 ml with water.

Buffer solution: Dissolve 66 g of NH_4Cl in 500 ml of water and mix with 500 ml of concentrated NH_4OH. Store in a plastic bottle.

Eriochrome black T solution, 0.05 percent: Prepare 100 ml. *Do not store for more than 3 days.*

Oxalic acid solution, 10 percent: Prepare 1 liter.

PROCEDURE

1. Transfer two 25-ml aliquots of the standard MgO solution and 25 ml of each B solution to 250-ml volumetric flasks.
2. Transfer 25 ml of the acid blank solution to a 250-ml volumetric flask to be used in the preparation of a reagent blank solution.
3. Add 5 ml of the hydroxylamine solution to each flask.
4. Add 25 ml of the spike solution to each flask.
5. Add about 100 ml of water.

6. Add 5 ml of the complexing solution.
7. Add 10 ml of oxalic acid solution.
8. Add 25 ml of buffer solution to each flask.
9. Make the solutions up to the mark, mix, and allow to stand at least 30 minutes.
10. Pour the solutions through dry 12.5-cm fine-pore filter paper into 200-ml volumetric flasks. Catch 200 ml of each solution.
11. Transfer the contents of the 200-ml volumetric flasks to the 400-ml titration beakers, rinse each flask one time with distilled water, and dilute with water to the line on the beaker.
12. Place a magnetic stirring bar into one of the beakers containing blank solution, add 1 ml of the eriochrome black T solution, put the beaker into the titration chamber of the automatic titration apparatus and insert the delivery tip into the solution.
13. Place the orange filter in front of the photocell. (If a spectrophotometer is used, it should be set to 650 mμ.)
14. Adjust the light intensity so that the pen of the recorder is at about 95 on the chart.
15. Throw the toggle switch permitting the electromagnetic hosecock to open and the recorder to start.
16. As the titration proceeds, the pen which is tracing out the curve moves to the left as the color changes. When sufficient EDTA solution has flowed into the beaker to react completely with all the magnesium, the pen will no longer move to the left but will trace a line parallel with the direction of the chart movement. Allow the chart to move about 1 inch past this point, turn all switches to "off" and remove the beaker.
17. Repeat steps 12 through 16 for the remaining solutions in the following order: a standard solution, all the sample solutions, a second standard solution, and a second blank solution.

CALCULATIONS

1. To obtain the end point for each titration, extend a ruled line from the last part of the curve and rule another line along the part of the curve immediately ahead of the sudden change of direction, so that it intersects the first line. The end point is at the intersection of the ruled lines.
2. Obtain the length (in millimeters) of the chart required for each titration by measuring from the starting point to the end point.
3. Subtract the average of the lengths for the blank solutions from the lengths for each standard and each sample solution to obtain the net lengths of the titrations.
4. Calculate a factor:

$$\frac{\text{Percent MgO in the standard}}{\text{Average length for the standards, in mm}} = \text{factor}$$

5. Calculate percent MgO:

$$(\text{Factor}) \times (\text{length of titration for sample}) = \text{percent MgO}$$

MgO IN PHOSPHATE ROCKS

Magnesium oxide is determined in phosphate rocks by one of two available methods, the choice depending on the level of MgO. In

either procedure calcium is first separated by a single precipitation of calcium oxalate, and the MgO is determined in the filtrate.

For phosphate rocks in which the concentration of MgO exceeds about 1 percent, the method described above for MgO in carbonate rocks is used. Magnesium oxide in those samples in which the concentration is less than 1 percent is determined by the method described below. A direct determination of calcium to yield a calculated MgO, or a direct photometric determination of MgO is precluded because calcium phosphate would precipitate at the pH levels required for either method.

REAGENTS

Standard MgO solution: Prepare 250 ml of solution using 0.250 g of National Bureau of Standards standard sample No. 1a (limestone). Use the procedure for Preparation of solution B, except that 0.250 g of the standard sample is used instead of the usual 0.500 g.

Buffer solution: Dissolve 66 g of NH_4Cl in 500 ml of water, add 500 ml of concentrated NH_4OH, and mix.

Oxalic acid solution, 10 percent: Prepare 1 liter.

Complexing solution: Dissolve 64 g of KCN in 600 ml of water, add 400 ml of triethanolamine, and mix.

Acid blank solution: Dilute 10 ml of concentrated HNO_3 and 16 ml of 1+1 H_2SO_4 to 500 ml with water.

NaOH solution, 30 percent: Dissolve 1 pound of NaOH pellets in 1,500 ml of water in a stainless steel beaker. Cool and transfer to a plastic bottle.

Magnesium solution, 0.06 percent: Dissolve 0.60 g of magnesium ribbon in about 20 ml of 1+9 HCl and dilute to 1 liter.

Thiazole yellow stock solution, 0.02 percent: Prepare 1 liter.

Thiazole yellow reagent solution: Add 2 ml of the 0.06 percent magnesium solution to 200 ml of the thiazole yellow stock solution. Prepare fresh solution just prior to use.

PROCEDURE

1. Transfer two 25-ml- aliquots of the standard MgO solution and 25 ml of each B solution to 200-ml volumetric flasks.
2. Transfer 25 ml of the acid blank solution to a 200-ml volumetric flask to be used in the preparation of a reagent blank solution.
3. Add about 100 ml of water to each flask.
4. Add 5 ml of the complexing solution to each flask. *Use a pipet that does not require a mouth suction.*
5. Add 10 ml of oxalic acid solution.
6. Add 25 ml of buffer solution, fill to the mark, mix and allow to stand for at least 30 minutes.
7. Filter about 100 ml of each solution through dry 12.5-cm fine-pore filter paper.
8. Transfer 75 ml of each filtrate, measured with a graduate, to 100-ml volumetric flasks.
9. Add 5 ml of the polyvinyl alcohol mixture solution to each flask, and mix.
10. To one of the solutions to be used for the reagent blank, add 5 ml of the thiazole yellow reagent solution with a transfer pipet and then immediately add 5 ml of the NaOH solution and mix.

11. Repeat step 10 for each solution taking first a standard, then the sample solutions and finally the second standard solution.
12. Make all the solutions to 100-ml volume with water, mix and allow to stand for 20 to 30 minutes.
13. Using the reagent blank solution as the reference determine the percent transmission at 545 mμ for each solution taking first a standard solution, then the sample solutions, and finally the second standard solution. (An absorption cell with a path length of 4 to 5 cm and an appropriate cell holder should be used).

CALCULATIONS

1. Convert the readings for percent transmission to absorbance using table 1.
2. Compute the factor:

$$\frac{1.10}{\text{Average of absorbances of standard solutions}} = \text{factor}$$

3. Calculate percent MgO:

$$(\text{Factor}) \times (\text{absorbance of sample}) = \text{percent MgO}$$

H_2O IN SILICATE, CARBONATE, AND PHOSPHATE ROCKS

In the determination of H_2O in silicate rocks, water is driven from the sample by heating in a Pyrex test tube with sodium tungstate as a flux (Shapiro and Brannock, 1955b). The water is condensed on a piece of preweighed filter paper in the upper part of a test tube, which is cooled by crushed ice in a polyethylene jacket surrounding the test tube.

The cooling jacket is made from an 8-ounce polyethylene bottle by cutting the top portion off with shears, and cutting holes with a cork borer for insertion of the test tube. The complete arrangement of the apparatus is shown in figure 14.

REAGENTS

Sodium tungstate, anhydrous powder: Fuse several hundred grams of reagent grade $Na_2WO_4 \cdot 2H_2O$. Allow to cool, grind to a fine powder, and store in a jar with a tight-sealing cap.

PROCEDURE

1. Weigh 1.000 g of sample powder, mix with 2 g of anhydrous sodium tungstate and transfer to a dry 18-mm by 150-mm Pyrex test tube by means of a funnel.
2. Cover the fingers of one hand with finger stalls or a rubber glove, roll a piece of 2-inch by 2-inch filter paper into a cylinder, slip it into an 18-mm by 65-mm weighing tube, stopper the tube with a solid rubber stopper, and weigh. The fingers are covered to avoid transfer of moisture from the fingers to the paper.
3. Quickly transfer the paper cylinder from the weighing tube to the upper part of the 18-mm by 150-mm test tube, which contains the sample powder, and stopper with a one-holed stopper.

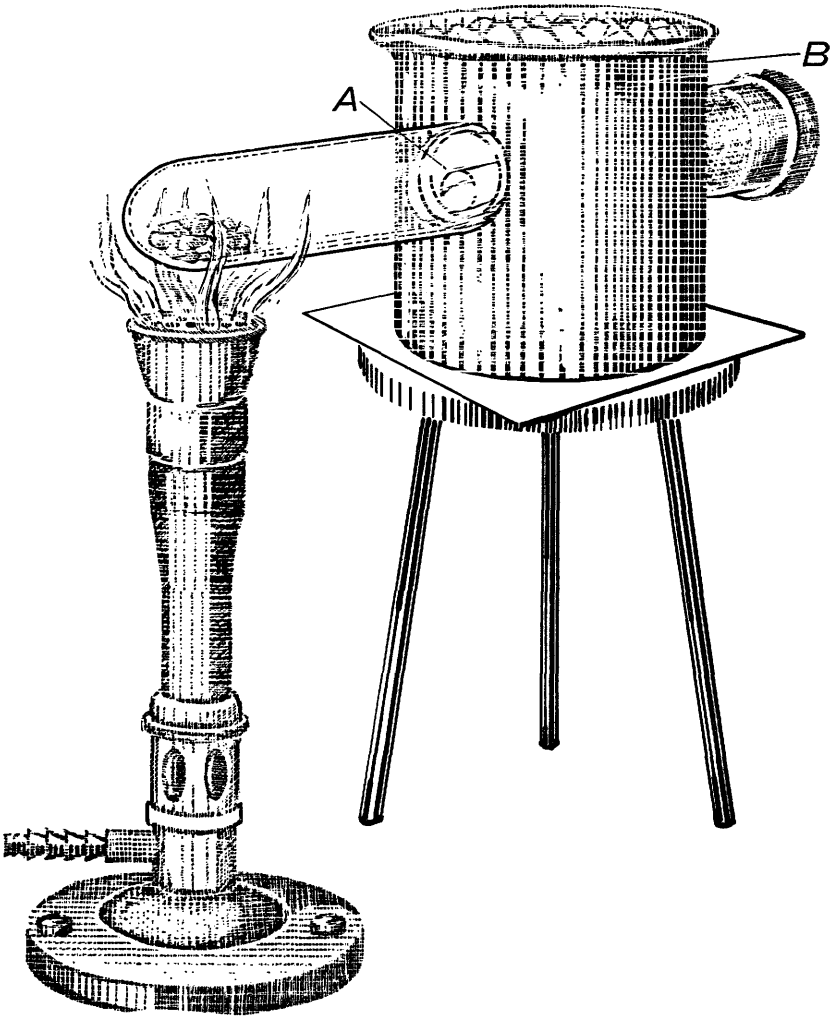

FIGURE 14.—Tube in position for water determination: *A*, coiled paper water absorber; *B*, polyethylene container with crushed ice.

4. Insert the test tube into the polyethylene cooling jacket as shown in figure 14, put crushed ice into the jacket so that the part of the tube enclosed by the jacket is well covered. Then add about 10 to 20 g of NaCl to the crushed ice.
5. Place the cooling jacket with tube in place on a support at a height that will allow the tube to get maximum heat from a Fisher burner (fig. 14).
6. Heat the closed end of the tube, gently at first, then at the full heat of the burner for 5 minutes. Allow to cool for at least 1 minute.
7. Remove the stopper, and with the aid of a narrow spatula quickly wipe the walls of the tube surrounding the paper by gently pressing and rotating the filter-paper cylinder one full rotation. With the fingers covered, quickly

transfer the paper from the test tube to the weighing tube and replace the stopper in the weighing tube.

8. Weigh the tube containing the filter paper plus the absorbed water.

CALCULATIONS

1. Subtract the weight for the paper strip obtained in step 2 from the weight for the paper strip plus water in step 8 to obtain the weight of absorbed water.
2. Calculate percent water:

$$(\text{Absorbed water, in g}) \times 100 = \text{percent } H_2O$$

For H_2O in carbonate and phosphate rocks use the same method as described above for silicate rocks.

FeO IN SILICATE, CARBONATE, AND PHOSPHATE ROCKS

Ferrous iron in silicate rocks is determined by titration with a standard dichromate solution with diphenylamine sulfonic acid as the indicator (Sarver, 1927). The sample is decomposed by boiling with HF-H_2SO_4. A "spike" consisting of a small fixed amount of ferrous ammonium sulfate solution is added to the sample solution just before starting each titration to assure a definitive end point change for samples containing very small amounts of FeO.

REAGENTS

H_2SO_4, 48 percent HF, $K_2Cr_2O_7$, boric acid crystals, all A.C.S. grade. H_2SO_4, 1+3.

Diphenylamine sulfonate indicator solution: Dissolve 0.2 g of sodium diphenylamine sulfonate in 1 liter of water. Add 5 liter of 85 percent H_3PO_4, and mix.

Standard dichromate solution: Weigh 2.728 g of dry National Bureau of Standards potassium dichromate or other pure dry potassium dichromate and dilute to 2 liters in a volumetric flask. The solution contains the equivalent of 2.000 mg of FeO per ml.

FeO spike solution: Dissolve approximately 0.5 g of ferrous ammonium sulfate in 500 ml of water containing a few milliliters of H_2SO_4.

PROCEDURE

1. Weigh 0.500 g of sample and transfer it to a platinum crucible of about 100-ml volume.
2. Add 10 ml of 1+3 H_2SO_4 and, with a plastic graduate, add 5 ml of HF.
3. Cover the crucible, bring to a boil on an electric heater or a gas burner, and boil gently for 10 minutes.
4. While the crucible is heating, add about 10 g of boric acid, about 20 ml of 1+3 H_2SO_4, about 15 ml of the indicater solution, and 5.0 of the spike solution to an 800-ml beaker containing about 500 ml of water and stir for about 1 minute.
5. When the crucible has been heated for 10 minutes, remove from the heat with tongs and immediately immerse it in the solution contained in the 800-ml beaker.
6. With the aid of a stirring rod, remove the crucible from the beaker, rinse it off with water and put it aside.
7. Titrate the solution with the standard dichromate solution to a purple color which persists for 20 to 30 seconds.

8. For each batch of samples, standardize the spike solution by transferring 25.0 ml of the spike solution to a solution containing about 10 g of boric acid, about 20 ml of 1+3 H_2SO_4, and 15 ml of indicator solution and titrating as described in step 7.

CALCULATIONS

1. Divide the titration volume obtained for 25 ml of spike solution by 5 to obtain the blank.
2. Subtract the blank from each of the titration volumes to obtain milliliters of dichromate required for the sample.
3. Compute percent FeO in the sample:

$$\frac{(\text{Dichromate for sample, in ml})\times 2.000}{500}\times 100=\text{percent FeO}$$

or

$$\text{ml}\times 0.4=\text{percent FeO}$$

For FeO in carbonate and phosphate rocks use the same method as described above for silicate rocks.

CO_2 IN SILICATE ROCKS

The concentration of CO_2 in rocks can range from 0 to 47 percent. For silicate rocks, in which the concentration usually does not exceed several percent, a simple method (Shapiro and Brannock, 1955a) which employs a glass tube with a sidearm (fig. 8) for the evolution and measurement of the gas is used. For samples in which the concentration of CO_2 exceeds 6 percent, the method described below for carbonate rocks should be used.

Sample powder, solid mercuric chloride, mercuric chloride solution, paraffin oil, and HCl are added to the carbon dioxide tube and the sample is decomposed by heating the lower part of the tube in a heating bath which is maintained at 115° to 120° C (fig. 15).

A 1-g portion of sample is used for samples in which the concentration of CO_2 ranges from 0 to about 1.5 percent, a 0.5-g portion of sample is used for the range 1.5 to 3.0 percent, and a 0.25-g portion is used for the range 3 to 6 percent.

REAGENTS

HCl, 1+1.

$HgCl_2$: Dry powdered reagent.

$HgCl_2$ solution, saturated: Prepare 500 ml.

Paraffin oil: Heavy, viscosity 335/350.

CO_2 standard: A silicate rock sample (100 mesh) in which the concentration of CO_2 is accurately known. (An accurate concentration can be obtained for the sample by carrying two 5-g portions through the procedure for CO_2 in carbonate rocks described below.)

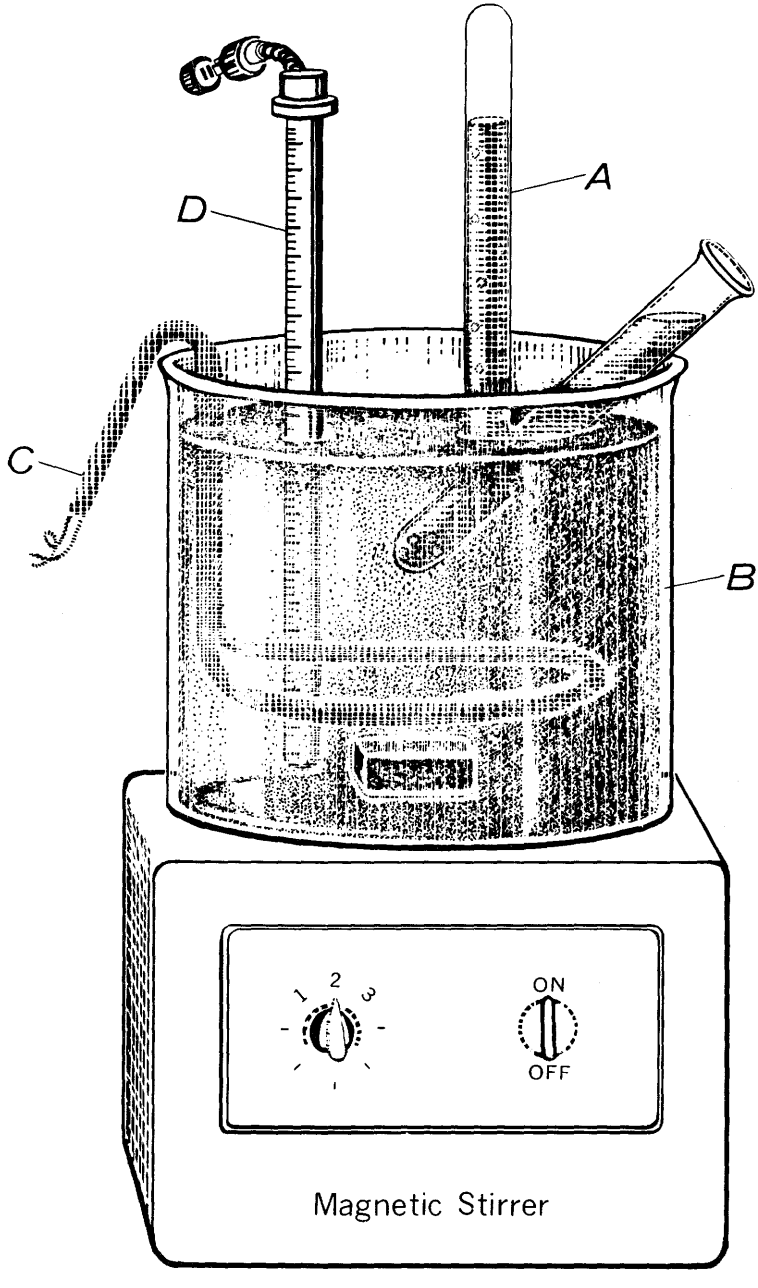

FIGURE 15.—CO_2 tube inserted into oil bath, ready for a determination. *A*, CO_2 tube; *B*, heating bath; *C*, electric heater; *D*, thermostat.

PROCEDURE

1. Weigh 1.00 g of the CO_2 standard and transfer it by means of a dry funnel to the bottom of the carbonate tube.
2. Transfer about 1 g of $HgCl_2$ powder measured with a scoop, to the tube.
3. Add 2 ml of the saturated $HgCl_2$ solution and tap the tube to remove entrapped air bubbles.
4. Add paraffin oil to the mark on the tube, tilt the tube so that the oil displaces the air in the side arm and then return it to a position such that the side arm is vertical.
5. With the side arm vertical, add 2 ml of 1+1 HCl.
6. Place the tube in a clamp so that the side arm is vertical and the lower part of the tube is immersed to the depth of the interface of the water and oil phases in the heating bath liquid, and allow to heat for 5 minutes.
7. Remove the tube from the heating bath, allow cool tap water to flow down the outside of the side arm for 15 seconds and then let the tube stand for 2 minutes.
8. Using a millimeter scale, measure the length of the gas column in the side arm and record the reading.
9. Repeat steps 1 through 8 for the samples and finally for the CO_2 standard again.

CALCULATIONS

1. Calculate a factor:

$$\frac{\text{Percent } CO_2 \text{ in standard}}{(\text{Average gas-column length, in mm, for standard}) \times (\text{sample weight, in g})} = \text{factor}$$

2. Calculate percent CO_2 in the sample:

$$(\text{Factor}) \times (\text{gas-column length of sample}) = \text{percent } CO_2$$

CO_2 IN CARBONATE ROCKS

For samples in which the concentration of CO_2 exceeds 6 percent, CO_2 is determined by an evolution absorption technique in which the volume of CO_2 is calculated after acid evolution and subsequent absorption in a solution of KOH (Goldich and others, 1959).

The sample is decomposed by boiling with a small volume of HCl. The CO_2 which is evolved and the extraneous air in the system are measured in a gas buret and then the gas is bubbled through a KOH solution several times, where the CO_2 is absorbed. Finally, the volume of the remaining air is measured in the gas buret. The difference between the original gas volume and the final gas volume represents the CO_2 in the sample. Standardization with a sample in which the concentration of CO_2 is known accurately, eliminates the need for correction for temperature, barometric pressure, and vapor pressure.

REAGENTS

NaCl-HCl solution: Saturate a 1+3 HCl solution with NaCl and add a few milligrams of methyl red indicator. Prepare 2 liters.

KOH solution, 50 percent: Prepare 4 liters and store the unused portion in a plastic bottle with a tight closure.

Standard $CaCO_3$: The dry reagent, low in alkalies, A.C.S. grade.

PROCEDURE

1. Turn the stopcocks on the buret (*B*) (fig 9), and on the absorption pipet (*C*) so that the channel is open between them. Adjust the level of the KOH in the absorption pipet (*C*) to the reference line by raising or lowering the leveling bulb (*D*), and then close the stopcock on the absorption pipet.
2. With the reaction flask removed, turn the stopcock on the buret so that the channel is open to the condenser and raise the level of the liquid in the buret almost to the stopcock by raising the leveling bulb. Then close the stopcock on the buret.
3. Close the stopcock on the funnel and fill it with the NaCl-HCl solution.
4. Transfer 0.2000 g of the standard $CaCO_3$ to the reaction flask and push the neck of the flask onto the stopper to which the condenser and funnel are attached, so that the connection is gas-tight.
5. Lower the leveling bulb until it is at the same level as the lower part of the buret, then turn the stopcock on the buret so that the channel is open to the reaction flask.
6. Allow about 10 ml of NaCl-HCl to flow from the funnel into the reaction flask, and then close the stopcock of the funnel.
7. Heat the reaction flask, gently at first, then bring the solution to a boil, and allow to boil for 3 minutes.
8. Allow NaCl-HCl solution to flow from the funnel into the reaction flask until the system fills just to the stopcock of the buret. Then close the stopcock on the buret.
9. Hold the leveling bulb beside the cooling jacket so that the liquid levels in the buret and the leveling bulb are in the same plane. Then read the buret and record the reading.
10. Turn the stopcocks on the buret and on the absorption pipet so that the channel is open between the buret and the pipet and cause the gas to bubble through the KOH in the absorption pipet by raising the leveling bulb until the liquid in the buret is almost at the top of the buret. Reverse the stopcock on the absorption pipet and lower the leveling bulb until the KOH in the pipet is about at the reference line. Pass the gas to the absorption pipet and back to the buret an additional three times.
11. Finally, adjust the KOH level to the reference line and close the stopcocks on the absorption pipet and the buret, bring the levels of the liquid in the leveling bulb and the buret to the same plane, read the buret and record the reading.
12. Remove the reaction flask and rinse the portions of the condenser and the funnel, which extend below the rubber stopper, with distilled water.
13. Repeat steps 2 to 12 for each sample and again for the standard $CaCO_3$.

CALCULATIONS

1. Calculate the volumes of CO_2 evolved:

$$\text{Volume (step 9)} - \text{volume (step 7)} = \text{ml of } CO_2$$

2. Calculate a factor:

$$\frac{\text{Percent } CO_2 \text{ in the standard}}{\text{Average volume } CO_2 \text{ in ml, from the standard}} = \text{factor}$$

3. Calculate precent CO_2 in the samples:

$$(\text{Factor}) \times (CO_2\text{, in ml, from the sample}) = \text{percent } CO_2$$

CO_2 IN PHOSPHATE ROCKS

For phosphate rocks in which the CO_2 concentration does not exceed 6 percent, the method described for silicate rocks is used, and for phosphate rocks in which the concentration exceeds 6 percent the method described for carbonate rocks is used.

TOTAL SULFUR IN PHOSPHATE ROCKS

In phosphate rocks, sulfur usually occurs in acid soluble sulfates or in pyrite, both of which can be taken into solution with aqua regia. The sulfur in this solution can be determined conveniently by precipitating and weighing as $BaSO_4$.

REAGENTS

Barium chloride solution, 10 percent: Prepare 1 liter.
HNO_3, concentrated.
HCl, concentrated.
CCl_4, A.C.S. grade.

PROCEDURE

1. Transfer 1-g portions of the samples to 150-ml beakers.
2. To each, add about 3 ml of CCl_4.
3. To each, add about 10 drops of HNO_3 and 5 ml of HCl.
4. Cover the beakers with watch glasses and place on a steam bath and heat until the HNO_3 is decomposed (until brown fumes stop coming off).
5. Remove the watch glasses, and evaporate to dryness.
6. Add 25 ml of water to each beaker, add about 2 drops of 1+1 HCl, bring the solutions to a boil, and boil for about 1 minute.
7. Filter through fine-pore filter paper and catch the filtrates in 150-ml beakers. Wash the residues in the original beakers two times and wash the filter paper four times using small portions of water for each washing.
8. Add 10 ml of the barium chloride solution to each filtrate.
9. Allow the filtrates to stand until some clear supernatant liquid appears, usually about 10 minutes.
10. Filter through fine-pore filter paper. Transfer the precipitates to the filters. Scrub each beaker with a policeman to assure complete transfer. Wash each filter about 10 times with water, allowing complete drainage between washings.
11. Fold and transfer the filter papers containing the precipitates to clean porcelain crucibles.
12. Burn off the papers over the low flame of a bunsen burner. Then heat at the full heat of the burner for about 20 minutes, or until only a white residue remains.
13. Cool the crucibles to room temperature.
14. Transfer the contents of one of the crucibles to a tared watch glass and weigh.
15. Repeat step 14 for each sample, brushing the tared watch glass clean between each weighing.

CALCULATIONS

Multiply the weight of $BaSO_4$, in grams, for each sample by 34.3 to obtain percent total sulfur as SO_3.

ACID SOLUBLE F IN PHOSPHATE ROCKS

Fluorine is a normal constituent of phosphate rocks in which the concentration range is usually from 0 to about 4 percent. It occurs mainly in apatite which is acid soluble.

The method is based on the bleaching effect of fluoride on the calcium-aluminum alizarin red-S complex, the system which is used in the determination of aluminum (Shapiro, 1960).

The determinations are made on nitric acid solutions after the removal of the exchangeable cations with ion exchange resins.

REAGENTS

Stock aluminum solution: Dissolve 87.5 mg of aluminum foil in about 5 ml of 1+1 HCl in a 100-ml volumetric flask. Dilute to volume and mix.

Reagent aluminum solution: Dilute 10 ml of the stock aluminum solution to 1 liter with water.

Nitric acid, 1+3: Prepare 500 ml.

Calcium nitrate solution, 2.0 percent: Dissolve 10 g of $Ca(NO_3)_2 \cdot 4H_2O$ in 500 ml of water.

Buffer solution: Dissolve 100 g of $NaC_2H_3O_2 \cdot 3H_2O$ in about 300 ml of water; add 30 ml of glacial acetic acid and dilute to 500 ml.

Alizarin red-S solution, 0.1 percent: Prepare 1 liter and filter.

Standard F sample: National Bureau of Standards standard sample 56b (phosphate rock) or another phosphate rock sample that contains between 3 and 4 percent F, and for which the concentration of fluorine is known.

Cation exchange resin Amberlite IR–120 (H) or equivalent.

A resin column (or preferably several columns). Insert a glass wool plug just above the stopcock of a 100 ml buret and add the ion exchange resin, which should be in the hydrogen form, until the buret or column is half filled.

PROCEDURE

1. To a series of 100-ml volumetric flasks add 50 mg of the standard sample, 25 mg of the standard sample, and 50 mg of each of the samples.
2. Add 10 ml of 1+3 HNO_3 to each flask and to an additional flask to be used in the preparation of an acid blank. Allow the flasks to stand for 10 minutes.
3. Dilute the solutions to the mark and mix.
4. Adjust the height of water in the resin column so that it is slightly above the resin. Transfer 10 ml of one of the solutions to the column and allow liquid to drip from the bottom of the column at the rate of about 1 drop per second. Catch the effluent in a 100-ml volumetric flask. As the level of the liquid approaches the top of the resin add 10 ml of water to the column. Repeat this process with 10 ml and then 30 ml of water. Catch a total volume of 60 ml.
5. Repeat step 4 with all samples and standards except for the acid blank solution.
6. Transfer 10 ml of the acid blank solution to two empty 100-ml volumetric flasks, and add about 50 ml of water to each. One of these flasks serves as a reference blank, the other is used in the preparation of a reference aluminum solution.

7. To one of the flasks containing only acid and water, (step 6) and to all of the other volumetric flasks treated as described in steps 4 and 5, add 15 ml of the reagent aluminum solution with a transfer pipet.
8. Add 2 ml of the calcium nitrate solution to the flasks.
9. Add 10 ml of the buffer solution with a graduate to the flasks, swirling them as the addition is made. Allow them to stand for 10 minutes.
10. With a transfer pipet, add 5 ml of the alizarin red-S to each flask while swirling. Dilute to the mark and mix.
11. Determine the percent transmission at 475mμ for each solution using the blank solution as a reference.

CALCULATIONS

1. Convert the readings for percent transmission to absorbance using table 1.
2. Subtract the absorbance of the standards and samples from that of the reference aluminum solution. The differences vary with the fluorine content.
3. Plot the differences obtained in calculation step 2 for the solution prepared from 50 mg of the standard sample and for the solution prepared from 25 mg of the standard sample on regular graph paper against percent F and percent F/2. Draw a line between these points and a line to the zero point from the lower point. The relation is not linear so that interpolation gives better results than would be obtained by assuming a straight-line relation for the entire range.
4. Using the absorbances of the sample solutions read percent F from the graph.

REFERENCES CITED

Bandemer, S. L., and Schaible, P. J., 1944, Determination of iron: Indus. and Eng. Chemistry, Anal. ed., v. 16, p. 317–319.

Barredo, J. M. G., and Taylor, J. K., 1947, Automatic recording of titrations: Electrochem. Soc. Trans., v. 92, p. 437–440.

Betz, J. B., and Noll, C. A. 1950, Total hardness determination by direct colorimetric titration: Am. Water Works Assoc. Jour., v. 42, p. 49–56.

Biedermann, W., and Schwarzenbach, G., 1948, Complexons XI. The complexometric titration of alkaline earths and some other metals with eriochrome black T: Chimia, v. 2, p. 56.

Bunting, W. E., 1944, The determination of soluble silica in very low concentration: Indus. and Eng. Chemistry, Anal. ed., v. 16, p. 612–615.

Fairbairn, H. W., and others, 1951, A cooperative investigation of precision and accuracy in chemical, spectrochemical, and modal analysis of silicate rocks: U.S. Geol. Survey Bull. 980, 71 p.

Goldich, S. S., Ingamells, C. O., and Thaemlitz, D., 1959, The chemical composition of Minnesota Lake marl—comparison of rapid and conventional chemical methods: Econ. Geology, v. 54, p. 285–300.

Hillebrand, W. F., Lundell, G. E. F., Bright, H. A., and Hoffman, J. I., 1953, Applied inorganic analysis: 2d ed., New York, John Wiley and Sons, p. 447.

Kitson, R. E., and Mellon, M. G., 1944, Colorimetric determinations of phosphorus as molybdivanadophosphoric acid: Indus. and Eng. Chemistry, Anal., ed., v. 16, p. 379–383.

Parker, C. A., and Goddard, A. P., 1950, The reaction of aluminum ions with alizarin-3-sulphonate, with particular reference to the effect of calcium ions: Anal. Chimica Acta, v. 4, p. 517–536.

Pribil, R., 1953, Screening of aluminum, iron, and manganese in titrations to murexide as indicator: Chem. Listy, v. 47, p. 1333–1337.

Sarver, L. A., 1927, The determination of ferrous iron in silicates: Am. Chem. Soc. Jour., v. 49, p. 1472–1477.

Shapiro, Leonard, 1959a, Design of Teflon vessel for decomposition of rock samples: Chemist-Analyst, v. 48, p. 46.

——— 1959b, Rapid photometric determination of low level magnesium in rocks: Chemist-Analyst, v. 48, p. 73–74.

——— 1960, Rapid determination of fluorine in phosphate rocks: Anal. Chemistry, v. 32, No. 4, p. 569–570.

Shapiro, Leonard, and Brannock, W. W., 1952, Rapid analysis of silicate rocks: U.S. Geol. Survey Circ. 165, 17 p.

——— 1955a, Rapid determination of CO_2 in silicate rocks: Anal. Chemistry, v. 27, p. 1796–97.

——— 1955b, Rapid determination of water in silicate rocks: Anal. Chemistry, v. 27, p. 560–564.

——— 1956, Rapid analysis of silicate rocks: U.S. Geol. Survey Bull. 1036–C, p. 19–56.

——— 1959, Multiple pipetting device: Chemist-Analyst, v. 48, p. 100.

Stevens, R. E., and others, 1960, Second report on a cooperative investigation of the composition of two silicate rocks: U.S. Geol. Survey Bull, 1113, 126 p.

Yoe, J. H., and Armstrong, A. R., 1947, Colorimetric determination of titanium with disodium-1,2-dihydroxybenzene-3,5-disulfonate: Anal. Chemistry, v. 19, p. 100–102.

○