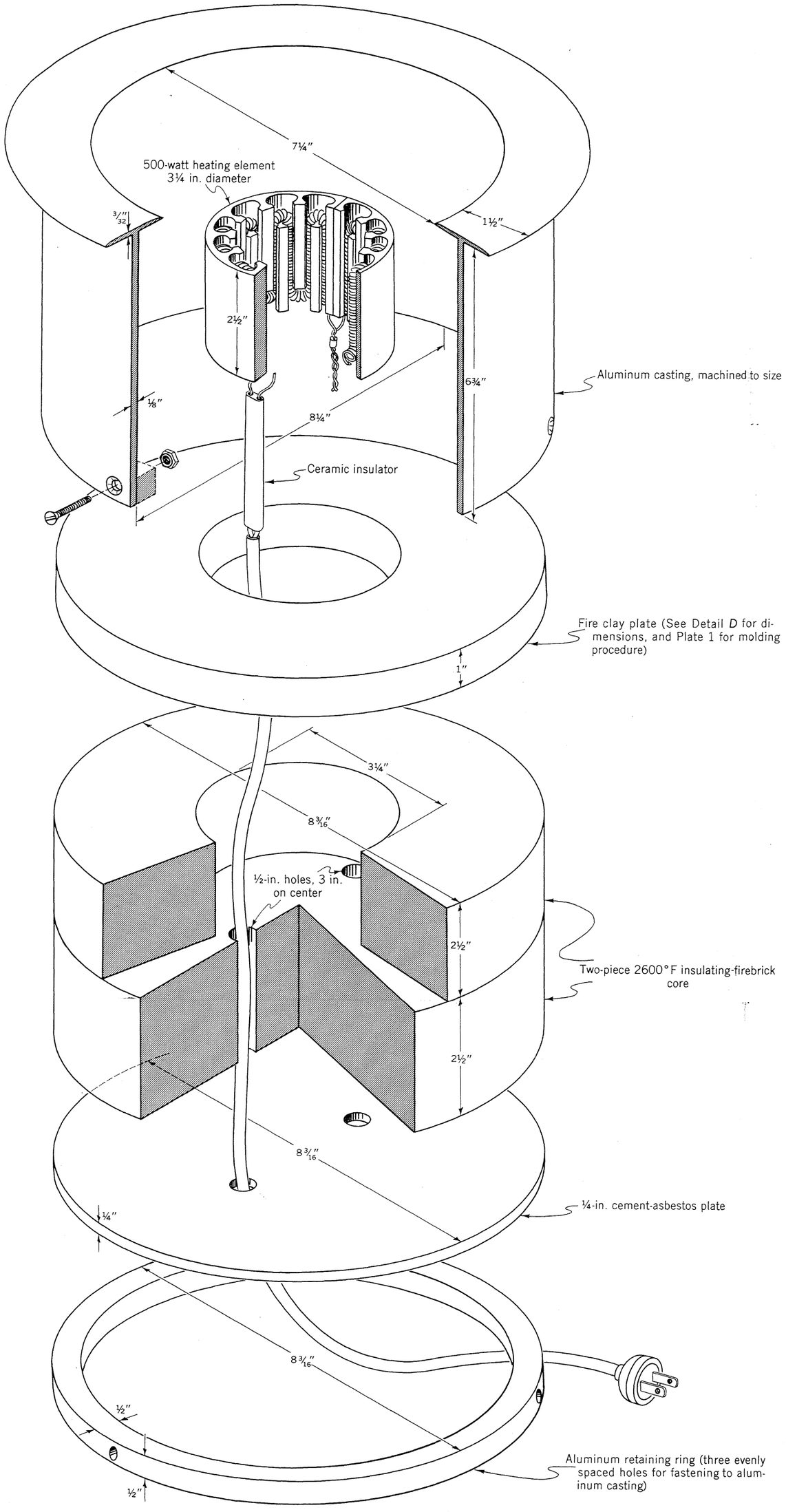

DETAIL *A*
Exploded view of radiator

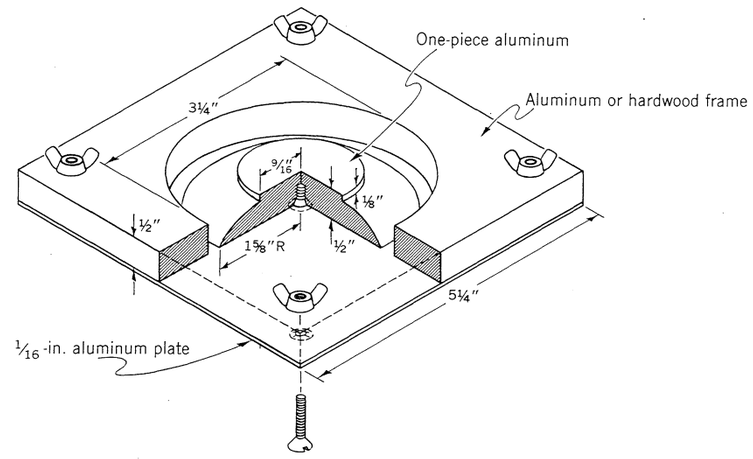

DETAIL *B*
Ceramic ring adapter mold

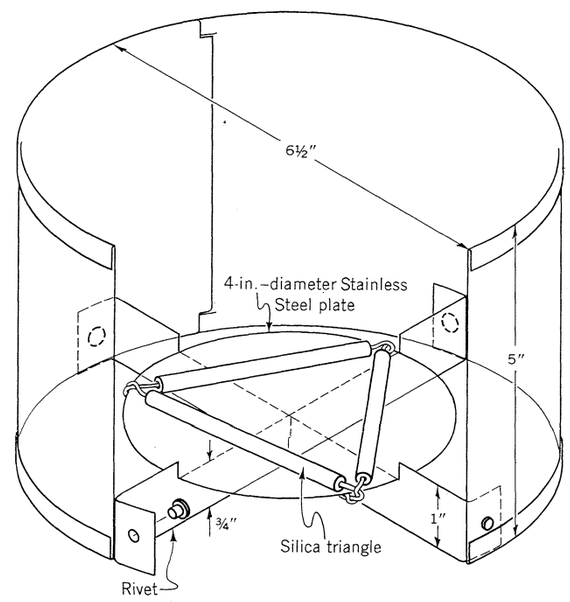

DETAIL C
Stainless Steel adapter

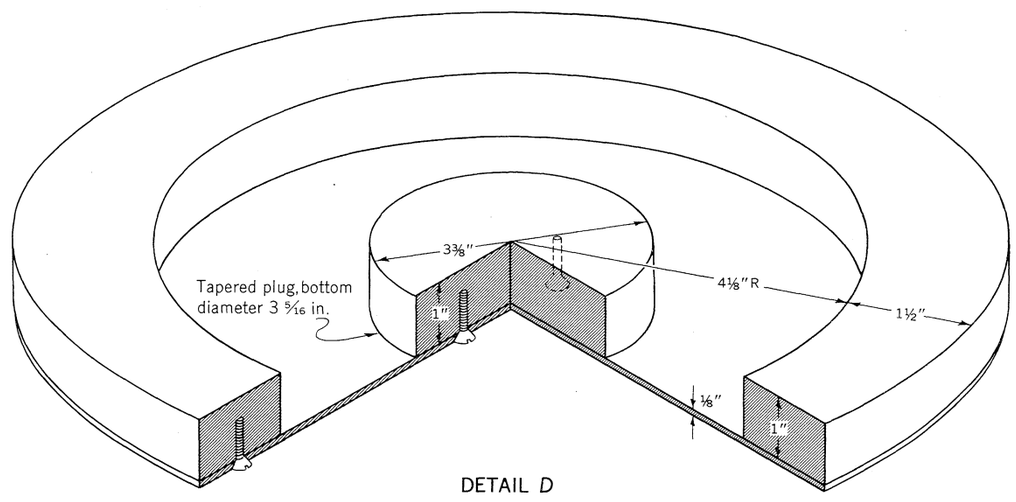

DETAIL *D*
Fire clay plate mold (all aluminum)

DETAILS OF ELECTRIC RADIATOR

Perspective drawing by Fred Hostetler

713-992 O - 64 (In pocket)