UNITED STATES DEPARTMENT OF THE INTERIOR J. A. Krug, Secretary.

GEOLOGICAL SURVEY W. E. Wrather, Director.

RCULAR 17 September 1947

EQUIPMENT FOR RIVER MEASUREMENTS

STRUCTURES FOR CABLEWAYS

By

Charles H. Pierce

WASHINGTON, D. C.

UNITED STATES DEPARTMENT OF THE INTERIOR J. A. Krug, Secretary.

GEOLOGICAL SURVEY W. E. Wrather, Director.

CULAR 17 September 1947

EQUIPMENT FOR RIVER MEASUREMENTS

STRUCTURES FOR CABLEWAYS

By

Charles H. Pierce

WASHINGTON, D. C.

STRUCTURES FOR CABLEWAYS

CONTENTS

	Page
Introduction	1
Cableway across Columbia River above Celilo Falls, Oregon	2
Design	4
Measurement of the span	5
Loads	5
Types of construction	8
Wire rope	9
6 x 7 wire rope	10
6 x 19 wire rope	10
Tramway track strand	10
Grades of steel	11
Fatigue due to vibration	11
Computations	12
Formulas	12
Elongation under load	14
Modulus of elasticity	15
Erection sag	16
Supports at different elevations	20
Tension in backlines	21
Bending moment in towers and A-frames	21
Effect of changes in temperature	21
Measurement of length	24
Factors of safety	25
Specifications	26
Anchorage connections	27
Thimble-and-clip connections	28
Sockets	29
Take-up at socket connections	30
Galvanizing	30
Anchorages	31
Design	31
Supporting structures	33
Heights of supports	33
Towers	33
Steel A-frames	34
Steel post support	35
Timber A-frames	35
Footings	35
Grounding	36
Bearings at tops of supports	37
Sheaves	37
Pin connections	37
Saddles	37
Gaging cars	37
Type-A gaging car	38
Type-B gaging car	38
Accessories	38

ILLUSTRATIONS

Page

Plate 1. Columbia River above Celilo Falls, Oregon 2
2. Sag diagrams for improved plow-steel 6 x 7 wire rope . . . 14
3. Sag diagrams for extra high strength tramway track strand 14
4. Computation of erection sag for extra high strength tramway track strand 16
5. Anchorages for 3/4 -inch cableway 32
6. Anchorages for 7/8 -inch cableway 32
7. Anchorages for 1 -inch cableway 32
8. Sidehill anchorages 32
9. T-beam anchorage for 3/4 -inch cableway 32
10. Square steel tower, Wilsonville, Oregon 34
11. Square steel tower, Wilsonville, Oregon; bill of material 34
12. Square steel tower, Maryhill, Washington 34
13. Square steel tower, saddle for 1 3/8 -inch tramway track strand 34
14. Steel A-frames, 10 and 15 feet 34
15. Steel A-frames, 20 and 25 feet 34
16. Steel A-frames, 30 feet 34
17. Steel A-frames, 35 feet 34
18. Steel A-frames, 40 feet 34
19. Steel post support 34
19-A. Steel post support footing 34
20. Timber A-frames 34
21. Type-A gaging car, with roof 38
21-A. Type-A gaging car, with roof; bill of material 38
22. Type-B gaging car, structural aluminum 38
23. Type-B gaging car, with roof 38
24. Colorado River type gaging car 38
25. Gaging car puller, Colorado River type 38

TABLES

Page

Table 1. Weight per foot, net cross-sectional area, and breaking strength of galvanized plow-steel 6 x 7 wire rope . . . 7

2. Weight per foot, net cross-sectional area, and breaking strength of smooth-coil round-wire galvanized tramway track strand 7

3. Erection sag d required for a specific loaded sag D for E = 20,000,000 and 22,000,000. Extra high strength tramway track strand with safety factor of 4 16

4. Allowable soil pressure in tons (2,000 pounds) per square foot 36

STRUCTURES FOR CABLEWAYS

By Charles H. Pierce

Introduction

Cableways and other structures that are used in connection with measurements of river discharge are designed for definite and specific purposes, and the various conditions that may affect their use require careful consideration. The selection of the site for a cableway should be made with due regard to the hydraulic conditions of the river as well as to the formation of the river banks. In current-meter measurements, the direction and pattern of the stream flow and its possible effect on the performance of the current meter are of major importance. The channel should be straight at the place of measurement and the river should be flowing smoothly, without eddies or cross-currents. It is desirable that the flow should be in one channel at all stages; sections having overflow or diversions into old channels should be avoided if possible. Particles of drift in surface flotation that may be observed from the river banks or a boat should move in parallel straight lines and in a direction that is parallel with the river banks. The section should be free of large rocks and boulders; the bottom should be as smooth as is obtainable. It is always desirable to observe conditions at various stages of the river, especially at medium and high stages, before deciding upon the site.

The fundamental principles that underlie the proper use of the current meter in making discharge measurements are fairly-well established, although the methods of procedure may differ with the various conditions that are encountered and with the available equipment. To obtain an accurate measurement of the discharge it is necessary to determine the depth at definite places in a cross section of the channel and to measure the velocity at each of those places. Therefore, the method of procedure should permit the placement of the current meter at definite and specific positions in the cross section.

Current-meter measurements are made from bridges or cableways, by wading, from ice cover, from boats, or from improvised structures in accordance with the circumstances and conditions at the place of measurement. The general procedure to be employed in each of these types of measurement has been described elsewhere 1/.

Because of the more satisfactory conditions of velocities and stream bed that are generally obtainable at sites selected for cableway installations, as well as the more convenient arrangements for the suspension and placement of the current meter, cableways are preferred to bridges or boats for rivers that can be safely spanned with ordinary types of structures. Outstanding examples of cableway construction are the 1 1/4 -inch

---

1/ See Water-Supply Paper 888 - Stream-gaging procedure, pp. 13 - 28.

galvanized tramway track-strand cableway with a clear span of 1,654 feet at the gaging station on the Columbia River at Trinidad, Wash. 2/, and the 1 3/8 -inch galvanized tramway track-strand cableway with a clear span of 1,727 feet at the measuring section on the Columbia River 9 miles upstream from Celilo Falls, Oreg., that is shown in the photograph. (Plate 1).

Cableway across Columbia River above Celilo Falls, Oregon

The cableway above Celilo Falls, Oreg. is an outstanding example of cableway construction, not only for the length of span and the height of the towers but also because of the unusual features of its design and operation. It was constructed under the supervision of George H. Canfield, district engineer, and is used for discharge measurements in determining the flow of the Columbia River at The Dalles, Oreg. The first measurement from this cableway was made on January 28, 1937. The following are some of the interesting features of its design and construction.

The clear span between centers of towers is 1,727 feet. A 1 3/8 -inch galvanized extra-high-strength tramway track strand of 37 wires furnishes the track for the gaging car. Above this strand there is a 5/8 -inch galvanized extra-high-strength tramway track strand of 19 wires that was used as a messenger cable in the erection of the 1 3/8 -inch strand. After that erection was completed, the 5/8 -inch strand was cut to the desired length, field socketed, and erected for an electrical conductor to provide current for the airways warning lights. It is insulated from the towers by strain insulators. The other side of the circuit is grounded to the 1 3/8 -inch strand. Stockbridge vibration dampers on both the 5/8 -inch and the 1 3/8 -inch strands prevent destructive resonant vibrations. The four individual strands shown in the photograph (pl. 1), which was taken from the Washington side of the river looking toward Oregon, may be described as follows:

1. The upper is a 3/4 -inch galvanized extra-high-strength steel strand that is attached at the tower to a plate-fitting to which the 5/8 -inch tramway track strand (electrical conductor) is dead-ended. At the lower end it is attached to a turnbuckle that is connected to an eye-bolt in a T-type concrete anchorage.

2. The second, downward, of the inclined strands is the 1 3/8 -inch strand mentioned above. It passes continuously over a saddle in the tower to an open bridge socket with 9 feet 4 inches take-up to an eyebolt in the same T-type concrete anchorage on the Oregon side of the river that is used for the anchorage of the 3/4 -inch strand. On the Washington side of the river an open socket is used for attachment to a T-type concrete anchorage which is also the same anchorage that is used for the 3/4 -inch strand.

3. The third, downward, is also a 3/4 -inch steel strand that is the same as the upper strand except that its upper end is five feet lower where it is attached to the base of the main saddle.

2/ See Water-Supply Paper 962, plate 1, for photograph.

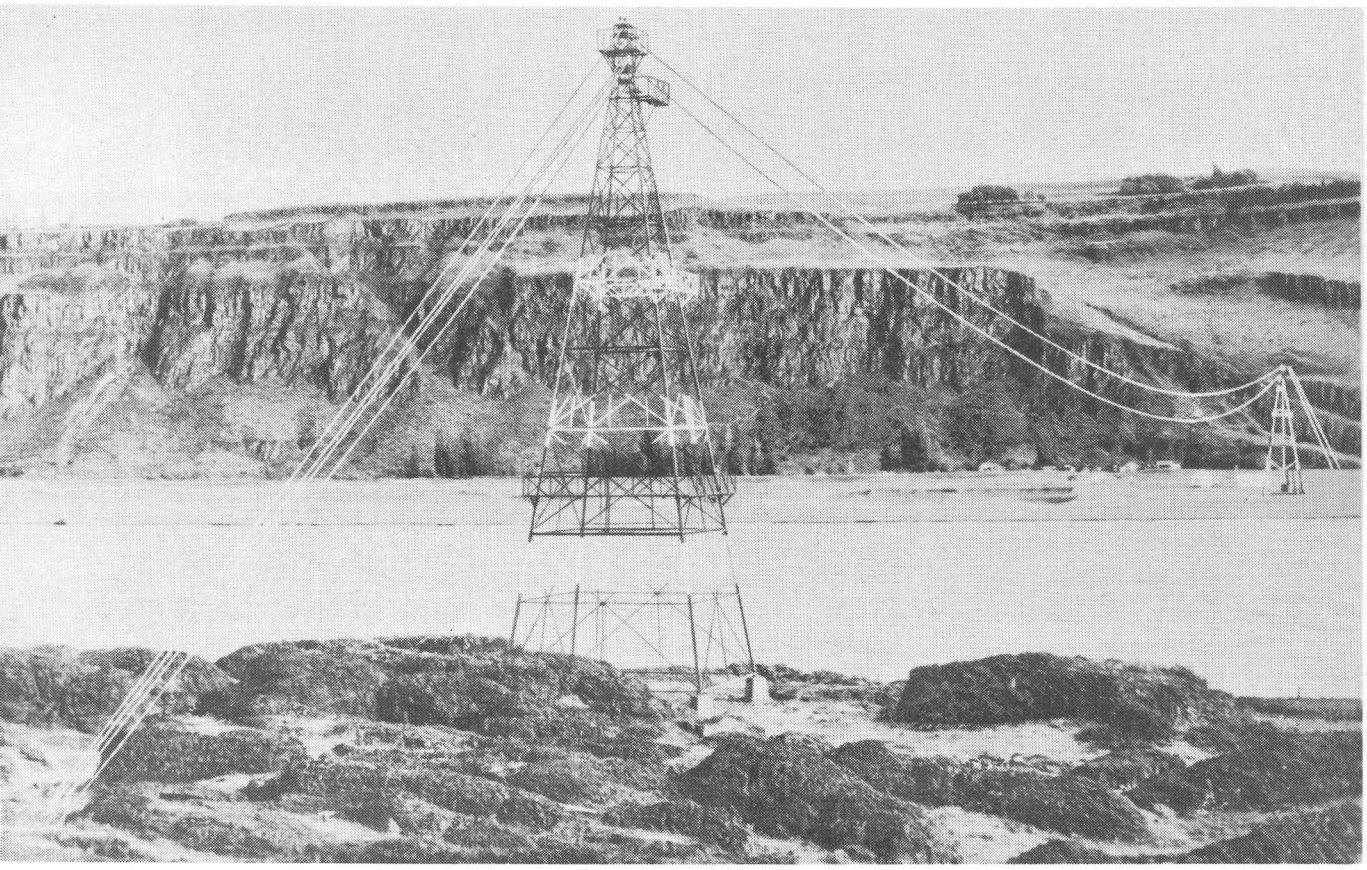

Columbia River above Celilo Falls, Oregon

STRUCTURES FOR CABLEWAYS, PLATE I

4. The lowest of the four strands is a 1/2 -inch galvanized standard-steel strand that is attached to the tower at its upper end and to a separate concrete anchorage at its lower end. It carries a sheave to which is attached a 140-pound counterweight. A 1/4 -inch galvanized wire rope about 200 feet in length is attached to the counterweight. The other end of the wire rope is provided with a lever clamp for attachment to the 1 3/8 -inch tramway track strand at the cable car after the rapid descent of the car down the incline has been sufficiently checked by the action of the counterweight. On the return to the landing platform at the tower, the pull exerted by the counterweight assists the occupants of the car in the ascent of the steep slope adjacent to the tower.

The towers are 101 feet in height above the tops of the concrete piers which are at an elevation of 174.00 feet above mean sea level. The tops of the piers on the Washington side of the river shown in the foreground (pl. 1) are 5 feet above the ground surface; those on the Oregon side are 13 feet.

In accordance with the requirements of the Bureau of Air Commerce, Department of Commerce, which were mandatory under the provisions of the permit issued by the War Department, each tower was painted throughout its height with alternate bands of international orange and white, the widths of the orange bands being one-seventh of the height of the tower and the widths of the white bands one-half of the orange. The towers were required to be lighted in accordance with the following specifications:

> At the top of each tower there shall be installed two 50-watt lamps so equipped with a relay for instant switchover in the event of lamp failure.
>
> At both the one-third and two-third levels of each of the towers there shall be installed two 50-watt lamps, these lamps being placed at each level in such a manner that there will always be at least one light visible at each level.
>
> All lamps shall be inclosed in red Holophane globes and shall burn from dusk to dawn.

Compliance with the last specification was made by installing one pair of 60-watt lights in red Holophane globes on diagonally opposite corners of the tower at the one-third and two-thirds heights, the lights at each height being on the opposite corners from those at the other height.

As the nearest source of commercial power was 12 miles distant, it was necessary to provide power at the site. This power consists of two Model D 1700 S fully-automatic 800 watt, 110 volt D.C. Kohler air-cooled gasoline-engine-driven electric generators.

The cost of the complete cableway installation was $15,000, including the two electric-generator plants, the air-conditioned power house, the astronomical clock and time switch, the switchboards and wiring for the airways warning lights, the obstruction markings, and the warehouse with living quarters for engineers visiting the station for discharge measurements. Because of the strong winds prevalent in the area from about 10 a.m. to 8 p.m., it is necessary to begin a discharge measurement in the early morning as soon as there is light enough to see.

Design

Important considerations in the design of cableway structures are the clear span between the supports, the weight of the wire rope or strand and the concentrated load, the loaded and the unloaded sag, the effect of changes in temperature, and the heights of the supports required for the necessary clearance above low water and extreme high water. The design of the wire rope or strand consists of the determination of the necessary length; the correlation of sag and allowable stress for any loading that may occur when the cableway is in use, including an allowance for the effect of changes in temperature; and the selection of the size and kind of wire rope or strand that will meet the requirements most satisfactorily.

As the several parts of the design are interrelated to a considerable extent, some preliminary computations may be required before the final decision is made as to the size and the necessary sag. The use of sag diagrams, similar to those shown in plates 2 and 3, may be helpful in the preliminary computations. In some circumstances, especially for long spans, it may be found desirable and economical to place the supports for a minimum length of span, even though high supports are required; whereas for short spans a saving of a few feet in the length of span may not be of as great importance as a reduction in the heights of the supports. The physiography of the river banks and the approaches to the cableway may determine the positions of the supporting structures and, therefore, the length of the span as well as the size and shape of the footings and anchorages. If possible, these should be on ground not subject to submergence.

It is generally desirable to have the supports at the same elevation, although the necessity for clearance over a railroad, highway, or electric power line along one side of the river, or the desirability for greater ease of operation on the near side, may be sufficient reason for a difference in elevation.

In the design of a cableway structure, different factors of safety may be used for its several parts, as the uncertainties will vary with the nature of the material and the methods of its fabrication, the conditions of loading, and in some instances, with the physical conditions at the site 3/. The parts of the structure for which individual designs

---

3/ Information regarding the factor of safety in engineering design may be found in the paper by Freudenthal and the subsequent discussions. See Freudenthal, Alfred M., The Safety of Structures: ASCE Proc., October 1945; discussions in Proceedings for January, February, and June, 1946, and February 1947.

are necessary are (1) the wire rope or strand, commonly called the "cable," (2) the supports, which are usually A-frames or towers, (3) the anchorages, usually imbedded in the ground, (4) footings for the supports, (5) anchorage connections, and (6) backlines, stays, and guys. Various accessories may require special consideration in the design to such an extent that standard plans can be used only to a limited degree. If the river is classed as "navigable," the Corps of Engineers, U. S. Army, may establish certain requirements as to clearance for which information, as well as the necessary permit, should be obtained through the officer in charge of the local district. The permit from the War Department usually specifies compliance with requirements issued in accordance with law by any department of the Federal Government for the aid or protection of aerial navigation (see p.33). These requirements should be ascertained in advance, as far as possible, and observed in the design of the structure.

Measurement of the span

Some of the preliminary studies, such as the investigations of the relative economies of different spans and the corresponding heights of the supports, may be based on approximate measurements of the span but a careful determination of the distance between supports and the distance from each support to the corresponding anchorage connection should be made before beginning the final computations. For short spans, the distance between supports may be measured with steel tapes or a tag line, but for spans of several hundred feet the distance should be determined by triangulation from a carefully measured base line, one end of which should be at the site selected for one end of the span. The base line should be approximately as long as the span and all three angles of the triangle should be measured. If socket connections are to be used, the measurements of the base line and the angles should be sufficiently exact so that the length of span may be computed with a reasonable degree of accuracy.

As an error in determination of the span produces an error in the length of the wire rope or track strand as purchased, and this error must be compensated by take-up adjustments in order to obtain the desired sag, it follows that an uncertainty in the measurement of the span necessitates provision for a greater take-up than otherwise would be required. With the instruments that ordinarily are available for measurements of angles and distances it should be possible to determine the span with an allowable error not exceeding 1 in 2,000.

Loads

In any structural design, the anticipated loads are given primary consideration and the structure should be designed to carry those loads with a reasonable factor of safety. If there is large uncertainty in regard to the loads, a large factor of safety beyond that incident to uncertainty in the strength of the material is needed. However, the maximum load on a cableway when it is in use for current-meter measurements can be determined very closely. Loads caused by falling trees

or other objects striking the wire rope or strand may be in excess of those assumed in the design, but those loads are not likely to occur when the cableway is in use. There is no record of a Geological Survey cableway having failed under the loads for which it was designed. Such failures as have occurred because of falling trees or from other causes when the cableway was not in use generally have been at the anchorage connections or have been due to upsetting of the supports.

The loads to be considered in the design of cableway structures are (1) the dead-load weight of the wire rope or strand, which may be the decisive or limiting load for long spans, (2) the concentrated load carried by the gaging car or produced by tension on the meter cable attached to the car, and (3) loads caused by wind and ice. The weights per foot for various sizes of galvanized plow-steel 6 x 7 wire rope* and galvanized smooth-coil round-wire tramway track strand that may be used in cableway design are given in tables 1 and 2.

The concentrated load that is carried by the gaging car on two traveller sheaves** consists of the weight of the car and the equipment and possibly two men, the sum of which ordinarily may be taken as 500 pounds; also the pull that may be exerted by the current-meter suspension cable. The breaking strength of the 0.10-inch reverse-lay cable that is commonly used with reels is from 800 to 1,000 pounds. The breaking strength of the 0.125-inch reverse-lay cable which is used with 200-pound and 300-pound weights is about 1,500 pounds. A concentrated load of 1,500 pounds applied at the point of maximum sag is commonly used in design except in those instances where it is expected that the 0.125-inch meter cable will be used or additional heavy equipment will be carried on the gaging car. In those cases, the design should be made for a concentrated load of 2,000 pounds or whatever amount will include the weight to be carried plus the breaking strength of the meter cable.

Wind load should be considered in the design of towers, guy cables, and footings, especially if the span is long. The possible effect of ice covering should also be investigated if the structure is in a region subject to freezing temperatures. In the design of the cableway structures for the station on the Columbia River at Trinidad, Wash., the effects of wind load and ice covering were investigated as stated by Arthur Johnson in his report 4/:

> Two conditions were investigated; first, with the wind normal to the cable, and second, with the wind 45 degrees from normal. In considering the wind stress, the cable and all members of the tower were considered as having a coating of ice extending 1/4 inch beyond each edge, or a total increase of 1/2 inch in width (N.E.L.A. class B loading); a 3/4-inch cable supported two feet above the main cable

---

* Add about 7 percent to the weight given for 6 x 7 wire rope to obtain the weight for a corresponding size of 6 x 19 wire rope.

** For the spacing of the sheaves see plates 21, 22, 23, and 24.

4/ Unpublished report entitled "Construction of a gaging station on Columbia River at Trinidad, Wash." by Arthur Johnson, assistant engineer, May 1931.

Table 1. -- Weight per foot, net cross-sectional area, and breaking strength of galvanized plow-steel 6 x 7 wire rope*

Diameter	Approximate weight per foot	Net area of cross section	Breaking strength (with deduction of 10 percent for effect of galvanizing)		
			Improved plow steel	Plow steel	Mild plow steel
Inches	Pounds	Square inches	Pounds	Pounds	Pounds
3/4	0.84	0.215	40,800	35,600	30,900
7/8	1.15	.294	55,200	48,000	41,700
1	1.50	.380	71,400	62,100	54,000
1 1/8	1.90	.484	89,600	77,900	67,800
1 1/4	2.34	.596	109,800	95,400	83,000

Table 2. -- Weight per foot, net cross-sectional area, and breaking strength of smooth-coil round-wire galvanized tramway track strand.

Diameter	Wires in strand	Approximate weight per foot	Net area of cross section	Breaking strength (with deduction of 10 percent for effect of galvanizing)	
				Extra high strength	High strength
Inches	Number	Pounds	Square inches	Pounds	Pounds
3/4	19	1.24	0.301	58,500	49,700
7/8	19	1.69	.438	79,900	67,700
1	19	2.20	.576	104,400	88,600
1 1/8	37	2.70	.723	127,300	108,000
1 1/4	37	3.23	.897	152,300	129,200
1 3/8	37	4.01	1.081	189,000	159,800
1 1/2	37	4.88	1.292	229,500	195,100

* For 6 x 19 wire rope the weight is about 7 percent greater and the breaking strength is about 5 percent greater than that of the 6 x 7 wire rope.
NOTE. -- The values of breaking strength and weight in table 1 are those given by the National Bureau of Standards: Wire Rope, Simplified Practice Recommendation R198--43, page 1, table 1.

The breaking strength and weight per foot of tramway track strand have not been officially standardized. The values given in table 2 are those generally used. In ordering tramway track strand of a given diameter, the required minimum breaking strength should be specified.

was also considered. Such a cable will probably be required at some future date for supporting lights and streamers to mark the obstruction to aerial navigation. A wind pressure of 8 pounds per square foot on projected area of cables and 20 pounds per square foot on twice the projected area of the tower was used. The wind normal to the cable gave the greatest overturning force or uplift on the footings and the wind 45 degrees from normal gave the greatest compression on the footings. Although side guys were used, the footings were designed to resist uplift due to wind pressure. Consequently, in this design the wind load normal to the cable was used when considering uplift and 45 degrees from normal when considering compression.

Types of construction

Various types of construction are used in cableways and the appurtenant structures. For long spans, high towers may be required similar to those shown in the photograph of the cableway across the Columbia River (see pl. 1) for which the designs are given in plates 12 and 13.

Steel or timber A-frames may be used as supports for cableways across streams of ordinary size where the span is not too great and the height of the support is less than about 40 feet. Designs for steel A-frames of various heights are shown in plates 14 to 18. Designs for timber A-frames are shown in plate 20.

The steel post support that is shown in plate 19 has been found very satisfactory. It is simple in design and ordinarily the steel can be readily obtained. An H-beam support 27 feet in height for a cableway of about 700-foot span has been designed and used in the Boston district.

In some instances where the use is expected to be temporary, wire rope is carried by sheaves supported by trees, the end connection being made to a suitable anchorage or to the lower part of another tree. If trees are used, either for supports or anchorages, four or more blocks should be placed between the wire rope and the bark of the tree to protect the tree from injury that might cause the failure of the support or anchorage. The use of trees as cableway supports is not recommended, except as a temporary expedient until more permanent structures can be erected.

Anchorages may be constructed of mass concrete whereby the weight of the concrete and the soil resistance to movement are the principal factors in the security of the anchorage, or they may be of the T-beam type, suitably reinforced, with most of the load carried by the resistance of the soil in direct compression. The latter type is more economical of concrete but the forms are more expensive than those required for the mass type of construction.

In places where the river banks contain ledgerock of sufficient height, anchorage rods set in the rock are sometimes used. Owing to uncertainties as to its strength and reliability, this type of anchorage it is not recommended.

In some circumstances, where timber is plentiful and the cost of concrete is prohibitive, the use of a timber deadman as an anchorage for a short span may be acceptable. If timber is used, it should be an unsawed log with the bark removed. A wire-rope connection between the turnbuckle and the log should be provided with bearing plates between the rope and the log and at least three turns of the wire rope around the log and the bearing plates.

In all cases where a rigid connection is made to an anchorage by means of an anchor bolt, care should be taken that the anchor bolt is set in a direct line and in the same plane with the connecting back stay or backline of the wire rope or strand so that there will be no bending moment in the rod.

Wire rope and its connections, or the connections for any type of construction, should not be exposed to contact with the ground. If below the surface, suitable waterproofing should be applied. A wrapping of burlap covered with asphaltum is sometimes used.

Two different types of material, with respect to the methods of their fabrication, are used in the tracks of cableways. These are (1) wire rope and (2) tramway track strand. Because of the difference in their flexibility, due to their design and methods of fabrication, different methods of connection to the anchorages are customary.

Although the physical properties and tensile strengths of these two types of material differ, certain general practices and procedures in connection with their use are common to both types. It is considered good practice to use a size at least 3/4 inch in diameter, even for short spans, as the greater ease in operation of the gaging car with the smaller sag required for the 3/4 -inch size, instead of a smaller size, will more than compensate for the small additional cost. Another reason for specifying a minimum diameter of 3/4 inch for the cableway track is that the smaller sizes would require the use of small wires that would be more vulnerable to abrasion and atmospheric corrosion.

Wire rope

The wire rope that is used for cableways consists of several individual strands, usually six, each of which is composed of a number of wires. The number of wires in a strand of this type is generally 7, 19, or 37, although others are obtainable. A strand of 7 wires has been commonly used in cableways for river measurements, but a 19-wire strand is often preferred because of the greater flexibility and somewhat greater strength of the rope with that method of fabrication. However, the smaller size of the wires in a 19-wire strand as compared with a 7-wire strand renders the 19-wire strand more vulnerable to abrasion and corrosion.

A rope with a hemp core is ordinarily used and is so understood in the designation of "wire rope" unless a different core is specified or is required by the method of fabrication. It is preferable that the

hemp core should not be lubricated, but a wire rope with a dry core is not always obtainable. A wire rope has the advantage of flexibility and is adapted to the use of thimble-and-clip connections to the turnbuckles and anchorages. For these reasons and because of its general availability, simplicity of connections, and ease of erection, hemp-center wire rope is often used in cableways of short and medium span. The thimble-and-clip connections are the greatest sources of weakness in this type of construction.

Various other types of wire ropes are available, among which are ropes with wire centers. These may be either independent wire-rope centers or wire-strand centers. This type of rope has the advantage of somewhat greater strength and is subject to less uncertainty in stretch and elongation than is the hemp-center rope.

6 x 7 wire rope

Wire ropes composed of 6 strands around a hemp core with 7 wires in a strand are commonly known as transmission or haulage ropes, but have sometimes been listed as "yacht rigging rope" by wire rope companies.

As the wires are relatively large in the 6 x 7 type of fabrication, the rope is well qualified to withstand abrasion but it is less flexible than some other types of wire rope. Because of its general availability, the 6 x 7 wire rope has been often used in short-span cableways. The weight per foot, net cross-sectional area, and breaking strength of ordinary sizes of different grades of galvanized plow-steel 6 x 7 wire rope are given in table 1.

6 x 19 wire rope

Several different designs of 6 x 19 wire rope are available, all of which are generally listed under the heading of hoisting rope. They differ in flexibility and other properties with the various methods of fabrication, but the so-called "Standard Hoisting Rope" is more generally used than any of the others. In this design there are 6 smaller intermediate wires in addition to the 19 main wires. As the 6 x 19 wire rope has a breaking strength about 5 percent greater than that of the 6 x 7 wire rope, with a weight per foot about 7 percent greater, if it is given a sag corresponding to that shown in the diagrams in plate 2 the factor of safety for ordinary spans will be slightly greater than that of the 6 x 7 wire rope with the same sag except that its greater vulnerability to abrasion and corrosion may have an adverse effect. Its modulus of elasticity is somewhat lower than that of the 6 x 7 wire rope.

Tramway track strand

Tramway track strand, because of its greater smoothness of operation, greater strength and reliability, higher modulus of elasticity and less sag, is generally preferred for river cableways, even though the span may be within the limits of use of ordinary sizes of wire rope. The stiffness

and lack of flexibility of tramway track strand, as compared with wire rope, necessitates the use of socket connections. (See p.29). This type of connection facilitates erection of the cableway but it requires careful measurements of lengths in order to avoid the necessity for an excessive length of take-up at the sockets. (See p.30). The weight per foot, net cross-sectional area, and breaking strength of ordinary sizes of smooth-coil, round-wire, galvanized tramway track strand are given in table 2. As track strand has not been as fully standardized as wire rope, the suppliers of that material should be invited to furnish a listing of its characteristics.

Grades of steel

Plow steel that is generally specified for cableways is an acid open-hearth steel so treated and drawn as to yield a wire unexcelled in uniformity, strength, and toughness. The three standard grades of plow steel that are used in the fabrication of wire ropes where strength, toughness, and resistance to abrasion are of primary importance are "Improved Plow Steel," "Plow Steel," and "Mild Plow Steel." 5/. Of these three, Improved Plow Steel is the strongest, toughest, and most wear resistant. The use of Mild Plow Steel is limited to installations requiring high fatigue resistance where strength is not of primary importance. The grade designated as Plow Steel is intermediate between Improved Plow Steel and Mild Plow Steel; the difference in strength between each grade is approximately 15 percent. Smooth coil tramway track strand is fabricated only from two grades of steel which are now designated as "Extra High Strength" and "High Strength." The comparative strengths of the two grades are shown in table 2.

A grade of steel that has a higher unit strength than those mentioned above is sometimes used in suspension bridges of short and medium span, and for guys to towers, masts, stacks, and similar structures where high strength is the principal consideration. Bridge strand, which is made of that grade of steel, is not recommended for use in cableways because of its unusually long lay and its resultant vulnerability to wire displacement.

Fatigue due to vibration

Engineers experienced in the design and use of tramway track-strand structures have found that failure of wires in the strand may occasionally occur at the entrance to the socket if the socket is at the end of a long free span and is not free to rotate. These failures have been attributed to rapid changes in the angle of the strand where it enters the socket, such as may be caused by variations in the conditions of loading or by vibrations induced by wind or other causes. If the socket is not free to rotate, the flexure of the strand at the mouth of the socket may cause

---

5/ See N. B. S. Wire Rope, Simplified Practice Recommendation R198--43. Various trade names are used by the different manufacturers in their designations of these grades of steel.

fatigue failure of some of the wires. A standard open socket presumably is free to rotate because of its pin connection but, if the pin is attached to a rigid anchorage or tower top, the bearing pressure produced by the tension may prevent rotation. Therefore, with open sockets, it is desirable to introduce a link between the socket and the fixed anchorage. If vibration is noticeable, such as might be caused by the passage of trains near the cableway support or anchorage, it may be alleviated by the use of Stockbridge dampers. The failure of an eye-bolt connection that was attributed to fatigue induced by vibration in a cableway across the Yakima River has been described as follows 6/:

> The bolt was rigidly anchored in rock and had been in service for about 15 years. The cableway equipment had been used repeatedly for making high-water measurements, when the strain on the meter-suspension cable was great, and with two engineers in the gaging car. Only one engineer was in the car when the bolt broke, and the river was at medium stage, so that the strain on the meter-suspension cable was slight. Examination of the fracture seemed to indicate progressive failure due to fatigue.....
>
> Fatigue of tramway strand may not occur, or if it does occur the process is undoubtedly slower than in an eye-bolt. Even so, undue vibration is disconcerting, and cableway measuring equipment at many gaging stations may be in service for 50 years or more.

Computations

The following formulas are based on the principles of mechanics and are similar to those commonly used by wire-rope companies. The supports are assumed to be at the same elevation unless otherwise stated. In the formulas for length and slope, it is assumed that the wire rope or strand takes the form of a parabolic arc instead of the catenary. This assumption greatly simplifies the computations and the error in results is negligible.

Formulas

W = weight of the wire rope or strand per foot of length.

P = concentrated load at center of span or at point of maximum sag.

S = clear span between supports.

H = horizontal component of the tension,

= tension at the point of maximum sag.

$$= \frac{W S^2}{8 D} + \frac{P S}{4 D} = \frac{S(W S + 2 P)}{8 D} \quad \ldots\ldots\ldots\ldots\ldots\ldots \quad (1)$$

6/ Unpublished report by engineers in the Tacoma district, February 1935.

Correspondingly, for the individual loads W and P:

$$H_W = \frac{W S^2}{8 D_W}, \text{ and } H_p = \frac{P S}{4 D_p} \quad \ldots\ldots\ldots\ldots \quad (1a)$$

$$D = \text{loaded sag} = \frac{S(W S + 2 P)}{8 H} \quad \ldots\ldots\ldots\ldots \quad (2)$$

d = erection sag; to be computed.

$$T = \text{maximum tension} = H \sec \beta \quad \ldots\ldots\ldots\ldots \quad (3)$$

β = angle between the horizontal and the tangent to the curve at the support.

$$\tan \beta \text{, for loads W and P, } = \frac{2(D + 4 Q)}{S} \quad \ldots\ldots\ldots\ldots \quad (4)$$

where Q is the sag in the half span from the chord joining a support and the load at midspan. The equation that is generally used for $\tan \beta$ is:

$$\tan \beta = \frac{W S + P}{2 H} \quad \ldots\ldots\ldots\ldots \quad (4a)$$

L = length along the catenary (or parabolic arcs) between supports.

For load W (weight per foot) the following approximate formulas are used:

$$L_W = S + \frac{W^2 S^3}{24 H_W^2} = S(1 + \frac{W^2 S^2}{24 H_W^2}) = S(1 + \frac{8 D_W^2}{3 S^2}) \quad \ldots\ldots \quad (5)$$

where D_W is the sag corresponding to the tension H_W for the load W.

Formula (5) is commonly used as:

$$L_W = S(1 + \frac{8}{3} k^2) \quad \ldots\ldots\ldots\ldots \quad (5a)$$

where k is the ratio of the sag to the span for the load W. The derivation of equation (5) and also an exact formula for the computation of the length are given by Steinman 7/.

An approximate formula that gives the erection length L_e for a level span sufficiently close for practical purposes is:

$$L_e = 2 \sqrt{(\frac{S}{2})^2 + \frac{4}{3} d^2} \quad \ldots\ldots\ldots\ldots \quad (5b)$$

7/ Steinman, D. B., A practical treatise on suspension bridges, 2d ed., p. 5. 1929.

By formula (5b) the length of the parabola for a span of 1,000 feet and a sag of 45.0 feet is 1,005.39 feet, whereas it is 1,005.40 feet by formula (5a).

With a load P at the center of the span, the length may be computed by the formula:

$$L = 2\left[S_1 + \frac{W^2\left(\frac{S}{2}\right)^3 \cos^3\theta}{24H^2}\right] \quad \ldots\ldots\ldots\ldots\ldots \quad (6)$$

where S_1 is the chord length from the center of span to the support and is the angle that the chord makes with the horizontal.

L_1 = length along the catenary (or parabolic arcs) plus the sum of the distances from the supports to the anchorage connections. (See eq. (9)).

The above relations do not take into consideration the elasticity of the material or the small changes in arrangement of the component parts of the rope or strand that may result in permanent stretch when load is applied. The sag diagrams in plates 2 and 3 show the loaded sag D corresponding to the allowable tension T for a safety factor of 4 for improved plow-steel tramway track strand and a safety factor of 5 for improved plow-steel wire rope.

Elongation under load

From preliminary computations or by the use of diagrams, a wire rope or strand of a certain size and strength may be selected and the corresponding values of D and T determined from equations (1), (2), (3), and (4). The results of those computations may indicate that a change should be made in the selection. After satisfactory trial values have been obtained, the elastic elongation due to load and the change in length due to temperature changes can be computed.

The elongation due to the loads W and P may be computed from the equation:

$$e = \frac{T\,L}{A\,E}, \text{ or } e = \frac{H\,L}{A\,E} \text{ for tension H} \quad \ldots\ldots\ldots \quad (7)$$

If the support is hinged at the base or is otherwise nonrigid in position, L_1 should be used for the length. Some engineers prefer to use the formula:

$$e = \frac{H\,L^2}{S\,A\,E} \quad \ldots\ldots\ldots\ldots\ldots\ldots\ldots\ldots \quad (7a)$$

In equation (7), and likewise in equations (8) and (9), the area A is the sum of the net cross-sectional areas of the several individual wires that compose the rope or strand. The values of A given in the tables published by the various wire-rope companies may differ slightly for the same nominal diameter of the rope or strand.

As new wire ropes and, to a lesser degree, tramway track strand are subject to small changes in the positions of their component parts

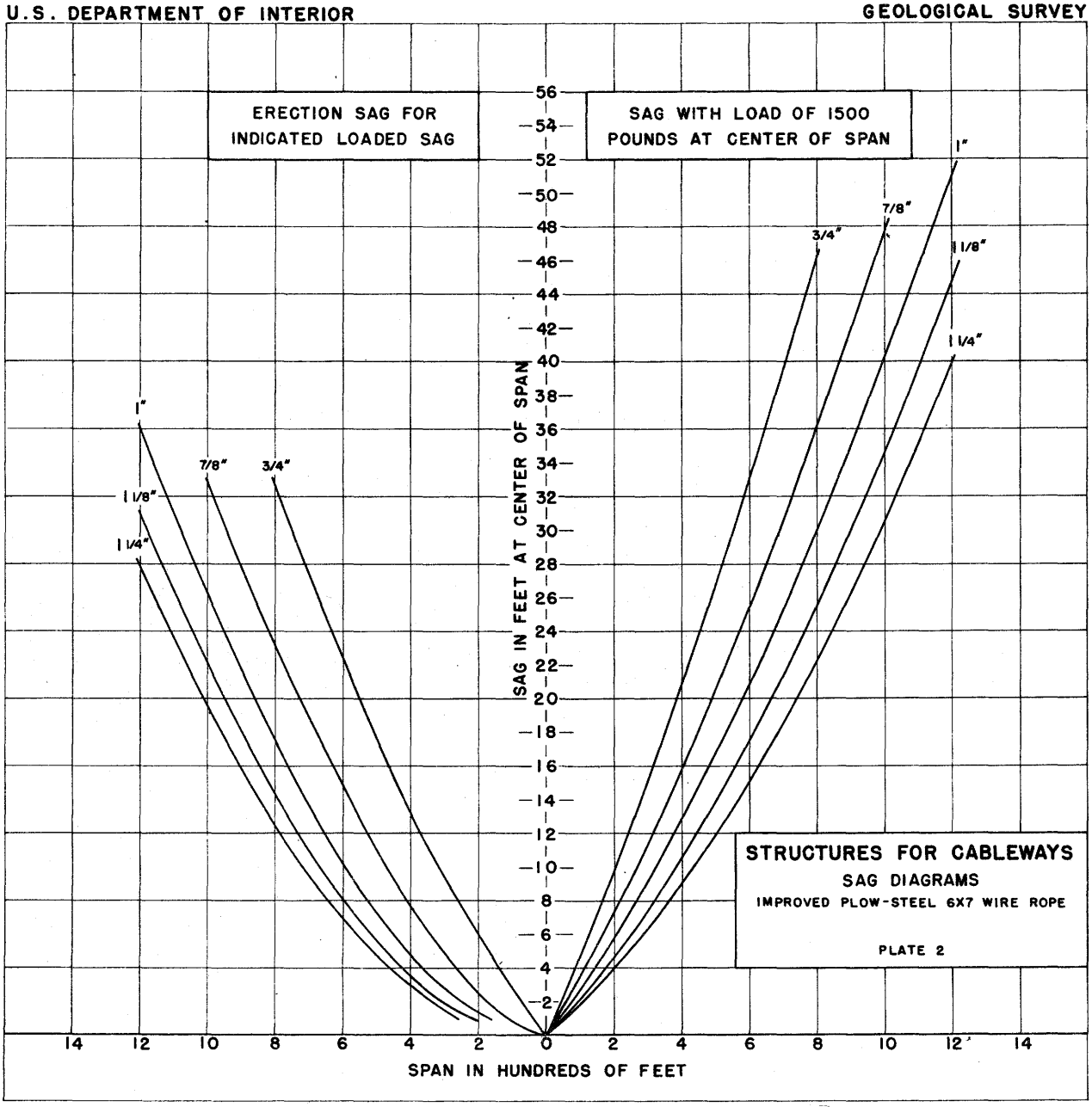

STRUCTURES FOR CABLEWAYS

SAG DIAGRAMS

IMPROVED PLOW-STEEL 6X7 WIRE ROPE

PLATE 2

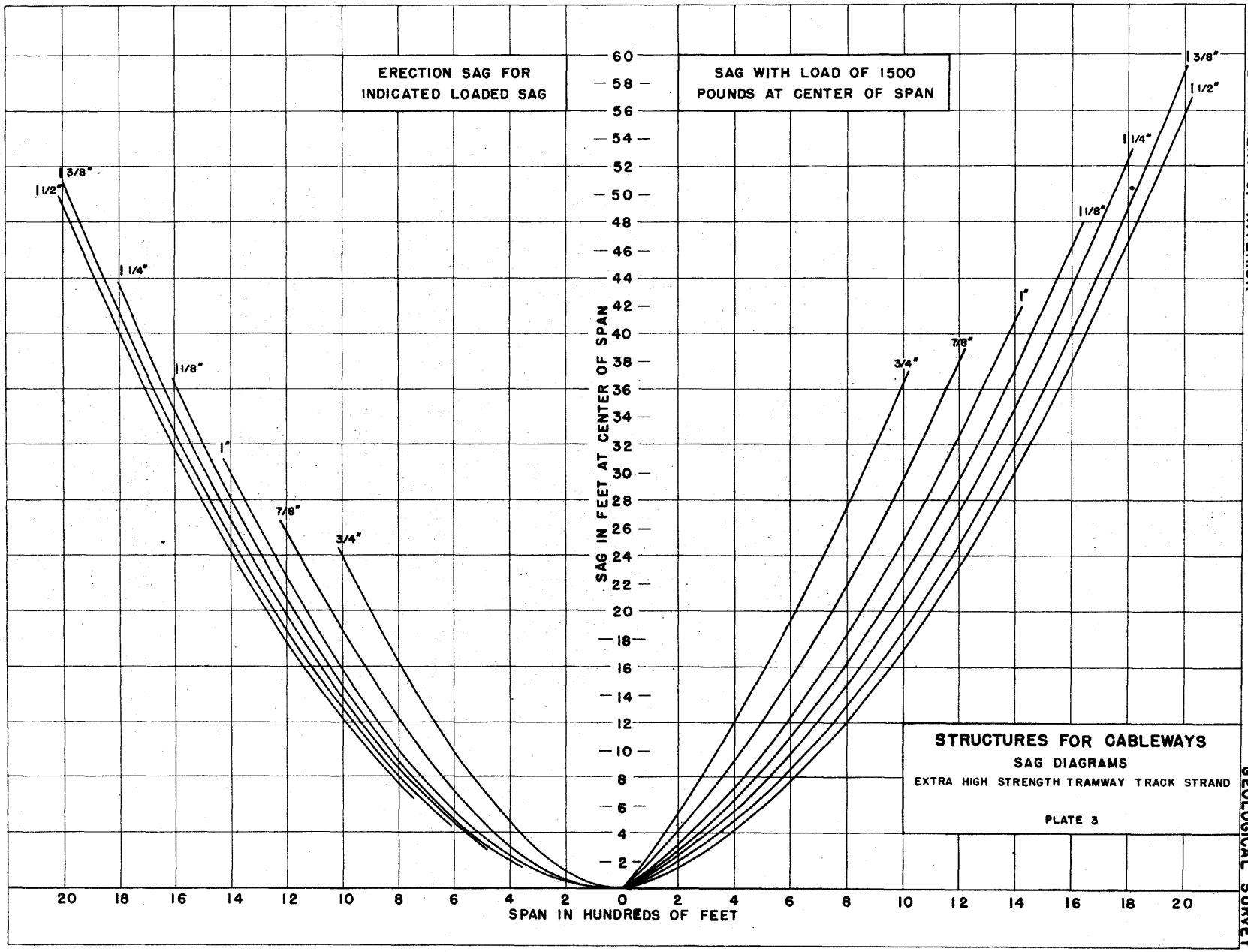

U.S. DEPARTMENT OF INTERIOR

GEOLOGICAL SURVEY

when the loads are first applied and these changes result in what may be called "permanent stretch," the final adjustment of take-up to give the desired erection sag should be postponed until heavy loads have been applied and removed. For wire ropes with turnbuckles, the turnbuckles may be tightened beyond the designed position and then slackened off to the position that gives the correct sag. It may be desirable to make an allowance for the permanent stretch when placing the turnbuckles or bridge sockets, unless the material has been subject to previous use or to a prestressing process.

The permanent stretch will vary with the kind of material and the nature of its construction and is greater for wire rope than for tramway track strand. Wire rope may be expected to have a stretch anywhere from 0.5 percent to 1.0 percent of its length, depending upon the method of fabrication and the conditions of loading. For light loads, such as the operation loads on cableways used for river measurements, an allowance of 0.005 times the length may be sufficient. This elongation is additional to the elastic elongation shown in equation (7).

A prestressing process that is offered by some wire rope companies is desirable for tramway track strand as, by the prestressing process, a permanent stretch is given the strand and the modulus of elasticity is stabilized for working tensions that do not exceed the prestressing tension. It should be noted that the effects of prestressing diminish rapidly for tensions above that of the prestressing. For this reason, it is common practice to prestress tramway track strand to 50 percent of its ultimate strength in order that there may be a liberal margin to the prestressing effects. The length of time in which the prestressing should be maintained varies with the material, but for tramway track strand one hour should be sufficient.

Although prestressing of hemp-center wire rope for the purpose of stabilizing its modulus of elasticity is not generally practiced by wire rope companies, the prestressing would be helpful in giving the rope a permanent stretch and thereby eliminate some of the uncertainties as to the loaded sag under operating conditions. For the prestressing of wire rope to be effective, it should be maintained for at least four hours at a tension of 40 percent of the ultimate strength of the rope.

The factory measurement of length (see p.24) should be made under a tension equal to that in the cableway when its erection sag is adjusted to the erection sag specified in the design. The length would then correspond to the length of the catenary at the time of erection. The erection tension H_W may be found from equation (1a) where D_W is the erection sag d that may be found from equation (8) or by the methods described on pages 17 to 20.

Modulus of elasticity

As may be seen from equation (7), the elongation e varies inversely with the modulus of elasticity E. Values of E for galvanized tramway track strand may differ as much as 15 percent, depending on the condition

COMPUTATION OF ERECTION SAG FOR EXTRA HIGH STRENGTH TRAMWAY TRACK STRAND

U.S. DEPARTMENT OF INTERIOR — GEOLOGICAL SURVEY

	Diam.	A	W	H	AE	S	$8\left[\frac{AE+H}{3S}\right]$	$\frac{WS}{3}$	$\frac{WS^3}{8}$	D	$4D^2$	S^2	$\frac{W^2S^4}{96H^2}$	$\sqrt{4D^2+S^2}$	Columns $\frac{(11)+(12)+(13)}{(14)}$	Columns $(5)\left[(15)-S\right]$	SH	Columns (16)-(17)	Equation (8) transposed* $Col.(7)\times d^2 - Col.(8)\times d - Col.(9)\times\frac{1}{d} - Col.(18) = 0$	d
Column Nos. E = 22,000,000	(1)	(2)	(3)	(4)	(5)	(6)	(7)	(8)	(9)	(10)	(11)	(12)	(13)	(14)	(15)	(16)	(17)	(18)*		(19)
	1 3/8"	1.081	4.01	46,900	23,782,000	400	158,859	535	32.08×10^6	4.91	96.4	160,000	1.957	400.1205	400.1254-	2,982,300	18,760,000	−15,777,700	$158{,}860\,d^2 - 535d - \frac{32.08\times10^6}{d} + 15{,}777{,}700 = 0$	1.96
						800	79,430	1,070	256.64×10^6	13.24	701.2	640,000	31.211	800.4381	800.4772-	11,348,700	37,520,000	−26,171,300	$79{,}430\,d^2 - 1{,}070d - \frac{256.64\times10^6}{d} + 26{,}171{,}300 = 0$	8.16
						1,200	52,953	1,604	866.16×10^6	24.98	2,496.0	1,440,000	157.905	1,201.0395	1,201.1711-	27,851,100	56,280,000	−28,428,900	$52{,}953\,d^2 - 1{,}604\,d - \frac{866.16\times10^6}{d} + 28{,}428{,}900 = 0$	18.57
						1,600	39,715	2,140	$2{,}053.12\times10^6$	40.15	6,448.1	2,560,000	499.389	1,602.0137	1,602.3255+	55,305,000	75,040,000	−19,735,000	$39{,}715\,d^2 - 2{,}140d - \frac{2{,}053.12\times10^6}{d} + 19{,}735{,}000 = 0$	32.9
						1,800	35,302	2,407	$2{,}923.29\times10^6$	49.02	9,611.8	3,240,000	799.728	1,802.6679	1,803.1116-	74,000,000	84,420,000	−10,420,000	$35{,}302\,d^2 - 2{,}407d - \frac{2{,}923.29\times10^6}{d} + 10{,}420{,}000 = 0$	41.35
T = 47,250 →						2,000	31,772	2,673	$4{,}010.0\times10^6$	58.74	13,801.6	4,000,000	1,218.252	2,003.4474	2,004.0555	96,448,000	93,800,000	+2,648,000	$31{,}772\,d^2 - 2{,}673d - \frac{4{,}010.0\times10^6}{d} - 2{,}648{,}000 = 0$	50.72
	1 1/2"	1.292	4.88	57,000	28,424,000	800	94,936	1,301	312.32×10^6	12.11	586.6	640,000	31.266	800.366	800.406	11,540,000	45,600,000	−34,060,000	$94{,}936\,d^2 - 1{,}301d - \frac{312.32\times10^6}{d} + 34{,}060{,}000 = 0$	7.81
						1,200	63,291	1,952	$1{,}054.08\times10^6$	23.30	2,171.6	1,440,000	158.323	1,200.904	1,201.037	29,475,700	68,400,000	−38,924,300	$63{,}291\,d^2 - 1{,}952d - \frac{1{,}054.08\times10^6}{d} + 38{,}924{,}300 = 0$	17.8
						1,600	47,468	2,602	$2{,}498.56\times10^6$	37.92	5,751.7	2,560,000	500.248	1,601.796	1,602.109	59,946,300	91,200,000	−31,253,700	$47{,}468\,d^2 - 2{,}602d - \frac{2{,}498.6\times10^6}{d} + 31{,}253{,}700 = 0$	31.7
						1,800	42,194	2,928	$3{,}557.52\times10^6$	46.52	8,656.5	3,240,000	801.508	1,802.403	1,802.848	80,951,500	102,600,000	−21,648,500	$42{,}194\,d^2 - 2{,}928d - \frac{3{,}557.5\times10^6}{d} + 21{,}648{,}500 = 0$	40.0
T = 57,400 →						2,000	37,975	3,254	$4{,}880\times10^6$	55.97	12,530.5	4,000,000	1,221.88	2,003.130	2,000.740	106,306,000	114,000,000	−7,694,000	$37{,}975\,d^2 - 3{,}254d - \frac{4{,}880\times10^6}{d} + 7{,}694{,}000 = 0$	49.15

Equation (8): $$8\left(\frac{AE+H}{3S}\right)d^2 - \left(\frac{WS}{3}\right)d - \frac{WS^3}{8d} = AE\left[\left(\frac{4D^2+S^2+\frac{W^2S^4}{96H^2}}{\sqrt{4D^2+S^2}}\right) - S\right] - SH$$

* Col. (18) is the right-hand member of Equation (8).

STRUCTURES FOR CABLEWAYS

COMPUTATION OF ERECTION SAG

EXTRA HIGH STRENGTH TRAMWAY TRACK STRAND

PLATE 4

of the strand, and for wire rope the variation in E may be as much as 20 percent. Values of E ranging from 19,000,000 to 22,000,000 for tramway track strand and from 12,000,000 to 14,000,000 for 6 x 7 wire rope have been used in design. Because of the uncertainties, engineers of wire rope companies generally favor the lower values.

It should be noted that the erection sag d for a specific loaded sag D increases somewhat with an increase in the assumed value of the modulus of elasticity. The difference in the erection sag d due to the use of 22,000,000 instead of 20,000,000 for E in the computations for spans of 1,200 and 2,000 feet, using 1 3/8 -inch and 1 1/2 -inch extra high strength tramway track strand, is shown in table 3. A value of 22,000,000 was used in the computations for plates 3 and 4 in the 1933 edition of "Structures from which discharge measurements are made" 8/ and also in the computations for plates 3 and 4 of this edition.

Table 3. --Erection sag d required for a specific loaded sag D for E = 20,000,000 and 22,000,000. Extra high strength tramway track strand with safety factor of 4.

Size of strand	Span	Loaded sag D	Modulus of elasticity E 20,000,000	22,000,000	Difference in d
Inches	Feet	Feet	Feet	Feet	Feet
7/8	800	22.0	11.9	12.3	0.4
1 3/8	1,200	25.0	18.4	18.6	.2
	2,000	58.7	50.5	50.7	.2
1 1/2	1,200	23.3	17.7	17.8	.1
	2,000	56.0	48.8	49.1	.3

Erection sag

The erection sag d that should be given a wire rope or strand in order that the loaded sag D and the maximum tension T may not exceed the limitations of the given specifications can be determined by means of formulas representing the several factors that must be considered. For convenience in systematizing computations in the preparation of sag diagrams, the relations between the various forces and dimensions that produce static equilibrium in the loaded cableway may be represented by the following equation:

$$8\left(\frac{A\,E + H}{3\,S}\right)d^2 - \left(\frac{W\,S}{3}\right)d - \frac{W\,S^3}{8\,d} = A\,E\left[\left(\frac{4\,D^2 + S^2 + \frac{W^2\,S^4}{96\,H^2}}{\sqrt{4\,D^2 + S^2}}\right) - S\right] - S\,H \quad \ldots(8)$$

8/ Computations by C. H. Pierce, S. K. Jackson, and L. L. Harrold, July 1933.

In equation (8) the fraction on the right hand side of the equation represents the length of a parabolic curve with the dead weight W S replaced by W S sec ϕ to obtain a closer approximation of the effect of the total weight in the length L. As expressed in this form, the equation may not be as familiar to many engineers as are the equations containing trigonometric terms. In this equation, which is used after H and D have been determined, the only unknown quantity is the erection sag d. The fundamental relations in equation (8) are similar to those in equation (8a).

The diagrams in plates 2 and 3 that show the erection sag d for a specific loaded sag D were prepared by use of the above equation (8). The grouping of constants in the coefficients of d^2, d, and d^{-1} in the manner shown in plate 4 simplifies the work in making a series of computations. The solution is then made by substitution of trial values of d until a value is found that satisfies the equation. Plate 4 shows the computations for the erection sag d for 1 3/8-inch and 1 1/2-inch extra high strength tramway track strand that are plotted in plate 3. It should be noted that the values given in these computations and diagrams correspond to the length between supports. The effective length L_1 would, of course, depend upon conditions at the site.

Sag diagrams are useful in preliminary computations, and values taken from them are often used in designs for short and medium-span cableways. However, for spans of 1,000 feet and more, the computations should be made for the specific problem under consideration with proper allowance for the backlines and guys.

Formulas developed by Carstarphen 9/ have been applied to cableway computations with results in close agreement with those obtained by the use of equation (8).

In the application of the theory of elasticity to cableway problems, the erection sag d may be found by first determining the erection tension H_e that satisfies the equation for elasticity stability expressed in the form:

$$L - L_e = \frac{(H - H_e)\,L}{A\,E} = J\,(H - H_e) \quad \ldots\ldots\ldots\ldots \quad (8a)$$

After finding the value of H_e that satisfies the above equation, the erection sag d can be determined from the equation $d = \frac{W\,S^2}{8\,H_e}$.

In the above nomenclature, J is the elastic change in length for each pound of change in tension and L_e is the length corresponding to the erection tension H_e.

9/ Carstarphen, F. C., Aerial tramways: ASCE Trans., vol. 92, p. 875.

As $L_e = S + \frac{W^2 S^3}{24 H_e^2}$, the elastic relation may be expressed as

$$J H_e + L - (J H + S) - \frac{W^2 S^3}{24 H_e^2} = 0 \quad \ldots\ldots\ldots\ldots \quad (8b)$$

L is a maximum when the load P is at the center of the span and for that condition:

$$L = 2 \left[S_1 + \frac{W^2 \left(\frac{S}{2} \right)^3 \cos^3 \theta}{24 H^2} \right] \quad \ldots\ldots\ldots\ldots \quad (6)$$

The above equation is for a level span where S_1 is the chord length from the center of span to the support and θ is the angle that the chord makes with the horizontal.

An application of this method to a 1 1/2 -inch tramway track strand with a clear span of 1,800 feet, assuming that the supports are rigid and fixed in fixed in position, is as follows:

P = 1,500 pounds.

W = 4.88 pounds per foot.

A = 1.292 square inches.

D = 46.52 feet.

H = 57,000 pounds.

E = 22,000,000.

$$S_1 = \sqrt{\left(\frac{S}{2} \right)^2 + D^2} = 901.201 \text{ feet.}$$

$$\cos \theta = \frac{S}{2S_1} = \frac{1,800}{1,802.402}$$

$$= 0.99866; \quad \cos^3 \theta = 0.9960$$

$$L = 2 \left[901.201 + \frac{(4.88)^2 \ (900)^3 \ (0.996)}{24 \ (57,000)^2} \right]$$

$$= 2 \left[901.201 + 0.222 \right] = 1802.846 \text{ feet.}$$

$$J = \frac{L}{AE} = \frac{1,802.846}{1.292 \times 22,000,000} = 0.000,063,43$$

$$JH = 0.000,063,43 \times 57,000 = 3.6155$$

$$\frac{W^2 S^3}{24} = 5,786,900,000$$

Substitution of the above values in equation for elastic stability (8b) gives the following equation for H_e :

$$0.000,063,43\ H_e^3 - 0.770\ H_e^2 - 5,786,900,000 = 0$$

The solution of this equation gives a value of H_e , to the nearest 10 pounds, as 49,450 pounds.

The corresponding value of the erection sag d is

$$d = \frac{WS^2}{8H_e} = 40.0 \text{ feet (to the nearest tenth of a foot),}$$

which is the same as was obtained by the use of equation (8). (See plate 4).

In the determination of the erection sag where the conditions are known, the length L_1 should be used in place of L in the formulas for elasticity. (See eq. 7) The stresses in the backlines for the angle γ should also be investigated. (See page 21).

The formulas given below are used by some engineers. They are somewhat simpler than those given on pages 17-18, and give results sufficiently exact for most cases.

$$\Delta L = \frac{H_p S}{A E} \left(1 + \frac{16}{3} k^2\right)$$

$$\Delta D = \frac{15 \quad L}{16(5k - 24k^3)}$$

$$d = D - \Delta D$$

A solution of the above problem, using the data given on page 18, is as follows:

$$H_p = \frac{1,500 \times 1,800}{4 \times 46.52} = 14,510 \text{ lbs.}$$

$$k = \frac{D}{S} = \frac{46.52}{1,800} = 0.02584$$

$$k^2 = 0.000,668$$

$$k^3 = 0.000,017$$

$$\Delta L = \frac{14{,}510 \times 1{,}800}{1.292 \times 22{,}000{,}000} (1.0036) = 0.922 \text{ foot}$$

$$\Delta D = \frac{15 \times 0.922}{16\ (0.129{,}2 - 0.000{,}4)} = 6.71 \text{ feet}$$

$$d = 46.52 - 6.71 = 39.81 \text{ feet}$$

which is about 0.2 foot less than was obtained by the first two methods.

The value of ΔD may also be found directly from the equation:

$$\Delta D = \frac{15\ PS^2\ (1 + \left(\frac{16}{3}\right) k^2)}{64\ DAE\ (5k - 24k^3)}$$

$$= \frac{73{,}162{,}440{,}000}{10{,}899{,}867{,}440} = 6.71 \text{ feet}$$

As the elongation under load cannot be exactly determined mathematically because of the "permanent stretch" of the rope or strand that is mentioned on page 15, and some uncertainty in regard to the value of E, a choice of the above methods of computing the erection sag may be made without any appreciable difference in accuracy. The smaller erection sag that is obtained by the last described method might be considered as providing some allowance for the permanent stretch, although the larger sag obtained by the first two methods would give a larger factor of safety.

Supports at different elevations

As it is sometimes necessary or desirable for the supports to be at different elevations (see p. 4), the following additional terms and formulas are given for use in those circumstances.

h = difference in elevation of supports, in feet.

D_1 = total deflection at low point from the elevation of the highest support.

$$= \frac{S(W\ S + 2\ P)}{8\ H_1} + \frac{h}{2}$$

$$H_1 = \frac{S(W\ S + 2\ P)}{8\ D_1 - 4\ h}$$

β_1 = angle between the horizontal and the tangent to the curve at the highest support.

β_2 = angle between the horizontal and the tangent to the curve at the lowest support.

$$\tan \beta_1 = \frac{W S + P}{2 H_1} + \frac{h}{S}$$

$$\tan \beta_2 = \frac{W S + P}{2 H_1} - \frac{h}{S}$$

$T_1 = H_1 \sec \beta_1 =$ maximum tension at highest support.

$T_2 = H_1 \sec \beta_2 =$ maximum tension at lowest support.

A mathematical treatment of the condition of supports at different elevations from which the above equations may be derived has been given by Carstarphen 10/.

An approximate method for the solution of cableway problems where the supports are at different elevations has been published by Pittman 11/.

Tension in backlines

The total tension in the backlines from the support to the anchorage is H sec where is the angle between the backline and the horizontal. This load should be investigated and back guys provided for insuring the stability of the support and for taking the excess load so that the tension in the rope or strand between the support and the anchorage will not exceed the allowable tension T in the main span.

Where pin-and-socket connections are used at the supports, as indicated in the plans for steel A-frames (pls. 14 to 18), a larger-size strand may be used for the backline so that the factor of safety will not be reduced.

Bending moment in towers and A-frames

Because of the conditions of loading at the supports and the difference in the angles β and γ, a bending moment may be developed in the supports. These stresses may be investigated by graphical methods and the best position for a back guy selected. The stresses due to wind load should also be investigated (see p. 6).

The computations up to this point do not take in consideration the effect of changes in temperature as that subject can be treated more satisfactorily as a separate problem.

Effect of changes in temperature

The change in length of a cableway and the corresponding change in sag due to change in temperature should be considered after completing

---

10/ Carstarphen, F. C., op. cit., p. 917.
11/ Pittman, Harrison V., Construction cableways on Norfolk Dam. Engr. News-Record, December 27, 1945, p. 67.

the provisional computations of length and sag. The immediate effect of a change in temperature, say from a temperature of 0 degrees F to a temperature of 100 degrees F, would be a change in length (ΔL) of ϵ Lt where ϵ is the temperature coefficient and t is the change in degrees F, so that there would be a tendency for the wire rope or strand to assume a new length that differed from the previous length by ϵ Lt. If the cableway was free to take this new length under its own weight, a rise of 100 degrees in temperature and a value of 0.000,006,6 12/ for ϵ would change a length of 800.51 feet along the catenary to a length of 801.04 feet. However, with the increase in the length and the resulting increase in the sag, there would be a decrease in tension that would tend to limit the change in length and would affect the sag accordingly.

From the theory of elasticity and the formulas for length and sag of cableways, an equation for Δd, the change in the sag d due to a change in temperature, was developed by the writer and was used by him in the computations for the diagrams shown in plate 5 of the 1933 edition of "Structures from which discharge measurements are made." For convenience in the computations, the equation was arranged to show the following relations:

$$\frac{8d}{3S}(\Delta d)^3 + \frac{8d^2}{S}(\Delta d)^2 + \left[-L\epsilon td + \frac{16\,d^3}{3\,S} + \frac{WS^2L}{8\,AE}\right]\Delta d - L\epsilon td^2 = 0 \ldots (9)$$

The application of equation (9) to a definite set of conditions is shown in the solution of the following problem, using a safety factor of 4.

Assume that a 7/8 -inch improved plow-steel tramway track strand has been selected for use at a clear span of 800 feet. The supports are to be at the same elevation and hinged at the base. The backlines from the tops of the supports to the anchorages have a total length of 100 feet. The data are as follows:

S = 800 feet.

W = 1.69 pounds per foot.

P = 1,500 pounds.

A = 0.438 square inch.

T = 20,000 pounds; H = 19,800 pounds.

D = 22.00 feet by equation (2).

d = 12.36 feet by equation (8).

$k = \frac{12.36}{800} = 0.0154$ for the strand under its own weight.

12/ This value was used in computations for plate 5 of the 1933 pamphlet. A value of = 0.000,006,89 for wire rope is used by some engineers.

$$L_e = 800 \left[1 + \frac{8}{3} (0.0154)^2 \right] \text{ by equation (5a).}$$

$$= 800.51 \text{ feet for } d = 12.36 \text{ feet.}$$

$L_1 = 800.51 + 100 = 900.51$ feet. Use L_1 for L in equation (9).

$E = 22{,}000{,}000.$

The procedure to be followed in the solution of equation (9) for the above conditions is as follows:

First, determine the value of $L \epsilon td^2$ and the constants that are the coefficients of the terms containing the first, second, and third powers of Δd.

$$0.0412 (\Delta d)^3 + 1.528 (\Delta d)^2 + 18.032 (\Delta d) - 90.797 = 0$$

Next, ascertain by trial the value of Δd that will satisfy the equation.

Try $\Delta d = 4$:

$2.64 + 24.45 + 72.13 - 90.80 = 8.42$; therefore, 4 is too large.

Try $\Delta d = 3.6$:

$1.92 + 19.80 + 64.92 - 90.80 = -4.16$; therefore, 3.6 is too small.

Try $\Delta d = 3.74$:

$2.16 + 21.38 + 67.43 - 90.80 = 0.17$; this is very close.

Try $\Delta d = 3.73$:

$2.138 + 21.239 + 67.259 - 90.797 = -0.161.$

Therefore, the value of Δd is between 3.73 and 3.74.

- - - - - - - - - - -

Another method of determining the change in sag due to a change in temperature has been described by Barnes 13/. Using the same problem and data given above, the method of solution makes use of two terms, a and b, that may be described as follows:

a = change in length due to change in temperature alone, the tension being considered constant, $= L \epsilon t$ . . . . . (10)

13/ Barnes, B. S., assistant engineer, Portland district, "Solution of three problems in cable design." Unpublished manuscript (1935).

b = change in length due to change in tension alone; (a and b are opposed in direction, but will be treated as positive quantities),

$$= \frac{\Delta H L}{A E} \quad \ldots\ldots\ldots\ldots\ldots\ldots\ldots\ldots \quad (11)$$

Assume that $\Delta L_1 = \Delta L = a - b$, and compute a by equation (10).

From formula (5b) for the length of the arc of a parabola:

$$L = \sqrt{S^2 + (16/3)\ d^2} \quad \text{and } d = \sqrt{(3/16)\ (L^2 - S^2)} \ldots\ldots \quad (12)$$

For the above problem, a = 900.51 x 0.000,66 = 0.59 foot change in length due to the change in temperature alone.

$\Delta L = 0.59 - b$; assume a value for b and substitute the assumed value of $L + \Delta L$ for L in equation (12) to find a new d; call this d_1.

Compute H_w by equation (1a). Substitute the value of d_1 for D_w in equation (1a) to obtain H_1 ; then $b = (H_w - H_1)\ L/AE$ by equation (11). If this equation is satisfied by the assumed value of b, the difference between d and d_1 is the change in the sag due to the change in temperature. Continue the use of trial values of b until a value is found that satisfies the equation. After several values have been tried in the above problem:

Try b = 0.237: then $\Delta L = 0.59 - 0.237 = 0.353$;

$$L + \Delta L = 800.51 + 0.353 = 800.863;$$

$$d_1 = \sqrt{(3/16)\left[(800.863)^2 - (800)^2\right]} = \sqrt{259.04} = 16.10$$

$$H_1 = \frac{1,081,600}{8 \times 16.10} = 8,400.$$

$$b = \frac{(10,940 - 8,400)\ 900.51}{9,636,000} = 0.237 \text{ as assumed.}$$

Therefore, the change in sag (Δ d) due to a change of 100 degrees in temperature as computed by this method is 16.10 - 12.36 = 3.74 feet, which is practically the same as was obtained by the method first described.

Measurement of length

In the factory measurement of length corresponding to a specified tension (see p.15) and a specified temperature the procedure followed by some wire rope companies is as follows:

If the specified temperature coincides with the temperature at which the tape is calibrated, the specified tension is applied and the specified length is measured directly, assuming that the wire rope or strand will have equal changes in temperature under surrounding atmospheric conditions. If

a different temperature is specified, a new length is computed in order to change the specified length to the length corresponding to the temperature at which the tape is calibrated and the measurement is then made as above.

It is customary to design the cableway for the lowest temperature that is likely to occur at the site and to compute the corresponding Δd for the temperature at the time of erection. The tension and temperature at which the required length is to be measured should be specified in the order to the manufacturer. In designing the supports, allowance should be made for a sag corresponding to the temperature specified in the requirement for clearance above low water if the stream is navigable and under the jurisdiction of the War Department.

Factors of safety

The factor of safety of a cableway structure, including that of the wire rope or tramway track strand, and the supports, footings, anchorages, and anchorage connections, should be large enough to provide ample protection against any unsuspected weakness of the material or possible working loads in excess of those used in the design. Because of the differences in the materials and methods of construction of the several component parts, it is logical to decide upon the individual factor of safety that should be allowed for each part after consideration of the uncertainties that may affect the material and loads applicable to that part.

With proper design and construction, the uncertainties affecting concrete anchorages and footings can be so reduced that a relatively small factor of safety beyond those ordinarily used in determining the allowable working stresses of the concrete and the steel reinforcement is needed. It is customary to design anchorages and footings for twice the working loads that may be anticipated, but with very favorable conditions where allowable bearing pressures and frictional resistances of the soil are known, the ratio of the design load to the working load may be taken as 1.5.

A-frames and towers that are constructed of galvanized light-weight structural shapes should be designed for twice the expected working loads and the allowable tensile stress used in the design should not exceed 16,000 pounds per square inch, although higher values are commonly used in the designs for heavy steel construction. The l/r ratio for columns and struts should not exceed 120 for main compression members and 200 for bracing and other secondary members.

As may be seen from the weights listed in table 2, for the sizes of strand required for spans greater than 1,000 feet the weight of the strand between supports exceeds the concentrated load. Equation (1) shows that the relative importance of the dead load in its effect on the design increases rapidly with the increase in span and size of strand

The practical limitation to the size of strand that can be economically used has been graphically demonstrated by various Survey engineers 14/ who have called attention to the economic advantages to be gained in cableway construction, especially for long spans, by the use of a safety factor of four for tramway track strand with socketed connections instead of five as formerly specified. As is stated in that article, one purpose of a factor of safety is to insure against failure due to indeterminate live loads. If the design is carefully made, and the loads and stresses are properly analyzed, there would seem to be little uncertainty beyond that incident to the material and its fabrication.

Engineering practice, as shown by the literature on the subject and the experience of Survey engineers, indicates that the use of one-fifth the breaking strength of galvanized improved plow-steel wire rope and one-fourth the breaking strength of galvanized tramway track strand as the maximum allowable tension T, after an allowance of 10 percent in each case for the effect of galvanizing, provides a reasonable factor of safety for the wire rope or strand if due consideration is given to all the forces acting on the structure.

Anchorage connections provided by the wire-rope companies as accessories with orders for wire rope or tramway track strand are intended to be able to develop the full strength of the rope or strand. However, as experience has shown that those connections are the places of greatest weakness in the structure, it is recommended that sockets, eyebars, turnbuckles, and anchorage rods be designed for a working load at least 20 percent greater than the allowable working load of the wire rope or strand to which the connection is made.

Specifications

In preparing specifications for cableway design and construction, consideration should be given to the conditions of the installation as well as to the loads and the nature of the material. If it is expected that the cableway will be continued in use as a permanent installation, as is the expectation for the installations on the Columbia River previously mentioned, it is a matter of business economy to see that every possible precaution is taken to obtain the best possible design consistent with good engineering practice and that the construction meets minimum standards in every respect. On the other hand, if the conditions warrant only a temporary installation, or if the region is remote from transportation facilities so that the costs of first-class construction will be prohibitive, it may be allowable to design structures of a less permanent nature with a view to replacement after a few years if a need for their continued use is then apparent. However, it is well known that a gaging station intended as temporary may continue in use for many years if it is found that a long-time record of stream flow at that place is needed.

14/ Engineers in the Portland and Tacoma districts, unpublished manuscript (1934).

Under no circumstances should the expected temporary nature of the installation or its remoteness from transportation facilities be considered as justification for a design or construction that will not be safe for the users of the cableway. The safety of the engineer working in a remote place is of even greater importance than his safety when working near a much-travelled highway, and he should be fully as safe on a temporary installation as he is on an installation designed for long-time use.

Anchorage connections

Anchorage connections include the sockets, eyebars, turnbuckles, rods, and pins that transmit the tension from the wire rope or strand to the fixed anchorage. As previously mentioned (page 9), the difference in the physical properties of wire rope and tramway track strand suggest the use of different methods of connection to the anchorages, these methods are the thimble-and-clip connection for wire rope and the socket connection for tramway track strand. The socket connections that are required for the track strand may likewise be used for wire rope.

No welds should be permitted on any parts of eyebars, anchorage rods, turnbuckles, or the take-up bars of sockets. The specifications should require that each of the individual parts that enter into the finished product, such as the eye and bar of a turnbuckle, shall be forged in one piece. Although welded connections may be made that will develop the full strength of the bar or rod, positive assurance is not readily available as to the efficiency of an individual weld. The required minimum breaking strength of the finished eyebar or anchorage rod should be specified by the purchaser.

Field experience has shown that particular care is necessary in the selection of material for anchorage connections and in the heat treatment incident to their fabrication. For spans of unusual length where the eyebars, rods, and other connections are to be forged to meet specific requirements the following procedures are applicable:

1. The specifications should call for a steel suitable for forging and of a known origin for which physical and chemical analyses are available. Its composition should be similar to S. A. E. 1040 or to that used for bridge eyebars as described by Bain and Llewellyn 15/.

2. In case of doubt as to the quality of the steel that is offered, physical and chemical tests of specimens taken from the bars should be required.

15/ Bain, E. C., and Llewellyn, F. T., Low-alloy structural steels: ASCE Trans., vol. 102, pp. 1240 - 1256.

3. After completion of all forging operations, that portion of the bar which has been forged should be relieved of internal stresses due to heating and shaping by reheating to about 1,600 degrees F. and allowing it to cool slowly in air.

4. If the fabricated bar or assembly is to be permanently subjected to the full load of the cableway, it should be given a tension test under a load that is twice the maximum design load.

Thimble-and-clip connections.

The connections between the wire rope and the turnbuckles and between the turnbuckles and the anchorages for the sizes of wire rope commonly used for cableways are generally made by means of thimbles and clips; the size of thimble and number of clips that should be used for various sizes of wire rope are listed in the catalogues of wire rope companies for the types of clip furnished by them. The number of clips for each rope end should be at least five for 3/4 -inch diameter rope with a minimum spacing of 5 inches between clips and six for 1 -inch diameter rope with a minimum spacing of 6 1/2 inches. The precautions that should be observed in making a thimble-and-clip connections are as follows:

1. Before cutting a wire rope wind both sides of the contemplated cut with wire to prevent the strands from separating or the individual wires from spraying loose.

2. Always use a thimble of the proper size in the loop of the rope except when the rope is carried around a bar or rod of a diameter equal to or greater than the size of a thimble.

3. Place the free end of the rope a distance from the center of the loop as determined by the number of clips and the required spacing and fasten the thimble in its proper positions in the loop with temporary wiring.

4. With the thimble held in position, slip it over the free end of a bar or rod and bend the loop into place around the thimble, then add additional temporary wiring around the loop at the open end of the thimble.

5. Have the desired number of clips at hand ready to apply. The first clip to be placed is that farthest from the loop. This clip should be about six inches from the end of the rope and should be turned up tight when it is first put on. The threads in the bolts and nuts should be oiled before the clips are applied. (Some engineers prefer to apply the clip nearest the loop first, in place of the temporary wiring).

6. The clip nearest the loop should be put on next. This clip should be four inches from the thimble and should be only partially tightened at first.

7. Add the additional clip or clips so that they will be equally spaced at the specified minimum distance apart between the first two. Before completely tightening the second and the subsequent clips place some stress upon the rope to take up the slack and equalize the tension on all the clips.

8. Tighten the nuts on all the clips uniformly, alternating with a few turns on each until all are tight.

9. Clips should be put on straight, without twist or crookedness, and in true alinement. It is important that the "live" or long rope rest upon the broad bearing surface of the base of the clip with the U-bolt bearing against the "dead" or short end of the rope. All of the clips should be applied in this way.

10. After the load has been applied the nuts should be tested and possibly tightened again, as the adjustment of the strands under load may change their position slightly. The tests should be repeated from time to time after the cableway has been put into use.

The thimble-and-clip connection is easy to make and is constantly exposed to view where it is subject to easy inspection, but its efficiency may be only 85 percent or less 16/. Two turnbuckles that were tested for the Geological Survey at the Bureau of Standards in 1915 both broke at less than the specified minimum breaking strength, the ratio of the actual to the specified breaking strength being 82 percent for the 1-inch turnbuckle and 91 percent for the 1 1/2 -inch turnbuckle. If the wire rope is one inch or larger in diameter, the socket connection would be preferable.

Sockets

Connection sockets for use on tramway track strand are of four kinds: (1) open sockets without take-up, (2) closed sockets without take-up, (3) open bridge sockets, and (4) closed bridge sockets. For the connections of the main span and the backlines to the pins at the tops of steel A-frames having hinge-pin connections at the base, sockets without take-up are preferable. Those on the main span should be closed sockets and those on the upper ends of the backlines should be open sockets. Bridge sockets with the specified take-up should be used at the anchorages, open bridge sockets generally being preferred although their cost is somewhat greater than the cost of closed bridge sockets. The possibility of fatigue due to vibration at socket connections has been mentioned on page 11.

As the lengths are measured to the outer faces of the sockets when they are assembled at the factory, an allowance should be made for the distances from the faces of the sockets to the connection pins when specifying the length to be purchased. The dimensions of standard sockets are given in catalogues of the wire rope companies.

16/ Committee on Rules and Regulations for Metal Mines, Bureau of Mines Bulletin 75, p. 121, 1st ed. 1915.

The factory installation of sockets is recommended and is generally specified, although it has been found by laboratory tests that, with the proper tools and correct methods of procedure, field installations of sockets can be made that will develop the full strength of the strand 17/. Emphasis should be placed on the necessity for correct procedure in the field installation of sockets, especially in the method of seizing the ends of the strand and in pouring the zinc spelter. These methods are described in the catalogues of the various wire rope manufacturers and elsewhere 18/. Field installation of sockets should be attempted only by those having the proper equipment and experience in such work. This is especially important in the case of tramway track strand where the bonding area between the wires and the zinc spelter is less than it is for the larger number of smaller-size wires in wire rope.

Take-up at socket connections

A liberal allowance should be made in the take-up at each socket connection so that any necessary adjustment can be made to obtain the correct sag or to allow for a small inaccuracy in length. An unexpected amount of stretch in the wire rope or strand may require a corresponding take-up. If there is some uncertainty in the measurement of the span the erection should be made at one-half of the total take-up after which the sag can be adjusted as desired. For a span of 1,000 feet, a take-up of 48 inches at each anchorage connection is not unusual. A careful measurement of the span, as mentioned on page 5, will assist in the determination of the length to be specified.

The eye-bars for open bridge sockets and U-bars for closed bridge sockets ordinarily listed by the wire rope companies may not have as much take-up as is desired for the cableway installation, therefore, it may be necessary to order special eye-bars or U-bars. Those orders should specify that the eye-bars or U-bars with a specified take-up are to be forged in one piece, without welding.

The hole in the head of the eye-bar should be 1/32 inch larger than the pin of the open bridge socket.

Galvanizing

Galvanized wire rope and strand have the individual wires protected by a coating of commercially-pure zinc. The specifications should require all tramway track strand, wire rope, or other material used in cableways, guys, or anchorage connections, and also all sockets, pins, bolts, eye-bars, U-bars, and turnbuckles to be galvanized by the hot-dip process. The galvanizing to consist of a continuous coating of commercially-pure zinc of uniform thickness applied so that it adheres firmly to the surface of the individual wires, pins, or bars. The coating to be of first-class commercial quality and free from injurious defects. It is to be non-peeling and non-cracking, and shall have sufficient toughness to resist weathering and corrosion.

17/ Unpublished report on "Field installation of sockets on tramway cables," by F. C. Ames. 1938.

18/ Committee on Rules and Regulations for Metal Mines, op. cit., p. 121.

Although the individual fittings, except for threaded connections, may be sufficiently protected by an occasional coat of paint, the long-time use of most cableway installations warrants a correspondingly-permanent method of protection.

Anchorages

Anchorages should be designed to safely withstand any and all loads that may be transmitted by the cableway connections. For purposes of design, these loads are commonly taken as twice the working loads of the cableway and the supporting structures and connections, although a lower ratio may be used for exceptionally good conditions (see p. 25). It should be noted that the load transmitted to the anchorage from the cableway is H sec γ where γ is the angle between the backline and the horizontal. If the wire rope or tramway track strand of the cableway is continuous over saddle supports and additional guys are used for the towers or A-frames, it may be found desirable to compute the individual loads and to design the anchorages on the basis of those computations. For long spans and high towers, wind and ice loads should be considered in the design of towers and footings (see "Loads," p. 5). Reinforced-concrete anchorages are recommended for all permanent installations.

Design

The following requirements should be observed in the design of reinforced-concrete anchorages.

1. Weight of concrete is taken as 150 pounds per cubic foot.

2. The strength of concrete in compression is assumed to be 2,000 pounds per square inch at 28 days. Allowable working stress, 500 pounds per square inch.

3. The coefficient of friction between concrete and earth may be safely assumed as 0.40 for ordinary soil but if the concrete rests on clay or shaley material, a smaller coefficient should be used. For medium to coarse gravel, a coefficient of 0.50 is allowable. The following statement is given by Hanna 19/:

> The coefficient of friction of concrete on masonry or masonry on rock generally varies from about 0.60 to 0.75, for concrete on concrete it is about 0.60 to 0.70, for concrete on gravel about 0.60, for concrete on sand about 0.40, and for concrete on clay or shale about 0.33. Adhesion of the concrete to bedrock, earth and rock above the plane of contact, and roughness of the foundation bringing shear into play greatly increases resistance to sliding.

19/ Hanna, Frank W., The Design of Dams, p. 1. 1931.

4. The U-bars should be embedded in the concrete for a distance not less than 30 times their diameter and should have 6-inch hooks at the ends.

5. Longitudinal and transverse reinforcement should be such as will properly transmit the loads into the anchorage.

6. The connection at the anchorage should be open to inspection and well drained.

7. The front face of concrete anchorages should be placed against undisturbed earth without backfill of any kind along this surface. This is especially necessary where the passive resistance of the earth in front of the concrete is considered in the design.

8. The U-bars should be set in the direct line to the cableway support so that there will be no bending moment at the anchorage connection.

Designs for reinforced-concrete anchorages that were originally prepared in the Columbus district office for use with tramway track strand cableways having a safety factor of five are shown in the following illustrations:

Plate 5. Anchorage for 3/4-inch cableway.

Plate 6. Anchorage for 7/8-inch cableway.

Plate 7. Anchorage for 1-inch cableway.

Plate 8. Sidehill anchorages.

In the above designs, an increase in the allowable working load in the tramway track strand corresponding to a factor of safety of four instead of five gives an increase in the horizontal soil pressure for maximum loads. Therefore, the ratio of the design load to the working load is somewhat less than two (see p. 25). If the anchorage is subject to submersion, a special design should be made.

A T-type anchorage that has a transverse crossbeam of reinforced concrete into which the load is transmitted by the U-bar connections that extend through a square concrete stem is more economical of material than those shown in the above designs, but the forms are more expensive. For the T-type anchorage, the top of the transverse crossbeam is placed about four feet below the ground surface or at a sufficient depth to obtain satisfactory bearing conditions. A design of a T-type anchorage for a 3/4 -inch extra high strength tramway track strand that has been used in the Tacoma district is shown in plate 9.

Unless otherwise specified, the design and construction of reinforced-concrete anchorages should be in accordance with "Recommended Practice and Standard Specifications for Concrete and Reinforced Concrete" as given in Proceedings ASCE, No. 6, Part 2, June 1940.

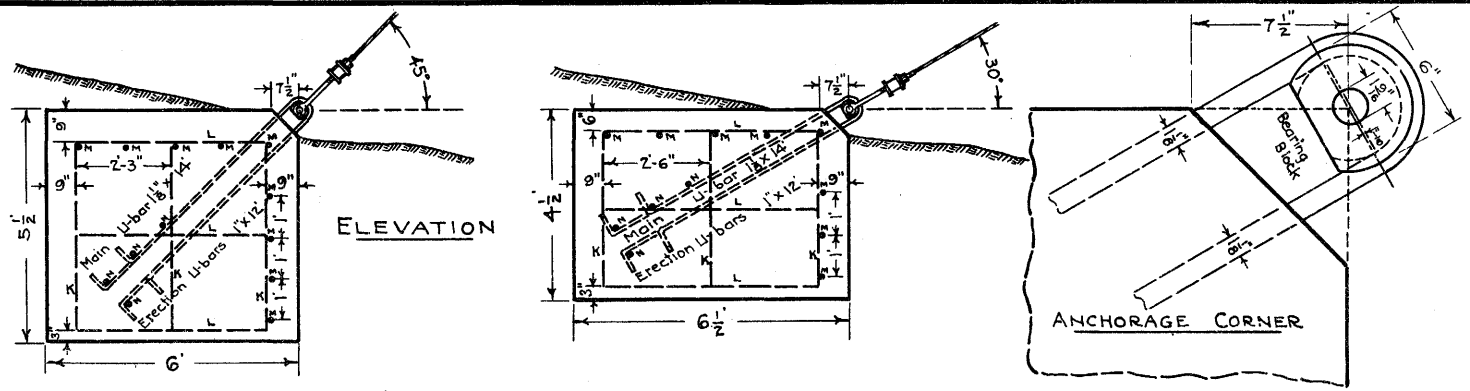

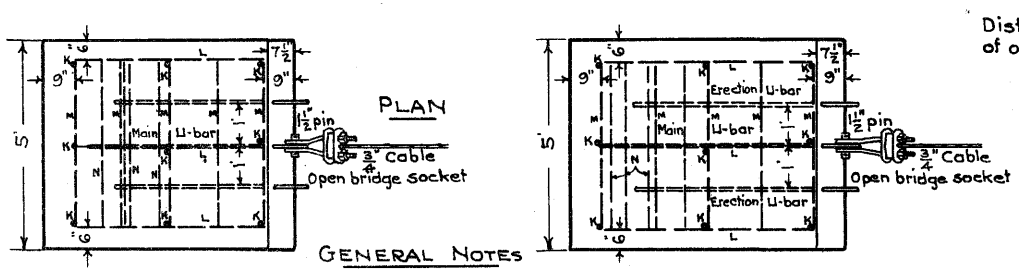

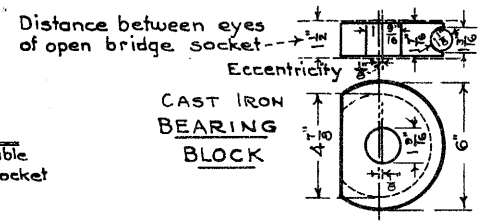

GENERAL NOTES

1. Coefficient of friction between concrete and earth assumed .40
2. Concrete strength assumed 2,000 lb/in² @ 28 days. Use of some clean local material is permissible if strength is not decreased.
3. Any open space, between vertical sides of anchor and adjacent earth, should be carefully filled and well tamped or puddled before load is applied.
4. Connection between cable and anchorage should be open to inspection and well drained.
5. Where soil conditions are poor use larger anchorage or bury anchor deeper.

DESIGN						CONSTRUCTION																	
CABLE				DESIGN LOADS Twice working loads for A-Frames, Cables & Anchorages								ANCHORAGE											
						MASONRY						STEEL											
												U-BARS						REINFORCEMENT					
Size	Direction	Main Cable Working Strength	Back Guy Working Load	Main Cable	Back Guy	Anchorages	Length	Width	Depth	Volume		Weight		Number	Size Dia	Size Length	Weight Each	Weight Total	Position	Symbol	Number	Size	Length Each	Length Total	Weight
		lbs.	lbs.	lbs.	lbs.	lbs.	ft.	ft.	ft.	ft³	yds³	lbs.			in	ft.	lbs	lbs.				in.	ft.	ft.	lbs.
																			Vert.	K	9	½φ	4½	40½	27
													Erection	2	1	12	32	64	Horiz.	L	9	½φ	4½	40½	27
¾"	45	11 700	16250	23 400	32 500	32 500	6'	5'	5½'	165	6⅛	24750	Main	1	1⅛	14	48	48	Horiz.	M	9	½φ	4	36	24
		Factor 5.0	Factor 3.6	Factor 2.5	Factor 1.8											Total		112	Horiz.	N	4	½φ	4	16	11
																						Total		133	89
																			Vert.	K	9	½φ	3½	31½	21
													Erection	2	1	12	32	64	Horiz.	L	9	½φ	5	45	30
¾"	80	11 700	13300	23 400	26 600	32 500	6½'	5'	4½'	146½	5½	21940	Main	1	1⅛	14	48	48	Horiz.	M	8	½φ	4	32	21
		Factor 5.0	Factor 4.4	Factor 2.5	Factor 2.2											Total		112	Horiz.	N	4	½φ	4	16	11
																						Total		124½	83

Factor of safety based on ultimate strength of aerial tramway track strand.

STRUCTURES FOR CABLEWAYS

ANCHORAGES FOR ¾-INCH CABLEWAY

Designed in Columbus District

PLATE 5

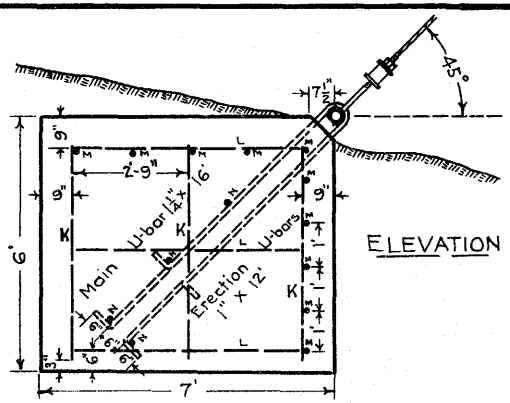

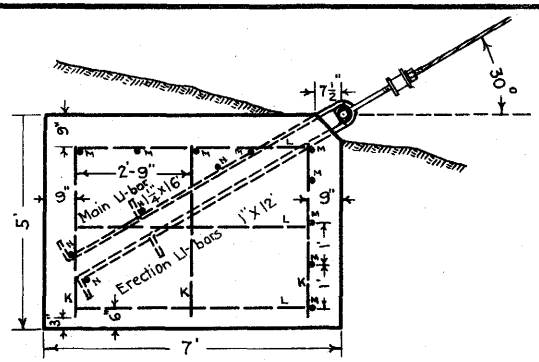

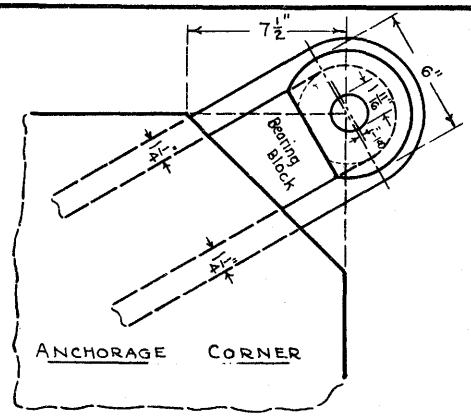

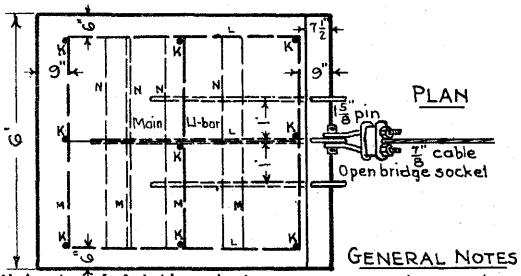

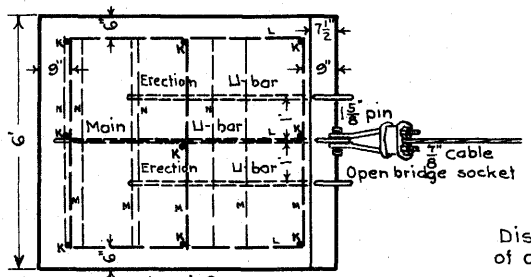

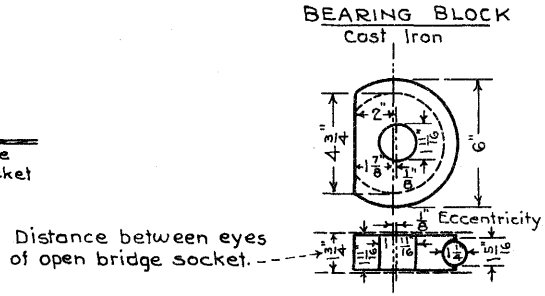

GENERAL NOTES

1. Coefficient of friction between concrete and earth assumed .40
2. Concrete strength assumed 2,000 lb/in² @ 28 days. Use of some clean local material is permissible if strength is not decreased.
3. Any open space, between vertical sides of anchor and adjacent earth, should be carefully filled and well tamped or puddled before load is applied.
4. Connection between cable and anchorage should be open to inspection and well drained.
5. Where soil conditions are poor use larger anchorage or bury anchor deeper.

DESIGN						CONSTRUCTION																		
CABLE				DESIGN LOADS Twice working loads for A-frames, Cables and Anchorages.		ANCHORAGE																		
						MASONRY							STEEL											
													U-BARS						REINFORCEMENT					
Size	Direction	Main Cable Working Strength	Back Guy Working Load	Main Cable	Back Guy	Anchorage	Length	Width	Depth	Volume		Weight	Use	Number	Size Dia.	Size Length	Weight Each	Weight Total	Position	Symbol	Number	Size	Length Each	Length Total	Weight
		lbs.	lbs.	lbs.	lbs.	lbs.	ft.	ft.	ft.	ft³	yds³	lbs.			in.	ft.	lbs.	lbs.				in	ft.	ft.	lbs.
																			Vert.	K	9	½ φ	5	45	30
													Main	1	1¼"	16	67	67	Horiz.	L	9	½ φ	5½	49½	33
⅞"	45	15,800	21,950	31,600	43,900	43,900	7	6	6	252	9⅓	37,800	Erection	2	1"	12	32	64	Horiz.	M	10	½ φ	5	50	34
		Factor 5.0	Factor 3.6	Factor 2.5	Factor 1.8												Total	131	Horiz.	N	4	½ φ	5	20	13
																							Total	164½	110
																			Vert.	K	9	½ φ	4	36	24
													Main	1	1¼"	16	67	67	Horiz.	L	9	½ φ	5½	49½	33
⅞"	30	15,800	17,450	31,600	34,900	34,900	7	6	5	210	7¾	31,500	Erection	2	1"	12	32	64	Horiz.	M	9	½ φ	5	45	30
		Factor 5.0	Factor 4.5	Factor 2.5	Factor 2.3												Total	131	Horiz.	N	4	½ φ	5	20	13
																							Total	150½	100

Factor of safety based on ultimate strength of aerial tramway track strand.

STRUCTURES FOR CABLEWAYS

ANCHORAGES FOR ⅞-INCH CABLEWAY

Designed in Columbus District

PLATE 6

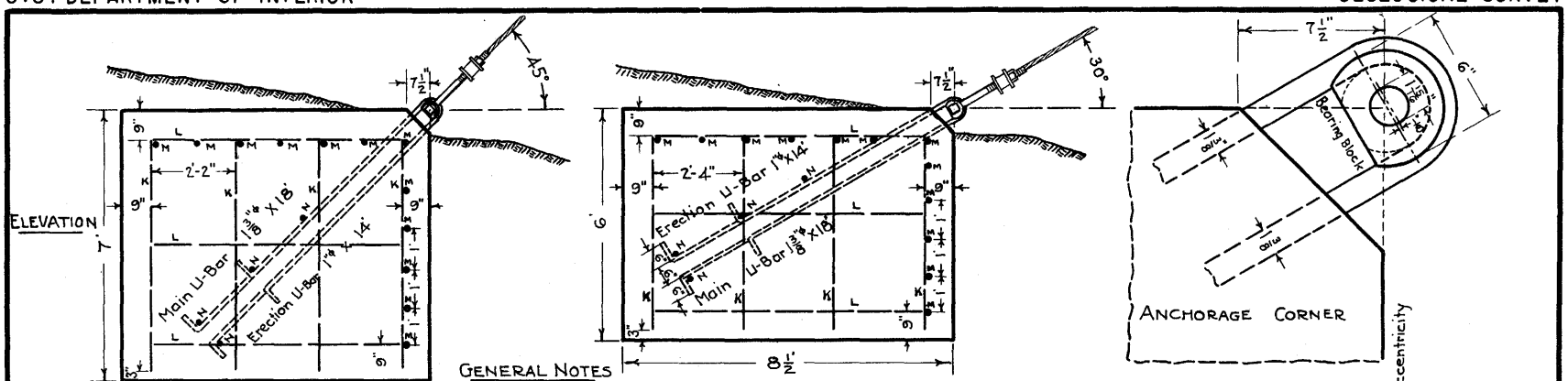

GENERAL NOTES

1. Coefficient of friction between concrete and earth, assumed .40
2. Concrete strength assumed 2000 lb/in² @ 28 days. Use of some clean local material is permissible if strength is not decreased.
3. Any open space, between vertical sides of anchor and adjacent earth, should be carefully filled and well tamped or puddled before load is applied.
4. Connection between cable and and anchorage should be open to inspection and well drained.
5. Where soil conditions are poor use larger anchorage or bury anchor deeper.

DESIGN						CONSTRUCTION																		
CABLE			DESIGN LOADS			ANCHORAGE																		
			Twice working loads for A-Frames, Cables and Anchorages			MASONRY						STEEL												
												U-BARS						REINFORCEMENT						
Size	Direction	Main Cable	Back Guy	Main Cable	Back Guy	Anchorage	Length	Width	Depth	Volume		Weight	Use	Number	Size		Weight		Position	Symbol	Number	Size	Length		Weight
		Working Strength	Working Load												Dia.	Length	Each	Total					Each	Total	
		lbs.	lbs.	lbs.	lbs.	lbs.	ft.	ft.	ft.	ft.³	yds.³	lbs.			in.	ft.	lbs.	lbs.				in.	ft.	ft.	lbs.
																			Vert.	K	12	1/2 φ	6	72	48
													Main	1	1 3/8	18	91	91	Horiz.	L	9	1/2 φ	6 1/2	58 1/2	39
1"	45	20,000	27,800	40,000	55,600	55,600	8	6 1/2	7	364	13 1/2	54,600	Erection	2	1"	14	37	74	Horiz.	M	12	1/2 φ	5 1/2	66	44
		Factor 5.0	Factor 3.6	Factor 2.5	Factor 1.8												Total	165	Horiz.	N	4	1/2 φ	5 1/2	22	15
																						Total		218 1/2	146
																			Vert.	K	12	1/2 φ	5	60	40
													Main	1	1 3/8	18	91	91	Horiz.	L	9	1/2 φ	7	63	42
1"	30	20,000	22,700	40,000	45,400	45,400	8 1/2	6	6	306	11 1/3	45,900	Erection	2	1	14	37	74	Horiz.	M	12	1/2 φ	5	60	40
		Factor 5.0	Factor 4.4	Factor 2.5	Factor 2.2												Total	165	Horiz.	N	4	1/2 φ	5	20	13
																							Total	203	135

Factor of Safety based on ultimate strength of aerial tramway track strand

STRUCTURES FOR CABLEWAYS

ANCHORAGES FOR 1-INCH CABLEWAY

Designed in Columbus District

PLATE 7

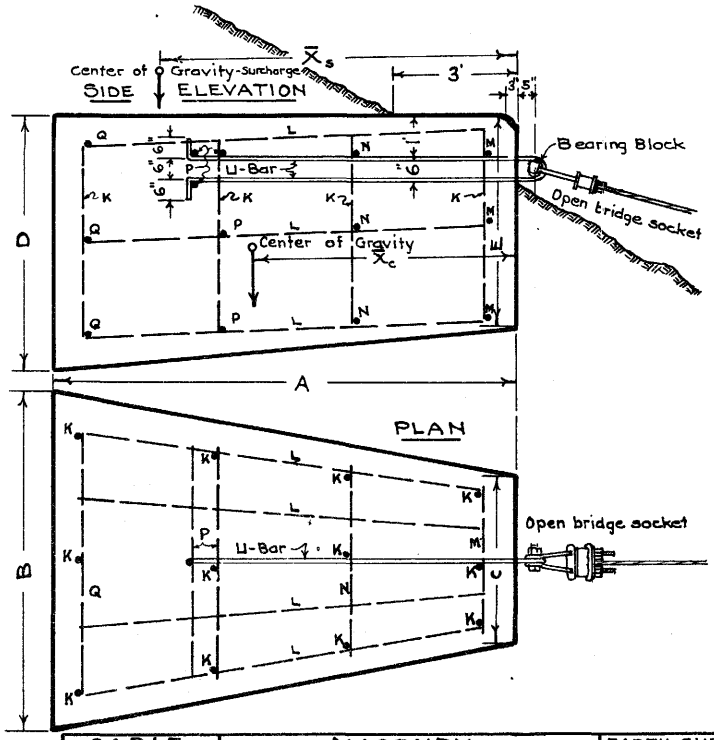

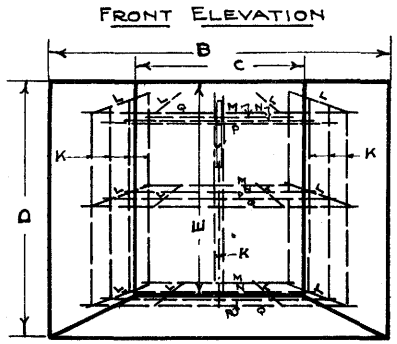

CABLE			MASONRY								EARTH SURCHARGE		
Size	Working Strength	Design Load	Dimensions					Volume		Distance to center of Gravity $\bar{X}_c$	Distance to Center of Gravity $\bar{X}_s$	Vol.	Weight
			A	B	C	D	E						
in	lbs.	lbs.	ft	ft	ft	ft	ft	cu. ft.	cu. yds	ft.	ft.	cu. ft.	lbs.
3/4	11,700	23,400	9	7	4	5½	4½	249¾	9.25	5.05	7.1	45.6	4,560
7/8	15,800	31,600	10	8	4	5½	4½	303½	11.23	5.71	7.8	74.2	7,420
1	20,000	40,000	11	8	4	6	5	366⅔	13.58	6.27	8.5	98.5	9,850
1⅛	25,000	50,000	12	9	5	6	5	466	17.26	6.75	9.2	132.3	13,230
1¼	30,400	60,800	12½	10	5	6½	5½	567⅔	21.02	7.11	9.7	150.4	15,040

STEEL REINFORCEMENT

Position	Symbol	Anchor for ¾" Cable					Anchor for ⅞" Cable					Anchor for 1" Cable					Anchor for 1⅛" Cable					Anchor for 1¼" Cable				
		Number	Size	Length Each	Length Total	Wt.	Number	Size	Length Each	Length Total	Wt.	Number	Size	Length Each	Length Total	Wt.	Number	Size	Length Each	Length Total	Wt.	Number	Size	Length Each	Length Total	Wt.
				ft	ft	lbs.			ft	ft	lbs.			ft	ft	lbs.			ft	ft	lbs.			ft	ft	lbs.
Vert.	K	12	½"φ	4	48	32	12	½"φ	4	48	32	12	½"φ	4½	54	36	12	½"φ	4½	54	36	12	½"φ	5	60	40
Horiz.	L	12	½"φ	7½	90	60	12	½"φ	8½	102	68	12	½"φ	9½	114	76	12	½"φ	10½	126	84	12	½"φ	11	132	88
Horiz.	M	3	½"φ	3½	10½	7	3	½"φ	3½	10½	7	3	½"φ	3½	10½	7	3	½"φ	4½	13½	9	3	½"φ	4½	13½	9
Horiz.	N	3	½"φ	4⅓	13	8⅔	3	½"φ	4⅓	13½	9	3	½"φ	4⅓	13½	9	3	½"φ	5½	16½	11	3	½"φ	5½	16½	11
Horiz.	P	5	½"φ	5	25	16⅔	5	½"φ	5½	27½	18⅓	5	½"φ	5½	27½	18⅓	5	½"φ	6½	32½	21⅔	5	½"φ	7	35	23⅓
Horiz.	Θ	3	½"φ	5⅔	17	11⅓	3	½"φ	6½	19½	13	3	½"φ	6½	19½	13	3	½"φ	7½	22½	15	3	½"φ	8½	25½	17
	Total				203½	135⅔				221	147⅓				239	159⅓				265	176⅔				282½	188⅓
Horiz.	U-Bar	1	1⅛"φ	14	14	47⅓	1	1¼"φ	16	16	66⅔	1	1⅜"φ	18	18	91	1	1⅝"φ	20	20	141	1	1¾"φ	20	20	163⅓
	Total Weight of Steel					183					214					250					317⅔					352

GENERAL NOTES

1. Where soil conditions are poor use larger anchor or bury anchor deeper.

2. Design
   a. Coefficient of friction between concrete and earth assumed .40
   b. Concrete strength assumed 2000 lb/in² @ 28 days. If strength is not reduced local materials may be used.
   c. Earth surcharge based on 30° slope as shown.

3. Construction and Use
   a. Any open space between vertical sides of anchor and adjacent earth should be carefully filled and well tamped or puddled before load is applied.
   b. Earth surcharge should be in place before load is applied.
   c. Connection between cable and anchorage should be well drained and open to inspection.
   d. Cast iron bearing block for use with U-Bar at cable connection same as shown on "PLANS FOR ANCHORAGES FOR CABLEWAYS - COLUMBUS DISTRICT".

4. If two Side-Hill Anchorages are used on the same cableway, add necessary Erection U-Bars like those shown on "PLANS FOR ANCHORAGES FOR CABLEWAYS - COLUMBUS DISTRICT".

STRUCTURES FOR CABLEWAYS

SIDEHILL ANCHORAGES

Designed in Columbus District

PLATE 8

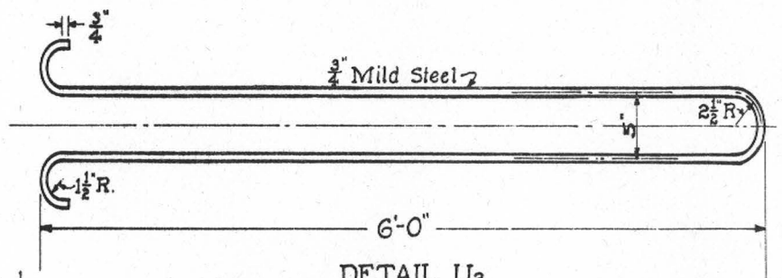

DETAIL U_2

NOTE-Bends to be made at red heat.

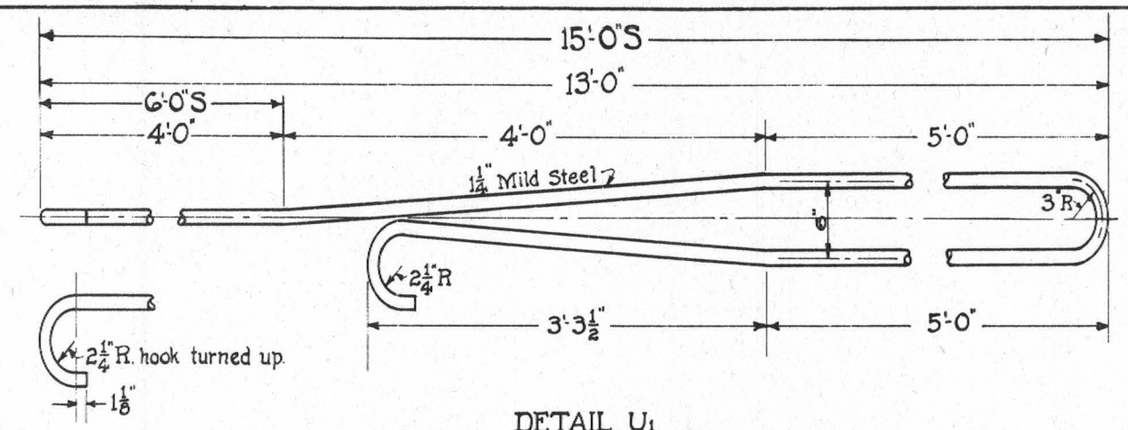

DETAIL U_1

NOTE-All bends to be made at red heat. The loop bend is to be made around the bearing block to secure uniform bearing between the block and rod.

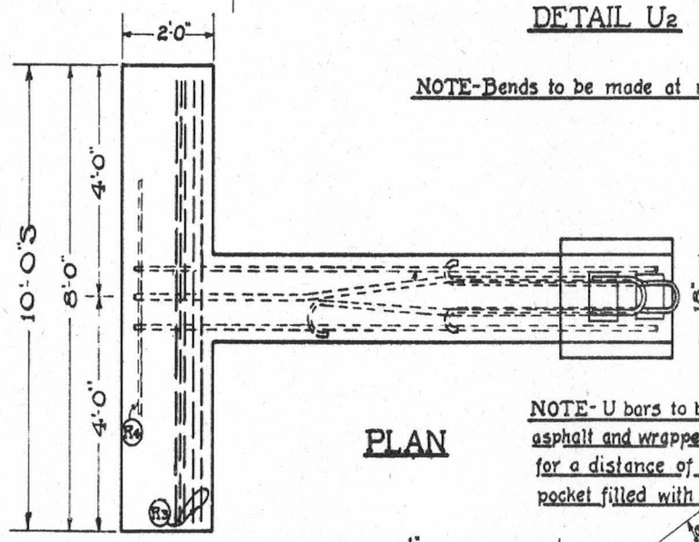

PLAN

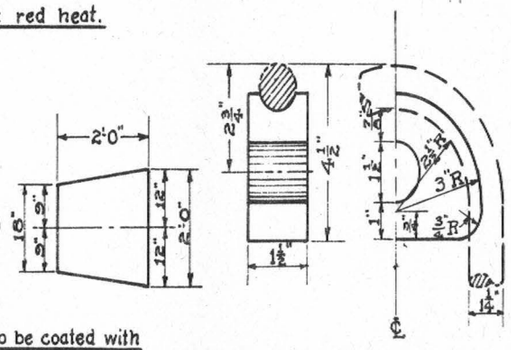

DETAIL OF BEARING BLOCK

NOTE- U bars to be coated with asphalt and wrapped with burlap for a distance of two feet below pocket filled with asphalt.

NOTE- To be cast in grey iron and have hole reamed to fit a $1\frac{1}{2}$" pin.

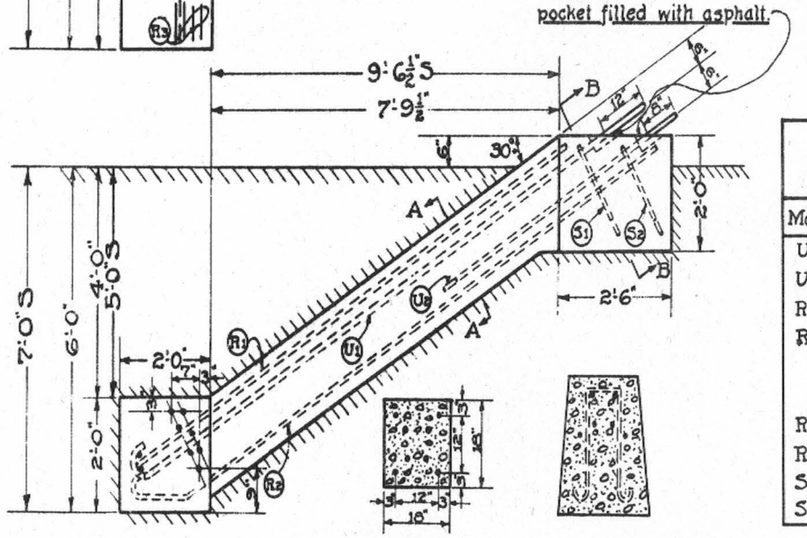

ELEVATION

SECTION A-A

SECTION B-B

BILL OF MATERIAL		
Mark	No Reqd	Description
U_1	1	See detail.
U_2	1	See detail.
R_1	2	$\frac{5}{8}$"Φ-11'-3" long.
R_2	2	$\frac{5}{8}$"Φ-13'-9" long with 30° bend 21" from end of bond hook.
R_3	7	$\frac{5}{8}$"Φ-7'-6" long.
R_4	2	$\frac{5}{8}$"Φ-4'-0" long.
S_1	1	$\frac{1}{2}$"Φ-5'-0" long.
S_2	1	$\frac{1}{2}$"Φ-4'-9" long.

NOTE-When anchor is subject to submersion, use dimensions followed by letter S and lengthen steel accordingly.

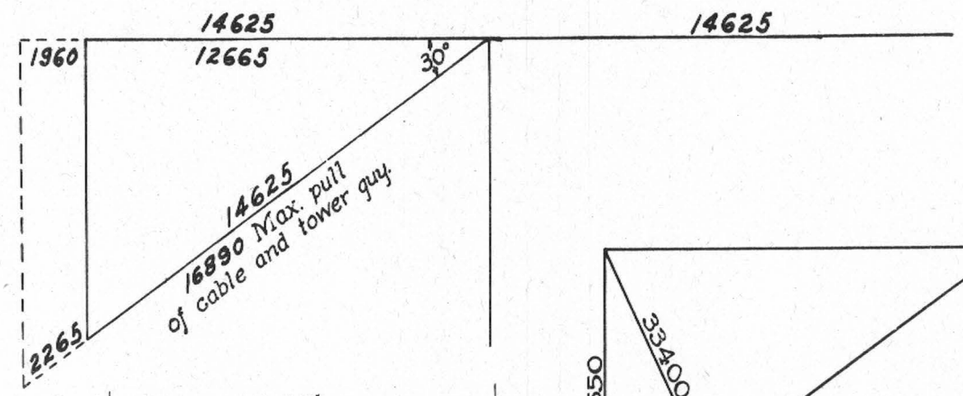

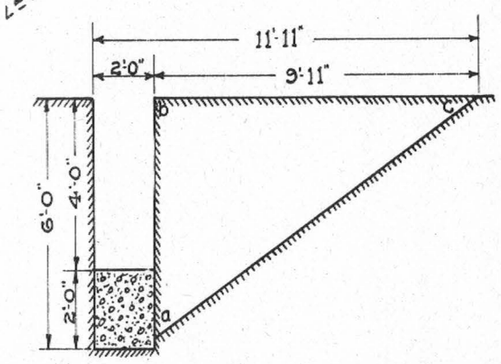

Wt. of prism of earth abc and backfill = 29400
Wt. of concrete (2.26 yds.) = 9150
Total wt. to be moved = 38550

Factor of safety of 4 in cable.
Cable of 58,500# breaking strength.

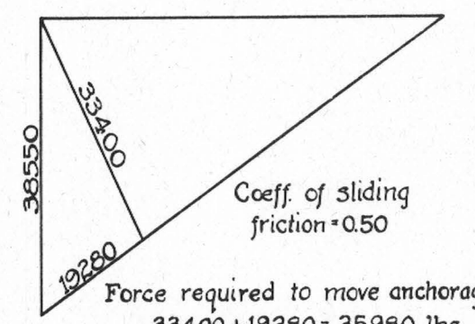

Force required to move anchorage = $\frac{33400}{2} + 19280 = 35980$ lbs.

Factor of safety = $\frac{35980}{16890} = 2.13$

STRUCTURES FOR CABLEWAYS

T-BEAM ANCHORAGE FOR 3/4-INCH CABLEWAY

Designed in Tacoma District

PLATE 9

Supporting structures

For all permanent installations the supporting structures should be designed for a length of life as great as that of the cableway they support. Although timber structures are sometimes used for supports of moderate height, it has been found that the more permanent steel structures generally cost no more than suitable timber structures of the same heights and require less time in erection. Concrete footings and steel anchor bolts should be used.

Heights of supports

The heights of the supports for the cableway are determined by the sag and the clearance that is required for the loaded cableway. On navigable rivers the clearance is specified in the permit issued by the War Department. The supports should, of course, be of a height sufficient to permit operation of a gaging car at a stage of maximum flood. Application for permit should be made through the office of the Corps of Engineers having local jurisdiction. Requirements for clearances should be ascertained in advance and be incorporated in the design and application for permit. This requirement generally is specific, for example, as not less than 75 feet above low water (as designated by that agency at 120 degrees Fahrenheit. This requirement may be considered to apply to the clearance of the unloaded cable at the point of maximum sag (at center except for unsymetrical spans). The clearance that is provided should be from 5 to 10 feet more than that required by the permit in order to allow for possible changes after the cableway has been long in use. The permit from the War Department usually also specifies compliance with requirements that are issued in accordance with law by any department of the Federal Government for aid or protection of aerial navigation. These requirements should be ascertained in advance and used in the design of the structures. The more recent tendency in this respect is to require, for unusually high towers on or adjacent to routes of air travel, painting in alternate bands of specified colors and the installation and operation of airways obstruction lights on the towers (see p. 3). The need for clearance of the loaded cable car above the probable maximum highwater in order that discharge measurements may then be safely made may control in determining the heights of the supports and the allowable sag rather than the clearance required for navigation.

For installations near landing fields or recognized air lanes, the regulations of the Civil Aeronautics Administration, Department of Commerce, should be consulted.

Towers

Designs for steel towers are generally made for the individual installations and the loads and conditions to be expected. Light-weight angles and plates are ordinarily used, but all angles and plates should be at least 1/4 -inch in thickness. The following general specifications are applicable.

Notes:

All holes $1\frac{1}{16}$" dia. unless noted.

All rivets $\frac{5}{8}$" dia.

All bolts $\frac{5}{8}$" dia. unless noted.

All steel including bolts to be galvanized.

Ladder to be secured by U bolts at position indicated and special lugs in addition, as required, to be added at time of shop assembly.

Complete assembly to be made in shop before galvanizing then parts match marked with center punch, parts to be remarked after galvanizing, erection diagram to be furnished showing pieces as match marked.

Plans showing shop details are on file in the Portland District Office.

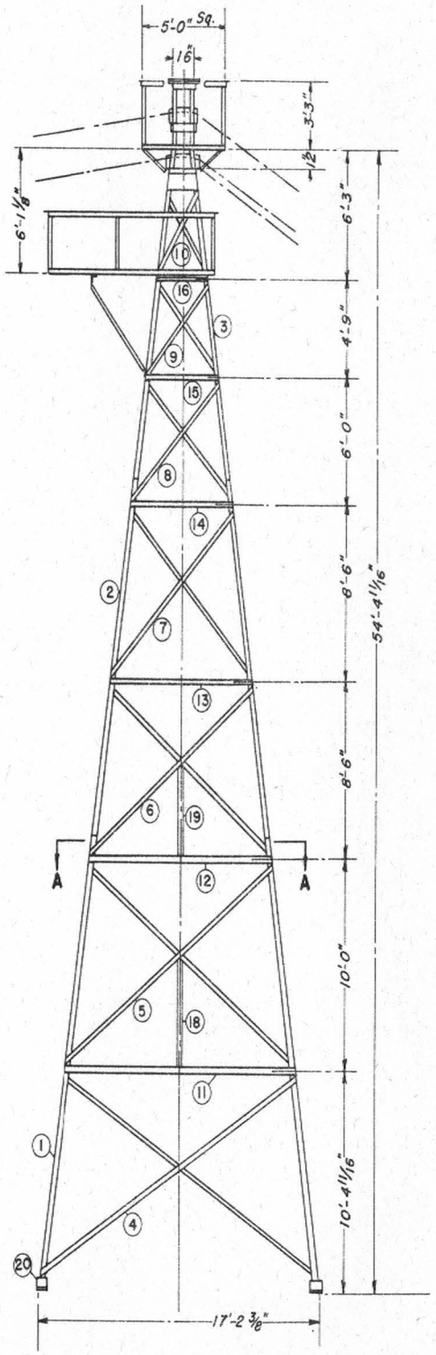

ERECTION DIAGRAM

SCALE

0" 1' 2' 3' 4' 5' 6' 8' 10' 12'

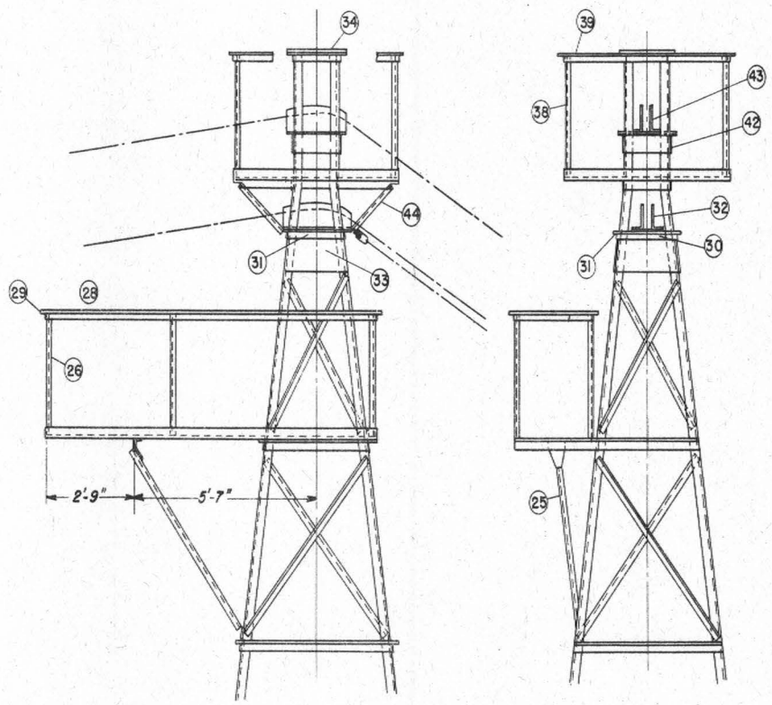

ARRANGEMENT OF PLATFORMS

SCALE

0" 6" 1' 2' 3' 4' 5' 6'

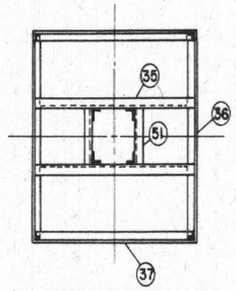

UPPER PLATFORM

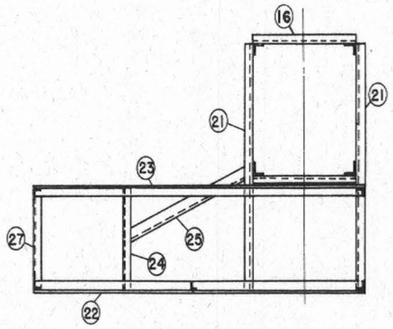

LOWER PLATFORM

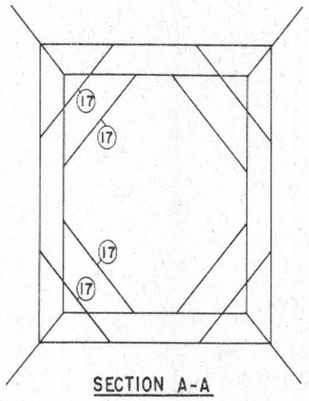

SECTION A-A

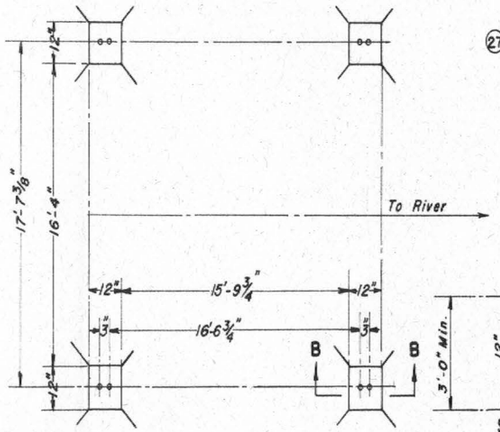

FOUNDATION PIERS

NOT TO SCALE

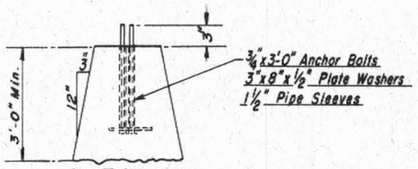

SECTION B-B

STRUCTURES FOR CABLEWAYS

SQUARE STEEL TOWER

WILSONVILLE, OREGON

Designed in Portland District

PLATE 10

The steel to be used shall conform to the specifications of the American Society for Testing Materials for Structural Steel for Bridges, serial designation A7-24 as outlined on pages 69 to 75 inclusive of the 1924 A.S.T.M. Standards. All members must be straight as shown. Layout is to be accurate so that holes will come fair and members come true to dimensions. All bolts 5/8 -inch unless otherwise noted. Bolt holes are to be punched 1/16 -inch larger in diameter than the diameter of the bolts and wherever reasonably possible, are to be punched from the faying surface. All projections are to be removed from the faying surface before galvanizing. All members are to be plainly marked. Details and erection plans are to be furnished by the bidder.

Before galvanizing, a shop assembly of each tower shall be made and all tower members match marked with center punch. After galvanizing, all parts shall be plainly marked for field erection before shipping.

All steel, including field bolts, shall be galvanized by the hot dip process. The galvanizing shall consist of a continuous coating of commercially-pure zinc of uniform thickness so applied that it adheres firmly to the surface of the steel. The galvanized coating shall be of first class commercial quality free from injurious defects; it shall be non-peeling and non-cracking, and shall have sufficient toughness to resist weathering and corrosion.

Plans for square steel towers that were designed by the Portland district office for gaging stations on the Willamette and Columbia rivers are shown in plates 10 to 13. The towers shown in the photograph, plate 1, are those for which the designs are given in plates 12 and 13. For a tower more than 60 feet in height, a stairway instead of a steel ladder is recommended.

The designs given in plates 10 to 13 may be adapted to other heights of towers by making necessary changes.

Steel A-frames

If the heights of the supports are not more than 40 feet, steel A-frames may be used. If practicable, the steel should be galvanized, as in most cases that will be less expensive than frequent repainting over a period of years.

Light-weight channels or column sections, such as the Carnegie H-beam or WF sections, should be used for the legs of the A-frame. The dimensions and weights of the sections would vary with the height and the load. The stability of the A-frame, acting as a column, should be investigated in individual cases, especially for long spans. Hinge-pin connections at the base of steel A-frames are generally recommended, as the erection can be made with less difficulty and there is less liklihood of the anchor bolts being loosened by flexure of the A-frame.

ITEM	No.REQ.	DESCRIPTION	WEIGHT	ITEM	No. REQ.	DESCRIPTION	WEIGHT
1	4	Angle 4"x4"x1/4"x22'-0 1/16" with 3"x3"x1/4"	600.5 lbs.	29	2	Angle 1 3/4"x1 3/4"x3/16"x2'-5 1/2"	10.4 lbs.
2	4	" 3 1/2"x3 1/2"x1/4"x17'-4 5/16" with 3"x3"x1/4"	412.3	30	2	" 3"x3"x1/4"x1'-10"	17.9
3	4	" 3"x3"x1/4"x19'-4 3/8"	379.5	31	2	" 3"x3"x1/4"x1'-6 9/16"	15.1
4	8	" 1 3/4"x1 3/4"x3/16"x18'-3 3/16"	309.7	32	1	3/8" plate with 4"x10"x1/2" bent plates	145.7
5	8	" " x15'-10 7/16"	269.1	33	4	1/4" plate	64.1
6	8	" " x12'-9 13/16"	217.4	34	1	1/4" plate with 2"x2"x3/16" angles	14.0
7	8	" " x11'-0 3/8"	187.1	35	2	Angle 3"x3"x1/4"x4'-11"	48.2
8	8	" " x7'-8 7/8"	131.2	36	2	" " x5'-0"	49.0
9	8	" " x5'-9"	97.5	37	2	" " x4'-11"	48.2
10	8	" " x4'-9 7/16"	81.1	38	4	" 2"x2"x1/8"x3'-3"	21.4
11	4	" 2 1/2"x2 1/2"x3/16"x14'-0 1/2"	172.0	39	4	" 1 3/4"x1 3/4"x3/16"x4'-11 1/4"	41.8
12	4	" " x11'-1 1/2"	136.6	40		Lower platform grating (in 3 parts)	168.0
13	4	" " x8'-8"	106.4	41		Upper platform grating (in 3 parts)	137.8
14	4	" 2"x2"x3/16"x6'-2"	60.1	42	4	6"x3"x1/4"x1'-3" bent plates	38.2
15	4	" " x4'-5"	43.2	43	1	1/4" plate with 8"x3"x3/8" bent plates	80.8
16	2	" " x3'-0 3/8"	14.7	44	4	2"x2"x3/16"x2'-1 1/4" (2 as shown - 2 reversed)	20.6
17	8	" 1 3/4"x1 3/4"x3/16"x6'-5 1/8"	109.0	45	4	Ladder sections	345.2
18	4	" " x5'-9 1/2"	49.1	46	16	U-bolts for ladder	26.0
19	4	" " x4'-11 7/8"	42.3	47	45	1/2"x1 1/2" bolts	10.8
20	4	" 6"x6"x1/2"x0'-6" (2 as shown - 2 reversed)	39.2	48	440	5/8"x1 1/2" "	180.4
21	2	" 3"x3"x1/4"x5'-9 1/4"	56.6	49	12	3/4"x2" "	8.0
22	1	" " x10'-1 3/4"	49.7	50	6	5/8"x5" "	4.3
23	1	" " x10'-1 3/4"	49.7	51	2	Angle 3"x3"x1/4"x15"	12.3
24	1	" " x2'-6" with 1/4" plate	16.1	52	6	5/8"x5 1/2" bolts	4.5
25	1	" " x5'-9 3/8"	28.3			Total Weight of Steel	5,230.5 lbs.
26	5	" 1 3/4"x1 3/4"x3/16"x3'-0" (2 as shown - 3 reversed)	31.8	53	1	Ironbark saddle to fit item 32	
27	1	" 2"x2"x3/16"x2'-6"	6.1	54	1	Ironbark saddle to fit item 43	
28	1	" 1 3/4"x1 3/4"x3/16"x10'-1 3/4"	21.5				

STRUCTURES FOR CABLEWAYS

SQUARE STEEL TOWER

WILSONVILLE , OREGON

Designed in Portland District

BILL OF MATERIAL

PLATE II

U.S. DEPARTMENT OF INTERIOR

GEOLOGICAL SURVEY

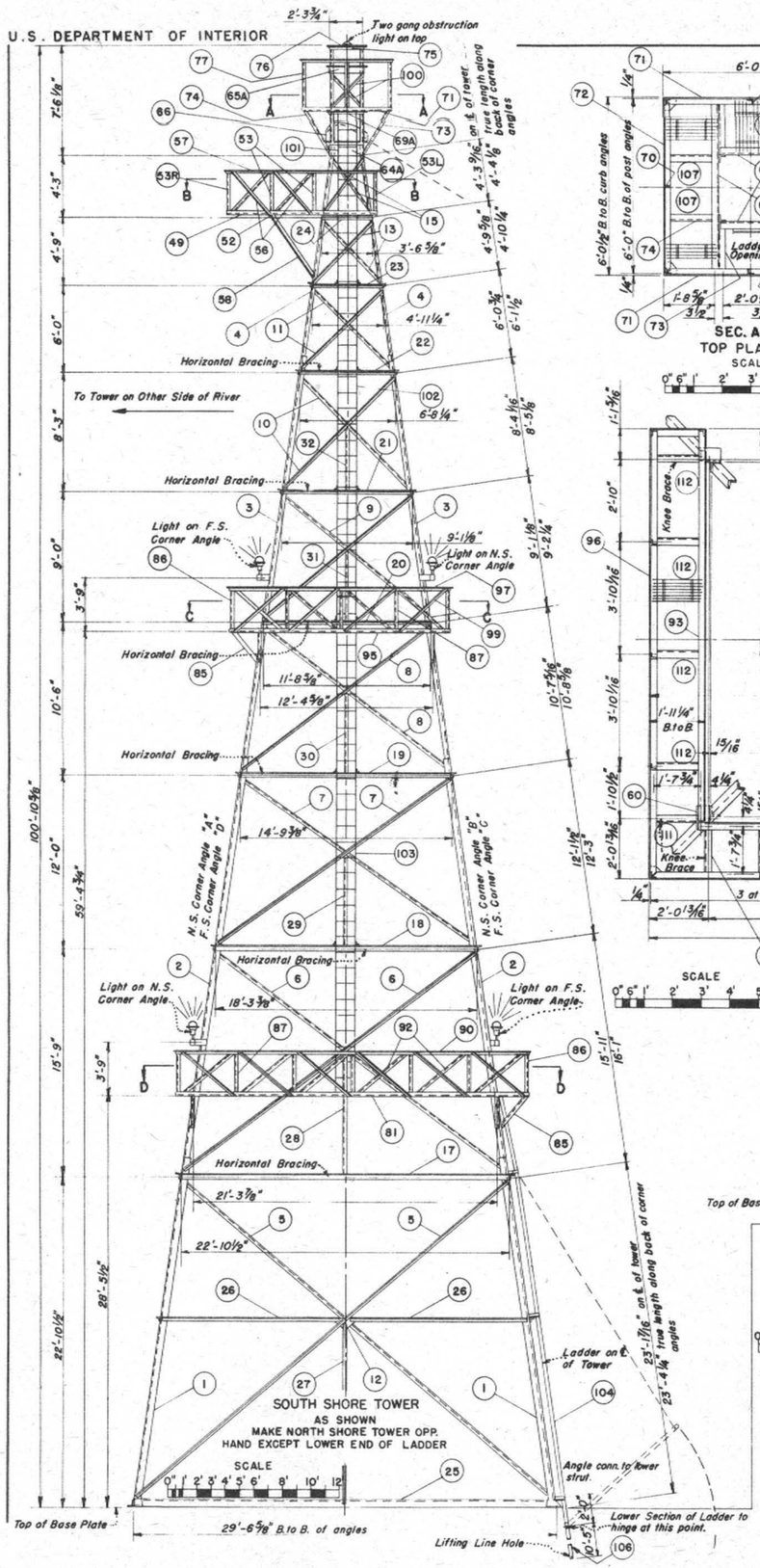

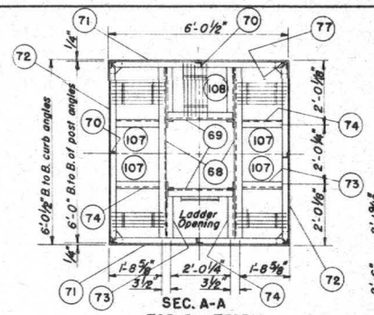

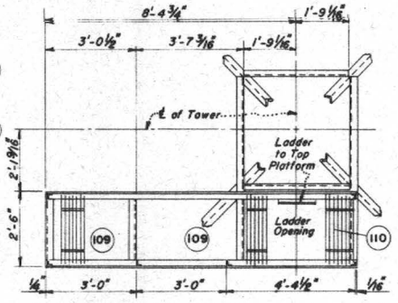

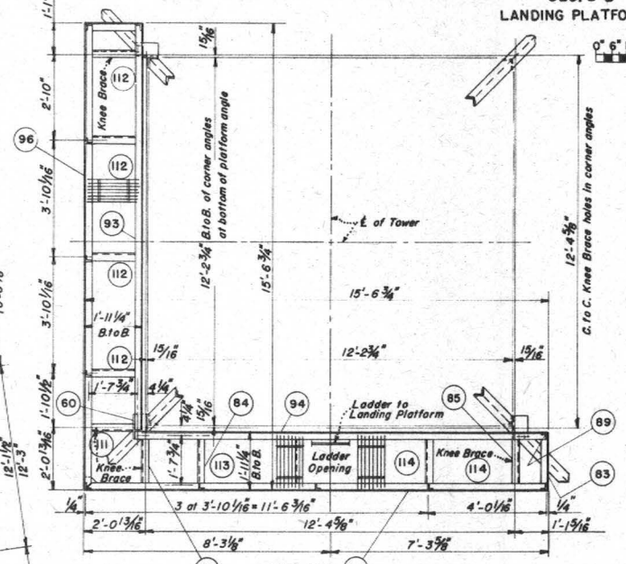

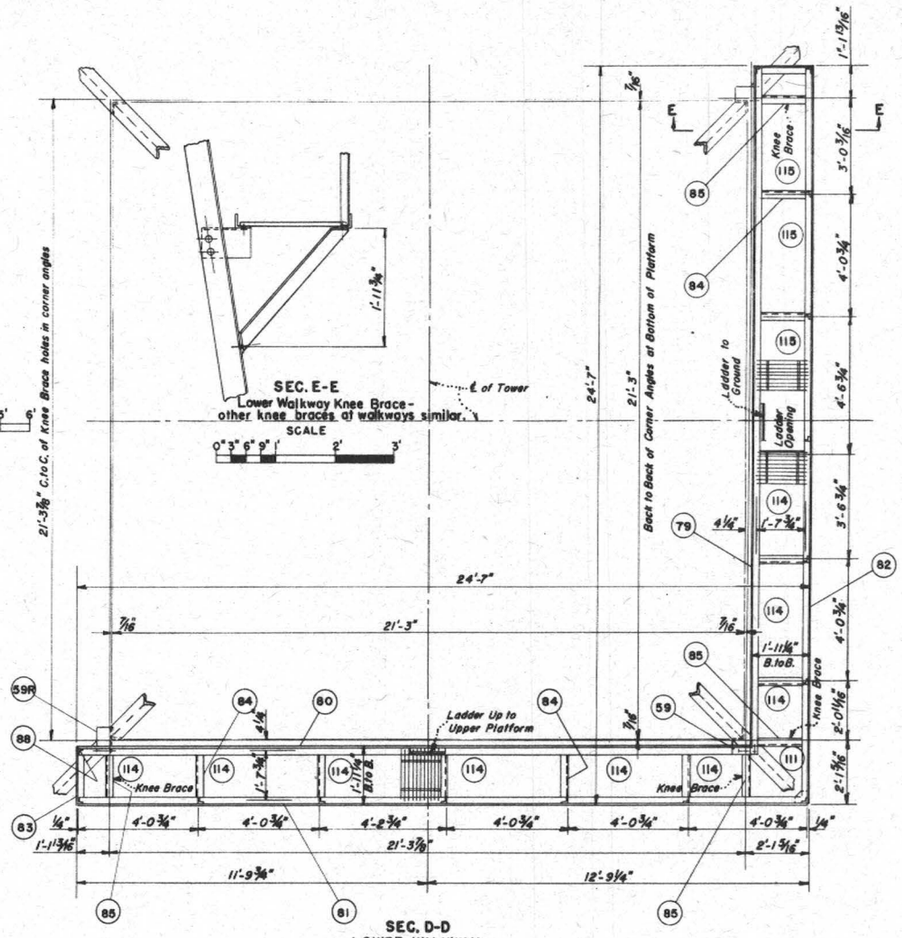

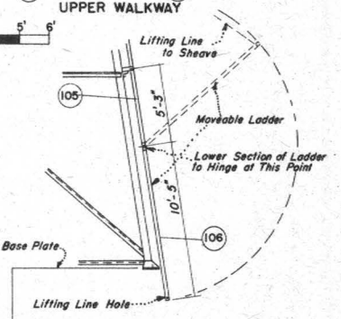

MOVEABLE LADDER ARRANGEMENT FOR NORTH SHORE

SCALE

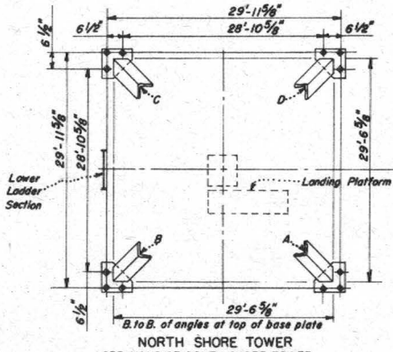

NORTH SHORE TOWER
OPP. HAND OF SOUTH SHORE TOWER

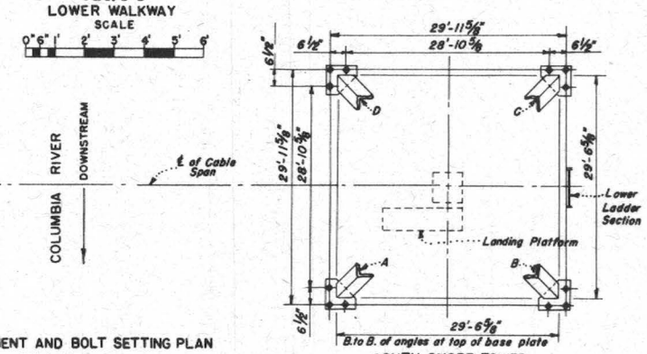

SOUTH SHORE TOWER
AS SHOWN

ARRANGEMENT AND BOLT SETTING PLAN
Not to Scale

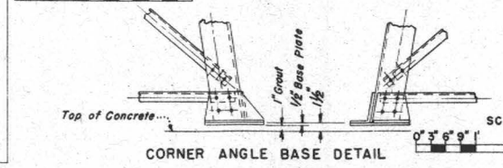

CORNER ANGLE BASE DETAIL

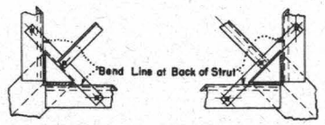

HORIZONTAL BRACING CONN. AT CORNER ANGLES

Note:
Plans showing the bill of materials and shop details are on file in the Portland District Office.

STRUCTURES FOR CABLEWAYS

SQUARE STEEL TOWER

MARYHILL, WASHINGTON

Designed in Portland District

PLATE 12

ITEM NO. 66 MAKE 1

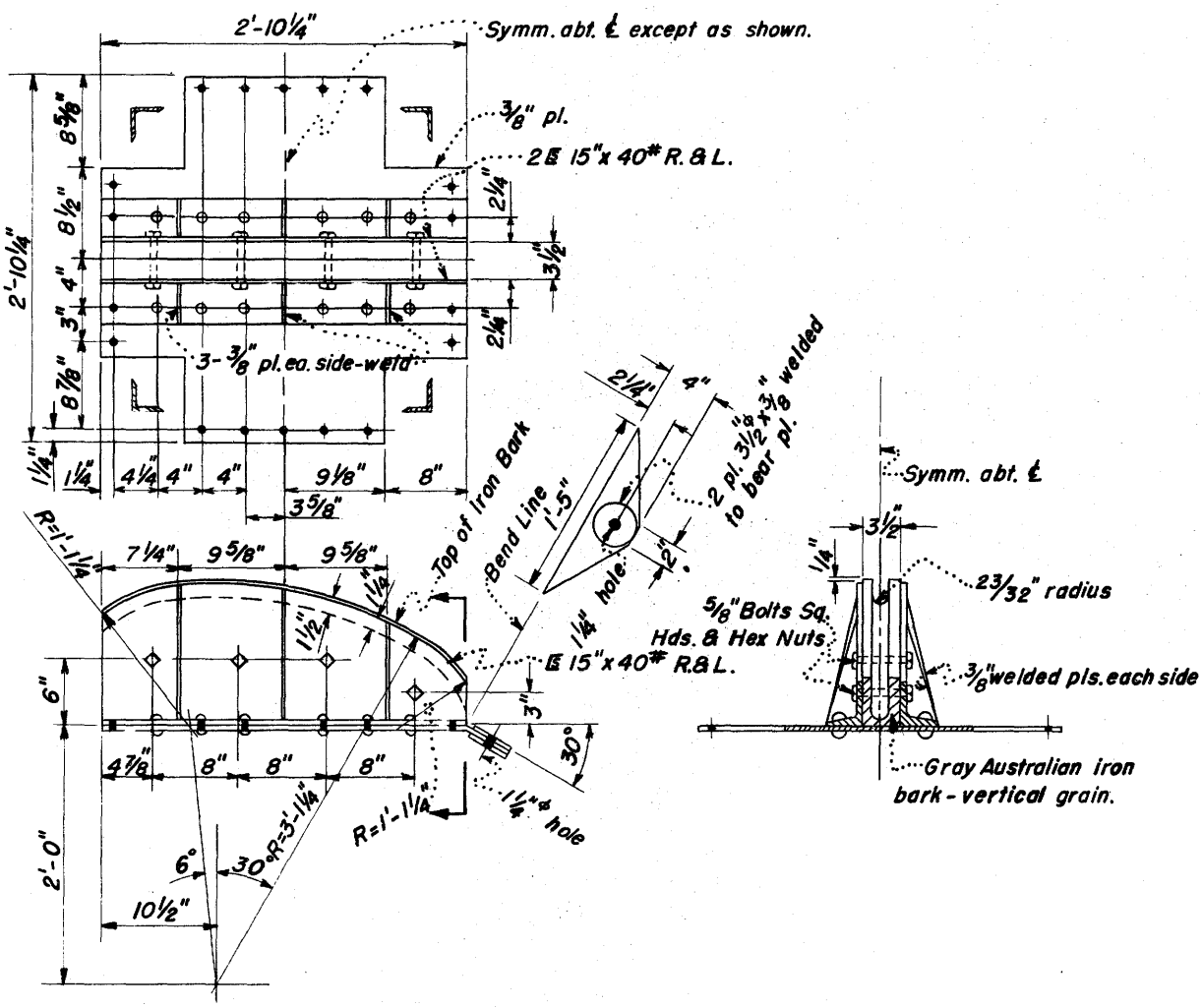

STRUCTURES FOR CABLEWAYS

SQUARE STEEL TOWER

SADDLE

FOR 1 3/8-INCH TRAMWAY TRACK STRAND

Designed in Portland District

PLATE 13

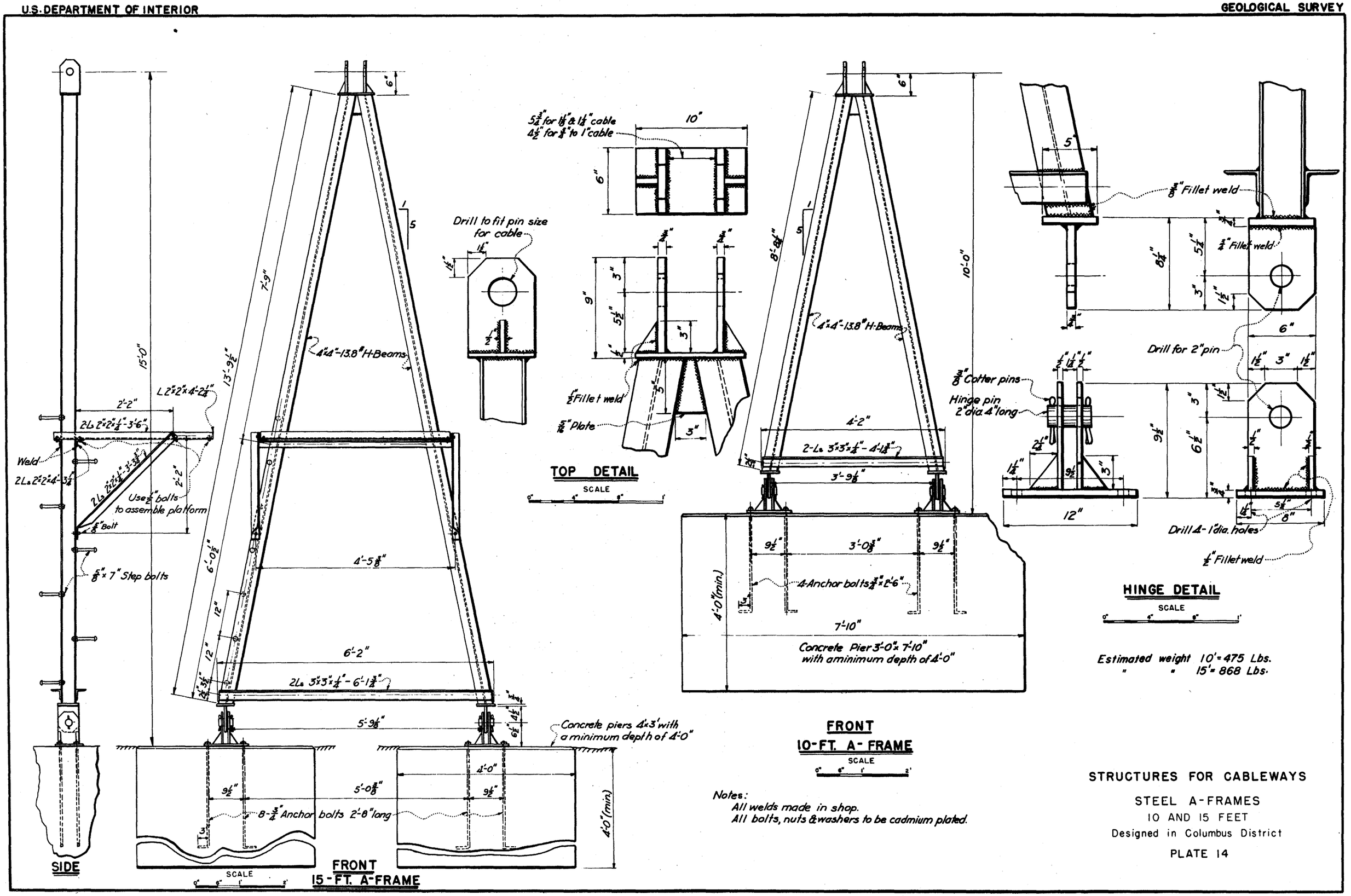

STRUCTURES FOR CABLEWAYS

STEEL A-FRAMES

10 AND 15 FEET

Designed in Columbus District

PLATE 14

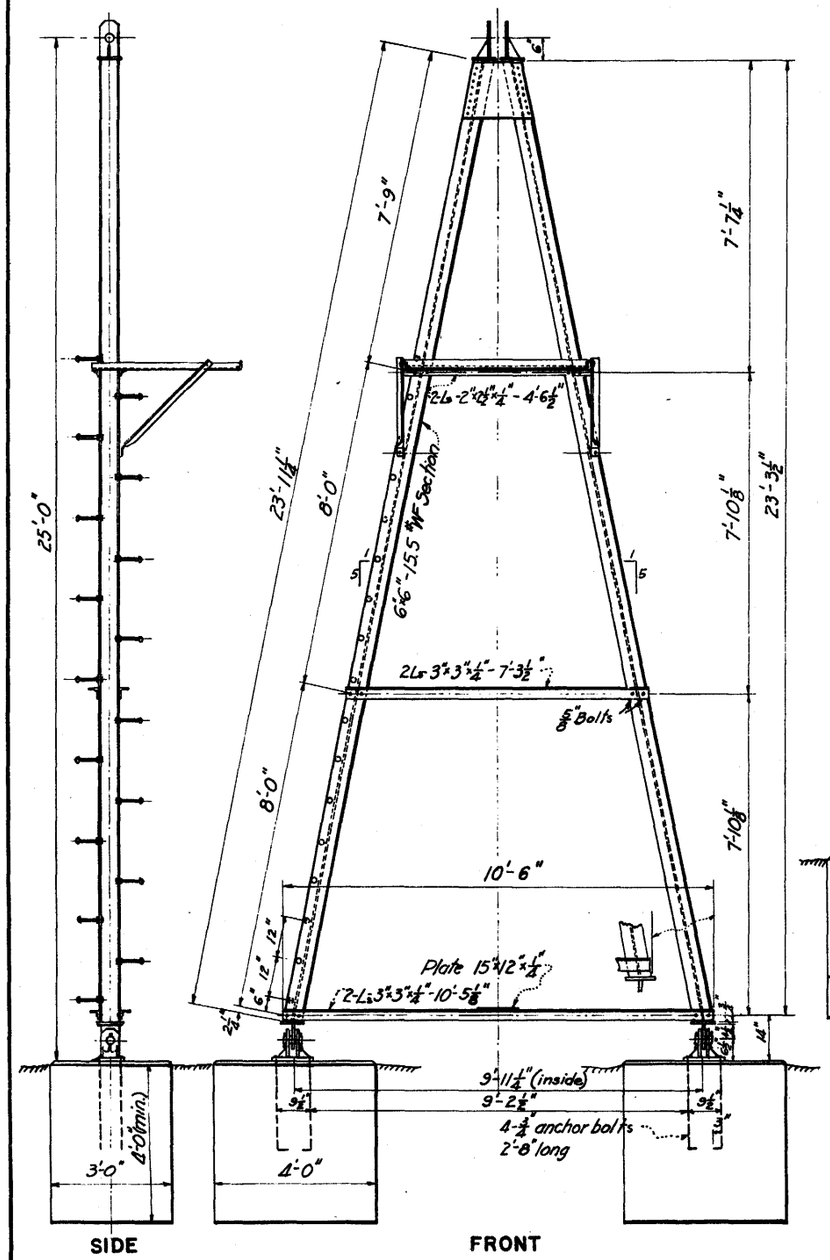

25 FT. A-FRAME

SCALE

Note: Use ⅝" bolts to assemble A-Frames
All bolts, nuts and washers to be cadmium plated.

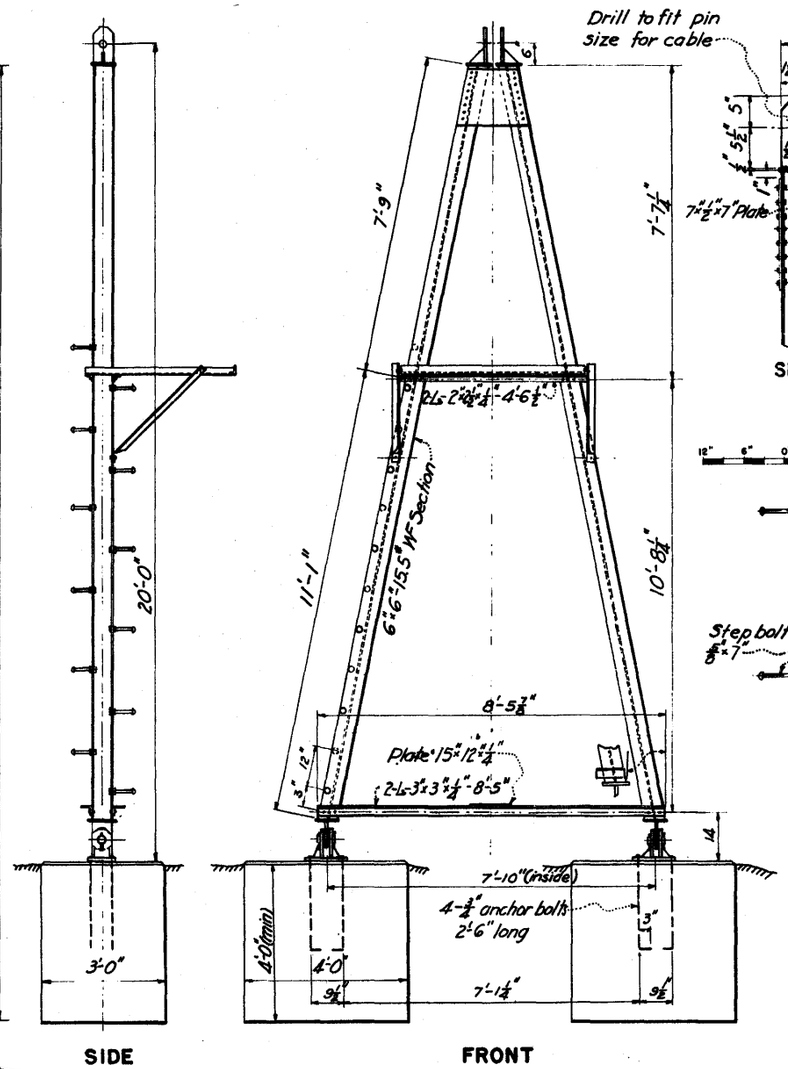

20 FT. A-FRAME

SCALE

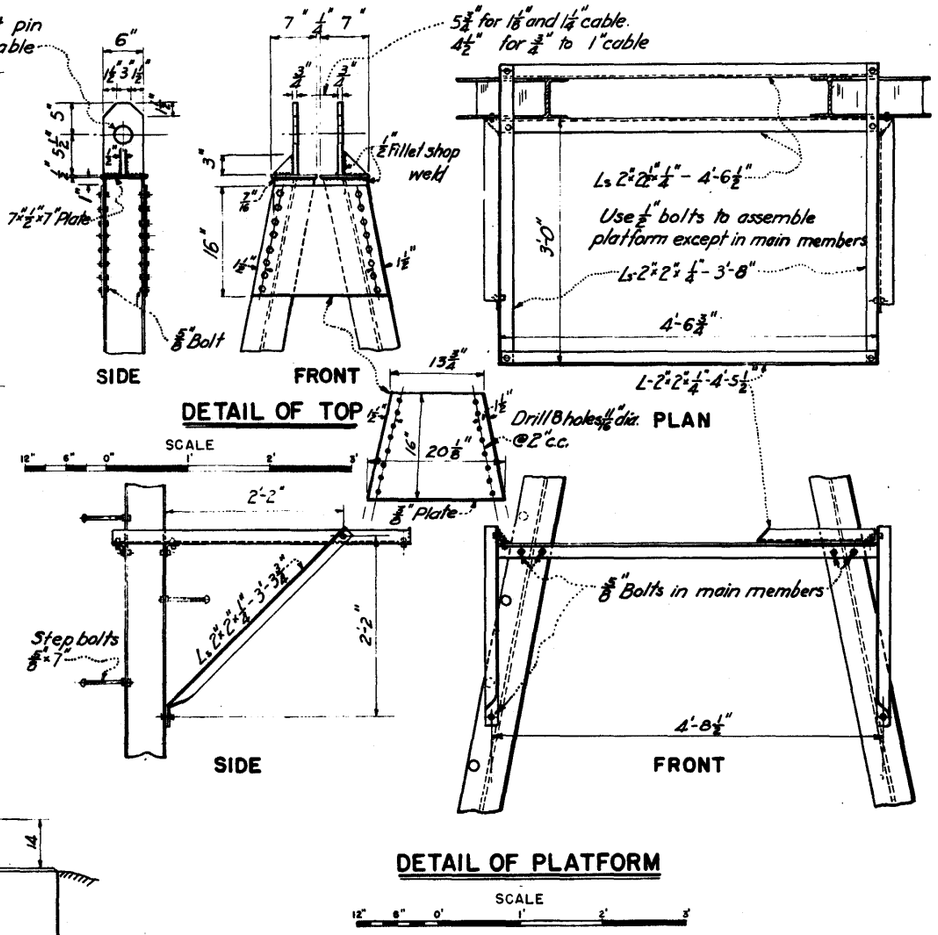

DETAIL OF PLATFORM

SCALE

Estimated weight 20' = 931 Lbs.
" " 25' = 1267 Lbs.

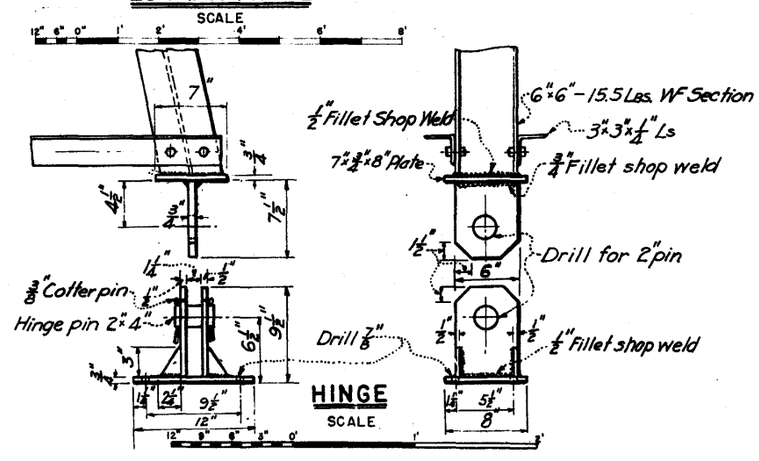

HINGE

SCALE

STRUCTURES FOR CABLEWAYS

STEEL A-FRAMES

20 AND 25 FEET

Designed in Columbus District

PLATE 15

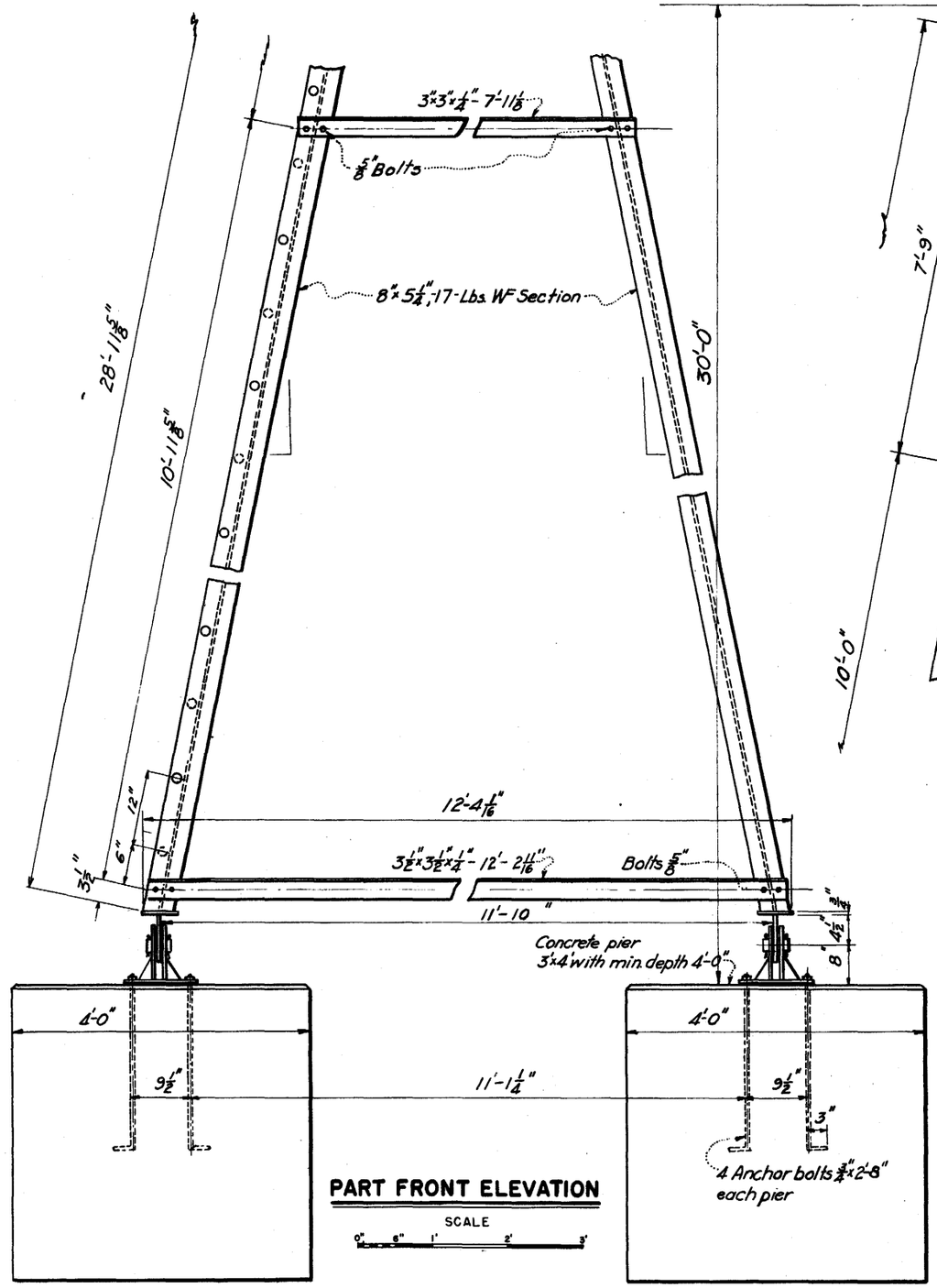

PART FRONT ELEVATION

SCALE

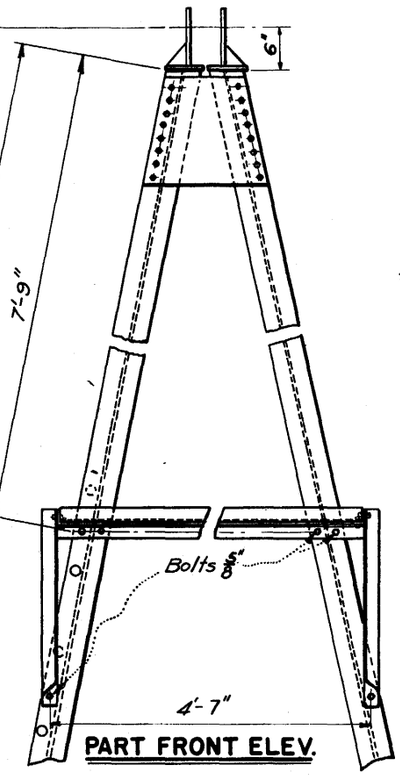

PART FRONT ELEV.

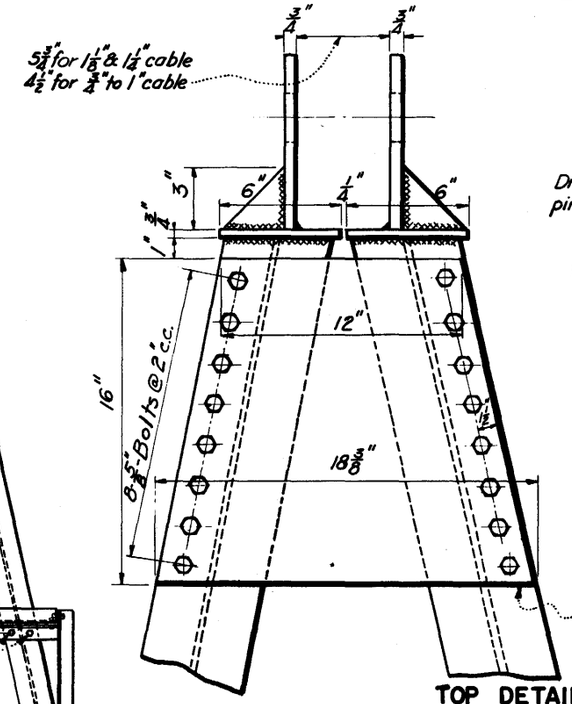

TOP DETAIL

SCALE

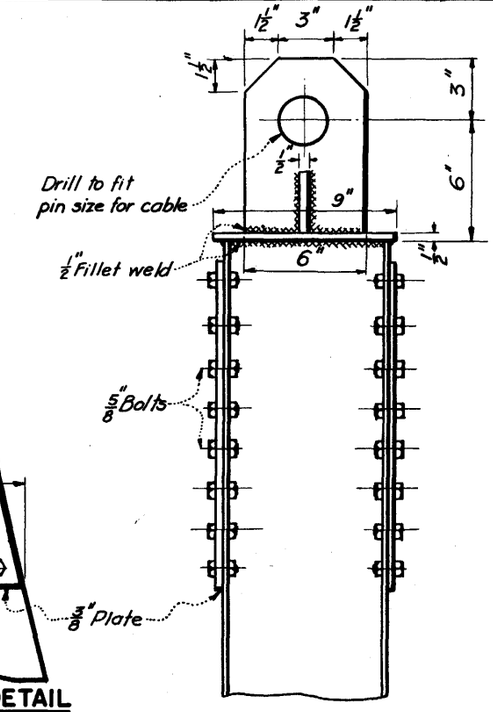

Note:
All welds to be made in shop.
All bolts, nuts & washers to be cadmium plated.

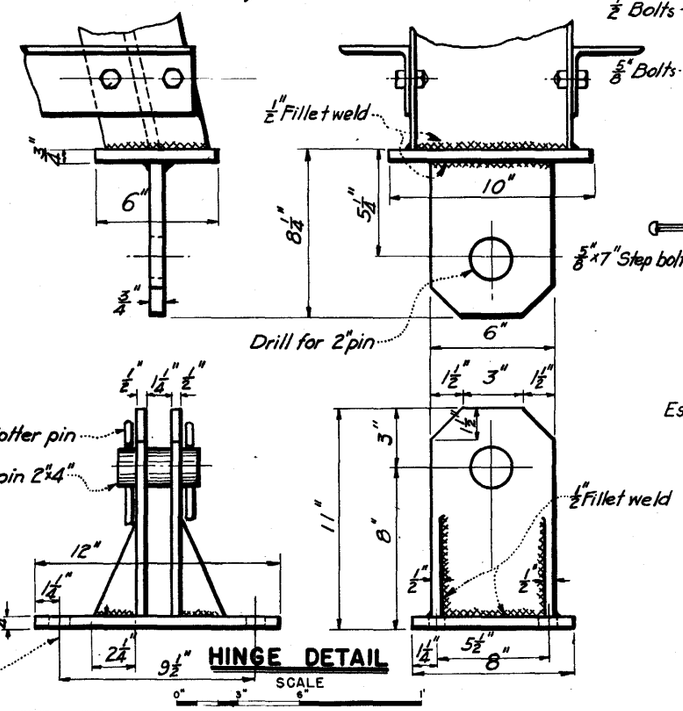

HINGE DETAIL

SCALE

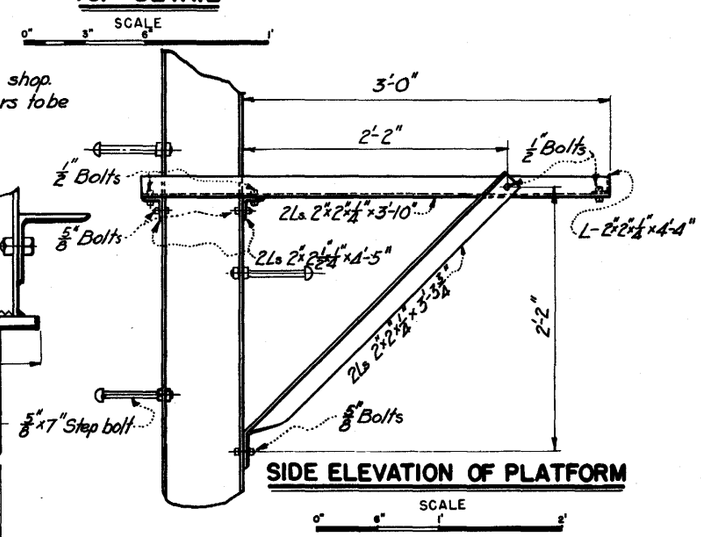

SIDE ELEVATION OF PLATFORM

SCALE

Estimated weight = 1571 Lbs.

STRUCTURES FOR CABLEWAYS

STEEL A-FRAMES

30 FEET

Designed in Columbus District

PLATE 16

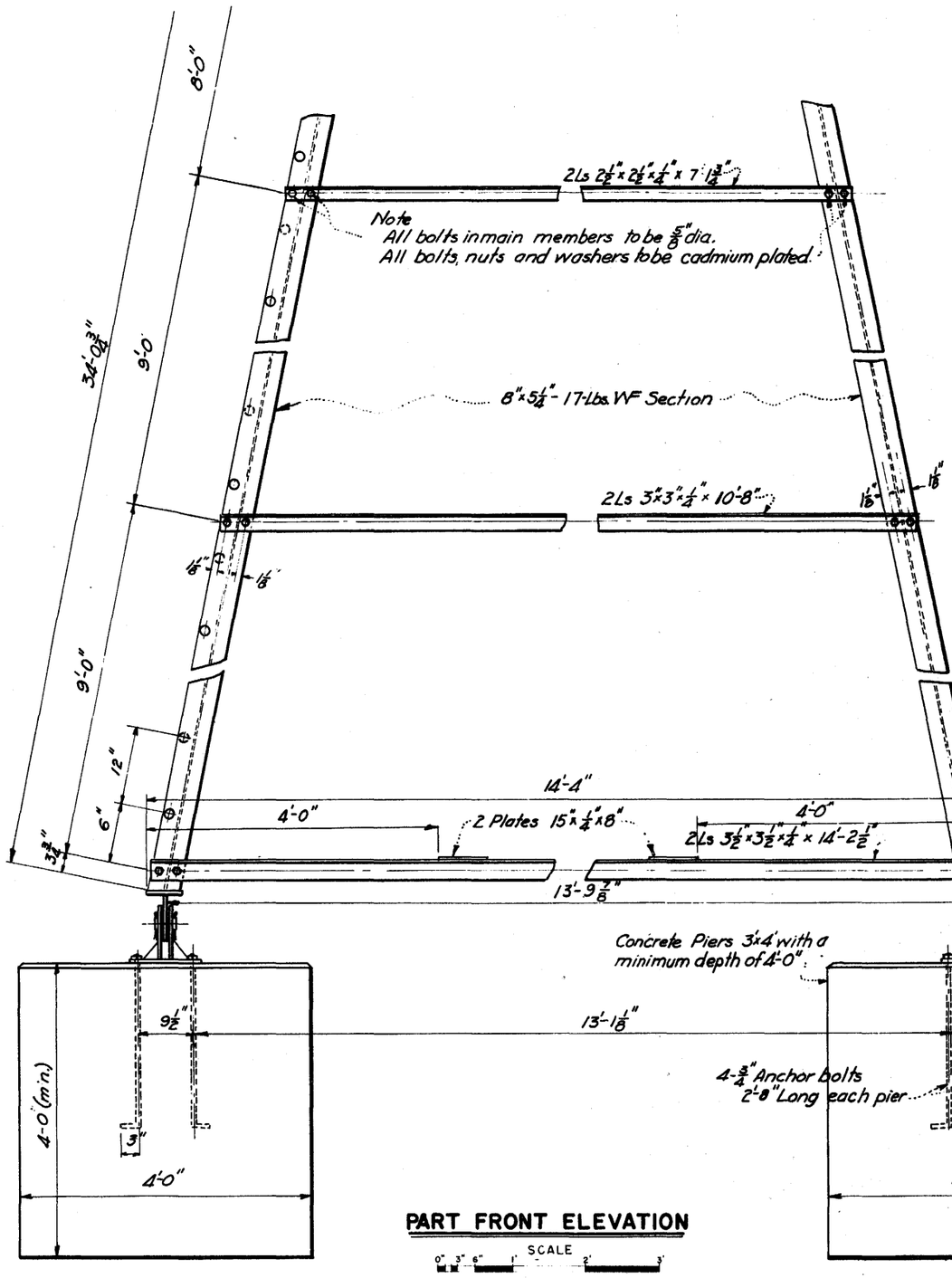

PART FRONT ELEVATION

SCALE

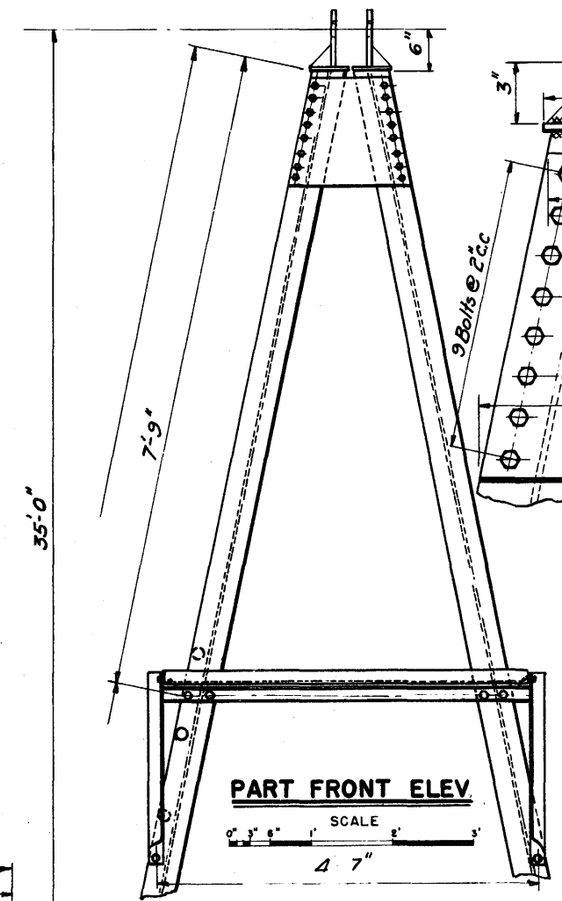

PART FRONT ELEV.

SCALE

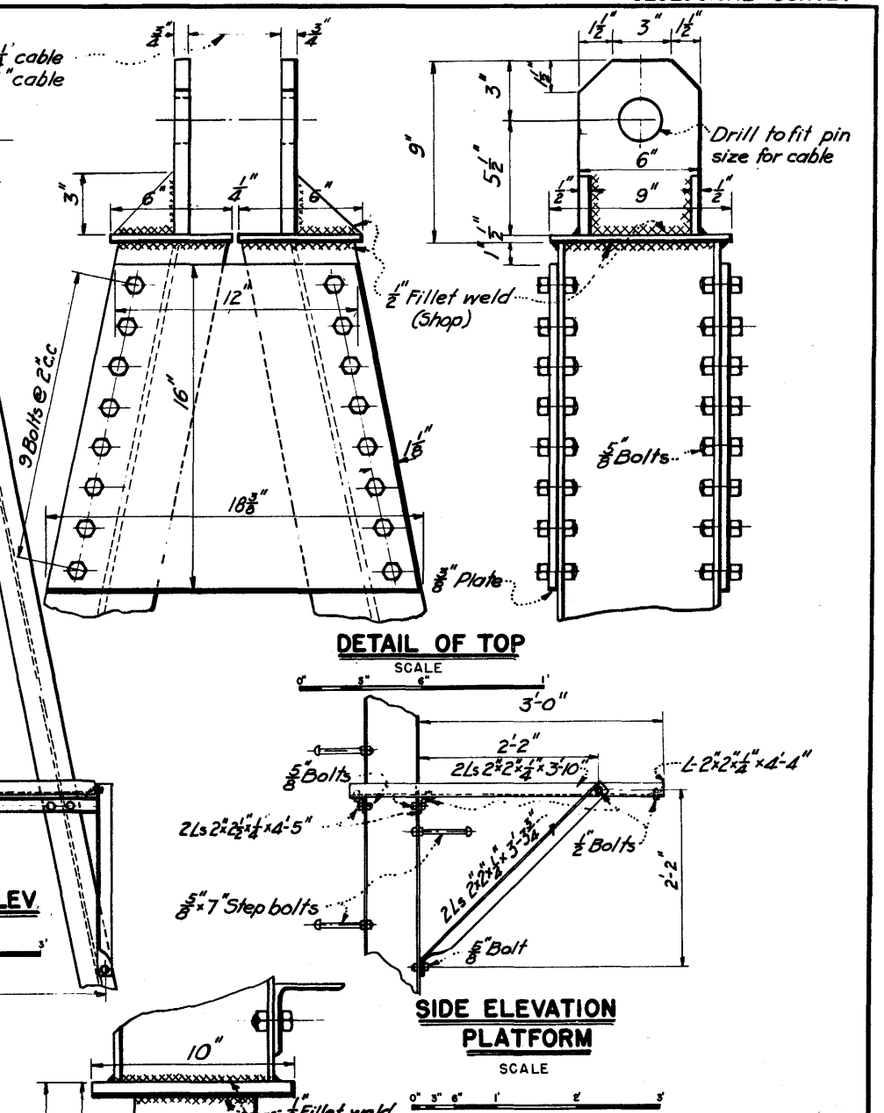

DETAIL OF TOP

SCALE

SIDE ELEVATION PLATFORM

SCALE

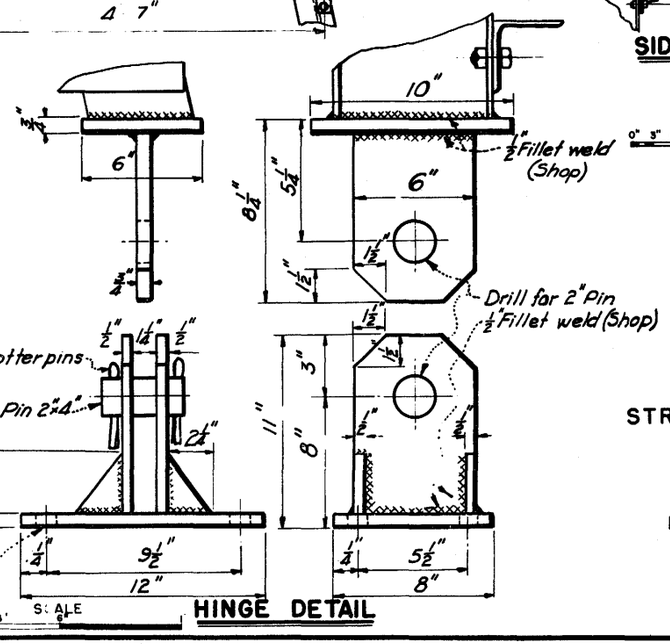

HINGE DETAIL

SCALE

Estimated weight = 1912 Lbs.

STRUCTURES FOR CABLEWAYS

STEEL A-FRAMES

35 FEET

Designed in Columbus District

PLATE 17

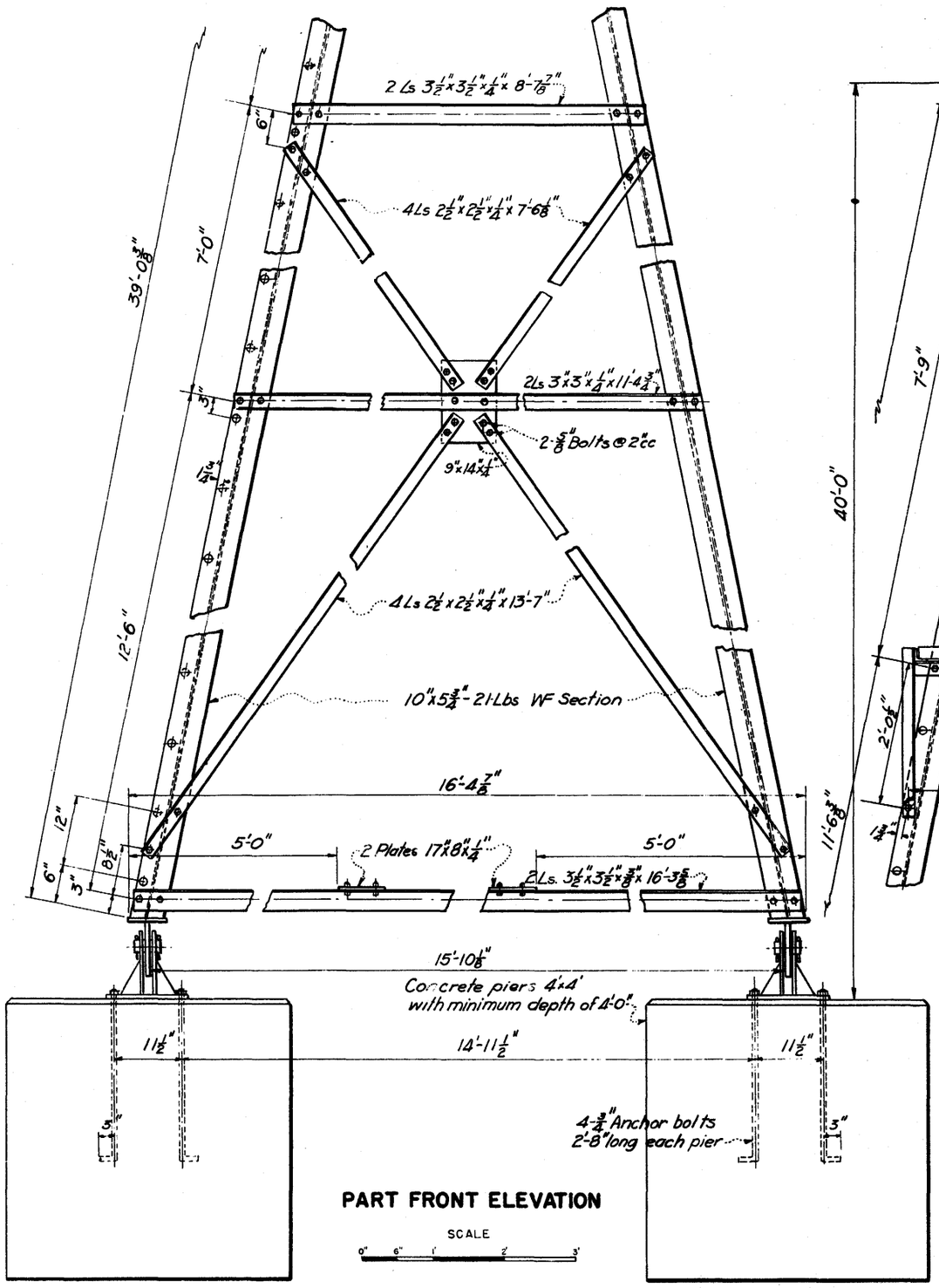

PART FRONT ELEVATION

SCALE

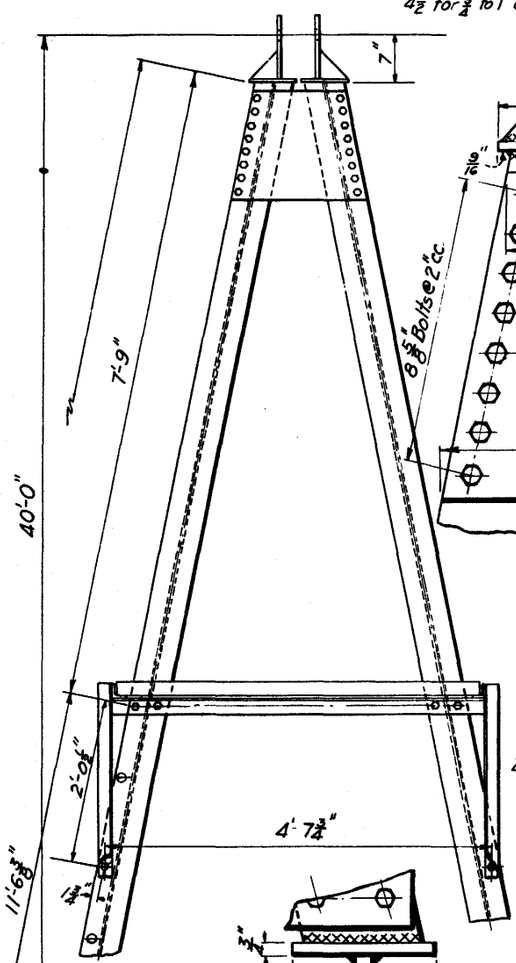

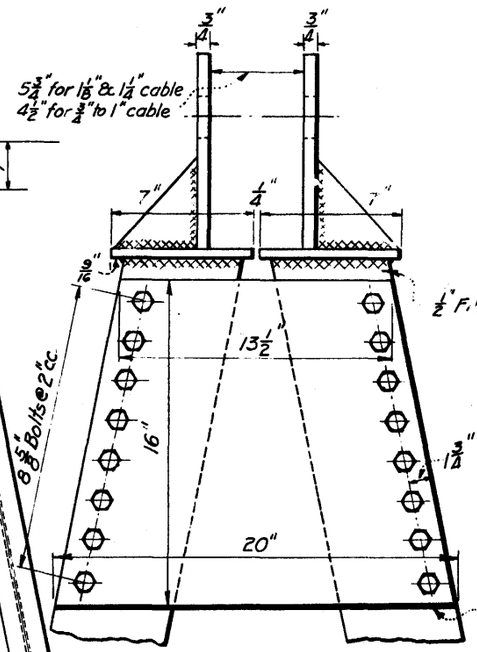

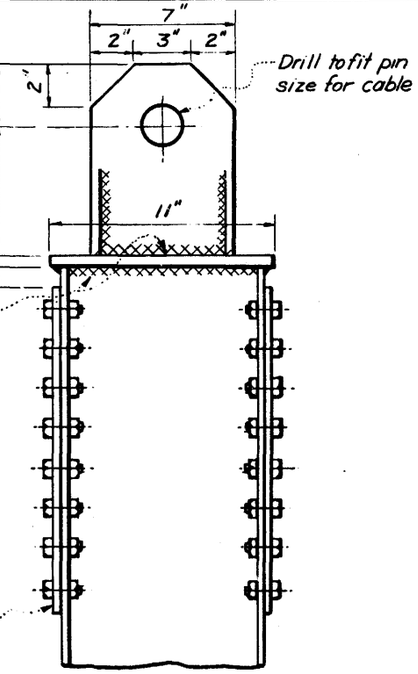

TOP DETAILS

SCALE

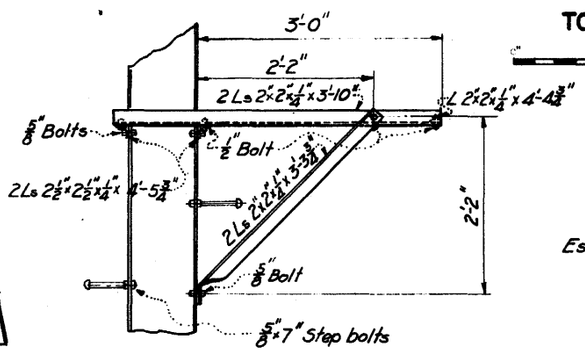

Estimated weight 2534 Lbs.

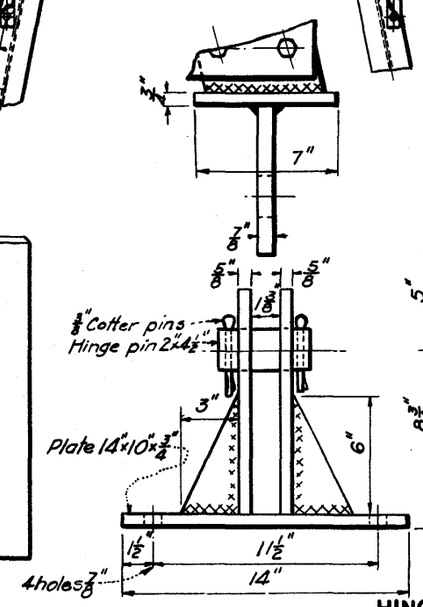

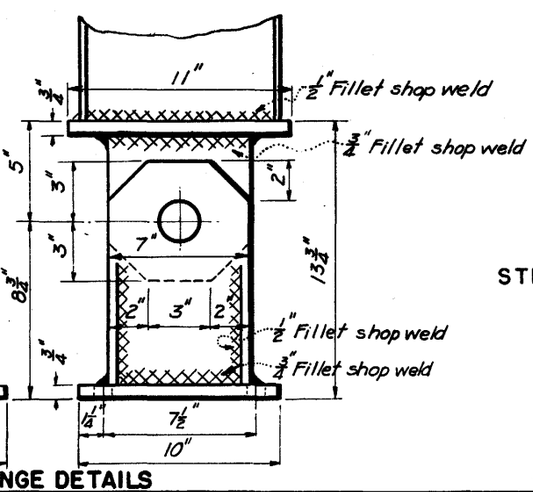

HINGE DETAILS

STRUCTURES FOR CABLEWAYS

STEEL A-FRAMES

40 FEET

Designed in Columbus District

PLATE 18

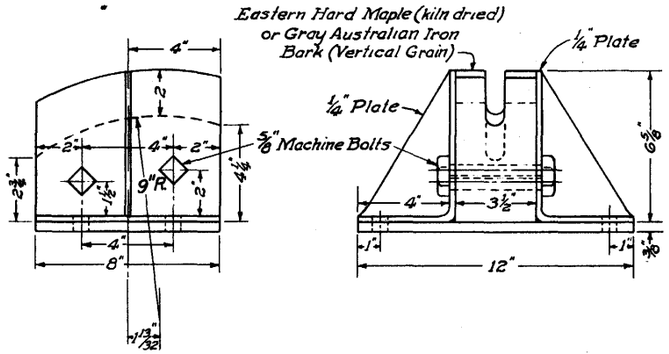

Note:-
Assembly to be welded together.
All holes to be 11/16" for 5/8" bolts
Bottom of slot in wood block to have 1/32" greater radius than that of cable to be used. Top of slot to be 1/8" wider than bottom.

SADDLE DETAILS

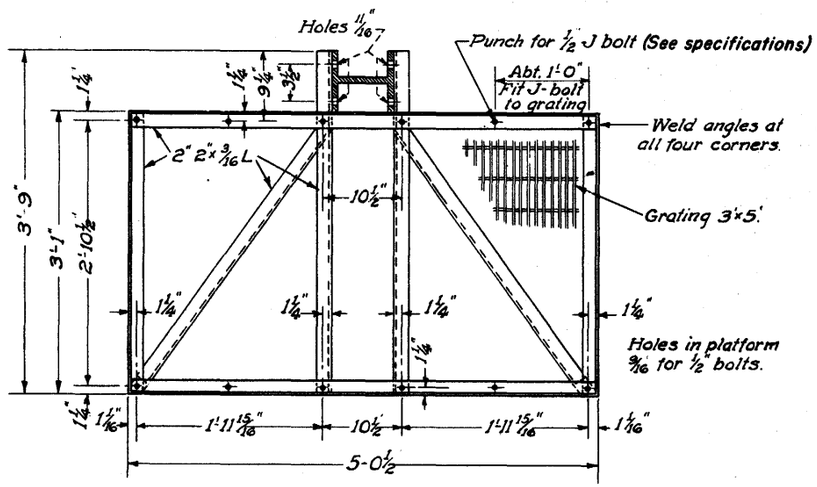

LANDING PLATFORM

GRATING SPECIFICATIONS

Grating to conform to Irving X-Bar (pressure locked), type AA, symbol 2S, as adopted by U.S. Government, Federal Specifications R.R.G.-661a, Jan 20, 1936.
Bearing bars: 1"x1/8"x3'-0" spaced on 1 3/16" centers
Cross bars: 3/4"x1/8"x5'-0 " " 4' "
Grating to be galvanized by the hot dip process.
Prefabricated grating to be attached by clips furnished by the manufacturer instead of by J-bolts.

Pin connection may be used instead of saddle.

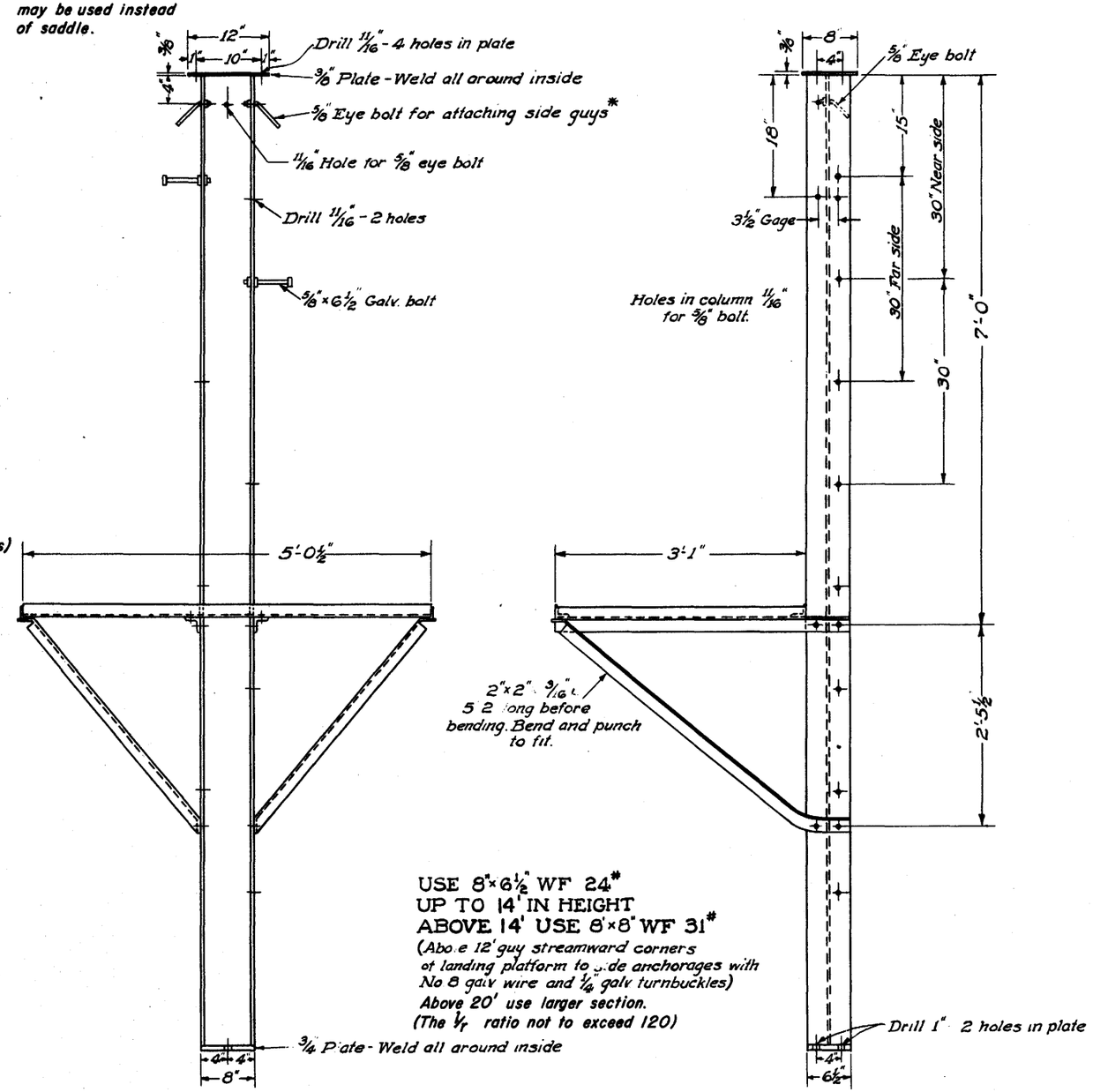

USE 8"x6 1/2" WF 24#
UP TO 14' IN HEIGHT
ABOVE 14' USE 8"x8" WF 31#
(Above 12' guy streamward corners of landing platform to side anchorages with No 8 galv wire and 1/4" galv turnbuckles)
Above 20' use larger section.
(The l/r ratio not to exceed 120)

CABLEWAY POST

* Each side guy to consist of 3/8" or 1/2" galv. wire rope with 3/4" x 12" galv. turnbuckle attached to 5/8" U-bar set in concrete block anchorage of about one cubic yard in volume.

STRUCTURES FOR CABLEWAYS

STEEL POST SUPPORT

Designed in Boston and Tacoma Districts

PLATE 19

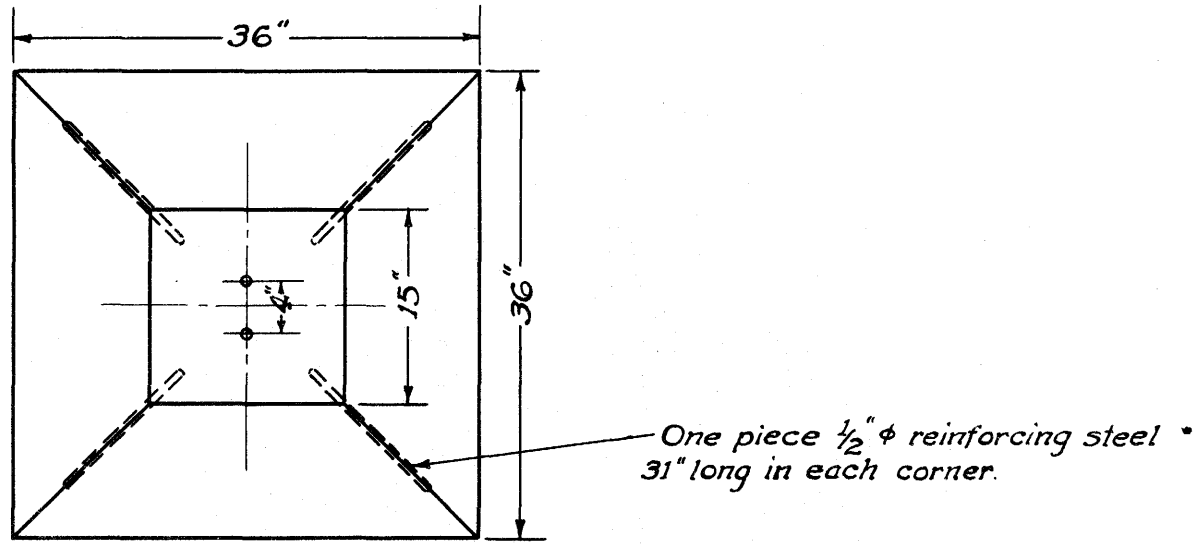

PLAN

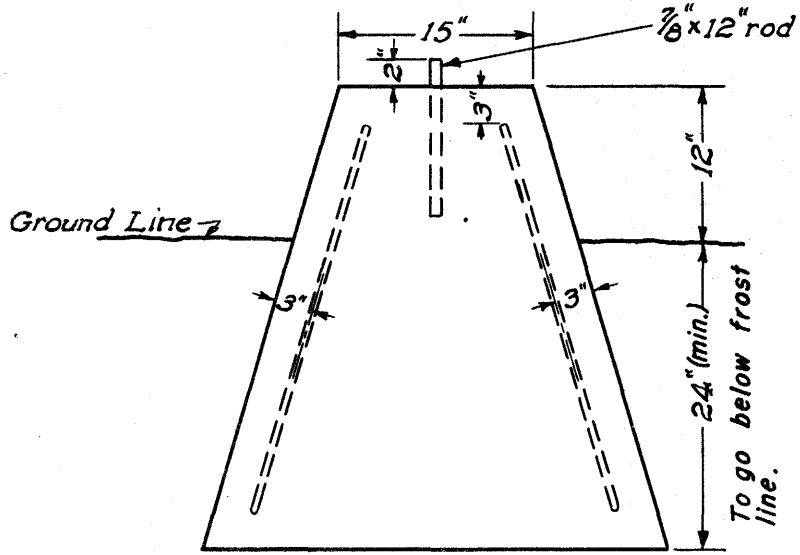

ELEVATION

Note:-
Use 1½" chamfer strips on all exposed corners.

STRUCTURES FOR CABLEWAYS

STEEL POST SUPPORT FOOTING

Designed in Tacoma District

PLATE 19-A

U.S. DEPARTMENT OF INTERIOR

GEOLOGICAL SURVEY

NOTE: Use 2 sets of bracing up to length of 12 feet, 3 sets of bracing up to length of 23 feet and 4 sets of bracing for lengths over 23 feet. No bolt holes in the bracing to be closer than 2 in. to any edge of timber.

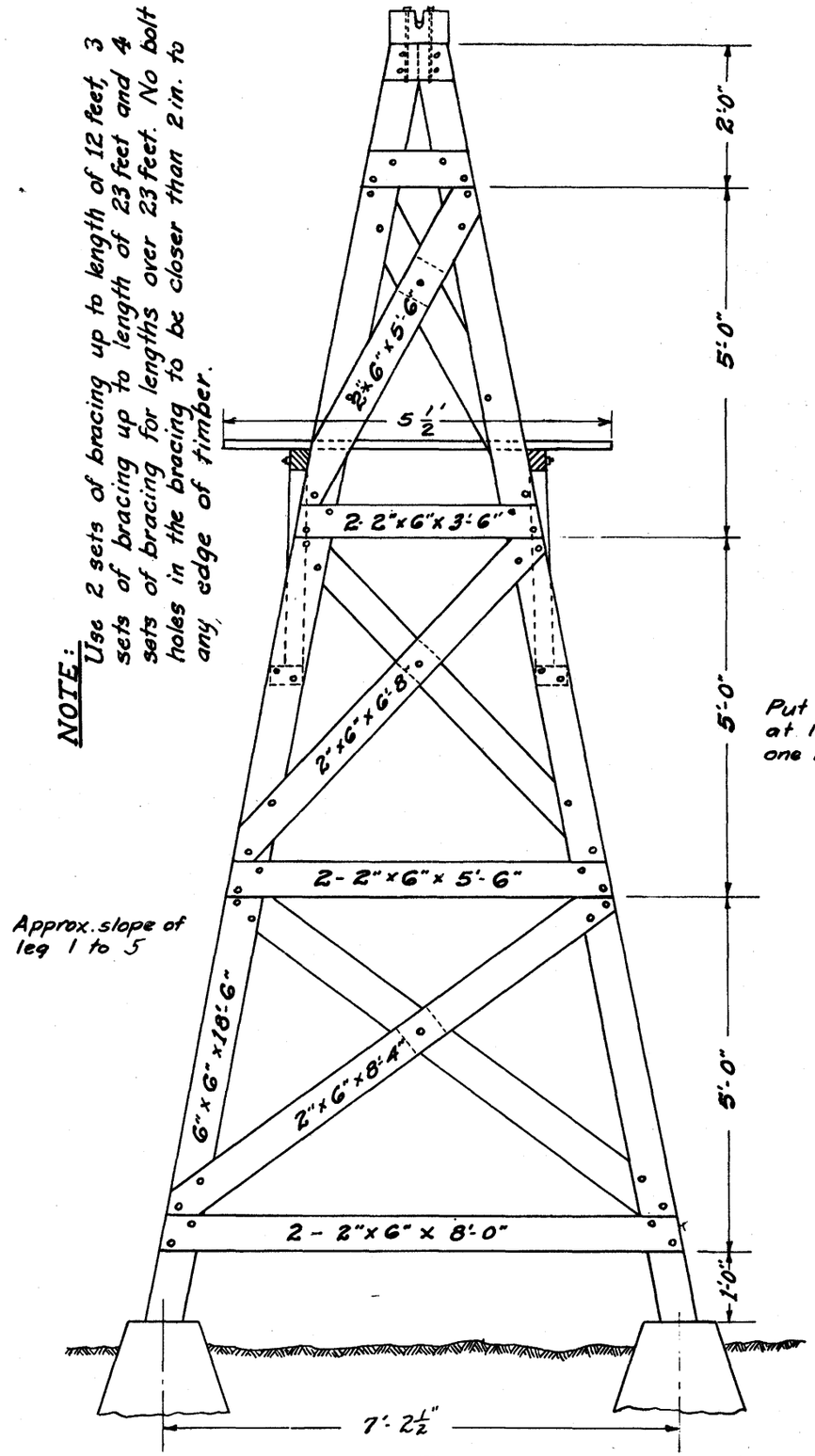

Put 5/8" pole steps at 15" ctrs. on one A-frame leg.

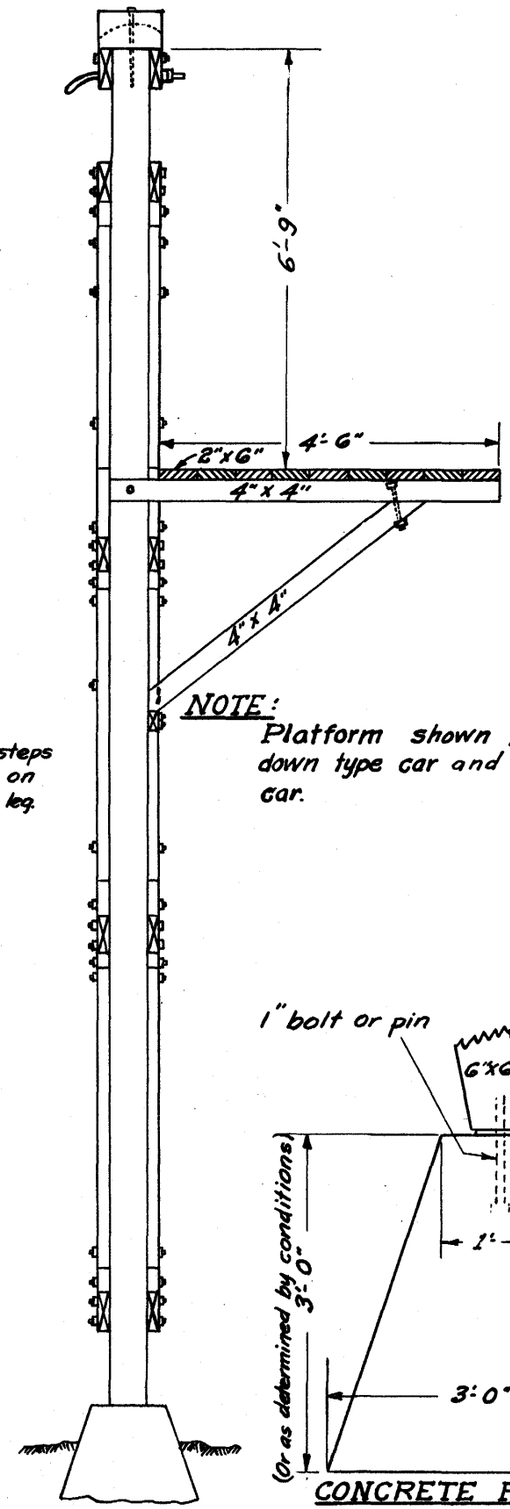

NOTE: Platform shown for sit-down type car and stand-up car.

Maximum length of Timbers to be used for Cables

Cable \ Timbers	Thickness of unsupported dimension 4"	6"	8"	10"
1 1/4" Imp. Plow steel Tra.	9'	18'	30'	39'
1" " " " "	12'	23'	31'	39'
7/8" " " " "	14'	23'	31'	39'
3/4" " " " "	15'	23'	31'	39'
1/d max. length limit	15'	23'	31'	39'

NOTE: Wood saddle as shown below to be used with 6×7 × 6×19 cables only. Specially designed steel saddle to be used with tramway strand cables. Wood saddle shown to be made of 5 1/2"×9"×10" maple block grooved to fit cable so that compression will be across the grain. Groove to be 1/16" larger in dia. at the bottom and 1/8" larger at the top than the dia. of the cable.

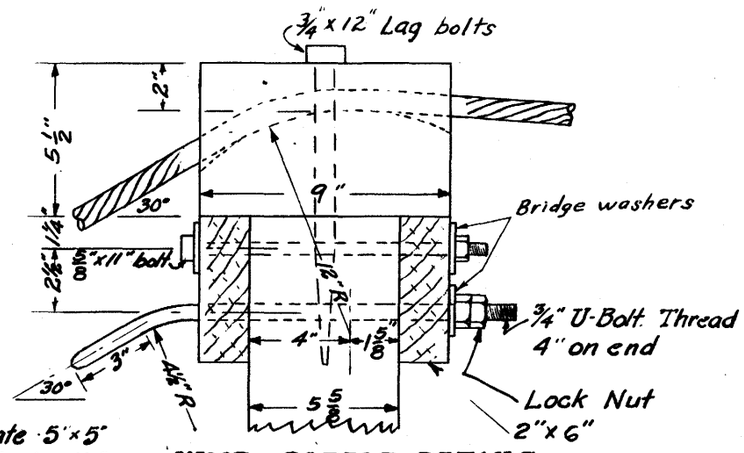

WOOD SADDLE DETAILS

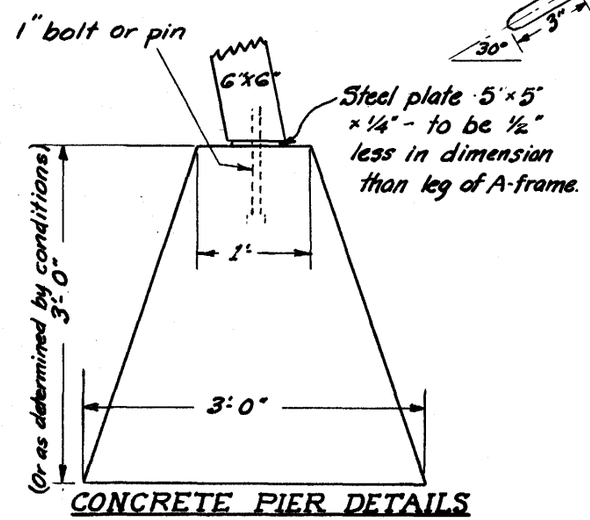

CONCRETE PIER DETAILS

STRUCTURES FOR CABLEWAYS

TIMBER A-FRAMES

Designed in Tacoma District

PLATE 20

Designs for steel A-frames with hinge-pin connections at the base that were prepared in the Columbus district office are shown in the following illustrations:

Plate 14. Steel A-frames, 10 and 15 feet.

Plate 15. Steel A-frames, 20 and 25 feet.

Plate 16. Steel A-frame, 30 feet.

Plate 17. Steel A-frame, 35 feet.

Plate 18. Steel A-frame, 40 feet.

Steel details for rigid A-frames for heights ranging from 12 to 20 feet by increments of two feet, and for heights ranging from 20 to 39 feet by increments of one foot, have been prepared in the Tacoma district office. Those designs use light-weight channel sections. The base plates are attached to the footings by fixed anchor bolts.

Steel post support

The Boston and Tacoma districts have made successful use of a single H-beam-strut support with upstream and downstream guy cables. This type of support is simple and economical, especially for short spans. The design of this type of support as used in the Tacoma district is shown in plate 19, a few changes having been made in the design that was first prepared and used in the Boston district.

Timber A-frames

In some instances it is desirable and economical to use timber A-frames. If the proper timber is used, such as Douglas fir or Oregon pine, timber A-frames may give satisfactory service for many years. The individual pieces of the frame after being cut and fitted, but before joined to the completed frame, should be treated with suitable preservatives. Helpful information in regard to the use of timber and methods of its preservation has been published by the Forest Products Laboratory of the U. S. Department of Agriculture 20/. Plans for timber A-frames designed in the Tacoma district office are shown in plate 20.

Footings

The footings should have ample bearing surface and be designed so that there will be a uniform distribution of the load. They should be placed on firm ground and, where frost is prevalent, they should extend to bedrock or to a depth of not less than two feet below the frost line. Dimensions of three feet in width and a minimum length of four feet in the direction at right angles to the cableway are sometimes specified.

20/ Wood Handbook, Forest Products Laboratory, U. S. Dept. of Agriculture. 1935.

In most circumstances where the ground is firm, the safe bearing capacity of the soil will not be exceeded with footings of that size although precautions should be taken to avoid the possibility of unequal settlement such as might occur if one part of the footing is on ledgerock and another part is on soil. Table 4 gives the maximum allowable soil pressure for different material as listed by Douglas 21/.

Table 4. Allowable soil pressure in tons (2,000 pounds) per square foot.

Material	Maximum allowable pressure Tons per sq. ft.
Alluvial soil	1
Soft clay	2
Wet clay; soft wet sand	2
Moderately dry sand; fine sand, clean and dry	3
Clay and sand in alternate layers	3
Fine and dry loam or clay; hard dry clay or fine sand	5
Compact coarse sand; stiff gravel	6
Coarse gravel; stratified stone and clay; rock inferior to best brick masonry	8
Gravel and sand well cemented	10
Good hardpan or hard shale	10
Good hardpan or hard shale unexposed to air, frost, or water	15
Very hard native bedrock	25

Anchor bolts should extend into the concrete for a distance of 30 times their diameter and should have 3-inch hooks at the end. Footings and anchorages for high steel A-frames and for towers carrying cableways of long span should be individually designed for the loads to be carried and the conditions at the site. Designs for standard footing that may be used in ordinary circumstances are shown in the plans for A-frames.

Unless otherwise specified, the design and construction of concrete footings should be in accordance with the specifications in "Recommended Practice and Standard Specifications for Concrete and Reinforced Concrete" as given in Proceedings, ASCE, No. 6, Part 2, June 1940.

Grounding

As a safety precaution, steel towers or A-frames if near the gage should be grounded to the lower intake pipe by means of grounding connectors. If the structure is at some distance for the gage it should be grounded by burying six loops of ground wire to a depth corresponding to that of the minimum stage of the river. The ground wire should be continued in a trench to a connection with the tower or A-frame. If this method of making a ground connection is impracticable, four 3/4 -inch by 8-feet clean g.i. pipes spaced six feet apart, driven full length vertically and connected in parallel, should give a sufficiently good ground.

21/ Douglas, Walter J., Foundations and earthwork: Am. Civil Engrs. Handbook. p. 711. Fifth ed. 1930.

Bearings at tops of supports

Several different designs of bearings at the tops of the supports are used for the wire rope or track strand, the particular design depending largely upon the height and construction of the tower or A-frame and the load to be carried. Some of the common methods of support are sheaves, pin connections, and saddles.

Sheaves

Sheaves are commonly used on timber or steel A-frames for the smaller sizes of wire rope. The sheave should have a solid web, not dished, with a tread diameter of eight inches and a U-groove of a diameter equal to the diameter of the rope. The diameter of the steel bolt that carries the sheave should be 1 1/8 inches for 3/4 -inch rope and 1 1/2 inches for 7/8 -inch or 1 -inch rope. Sheaves with V-shaped grooves designed for rope drive should not be used for bearing supports.

Pin connections

Pin-and-socket connections (see p. 29) shown in the designs for steel A-frames, plates 14 to 18, are commonly used for the smaller sizes of tramway track strand as the stiffness of the strand does not permit the use of sheaves. If pin-connection supports are to be used, a careful determination of the length of the clear span is necessary in order to obtain the correct sag with the A-frames in a vertical position.

Saddles

Saddles are generally used on towers (see pls. 10 to 13) and they may be used on timber or steel A-frames. They are particularly necessary for long spans and the larger sizes of tramway track strand. A cast-iron saddle is sometimes used on A-frames, but a saddle of suitable wood, such as gray Australian iron bark with the grain vertical, is preferable. The design of a saddle that was used on the towers shown in plate 12 for a 1 3/8 -inch tramway track strand is shown in plate 13.

Gaging cars

The cableway provides a track for the operation of a gaging car from which the engineer works in the process of making a discharge measurement. Two types of gaging cars are in general use; these are the type-A or sit-down car and the type-B or stand-up car. A combination car that has some features of both the type-A and the type-B cars is used in some districts; a canvas shelter or galvanized sheet-steel metal roof can be installed on either type of car. Special designs of cars may be needed for long-span cableways. In the type-A car, the reel is generally used at the end of the car whereas the type-B car is generally designed for the reel at the side, although in some type-B cars the reel may be placed at the end.

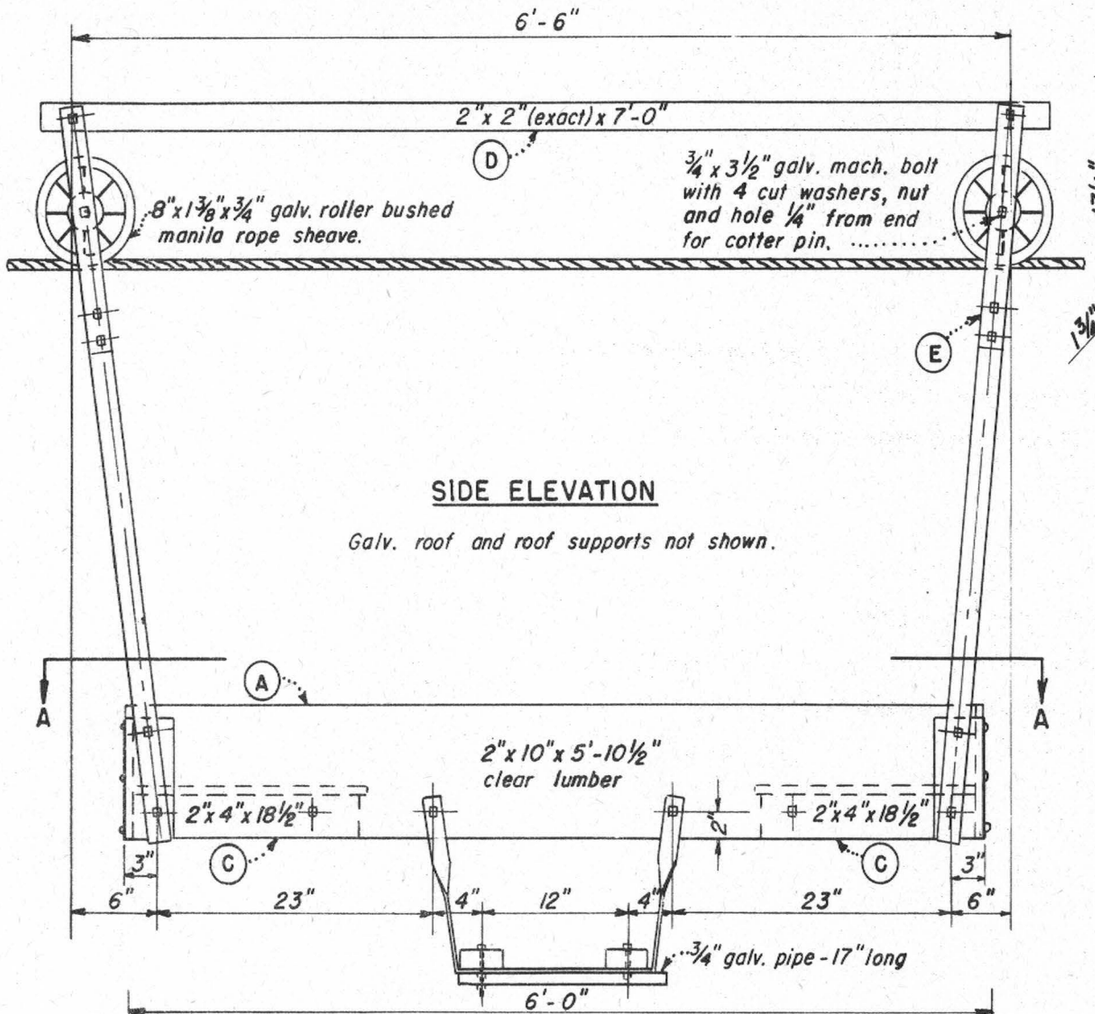

SIDE ELEVATION

Galv. roof and roof supports not shown.

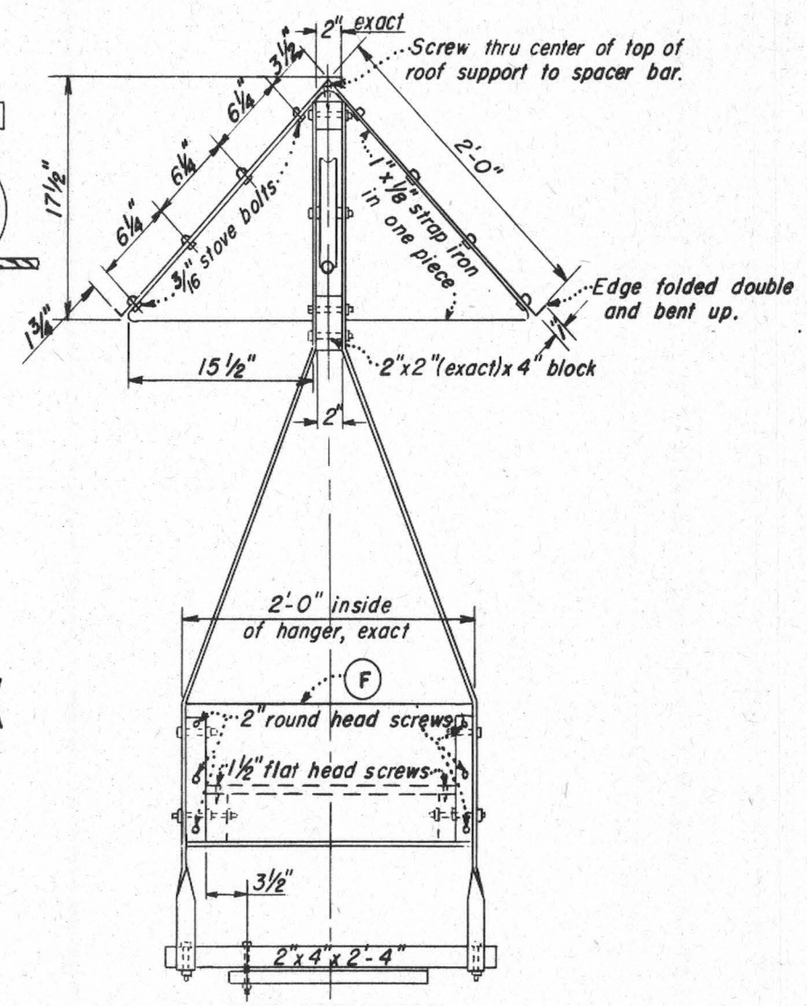

END ELEVATION

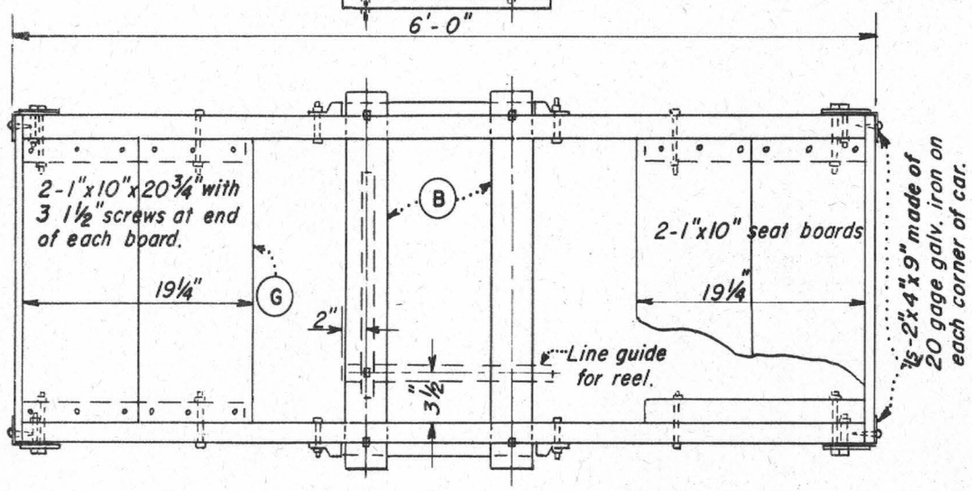

SECTION A-A

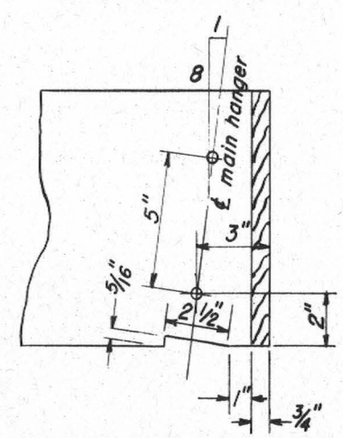

LAYOUT FOR CORNER OF CAR

STRUCTURES FOR CABLEWAYS

GAGING CAR

TYPE-A (with roof)

Designed in Portland District

PLATE 21

Type-A gaging car

The type-A car permits the engineer to work from a sitting position. It is provided with a seat at each end, has either one or two foot rests, and can be readily equipped for use with either a handline or a reel assembly. Plates 21 and 21a give the dimensions, construction details, and bill of materials for a type-A gaging car that is used in the Portland district.

Type-B gaging car

The type-B car is designed so that the engineer may operate the current meter from a standing position; several designs of this type of car are available. The design made in the Columbus district that is shown in plate 22 uses structural aluminum, except for a few steel parts and a wood floor. It is of durable construction and is especially adapted for the use of heavy equipment.

The type-B car shown in plate 23 was designed in the Tacoma district and is made of wood, except for the hangers and other hardware. With this car, the engineer can also operate the current meter from a sitting position if desired. The design includes a sheet-metal roof that may be used with this and other types of gaging cars. Another design of a type-B car that is used in the Tucson district is shown in plate 24.

Accessories

Among the accessories that are commonly used with gaging cars, the sounding protractor, the puller, and the brake are perhaps the most useful. A brake is very essential for a car operated on a cableway having a deep sag. One method of providing a brake by means of a counterweight is described on page 3.

In discharge measurements of rivers that are deep and swift where the sounding weight and the current meter are carried downstream by the action of the current, an accurate measurement of the vertical angle made by the suspension line is essential to the correct determination of the vertical depth. A triangular type of sounding protractor 22/ for measuring vertical angles is generally used on type-B cars.

Gaging-car pullers provide a convenient means of moving the gaging car and holding it at any desired position along the cableway; various designs of pullers are used by Survey engineers. The type of puller designed and used in the Tucson district is shown in plate 25. A cast-aluminum puller which has the advantage of lightness of weight is used in some districts.

22/ See "Sounding protractor," U. S. Geol. Survey Water-Supply Paper 888, p. 206.

26267

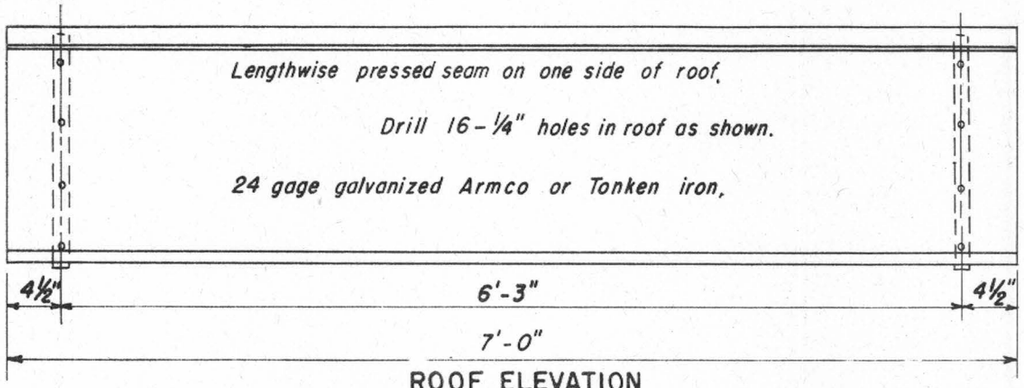

ROOF ELEVATION

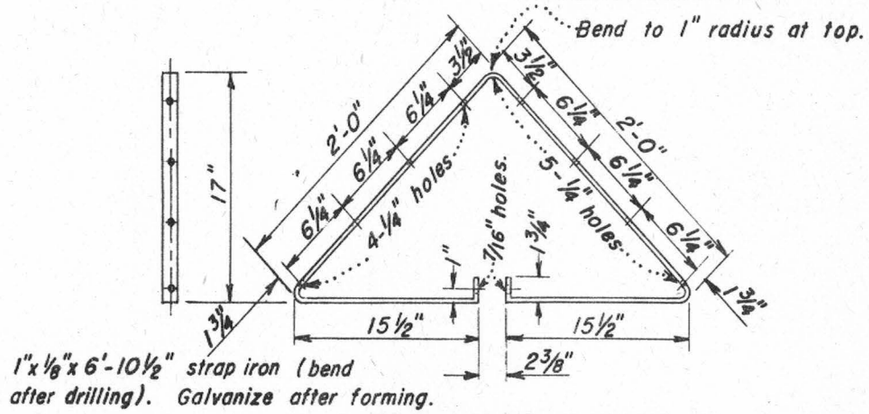

DETAIL ROOF SUPPORT

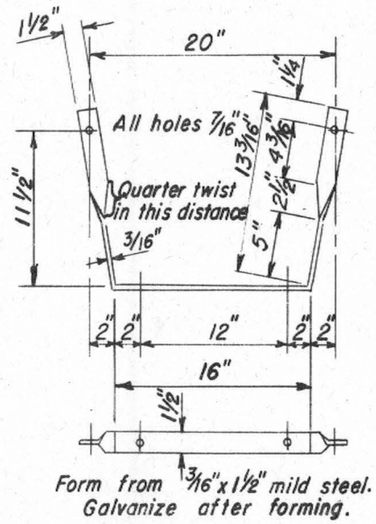

DETAIL FOOT REST HANGER

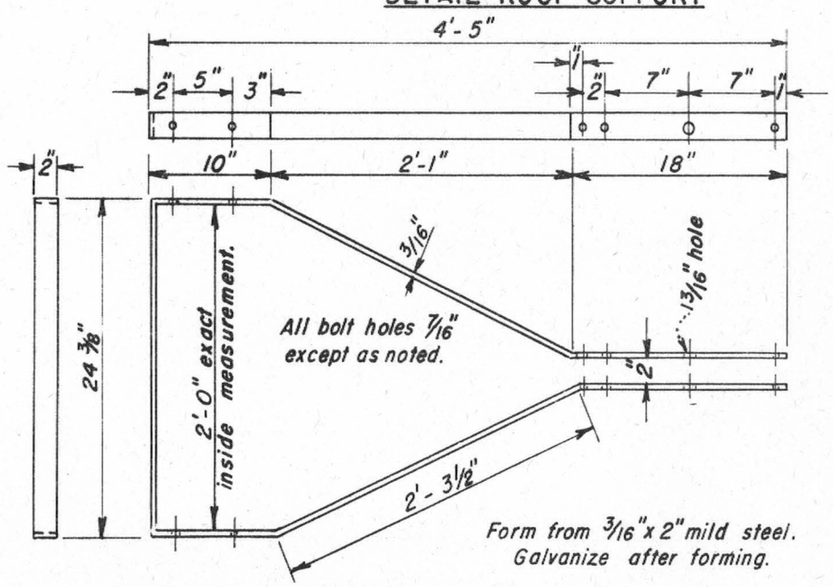

DETAIL MAIN HANGER

BILL OF MATERIALS FOR ONE SIT DOWN TYPE GAGING CAR AND ROOF (OPTIONAL)

SYMBOL	DESCRIPTION	No. REQ.
	LUMBER, ALL S4S	
A	2"x 10"x 5'-10 1/2" C CLEAR	2
B	2"x 4" x 2'-4" NO. 1 COMMON	2
C	2"x 4"x 18 1/2" NO. 1 COMMON	4
D	2"x 2" (EXACT) x 7'-0" C CLEAR	1
E	2"x 2" (EXACT) x 4" C CLEAR	2
F	1" x 10" x 2'-0" C CLEAR	2
G	1" x 10" x 20 3/4" C CLEAR	4
	HARDWARE	
3/8" GALV. MACHINE BOLTS, 9@4", 6@3", 12@2 1/2"		27
3/8" GALV. CUT WASHERS		27
1 1/2" FLAT HEAD BRASS SCREWS		24
GALV. MAIN HANGERS AS DETAILED		2
GALV. FOOT REST HANGERS AS DETAILED		2
8"x 1 3/8"x 3/4" GALV. ROLLER BUSHED MANILA ROPE SHEAVES		2
GALV. 3/4"x 3 1/2" MACHINE BOLTS - PIN DRILLED - COTTER PIN		2
3/4" GALV. CUT WASHERS		8
OPTIONAL	GALV. ROOF SUPPORTS AS DETAILED	2
OPTIONAL	GALV. ROOF AS DETAILED	1
OPTIONAL	3/16" x 1/2" GALV. STOVE BOLTS	16
6" x 9" GALV. 20 GAGE IRON BENT TO 2"x 4"x 9" ANGLE		4
2" ROUND HEAD BRASS SCREWS		14
GALV. ANCHOR ARM (SEPARATE DRAWING)		1 OR 2
GALV. BOLTS OR LAG SCREWS FOR ANCHOR ARM(S)		
PADLOCK (TO BE FURNISHED BY U.S.G.S.)		1

SPECIFICATIONS

LUMBER: PIECES TO BE CUT AND DRILLED, THEN PRIMED WITH COAT OF EQUAL PARTS LINSEED OIL AND GRAY OUTSIDE PAINT AND FINISHED WITH TWO COATS OF GRAY OUTSIDE PAINT, BEFORE ASSEMBLY.

HANGERS AND ROOF SUPPORTS: TO BE GALVANIZED.

BOLTS: GALV.- MACH., ONE NUT AND WASHER LACH, EXCEPT SHEAVE BOLTS.

SCREWS: BRASS.

SHOP ASSEMBLY OF CAR, WITHOUT ROOF, REQUIRED CAR TO BE PREPARED FOR SHIPMENT WITH HANGERS, SPACER BAR, FOOT REST BARS, AND BOLTS REMOVED AND WIRED TO BOX.

STRUCTURES FOR CABLEWAYS

GAGING CAR

TYPE-A (with roof)

BILL OF MATERIALS

Designed in Portland District

PLATE 21-A

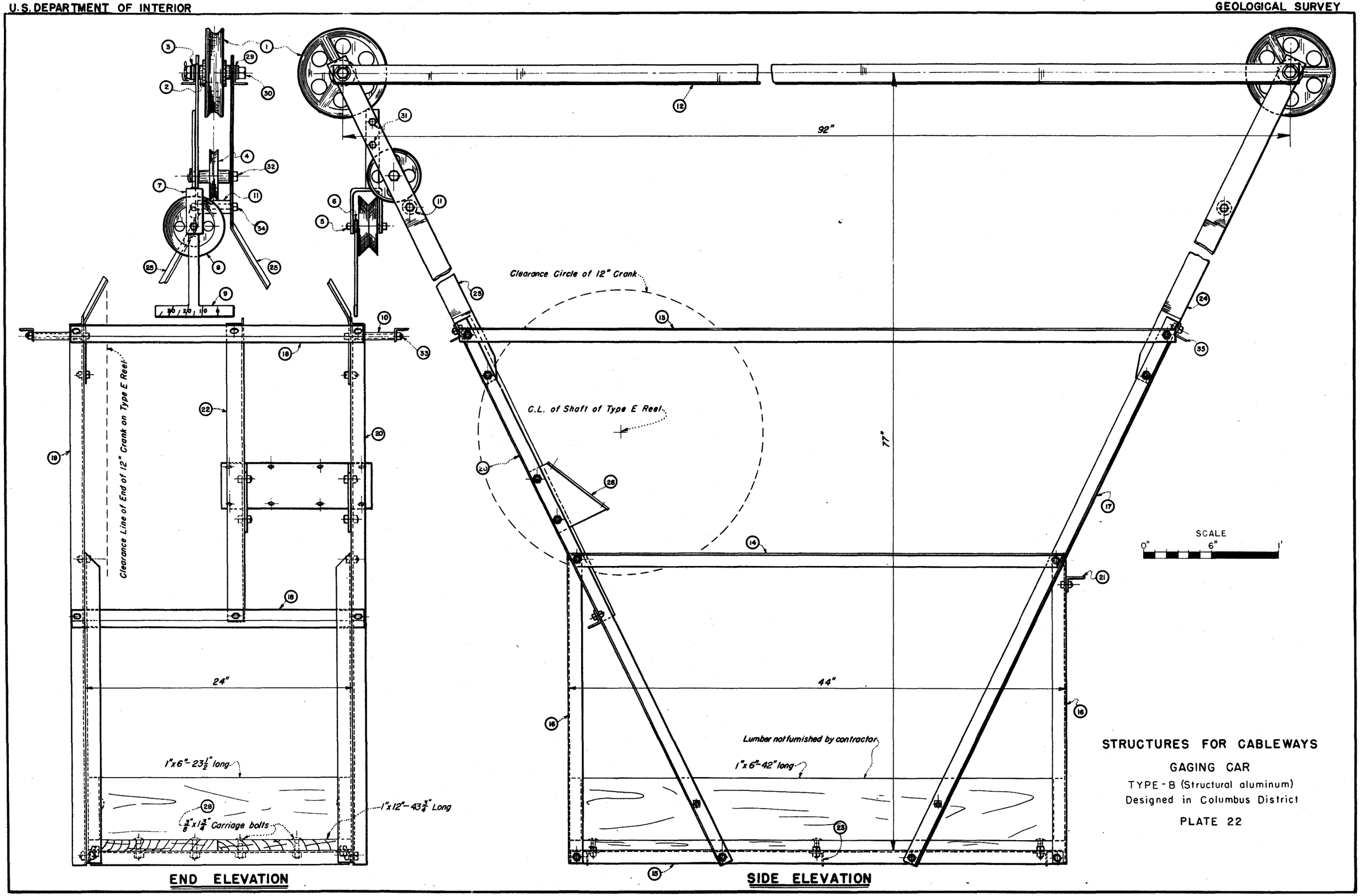

STRUCTURES FOR CABLEWAYS

GAGING CAR

TYPE-B (Structural aluminum)

Designed in Columbus District

PLATE 22

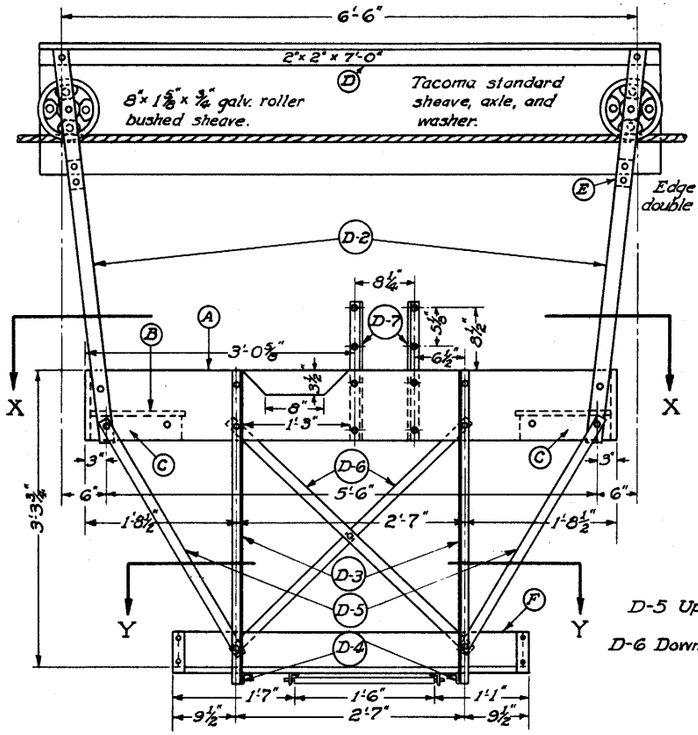

SIDE ELEVATION

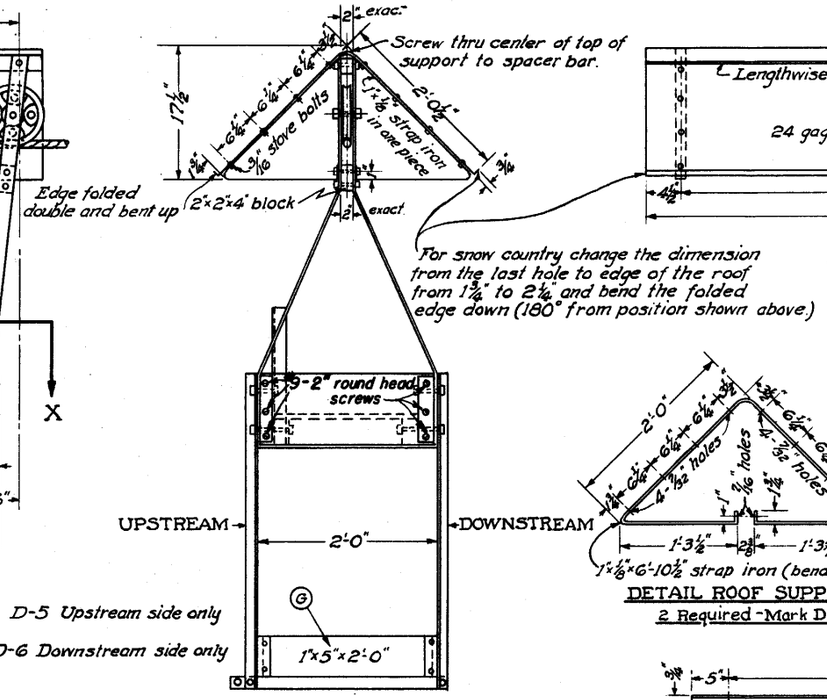

END ELEVATION

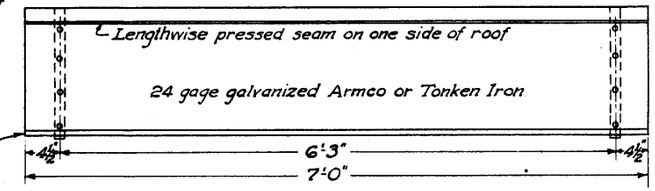

ROOF ELEVATION

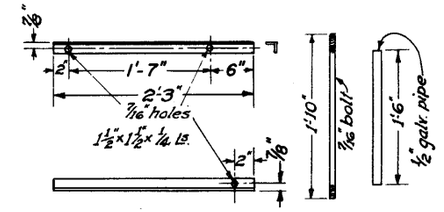

DETAIL PIPE SUPPORT
2 Required - 1 L.H. - 1 R.H.
Mark D-8

PIPE & BOLT
1 Required

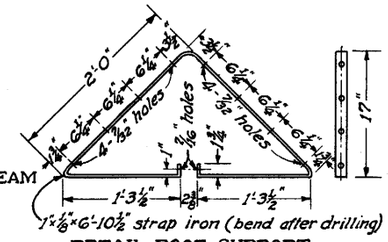

DETAIL ROOF SUPPORT
2 Required - Mark D-1.

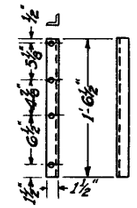

DETAIL REEL SUPPORT
2 Required - 1 L.H. - 1 R.H. - Mark D-7.

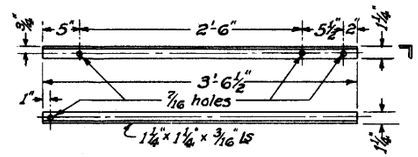

DETAIL LOWER HANGER
4 Required - 2 L.H. - 2 R.H. - Mark D-3.

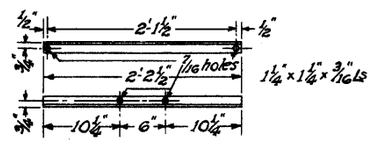

DETAIL FLOOR ANGLES
2 Required - Mark D-4

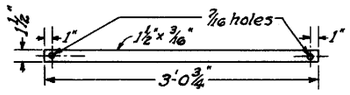

DETAIL HANGER BRACE
2 Required - Mark D-5

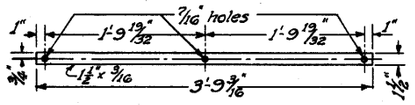

DETAIL HANGER BRACE
2 Required - Mark D-6.

BILL OF MATERIALS FOR ONE STAND-UP TYPE GAGING CAR

SYMBOL	DESCRIPTION	NO. REQD.
A	2"×10"×5'-10½" clear S4S	2
B	1"×12"×1'-8¾" No.1 common S4S	2
C	2"×4"×11" " " " "	4
D	2"×2"×7'-0" exact dimension "	1
E	2"×2"×4" " " "	2
F	1"×5"×4'-2" clear "	2
G	1"×5"×1'-11⅝" " "	2
H	1"×12"×4'-2" " "	2
I	1"×10"×2'-0" " "	2
	HARDWARE, ETC.	
	⅜"×4" Machine bolts - galvanized.	4
	⅜"×3" " " - " .	10
	⅜"×2½" " " - " .	18
	⅜"×1½" " " - " .	8
	⅜"×1" " " - " .	4
	⅜"×¾" " " - " .	6
	7/16"×1½" Stove bolts	16
	#9 round head screws 2" long.	28
	3d and 6d galv nails as required.	
D-1	Roof supports as detailed.	2
D-2	Main hanger " " .	2
D-3	Lower " " " .	4
D-4	Floor angles " " .	2
D-5	Hanger brace " " .	2
D-6	" " " " .	2
D-7	Reel supports " " .	2
D-8	Pipe supports " " .	2
	Pipe and bolt " " .	1
8"×1⅞"×¾"	Sheaves - galv. roller bushed manila rope.	2
Sheave	Axle and washer - Tacoma plan II C1C2c	2
	⅜" cut steel washers galv.	27
	¾" " " " " .	4
D-9	6"×9" galv. sheet iron bent to make L 2"×4"×9"	4
D-10	3"×5" " " " " " " L 1½"×1½"×5"	4
	Galvanized Armco or Tonken Iron roof as detailed	1
	Lock bar with bolts or lag screws as required	1
	Padlock.	1

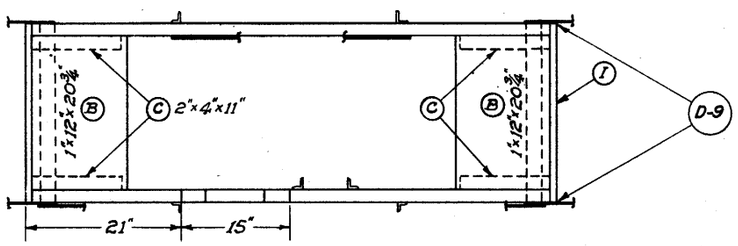

SECTION X-X.

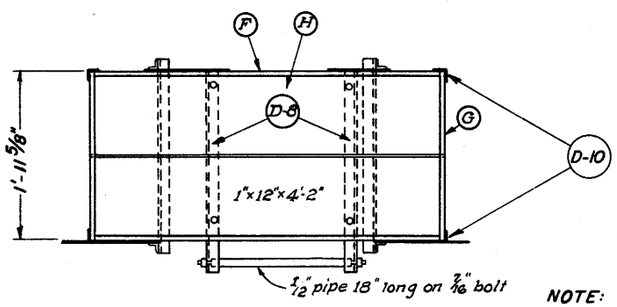

SECTION Y-Y

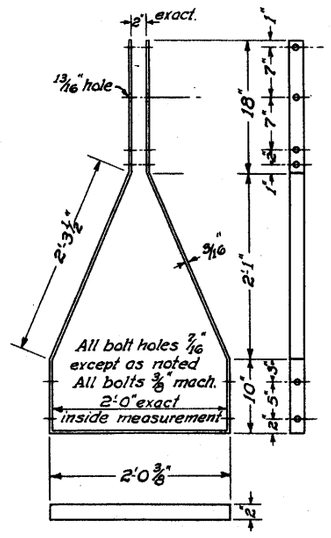

DETAIL MAIN HANGER
2 Required - Mark D-2.

NOTE:
Plan for special support permitting use of Canfield reel with this cable car is available in Tacoma District files, Drawing No. II C1C1b.
See Tacoma District drawing No. II C1C2c for details of cable-car sheave, axle and washer.

NOTES

Lumber: To be a good grade of durable wood; primed with coat of equal parts of boiled linseed oil and light lead color outside paint; finished with two coats of light lead color outside paint.
Metal surfaces: All metal parts to be galvanized by the hot-dip process after bending and drilling.

SCALE
0" 6" 1' 2' 3'

STRUCTURES FOR CABLEWAYS

GAGING CAR

TYPE-B (with roof)
Designed in Tacoma District

PLATE 23

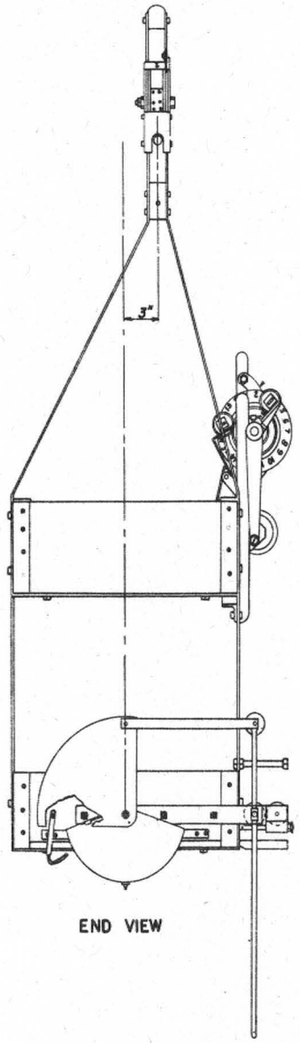

END VIEW

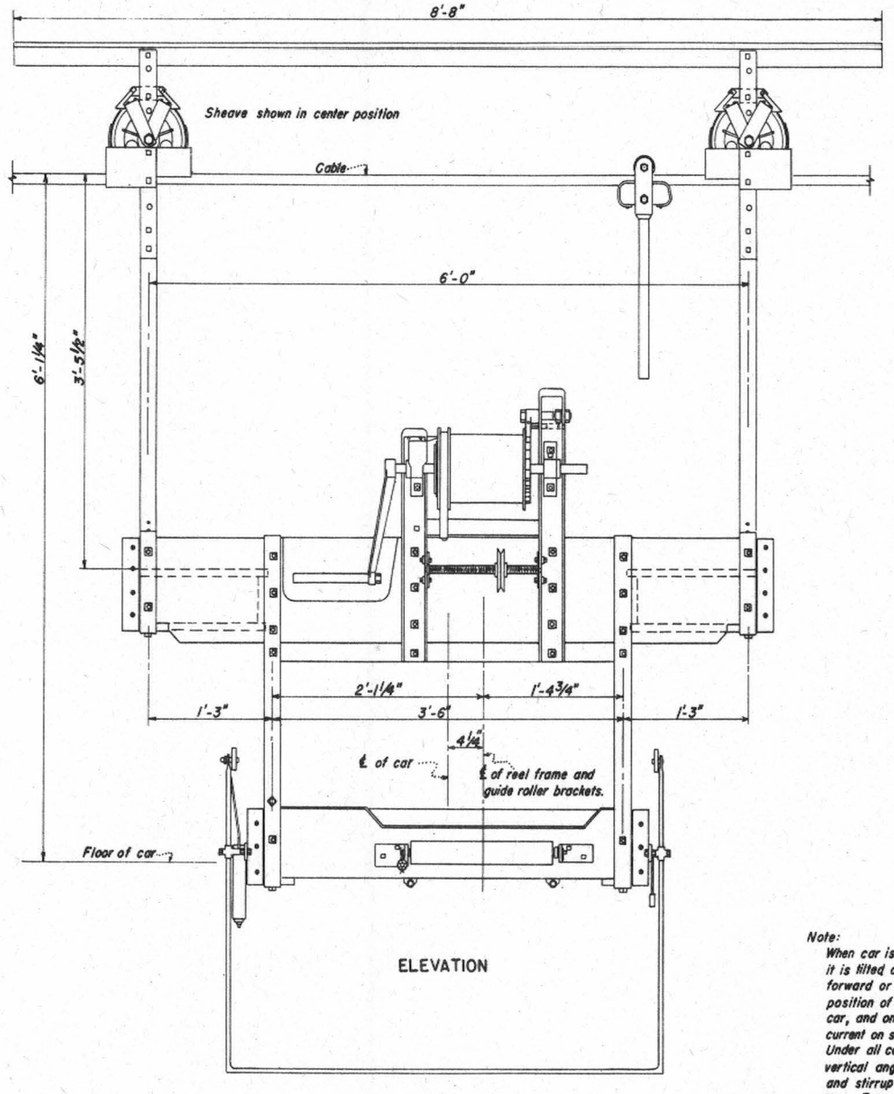

ELEVATION

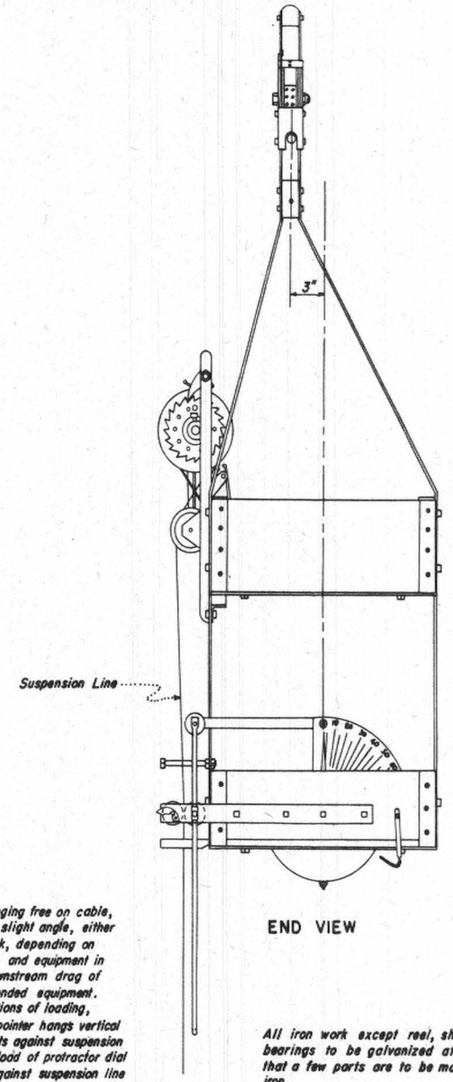

END VIEW

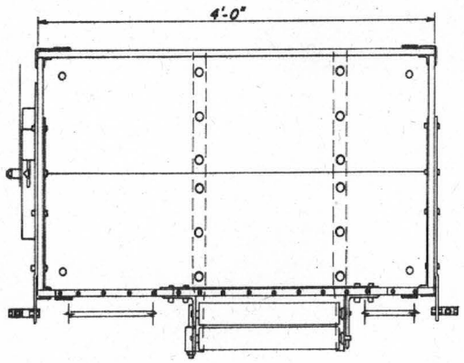

PLAN OF LOWER BOX

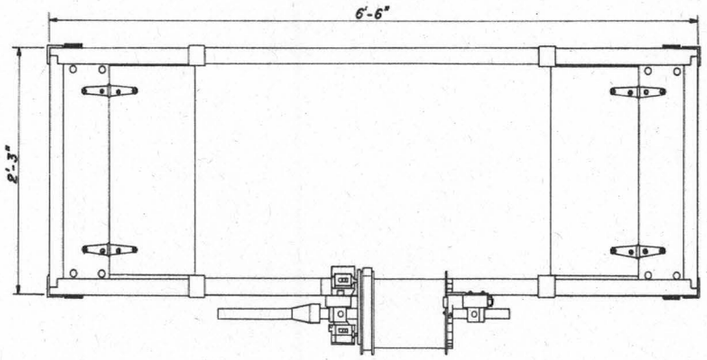

PLAN OF UPPER BOX

Note:
When car is hanging free on cable, it is tilted at a slight angle, either forward or back, depending on position of men and equipment in car, and on downstream drag of current on suspended equipment. Under all conditions of loading, vertical angle pointer hangs vertical and stirrup rests against suspension line. Eccentric load of protractor dial holds stirrup against suspension line even when car is tilted backward.
Detail drawings on file in Tucson District Office.

SCALE
0" 3" 6" 9" 1' 2'

All iron work except reel, shaft and parts used as bearings to be galvanized after parts are made except that a few parts are to be made from galvanized sheet iron.
All wood work to be painted one coat of French gray before assembling, followed by two additional coats after car is complete.
Wherever practicable, where two parts are placed permanently together, both faces to be painted before joining.

STRUCTURES FOR CABLEWAYS

GAGING CAR

COLORADO RIVER TYPE

Designed in Tucson District

PLATE 24

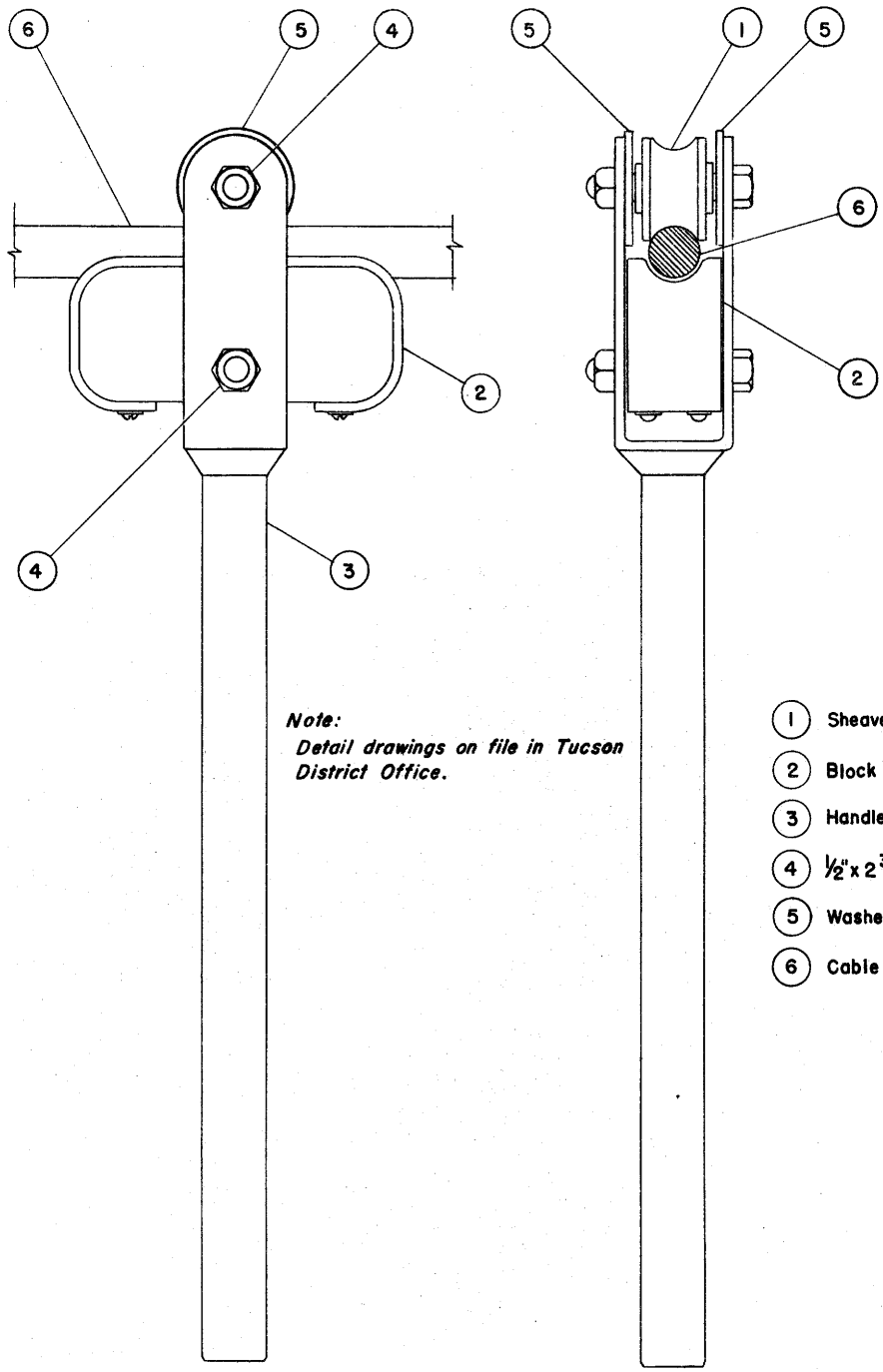

Note:
Detail drawings on file in Tucson District Office.

1. Sheave
2. Block
3. Handle
4. ½" x 2¾" cap screw
5. Washer
6. Cable

SCALE
0" 1" 2" 3" 4" 5" 6"

STRUCTURES FOR CABLEWAYS

GAGING CAR PULLER
COLORADO RIVER TYPE
Designed in Tucson District
PLATE 25