DMEA Form 9

UNITED STATES
DEPARTMENT OF THE INTERIOR
Defense Minerals Exploration Administration

OFFICIAL DOCKET FILE

DMEA NO. 4604

Application (Denied
(Withdrawn
(After disposition, delete items not applicable)

Contract (Terminated - not Certified
(Cancelled
(Terminated - Certified
(Royalty Agreement

This is the official contract file containing all official records of the project. The records contained in the files are checked and are arranged in this order:

Left Side

Interim Royalty Audits
Reports of Royalty Review
Certification of Discovery
Certificate of Audit (Final)
Interim Audit(s)
Report of Review
Termination Notice or Agreement
Recision Notice
Assignment of Contract
Contract Amendments (latest on top)
Contract with all exhibits and annexes
✓ Owner's Consent to Lien
Subordination Agreement
✓ Leases and assignments of leases
✓ Application and attachments
(3) Envelope for maps

Right Side

Project summary
Work completed analysis
All other material is filed in chronological order with correspondence including the following reports as checked:

Final Field Team Report (Tab)
Operator's Final Report
(2R) Interim Reports
(2R) Operator's monthly reports and all attachments (latest on top)
On-site Exam Report(s) (Tab)
(4) Settlement Sheets

When the volume of records is expected to warrant additional folders, or when convenience of reference warrants separate folders for certain records, they should be set up in this order:

Left Side

Folder No. 2: (In chron. order) Interim Summary Reports by W. O. Engineers

Right Side

Operator's Semi-Annual Report for Certified Project, Field Team Interim Reports, Operator's Monthly Report with transmittal, narrative, maps, and Field Team review.

Folder No. 3: Maps (Use pocket folder or envelope. Fold maps with title block out and show reference to related document or correspondence.)

Folder No. 4: Settlement Sheets

Folder No. 5: Drill Logs

9778

RAYMOND GODFREY
617 THIRD ST.
SAFFORD, ARIZONA

Grant Godfrey

W. D. ROPER
217 ELEVENTH ST.
SAFFORD, ARIZONA

ARROWHEAD MINING COMPANY

P. O. BOX 494,

SAFFORD, ARIZONA

OWNERS CONSENT TO LEIN

I, the undersigned, Dave Bryce hereby consent to a lein to the United States Government, not to exceed 5% of gross proceeds from all ores or concentrates sold from my four Lucky Strike Mining claims in the Lone Star District, now under lease to Richard Himebaugh and Earl Himebaugh of Winkleman Arizona.

It is understood that the above shall be for the purpose of repayment of any money received from the Defense Minerals Exploration Administration by the Arrowhead Mining Co. and spent by then in the exploration ofmy Lucky Strike Mining Claims Nos. 1 2 3 and 4 in the Lone Star Mining District, Graham County Arizona.

It is further understood that this lein shall be in effect for a period of ten years from the date of contract unless the property is not certified by the Government, for production

Dave Bryce

DAVE BRYCE

Mailing Address 313-11th
Safford Ariz

Witnessed by
Dan Standard Frank

RAYMOND GODFREY
617 THIRD ST.
SAFFORD, ARIZONA

Grant Godfrey

W. D. ROPER
217 ELEVENTH ST.
SAFFORD, ARIZONA

ARROWHEAD MINING COMPANY

P. O. BOX 494
SAFFORD, ARIZONA

OWNERS CONSENT TO LEIN

I, the undersigned, Dave Bryce hereby consent to a lein to the United States Government, not to exceed 5% of gross proceeds from all ores or concentrates sold from my four lucky strike mining claims in the Lone Star District, now under lease to Richard Himebaugh and Earl Himebaugh of Winkleman Arizona.

It is understood that the above shall be for the purpose of repayment of any money received from the Defense Minerals Exploration Administration by the Arrowhead Mining Co. and spent by them in the exploration of my Lucky Strike Mining Claims Nos. 1 2 3 and 4 in the Lone Star Mining District Graham County Arizona.

It is further understood that this lein shall be in offest for a period of Ten years from the date of contract unless the property is not certified by the Government, for production.

Dave Bryce

DAVE BRYCE

Mailing Adress 313 - 11 St
Safford Ariz

RAYMOND GODFREY
617 THIRD ST.
SAFFORD., ARIZONA

Grant Godfrey

W. D. ROPER
217 ELEVENTH ST.
SAFFORD, ARIZONA

ARROWHEAD MINING COMPANY

P. O. BOX 494

SAFFORD, ARIZONA

OWNERS CONSENT TO LEIN

I, the undersigned, Dave Bryce hereby consent to a lein to the United States Government, not to exceed 5% of gross proceeds from all ores or concentrates sold from my four Lucky Strike Mining claims in the Lone Star District, now under lease to Richard Hinebaugh and Earl Hinebaugh of Winkleman Arizona.

It is understood that the above shall be for the purpose of repayment of any money received from the Defense Minerals Exploration Administration by the Arpowhead Mining Co. and spent by them in the exploration ofmy Lucky Strike Mining Claims Nos. 1 2 3 and 4 in the Lone Star Mining District, Graham County Arizona.

It is further understood that this lein shall be in effect for a period of ten years from the date of contract unless the property is not certified by the Government, for production

Dave Bryce

DAVE BRYCE

Mailing Address: 913 — 11 St
Safford Ariz

UNITED STATES
DEPARTMENT OF THE INTERIOR
DEFENSE MINERALS EXPLORATION ADMINISTRATION
WASHINGTON 25, D. C.

OFFICIAL FILE COPY
DMEA
RECEIVED JAN 11 1957
DATE | INITIALS | CODE

224 New Customhouse
Denver 2, Colorado

January 8, 1957

Memorandum

To: Secretary to the Operating Committee

From: DMEA Field Team, Region III

Subject: Application for DMEA Aid (Copper) Arrowhead Mining Company (Lucky Strike claims) Graham County, Arizona.

Enclosed are the original and two copies of the subject application in the amount of $110,868.83. One copy of the application is being retained in our file.

DMEA Field Team, Region III

W. M. Traver

By W. M. Traver
Executive Officer

Enclosures

MF-103
(Revised April 1952)

UNITED STATES DEPARTMENT OF THE INTERIOR
DEFENSE MINERALS EXPLORATION ADMINISTRATION
DMEA

Form Approved.
Budget Bureau No. 42-R1035.2.

DEPARTMENT OF THE INTERIOR

JAN 8 1957
REGION III
DENVER, COLORADO

APPLICATION FOR AID IN AN EXPLORATION PROJECT, PURSUANT TO DMEA ORDER 1, UNDER THE DEFENSE PRODUCTION ACT OF 1950, AS AMENDED

Not to be filled in by applicant

Docket No. 4604
Metal or Mineral Copper
Date Received 1-11-57
Estimated Cost $110,868.83
Participation (Government %)

DEPARTMENT OF THE INTERIOR
JAN 11 1957
D.M.E.A.

INSTRUCTIONS

1. *Name of applicant.*—(*a*) State here your full legal name, in the form in which you will wish to contract, and your mailing address: Arrowhead Mining Co.
Partnership
Box 494 Safford Arizona
Phone 289 Safford

(*b*) If other than an individual, add to your name above whether a corporation, partnership, etc., and the name of the State in which incorporated or otherwise organized.

(*c*) If a corporation, add to above statement, titles, names and addresses of officers.

(*d*) If a partnership, add to the above statement the names and addresses of all partners.

2. *General.*—Read DMEA Order 1, "Government Aid in Defense Exploration Projects," before completing this application. Submit this application and all accompanying papers in quadruplicate (four copies), with your name and address on each sheet of the application and on all accompanying papers. Where sufficient space is not provided on the form for all required information, state it on an accompanying paper, with a reference in each case to the instruction to which it refers by number. Comply with all applicable instructions; or, if not applicable, so state. File the application with Defense Minerals Exploration Administration, Department of the Interior, Washington 25, D. C., or with the nearest field executive officer thereof.

3. *Applicant's property rights.*—(*a*) State the legal description of the land upon which you wish to explore, including all land which you possess or control that may be benefited by the exploration, and excluding any land or interest in land which is not to be included in the exploration project contract
See Schedule

(*b*) State any mine name by which the property is known.

(*c*) State your interest in the land, whether owner, lessee, purchaser under contract, or otherwise
See Schedule Owners consent to lien enclosed

(*d*) If you are not the owner, submit with this application a copy of the lease, contract, or other document under which you control the property.

(*e*) If you own the land, describe any liens or encumbrances on it
See Schedule

(*f*) If the land consists of unpatented claims, add to the description above, the book and page numbers for each recorded location notice.

4. *Physical description.*—(*a*) Describe in detail any mining or exploration operations which have been or now are being conducted upon the land, including existing mine workings and production facilities. State your interest, if any, in such operations. Also describe accessibility of mine workings for examination purposes.

(*b*) State past and current production, and ore reserves, if any, giving quantities and grades.

(*c*) Describe the geologic features of the property, including mineralization, type of deposit (vein, bedded, etc.), and your reasons for wishing to explore. Illustrate with maps or sketches. Send with your application (but not necessarily as a part of it) any geologic or engineering report, assay maps, or other technologic information you may have, indicating on each whether you require its return to you.

(*d*) State the facts with respect to the accessibility of the project: Access roads, distances to shipping, supply and residence points.

(*e*) State the availability of manpower, materials, supplies, equipment, water, and power.

5. *The exploration project.*—(*a*) State the mineral or minerals for which you wish to explore Copper

(*b*) Describe fully the proposed work, including a map or sketch of the property showing a plan (and cross sections if needed) of any present mine workings, and the location of the proposed exploration work as related to such features as contacts, veins, ore-bearing beds, etc.

(*c*) The work will start within 1 days and be completed within 18 months from the date of an exploration project contract.

(*d*) State the operating experience and background of the applicant with relation to the ability to carry out such exploration project, and also that of the person or persons who will supervise the operations.

6. *Estimate of costs.*—Furnish a detailed estimate of the costs of the proposed work (you will have to use a separate sheet), under the following headings. Add the totals under all headings to give the estimated total cost of the project:

(*a*) *Independent contracts.*—(Note.—If the applicant does not intend to let any of the work to contractors, write "none" after this item. To the extent that the work is to be contracted, do not repeat the cost of the contract-work in subsequent items.) State the cost of any proposed independent contracts for the performance of all or any part of the work, expressed in terms of units of work (such as per foot of drilling, per foot of drifting, per hour of bulldozer operations, per cubic yard of material moved, etc.).

(*b*) *Labor, supervision, consultants.*—Include an itemized schedule of numbers, classes and rates of wages, salaries or fees for necessary labor, supervision and engineering and geological consultants.

(*c*) *Operating materials and supplies.*—Furnish an itemized list, including items of equipment costing less than $50 each, and power, water and fuel.

(*d*) *Operating equipment.*—Furnish an itemized list of any operating equipment to be rented, purchased, or which is owned and will be furnished by the Operator, with the estimated rental, purchase price, or suggested use-allowance based on present value, as the case may be.

(*e*) *Rehabilitation and repairs.*—Furnish a detailed list showing the cost of any necessary initial rehabilitation or repairs of existing buildings, installations, fixtures, and movable operating equipment, now owned by the Operator and which will be devoted to the exploration project.

(*f*) *New buildings, improvements, installations.*—Furnish a detailed list showing the cost of any necessary buildings, fixed improvements, or installations to be purchased, installed or constructed for the benefit of the exploration project.

(*g*) *Miscellaneous.*—Furnish a detailed list showing the cost of repairs to and maintenance of operating equipment (not including initial rehabilitation or repairs of the Operator's equipment), analytical work, accounting, workmen's compensation and employers' liability insurance, and payroll taxes.

(*h*) *Contingencies.*—Give an estimate of any necessary allowances for contingencies not included in the costs stated above.

NOTE.—No items of general overhead, corporate management, interest, taxes (other than payroll and sales taxes), or any other indirect costs, or work performed or costs incurred before the date of the contract, should be included in the estimate of costs.

7. (*a*) Are you prepared to furnish your share of the cost of the proposed project in accordance with the regulations on Government participation (Sec. 7, DMEA No. 1)?

(*b*) How do you propose to furnish your share of the costs?

☐ Money ☒ Use of equipment owned by you ☒ Other

Explain in detail on acompanying paper.

CERTIFICATION

The undersigned, whether as an individual, corporate officer, partner, or otherwise, both in his own behalf and acting for the applicant, certifies that the information set forth in this form and accompanying papers is correct and complete, to the best of his knowledge and belief.

Dated January 3-57, 195__

Growhead Mining Co
(Applicant)

By Grant Coffey Partner

Title 18, U. S. Code (Crimes), Section 1001, makes it a criminal offense to make a willfully false statement or representation to any department or agency of the United States as to any matter within its jurisdiction.

U. S. GOVERNMENT PRINTING OFFICE 16—66551-1

RAYMOND GODFREY
617 THIRD ST.
SAFFORD, ARIZONA

W. D. ROPER
217 ELEVENTH ST.
SAFFORD, ARIZONA

Grant Godfrey

ARROWHEAD MINING COMPANY

P. O. BOX 494
SAFFORD, ARIZONA

MINING LEASE
3.(d)

THIS AGREEMENT, made and executed this 12 day of Jan. 1956 by and between DAVE BRYCE of Safford, Arizona, hereinafter referred to as LESSOR, and EARL HIMEBAUGH and RICHARD HIMEBAUGH, both of Winkelman, Arizona, hereinafter referred to as LESSEES.

WITNESSETH:

The Lessor, for and in consideration of the covenants and agreements of the Lessees, does by these presents lease to the Lessees the following mining claims. Lucky Strike No's 1,2,3,and 4 Located in the Lone Star Mining District, Graham County, Arizona.

The Lessees agree to pay the sum of Thirty and no/100 ($30.00) Dollars upon the execution of this agreement and ten per cent (10%) of all sales of ore taken from the leased premises, payable monthly. The lessees further agree that if the royalty does not amount to Thirty and no/100 ($30.00) Dollars in any one month that the Lessees shall pay Thirty and no/100 ($30.00) Dollars for each such month.

IT IS MUTUALLY AGREED that the Lessees shall have an option to purchase the leased premises for a period of five (5) years for the sum of Ten Thousand and no/100 $10,000.00) Dollars and that if the Lessees elect to exercise their option that all rent and royalties paid hereunder shall be credited toward the purchase price.

The Lessees agree to furnish the Lessor with copies of all settlement sheets for each shipment of ore sold.

The Lessees covenant and agree to do the annual assessment work within the time prescribed by law and to record affidavits of annual assessment work as provided by law.

The Lessees agree to ship no hand sorted or mine run ore except in car load lots, but reserve the right to ship truck load lots of mill concentrates or copper oxide recovered from leaching.

The Lessees agree to operate said mine in accordance with the laws of the State of Arizona and good mining practices, to save the Lessor harmless from any and all liens or encumbrances against the leased premises.

The Lessees agree to carry the necessary industrial insurance and other insurance required to hold the Lessor harmless from claims of industrial injuries from the labor operations of Lessees on the leased premises.

The Lessor does hereby warrant the validity of said claims and the right of the Lessees to remove ore therefrom under this lease, and the Lessor covenants and agrees to save Lessees harmless by reason of adverse claims of any other person.

It is mutually agreed that any improvements which are attached to the realty, such as buildings, tracks and timbering, shall remain on the premises if the Lessees do not exercise their option to purchase, and that all equipment which remains, personalty may be removed by the Lessees if they do not elect to purchase.

This agreement shall be binding upon the heirs,administrators, executors and assigns of the parties hereto. IN WITNESS WHEREOF, the parties have hereunto set their hands this 12 day of Jan. 1956

Dave Bryce Earl Himebaugh Richard Himebaugh

STATE OF ARIZONA County of Graham: ss-- This instrument was acknowledged before me this 12 day of Jan. 1956 by Dave Bryce.

My Commission Expires 3/4/59 Wilford R. Richardson
Notary Public

RAYMOND GODFREY
617 THIRD ST.
SAFFORD, ARIZONA

Grant Godfrey

W. D. ROPER
217 ELEVENTH ST.
SAFFORD, ARIZONA

ORIGINAL FILE COPY
DMEA
RECEIVED JAN 11 1957
DATE INITIALS CODE

ARROWHEAD MINING COMPANY

P. O. BOX 494
SAFFORD, ARIZONA

1. (b)
(c) Not a corporation
(d) Grant Godfrey-- Smiths Dairy Farm 1&½ miles north ~~88~~ Safford Arizona. Post Office box 494 Safford Arizona.
Raymond Godfrey 617 Third St. Safford Arizona
W. D. Roper 217 Eleventh St. Safford Arizona
A. E. Roper Roper's Cabins Highway Thatcher Arizona.
Richard Himebaugh Lucky Strike Mining Claims P. O. Box 494 Safford Arizona.

2. General

3. (a) Four Lucky Strike mining claims under lease from Dave Bryce all within T. 5 S. Range 26 East Section 35 Lone Star Mining District Graham County Arizona.
(b) Lucky Strike Claims Bryce Lease.
(c) Lessee with option to purchase.
(d) See attached schedules.
(e) We do not own land. No liens or encumberances.
(f) Lucky Strike #1 Docket 19 Page 207
Lucky Strike #2 Docket 21 Page 446
Lucky Strike #3 Docket 36 Page 87
Lucky Strike #4 Docket 21 Page 446
} Graham County Court House Safford, Ariz.

4. (a) We are at present setting the hoist and constructing a head frame at the location in which we are going to sink. There are numerous prospect holes along the various outcropings of copper ore. We drove 60 feet of incline drift this summer in following a cross lead from the surface. All workings are accessible.

(b) We have shipped two cars of ore from these claims. The ore was hand sorted from the various prospect holes and from the 60 foot incline drift. It averaged above %2 Cu.

(c) Altitude 4,000 feet. Low Rolling Hills. Arid region. The mineralization is copper of the monzonite porphry type. The type of deposit is a series of veins and dikes showing on the surface running generally from east to west. The reason we wish to explore is that we believe that in depth there will be found ore of a higher grade, and at the same time by shaft sinking we will be in position to drift and cut the veins that are visible on the surface, thereby determining the grade of the ore in depth of the claims. We propose to sink the shaft in the largest exposed vein of mineralization. Sketches attached.

(d) Access roads: From framing and welding shop in Safford Arizona 4 miles paved road: From pavement turn off 8 miles to proposed shaft, improved county road. Shipping, supply and residence points 12 miles from Safford Arizona to mine shaft.

(e) Manpower-Good. Materials and supplies--Safford Ariz. Equipment--To be furnished by us. Water--We will haul our drill and camp water on our own equipment from Safford

RAYMOND GODFREY
617 THIRD ST.
SAFFORD, ARIZONA

Grant Godfrey

W. D. ROPER
217 ELEVENTH ST.
SAFFORD, ARIZONA

ARROWHEAD MINING COMPANY

P. O. BOX 494,

SAFFORD, ARIZONA

5. (bO) The proposed work is to sink a shaft at 85 degrees incline following the ore down an additional 340 feet. The shaft is now 15 ft. deep. The shaft is to be four ft. by seven ft. in the clear, timbered where necessary. See sketch for relation ofproposed work to veins andore beds, as can be seen on the surface.

We propose to drive one drift south to cut the exposed veins 800 ft. and raise to the surface on this drift.

We propose to drive one drift 600 ft. east to follow the vein we will sink on.

(d) Grant godfrey andRaymond Godfrey sunk the shatf at Denton Mine, mined at Crescent Mine as part owner for one year. W. D. Roper was mine superintendent at Royal John mine in New Mexico. Grant Godfrey worked as shaft repairman in Lone Star District for Tate Mine Contracting Co. about two months of this year; four years operating experience as part owner and leasing.

The person that will supervise the operation is one of the partners; Richard Himebaugh-- Shaftman 8 months Inspiration Copper Co. Christmas Division; Shaft lead man for Tate Mine Contracting Co. in the Lone Star Mining District; Nine years underground mining experience at Miami Copper Co. andSan Manuel as contract miner.

The four men named above worked together as miners six months last year andall of them are familiar with the Lone Star Mining District and the equipment that will be furnished and operated by us.

Our ability to sink shaft can be seen at the shaft now as we are doing the initial work of collaring off, constructing head frame, etc. which is not included in this proposed exploration contract.

We are familiar with the mining laws of the State of Arizona, andhave always cooperated with the agents of the State Mine Inspectors office on other operations conducted by us.

6. We propose to sink the shaft on the short form unit cost basis @100.00 (One hundred dollars) per foot of advance.

We propose to drive the drifts 5 x 7 in the clear @$38.20 per foot of advance.

We propose to drive the raise 4 x 7 in the clear @$35.96 per foot of advance. Detailed estimate of cost attached.

(a) Independent contracts---None.

RAYMOND GODFREY
617 THIRD ST.
SAFFORD, ARIZONA

Grant Goff

W. D. ROPER
217 ELEVENTH ST.
SAFFORD, ARIZONA

ARROWHEAD MINING COMPANY

P. O. BOX 494,

SAFFORD, ARIZONA

6.(b)

Hoist man-Top lander-2miners @ $2.30 per hour each	
29 man hours per foot	$ 66.70 ✓ ? too high.
(c)	
Electric Primers 5 per ft.	2.17 ✓
Powder 8 pounds per ft.	2.16 ✓
Lead wire per ft.	.48 ✓
Timber 100 board ft. per ft. @ 17¢	17.00 ? too high without labor
Wedges 6 per ft. @ 6½¢	.39 ✓
Lag screws 8 inch @14 ¢	.07 ✓
Hanging Rod 5 ft.	1.00 ✓
Washers 3 inch	.10 ✓
Nails	.09 ✓
2 inch pipe air	.80 ✓
2 inch pipe water discharge	.80 ✓
1 inch pipe for drill water	.45 ✓
Gas, oil and repairs	5.00 ?
Collar pipes for drill	.80 ?
Ladders	.60 ✓
Water haul for drilling	1.00 ?
Assay	.20 ×
Contingency	.19 ?
	$100.00

Detailed estimate of cost of proposed drifts per foot of advance
Drift to be 5 x 7 in the clear.

Timber @17¢ board ft.	$11.13 ? more or less
16 lb. rail @$245.00 per ton	1.28 ✓
Fish plates	.13 ✓
Bolts for track	.03 ✓
Spikes	.05 ✓
2" air pipe	.80 ✓
1" water pipe	.45 ✓
10" vent tube	1.00 ✓
Powder	2.70 ✓
Caps	.14 ✓
Fuse	.50 ✓
Loading sticks	.04 ✓
Gas	.93 ✓
Oil	.80 ✓
Water	.50 ✓
Steel bits and repair	2.00 ✓
Labor-Hoistman toplander 2 miners	14.72 ✓ ok
Contingency	1.00 ?
Total	$38.20

RAYMOND GODFREY
617 THIRD ST.
SAFFORD, ARIZONA

Geo. N. Godfrey

W. D. ROPER
217 ELEVENTH ST.
SAFFORD, ARIZONA

ARROWHEAD MINING COMPANY

P. O. BOX 494,

SAFFORD, ARIZONA

6 (c) cont.

Raise for ventilation & escape, to be 4 x 7 in the clear

Detailed estimate of cost of proposed raise per ft. of advance.

Timber @ 17¢ Board ft.	$ 11.80 ?
Ladders	.60 ✓
Wedges	.24 ✓
1 x 12	.17 ?
Pipe 2" air	.80 ✓
Pipe 1" water	.45 ✓
10 inch vent pipe	1.00 ✓
Fittings & hangers	.50 ✓
Labor, hoistman- Toplander - 2 Miners	16.00 ✓
Powder	1.80 ?
Primers electric	1.43 ✓
Lead wire	.13 ✓
Loading sticks	.04 ✓
Contingency	1.00 ✓
Total	$ 35.96 ?

6 (d)

Equipment to be purchased for Drifts and Raise

1 Compressor 105 CFM Gasoline ?	$3,400.00
1 Slusher Air ? How about a mucking machine?	2,195.00
1 Slusher ramp ?	400.00
2 Mine cars	200.00
600' Slusher cable @ 17¢ ?	102.00
1 Air tugger	1,000.00
Estimated cost of Freight	100.00
State sales tax	145.94
Total	$7,542.94

This machinery will be purchased on a rental purchase basis, purchased in Globe, Arizona 85 miles from site of mine shaft.

RAYMOND GODFREY
617 THIRD ST.
SAFFORD, ARIZONA

W. D. ROPER
217 ELEVENTH ST.
SAFFORD, ARIZONA

Frank Godfrey

ARROWHEAD MINING COMPANY

P. O. BOX 494
SAFFORD, ARIZONA

6 (d) cont.

Equipment owned and to be furnished by us-

What about depreciation?

Drill bits
Steel
3 Jackhammers
Water hose
Valves
Connections
Oiler
1 Compressor
Head frame
Sheave wheel
Mine Bucket
Hoist
Shaft hoist cable
1 Mine car
Chains
Water pump
Picks
Shovels
Blow pipe
Grizzly
2 Trucks
Gas and oil barrels
Gas Pump
2 Water tanks
1 pressure tank water
Timber saws
1 pick-up truck
Arc Welder
Aceteylene welder
Complete set Mechanics hand tools
Pipe wrenches

Doublejacks
Singlejacks
Timber axe
Hatchets
Line Level
Brace and Bits
Funnel
Blacksmith forge
Blacksmith tools
Anvil
Cable clamps
Mine blower
Vent tube 300 ft.
Hose gaskets
Wagner loader
Ore bin
Sample crusher
Miners lamps
Carbide
Hard hats
Miners boots
Pipe vise
Pipe cutters
Pipe Dies
Mine bell
Cord
Slusher bucket
Sheave blocks
Slusher pins
Water heater
Air leg

Mine skip 1 ton
STOPER

RAYMOND GODFREY
617 THIRD ST.
SAFFORD, ARIZONA

Grant Godfrey

W. D. ROPER
217 ELEVENTH ST.
SAFFORD, ARIZONA

ARROWHEAD MINING COMPANY

P. O. BOX 494

SAFFORD, ARIZONA

6 (e) Rehabilitation and repairs None

(f) New Buildings 1 combination hoist house, tool shed, and compressor building--8 ft. high 10 ft. by 24 ft. 2x4 framework covered with corrugated sheet iron.

526 Board ft. @ 17¢	$ 89.42
784 Sq. ft. iron @ 16¢	125.44
Nails 20 pounds @ 18¢	3.60
	$ 218.46
Arizona State Sales Tax @ 2%	4.37
Labor	340.00
Total	$ 562.83 ✓ (2.35/Sq. Ft.)
Leveling Ground	100.00 ✓
Powder Magazine	100.00 ✓
1 change room, cement floor 10x10x8 high @ $3.00 per sq ft floor area	300.00
Total costs of buildings	$1,062.83 ✓

(g) The repairs, will be done by ourselves and are included under operating materials and supplies (c). We will do our own accounting.

Miners base pay per shift	$18.40	
weekly overtime distribution 18.40x½x1/6	1.53	
Payroll wage per shift	$19.93	$19.93
Payroll insurance and taxes:		
O.A.S.I. @2.0% x 19.93	.40	
Industrial accident ins. @8.30%x 19.93	1.66	
Occupational disease ins. @0.58% x 19.93	.12	
State unemployment tax @2.7% x 19.93	.54	
Federal unemployment tax @0.3% x 19.93	.06	
Total tax and insurance	$3.71	3.71
Total cost per shift to operator		$23.64

6 (h) Contingency----- Contingencies included in estimates by the foot of advance.

RAYMOND GODFREY
617 THIRD ST.
SAFFORD, ARIZONA

Grant Godfrey

W. D. ROPER
217 ELEVENTH ST.
SAFFORD, ARIZONA

ARROWHEAD MINING COMPANY

P. O. BOX 494

SAFFORD, ARIZONA

6 (h) continued.

Shaft 340 ft @ $100.00 per foot	$ 34,400.00
Drift 1400 ft @ 38.20 per foot	53,480.00
Raise 400 ft @ 35.96 per foot	14,384.00
New Buildings	1,062.00
Machinery to purchased rental purchase	7,542.00
TOTAL COST OF PROPOSED PROJECT.	$110,868.83

7 (a) Yes

(b) Labor-- Four partners: Grant Godfrey, Raymond Godfrey Richard Himebaugh, and W. D. Roper.

RAYMOND GODFREY
617 THIRD ST.
SAFFORD, ARIZONA

Grant Godfrey

W. D. ROPER
217 ELEVENTH ST.
SAFFORD, ARIZONA

ARROWHEAD MINING COMPANY

P. O. BOX 494
SAFFORD, ARIZONA

3.(d)

THIS MEMORANDUM OF AGREEMENT, made and entered this 30 day of April, 1956, by and between RICHARD HIMEBAUGH, EARL HIMEBAUGH, and MATTIE L. BITTICK, all of Winkelman, Arizona, GRANT GODFREY, RAYMOND GODFREY, W.D. ROPER and A.E. ROPER of Safford, Arizona,-

Whereas, RICHARD HIMEBAUGH and EARL HIMEBAUGH are the lessors in a certain mining lease wherein DAVE BRYCE is the lessee lessors in a lease involving those certain unpatented mining claims described as Lucky Strike No. 1, 2, 3, And 4, located in the Lone Star Mining District, Graham County, Arizona; and,

Whereas, the said RICHARD HIMEBAUGH and EARL HIMEBAUGH, as well as all of the other parties hereto have located various other claims in the vicinity of the said Lucky Strike Mining Claims which locations were made in the various names of the parties hereto; and,

Whereas, all of the parties hereto, prior to this date have joined together and have formulated a plan for the joint development and promotion of all of the claims hereinafter described and have agreed on a division of interestand proceeds in all of the said mining claims. To carry out this intent and plan the parties have agreed as follows;

1. That all of the mining claims hereinafter described shall be developed, mined, improved, promoted or sold as a group for the benefit of all of the parties hereto in the specific proportions as hereinafter set forth.

2. The parties agree that from hereafter the interest of the parties hereto, in and to the claims hereafter described shall be as follows:

(a) Richard Himebaugh, Earl Himebaugh and Mattie L. Bittick an undivided one-fifth interest in said mining claims and in the mining lease on Lucky Strike Nos. 1 through 4 claims.

(b) W. D. Roper, an undivided one-fifth interest in and to said claims and in the mining lease above described.

(c) A. E. Roper, an undivided one-fifth interest in and to said mining claims and in the mining lease above described.

(d) Grant Godfrey, an undivided one-fifth interest in and to said mining claims and the mining lease above described.

(e) Raymond Godfrey, an undivided one-fifth interest in an to said mining claims and the mining lease above described. It is agreed that profits from the mining of said claims or profits from the sale or lease of said mining claims shall be divided in the proportions above described.

3. Each of the parties hereto does hereby convey, sell, assign and transfer to each of the other parties so much of his or her interest in any of the mining claims or mining lease above described, to execute the intent of this agreement and to place in each of the parties hereto that interest in the mining claims and minging lease as set forth in paragraph 2. The parties agree that any other claims located by any of the parties hereto contiguous to the claims herin shall come under the terms of this agreement.

4. The mining lease and mining claims which are the subject of this agreement are described as follows: All of said claims

RAYMOND GODFREY
617 THIRD ST.
SAFFORD, ARIZONA

Grant Godfrey

W. D. ROPER
217 ELEVENTH ST.
SAFFORD, ARIZONA

ARROWHEAD MINING COMPANY

P. O. BOX 494,

SAFFORD, ARIZONA

3.(d) Second Page*****

are located in the Lone Star Mining District of Graham County, Arizona.

(a) That certain mining lease dated January 12,1956, between Dave Bryce as Lessor and Richard Himebaugh and Earl Himebaugh as Lessees involving the four mining claims known as Lucky Strike No. 1, 2, 3, and 4.

(b)Those certain mining claims known as Gold Hill No. 1 through 35.

(c)Those certain mining claims known as Lucky Strike No. 5 through 18.

(d) Those certain mining claims known as Dos Pobres No. 1 through 28.

(e) Those certain mining claims known as Arrowhead No. 1 through 6.

(f) Those certain mining claims known as Copper Chief No. 1 through 6.

(g) Those certain mining claims known as Rico No. 1 through 3.

Dated this 30 day of April, 1956.

W. D. Roper

A. E. Roper

Grant Godfrey

Raymond Godfrey

Richard Himebaugh

Earl Himebaugh

By his attorney in fact

Mattie Bittick
By her attorney in fact

State of Arizona County of Gila--ss:

This instrument was acknowledged before me this 8 day of May, 1956, by Richard Himebaugh, individually and as attorney in fact for Earl Himebaugh and Mattie Bittick, and by W. D. Roper A. E. Roper, Grant Godfrey, and Raymond Godfrey.

Navor Proctor Notary Public

My Commission expires:
August 9, 1959

RAYMOND GODFREY
617 THIRD ST.
SAFFORD, ARIZONA

4 (c)
5 (b)

Grant Godfrey

W. D. ROPER
217 ELEVENTH ST.
SAFFORD, ARIZONA

ARROWHEAD MINING COMPANY

P. O. BOX 494
SAFFORD, ARIZONA

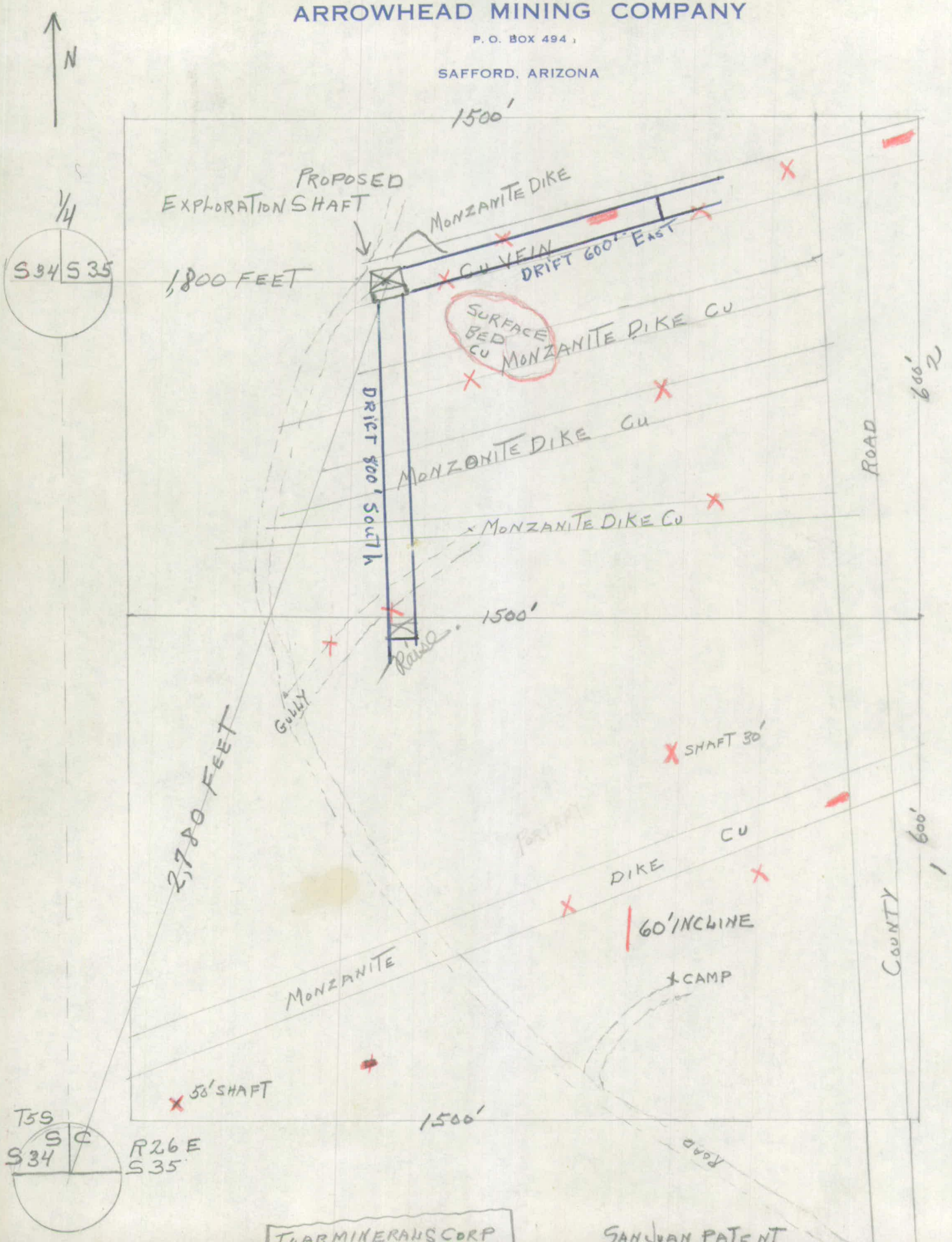

— DRIFTS To be Followed
PROSPECT HOLES AND OPEN CUTS X
SHOWING COPPER ORE IN PLACE
PORPHYRY FORMATION

RAYMOND GODFREY
617 THIRD ST.
SAFFORD, ARIZONA

W. D. ROPER
217 ELEVENTH ST.
SAFFORD, ARIZONA

Grant Godfrey

ARROWHEAD MINING COMPANY

P. O. BOX 494

SAFFORD, ARIZONA

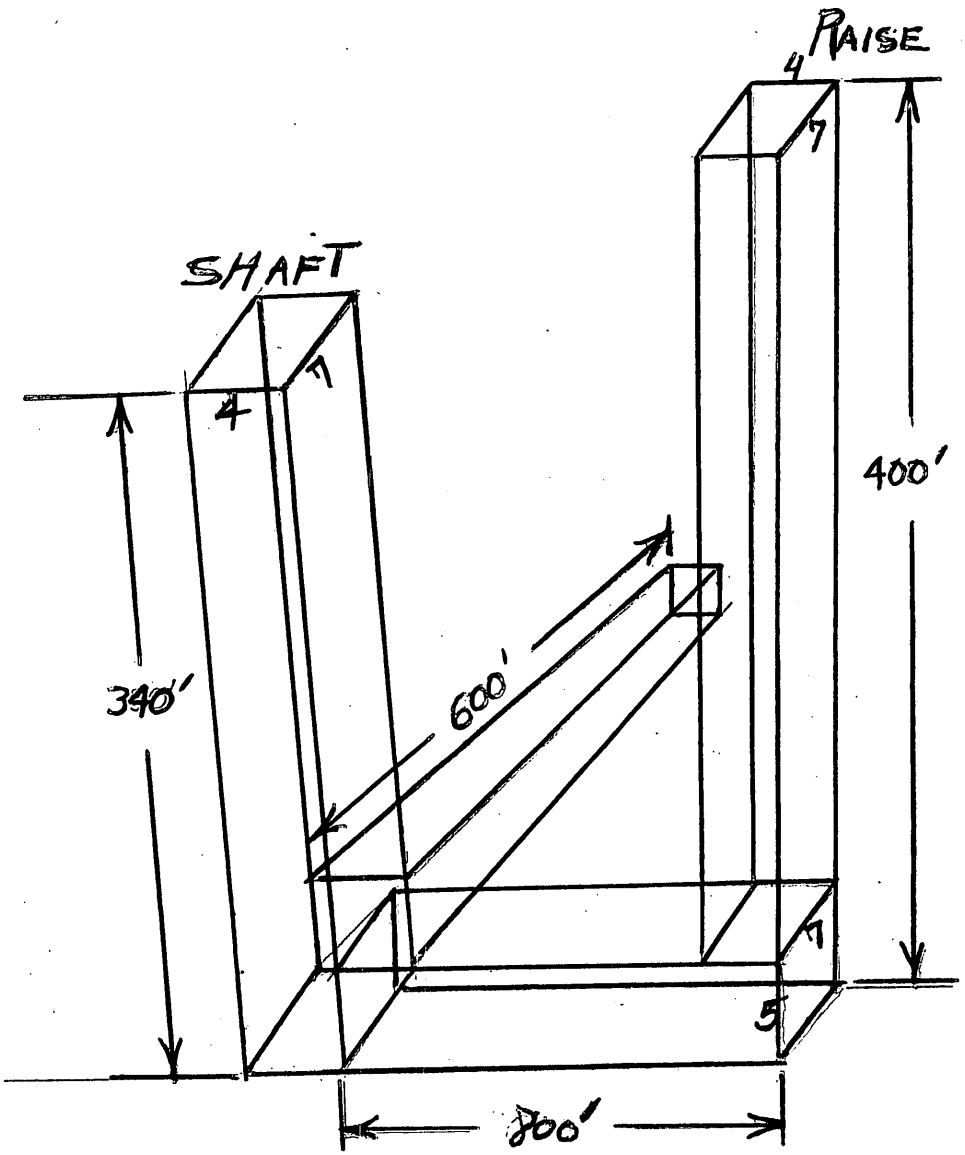

Legend

DRIFTS
5'x7' Clear

SHAFT
4'x7' Clear

RAISE
4'x7' Clear

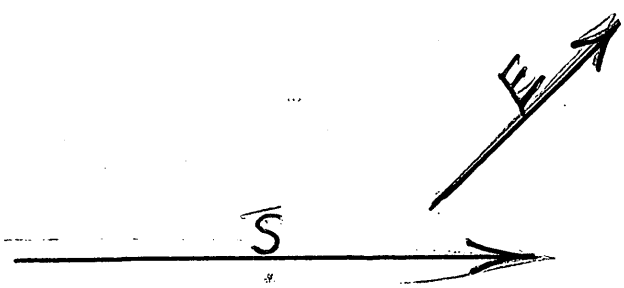

UNITED STATES
DEPARTMENT OF THE INTERIOR
DEFENSE MINERALS EXPLORATION ADMINISTRATION

224 New Customhouse
Denver 2, Colorado

August 27, 1957

9/3 B 220
~~9/3 Klug 500~~
225

Memorandum

To: Chairman, Operating Committee, DMEA

From: Acting Executive Officer, DMEA Field Team, Region III

Subject: Docket No. DMEA-4604 (Copper), Arrowhead Mining Company (Lucky Strike claims) Graham County, Arizona

Will you please advise the present status of the subject application.

E. N. Harshman

E. N. Harshman

DMEA Form 7
(12-56)

OFFICIAL FILE COPY

Date	Surname	Code
8/26	Klugescheid	500
	Friend	500
8/26	Seffodge	190
8/26	Johnson	110
"	Mittendorf	100
8/27	O	225
		225

AUG 27 1957

Mr. Grant Godfrey, Partner
Arrowhead Mining Company
Post Office Box 494
Safford, Arizona

Re: Docket No. DMEA-4604 (Copper)
Arrowhead Mining Company
Lucky Strike Claims
Graham County, Arizona

Dear Mr. Godfrey:

We refer to our letter of June 20, 1957 and Mr. Harshman's letter of May 14, 1957, requesting information as to your intentions regarding the cited application for exploration assistance.

As we have not received any reply to these letters, we are considering your application as having been withdrawn and are placing it in our inactive files.

We regret the necessity of taking such action; however, it is taken without prejudice to your proposed project. If at some future time you desire to reopen this case, you may do so by filing a new application, referring to the subject application by the DMEA docket number, and furnishing any other information that you think might be helpful.

Sincerely yours,

C. O. Mittendorf (for)

Administrator

WPKlugescheid/er 8/26/57
Copy to: Docket
Admr R File
Op. Committee
Mr. McMahon, USBM
Mr. Kiilsgaard, USGS
Region III (2)
Chron.

8623

DMEA Form 7
(12-56)

OFFICIAL FILE COPY

Date	Surname	Code
8/26	Klugescheid	5-00

August 26, 1957

Memorandum

To: Director, Division of Operations Control & Statistics

From: Director, Division of Base Metals

Subject: Withdrawal of Docket No. DMEA-4604, Arrowhead Mining Company, Lucky Strike Claims, Graham County, Arizona, Copper.

Please be advised that application Docket No. DMEA-4604, Arrowhead Mining Company, should be withdrawn as we have received no reply to any of our letters.

W R Griswold

W. R. Griswold

WPKlugescheid/er
Copy to: Docket
Admr R File
Chron.

8623

UNITED STATES
DEPARTMENT OF THE INTERIOR
DEFENSE MINERALS EXPLORATION ADMINISTRATION

224 New Customhouse
Denver 2, Colorado

July 31, 1957

OFFICIAL FILE COPY
DMEA
RECEIVED AUG 5 1957

DATE	INITIALS	CODE
8/5	P.K.	220
8/5	Klug.	500

Memorandum

To: Chairman, Operating Committee, DMEA

From: Acting Executive Officer, DMEA Field Team, Region III

Subject: DMEA Docket-4604 (Copper) Arrowhead Mining Company, (Lucky Strike claims) Graham County, Arizona

We have had no response from the applicant to the Administrator's letter dated June 20, 1957.

Will you please advise the status of this application?

E. N. Harshman

E. N. Harshman

DMEA Form 7
(12-56)

OFFICIAL FILE COPY

Date	Surname	Code
6/19	Klugescheid	500
	Tolanvel	500
"	Lemon	110
	Mittendorf	100
6/20	C	225
		500

JUN 20 1957

Mr. Grant Godfrey, Partner
Arrowhead Mining Company
Post Office Box 494
Safford, Arizona

Re: Docket No. DMEA-4604 (Copper)
Arrowhead Mining Company
Lucky Strike Claims
Graham County, Arizona

Dear Mr. Godfrey:

Reference is made to Mr. Harshman's letter of May 14, 1957, requesting information as to your intentions regarding the cited application for exploration assistance.

We wish to cooperate with you fully in allowing ample time for you to receive your reply from the Rare Metals Corporation; however, we cannot indefinitely postpone action on an application. Therefore, if we do not receive some definite information regarding this matter within 30 days from the date of this letter, we will assume that you are no longer interested in proceeding with your application, and we will consider it as having been withdrawn.

Sincerely yours,

C. O. Mittendorf
Administrator

WPKlugescheid/er 6/19/57
Copy to: Docket
Admr R File
Op. Committee
Mr. McMahon, USBM
Mr. Kiilsgaard, USGS
Region III (2)
Chron.

8623

UNITED STATES
DEPARTMENT OF THE INTERIOR
DEFENSE MINERALS EXPLORATION ADMINISTRATION

224 New Customhouse
Denver 2, Colorado

June 14, 1957

OFFICIAL FILE COPY
DMEA
RECEIVED JUN 17 1957

DATE		CODE
6/17	C	220
6/17	~~[illegible]~~	~~500~~
DMEA		

Memorandum

To: Secretary to the Operating Committee

From: DMEA Field Team, Region III

Subject: Docket DMEA 4604 (Copper) Arrowhead Mining Company (Lucky Strike Claims) Graham County, Arizona

By letter dated May 14, 1957, the Applicant was requested to advise us of his intentions regarding the further processing of the application included under the subject docket.

Having received no reply to our inquiry, we are directing the matter to your attention for whatever action is indicated.

W. H. King
Executive Officer

224 New Customhouse
Denver 2, Colorado

May 14, 1957

OFFICIAL FILE COPY
DMEA
RECEIVED
5/17 C 220
5/17 WPK 500

Docket

Mr. Grant Godfrey, Partner
Arrowhead Mining Company
P. O. Box 494
Safford, Arizona

Re: Docket DMEA 4604 (Copper)
Arrowhead Mining Company
(Lucky Strike Claims)
Graham County, Arizona

Dear Mr. Godfrey:

By letter dated April 12, 1957, you enclosed a copy of an inquiry to Rare Metals Corporation of America concerning an anticipated lease and requested us to hold your application open until you received a reply from them.

Since sufficient time has elapsed for you to have received your reply, we would now like to know what your intentions are regarding your application.

Very truly yours,

Original signed by
E. N. HARSHMAN

E. N. Harshman
Acting Executive Officer

MHM:eh
cc: Sec. Op. Comm. (2)
Harshman
Storms
Emerick
Docket
Chron.

RAYMOND GODFREY
617 THIRD ST.
SAFFORD, ARIZONA

W. D. ROPER
217 ELEVENTH ST.
SAFFORD, ARIZONA

DMEA
DEPARTMENT OF THE INTERIOR
APR 16 1957
REGION III
DENVER, COLORADO

ARROWHEAD MINING COMPANY

P. O. BOX 494
SAFFORD, ARIZONA

April 12, 57

Mr. W. M. Traver
Executive Officer
DMEA Field Team, Region 111
224 New Customhouse Bldg.
Denver 2,
Colorado

Re: Docket No. DMEA-4604 (Copper)
Arrowhead Mining Co.
Lucky Strike Claims
Graham County, Arizona

Dear Sir,

I am enclosing a copy of our letter to Rare Metals Corporation mailed this date.

I would appreciate it if you could hold our application for Government assistance open until I get a reply from them.

Very truly yours,

ARROWHEAD MINING CO.

By Grant Godfrey
Partner
Grant Godfrey

Enc. 1

OFFICIAL FILE COPY
DMEA
RECEIVED APR 19 1957

DATE	INITIALS	CODE
4/19	C	220
4/19	Klug.	500

Photo cy
Sec Ope Comm (2)
Storms
Emerick

Docket

RAYMOND GODFREY
617 THIRD ST.
SAFFORD, ARIZONA

W. D. ROPER
217 ELEVENTH ST.
SAFFORD, ARIZONA

ARROWHEAD MINING COMPANY

P. O BOX 494

SAFFORD, ARIZONA

DMEA
DEPT. OF THE INTERIOR
APR 16 1957
REGION III
DENVER, COLORADO

Rare Metals Corporation of America,
10th Floor First Security Bank Bldg.,
4th. South and Main, Salt Lake City 11, Utah.

Dear Sirs:

We answered your letter of proposal, subscribing changes; we have also furnished you Abstract of Title. We feel that sufficient time has elapsed in which you could have submitted your proposed lease.

You will understand that we do not propose to keep the property tied up without sufficient assurance from you. We therefore notify you that if our proposed lease is not submitted to us on or before April 25, 1957, we will assume that you do not desire to lease the property.

Very truly yours,

W. D. Roper
W. D. Roper by
W. D. Roper
Agt in fact

Grant Godfrey
Richard Kimbaugh
By Grant Godfrey
Raymond Godfrey

cc. Mr. Schonhauer, Attorney,
Tucson, Arizona.

OFFICIAL FILE COPY
DMEA
RECEIVED APR 19 1957

DATE	INITIALS	CODE

OFFICIAL FILE COPY
DMEA
RECEIVED MAR 28 1957

DATE	INITIALS	CODE
3/28	C	220
3/28	[illegible]	500

204 New Customhouse
Denver 2, Colorado

March 25, 1957

Mr. Grant Godfrey, Partner
Arrowhead Mining Company
P. O. Box 494
Safford, Arizona

Re: Docket DMEA-4604 (Copper)
Arrowhead Mining Company
(Lucky Strike claims)
Graham County, Arizona

Dear Mr. Godfrey:

On February 19, 1957, a representative of our Tucson office met with you in Safford, Arizona to discuss the application for exploration assistance filed by you for the Arrowhead Mining Company. At that meeting, it was learned that the Arrowhead Mining Company had negotiated a mining lease and purchase agreement with the Rare Metals Corporation of America, and that the application for exploration assistance might be withdrawn.

We have not heard from you since the February meeting in Safford and thus do not know your decision regarding your application. Will you please notify this office at your earliest convenience of your intentions so that we may continue to process your application or consider it as having been withdrawn.

Very truly yours,

Original sig.
E. N. HARSHMAN
E. N. Harshman
Acting Executive Officer
DMEA Field Team, Region III

ENH:jy
cc: Sec. Op. Comm. (2) w/copy Emerick's ltr. dtd 2/20/57
Storms
Emerick
Docket 4604
Chron.

DMEA
DEPARTMENT OF THE INTERIOR
FEB 25 1957
REGION III
DENVER, COLORADO

IN REPLY REFER TO:

UNITED STATES
DEPARTMENT OF THE INTERIOR
GEOLOGICAL SURVEY

FEB 25 1957

Box 4126 University Station
Tucson, Arizona

GEOLOGICAL SURVEY
DENVER, COLO

February 20, 1957

Memorandum

To: W. M. Traver, Executive Officer DMEA Field Team, Region III

From: W. L. Emerick Through: E.N. Harshman

Subject: Docket DMEA 4604 (Copper) Arrowhead Mining Company (Lucky Strike claim), Graham County, Arizona

As a result of a discussion of the above docket with Bureau of Mines representatives in Tucson, it was decided a prior meeting with the applicant before making an examination would be most desirable in effecting a revised project. This procedure was elected as suggested in Mr. W. M. Traver's letter dated February 5, 1957, and letter of W. H. King dated February 8, 1957.

The Geological Survey representative of the Tucson DMEA examining team met Mr. Grant Godfrey, one of the four partners, in Safford, Arizona on February 19, 1957. At this meeting Mr. Godfrey informed us that the partnership had negotiated a mining lease and purchase option agreement with Rare Metals Corporation of America, of Salt Lake City, a subsidiary of El Paso Natural Gas Company. The signed agreement had been returned to Rare Metals Corporation of America prior to the Geological Survey representative's visit to Safford.

It was suggested to Mr. Godfrey that he notify the DMEA field team, Region III, Denver, at the earliest possible date, of this agreement and of the partnership's intention to withdraw the DMEA application for government assistance in exploration.

Interest of the Rare Metals Corporation of America in the property was noted on February 19th by the presence of one of their field parties on the property.

As a matter of record, the Arrowhead Mining Company partners were agreeable to a much revised project if field examination findings were favorable.

W L Emerick

W. L. Emerick
U, S. Geological Survey

RETURN THIS COPY
DMEA
RECEIVED MAR 28 1957
DATE | INITIALS | CODE

WLE:ms
cc: Harshman
King
Storms
File

Docket

Docket

DMEA
DEPARTMENT OF THE INTERIOR
FEB 8 1957
REGION III
DENVER, COLORADO

February 8, 1957

Memorandum

To: N. R. Storms

From: Superintendent, Denver Experiment Station, Reg. III

Subject: Docket DMEA 4604 (Copper) Arrowhead Mining Company, (Lucky Strike claim) Graham County, Arizona

Enclosed is the brochure covering the above docket.

Your attention is directed to correspondence by N. E. Nelson, U. S. Geological Survey, A. D. McMahon, Bureau of Mines, and Executive Officer, W. M. Traver. Please review the application, discuss it with the Geological Survey representatives and use your own judgment regarding the necessity of making an examination.

If it is at all possible to reconcile the matter, an examination and suitable report should be made. After your decisions have been made we would appreciate having a memorandum sent to the Executive Officer for his information with a copy for our files. If an examination is made and a report prepared, it should be handled in the usual manner.

W. H. KING

W. H. King

Enclosures

cc: W. M. Traver (3)
E. N. Marshman
W. L. Emerick

OFFICIAL FILE COPY
DMEA
RECEIVED FEB 13 1957

DATE	INITIALS	CODE
2-13	C	220
2/13	WPK	500

See Opr Corr (2)

UNITED STATES
DEPARTMENT OF THE INTERIOR
DEFENSE MINERALS EXPLORATION ADMINISTRATION
WASHINGTON 25, D. C.

Klug
Sdy

224 New Customhouse
Denver 2, Colorado

February 5, 1957

Docket

Memorandum

To: W. H. King (2) (w/application, Chairman's letter, and memoranda)
W. L. Emerick (w/Chairman's letter and memoranda) and application

From: DMEA Field Team, Region III

Subject: Docket DMEA 4604 (copper) Arrowhead Mining Company (Lucky Strike claim) Graham County, Arizona

Enclosed are copy of the subject application in the amount of $110,868.83, its transmittal to the Executive Officer from the Chairman of the Operating Committee for referral to the field, and memoranda of review by A. D. McMahon, Bureau of Mines, and H. E. Nelson, U. S. Geological Survey.

The application in its present form leaves much to be desired, as evidenced by the comments contained in the Chairman's letter. You may therefore wish to have the proposal reviewed in the Tucson office to determine whether or not a meeting with the Applicant is desirable prior to contemplating a field examination. If the Applicant is agreeable to a revised project and the findings of the examination are favorable, notify this office and we will prepare the necessary Consent to Lien forms for execution.

In any event, please return the Bureau of Mines brochure with the Report of Examination, or the memorandum which may be submitted in lieu thereof.

DMEA Field Team, Region III

Original signed by
W. M. TRAVER

By W. M. Traver
Executive Officer

Enclosures
MMM:ytl
cc
Sec. Op. Comm. (2)
Harshman (w/copy Chairman's letter and reviews)
Docket 4604
Chron.

OFFICIAL FILE COPY
DMEA
RECEIVED FEB 7 1957

DATE	INITIALS	CODE
2-8	C	220
		500

DMEA Form 7
(12-56)

OFFICIAL FILE COPY

Date	Surname	Code
	Klugescheid	500
	Simmons	500
1/30	Selbridge	130
"	Johnson	
1-31	C	200
		110
	Mittendorf	100
		500.

JAN 30 1957

Mr. Grant Godfrey, Partner
Arrowhead Mining Company
Post Office Box 494
Safford, Arizona

Re: Docket No. DMEA-4604 (Copper)
Arrowhead Mining Company
Lucky Strike Claims
Graham County, Arizona

Nelson
Lamb

Dear Mr. Godfrey:

Your application for Government assistance to explore the cited property has been reviewed by the Base Metals Division of the Defense Minerals Exploration Administration and has been referred to:

Mr. W. H. Traver
Executive Officer
DMEA Field Team, Region III
224 New Customhouse Bldg.
Denver 2, Colorado

If the Field Team requires additional information concerning your application, they will contact you at an early date.

Sincerely yours,

C. O. Mittendorf

Administrator

WPKlugescheid/er 1/30/57
Copy to: Docket
Admr R File
Op. Committee
Base Metals
Mr. Bishop, USBM
Mr. Kiilgaard, USGS
Region III (2)
Chron.

8623

DMEA Form 7
(12-56)

500

OFFICIAL FILE COPY

Date	Surname	Code
	Hugesebid	500
	Friswold	500
1/30	Selfridge	130
"	Johnson	110
"	Matthews	110 225

JAN 30 1957

Mr. W. M. Traver
Executive Officer
DMEA Field Team, Region III
224 New Customhouse Bldg.
Denver 2, Colorado

Re: Docket No. DMEA-4604 (Copper)
Arrowhead Mining Company
Lucky Strike Claims
Graham County, Arizona

Dear Mr. Traver:

The cited application for exploration assistance is being referred to your office for consideration, a field examination of the property if warranted, and recommendations.

If the project is favorably considered by the Field Team, and merit is found in the project as now constituted, a number of factors will have to be taken into consideration.

(1) Consent to Lien and Subordination Agreement will have to be obtained on the standard form.

(2) Probably the Applicant does not have a clear idea as to the geology of this deposit. An effort has been made to supply a map of the veins but the accuracy thereof is open to question. It has not supplied any samples taken from any of the open cuts and it was not stated whether the sorted ore was oxide or sulphide.

(3) The shaft sinking is excessive for a deposit of which nothing much is known.

(4) The proposed 400-foot raise for ventilation purposes is completely out of the question. The Applicant most certainly has no idea as to the difficulties involved in driving a raise of this length.

R.C.H.

8623

(5) The sinking costs are high and the advance per shift is only a small fraction over one foot.

(6) The Applicant states that it will supply its share of the cost with labor and equipment. Depreciation of its equipment has not been figured in as a part of the cost of the project.

(7) The property map is incomplete, as only two claims are given and even these two are not named.

(8) A slusher and ramp for mucking in the drift and crosscut seems a bit outmoded. A mucking machine would be much more satisfactory.

(9) No allowance is made for sampling and assaying.

A drilling program to determine the possible value of the deposit might be the best method of beginning the exploration and then, if the results are favorable, other work might be considered.

We are referring this project to your office as the men who compose the company are apparently practical miners and do not know how to plan a project. They will need a lot of help in getting things straightened out and, unless the project is favorably considered by your office, much time would be needlessly lost.

Copies of memoranda dated January 16 and 24, 1957, by N. E. Nelson, Geological Survey, and A. D. McMahon, Bureau of Mines, respectively, relating to the project, are enclosed for your information. Also, we are enclosing two copies of the application for the use of the Field Team.

Sincerely yours,

George C. Selfridge

Chairman, Operating Committee (GCS)

WPKlugescheid/er 1/30/57

Copy to: Docket
Admr R File
Op. Committee
Base Metals
Mr. McMahon, USBM
Mr. Kiilsgaard, USGS
Chron.

Enclosures

APPROVED:

Frank D. Lamb (FDL)

Member, Bureau of Mines

N. E. Nelson (NEN)

Member, Geological Survey

OFFICIAL FILE COPY
D M E A
RECEIVED JAN 24 1957

DATE	INITIALS	CODE
1-24	C	220
1-24	WPK	500
January	24, 1957	

UNITED STATES
DEPARTMENT OF THE INTERIOR
BUREAU OF MINES
WASHINGTON 25, D. C.

Memorandum

To: W. R. Griswold, Defense Minerals Exploration Administration

From: Commodity Specialist, Branch of Base Metals

Subject: Review of application, Docket No. DMEA 4604 (copper), Arrowhead Mining Company, Lucky Strike Claims, Graham County, Arizona. $110,868.83

The applicant seeks Government assistance in an exploration program consisting of 340 feet of shaft sinking, 600 feet of drifting, 800 feet of crosscutting, and 400 feet of raising to test the mineralization of veins and dykes in monzonite porphyry.

Copper mineralization is indicated from the applicant's statement that two cars of hand sorted ore, averaging above 2 percent copper, have been shipped from the above-cited claims. However, the application does not attempt to justify the proposed estimated expenditure other than to state, "we believe that in depth there will be found ore of higher grade...". It is believed that a drilling program should precede the underground work if the property warrants Government assistance in an exploration project.

The estimated labor costs per foot of advance indicate that the shaft will progress at the rate of about one foot per shift and the drifts two feet per shift. Consequently, the proposed unit costs appear excessive.

Referral of the application to the Field Team is recommended.

A. D. McMahon

A. D. McMahon

Copy to: Division of Minerals
Branch of Base Metals (2)
Thor Kiilsgaard, U.S.G.S.
F. D. Lamb
Files

IN REPLY REFER TO:

UNITED STATES
DEPARTMENT OF THE INTERIOR
GEOLOGICAL SURVEY
WASHINGTON 25, D. C.

OFFICIAL FILE COPY
RECEIVED JAN 18 1957

DATE	INITIALS	CODE
1-17	CW	220
1/17	WPK	500

January 16, 1957

Re: DMEA 4604
Arrowhead Mining Co.,
(Partnership)
Lucky Strike Group
Graham County, Arizona
$110,868.83 - Copper

Memorandum

To: W. R. Griswold, Defense Minerals Exploration Administration

From: N. E. Nelson, U. S. Geological Survey

Subject: Review of application

The applicant (a partnership) requests assistance in sinking 340 feet, crosscutting-drifting 1400 feet and raising 400 feet. The property adjoins on the north the property of the Tuab Minerals Corporation, the subject of application 4343. The examiners and the Field Team have recommended (Dec. 19th, 1956) a diamond drilling project for the Tuab prospect.

Whereas at the Tuab property the average depth of worthwhile copper mineralization (1% copper) is assumed to be 120 feet, the referenced applicant is proposing a 350 'bite'. At the Tuab prospect the copper occurs in veins and veinlets in monzonite-porphyry. The present applicant assumes the copper is present in monzonite dikes.

Perhaps the examiners can appraise the application without another visit to the locality.

Referral of the application to the Field Team is recommended.

N. E. Nelson

N. E. Nelson

AUXILIARY CALCULATIONS

KLUGESCHEID

Letter from Mr. [illegible]

Arrowhead Mining Company (a partnership)

Shaft: 85° — 340' — 4'x7' — $100 (only partial) per foot.

Drifting: 800' + 600' = 1,400' — 5'x7' — $38.20 (only partial) per foot

Raising: 480' — 4'x7' — $35.96 (only partial) per foot. ?

4x7 Raise

5'-4" x 8'-4" say
5'-6" x 8'-6" + Divider

4"x6" = 2"x12" = 2 Bd Ft.
8"x8" = 64 sq Ins
12"x12" = 144 " "

$\frac{64}{144}$ = 0.444 Bd Ft/Sq. = 5.33 Bd Ft./Ft.

2"x12" = 2 Bd Ft/ft.

Assume lagged solid 5'-0" c to c. 8 per side + 5 per end = 26 lagging

Blocking 8"x8"x1'0" = 10 blocks

Then (8"x8")

	8.5 x 2 = 17' x 5.33	=	90.61
	5.5 x 3 = 16.5' x 5.33	=	87.95
2"x12" Lagging	26 x 5 = 130' x 2	=	260.00
8"x8" Blocking	= 10' x 5.33	=	53.30
4"x6" Divider	= 10' x 2.00	=	20.00
			511.86

Say 600 Bd Ft. @ $100 = $60 per set.

Shaft.

5'6" x 8'-6" + Divider

Same

60
28
88 / 5 = 18 sets (including labor)

Labor assume three men 1 shift to part in which is too high. Labor @ 2.30/hr.

8 x 2.3 x 3 = 55.2/2 = 27.75

24
2.3
72
48
55.2

Labor in shaft! Assume 4 men per shift @ 2.30/hr. 2.30 x 8 = 18.40 per man shift.

4

$73.60 per day

@ 2 feet/day. 36.80/ft. so 66.70 is out of line.

Total Footage. 340' + 1,400' + 400' = 2140'

50% Purchase Rentals cost $7,542.94/2 = $3,772.00

2,140 | 3772.00 $1.76/foot for all development.

2140 x

16320

14980

13400

Depreciation cost on equipment supplied by them has been left out.

Names of claims shown on map?

Claim map of the 4 claims (with workings)

Proper Consent to Lien.

Raise not feasible

Shaft rather small.

No Assay values given (actual)

Depreciation

Muckering machine instead of slusher

5 year option on lease.

UNITED STATES
DEPARTMENT OF THE INTERIOR
DEFENSE MINERALS EXPLORATION ADMINISTRATION
WASHINGTON 25, D. C.

January 14, 1957

Arrowhead Mining Company
P. O. Box 494
Safford, Arizona

Subject: DMEA-4604

Gentlemen

Your application for exploration assistance, dated January 3, 1957 submitted to our office at Denver, has been assigned Docket Number DMEA-4604 and referred to the Base Metals Division in the Washington office. Kindly identify all future correspondence relating to your application by this Docket Number.

Sincerely yours,

(Sgd) Allen S. Dakan

Allen S. Dakan, Director
Operations Control and
Statistics Division

Copy to:

Region III. Denver, Colorado

~~Code~~ 500

6416

UNITED STATES
DEPARTMENT OF THE INTERIOR
DEFENSE MINERALS EXPLORATION ADMINISTRATION
WASHINGTON 25, D. C.

224 New Customhouse
Denver 2, Colorado

February 5, 1957

Pending

Memorandum

To: W. H. King (2) (w/application, Chairman's letter, and memoranda)
W. L. Emerick (w/Chairman's letter and memoranda) and application

From: DMEA Field Team, Region III

Subject: Docket DMEA 4604 (copper) Arrowhead Mining Company (Lucky Strike claim) Graham County, Arizona

Enclosed are copy of the subject application in the amount of $110,868.83, its transmittal to the Executive Officer from the Chairman of the Operating Committee for referral to the field, and memoranda of review by A. D. McMahon, Bureau of Mines, and E. E. Nelson, U. S. Geological Survey.

The application in its present form leaves much to be desired, as evidenced by the comments contained in the Chairman's letter. You may therefore wish to have the proposal reviewed in the Tucson office to determine whether or not a meeting with the Applicant is desirable prior to contemplating a field examination. If the Applicant is agreeable to a revised project and the findings of the examination are favorable, notify this office and we will prepare the necessary Consent to Lien forms for execution.

In any event, please return the Bureau of Mines brochure with the Report of Examination, or the memorandum which may be submitted in lieu thereof.

DMEA Field Team, Region III

Original signed by
W. M. TRAVER

By W. M. Traver
Executive Officer

EXTRA COPY
DMEA
RECEIVED FEB 7 1957

DATE	INITIALS	CODE

Enclosures
MMM:ytl
cc
Sec. Op. Comm. (2)
Marshman (w/copy Chairman's letter and reviews)
Docket 4604
Chron.

Pending

February 8, 1957

DMEA
DEPARTMENT OF THE INTERIOR
FEB 8 1957
REGION III
DENVER, COLORADO

Memorandum

To: W. R. Storms

From: Superintendent, Denver Experiment Station, Reg. III

Subject: Docket DMEA 4604 (Copper) Arrowhead Mining Company, (Lucky Strike claim) Graham County, Arizona

Enclosed is the brochure covering the above docket.

Your attention is directed to correspondence by N. E. Nelson, U. S. Geological Survey, A. D. McMahon, Bureau of Mines, and Executive Officer, W. M. Traver. Please review the application, discuss it with the Geological Survey representatives and use your own judgment regarding the necessity of making an examination.

If it is at all possible to reconcile the matter, an examination and suitable report should be made. After your decisions have been made we would appreciate having a memorandum sent to the Executive Officer for his information with a copy for our files. If an examination is made and a report prepared, it should be handled in the usual manner.

W. H. King

W. H. King

EXTRA COPY
DMEA
RECEIVED FEB 13 1957

DATE	INITIALS	CODE

Enclosures

cc: W. M. Traver (3)
K. N. Harshman
W. L. Emerick

224 New Customhouse
Denver 2, Colorado

January 8, 1957

Memorandum

To: Secretary to the Operating Committee

From: DMEA Field Team, Region III

Subject: Application for DMEA Aid (Copper) Arrowhead Mining Company (Lucky Strike claims) Graham County, Arizona.

Enclosed are the original and two copies of the subject application in the amount of $110,868.83. One copy of the application is being retained in our file.

DMEA Field Team, Region III

Original signed by
W. M. TRAVER

By W. M. Traver
Executive Officer

Enclosures

HMC:ytl

cc
Sec. Op. Comm. (3)
Harshman
Storms
Docket
Chron.

U. S. Government Messenger Envelope

Standard Form No. 65 (Rev. 1/46)

1. Use blocks consecutively, one at a time.
2. Void previous block.
3. Write clearly.

NAME OR TITLE OF PERSON, DEPARTMENT, ADDRESS, AND ROOM		NAME OR TITLE OF PERSON, DEPARTMENT, ADDRESS, AND ROOM	
Standards Division Specifications Branch Room 1038 Alcoott Hall	RUN STOP	Base Inlets-Code 502 DBMEA-4604	RUN STOP
Mr. Frederick C. Gray Room 1123 - GSA Bldg. 18th & F Streets, N. W.	RUN STOP		RUN STOP
Mr. Lowther 5270-A - Reg. Off. Bldg	RUN STOP		RUN STOP
Mr. Gray Rm - 1123 - GSA Bldg.	RUN STOP		RUN STOP
Mr. Shackelle 5140 - GSA Bldg.	RUN STOP		RUN STOP
Robert Beebe Room 7023 - GSA	RUN STOP		RUN STOP
Mr. Gerard 7220 GSA.	RUN STOP		RUN STOP
Mr. Lemmon Rm. 4707 - GSA USGS	RUN STOP		RUN STOP
Mary Mecs B-242-B	RUN STOP		RUN STOP
Mr. W. L. Griswold Rm. 4058 Interior Bldg.	RUN STOP		RUN STOP

Send surplus envelopes to supply room for reissue.

Use other side

16-38

Use RUN and STOP only when messenger service between Government buildings in Washington is required. Your mail room has RUN and STOP information.

U. S. Government Messenger Envelope

Standard Form No. 65 (Rev. 1/46)

1. Use blocks consecutively, c
2. Void previous block.
3. Write clearly.

NAME OR TITLE OF PERSON, DEPARTMENT, ADDRESS,		NAME OR TITLE OF PERSON, DEPARTMENT, ADDRESS, A
~~[illegible]~~	STOP	[illegible]
~~[illegible]~~	RUN STOP	Mr. Lloyd Hough
~~[illegible]~~	RUN STOP	Solicitor's Office
Mr. E. P. Rennie ~~Interior~~	RUN STOP	Administrative Assistant C. Office Sm. 4457
Mrs Frey	RUN STOP	~~Mrs Kittinger~~
Sgt. [illegible] Park Police	RUN STOP	
Chief Stewart	RUN STOP	
Mrs Littleal Rm 1210	RUN STOP	
~~Rec Desk 6300~~	RUN STOP	
Mr. [illegible] N. R. S.	RUN STOP	

JUL 1 8 1956

Send surplus envelopes to supply room for reissue.

Use other side

Use RUN and STOP only when messenger service between Government buildings in Washington is required. Your mail room has RUN and STOP information.