# RECORDS TRANSMITTAL AND RECEIPT

Complete and send original and two copies of this form to the appropriate Federal Records Center for approval prior to shipment of records. See specific instructions on reverse.

PAGE 1 OF 2

**1. TO** (*Complete the address for the appropriate records center serving your area*)

Federal Archives and Records Center
General Services Administration

*As shown in FPMR 101-11.410-1*

**2. AGENCY TRANSFER AUTHORIZATION**

TRANSFERRING AGENCY OFFICIAL (*Signature and title*): F. William Hasler, Chief, Office of Minerals Exploration

DATE: 4/28/82

**3. AGENCY CONTACT**

TRANSFERRING AGENCY LIAISON OFFICIAL (*Name, office and telephone No.*)

U.S.G.S Bldg. 25, Rm. 2502, MS 933
Denver Federal Center (303) 234-2451

**4. RECORDS CENTER RECEIPT**

RECORDS RECEIVED BY (*Signature and title*)

DATE

**5. FROM** (*Enter the name and complete mailing address of the office retiring the records. The signed copy of this form will be sent to this address*)

Office of Minerals Exploration
U.S. Geological Survey
MS 933 Box 25046
Denver Federal Center
Denver, CO 80225

*Fold line*

**6. RECORDS DATA**

| ACCESSION NUMBER RG (a) | FY (b) | NUMBER (c) | VOLUME (cu. ft.) (d) | AGENCY BOX NUMBERS (e) | SERIES DESCRIPTION (With inclusive dates of records) (f) | RESTRICTION (g) | DISPOSAL AUTHORITY (Schedule and item number) (h) | DISPOSAL DATE (i) | COMPLETED BY RECORDS CENTER: LOCATION (j) | SHELF PLAN (k) | CONT. TYPE (l) | AUTO. DISP. (m) |
|---|---|---|---|---|---|---|---|---|---|---|---|---|
| | | | | | MINERAL DISCOVERY LOAN CONTRACT FILE | | (revised) | | | | | |
| 057 | 82 | 0021 | 3 | 3 | Completed case files of closed contracts from the Office of Minerals Exploration. Contracts and applications were administered for mineral exploration. Case is listed by docket number for the OME and DMEA financial assistance programs.<br><br>Dockets date from 1958-60 | R | NC1-57-82-1 Item 1 | 1/1990 | | | | |

Standard Form 135 (Rev. 6-76)
Prescribed by GSA
FPMR (41 CFR) 101-11.4

The dockets contain reports of examination, contracts and amendments, settlement sheets, royalty payments (where applicable), semiannual reports, joint, interim, and final reports, maps, and correspondence:

| | Docket No. | Contract No. | Mine and Company |
|---|---|---|---|
| | DMEA | | |
| Box 1 | 4584 | Idm E-1109 | Four Corners Uranium Corporation, Wyoming |
| | 4644 | Idm E-1166 | Uranium Research and Development Co., Wyoming |
| | 4665 | Idm E-1127 | Mid-Continent Uranium Corp., Wyoming |
| | 4721 | Idm E-1207 | La Salle Mining Company, Colorado (Fairday et al claims) |
| | 4820 | Idm E-1164 | Douglas Corporation, Wyoming |
| | 4826 | Idm E-1181 | New Idria Mining and Chemical Company, Colorado |
| | 4889 | Idm E-1178 | Balboa Mining and Development Company, Wyoming |
| | OME | | |
| Box 2 | 6074 | 2110 | United Park City Mines Co., Salt Lake, Summit and Wasatch Counties, Utah |
| Box 3 | 6079 | 2114 | Keystone Mining Co., Summit County, Utah |

UNITED STATES
DEPARTMENT OF THE INTERIOR
OFFICE OF MINERALS EXPLORATION
WASHINGTON 25, D. C.

Rec'd 12/14

December 10, 1964

Memorandum

To: The File

From: Chief, Division of Exploration Operations

Subject: OMX-6364 (Mercury)
Big Sam Mines, Inc.
Sunflower Properties
Maricopa County, Arizona

In accordance with the Applicant's statement on the bottom of our letter to it of November 3, kindly transfer this docket to the inactive file.

George C. Selfridge

12/14/64
Entered in records & file transferred
DMS

MMerrithew/mm
12/8/64
cc: Director's Reading File
Region III w/cy of Applicant's reply
Docket
Code 120M

UNITED STATES
DEPARTMENT OF THE INTERIOR
OFFICE OF MINERALS EXPLORATION
WASHINGTON, D. C.

12/8 [illegible]

Big Sam Mines, Inc.
112 South [illegible] Drive
Mesa, Arizona

Re: OME 0364 (Mercury)
Big Sam Mines, Inc.
Sunflower Properties
Maricopa County, Arizona

Gentlemen:

This is [illegible] which are alternative to the work outlined in your application was suggested.

Will you kindly [illegible] office whether or not you wish to proceed with your application on the basis mentioned in our September letter.

Sincerely yours,

Acting Director

Thank you for reminding us of our failure to reply to your September 3, 1964 letter.

We have no desire to pursue our application any further

Thank you,

BIG SAM MINES, INC.

Secretary

UNITED STATES
DEPARTMENT OF THE INTERIOR
OFFICE OF MINERALS EXPLORATION
WASHINGTON 25, D. C.

NOV 3 - 1964

Big Sam Mines, Inc.
112 South Country Club Drive
Mesa, Arizona

Re: OME-6364 (Mercury)
Big Sam Mines, Inc.
Sunflower Properties
Maricopa County, Arizona

Gentlemen:

This is with reference to our letter of September 3, 1964, in which an alternative to the work outlined in your application was suggested.

Will you kindly advise this office whether or not you wish to proceed with your application on the basis mentioned in our September letter.

Sincerely yours,

George Fumich, Jr.

Acting Director

FMMurphy/mm
11/2/64
cc: Director's Reading File
✓Region III
Docket

UNITED STATES
DEPARTMENT OF THE INTERIOR
OFFICE OF MINERALS EXPLORATION
WASHINGTON 25, D. C.

SEP 3 1964

Big Sam Mines, Inc.
112 South Country Club Drive
Mesa, Arizona

Re: OME-6364 (Mercury)
Big Sam Mines, Inc.
Sunflower Properties
Maricopa County, Arizona

Gentlemen:

A review of your application for financial assistance in an exploration project indicates that your proposal does not meet the criteria for such assistance listed under Section 301.7 of the enclosed OME regulations. The proposal to sink a 1035-foot shaft, establishing stations at each 100-foot level, and crosscutting and drifting on each level in our opinion must be considered development work in preparation for extraction of ore. We regret to advise that under the regulations we are not permitted to assist in this type of work.

However, if feasible, we would consider a proposal to explore the Sunflower properties by means of diamond core drilling as mentioned by Major E. Allured, M. E., in his report in Exhibit D submitted with your application. In the event you wish to submit such a proposal, please include a map or sketch showing the geology of the target areas, the location, direction, and attitude of the proposed holes, copies of bids from three independent contractors for the drilling and, if necessary, bids for bulldozing access roads and drill sites; also, a breakdown of the total estimated cost of the project. Submittal of such a proposal, however, should not be construed that a contract would be granted.

In addition, please submit copies of your letters to the banks. These letters were not submitted with the letters from the two banks. Please submit two copies of the above-listed information.

We will hold the subject application in abeyance pending your reply to this letter.

Sincerely yours,

(signed) FRANK E. JOHNSON

Acting Director

FMMurphy/gla 9-2-64
cc to: Dir. Reading File
Region III✓
Docket

Enclosure

August 27, 1964

Big Sam Mines, Inc
112 South Country Club Drive
Mesa, Arizona

Subject: OME - 6364

Gentlemen:

Your application for exploration assistance, dated August 10, 1964 submitted to our office at Washington, D. C. has been assigned Docket Number OME - 6364.

Please identify all future correspondence relating to your application by this docket number.

Sincerely yours,

Allen S. Dakan, Chief
Division of Administrative
Management

Copy to Region III with
copy of application and
attachments

MME Form 40
*July 1962*

Budget Bureau No. 42–R1368
Approval expires Dec. 31, 1963

UNITED STATES
DEPARTMENT OF THE INTERIOR
OFFICE OF MINERALS EXPLORATION

EXTRA COPY
O. M. E
RECEIVED AUG 27 1964

| DATE | INITIALS | CODE |
|---|---|---|
| | | |

# APPLICATION FOR FINANCIAL ASSISTANCE IN MINERALS EXPLORATION

Pursuant to Public Law 85–701 (72 Stat. 700; 30 U.S.C. 641)

NAME OF APPLICANT *(Full legal name and mailing address as they should appear on contract if one is executed.)*

BIG SAM MINES, INC.
112 South Country Club Drive
Mesa, Arizona

APPLICANT DO NOT USE THIS BLOCK

DOCKET NUMBER 6364

DATE RECEIVED 8·27·64

REGION III

DIVISION CODE

BUSINESS ORGANIZATION *(Check one)*

| | |
|---|---|
| INDIVIDUAL | |
| CORPORATION | X |
| PARTNERSHIP | |
| OTHER *(Specify)* | |

STATE IN WHICH FIRM IS ORGANIZED Arizona

LIST CORPORATE OFFICERS OR PARTNERS HERE, IF APPLICABLE

| NAME | ADDRESS | TITLE |
|---|---|---|
| Thomas E. Bolich | 1604 Farmer Avenue Tempe, Arizonaz | President |
| Frank A. Bauer | 221 West Main Street Mesa, Arizona | Vice Pres. |
| Roy B. McGraw | 1448 West Fourth Place Mesa, Arizona | Secretary |

MINERAL(S) FOR WHICH YOU WISH TO EXPLORE
Mercury

ESTIMATED COST OF PROJECT
$ 492,614.70

| PROPERTY NAME | LOCATION COUNTY | STATE |
|---|---|---|
| Sunflower properties | Maricopa | Arizona |

## GENERAL INSTRUCTIONS

Before filling out this application, please read the *OME Regulations for Obtaining Federal Assistance in Financing Explorations for Mineral Reserves* (30 CFR Chap. III). To assure prompt action, your application must provide all applicable material and information specified on the back of this application form. Avoid unnecessary correspondence and delays by submitting complete and accurate information. *Please submit two copies of this application and all accompanying papers* except as otherwise noted. Place your name and address on each sheet. Each item of information, maps, and reports required as a part of this application is described on the back of this form. Identify each attached statement by the item number to which it applies. If an item does not apply to your application, show the item number on your statement and after it write "not applicable." Maps or sketches should be used to supplement narrative descriptions of the property location and boundaries in item 2, existing mine workings and geology in item 3, and the proposed exploration work in item 5. When this information is not too complex, all of it may be shown on one map or sketch. All documents and other attachments submitted as a part of this application, except those in item 3(g) which you mark to be returned, become the property of the Government and will not be returned to the applicant. Send true copies, *not originals*, of leases, contracts, and other documents which are an essential part of your business records. *File this application with the Office of Minerals Exploration, Department of the Interior, Washington 25, D. C., or with the nearest OME Field Office.*

## CERTIFICATION

The undersigned, whether as an individual, corporate officer, partner, or otherwise, both in his own behalf and acting for the applicant, certifies that the information set forth in this form and accompanying papers is correct and complete, to the best of his knowledge and belief, and that he would not ordinarily undertake the proposed exploration under current conditions and circumstances at his sole expense.

10 August 1964
DATED

Roy B. McGraw
BY *(Signature)*

Secretary
TITLE

A wilfully false statement or certification to any Department or Agency of the United States Government is a criminal offense. U. S. Code, Title 18, Sec. 1001.

# INFORMATION REQUIRED WITH THIS APPLICATION

## 1. Financial Eligibility:

(a) Submit evidence of efforts made within 90 days preceding the filing of this application to obtain credit from your bank of account and at least one other banking institution or other private source of credit. Such evidence shall include true copies of correspondence which show: (1) date of loan request, (2) amount and terms requested, (3) proposed use of loan funds, and (4) the replies from credit sources. If the loan was offered under terms which you consider unreasonable, state why you consider them so.

(b) List names and addresses of affiliated, parent, or controlling companies or organizations and state extent and nature of their interest.

(c) State how you propose to furnish your share of the cost of the exploration work.

## 2. Applicant's Rights in Land:

(a) State your interest in the land and mineral rights, whether owner, lessee, purchaser under contract, or other. If you are not the owner, submit one true copy of the lease, contract, or other document (with address of owner) under which you control the property. Describe all liens, mortgages, or other encumbrances on the land and state book and page number and official place where recorded.

(b) State the legal description (section, township, and range; metes and bounds; patent number of claims) of the land upon which you wish to explore and all adjacent land which you own or control. Describe any part of the land or workings which should not be subject to Government royalty and liens. If the land consists of unpatented claims, state book and page number for each recorded location notice, including amended locations, and official place where recorded. State all the names by which you know the property.

(c) For all land or mineral rights encumbered or not owned, submit five copies of Lien and Subordination Agreements on MME Form 52. If the agreements cannot be obtained, state reasons and provide copies of letters of refusal.

## 3. Physical Description:

(a) Describe in detail and illustrate with maps or sketches all mining or exploration operations which you know have been or are being conducted upon the land. Include existing mine workings and all production facilities.

(b) State your interest, if any, in operations described in (a).

(c) State, if you know, the past and current production, supporting your statement with copies of settlement sheets, mine records, or published data if available.

(d) Describe known ore reserves, giving quantities and grades and sampling methods used. Support your statement with copies of assay certificates and assay maps if available.

(e) Describe by narrative and maps or sketches the geologic features of the property, including ore minerals, geologic formations if known, and type of deposit (vein, bedded, etc.).

(f) State your reasons for expecting to find ore, and if you have sampled the area you propose to explore, show where the samples were taken, describe sampling methods used, and provide copies of assay certificates.

(g) Send with your application at least *two* copies of all geologic or engineering reports, assay maps, or technologic information which you have, indicating whether you require their return.

## 4. Accessibility of Property:

(a) To aid the OME representative who may examine the property, state name and address of person who will meet him; give directions for reaching the property; and describe accessibility of property and of any mine workings.

(b) Name the shipping and supply points and state the distances to the property.

## 5. Exploration Work:

(a) Describe fully the proposed exploration work giving individual footages and sizes of openings *for each item of work.* Use narrative, maps, plans, and sections as necessary. Show location of the proposed work as related to geologic features such as veins, ore-bearing beds, contacts of rock formations, etc. Show also the relation of the proposed work to any existing mine workings and to *land boundaries* or to the closest identifiable corner.

(b) If an access road must be built, show the proposed location on the property map and state the length, type and construction methods proposed.

(c) If an OME contract is executed, state how soon thereafter work would be started and finished. State your anticipated average daily or monthly rate of progress for each type of work.

## 6. Experience:

State your operating experience and background to conduct this exploration work and also that of the person who will supervise the work.

## 7. Estimate of Costs:

Furnish detailed estimates of the necessary costs *for each item of the work proposed in 5(a)* under the headings listed below with a total for each heading and the estimated total cost of the work. Costs for any work to be performed by an independent contractor should be listed separately under category (a) below. Costs for any work that is not to be performed by an independent contractor should be listed under categories (b) through (g).

(a) Independent contracts. State the total cost of any proposed independent contract for all or any part of the work, and the number of units and the unit cost for each type of work, such as per foot of drilling, per foot of drifting, per hour of bulldozer operations, or per cubic yard of material moved. Cost estimates should be supported by bids from three contractors if possible. (*Note*—If none of the work is to be contracted, write "none" after this item.)

(b) Personal services. The cost of supervision, engineering and geological services, outside consultants, and labor should be itemized by numbers and classes of employees; rates of wages, salaries or fees; and periods of employment. State whether these services are available.

(c) Operating materials and supplies. List items of material and supplies giving quantity and cost of each. Include under this heading power, water, and fuel, and units of equipment and tools costing less than $50 each.

(d) Operating equipment. List items of equipment and tools costing $50 or more per unit. Give specifications and indicate how each item is to be acquired—i.e., rented, purchased or provided by the applicant. If rented or purchased, state the estimated rental or purchase price. If furnished by the applicant, state condition and present fair market value.

(e) Initial rehabilitation and repairs. Describe the type and the cost of *initial* rehabilitation or repair of existing buildings, fixtures, installations (exclusive of mine workings), and movable operating equipment now owned by the applicant which will be used in the exploration work.

(f) New buildings, fixtures, installations. Describe each building, fixed improvement, and installation to be purchased, constructed, or installed for the exploration work, stating specifications and cost including labor, materials, and supervision.

(g) Miscellaneous. Describe the type and estimate the cost of repairs and maintenance of the operating equipment listed in 7(d). Do not repeat initial repairs listed in 7(e). Show also the costs of analytical work, accounting, workmen's compensation and employees' liability insurance, payroll taxes, and other required costs that do not fall within the previous categories. [*Note*—The Government will not contribute to costs incurred before the date of the contract, or to costs of or incident to: (1) acquiring, using, or possessing land and any existing improvements, facilities, buildings, installations, and appurtenances, or the depreciation and depletion thereof; (2) general overhead, corporate management, interest and taxes (other than payroll and sales taxes); (3) insurance (other than employees' liability insurance); and (4) damages to persons or property (other than authorized repair to or replacement of equipment or other property used in the work).]

INT.-DUP. SEC., WASH., D.C.11879

BIG SAM MINES, INC.
112 S. Country Club Dr.
Mesa, Arizona

| Item No. | Explanation |
|---|---|
| 1 (a) | A letter from the Valley National Bank of Arizona (West Side Office, Mesa, Arizona, the bank with which the Corporation has done all of its banking business is attached as Exhibit A. A letter from the Arizona Bank (East Mesa Office, Mesa, Arizona) is attached as Exhibit B. |
| 1 (b) | None |
| 1 (c) | Labor, use of equipment, sale of capital stock. |
| 2 (a) | The applicant is the lesee of the land and mineral rights. A copy of the lease for unpatented mineral claims is attached as Exhibit C. The name and address of the lessor is:<br><br>Sunflower Properties, Inc.<br>2960 Glendale Boulevard<br>Los Angeles 39, California<br><br>There are no encumbrances against either the lessee's or Lessor's interest in said unpatented mineral claims. |
| 2 (b) | The fifty unpatented claims shown on Exhibit C attached hereto, which said exhibit shows the name of each claim and the book and page number at which the location notice is recorded in the records of Maricopa County, all of said claims are located in Township 7 North, Range 8 East, or Township 7 North, Range 7 East, of the Gila and Salt River Base and Meridian, as shown in the claim map contained in the report Sunflower Group of Mercury Claims, Arizona, which is enclosed as Exhibit D.<br><br>The applicant does not own or control any adjacent land. The property has been known at various times as the National Mine, the Miezpaw Quick Silver Lode Claims of Sunflower Properties, Inc., Mercury Claims in Sunflower Mining District. |
| 2 (c) | Five copies of lien and subordination agreement on MME Form 52 are enclosed, duly executed by the lessor. |
| 3 (a) | See report Sunflower Group of Mercury Claims, Arizona, attached as Exhibit D., together with the supplemental information attached to the inside back cover, showing exploration and mining work done since the date of that report. |

| Item No. | Explanation |
|---|---|
| 3 (b) | The applicant has been the lessee operator of all exploration or mining work on the 50 unpatented claims which has been done since June 19, 1962. |
| 3 (c) | Production from said porperty since June, 1962, has been 173 flasks of mercury, proof of which is supported by copies of settlement sheets attached as Exhibit G. Past production from said property is reported in part in the report attached as Exhibit D. Other production is unknown to your applicant. |
| 3 (d,e,f,&g) | See report attached as Exhibit D. |
| 4 (a) | The OME representative should contact the President of the applicant, Thomas E. Bolich, at 1604 Farmer Avenue, Tempe, Arizona, Telephone number WO7-3231, or at 112 South Country Club Drive, Mesa, Arizona, WO4-2382; or the Secretary of the applicant, Roy B. McGraw, at his home, 1448 West Fourth Place, Mesa, Arizona, telephone number WO4-9234, or 61 North Country Club Drive, Mesa, Arizona, telephone number WO4-4541. Access to the property is from the Phoenix-Mesa area, Arizona, takethe Beeline Highway toward Payson for approximately 50 miles, and the mining property lies off the highway approximately 3 miles by private road. There are no markings, however, at the entrance to the property. |
| 4 (b) | Shipping and supply point is Mesa, Arizona, approximately 53 miles. |
| 5 (a) | The exploration work proposed is described on Exhibit H. |
| 5 (b) | The applicant has previously built an access road. No additional roads will be required. |
| 5 (c) | Exploration work will commence within 90 days after OME contract is executed. The anticipated average daily or monthly rate of progress for each type of work is shown on Exhibit H. |
| 6 | The applicant has been in operation of building access roads exploring and operating open pitmines work since June, 1962, on the subject property. The exploration work will be conducted and supervised by Thomas E. Bolich, whose background includes open pit coal mining, two years; underground tunneling, shaft driving and airways, 5 years; lead, copper, gold mining, 2 years; mercury mining and exploration work, 9 years. |
| 7 (a,b,c,d, e,f,g) | Details of cost is shown on Exhibit H. |

EXHIBIT A
Big Sam Mines, Inc.
112 S. Country Club Dr
Mesa, Arizona

# VALLEY NATIONAL BANK

WEST SIDE OFFICE 61 NORTH COUNTRY CLUB DRIVE MESA, ARIZONA

July 2, 1964

Big Sam Mines, Inc.
112 South Courty Club Drive
Mesa, Arizona

ATTENTION: Mr. Thomas E. Bolich, President

Gentlemen:

We have your recent request for a loan in the amount of $250,000.00 to be repaid over a ten year period with funds to be used for Mercury exploration.

Current policy of this Bank does not permit loans to be made for terms of ten years as you requested. Further, we do not feel we can enter into a venture with such a high degree of speculation. After just consideration it is the unanimous decision of our Committee that we decline your request.

We are returning herewith your Financial Statement and all allied papers.

Very truly yours,

ASWahl

Manager

A. S. Wahl
gd

Enclosures

PROTECT YOUR FAMILY — APPOINT THE VALLEY BANK AS YOUR EXECUTOR AND TRUSTEE

EXHIBIT B
Big Sam Mines, Inc.
112 S. Country Club Dr
Mesa, Arizona

MEMBER FEDERAL DEPOSIT INSURANCE CORPORATION

THE Arizona BANK

BRANCH OFFICES: BISBEE CHANDLER DOUGLAS GLENDALE MESA PEORIA PHOENIX SCOTTSDALE TEMPE TOMBSTONE TUCSON YUMA

July 8, 1964

REPLY TO/ P. O. Box 767
Mesa, Arizona

Big Sam Mines, Inc.
112 South Country Club Drive
Mesa, Arizona

ATTENTION: Mr. Thomas E. Bolich, President

Gentlemen:

I am writing you with reference to your recent application for a loan in the amount of $250,000.00 with a requested amortization period of ten years, for the purpose of Mercury exploration.

Our lending policies do not permit extensions of credit in this area, due to the high degree of speculation naturally inherent in this type of venture.

We are enclosing Financial Statements and other supporting documents.

Very truly yours,

Virgil S. Duffy, Jr.
Manager

VSD:nlg

Enclosures

FORMERLY THE BANK OF DOUGLAS

EXHIBIT D
Big Sam Mines, INc.
112 S. Country Club Dr.
Mesa, Arizona

# REPORT

# SUNFLOWER GROUP
# of
# MERCURY CLAIMS
# ARIZONA

SUNFLOWER PROPERTIES
GOODRICH BUILDING
PHOENIX, ARIZONA

EXTRA COPY
O. M. E.
RECEIVED AUG 27 1964
DATE
INITIALS
CODE

This printed report is a direct copy of the engineers' original report compiled as of July, 1949, under the direction of L. Mills Beam, for the owners of the Sunflower Group of Quicksilver claims. The original is on file at the Office of the Secretary, Sunflower Properties, Goodrich Building, Phoenix, Arizona.

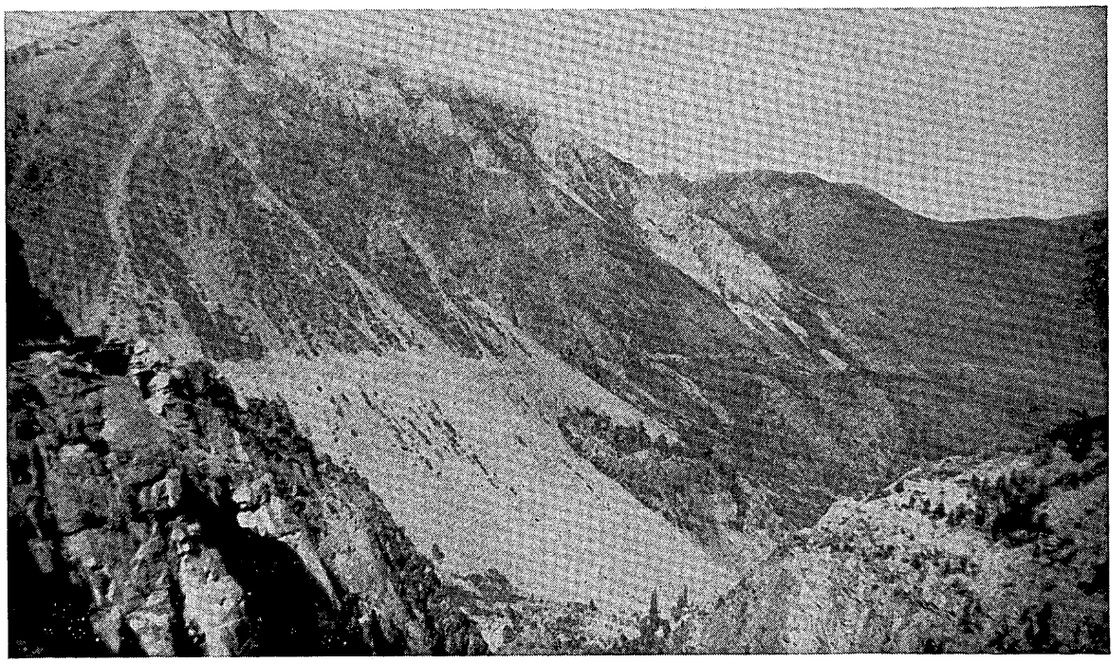

*Along Bush highway with road in the distant*

*Camp showing heavy wooded section*

*Telephone*
ORchard 7-5345

# Beam Smelters

★ ★ ★ 10535 BUFORD AVENUE ★ INGLEWOOD, CALIFORNIA

July 30th, 1949

Sunflower Properties Inc.
515 Goodrich Bldg.
Phoenix, Arizona Attention: Mr. C. L. Dufur, Chairman of the Board:

Gentlemen:

Herewith I am handing you report on the Sunflower Group of mining claims located in Maricopa County, Arizona; attached thereto is a complete map of the claims and a map of the underground workings on the Passover and Go-By claims.

The cinnabar deposits on these claims are found in the schist and are impregnated in the schistos shear zones which can be traced for miles, and is intricately mixed in the schist, and appear with a finely dessimated yellow mineral, probably a mercury chloride and iron oxide. The ore bearing zone as a whole cuts across the rocks without regard for their structure and is well defined so that mining at deeper levels can be planned systematically, and the values show that there is a definite increase as depth is reached, and it is my belief that when this Sunflower property is opened up it will be one of the largest producers of mercury for many years to come. The possibilities of such a property are worthy of consideration of any reliable operator.

There are two methods of operating a property of this magnitude. Under the power shovel method of mining, open-cutting, and large enough furnaces to accommodate open pit mining, there is now ore available for 700,000 tons that will average better than 3.2 lbs. of mercury per ton, valued at $2,240,000.00; the probable ores with only surface exposure and estimating tonnage, would exceed 2,354,000 tons. The other method of working this property would be to concentrate on the higher grade ore veins which are definitely present as shown by the report. I have approximated the number of tons of such ore at a conservative figure of 166,429 tons that could be held at 32.5 pounds per ton, the present market value gross $5,408,942.50.

Allowing adequate mining and administration costs, depletion and taxes, the power shovel method would show a return of 8.6% net profit; the second method, that of mining principally the better grades of ore, will show a profit of 21.9%, leaving in reserve and stock piling the lower grades to be handled at some future date. In either method it would take many years to exhaust a natural supply of this type. At the present time we have a tariff protection of $19.00 per flask on foreign mercury. The present belief that a surplus supply situation has developed in the United States has caused a reduction in Government purchases of Mexican, Canadian and domestic, but this is false information, as the majority of retailers admit that they are not carrying as large stocks as they should, and if they did stock up, it would create a shortage which would take many months to try and balance.

There are many industries laying plans at the present time to increase the use of mercury. One company we know quite well is the P. R. Mallory Company of Indianapolis, Ind., which has perfected, during the recent war, a long life dry cell battery using mercury as one of its principal components; they are now preparing to reach the domestic consumers and have more business lined up than they can adequately take care of. Also, there is another large corporation which has perfected mercury motors, and is now seeking a source of mercury in reserves. I might add that mercury is used in hearing aids, fire alarm equipment, portable radio sets, guided missiles, stratosphere rockets, electric switches, and gold mining, of course, and many other uses including medicinal.

On a property of this size it would be my recommendation to proceed with plans for operation on either of the two plans suggested, as it would seem to be a sound undertaking with large possibilities.

Yours very truly,

(Signed) L. MILLS BEAM

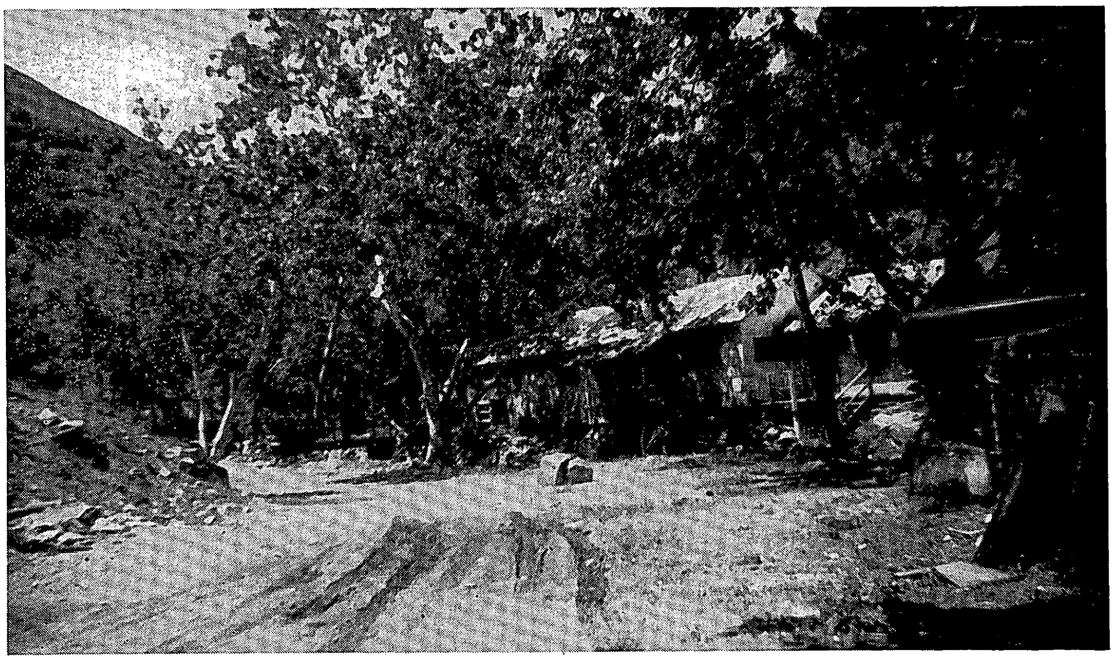

*Substantial building and pleasant camp sight*

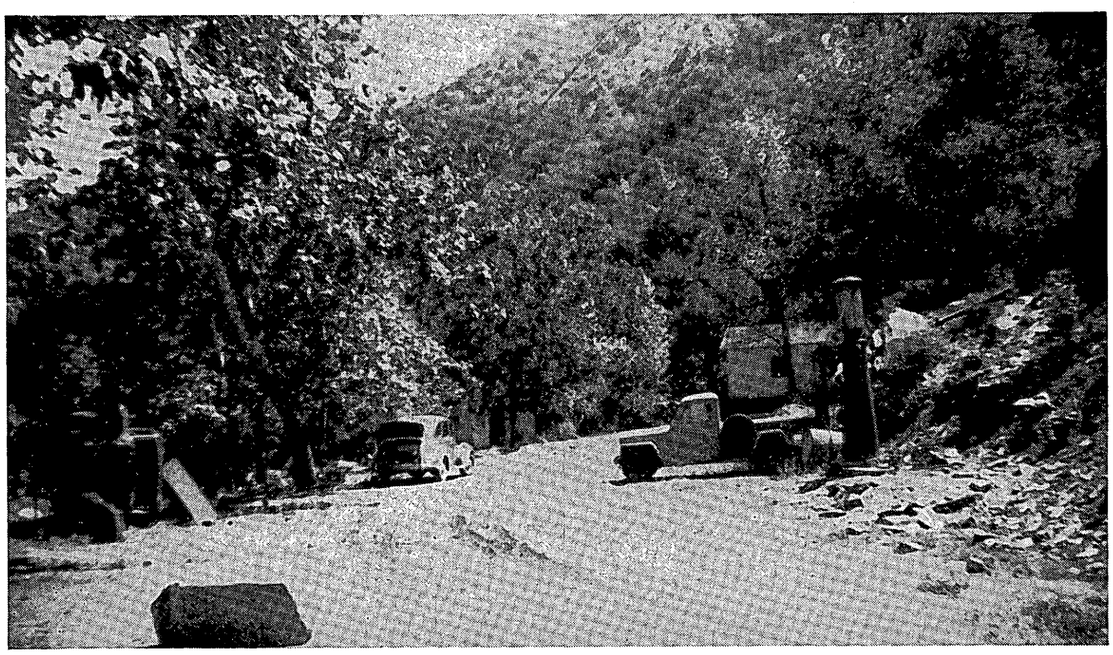

*Showing entrance to camp coming from Bush Highway*

Report by: Major E. Allured
Mining Engineer
Los Angeles, California

## SUNFLOWER GROUP OF CLAIMS

Sunflower Mining District on Mazatzal Range, Maricopa County, Arizona; about 82 miles from Phoenix over Bush Highway, on Sycamore Creek, with 3 miles of road over the property from highway to camp.

*Location:* There is surveyed and under construction an improvement in the road leaving Tempe and joining the Bush Highway going past the mine, which will shorten the distance from Phoenix by some 20 miles, as set out by the Highway Engineer to me. The road from the Bush Highway over the mine property to the camp is passable and can, with little expense, be made a good mine road. There are telephone connections on the property that can be reinstated, giving connections to rangers' station and nearby cities.

The property consists of 50 claims held by location and all surveyed for patent by mineral land surveyor with maps, properly tied in to U. S. Geological survey stakes. Names to the claims are all listed on maps attached.

*Geology:* Here I refer to the U. S. Geological Report of the Bureau of Mines by F. L. Ransome, Quicksilver Deposits of the Mazatzal Range Arizona, U. S. Survey Bulletin No. 620, and

University of Arizona Bulletin No. 122, Quicksilver Resources of Arizona, Tucson, June 1st, 1927, by Carl Lausen and E. D. Gardner.

Both of these publications cover the district exceptionally well. As Bulletin 122 is out of print, included here are copied extracts from this Bulletin with acknowledgments.

Also included is a copy of a portion of the report of Eldred D. Wilson, Geologist with the University of Arizona at Tucson. The balance of his report covers other properties in the district; not included.

Included herewith is a photostatic map of the district showing the geological formation, and a claim map showing location of samples taken.

*Equipment:* The surface equipment is living quarters, and buildings used for power house and office with assay laboratory; other buildings are cook house, mess hall, with cook's living quarters, and office attached, the telephone is there; 3 double houses and 8 single houses, one double house not finished—all new material—and two storage rooms; one underground, cemented; all machinery has been removed.

*Water:* Water for domestic use is from a spring above the camp piped in, and for milling purposes is also from springs and creek, when running, and from mine shaft pumped to storage tanks above mill. The records indicate there was sufficient water for all purposes.

*Rainfall:* The precipitation here is seasonal. During the winter months there is snowfall and in the summer there are the usual torrential downpours and thunderstorms.

*Climate:* The climate conditions are very mild in the summer, and the winter has some snow. Unless a severe winter, the snow lasts but a few days after a storm. The work can be carried on the year around as the elevation is 4600 feet at camp.

Around the camp it is fairly heavily wooded, with some large trees of black walnut, sycamore, cottonwood and cypress, some small varied brush with occasional juniper. It seems the earlier retorting was fired with oak and cypress.

*Topography:* The topography is very rugged and consists of deep V-shaped canyons separated by high ridges. The Sycamore Creek flows south across the schistose structure.

*History:* The history of the mercury occurrence in this district dates back to 1911. The Sunflower Group has had other names and several operators and, from all the records available, shows over 2000 flasks have been recovered. In the one period from May 4th, 1929, to July 22, 1931, there were recovered 1438 flasks, with some 225 flasks prior to this by small operators, while since 1931 other operators have recovered, from varied reports, a total of several hundred flasks.

I note from an Engineer's, a Mr. Bedford, field notes he has estimated that less than 1% of the ore on this group of claims has been mined, and from my observation, I am inclined to agree with him. It appears that the property has merely been scratched, or work enough done so far to see the magnitude of these ores. There is only one place the records show development from the underground maps where the shaft is 250 feet deep with laterals but a few hundred feet; all other workings are shallow.

*Development:* No systematic development has been done and there is no ore blocked, and I don't believe ever has been. It appears they ran the ore as it was encountered, with the exception of one place where the shaft is located on the Pack-over and Go-By claims there was some stopping from the 150 level, some from the 100 level, and some from the 50-foot level. This last mentioned is where the work was done too close to the shaft and weakened the head frame footings. It will be quite expensive to catch up this place, and far more economical

to enter the ore reserve above the shaft collar and to the east for about the next 1000 feet by using the No. 4 tunnel leading off the road to the mine, which is around the same elevation as the shaft collar, and mine the ore from the hill above through that entrance by shrinkage system or some other, as the engineer in charge decides.

This block of ore from the road level and tunnel entrance over the hill toward the west to the shaft is about 1000 feet and rises to around 200 feet over the hill with a vein structure of 70 feet in width. This block has some 700,000 tons of ore, and will supply a large mill for at least 2 years' operation with ore that samples show will run from 2 lbs. of mercury to 3.8 lbs. to the ton, while other development can be underway. This ore seems to be quite uniform through the vein where it can be sampled, as the only face at present is just east of the hoist house and shaft, and surface exposures over the hill. This vein structure or shear zone, as it appears, is very consistent throughout the entire claims, a distance of seven claim lengths, or around 10,000 feet, with the work on the two claims where the old shaft and hoist is at the deepest. Other openings show good ore on Sunnyside, Wabash, Mercury and Blackrock, along this structure.

This large ore structure running northeasterly and southwesterly stands nearly perpendicular and is badly broken up. Observing it from the only face available at the old hoist house on the Go-By claim, it shows the movement to fold from north to south, or from one wall to the other every few feet. No doubt, this will designate the mining methods selected by the engineer in charge.

There is other ore of much higher grade on the claims that is not within this same shear zone, but occurs in quartz seams from ½ inch to several inches in width, heavily laden with the cinnabar crystals. These quartz seams make up a vein structure within the schist of from 3 to 5 feet of mineable ores. Some of this ore has retorted 14 lbs. to the ton, and some places much higher. The richest ores were found on the Sunnyside and the Cornucopia; one place there was taken out 146 flasks in a pipe 30″ for 50 feet.

It is not possible to get into all the workings and really do the property justice. The sampling cuts could have been longer otherwise. This is due to obstructions caused by the period of time since the last work was done, but with little labor in reopening a better observation could be had.

On this large structure a quite interesting observance is the reaction of Radioesthesic. This same ore as on the surface with the cinnabar crystals gives a reaction to around 600 to 800 feet below the No. 4 tunnel and road level. No other place on the properties was the ore structure amenable to geophysical determination due to scattered ore interference outside the structures when trying for depth, with Radioesthesic.

A few well pointed diamond drill holes would prove very interesting.

It was with a great deal of pleasure that I was given the opportunity to visit this property, that will once again surely be a big producer of Quicksilver.

Respectfully,

(Signed) MAJOR E. ALLURED, M. E.

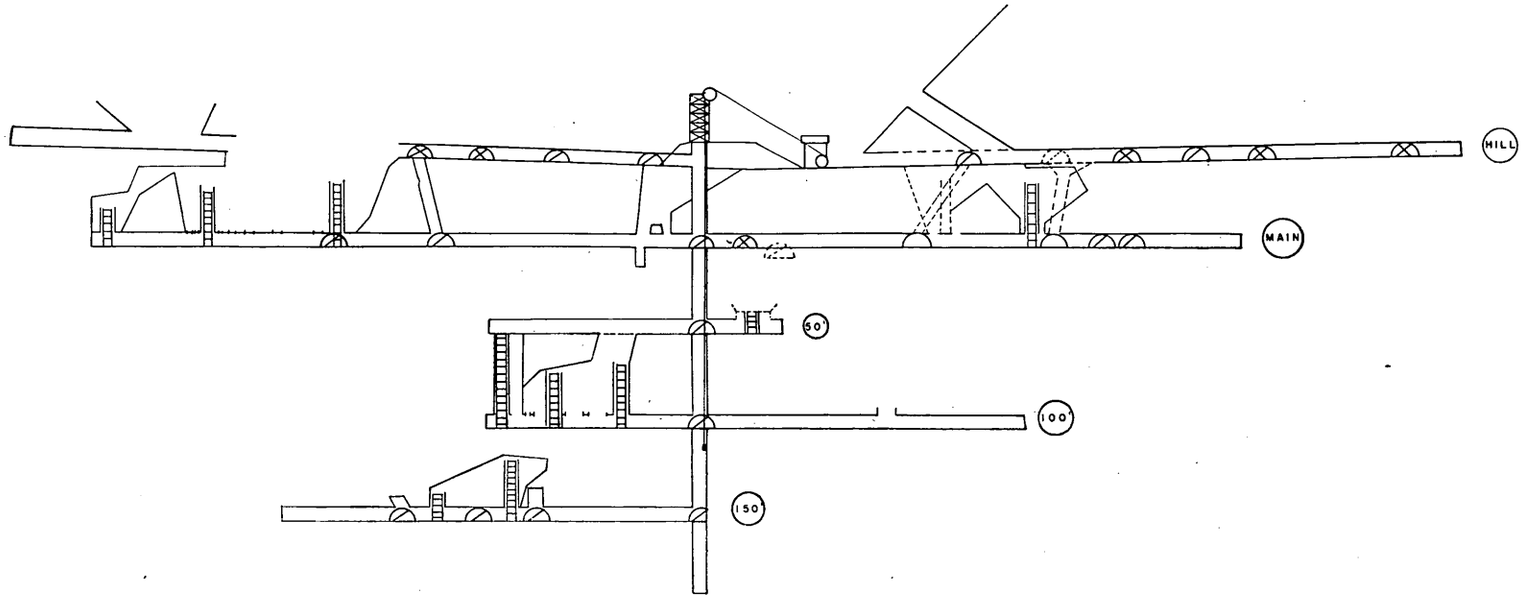


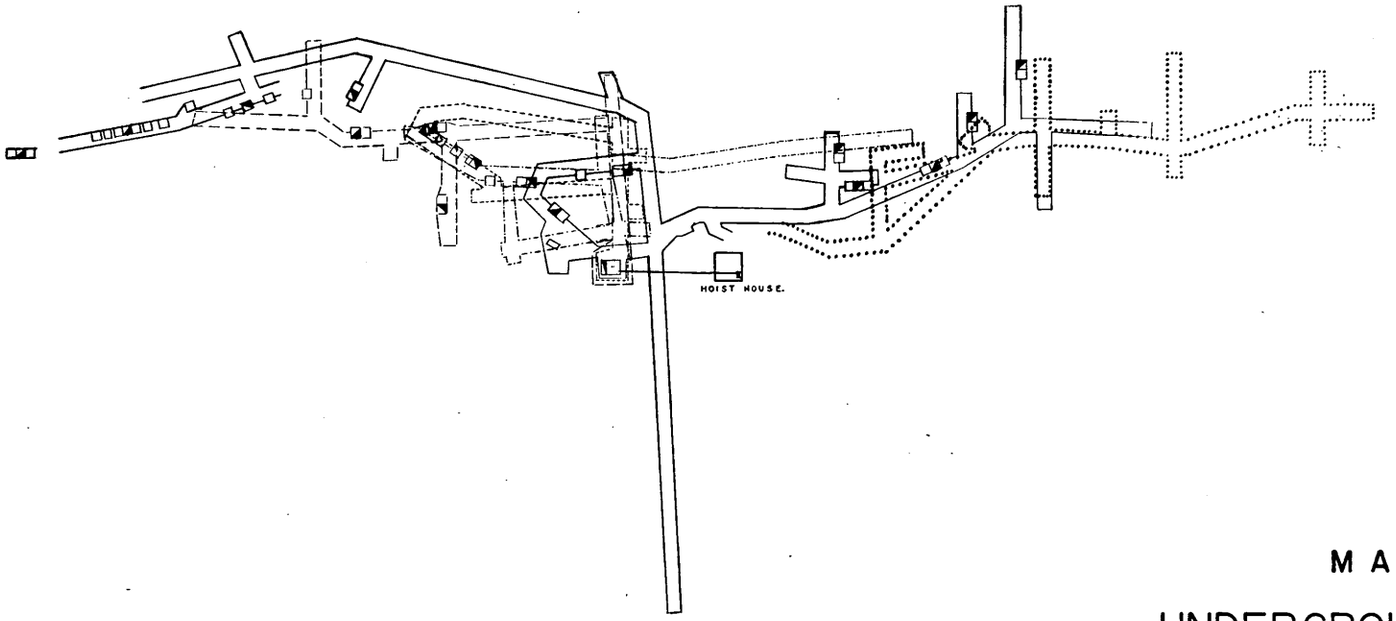


| LEGEND | |
|---|---|
| ..... | HILL |
| ———— | MAIN |
| - - - - - - | 50 FT. |
| -·-·-·- | 100 FT. |
| — — — — | 150 FT. |

# MAP OF UNDERGROUND WORKINGS

## PASSOVER AND GOBY CLAIMS

## OF THE SUNFLOWER GROUP

TRACED BY MAJOR E ALLURED, M.E.

## June 14th to 21st 1949

Samples taken at this time with locations and also plotted on attached map of claims, were as follows:

| | Mercury % | Mercury Lbs. per ton | Gold | Silver |
|---|---|---|---|---|
| No. 1 GO-BY CLAIM | | | | |
| 22-ft. cut on face East of Hoist House | .17% | 3.4 | | |
| No. 2 GO-BY CLAIM | | | | |
| 6-ft. cut East of Hoist House | .22% | 4.4 | | |
| No. 3 GO-BY CLAIM | | | | |
| Summit East of Shaft, 4-ft. cut, no work | 1.25% | 25.0 | | |
| No. 4 GO-BY CLAIM | | | | |
| 300 ft. East of Shaft, 3-ft. cut surface, no work | .80% | 16.0 | | |
| No. 5 TITANIC CLAIM | | | | |
| 400 ft. West of Shaft, 4-ft. cut in drift | .60% | 12.0 | | |
| No. 6 PACK OVER CLAIM | | | | |
| 500 ft. West of Shaft, 5-ft. cut on surface | 1.23% | 24.6 | | |
| No. 7 PACK OVER CLAIM | | | | |
| 4-ft. cut on surface | .16% | 3.2 | nil | trace |
| No. 8 BLACK ROCK CLAIM | | | | |
| 3½-ft. cut on surface | .40% | 8.0 | trace | .10 oz. |
| No. 9 CORNUCOPIA CLAIM | | | | |
| 3-ft. cut of a 20-ft. vein 300 ft. in drift | .30% | 6.0 | | |
| No. 10 CORNUCOPIA CLAIM | | | | |
| Bottom of pipe cut 3 ft. | .58% | 11.6 | trace | .80 oz. |
| No. 11 SUNNYSIDE CLAIM | | | | |
| Main outcrop 4 ft. wide | 1.67% | 33.4 | | |
| No. 12 SUNNYSIDE CLAIM | | | | |
| Outcrop 4-ft. cut 200 feet from No. 11 | .27% | 5.4 | | |
| No. 13 MERCURY CLAIM | | | | |
| About 2-ft. cut on surface | 4.22% | 84.4 | | |
| No. 14 CORNUCOPIA | | | | |
| Bottom of pipe | Manganese ore | 13.28% | | |
| No. 15 SUNNYSIDE CLAIM | | | | |
| Highgrade ore 6 inches wide | 5.96% | 119.2 lbs. | | |
| No. 16 TITANIC CLAIM | | | | |
| Highgrade ore cut 4 inches | 3.16% | 63.2 | | |

The last two are merely specimens showing highgrade ore does exist.

Original certificates of assays are hereto attached.

## Estimate costs of Mercury Operation

| | Income per day | Cost per day | Profits |
|---|---|---|---|
| Production 15 flasks per day @ $83.00 present market | $ 1,245.00 | | |
| Operating expense, payroll 25 men @ $15.00 including board | | $375.00 | |
| Materials, powder, caps, fuse and supplies | | 100.00 | |
| Administration expense, legal, supt. and engineering | | 65.00 | |
| Depreciation on tools and repairs | | 50.00 | |
| Fuel oil, lubricating oil, oil for rotaries | | 50.00 | |
| Mine timbers and underground supplies | | 25.00 | |
| Unforeseen contingencies | | 43.33 | |
| Road work and new development | | 120.00 | |
| Royalties, 10% | | 124.50 | |
| | | $942.33 | |
| Daily income | $ 1,245.00 | | $1,245.00 |
| Expenses | | | 942.33 |
| Daily profits | | | $ 302,67 |
| 300-day operation per year | $90,801.00 | | |

350 to 400 tons daily operation such a plant would cost around $175,000.00 and operating on ore averaging 2 lbs. to 3.8 lbs. to the ton.

This return would give around 55% on the investment; should the market of mercury drop 10% to around $1.00 per pound, it would still leave a reasonable profit.

# EXTRACTS FROM UNIVERSITY OF ARIZONA BULLETIN NO. 122

## QUICKSILVER RESOURCES OF ARIZONA

### Page 60 Mazatzal Mountains Deposit Location (Written in 1927)

The Mazatzal Mountains, of the Basin and Range type, lie in the central portion of the State. They trend slightly west of north, extend from the Salt River on the south to the East Verde River on the north, and have a total length of about 50 miles. On the east side of the range is Tonto Creek which discharges into the Roosevelt Reservoir, and on the west side is the Verde River, a branch of the Salt River.

Cinnabar was discovered in 1911 on the west slope of this range on Alder Creek, about 6 miles north of the Sunflower Ranch. (See Fig. 10.) Within the last few years several promising deposits have been found on Slate Creek, on the east slope of the range. This mineralized belt trends nearly east and west and is approximately midway between the north and south ends of the range. As the summit of the range is the boundary between Maricopa and Gila counties, the deposits occur in both counties; those on the west side being located in Maricopa County.

### Climate and Vegetation

On both sides of the range the camps occur in deeply incised and steep-walled canyons and are surrounded by high peaks and ridges. The camp on Alder Creek is at an elevation slightly greater than 4,000 feet above sea level, while those on Slate Creek are somewhat under 3,000 feet. Even at the latter locality the summer heat is not excessive, and this is due largely to the greater elevation of the surrounding mountains which are an important factor in moderating the summer heat. During the winter months, however, snow falls frequently, but seldom remains on the ground more than a few days. The climatic conditions, therefore, are not likely to interfere with mine operations.

Rainfall, as in other parts of Arizona, is seasonal, and falls chiefly as torrential downpours during the summer months, and are usually accompanied by an intense electrical display. During the late autumn and winter the precipitation is chiefly as snow, and may be expected in the spring months even as late as the first of April. No records are available of the precipitation in this immediate vicinity, but it is probably greater than 15 inches per annum. In both Slate and Alder creeks water for domestic purposes is available throughout the year except following an exceptionally dry season, and even then some clear, cool water may be obtained from shallow wells sunk in the banks of the streams.

The vegetation in this vicinity is quite varied, and consists of a variety of trees, brush, and grasses. On Pine Mountain and on the upper slopes of Mount Ord is a good stand of yellow pine. At lower elevations and usually in sheltered ravines on the north sides of the higher points is an abundance of cypress. This occurs within easy reach of all the prospects and is the best wood available for mine timbers. A considerable stand of live oak and an occasional juniper are to be found at elevations around 4,000 feet. In the past oak wood has been used to fire the retorts. The slopes of the hills, especially at lower altitudes, are clothed with a dense growth of brush. Only a few of the species of brush occurring here are of value as feed for cattle, and as a whole they are a great hindrance to the prospector.

### Topography

The topography is rather rugged and consists of deeply incised, V-shaped canyons separated by high ridges. Both Alder and Sycamore creeks flow south across the schistose structure, while Slate Creek nearly parallels this structure. At the camp on Alder Creek the canyon is 1,000 feet deep and the slopes approach the critical angle for rock slides. The hardness of the rock has influenced the roughness of the topography; where slates outcrop, the hillsides are smooth and have rounded slopes, but, where rhyolite porphyry or jasper outcrop, cliffs predominate.

Nearly everywhere there is some evidence of recent uplift and rejuvenation of the streams. This uplift probably took place at the close of the Tertiary period.

### General Geology

The quicksilver deposits in this region were examined by Dr. F. L. Ransome in the autumn of 1914 and his report was published by the United States Geological Survey.[1] Since Ransome's report was issued considerable development work has been done and many additional claims located. The deposits on Slate Creek have been located in the last few years.

The southern half of the Mazatzal Mountains conists almost entirely of granitic rocks that locally may be somewhat gneissic, and are probably entirely pre-Cambrian in age. Near the extreme southern end of this range where the Roosevelt Dam was constructed across the Salt River is an excellent section of Paleozoic rocks. This section consists of quartzites and limestone of the Apache Group, and Devonian and Mississippian limestones.[2] These Paleozoic rocks, however, are limited to a small area in these mountains, but originally extended many miles farther north.

[1]Ransome, F. L., Quicksilver Deposits of the Mazatzal Range, Ariz.: U. S. Geol. Survey Bull. 620, pp. 111-128, 1916.
[2]Ransome, F. L., Some Paleozoic Sections in Arizona and their Correlation: U. S. Geol. Survey Prof. Paper 98-K, pp. 149-152, 1916.

On the north slopes of Mount Ord the granitic rocks have invaded pre-Cambrian crystalline schist, and from Slate Creek northward the basement of the range consists of these metamorphic rocks. From Mazatzal Peak to North Peak a massive-bedded and highly indurated quartzite rests unconformably on the upturned edges of the crystalline schists. This formation has been described by E. D. Wilson;[1] and it was by him assigned to the pre-Cambrian and correlated with the Grand Canyon series.

At lower altitudes, on the west side of the range, the older rocks are locally covered by volcanic flows and associated tuffs. Volcanic rocks are rare on the east slopes of these mountains and only a single occurrence of lava was observed. This consisted of a flow of basalt intercalated in conglomerate on Slate Creek. On both sides of Tonto are numerous exposures of buff sandstone and red and green shales which in places are gypsiferous. These sediments and volcanic rocks are probably of late Tertiary age. The youngest formation in this vicinity consists of Quaternary gravels and sands, and caps the Tertiary sediments mentioned above.

## Metamorphic Rocks

In the immediate vicinity of the quicksilver prospects the prevailing rock is a crystalline schist that varies considerably both in mineral composition and texture. Quartz-sericite schist and brown slate predominate, but in addition chlorite schist, quartzite, and a dolomitic marble have been found. A massive vermilion-red jasper and a schistise rhyolite-porphyry form a part of this pre-Cambrian crystalline complex.

When Ransome[2] examined the quicksilver prospects in this region he found that the schists could be subdivided into eight zones arranged symmetrically on each side of the jasper as a central axis. The relations of these zones to each other are shown diagrammatically in Fig. 11. He says: "It will thus be seen that in the southwestern part of the quicksilver belt the distribution of the rocks is such as to suggest that the jasper zone occupies the axis of a compressed syncline or anticline. Towards the northeast, on the east slope of the Mazatzal Range, the symmetrical arrangement of the rock zones is less evident."

The strike of the schistosity varies somewhat from place to place, and in Alder Creek is from 43° to 70° east of north, while on Slate Creek it is more nearly east and west. The dip of the schistosity is usually at steep angles to the northwest, but exceptions to this prevailing northwest dip were noted at several places. Surface creep is very pronounced on these steep slopes and often extends for a distance of 15 or 20 feet below the surface. This has sometimes misled prospectors, who do not know the cause of this phenomenon, and has led them to believe that their vein dips into the hillside at a low angle.

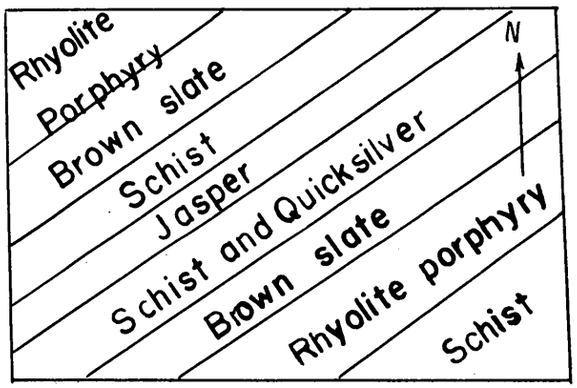


*Fig. 11—Sketch showing relative positions of the schist zones, Mazatzal Mountains.*

Quartz-sericite schist is the most abundant type of metamorphic rock in the district. It varies in composition from a quartzite containing a little mica to a light-colored phyllite in which mica predominates. Other mineral constituents are present, but only in minute quantities, and are unimportant in the classification of these rocks. A notable exception is at Baker's camp on Slate Creek where this variety of schist contains considerable calcite and a small amount of chlorite.

The brown slate is a fine-grained rock with a well-developed parting along which the rock cleaves readily. Although the mineral constituents are of small size, quartz and sericite were determined microscopically, and the brown color is due to a ferruginous pigment, probably the mineral hematite. Banding due to slight differences in composition may represent bedding planes, and near the Cornucopia claim this feature indicates that the schistosity makes an angle of approximately 45° with the original stratification.

An area of chlorite schist is well exposed on the Packover and Go-By claims of the Sunflower Group. The rock is of a dark greenish color, and does not cleave as readily as the other mica schists or brown slates. The rock consists largely of chlorite and quartz, but small amounts of magnetite, sericite, and limonite are present. Some thin sections consist entirely of angular fragments of andesite and suggest that the rock was originally a volcanic tuff or breccia. A little red jasper was found associated with this variety of schist.

[1]Wilson, E. D., Proterozoic Mazatzal Quartzite of Central Arizona: Pan-American Geologist, Vol. 38, pp. 299-312, 1922.
[2]Ransome, F. L., Quicksilver Deposits of the Mazatzal Range, Arizona: U. S. Geol. Survey Bull. 620, p. 117, 1916.

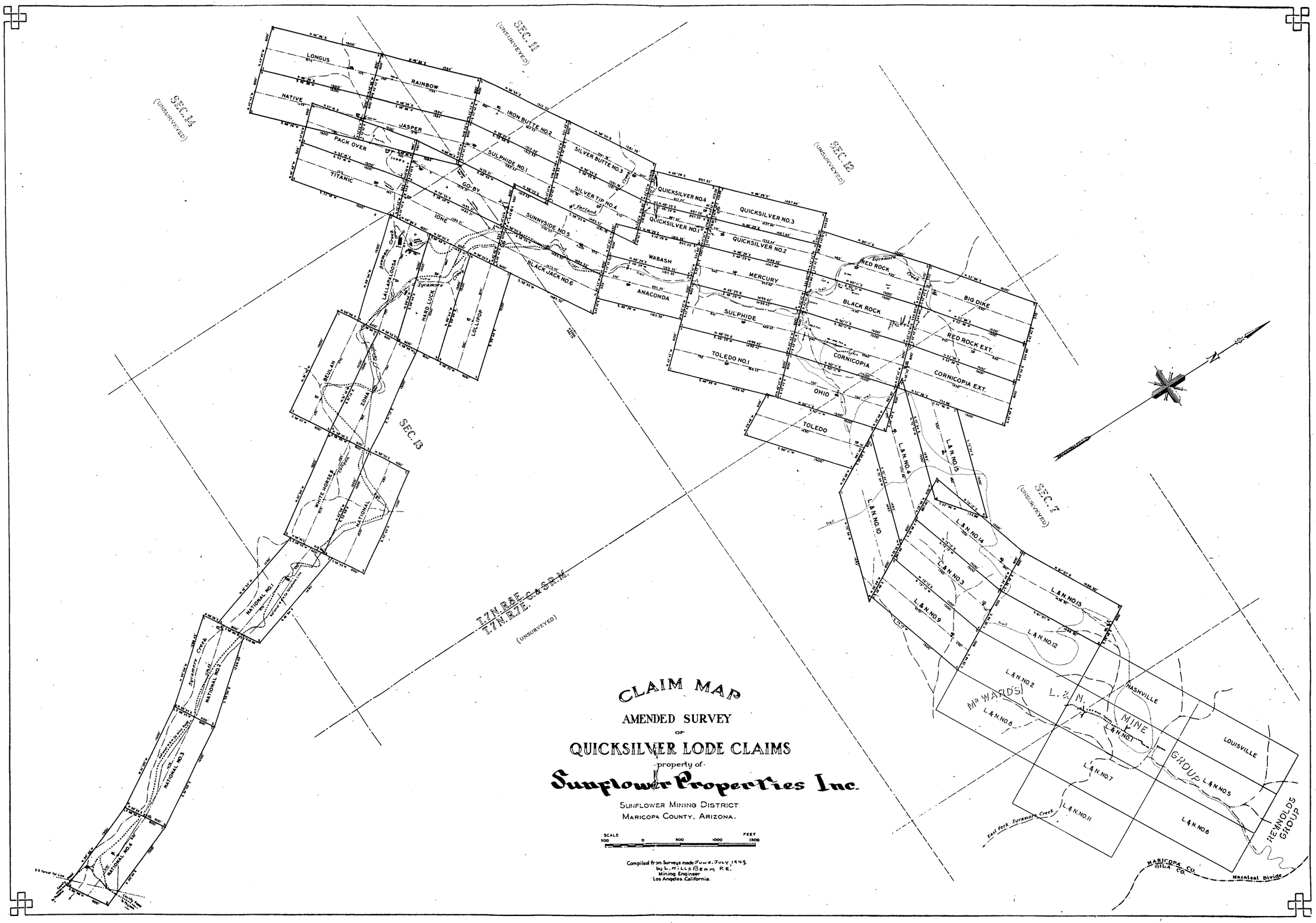
CLAIM MAP
AMENDED SURVEY
OF
QUICKSILVER LODE CLAIMS
property of
Sunflower Properties Inc.
SUNFLOWER MINING DISTRICT
MARICOPA COUNTY, ARIZONA.
SCALE
500 0 500 1000 1500 FEET
Compiled from Surveys made June & July 1949.
by L. Mills Beam P.E.
Mining Engineer
Los Angeles California.
SEC. 14 (UNSURVEYED)
SEC. 15 (UNSURVEYED)
SEC. 16 (UNSURVEYED)
SEC. 13
SEC. 7 (UNSURVEYED)
T.7N.R.8E.G.&S.R.M.
T.7N.R.7E.G.&S.R.M.
(UNSURVEYED)
LONGUS
NATIVE
RAINBOW
JASPER
PACK OVER
TITANIC
IRON BUTTE NO.2
SULPHIDE NO.1
SILVER BUTTE NO.3
SILVER TIP NO.4
CO-BY
IONE
SUNNYSIDE NO.5
BLACK JACK NO.6
QUICKSILVER NO.4
QUICKSILVER NO.1
QUICKSILVER NO.3
QUICKSILVER NO.2
WABASH
ANACONDA
MERCURY
SULPHIDE
TOLEDO NO.1
OHIO
TOLEDO
RED ROCK
BLACK ROCK
CORNICOPIA
BIG DIKE
RED ROCK EXT.
CORNICOPIA EXT.
LALLAPALOOSA
HARD LUCK
LOLLIPOP
BEULAH
ZONA
WHITE HORSE
NATIONAL
NATIONAL NO.1
NATIONAL NO.2
NATIONAL NO.3
NATIONAL NO.4
L&N NO.4
L&N NO.5
L&N NO.10
L&N NO.14
L&N NO.3
L&N NO.9
L&N NO.13
L&N NO.12
L&N NO.2
L&N NO.8
L&N NO.1
L&N NO.7
L&N NO.11
L&N NO.6
L&N NO.5
MR WARDS L.&N. MINE GROUP
NASHVILLE
LOUISVILLE
REYNOLDS GROUP
East Fork Sycamore Creek
MARICOPA CO.
GILA CO.
Natural Divide
Sycamore Creek
Sycamore
Trail

The volcanic rocks in this region are a part of the extensive lava field occurring to the northwest of the Mazatzal Mountains. In this region, as in many other parts of the State, the volcanic rocks are probably of Tertiary age; and the andesites are undoubtedly older than the basalts exposed in the banks of Slate Creek.

## Ore Deposits

At the time of Ransome's visit, in the autumn of 1914, very little development work had been done; and, although considerably more underground development work has been completed since then, the deposits are still to be considered as prospects rather than developed mines. Several new groups of claims have been located in the last few years, but only location and assessment work has been done on them.

The distribution of the groups of claims located for cinnabar is shown in Fig. 12. An inspection of this map shows that there are three distinct belts or zones of mineralization: The Alder Creek belt; Sycamore Creek-Pine Mountain belt; and the Slate Creek belt. In general, these groups of claims closely parallel the schistosity.

On the Sunflower Group Ransome[1] recognized three approximately parallel lodes which are several hundred feet apart. The central or Packover lode is probably continuous with the ore found on the Cornucopia claim of the Robbins Group and may extend northward to Bowman's claims. Recent development work has shown that this lode consists of fairly well-defined ore shoots lenticular in plan, with a pitch to the southwest.

These lenses do not have clear-cut walls nor were they found to follow well-marked fissures except in a few instances. Where mineralization has occurred along faults, the cinnabar is often in one or both walls and decreases with increased distance from the fracture.

Faulting both earlier and later than the metallization was observed. The earlier faulting seems generally to have a northeast trend. The few lenses of ore found on the Cornucopia claim are along these northeast faults. A clear-cut example of later faulting was observed on the Go-By claim. Here the ore body was displaced by a northwest fault.

The ore consists of veinlets cutting the schists or as thin films on fracture planes. Some disseminated cinnabar in the body of the schist was also observed. The veinlets vary in width from a fraction of an inch to 6 inches or more, but a vein with a width of 2 inches or more is exceptional. Usually these small stringer veinlets are parallel, and when abundant enough the rock constitutes ore. Much of the mineralized schist observed carries so few of these small veins that careful sorting must be practiced to make a good grade of furnace ore. Tiny veinlets of cinnabar sometimes occur on fracture planes across the schistosity. Such specimens are very spectacular, as the cinnabar covers broad areas; and the tendency is to overestimate the grade of such ore.

Cinnabar is the only important quicksilver mineral in the ore, although small amounts of the chloride, calomel, and native quicksilver have been found. Metacinnabarite may be present in small amounts. An unknown gray mineral was found associated with cinnabar in polished surfaces of ore. This mineral is slightly harder than cinnabar and may be tetrahedrite, but this could not be determined positively as the amount of it found was too small to be tested separately. Pyrite is abundantly associated with cinnabar in ore from the lower tunnel on the Cornucopia claim. Cinnabar was found to fill fractures in the pyrite and has probably replaced this mineral to a slight extent. However, a crystal of pyrite surrounded by cinnabar was found in ore from the Sunnyside claim, and the pyritohedral faces on this crystal showed no evidence of replacement; and the pyrite is undoubtedly the earlier of the two minerals associated with the cinnabar ore from Slate Creek and on Alder Creek. Mr. Wesley Goswick, whose claims are on Slate Creek, gave the writers a specimen of stibnite and reported that it came from near his quicksilver claims. No stibnite was found associated with cinnabar in any of the specimens of ore collected from this district.

Gangue minerals consist chiefly of quartz, calcite, and a ferruginous carbonate. A small amount of serpentine was found in ore from the Red Bird Group on Slate Creek, and sericite occurs with quartz in ore from the Cornucopia claim. Tourmaline occurs as a gangue mineral in tiny veinlets closely associated with quartz and cutting the ferruginous carbonate. This black tourmaline is not abundant as a megascopic constituent of the ore, but is more widespread as microscopic needles. Quartz is by far the most important gangue mineral and occurs in two generations, both of which contain tourmaline. This quartz is always of a milky-white color and incloses numerous minute inclusions, circulate in outline and arranged in rows like a string of beads. The ferruginous carbonate was tested chemically and found to contain considerable iron and lime and a small amount of magnesia. It probably contains both the ankerite and siderite molecules, and on weathering leaves a residue of limonite.

An intergrowth of this carbonate with quartz produces an interesting structure which, in many respects, resembles the columnar structure in lavas. This is shown in the illustrations on Plate X-A. The columns are often curved and extend across the vein from wall to wall. They do not consist of single crystals, but rather as interlocking grains of quartz that do not even have the same crystallographic orientation.. This columnar structure is not to be confused with the typical comb structure so commonly associated with crustification. There is no banding due to crustification in the quicksilver veins of this district, and drusy cavities are rare. Some of these cavities are transverse to the walls of the vein and are lined with crystals of quartz; others are irregular in outline with sharp-pointed crystals of the carbonate on which cinnabar has been deposited.

The intimate intergrowth of quartz, carbonate, and tourmaline suggests that they were probably formed at about the same time, but this intergrowth is traversed by a second generation of quartz veins with tourmaline.

[1]Op. cit., p. 119.

Bold outcrops of bright red jasper were seen north of the quicksilver deposits. The rock occurs as thin bands or layers in a pale yellow, dolomitic limestone. These bands are highly contorted and are often broken into angular fragments by the dynamic metamorphism that produced the schistosity. Occasionally the rock has a mottled appearance due to small white specks in a vermilion-red matrix, and is very striking in appearance, especially on a wetted surface. Small crystals of pyrite were found on a fresh fracture in some specimens.

A schistose conglomerate was observed on Alder and Sycamore creeks, and is a part of the quartz-sericite schist zone. The pebbles are all more or less angular, and comprise such rock types as rhyolite, andesite, banded quartzite, brown slate, and red jasper. The angularity of the fragments, which show no distortion due to deformation, suggests a local derivation and transportation for only a short distance. Microscopic examination showed the feldspars in the fragments of andesite to be remarkably fresh, although the ferro-magnesian constituents were entirely altered to chlorite.

Rhyolite-porphyry occurs as two broad bands traversing this district in a northeast direction, and more or less paralleling the schistosity. The rock is of a creamy-yellow color and porphyritic texture with numerous phenocrysts of quartz and feldspar visible on a weathered surface. The central portion of this intrusion is rather massive and shows but slight schistosity, while the borders have been compressed and recrystallized to a quartz-sericite schist.

Microscopically, the less sheared rock consists of phenocrysts of quartz, orthoclase, and acid plagioclase. Much of the feldspar is altered to secondary quartz and sericite. No original ferro-magnesian minerals remain, but the form of the alteration products suggests that biotite was an original constituent. The groundmass is microcrystalline and consists of quartz and orthoclase, with sericite and kaolin as secondary minerals. The more sheared portions of the rhyolite-porphyry consist of quartz and sericite, and the positive identification of this highly compressed portion rests on the gradational intensity of the shearing from the center to the borders of the intrusive.

A specimen of rock collected near the trail along Alder Creek was found to be an amygdaloidal basalt. The rock breaks readily in one direction showing that a rude schistosity has been developed, but the general appearance in a hand specimen closely resembles an igneous rock. The amygdules, which consist of calcite, apparently have not been distorted by the metamorphism to which the rock has been subjected. Examined in thin sections the rock was found to consist largely of alteration products. No feldspar or original ferro-magnesian minerals remain. The alteration products are quartz as irregular grains and tiny veinlets, chlorite, serpentine, sericite, limonite, and kaolin. Nests of serpentine may have been formed from original olivine. Much of the magnetite present may be original.

Most of the schist exposed in this region was derived from sedimentary rocks. This conclusion is based on the finding of a conglomerate, original bedding planes in the slates and quartzite, and the presence of limestone. Very likely all the quartz-sericite schist was formed from sediments. The rhyolite-porphyry, chlorite schist, and amygdaloidal basalt are of igneous origin.

This belt of schist continues northeastward to the northern end of the Sierra Ancha where the metamorphic rocks are overlain by a member of the Apache group of supposedly Cambrian age. The schists are therefore pre-Cambrian.

## Volcanic Rocks

The effusive rocks are abundant on the west slope of the range and usually occur as lava mesas. Saddle Mountain, about 4 miles west of the camp on Alder Creek, is such a mesa. Here Ransome[1] examined the various flows that make up this mountain and described them as follows:

> "The volcanic rocks under which the schist passes at its southwest end have a thickness of about one thousand feet on Saddle Mountain. At the base is a soft-brown tuff, andesitic or basaltic, with many schist fragments. This appears to be fifty to sixty feet thick. It is overlain by light-gray fine-grained andesitic tuff of approximately the same thickness. Above this lies about 200 feet of coarse andesitic tuff-breccia, the fragments being mostly a light-gray hornblende-biotite andesite. This is succeeded by about 300 feet of andesitic flow breccia, which appears to pass upward without recognizable plane of demarcation into a somewhat porous pink lava which, although resembling the dacite of the Globe-Ray region, proved on microscopic examination to be a fresh hornblende andesite with glassy groundmass. This flow or part of the flow is at least four hundred feet thick and forms the top of the mountain."

South of Red Rock Pass, between Sycamore and Slate creeks, the volcanic rocks have a total thickness of not over 700 feet. Here a well-stratified, brownish tuff, probably andesitic in composition, is the lowest member of the volcanic series observed in the vicinity of this pass; but, as the basement upon which it rests is not exposed, other flows may occur beneath it. This tuff is apparently present only on the west side of the pass, dips to the southwest at a low angle, and appears to fill a depression in an older topography. Above this tuff are flows of a light-colored biotite andesite with a thickness of at least 300 feet. On the east side of the pass a gravel rests on the eroded surface of these flows.

In the lower portion of Slate Creek is an exposure of olivine basalt intercalated in tilted conglomerate. The flow and conglomerate dip to the east at about 15°. Cliff sections along the stream show the basalt to have a thickness of between 80 and 100 feet. The rock is rather dark in color and very fine-grained, with olivine as the only megascopic mineral. This basalt has been thoroughly shattered and the fractures filled with innumerable veinlets of calcite.

[1]Op. cit., p. 117.

Pyrite is later than the quartz-tourmaline veinlets and was probably formed at the same time as the sericite occurring in the ore from the Cornucopia claim. Cinnabar was the last mineral to be deposited, and replaces both the carbonate and quartz. It fills fractures in the tourmaline and pyrite, and may have replaced the latter mineral to some extent.

Outcrops are not conspicuous. Many of these lodes consist of small stringers or veinlets containing abundant carbonate; and, consequently, they weather more readily than the inclosing wall rock. Then, too, the rather dense growth of vegetation on the slopes of these hills rather effecively protects the thin mantle of soil covering the outcrops. Where quartz is abundant as a gangue mineral the course of the lode is more easily followed on the surface, as float is abundant on the lower slopes and can readily be traced to its source. Very often quartz and a ferruginous carbonate are intimately intergrown and, on weathering, this combination leaves an open-textured or spongy ore consisting of quartz and limonite with tiny veinlets of cinnabar. Outcrops of this porous ore are likely to be covered by soil.

Cinnabar is a rather stable mineral and does not alter readily under the influence of surface agencies. The adamantine luster is usually dulled by exposure to weathering, and the mineral may be covered by a thin film of a dark substance that may be the secondary sulphide, metacinnabarite. That some oxidation and reduction of the sulphide has taken place was definitely determined by the fiinding of calomel and metallic mercury. A bright yellow mineral found on the L and N group may be one of the rare oxychlorides of mercury, but the quantity of it found was too small to determine the mineral specifically.

## Sunflower Group

The original discovery of cinnabar in the district was made on the Sunflower Group by E. H. Bowman in 1911, who at that time located part of the claims. In 1913 Mr. Bowman sold his claims for $10,000 to the Sunflower Cinnabar Mining Company, which did most of the work on the ground. The property later was acquired by Judge Charles Ainsworth, of Phoenix, who sold it to the Arizona Quicksilver Corporation in 1924. The Arizona Quicksilver Corporation, which owns this group, is a subsidiary of the Great Lakes Security Company, of Toledo, Ohio. W. S. Stalker, of Toledo, is president of the corporation, and E. W. Bedford, of Phoenix, is local manager. The Arizona office is located at 326 Heard Building, Phoenix, Arizona.

The Sunflower Group consists of 17 unpatented claims on Alder Creek. The hillsides are very steep, which facilitates mining by tunnels. The surface is covered with scrub oak and manzanito, which makes progress over the surface difficult. Most of the ore on this group was found on the Packover, Go-By, and Sunnyside claims, on what is known locally as the Packover lode. Several hundred feet to the northwest is a parallel lode known as the Native or Jasper; similarly, southeast of the Packover is the Ione lode. These nearly parallel lodes or belts of mineralization trend northeastward with the strike of the schistosity. On both the Ione and Jasper lodes only location and assessment work has been done, and the main development has been confined to the Packover lode.

The ore shoot on the Go-By claim has a length of from 200 to 300 feet, and has been shown to be continuous over this distance by numerous trenches or open-cuts across the lodes at close intervals. The width of the mineralized schist is quite variable. Development work done under Mr. Bedford's direction suggests that the ore shoot pitches to the southwest, and the strike is approximately N. 45° E. The country rock is largely a dark green, chlorite schist containing some red jasper. The planes of schistosity have a nearly vertical dip. Cinnabar occurs in small veinlets up to an inch or more in width. Locally, these small veins may widen within a distance of only a few feet along the strike until the width is 10 or 12 inches. This lenticular shape is rather characteristic of these veins. Quartz, tourmaline, and carbonate are the gangue minerals, and pyrite is only sparingly present in ore from this claim. Near the southwest end of the Go-By claim the lode has been displaced by a fault which strikes N. 55° W., and dips 70° to the southwest. In an adit which cuts this fault is a zone of brecciation with the planes of schistosity in the footwall curved to the west. This suggests that the hanging wall has been displaced relatively to the northwest, but the amount of displacement could not be determined. Cinnabar was found in the crushed gouge and as a smear on the slickensided surfaces of the wall, showing that the movement was definitely later than the mineralization. These relations are shown in Fig. 14. A little cinnabar and pyrite was found in jasper near the end of this adit.

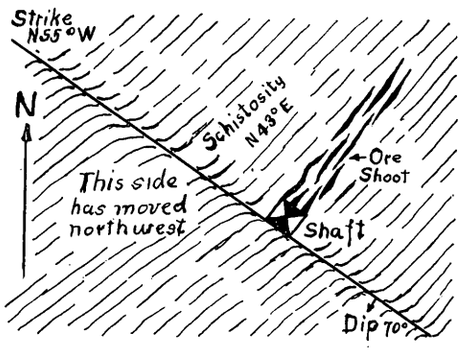


*Fig. 14.—Diagrammatic sketch showing faulted ore body, Sunflower Group.*

Southwest of the Go-By some ore has been developed on the Packover claim by two short adits and several open-cuts on the surface. The inclosing rock as well the nature and occurrence of the ore is so similar to that on the Go-By claim as to need no separate description.

In a crosscut from the lower tunnel on the Sunnyside claim the ore occurs in a banded, gray and white lens of limestone in fine-grained, quartz-sericite schist. The schist strikes N. 45° E. and dips 70° to the northwest. The ore is localized at the intersection of several fractures with the lens of limestone. Quartz is apparently absent and the cinnabar replaces calcite. The ore body is rather small in size, and does not extend more than 20 feet above the level.

A little azurite and malachite together with quartz and limonite were found on the Silver Tip claim, but cinnabar, apparently, is absent. In a surface cut near the north end of the Sunnyside claim a little azurite is associated with cinnabar.

April, 1941

Circular No. 9

# ARIZONA BUREAU OF MINES — UNIVERSITY OF ARIZONA

## QUICKSILVER (MERCURY)

*Compiled by* ELDRED D. WILSON*

### Definition

Quicksilver or mercury is a tin-white, shiny opaque metal, with specific gravity of 13.5 or a weight of 846 pounds per cubic foot. Although liquid at ordinary temperatures, quicksilver solidifies when cooled to 38 degrees (Fahrenheit) below zero. It vaporizes when heated, finally boiling at 675 degrees.

### Uses

Because of its peculiar chemical and physical properties, quicksilver and its compounds have found at least a thousand distinct uses; during peace or war, it is practically indispensable.

In their order of magnitude, the principal uses are as follows: Drugs and chemicals; explosives; iudustrial and control instruments; electrical apparatus; paint; felt hats; laboratories; gold recovery; boiler cleansers; fireworks; wood preservatives; oil refining; photographic films; mercury boilers; and printing.

As stated by Roush[1], one of the most promising prospective uses for quicksilver is in the mercury boiler, which has been under development for several years; it is the most economical method known for the generation of power from fuel, but thus far has been confined to a few large installations. Because of several complications, however, mercury boiler plants have not been altogether satisfactory in practice, and their adoption is being retarded by the improvements that have been made in the steam cycle[2].

### Marketing

Mercury is sold either through a broker or directly to the consumer. Its principal markets are in New York and San Francisco, and the consumers who may buy it are located in many different places, as shown on the list at the end of this circular.

The market unit is the flask, whose capacity in the United States is fixed, currently, at 76 pounds, net.

The sales price per flask is generally based upon New York quotations. During the World War, its annual average ranged from $48 in 1914 to $125 in 1916, with some quotations as high as $300. During various periods since then, the annual average price has ranged as follows: 1919-21, $45-$92; 1922-26, $59-$92; 1927-30, $115-$123; 1931-33, $58-$87; 1934-38, $72-$90; 1939, $104. In the March 30, 1941, issue of the Mining Journal (Phoenix, Ariz.) it is quoted at $180. These quotations, however, are for lots of 100 or more flasks; for smaller lots the price is several per cent lower.

Since 1922, the tariff on mercury has been 25 cents per pound.

### Treatment of Ores[3]

Concentrating methods for beneficiating low-grade quicksilver ores have not been developed to much extent and are rarely practiced, because direct furnace treatment has been found to be more economical.

Quicksilver is readily recovered from its ores in marketable form, as it can be volatilized in practice at a comparatively low temperature (about 1300° F.) and thus separated as a vapor from nearly all other substances that might be present in the ore.

In general two main types of plants—furnaces and retorts—are used to recover the metaal from the ore.

Retorts were used extensively prior to 1875, but they are now employed only at small mines or for the treatment of by-products at furnace plants. In retorts the ore is heated out of contact with the furnace gases, and only those vapors that are driven from the charge pass into the condensers, which generally consist of water-cooled iron pipes.

The Scott furnace, introduced in 1875, permits continuous operation and the treatment of ore crushed from 3.5 to 1.5 inches. In this furnace the ore is exposed to direct action of the gases; the volatile products of combustion, together with the quicksilver vapor, dust, and soot, are drawn into dust collectors and thence to condensers.

Mechanical furnaces of the rotary-kiln (Gould) and multiple-hearth types are coming into general use in the industry.

---

*Geologist, Arizona Bureau of Mines.
[1]Roush, G. A., Strategic Mineral Supplies, p. 278 (1939).
[2]U. S. Bur. Mines, Minerals Yearbook, 1940, p. 664.
[3]For detailed discussion, see C. N. Schuette, U. S. Bur. of Mines Bull. 335 (1931).

## Arizona Deposits[4]

*Acknowledgments*

The following descriptions are mainly abstracted from the literature, particularly Arizona Bureau of Mines Bulletin No. 122, which is now out of print.

Notes on recent operations were obtained during brief visits of the author to the properties early in 1941. Acknowledgments are due the various mine operators and owners for furnishing information.

### Distribution

Quicksilver has been produced from the Mazatzal Mountains, Dome Rock Mountains, Phoenix Mountains, and Copper Basin districts. Deposits from which no production has been made occur in other parts of the State.

### History and Production

The Dome Rock Mountains deposits were known at least as early as 1878, and those in Copper Basin during the late eighties. The first discoveries in the Mazatzal Mountains were made in 1911, and in the Phoenix Mountains in 1916.

Systematic records of Arizona's quicksilver production are not available, but the following estimates in flasks have been made:

| | |
|---|---|
| Mazatzal Mountains, 1911-1940 | 3870 |
| Dome Rock Mountains, 1908-1914 | 116 to 156 |
| Copper Basin, 1880-1904 | Unknown |
| Phoenix Mountains | 6 |
| Total, approximately | 4032 |

### Mineralogy

Quicksilver occurs in Arizona as cinnabar, metacinnabar, calomel, native mercury, and probably as mercurial tetrahedrite.

*Cinnabar:* Mercuric sulphide (HgS); when pure, contains 86.2 per cent mercury. Occurs as crystals, needles, and granular to earthy masses. Color vermilion-red, inclining to brownish-red and lead-gray. Powder scarlet; the earth variety, which contains iron oxides or clay as impurities, is brownish-red when crushed. Transparent in crystals and opaque in earthy varieties. Luster brilliant in crystalline varieties. Perfect prismatic cleavage. Hardness 2 to 2.5; specific gravity 8. The principal ore of quicksilver in Arizona as elsewhere.

*Metacinnabar:* Mercuric sulphide, in composition like cinnabar, but occurs as black masses or as thin films coating cinnabar; rarely crystalline. Specific gravity 7.7. Occurs in most Arizona quicksilver deposits.

*Calomel:* Mercurous chloride (HgCl); when pure, contains 85 per cent mercury. Color white, yellowish-gray or ash-gray, brown. Transparent to sub-translucent; luster adamantine. Hardness 1 to 2; specific gravity 6.5. An oxidation product of cinnabar.

*Mercury:* Native quicksilver (Hg). Color tin-white; opaque; shiny; luster metallic. Specific gravity 13.5. Occurs as small fluid globules in cavities.

*Mercurial tetrahedrite:* Copper-antimony sulphide. Some varieties contain up to 17 per cent quicksilver. Color dark gray to iron-black; opaque. Specific gravity 5.1; hardness 3 to 4.

## Mazatzal Mountains Deposits

### Location

The principal known quicksilver deposits of the Mazatzal Mountains are in the middle segment of the range, in both Maricopa and Gila counties, 60 to 65 miles by road from Mesa and 70 to 75 miles from Globe.

### Topography and Geology[5]

The Mazatzal Mountains form a high northwestward-trending range about 50 miles long by 12 to 18 miles wide. Their surface is characteristically rough and brushy.

[4]Lausen, Carl, and Gardner, E. D., Quicksilver (Mercury) Resources of Arizona: Univ. of Ariz., Ariz. Bur. of Mines Bull. No. 122 112 pp. 15 plates, 23 figs. (1927).
Ransome, F. L., Quicksilver Deposits of the Mazatzal Range, Arizona: U. S. Geol. Survey, Bull. No. 620, pp. 111-128 (1915).
Schrader, F. C., Quicksilver Deposits of the Phoenix Mountains, Arizona: U. S. Geol. Survey, Bull. No. 690, pp. 95-109 (1918).
Bancroft, H., Reconnaissance of the Ore Deposits in Northern Yuma County, Arizona: U. S. Geol. Survey Bull. No. 451 (1911).
[5]Wilson, Eldred D., Pre-Cambrian Mazatzal Revolution in Central Arizona: Geol. Soc. America, Bull., vol. 50, pp. 1113-1164, maps (1939).

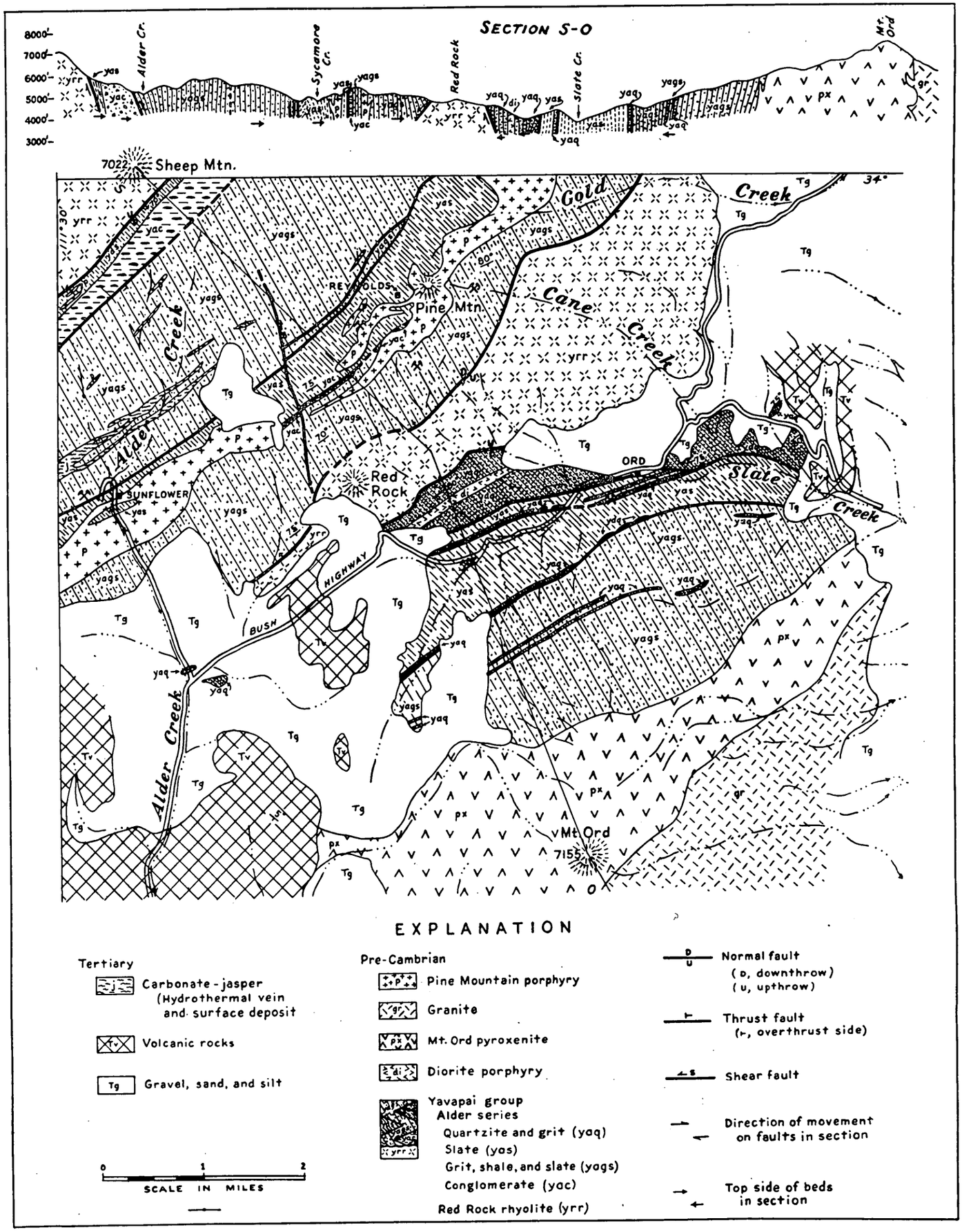


GEOLOGIC MAP OF CENTRAL PART OF MAZATZAL MOUNTAINS

Timber is plentiful in the high portions of the range. Water is obtainable from springs, temporary streams, and shallow wells.

The range consists of pre-Cambrian rocks, overlain in places by Paleozoic strata, Tertiary volcanic beds, and Tertiary gravels. Its central segment, which contains the quicksilver deposits, is made up of pre-Cambrian rhyolite, shale, slate, grit, quartzite and conglomerate, locally metamorphosed to phyllite and schist. These rocks apparently occupy a faulted syncline 5½ miles wide, with the beds striking northeastward and dipping almost vertically, except where deformed by local minor folds. This structure is terminated on the southeast by the Mt. Ord pyroxenite intrusive, which in turn is intruded by the pre-Cambrian granite that forms most of the southern segment of the range. On the northwest the syncline is limited by fault contact with the pre-Cambrian rhyolite of Sheep or Pele Mountain. Within the syncline the rocks have been intruded, essentially parallel to the bedding, by a few dikes of diorite porphyry and by the belt of rhyolite porphyry that forms Pine Mountain. The structure is further complicated by bedding faults of indeterminate magnitude; steeply dipping normal and reverse faults of northeast trend and great magnitude; and northwestward-trending faults of relatively small horizontal displacement.

## Mineral Deposits

The quicksilver deposits occur within 4 northeastward-trending mineralized zones which may be designated as the Alder-Sycamore, Pine Mountain, Mercuria, and Slate Creek belts.

The lodes occupy fracture zones which in some cases are traceable for lengths of thousands of feet. As a rule the vein outcrops are not conspicuous. In general the ore shoots are lenticular bodies with quicksilver mineralization in the form of veinlets, thin films on fracture planes, or disseminations. The veinlets vary in width from a fraction of an inch to 2 inches, and exceptonally to 6 or more inches. Much of the mineralized rock must be sorted to make furnace-grade ore.

As a rule, the ore shoots do not have clear-cut walls. They range in width from less than a foot to 3 or more feet, and exceptionally to 25 feet.

Cinnabar is the only mineral of commercial importance in the ore. Small amounts of calomel, native mercury, and metacinnabar are locally present. Associated minerals include pyrite, tetrahedrite (?), chalcopyrite, and oxidized copper minerals.

Gangue minerals consist chiefly of quartz, lime-iron carbonates, and tourmaline, and sparse serpentine and sericite.

## Alder-Sycamore Belt

From Alder Creek northeastward the Alder-Sycamore belt includes the Sunflower, Robbins, Bowman, and L & N groups of unpatented claims, covering in all a length of some 15,000 feet, all in Maricopa County.

The prevailing rocks of this belt are shale, slate, and grit, locally metamorphosed to chloritic and sericitic schists. Several hundred feet northwest of, and parallel to, the cinnabar lodes there are irregular discontinuous veins and flat-lying masses, about ⅛ mile in maximum width, of yellowish dolomitic limestone with fragments and bands of red jasper; this material appears to be of hydrothermal origin.

*History and production:* The original discovery of cinnabar in this district was made on the Sunflower Group in 1911, by E. H. Bowman. The Sunflower Cinnabar Mining Co. purchased his claims in 1913 and did considerable work upon them. During the early twenties the Arizona Quicksilver Corp. obtained the L & N, Robbins, and Sunflower groups, built a reduction plant, and carried on extensive operations until about 1930. From 1931-1940 some mining was done in this belt by Gus Magnuson and Chris Martin; L. E. Foster; A. E. Wallace; and Earl Conway and Geo. Cline. In January, 1941, lessees, Halstead and Carpenter, were operating the mine and reduction plant on the Sunflower Group, with a crew of 18 men. At that time the Sunflower Group and part of the Robbins group were held by T. J. Long, of Globe, and Gus Magnuson, of Mesa, while the L & N, Maricopa, and Cornucopia claims were held by Chris Martin, of Mesa.

According to estimates by Chris Martin and Gus Magnuson, the total quicksilver production of the Alder-Sycamore belt amounts to about 2,500 flasks, mostly from the Sunflower Group.

*Development:* Most of the development within the Alder-Sycamore belt has been on the Packover lode of the Packover, Go-By, and Sunnyside claims, Sunflower Group, which has been explored by a 210-foot vertical shaft, several thousand feet of drifts, various adits, and open cuts.

More than 1000 feet of work from adit tunnels has been done on both the Robbins and L & N groups.

*Reduction plant:* The plant[6], built in 1926 by the Arizona Quicksilver Corporation on the Sunflower Group, consisted of an oil-fired rotary kiln of 60 tons daily capacity, together with condensers and a Cottrell precipitator. It has since been slightly remodeled. Power is furnished by a 200-HP Diesel engine.

[6]Described by C. N. Schuette, U. S. Bur. of Mines Bull. 335, pp. 101-102 (1931).

| | | | |
|---|---|---|---|
| SULPHIDE NO. 1 LODE | 1. Discovery cut and tunnel | $ 100.00 | |
| IRON BUTTE NO. 2 LODE | 1. Discovery monument no value | | |
| | 2. Cut | $ 75.00 | |
| SILVER BUTTE NO. 3 LODE | 1. Discovery cut | $ 75.00 | |
| SILVER TIP NO. 4 LODE | 1. Discovery cut and tunnel | $ 370.00 | |
| QUICKSILVER NO. 1 LODE | 1. Discovery cut and tunnel | $ 150.00 | |
| | 2. Cross cut tunnel | 2,660.00 | |
| QUICKSILVER NO. 2 LODE | 1. Discovery cut | $ 75.00 | |
| QUICKSILVER NO. 3 LODE | 1. Discovery cut | $ 100.00 | |
| QUICKSILVER NO. 4 LODE | 1. Discovery cut | $ 75.00 | |
| WABASH LODE | 1. Discovery monument no value | | |
| | 2. Cut | $ 65.00 | |
| ANACONDA LODE | 1. Discovery cut and tunnel | $ 186.00 | |
| | 2. Cut | 80.00 | |
| | 3. Tunnel | 372.00 | |
| SULPHIDE LODE | 1. Discovery cut | $ 80.00 | |
| MERCURY LODE | 1. Discovery cut | $ 75.00 | |
| | 2. Cut | 65.00 | |
| RED ROCK LODE | 1. Discovery cut | $ 75.00 | |
| | 2. Cut | 75.00 | |
| | 3. Cut | 110.00 | |
| | 4. Cut | 75.00 | |
| | | | $ 335.00 |
| BLACK ROCK LODE | 1. Discovery cut | $ 100.00 | |
| | 2. Tunnel | 1,600.00 | |
| | 3. Cut | 120.00 | |
| | 4. Cut | 740.00 | |
| | 5. Cut and shaft | 400.00 | |
| | 6. Cut | 85.00 | |
| | 7. Cut | 65.00 | |
| | | | $ 3,110.00 |
| CORNUCOPIA LODE | 1. Discovery tunnel and cross cuts | $ 5,670.00 | |
| | 2. Tunnel, raise and cross cuts | 13,370.00 | |
| | 3. Cut and shaft | 220.00 | |
| | | | $19,260.00 |
| CORNUCOPIA EXTENSION LODE | 1. Discovery cut | $ 85.00 | |
| RED ROCK EXTENSION LODE | 1. Discovery cut | $ 85.00 | |
| | 2. Tunnel and drifts | 4,060.00 | |
| | 3. Tunnel | 2,198.00 | |
| | | | $ 6,343.00 |
| BIG DIKE LODE | 1. Discovery monument no value | | |
| | 2. Cut | $ 85.00 | |
| | 3. Cut | 100.00 | |
| One thirty-first interest in a common improvement | | 1,960.00 | |
| | TOTAL | $82,573.00 | |

ORE TESTING
SAMPLING
*and*
SUPERVISION OF
ORE SHIPMENTS

Phone
VAndike 9328

# ED. EISENHAUER, Jr.

**ASSAYER -- METALLURGIST -- CHEMIST**

320-322 SOUTH SAN PEDRO STREET

LOS ANGELES 13, CALIF.

June 27, 1949

Major Allured
Los Angeles
Calif.

Subject :Assay of Rock.
Marked :

| | Mercury | Gold | Silver |
|---|---|---|---|
| #1 – Go-By – 22′ face East of Hoist House | .17% | | |
| #2 – Go-By – 6′ cut East of Hoist House | .22% | | |
| #3 – Summit E. of shaft – 4′ cut – No work | 1.25% | | |
| #4 – Go-By – 300′ E. of shaft – 3′ cut surface – No work | .80% | | |
| #5 – Titanic – 400′ W. of shaft – 4′ cut – surface – in drift | .60% | | |
| #6 – Packover – 500′ W. of shaft 5′ cut – surface | 1.23% | | |
| #7 – Packover – 4′ cut – surface – Sunflower | .16% | nil | trace |
| #8 – Black Rock – 3½′ cut – surface | .40% | trace | .10 oz. |
| #9 – Cornucopia – 3′ cut of 20′ vein – 300′ in drift | .30% | | |
| #10 – Cornucopia – Bottom of Pipe sample – cut 3′ | .58% | trace | .08 oz. |
| #11 – Sunnyside – Main Outcrop – 4′ wide – Sunflower | 1.67% | | |
| #12 – Sunnyside – Main Outcrop – 4′ – 200′ from #11 | .27% | | |
| #13 – Mercury – Surface – About 2′ cut | 4.22% | | |
| #14 – Cornucopia – Bottom of Pipe | Manganese | | 13.28% |
| #15 – Higrade – Sunnyside – 6″ | 5.96% | | |
| #16 – Higrade – Titanic – 4″ | 3.16% | | |

Respectfully submitted
Ed. Eisenhauer, Jr.
Assayer

Original Assay Report on File

## ARIZONA QUICKSILVER MINE

### Mill Report — May, 1931

Mined 2,098 tons of ore, .19% at head. or 3.8 lbs. of mercury to ton.
Sorted Out 268 tons at Crusher Feeder
1,830 tons milled—extraction 89.18%

Metal Recovery 5,780.7 lbs. or 76 flasks @ $100.00 . . . . . $7,600.00

OPERATING EXPENSE:

| | | |
|---|---|---|
| *Labor, 22 men | $3,124.50 | |
| **Supervision, etc. | 1,150.00 | |
| Kiln (8 gals. per ton) 14,640 gals. @ 10c | 1,464.00 | |
| Power Plant (192 gals. day) 5,760 gals. @ 10c | 576.00 | |
| Powder | 100.00 | |
| Caps and Fuse | 30.00 | |
| Truck Maintenance | 200.00 | |
| Insurance | 25.00 | |
| Miscellaneous | 300.00 | |
| | $6,769.50 | |
| (Cost per ton for Mining and Milling $3.2214) (Cost per flask $89.07) | | 6,769.50 |
| Gross Profit (before plant depreciation, depletion, taxes and interest taken.) | | $ 830.50 |

| | | |
|---|---|---|
| *2 Men in Power Plant $6.15 and $4.50 | $ 10.65 | |
| 2 Men in Hoist House @ $5.25 | 10.50 | |
| 3 Men in Mill, 1 @ $5.00, 2 @ $4.00 | 13.00 | |
| 3 helpers @ $3.00 | 9.00 | |
| 1 Crusher Man | 5.00 | |
| 4 Miners @ $5.00 | 20.00 | |
| 3 Miners @ $4.50 | 13.50 | |
| 2 Trammers @ $5.00 | 10.00 | |
| 1 Blacksmith | 5.00 | |
| 1 Trucker | 7.50 | |
| | $ 104.15 | |
| For 30 days | | $3,124.50 |

| | | |
|---|---|---|
| **Mill Superintendent | $400.00 | |
| Mine Superintendent | 400.00 | |
| Bookeeper | 200.00 | |
| Cook | 150.00 | |
| | | $1,150.00 |

Daily Tonnage Treated, 61 ton.

## NATIONAL MINING AND MILLING COMPANY
## SUNFLOWER DISTRICT

Dates are from October 2, 1912, to July 2, 1941.

Sec. 11, 12, 13, 14, R7N T8 and 9E. Field notes completed Nov. 1, 1945

VALUE OF WORK ON 31 CLAIMS

| | | | |
|---|---|---|---|
| PACKOVER LODE | 1. Cut, tunnel and winze | $ 1,000.00 | |
| | 2. Cut and tunnel | 400.00 | |
| | 3. Cross cut tunnel | 900.00 | |
| | 4. Cut | 540.00 | |
| | | | $ 2,840.00 |
| GO-BY LODE | 1. Discovery cut | $ 300.00 | |
| | 2. Cut | 60.00 | |
| | 3. Cut | 50.00 | |
| | 4. Tunnel and drifts | 5,880.00 | |
| | | | $ 6,290.00 |
| IONE LODE | 1. Discovery cut | $ 70.00 | |
| | 2. Cut and tunnel | 175.00 | |
| | 3. Tunnel – timber | 6,000.00 | |
| | 4. Tunnel – timber | 7,350.00 | |
| | 5. Tunnel | 658.00 | |
| | | | $14,253.00 |
| TITANIC LODE | 1. Discovery cut | $ 65.00 | |
| | 2. Cut and tunnel | 2,000.00 | |
| | | | $ 2,065.00 |
| NATIVE LODE | 1. Discovery cut and tunnel | $ 100.00 | |
| | 2. Cut and tunnel | 125.00 | |
| LONGUS LODE | 1. No value to monument | | |
| | 2. Cut | $ 40.00 | |
| | 3. Cut | 75.00 | |
| RAINBOW LODE | 1. Discovery cut | $ 75.00 | |
| JASPER LODE | 1. Discovery cut | $ 75.00 | |
| LOLLAPALOOSA LODE | 1. Discovery cut | $ 75.00 | |
| HARD LUCK LODE | 1. Discovery cut | $ 75.00 | |
| | 2. Cut | 75.00 | |
| LOLLIPOP LODE | 1. Discovery cut | $ 75.00 | |
| BLACK JACK NO. 6 LODE | 1. Discovery cut | $ 75.00 | |
| | 2. Cut | 100.00 | |
| | 3. Cut and tunnel | 324.00 | |
| | 4. Cut and shaft | 250.00 | |
| | | | $ 749.00 |
| SUNNYSIDE NO. 5 LODE | 1. Discovery shaft | $ 350.00 | |
| | 2. Tunnel and drift | 2,625.00 | |
| | Winze | 3,000.00 | |
| | 3. Tunnel and drift | 4,770.00 | |
| | 4. Cut and tunnel | 350.00 | |
| | 5. Cross cut tunnel and drifts | 8,610.00 | |
| | | | $19,705.00 |

HILL
HILL
1ST vein
40' to vein
6'x6'
6'x6' IDEM
TIMBER IN SHAFT
240'
200' to vein
#2 vein
200' Drift in vein
40' from Shaft
on Pocket each level
1035' SHAFT
100'
35' Sump

EXTRA COPY
O. R. E
AUG 27 1964
DOCUMENTS
DATE | INITIALS | CODE

EXHIBIT C
Big Sam Mines, INc.
112 S. Country Club Dr.
Mesa, Arizona

LAW OFFICE
ALBERT H. MACKENZIE
ATTORNEY AT LAW
827 SECURITY BUILDING
PHOENIX 4, ARIZONA

# LEASE AND OPTION AGREEMENT

THIS AGREEMENT, made and entered into this 1st day of August, 1961, at Phoenix, Arizona, by and between SUNFLOWER PROPERTIES, INC., an Arizona corporation, hereinafter referred to as "Sunflower" or "Optionor" or "Lessor", and THOMAS E. BOLICH of Tempe, Maricopa County, Arizona, hereinafter referred to as "Bolich" or "Optionee" or "Lessee",

W I T N E S S E T H :

WHEREAS, Sunflower is the owner of fifty (50) unpatented lode mining claims situate in the Sunflower Mining District, Maricopa County, Arizona, more particularly set forth in Exhibit "A" attached hereto and made a part hereof; and

WHEREAS, Sunflower and Bolich are desirous of entering into an agreement whereby Bolich will receive a lease and an option to purchase said mining claims, as well as all the personal property hereinafter referred to;

NOW THEREFORE, IT IS AGREED between the parties hereto as follows:

## OPTION

1. That for and in consideration of the sum of Ten Dollars ($10.00) and other valuable considerations, Sunflower does hereby grant to Bolich Sunflower an option to purchase said 50 claims, together with all the buildings or structures, rails, pipes, timbers, etc. thereon or therein, together also with all the equipment, tools and other personal property owned by Sunflower. The total purchase price for said fifty mining claims, together with said personal property, is the sum of One Million ($1,000,000.00)

Dollars, and is to be paid to Optionor under the following terms and conditions, namely:

A. Commencing on 1 January 1, 1962, the sum of Five Hundred ($500.00) Dollars per month, payable at the Sunflower office, c/o Joe Bessolo, President, 3028 Glendale Boulevard, Los Angeles 39, California, the same, together with such amounts in excess thereof as are represented by the royalty payments described in sub-paragraph B. next below, to be applied to said total purchase price.

B. Five per cent (5%) royalty on all gross receipts from any ores or concentrates, or mercury, shipped or sole by Bolich from said property. Such 5% royalty shall in each instance first be credited and applied to the said minimum monthly $500.00 option payment. Copies of all receipts and a statement of all buyers' checks are to be furnished Optionor promptly after being received by Bolich.

C. If said 5% gross royalty paid to Sunflower shall amount to more than Twenty-four Thousand ($24,000.00) Dollars in any given year commencing from said date of 1 January 1, 1962, such excess may, at the election of Optionee, be applied to the next year's minimum required payment of Six Thousand ($6,000.00) Dollars. Especially is this carry-over privilege extended to Optionee if there should occur any substantial diminution in the purchase price of mercury; or if strikes or labor troubles interfere with

LAW OFFICE
ALBERT H. MACKENZIE
ATTORNEY AT LAW
627 SECURITY BUILDING
PHOENIX 4, ARIZONA

Optionee's mining or milling operations; or if there is a fire or if cave-ins, floods or other acts of nature or other mishap result in a suspension of operations on said property.

2. Production shall commence at the end of one year from the date of this Agreement and shall continue thereafter with due diligence and in a minerlike and workmanlike manner with at least 480 hours or sixty 8-hour shifts of labor per month being performed.

## LEASE

Sunflower does herewith grant, and Bolich does herewith accept, a lease, under the terms and conditions hereinafter set out, of all of the subject fifty (50) mining claims, together with all of the buildings, structures, pipes, rails, timbers, etc., thereon or therein, together also with all the equipment, tools and other personal property owned by Sunflower.

The terms and conditions of such lease are:

A. Commencing on 1 January 1, 1962, a minimum sum of Five Hundred ($500.00) Dollars per month, payable as set forth in the Option, above.

B. Five per cent (5%) royalty on all gross receipts from any ores, or concentrates, or mercury, shipped or sold by Bolich from said property. Such 5% royalty shall in each instance first be credited and applied to the said minimum $500.00 monthly rental payment. Such monthly rental payments shall also constitute the minimum monthly option payments referred to under the "Option" portion of this Agreement, above, and thus be applied to

LAW OFFICE
ALBERT H. MACKENZIE
ATTORNEY AT LAW
827 SECURITY BUILDING
PHOENIX 4, ARIZONA

the total purchase price. Copies of all receipts and a statement of all buyers' checks are to be furnished Lessor promptly after having been received by Bolich.

GENERAL

Bolich shall have the privilege of selling any of the equipment, tools, etc. above mentioned and may use the proceeds to purchase other equipment, tools, etc. more adaptable to use under the Lease or Option. However, such latter purchases shall automatically become the property of Sunflower to be included in the total property purchase. Bolich will in each instance of such sales-purchases deliver the original bills of sales, or receipts, to Sunflower.

On the other hand, any equipment, tools or other personal property purchased by Bolich with his own funds shall at all times remain his property, and, except for such structures so affixed to the realty as would, by their removal, cause damage to the realty, he shall be privileged to remove the same within sixty (60) days from the date this lease and option finally is terminated for any reason.

Provided always, however, that Bolich shall have ninety (90) days after the final termination of this agreement for any reason, within which either to sell or remove any mill or other equipment owned by him (or not owned by Sunflower), the weight or bulk character of which would make difficult or costly its removal from said property. The intent and purpose of this provision is to give Bolich adequate opportunity to sell such equipment in place, or dispose of his interest therein, to new lessees, sub-lessees, purchasers or other third parties if this contingency

LAW OFFICE
ALBERT H. MACKENZIE
ATTORNEY AT LAW
827 SECURITY BUILDING
PHOENIX 4, ARIZONA

of agreement termination occurs.

Sunflower warrants and covenants that it is the owner of the exclusive possessory rights, subject only to the paramount title of the United States, to the unpatented mining claims listed in Exhibit "A", and that it has the right to execute the lease and option contained herein, and that no other persons have any valid lease or option or claim upon said property, equipment and other personal property leased and optioned herein to Bolich. Sunflower further covenants and agrees to defend the same, and all the property herein referred to, against any claims, demands, legal process or law suits of any kind, and in that connection further covenants and agrees to indemnify and save harmless Bolich against the same, should they occur, including the assumption by Sunflower of any and all attorney's fees required to be borne in defense of the title or unencumbered right of title possession and use of any and all personal property referred to herein.

Bolich shall have the right to explore, develop, mine, process and sell ores or concentrates, or mercury, subject only to the royalty payments due Sunflower, as above outlined. He shall also have the right to make such new access roads to and through said property as seem advisable.

Bolich shall comply with all of the applicable mining laws and rules and regulations in force or promulgated by any agencies of the State of Arizona and shall, in particular, carry Workmen's Compensation insurance as required by the laws of Arizona. Further, Bolich shall carry adequate public liability and property damage insurance on all vehicles owned or operated by him in connection with the mining and processing operations herein contemplated.

LAW OFFICE
ALBERT H. MACKENZIE
ATTORNEY AT LAW
827 SECURITY BUILDING
PHOENIX 4, ARIZONA

Bolich shall promptly pay all debts arising in connection with the operations under consideration herein, and further shall indemnify and save harmless Sunflower against any claims, demands, liens or suits at law which may arise by reason of Bolich's operations of said property.

Bolich will post and keep posted and record "Notices of Non-Liability" on said property as required by law, during the terms of his lease thereof.

Bolich will do all annual assessment or annual labor required to hold possession of said claims, as required by law, and will, in addition, record the affidavits thereof, and furnish Sunflower with a true copy or copies of such affidavits by the 30th day of October of each year commencing with 1961.

Copies of all engineering, geological, metallurgical or drilling reports caused to be made or produced by Bolich will be furnished by him to Sunflower promptly upon their receipt by him.

Sunflower shall have the right at all reasonable times, through its duly authorized representatives, first, to inspect the entire subject mining property, and second, to inspect Bolich's books and records and make copies thereof for any purpose.

Upon default or delinquency in any payments called for herein, Bolich shall have sixty (60) days after notice in writing delivered to him by Sunflower of such default or delinquency, within which to make up and cure the same. Failing so to do, all of the subject property, both real and personal, belonging to Sunflower, and all of the contractual rights accruing to Bolich hereunder, shall automatically terminate, and no further notice need be given Bolich, who will thereupon deliver up to Sunflower

LAW OFFICE
ALBERT H. MACKENZIE
ATTORNEY AT LAW
927 SECURITY BUILDING
PHOENIX 4, ARIZONA

peaceful possession of all of the subject property, subject to the rights and times to remove his own property as are elsewhere set forth herein.

Bolich shall have the right to relinquish and surrender the lease and option herein provided, upon giving thirty (30) days' notice in writing to Sunflower. His right to remove his own equipment and personal property within 60 days, or to attempt to sell heavier equipment within 90 days, as hereinabove provided, shall, in the event of such voluntary relinquishment, commence at the end of the aforesaid thirty (30) day notice period. At the end of said 30-day period, all the rights and obligations to and from both parties hereto shall terminate except the above-described rights of removal and/or sale of Bolich's private property.

Provided, however, that no matter under what circumstances Bolich shall depart the subject property, he shall, nonetheless, be obligated to pay off any amount then due Sunflower as a past or current default or deficiency.

At the time of such departure from subject property, all monies theretofore paid by him to Sunflower, either as the said $500.00 minimum monthly payments or the said 5% royalties, or both, shall be construed and considered to have been paid to Sunflower as rent or liquidated damages and, as such, shall not be recoverable by Bolich.

However, in addition to the foregoing indemnification provisions and warranty of title and right to exclusive possession of said mining claims, Sunflower also covenants that it will give and maintain Bolich in peaceful possession of said mining claims

LAW OFFICE
ALBERT H. MACKENZIE
ATTORNEY AT LAW
827 SECURITY BUILDING
PHOENIX 4, ARIZONA

and personal property.

All notices required herein to be given by either party to the other shall be written notices, sent by registered mail, return receipt requested, to Sunflower as follows:

Sunflower Properties, Inc.,
c/o Howard Sens, Secretary,
1616 Dominion Avenue,
Pasadena, California;

or

Sunflower Properties, Inc.,
c/o Joe Bessolo, President,
3028 Glendale Boulevard,
Los Angeles 39, California

and to Bolich as follows:

Thomas E. Bolich, 1604 S. Farmer Avenue,
Tempe, Arizona,

and any change of address shall likewise be given to the other party by registered mail, return receipt requested.

Bolich shall have the privilege to assign or sell his interests and rights hereunder, either in whole or in part, but shall in any such instance, or instances, notify Sunflower in writing thereof, registered mail, etc., as applicable to all other notices.

The terms, provisions and covenants of this Lease and Option Agreement shall be binding upon and inure to the benefit of the parties hereto, their successors, personal representatives and assigns.

IN WITNESS WHEREOF, the parties hereto have hereunto set their hands and seals on the day and year first above written.

SUNFLOWER PROPERTIES, INC., an Arizona corporation

By Joe Bessolo President

By Howard Sens Secretary

Thomas E. Bolich

Thomas E. Bolich



LAW OFFICE
ALBERT H. MACKENZIE
ATTORNEY AT LAW
827 SECURITY BUILDING
PHOENIX 4, ARIZONA

STATE OF CALIFORNIA )
) ss.
COUNTY OF LOS ANGELES )

Before me, a Notary Public in and for said County and State, on this day personally appeared JOE BESSOLO, known to me to be the person whose name is subscribed to the foregoing instrument as President of the corporation described in the foregoing instrument, and as such he acknowledged to me that he executed the same for said corporation, for the purposes and consideration therein expressed.

Given under my hand and seal of office, this ____ day of Aug. 4, 1961.

Grace Ramsey
Notary Public

GRACE RAMSEY
My Commission Expires February 26, 1964

My Commission Expires My Commission Expires February 26, 1964

STATE OF CALIFORNIA )
) ss.
COUNTY OF LOS ANGELES )

Before me, a Notary Public in and for said County and State, on this day personally appeared HOWARD SENS, known to me to be the person whose name is subscribed to the foregoing instrument as Secretary of the corporation described in the foregoing instrument, and as such he acknowledged to me that he executed the same for said corporation, for the purposes and consideration therein expressed.

Given under my hand and seal of office, this 4 day of August, 1961.

Grace Ramsey
Notary Public

GRACE RAMSEY
My Commission Expires February 26, 1964

My Commission Expires My Commission Expires February 26, 1964

LAW OFFICE
ALBERT H. MACKENZIE
ATTORNEY AT LAW
827 SECURITY BUILDING
PHOENIX 4, ARIZONA

STATE OF ARIZONA )
) ss.
COUNTY OF MARICOPA )

This instrument was acknowledged before me this 18th day of July, 1961, by THOMAS E. BOLICH.

Adelaide V. Geisler
Notary Public

My Commission Expires My Commission Expires Dec. 1, 1964

LAW OFFICE
ALBERT H. MACKENZIE
ATTORNEY AT LAW
827 SECURITY BUILDING
PHOENIX 4, ARIZONA

50 unpatented mining claims of Sunflower Properties, Inc. located in the Sunflower Mining District, Maricopa County, to-wit:

| NAME OF CLAIM | BOOK | PAGE |
|---|---|---|
| Tone | 41 | 554 |
| Titanic | 41 | 546 |
| Jasper | 41 | 559 |
| Go By | 41 | 546 |
| Packover | 41 | 556 |
| Lalapalooza | 41 | 560 |
| Hard Luck | 41 | 555 |
| Lollipop | 41 | 545 |
| Native | 41 | 560 |
| Silver Tip No. 4 | 41 | 557 |
| Quicksilver No. 1 | 41 | 553 |
| Quicksilver No. 2 | 41 | 548 |
| Quicksilver No. 3 | 41 | 545 |
| Quicksilver No. 4 | 41 | 562 |
| Beulah | 41 | 404 |
| Zona | 41 | 404 |
| Sulphide | 41 | 547 |
| Iron Butte No. 2 | 41 | 543 |
| Silver Butte No. 3 | 41 | 551 |
| Longus | 41 | 555 |
| Rainbow | 41 | 559 |
| Sunnyside No. 5 | 41 | 558 |
| Black Jack No. 6 | 41 | 551 |
| Wabash | 41 | 543 |
| Anaconda | 41 | 557 |
| Toledo | 41 | 549 |
| Toledo No. 1 | 41 | 549 |
| Sulphide No. 1 | 41 | 544 |
| Mercury | 41 | 561 |
| L & N No. 9 | 27 | 283 |
| L & N No. 10 | 27 | 284 |
| Red Rock Extension | 41 | 548 |
| Big Dike | 43 | 82 |
| Big Dike Extension | 43 | 83 |
| Red Rock | 41 | 553 |
| Black Rock | 41 | 562 |
| Cornicopia | 41 | 552 |
| Ohio | 41 | 550 |
| L & N No. 3 | 27 | 277 |
| L & N No. 4 | 27 | 278 |
| L & N No. 13 | 27 | 287 |
| L & N No. 14 | 27 | 287 |
| L & N No. 15 | 27 | 288 |
| National Lode | 43 | 572 |
| National No. 1 Lode | 43 | 573 |
| National No. 2 Lode | 43 | 574 |
| National No. 3 Lode | 43 | 575 |
| National No. 4 Lode | 43 | 576 |
| Cornicopia Extension Lode | 43 | 577 |
| White Horse Lode | 43 | 578 |

Exhibit "A"

# MODIFICATION OF LEASE AND OPTION AGREEMENT

THIS AGREEMENT made and entered into in Maricopa County, Arizona, by and between SUNFLOWER PROPERTIES, INC., an Arizona corporation, referred to hereafter as SUNFLOWER, and THOMAS E. BOLICH, referred to hereafter as BOLICH.

WITNESSETH:

WHEREAS the parties hereto have heretofore entered into a Lease and Option Agreement dated the 1st day of August, 1961, which relates to fifty (50) unpatented lode mining claims situate in the Sunflower Mining District in Maricopa County, Arizona, and

WHEREAS the parties hereto have on two prior occasions modified said Lease and Option Agreement, and

WHEREAS the parties desire to make additional modifications in said Lease and Option Agreement, which said modifications will supersede all the modifications heretofore made,

NOW, THEREFORE, in consideration of the premises and the promises, covenants and conditions hereinafter set forth, it is agreed as follows:

1. Delete all of that portion of the said Lease and Option Agreement from Line #23 on Page One through Line #3 on Page Four, both lines inclusive, and insert in lieu thereof the following:

OPTION

FOR AND IN CONSIDERATION of the sum of Ten Dollars ($10.00) and other valuable considerations, SUNFLOWER does hereby grant to BOLICH an option to purchase the said fifty (50) claims, together with all the buildings or structures, rails, pipes, timbers, etc., thereon or therein, together also with all the equipment, tools and other personal property owned by SUNFLOWER, for a total purchase price of One Million Dollars ($1,000,000.00). All amounts heretofore or hereafter

LAW OFFICES
WADE & SMITH
816 VALLEY NAT'L BANK BLDG.
MESA, ARIZONA
TELEPHONE 969-3591

paid by BOLICH to SUNFLOWER as a royalty pursuant to the provisions of the said Lease and Option Agreement, as modified, shall apply against said purchase price. This option shall remain in full force and effect so long as the lease provisions of the said Lease and Option Agreement, as modified, remain in full force and effect.

LEASE

SUNFLOWER does hereby grant, and BOLICH does hereby accept a lease under the terms and conditions hereinafter set out of all the subject fifty (50) mining claims, together with all the buildings, structures, pipes, rails, timbers, etc., thereon or therein, together also with all the equipment, tools and other personal property owned by SUNFLOWER.

The terms and conditions of such lease are as follows:

(A) The lease shall commence January 1, 1962, and shall continue so long as BOLICH is not in default hereunder, or until royalties totaling One Million Dollars ($1,000,000.00) have been paid, whichever first occurs.

(B) BOLICH shall pay to SUNFLOWER a monthly rental consisting of a five per cent (5%) royalty on all gross receipts from any ores or concentrates or mercury shipped or sold by BOLICH from said property. Such five per cent (5%) royalty shall be payable each month on or before the 10th day of the month succeeding the month for which such royalty payment is made; PROVIDED, HOWEVER, that the first royalty payment shall be payable on or before the 10th day of April, 1963, which said payment shall be a five per cent (5%) royalty on all gross receipts on any ores or concentrates or mercury shipped or sold by BOLICH from said property prior to April 1, 1963. All amounts paid by BOLICH to SUNFLOWER under this paragraph shall apply against the purchase price set forth under the option provisions above.

(C) BOLICH shall continue production and/or exploration and development work on the premises with due diligence and in minerlike and workmanlike manner, with at least four hundred eighty (480) hours, or sixty (60) eight (8) hour shifts per month being performed; PROVIDED, HOWEVER, this requirement shall be waived when BOLICH'S mining or milling operations are suspended due to strike, labor trouble, fire, cavein, war, flood, or other acts of nature.

(D) Copies of all receipts and a statement of all Buyer's checks are to be furnished by BOLICH to SUNFLOWER upon request.

2. On Page Seven at Lines #23 and #24 delete "either as the

LAW OFFICES
WADE & SMITH
818 VALLEY NAT'L BANK BLDG.
MESA, ARIZONA
TELEPHONE 969-3591



BKT 4589 PAGE 531

said Five Hundred Dollars ($500.00) minimum monthly payments or the five per cent (5%) royalties, or both" and insert in lieu thereof "as the said five per cent (5%) royalties."

3. This agreement supersedes and replaces all prior modifications of the said Lease and Option Agreement.

4. Provisions of the said Lease and Option Agreement are hereby modified to conform herewith, but in all other respects are to be and continue in full force and effect.

IN WITNESS WHEREOF the parties have hereunto set their hands as of the 15th day of May, 1963.

SUNFLOWER PROPERTIES, INC.

By: Joe Bessolo
President

Attest: Catherine M. Bessolo
Secretary

Thomas E. Bolich
Thomas E. Bolich

STATE OF ARIZONA )
) ss.
County of Maricopa )

SUBSCRIBED and sworn to before me this 22nd day of May, 1963, by THOMAS E. BOLICH.

Steve J. M. [illegible]
Notary Public

My Commission Expires Oct. 16, 1964

My commission expires:

INDIVIDUAL ACKNOWLEDGMENT

State of California
County of Los Angeles } SS.

On this 15th day of May 1963, before me, J. C. ELLIOTT - Notary Public a Notary Public in and for said County, personally appeared Joe Bessolo and Catherine M. Bessolo

known to me to be the persons whose names are subscribed to the within instrument, and acknowledged that they executed the same.

WITNESS my hand and official seal.

J. C. Elliott

J. C. ELLIOTT - Notary Public
Notary Public in and for said Los Angeles County and State

My Commission Expires Oct. 2, 1964

# ASSIGNMENT

KNOW ALL MEN BY THESE PRESENTS:

That I, THOMAS E. BOLICH, for a good and valuable consideration, have assigned, sold, transferred, set over and conveyed, and do hereby assign, sell, transfer, set over and convey, unto BIG $AM MINES, INC., an Arizona corporation, all my right, title and interest under that certain document entitled Lease and Option Agreement dated the 1st day of August, 1961, as amended, which said agreement involves fifty (50) unpatented lode mining claims situated in the Sunflower Mining District in Maricopa County, Arizona.

IN WITNESS WHEREOF, I have hereunto set my hand this 25th day of July, 1964.

Thomas E. Bolich

Thomas E. Bolich

STATE OF ARIZONA )
) ss.
County of Maricopa )

SUBSCRIBED and sworn to before me, a Notary Public, this 25th day of July, 1964, by THOMAS E. BOLICH.

Geraldine Donovan

Notary Public

My commission expires:

[illegible]

LAW OFFICES
WADE & SMITH
318 VALLEY NAT'L BANK BLDG.
MESA, ARIZONA
TELEPHONE 969-3591

Supplemental to EXHIBIT D
Big Samines, Inc.
112 S. Country Club Dr.
Mesa, Arizona

3 (a) This corporation started work on this property in June of 1962. First completing approximately three miles of access roads. We also installed a Gould type 100-140 ton rotary kiln, condenser system, power plant, crushers, ore bins and various small equipment. Further access roads were built and we opened two pits for the purpose of open-pit mining as shown by the attached drawing. Approximately 3,000 tons of ore has been mined and a total of 173 flasks of mercury has been recovered. Unsafe walls and old underground workings prohibits further open pit mining. All of the underground work is explained and mapped in EXHIBIT D and all of the present workings including schetches are shown hereto.

Supplemental to EXHIBIT D
Big Sam Mines, Inc.
112 S. Country Club Dr.
Mesa, Arizona

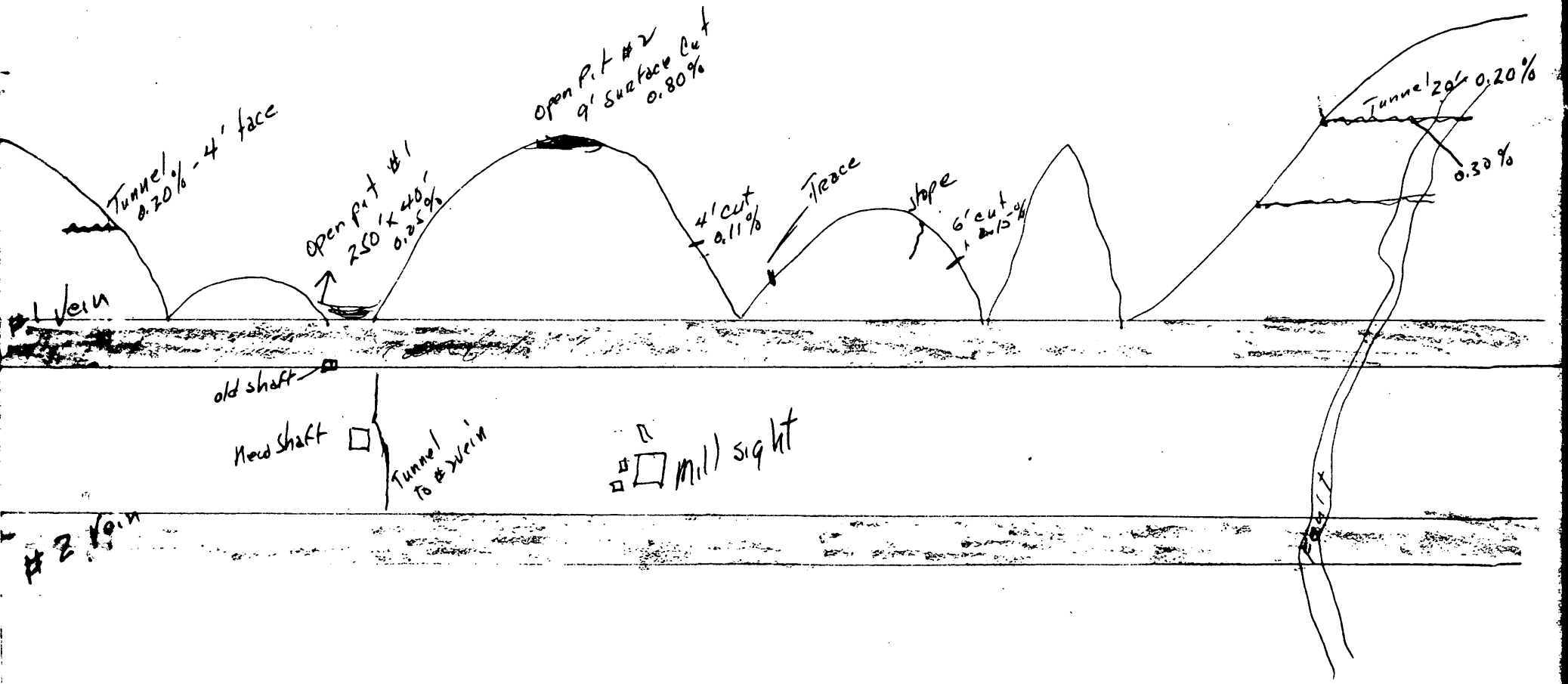

DETACH BEFORE DEPOSITING

| INVOICE | | DESCRIPTION OF PAYMENT | | AMOUNT | DISCOUNT | NET AMOUNT |
|---|---|---|---|---|---|---|
| ADVANCE | | SETTLEMENT 2 FLASKS MERCURY<br>FLASK NOS. 4715 - 4716 | | | | 330.00 |

DETACH BEFORE DEPOSITING

| INVOICE | | DESCRIPTION OF PAYMENT | | AMOUNT | DISCOUNT | NET AMOUNT |
|---|---|---|---|---|---|---|
| ADVANCE | | SETTLEMENT 3 FLASKS MERCURY<br>FLASK NOS. 4712 THRU 4714 | | | | 486.00 |

DETACH BEFORE DEPOSITING

| INVOICE | | DESCRIPTION OF PAYMENT | | AMOUNT | DISCOUNT | NET AMOUNT |
|---|---|---|---|---|---|---|
| ADVANCE | | SETTLEMENT 7 FLASKS MERCURY<br>FLASK NOS. 4726 thru 4732 | | | | 1155.00 |

DETACH BEFORE DEPOSITING

| INVOICE | | DESCRIPTION OF PAYMENT | | AMOUNT | DISCOUNT | NET AMOUNT |
|---|---|---|---|---|---|---|
| ADVANCE | | SETTLEMENT 7 FLASKS MERCURY<br>FLASK NOS. 4735 THRU 4741 | | | | 1155.00 |

CHEMICAL MANUFACTURING COMPANY, INC.
OF CALIFORNIA
714 W. OLYMPIC BLVD. • LOS ANGELES 15, CALIF.

EXHIBIT 6
Big Sam Mines, Inc.
112 S. Country Club Dr.
Mesa, Arizona

DETACH BEFORE DEPOSITING

| INVOICE | DESCRIPTION OF PAYMENT | | AMOUNT | DISCOUNT | NET AMOUNT |
|---|---|---|---|---|---|
| | ADVANCE SETTLEMENT 10 FLASKS MERCURY<br>FLASK NOS. 4688 THRU 4697 | | | | 1620.00 |

DETACH BEFORE DEPOSITING

| INVOICE | DESCRIPTION OF PAYMENT | | AMOUNT | DISCOUNT | NET AMOUNT |
|---|---|---|---|---|---|
| | ADVANCE SETTLEMENT 3 FLASKS MERCURY<br>FLASK NOS. 4703 THRU 4705 | | | | 486.00 |

DETACH BEFORE DEPOSITING

| INVOICE | DESCRIPTION OF PAYMENT | | AMOUNT | DISCOUNT | NET AMOUNT |
|---|---|---|---|---|---|
| | ADVANCE SETTLEMENT 4 FLASKS MERCURY<br>FLASK NOS. 4706 THRU 4709 | | | | 648.00 |

DETACH BEFORE DEPOSITING

| INVOICE | DESCRIPTION OF PAYMENT | | AMOUNT | DISCOUNT | NET AMOUNT |
|---|---|---|---|---|---|
| | 10-23 Purchase 2 Flasks Mercury<br>Flask Numbers 4710 & 4711 | | | | $324.00 |

DETACH BEFORE DEPOSITING

| INVOICE | DESCRIPTION OF PAYMENT | | AMOUNT | DISCOUNT | NET AMOUNT |
|---|---|---|---|---|---|
| | ADVANCE SETTLEMENT 3 FLASKS MERCURY<br>FLASK NOS. 4717, 4718, 4719 | | | | 495.00 |

DETACH BEFORE DEPOSITING

| INVOICE | DESCRIPTION OF PAYMENT | | AMOUNT | DISCOUNT | NET AMOUNT |
|---|---|---|---|---|---|
| | ADVANCE SETTLEMENT 6 FLASKS MERCURY<br>FLASK NOS. 4720 THRU 4725 | | | | 990.00 |

CHEMICAL MANUFACTURING COMPANY, INC.
OF CALIFORNIA
714 W. OLYMPIC BLVD. • LOS ANGELES 15, CALIF.

DETACH BEFORE DEPOSITING

| INVOICE | DESCRIPTION OF PAYMENT | | AMOUNT | DISCOUNT | NET AMOUNT |
|---|---|---|---|---|---|
| | ADVANCE SETTLEMENT 11 FLASKS MERCURY<br>FLASK NOS. 4829 THRU 4839 | | | | 1925.00 |

DETACH BEFORE DEPOSITING

| INVOICE | DESCRIPTION OF PAYMENT | | AMOUNT | DISCOUNT | NET AMOUNT |
|---|---|---|---|---|---|
| | ADVANCE SETTLEMENT 6 FLASKS MERCURY<br>FLASK NOS. 4840 THRU 4845 | | | | 1050.00 |

DETACH BEFORE DEPOSITING

| INVOICE | DESCRIPTION OF PAYMENT | | AMOUNT | DISCOUNT | NET AMOUNT |
|---|---|---|---|---|---|
| | ADVANCE SETTLEMENT 5 FLASKS MERCURY<br>FLASK NOS. 4856 THRU 4860 | | | | 1000.00 |

DETACH BEFORE DEPOSITING

| INVOICE | DESCRIPTION OF PAYMENT | | AMOUNT | DISCOUNT | NET AMOUNT |
|---|---|---|---|---|---|
| | ADVANCE SETTLEMENT 5 FLASKS MERCURY<br>FLASK NOS. 4650 THRU 4654 | | | | 810.00 |

DETACH BEFORE DEPOSITING

| INVOICE | DESCRIPTION OF PAYMENT | | AMOUNT | DISCOUNT | NET AMOUNT |
|---|---|---|---|---|---|
| | ADVANCE SETTLEMENT 6 FLASKS MERCURY<br>FLASK NOS. 4663 THRU 4668 | | | | 972.00 |

DETACH BEFORE DEPOSITING

| INVOICE | DESCRIPTION OF PAYMENT | | AMOUNT | DISCOUNT | NET AMOUNT |
|---|---|---|---|---|---|
| | ADVANCE SETTLEMENT 3 FLASKS MERCURY<br>FLASK NOS. 4675 THRU 4677 | | | | 486.00 |

DETACH BEFORE DEPOSITING

| INVOICE | DESCRIPTION OF PAYMENT | | AMOUNT | DISCOUNT | NET AMOUNT |
|---|---|---|---|---|---|
| | ADVANCE SETTLEMENT 6 FLASKS MERCURY<br>FLASK NOS. 4682 THRU 4687 | | | | 972.00 |

**CHEMICAL MANUFACTURING COMPANY, INC.**
OF CALIFORNIA
714 W. OLYMPIC BLVD. • LOS ANGELES 15, CALIF.

DETACH BEFORE DEPOSITING

| INVOICE | DESCRIPTION OF PAYMENT | | AMOUNT | DISCOUNT | NET AMOUNT |
|---|---|---|---|---|---|
| | ADVANCE SETTLEMENT 6 FLASKS MERCURY<br>FLASK NOS. 4630 THRU 4635 | | | | 972,00 |

DETACH BEFORE DEPOSITING

| INVOICE | DESCRIPTION OF PAYMENT | | AMOUNT | DISCOUNT | NET AMOUNT |
|---|---|---|---|---|---|
| | ADVANCE SETTLEMENT 6 FLASKS MERCURY<br>FLASK NOS. 4636 THRU 4641 | | | | $972.00 |

DETACH BEFORE DEPOSITING

| INVOICE | DESCRIPTION OF PAYMENT | | AMOUNT | DISCOUNT | NET AMOUNT |
|---|---|---|---|---|---|
| ADVANCE | SETTLEMENT 5 FLASKS MERCURY NOS. 4861--4865 | | 1000.00 | | 1408.90 |
| FINAL | " 1 FLASK " NO. 4845 | | 51.39 | | |
| FINAL | " 8 FLASKS " NOS. 4848--4855 | | 331.12 | | |
| FINAL | " 1 FLASK " NO. 4856 | | 26.39 | | |

DETACH BEFORE DEPOSITING

| INVOICE | DESCRIPTION OF PAYMENT | | AMOUNT | DISCOUNT | NET AMOUNT |
|---|---|---|---|---|---|
| | ADVANCE SETTLEMENT 3 FLASKS MERCURY<br>FLASK NOS. 4868 THRU 4870 | | | | 600.00 |

DETACH BEFORE DEPOSITING

| INVOICE | DESCRIPTION OF PAYMENT | | AMOUNT | DISCOUNT | NET AMOUNT |
|---|---|---|---|---|---|
| | ADVANCE SETTLEMENT 7 FLASKS MERCURY<br>FLASK NOS. 4822 THRU 4828 | | | | 1225.00 |

DETACH BEFORE DEPOSITING

| INVOICE | DESCRIPTION OF PAYMENT | | AMOUNT | DISCOUNT | NET AMOUNT |
|---|---|---|---|---|---|
| | ADVANCE SETTLEMENT 5 FLASKS MERCURY<br>FLASK NOS. 4742 THRU 4746 | | | | 825.00 |

CHEMICAL MANUFACTURING COMPANY, INC.
OF CALIFORNIA
714 W. OLYMPIC BLVD. • LOS ANGELES 15, CALIF.

DETACH BEFORE DEPOSITING

| INVOICE | DESCRIPTION OF PAYMENT | | AMOUNT | DISCOUNT | NET AMOUNT |
|---|---|---|---|---|---|
| | ADVANCE SETTLEMENT 15 FLASKS MERCURY<br>FLASK NOS. 4580 THRU 4594 | | | | 2475.00 |

DETACH BEFORE DEPOSITING

| INVOICE | DESCRIPTION OF PAYMENT | | AMOUNT | DISCOUNT | NET AMOUNT |
|---|---|---|---|---|---|
| | ADVANCE SETTLEMENT 11 FLASKS MERCURY<br>FLASK NOS. 4595 THRU 4605 | | | | 1815.00 |

DETACH BEFORE DEPOSITING

| INVOICE | DESCRIPTION OF PAYMENT | | AMOUNT | DISCOUNT | NET AMOUNT |
|---|---|---|---|---|---|
| | ADVANCE SETTLEMENT 5 FLASKS MERCURY<br>FLASK NOS. 4606 THRU 4610 @ $165.00 EA. | | | | 825.00 |

DETACH BEFORE DEPOSITING

| INVOICE | DESCRIPTION OF PAYMENT | | AMOUNT | DISCOUNT | NET AMOUNT |
|---|---|---|---|---|---|
| | ADVANCE SETTLEMENT 10 FLASKS MERCURY<br>FLASK NOS. 4611 THRU 4620 | | | | 1650.00 |

DETACH BEFORE DEPOSITING

| INVOICE | DESCRIPTION OF PAYMENT | | AMOUNT | DISCOUNT | NET AMOUNT |
|---|---|---|---|---|---|
| | ADVANCE SETTLEMENT 3 FLASKS MERCURY<br>FLASK NOS. 4621 THRU 4623 | | | | 495.00 |

DETACH BEFORE DEPOSITING

| INVOICE | DESCRIPTION OF PAYMENT | | AMOUNT | DISCOUNT | NET AMOUNT |
|---|---|---|---|---|---|
| | ADVANCE SETTLEMENT 6 FLASKS MERCURY<br>FLASK NOS. 4624 THRU 4629 | | | | 792.00 |

CHEMICAL MANUFACTURING COMPANY, INC.
OF CALIFORNIA
714 W. OLYMPIC BLVD. • LOS ANGELES 15, CALIF.

DETACH BEFORE DEPOSITING

| INVOICE | | DESCRIPTION OF PAYMENT | | AMOUNT | DISCOUNT | NET AMOUNT |
|---|---|---|---|---|---|---|
| ADVANCE | | SETTLEMENT 3 FLASKS MERCURY<br>FLASK NOS. 4871 THRU 4873 | | | | 600.00 |

DETACH BEFORE DEPOSITING

| INVOICE | | DESCRIPTION OF PAYMENT | | AMOUNT | DISCOUNT | NET AMOUNT |
|---|---|---|---|---|---|---|
| ADVANCE | | SETTLEMENT 2 FLASKS MERCURY<br>FLASK NOS. 4883 - 4884 | | | | 450.00 |

DETACH BEFORE DEPOSITING

| INVOICE | | DESCRIPTION OF PAYMENT | | AMOUNT | DISCOUNT | NET AMOUNT |
|---|---|---|---|---|---|---|
| ADVANCE | | SETTLEMENT 3 FLASKS MERCURY<br>FLASK NOS. 4994 THRU 4996 | | | | 675.00 |

DETACH BEFORE DEPOSITING

| INVOICE | | DESCRIPTION OF PAYMENT | | AMOUNT | DISCOUNT | NET AMOUNT |
|---|---|---|---|---|---|---|
| ADVANCE | | SETTLEMENT 3 FLASKS MERCURY<br>FLASK NOS. 4874 THRU 4876 | | | | 600.00 |

DETACH BEFORE DEPOSITING

| INVOICE | | DESCRIPTION OF PAYMENT | | AMOUNT | DISCOUNT | NET AMOUNT |
|---|---|---|---|---|---|---|
| ADVANCE | | SETTLEMENT 3 FLASKS MERCURY<br>FLASK NOS. 4877 thru 4879 | | | | 600.00 |

DETACH BEFORE DEPOSITING

| INVOICE | | DESCRIPTION OF PAYMENT | | AMOUNT | DISCOUNT | NET AMOUNT |
|---|---|---|---|---|---|---|
| ADVANCE | | SETTLEMENT ONE FLASK MERCURY<br>FLASK NO. 4104 | | | | 165.00 |

CHEMICAL MANUFACTURING COMPANY, INC.
OF CALIFORNIA
714 W. OLYMPIC BLVD. • LOS ANGELES 15, CALIF.

EXTRA COPY
O. M. E
RECEIVED AUG 27 1964

| DATE | INITIALS | CODE |
| --- | --- | --- |
| | | |
| | | |
| | | |
| | | |
| | | |

5. EXPLORATION WORK:

(a) Two (2) compartment shaft 1035 feet deep. Each compartment 6' X 6' inside. One (1) compartment to be partitioned into a 2' X 6' air fan hole and a 3' X 6' X 6' travel way with ladder and plank platform each 20' plus all pipes as required by Arizona Mining Laws.

5400 feet of tunnels and drifts size 7' X 7'. Ten (10) cross cut tunnels will be driven; one (1) each 100 feet in shaft to vein or to big fault then drift 200 feet each side of cross tunnel in fault. Five (5) cross tunnels 200 feet to vein #2. The shaft will be sunk 40 feet south of the old shaft which is closed. The shaft will be 60 feet west of center on the western end survey pipe on Go By Claim. See Exhibit D.

(c) Daily rate of progress:

Shaft - 5 feet daily in 3 shifts - 5 days weekly -will be finished in 46 weeks.

Tunnels - 15 feet daily in 3 shifts as soon as the shaft has passed the 200 foot level. Two tunnels will be worked making a total of 30 feet daily. Work on tunnels will be finished within one year.

Ore -
Shutes - One (1) ore shute will be built in 4 days using 3 shifts daily.

(1) Estimated cost of driving tunnels 5400 feet -

| | | |
|---|---|---|
| 54,000 | lb. Dynamite @ $37.00 cwt | $ 19,980.00 |
| 17,280 | ea. Electric Exploders @ 20¢ | 3,456.00 |
| 10,800 | ft. rail @ 60¢ per ft. | 6,480. 00 |
| 5,400 | ft. 3" air pipe @ $1.20 per ft. | 6,480.00 |
| 5,400 | ft. 1" water pipe @ 30¢ per ft. | 1,620.00 |
| 2,500 | lb. rail spikes @ 15¢ per lb. | 375.00 |
| 1,080 | Fishplates @ 20¢ each | 260.00 |
| 4,320 | Fishplate Bolts @ 10¢ each | 432.00 |
| 343,400 | bd. ft. lumber @ $140 per M | 48,076.00 |
| 500 | Carbon bits @ $16.00 each | 8,000.00 |
| 800 | ft. Drill Steel | 1,600.00 |
| 50 | Shovels @ $5.50 each | 275.00 |
| 50 | Picks @ $5.50 each | 275.00 |
| 3,840 | days Labor @ $23.00 | 88,320.00 |
| | Compensation Insurance, etc. | 13,248.00 |
| | Total | $ 198,877.00 |

$36.82 per foot.

BIG SAM MINES, INC.
112 S. Country Club Drive
Mesa, Arizona

(2) Estimated Cost of Shaft to a 1035 foot depth -

| | | |
|---|---|---|
| 4140 | Labor days @ $23.00 per 8 hr. day | $ 95,220.00 |
| | Compensation, etc. | 15,276.60 |
| 62100 | gallon fuel oil @ 18¢ | 11,078.00 |
| 9 | barrels oil @ $50.00 bl. | 450.00 |
| 2 | barrels grease @ $85.50 each | 171.00 |
| 200 | carbon bits @ $16.00 each | 3,200.00 |
| 265 | ft. drill steel | 530.00 |
| 20700 | lb. dynamite @ $37.00 per cwt. | 7,659.00 |
| 6624 | Electric exploders @ 20¢ each | 1,324.80 |
| 6000 | lb. 40d spikes @ 10¢ lb. | 600.00 |
| 828 | 14 in. lagg screws @ 35¢ each | 289.80 |
| 828 | ½" X 5' hanging bolts @ 50¢ each | 414.00 |
| 100 | loc washers | 18.00 |
| 2040 | ft. 3" air and water pipe @ $1.20 per ft. | 2,484.00 |
| 1035 | 1" water pipe @ 30¢ per ft. | 310.50 |
| 207 | days dump truck rental @ $15.00 per day | 3,105.00 |
| 1035 | ft high tension insulated wire 6Mv @1.20 per ft. | 1,142.00 |
| | Telephone & Bell System | 1,035.00 |
| 250700 | bd ft. lumber @ $140 per M | 35,098.00 |
| | Total | $ 179,405.70 |

(3) Estimated Cost of Ten (10) Ore Chutes in Shaft - capacity 33 yrds.-

| | | |
|---|---|---|
| 150 | lb. Dynamite | 55.50 |
| 60 | Electric Exploders | 12.00 |
| 3000 | Bd ft. lumber @ $140.00 per M | 420.00 |
| 4000 | lb. Iron @ 10¢ per lb. | 400.00 |
| 30 | days labor @ $23.00 per 8 hr. day | 690.00 |
| 8 | hrs. Welding @ $5.00 per day | 40.00 |
| | Compensation Insurance, etc. | 109.50 |
| 1 | Air operated Gate | 450.00 |
| | Total | $ 2,177.00 |

(4) Excavation for Shaft and Housing for Equipment -

| | | |
|---|---|---|
| Excavation for Shaft - 10 days, front end loader @ $80 per day | $ | 800.00 |
| 20 days labor @ $23.00 per day | | 460.00 |
| Excavation for engine house & generator house loader 10 @ $80 | | 800.00 |
| 20 days labor @ $23.00 per day | | 460.00 |
| 40 days labor @ $23.00 bldg. forms and complete bldg. | | 920.00 |
| Compensation Insurance, etc. | | 276.00 |
| 150 yards Cement @ $18.00 per yd. | | 2,700.00 |
| 10,000 ft. Siding & Roofing Material | | 1,200.00 |
| 7,000 bd. ft. lumber @ $140 per M | | 980.00 |
| 8 Windows | | 80.00 |
| 4 Doors & Frames | | 60.00 |
| 300 lb. nails @ $15.00 per cwt. | | 45.00 |
| Total | $ | 8,781.00 |

(5) Supervision, etc.

| | | |
|---|---|---|
| Superintendent | | 6,624.00 |
| Accounting | | 2,000.00 |
| Consultant | | 2,500.00 |
| Total | $ | 11,124.00 |

(6) Total Cost of Project -

| | | | |
|---|---|---|---|
| 1. | Estimated cost of driving tunnels | $ | 198,877.00 |
| 2. | Estimated cost of shaft | | 179,405.70 |
| 3. | Estimated cost of ten ore chutes in shaft | | 2,177.00 |
| 4. | Excavation for shaft and housing | | 8,781.00 |
| 5. | Supervision, etc. | | 11,124.00 |
| 6. | Independent Contractors, bid attached | | 92,250.00 |
| | Total | $ | 492,614.70 |

# COX
## MACHINERY & EQUIPMENT SALES

Contracting Machinery
Used Tractor Parts
Used Shovel Parts

3301 WEST BROADWAY
PHOENIX, ARIZONA

MAILING ADDRESS
314 WEST TOWNLEY AVENUE
PHOENIX, ARIOZNA

Road and Heavy Equipment
Used Truck Parts

PHONES 27-68611
BUSINESS: ~~BROADWAY 6-4551~~
RESIDENCE: WINDSOR 3-6247

Bid for head frame to sink shaft and allied equipment:

| | | |
|---|---|---|
| 2500 | ft 1" cable @ $1.10 per ft. | $ 2,750.00 |
| 1 | Double Hoist & 2 - 150 H.P. Elect. Mtrs. | 10,000.00 |
| 1 | Headframe & 2 shiv wheels erected | 11,500.00 |
| 1 | Ore bin for head frame capacity 50 T. | 2,700.00 |
| 1 | 600 cfpm compressor | 10,000.00 |
| 1 | Slusher & Cable incl. 50 H.P. Mtr. & Drum | 4,500.00 |
| 2 | Shaft Cages | 2,600.00 |
| 1 | 3" deep well pump | 2,800.00 |
| 1 | Air Clam ½ yd. | 3,490.00 |
| 1 | Electric Clam Hoist w/50 h.p. Mtr. | 2,510.00 |
| 1 | Cable Loading Shute | 800.00 |
| 1 | Safety Door | 600.00 |
| 1 | Air Fan & 75 h.p. Mtr. | 5,500.00 |
| | Electric panel control & wiring | 6,000.00 |
| 1 | Shaft Drill steel & hose | 1,500.00 |
| 2 | 400 KW Generators & Transformers | 21,000.00 |
| 1 | Air mucking machine | 4,000.00 |
| | Total | $ 92,250.00 |

The above total includes labor and material for complete installation.

List of and fair market value of equipment to be furnished by Big Sam Mines, Inc.

| | |
|---|---|
| 1957 International Dump Truck | $ 1,800.00 |
| 1954 Morman Harrington 4x4 Drive | 2,000.00 |
| 1953 Gardner-Denver Compressor #105 | 1,650.00 |
| Gardner-Denver Jack Hammer &m | |
| Air leg | 600.00 |
| Hose, bits and small tools & | |
| steel. | 300.00 |
| Lincoln Welder | 350.00 |
| 100 KW GM 1960 Generator | 7,500.00 |
| TD9 International Drot Loader | 7,000.00 |
| 1964 GMC Pickup | 2,300.00 |
| 1948 Willys jeep | 400.00 |
| | $23,900.00 |

above units are all in good condition.

HILL
HILL
6X6
6X6
IDEN
TIMBER
IN SHAFT
1ST vein
40' to vein
240'
200' to vein
#2 vein
200 Drift
40'
from Shaft
200 Drift in vein
on Pocket
each level
1035' SHAFT
100'
35'
Sump

EXTRA COPY
O. R. R
RECEIVED AUG 27 1964
DATE | INITIALS | CODE