DMA Form 1

DEFENSE MINERALS ADMINISTRATION
Control Slip

CONTROLLED DOCUMENT

DMA Docket No. 1139

DO NOT DETACH THIS SLIP

Action on this document is recorded and controlled in Reports and Records Branch. Any movement of this document between divisions or offices of DMA or movement outside DMA must be reported to the Reports and Records Branch. Actions taken that affect status of the case must also be reported.

This document has been recorded as

EXPLORATION LOAN

Any action taken to change the type of request for assistance must be promptly reported to the Reports and Records Branch. Use DMA Form 2 for submitting these reports.

Routing Slip

To: SUPPLY DIVISION Date 9-7-51

To: Reports and Records Date SEP 10 1951

To: _____ Date _____

To: _____ Date _____

To: _____ Date _____

To: _____ Date _____

To: _____ Date _____

To: _____ Date _____

To: _____ Date _____

To: _____ Date _____

To: _____ Date _____

To: _____ Date _____

To: _____ Date _____

To: _____ Date _____

To: _____ Date _____

DO NOT DETACH

CONTROLLED DOCUMENT

DMA Form 2

DEFENSE MINERALS ADMINISTRATION
Status Change Notice

DMA Docket No. 11391 Jewell S Wisdom

To: Reports and Records Branch

From: LEAD AND ZINC BRANCH

Date: JUL 6 1951

The following action has been taken this date on the above Controlled Document.

Forwarded to

Type of request changed to:

Denied ☐ Withdrawn ☐

Approved in amount of $

Other action, specify:

On hand- to be denied

UNITED STATES
DEPARTMENT OF THE INTERIOR
DEFENSE MINERALS ADMINISTRATION
WASHINGTON 25, D. C.

SEP 10 1951

Re: DMA-1139
Jerrell S. Wisdon
Grandview Mine
Inyo County, California
Exploration loan, $8,220.00
Lead, zinc

Memorandum

To: Reports and Records Unit
Administrative Management Div.

From: Chief, Lead-Zinc Branch

Subject: Denial of loan

The Defense Minerals Administration Field Team, Region III has examined this mine and recommends that the proposed exploration by a 200 foot crosscut be denied. The reasons the proposed crosscut does not seem feasible (as given in the field team report) are:

1. A recent shipment from the probable ore body in the main workings was unprofitable and there is no reason to believe that an increase in the tenor of the ore would occur with depth.

2. There is a good chance of a crosscut missing the downward extension of the replacement body of the main workings on account of the irregular shapes characteristic of replacement bodies and the probable faulting of the down-dip portions of the replacement body under discussion.

It is the recommendation of the Lead-Zinc Branch that the application be denied and that the attached letter be sent to the applicant.

Returned herewith are:

1 copy of the field team report and map
2 copies of Form MF-103 and two attached statements.
1 copy of Form MF-200
1 copy of Form MF-201
1 Envelope containing three assay reports, 1 lease, 1 deed to mining claim, 1 quitclaim deed.

T. P. Billings, Chief
Lead-Zinc Branch

Approved:
Tom Lyon
Director, Supply Division

FILE COPY
SURNAME:

350

Gildersleeve (ETM)
McKnight
Bishop
Bishop

UNITED STATES
DEPARTMENT OF THE INTERIOR
DEFENSE MINERALS ADMINISTRATION
WASHINGTON 25, D. C.

SEP 10 1951
Re: DMA-1139

Mr. Jerrell S. Wisdom
14631 Sherman Way
Van Nuys, California

Dear Mr. Wisdom:

The Defense Minerals Administration has reviewed your application (DMA-1139) for exploration assistance at the Grandview mine.

Under the Defense Minerals Administration's program, Government aid is available only for projects which offer possibilities of increasing the development of strategic and critical minerals. From a review of your application and evaluation of your property, we do not believe that the chances are promising enough for a significant discovery of lead and zinc ores to warrant an expenditure of public funds for the project that you propose. I regret, therefore, that your application must be denied.

We wish to thank you for bringing this property to our attention.

Very truly yours,

BJ
9/18

Tom Lyon

Tom Lyon, Director
Supply Division

BGildersleeve:emp
G 9-6-51
Copies to: H. C. Miller Region III (2)
Chief, Lead-Zinc Br.
E. T. McKnight 4204 GSA
R. H. Mote
Directors r. file 4214 GSA
Br. r. file 4214 GSA
Administrators r. file
DMA docket file

FILE COPY
SURNAME: 351
350

Gildersleeve (ETHE)
McKnight
TPBillings
Brashfo

UNITED STATES
DEPARTMENT OF THE INTERIOR
DEFENSE MINERALS ADMINISTRATION
WASHINGTON 25, D. C.

SEP 1 0 1951

Re: DMA-1139
Jerrell S. Wisdom
Grandview Mine
Inyo County, California
Exploration loan, $8,220.00
Lead, zinc

Memorandum

To: Reports and Records Unit
Administrative Management Div.

From: Chief, Lead-Zinc Branch

Subject: Denial of loan

The Defense Minerals Administration Field Team, Region III has examined this mine and recommends that the proposed exploration by a 200 foot crosscut be denied. The reasons the proposed crosscut does not seem feasible (as given in the field team report) are:

1. A recent shipment from the probable ore body in the main workings was unprofitable and there is no reason to believe that an increase in the tenor of the ore would occur with depth.

2. There is a good chance of a crosscut missing the downward extension of the replacement body of the main workings on account of the irregular shapes characteristic of replacement bodies and the probable faulting of the down-dip portions of the replacement body under discussion.

It is the recommendation of the Lead-Zinc Branch that the application be denied and that the attached letter be sent to the applicant.

Returned herewith are:

1 copy of the field team report and map
2 copies of Form MF-103 and two attached statements.
1 copy of Form MF-200
1 copy of Form MF-201
1 envelope containing three assay reports, 1 lease, 1 deed to mining claim, 1 quitclaim deed.

T. P. Billings, Chief
Lead-Zinc Branch

Approved:

Tom Lyon

Director, Supply Division

BGildersleeve:emp
G 9-6-51

Copies to: H. C. Miller Region III (2)
Chief, Lead-Zinc Br.
E. T. McKnight 4204 GSA
R. H. Mote

Directors r. files 4214 GSA
Br. r. file 4214 GSA
Administrators. r. file

July 31, 1951

Mr. Jerrell S. Wisdom
14631 Sherman Way
Van Nuys, California

Subject: DMA-1890
Re: Exploration Loan -
Hornor Claims

My dear Mr. Wisdom:

Reference is made to the letter of July 20, 1951 from Landon F. Strobel acknowledging your application and attachments of July 5, for an exploration loan under the Defense Production Act of 1950.

The application was assigned Docket Number DMA-1890 and referred to Mr. Thomas Billings, Chief, Lead-Zinc Branch on July 30, 1951.

In any future correspondence relating to your application, kindly refer to DMA-1890, the new number.

Sincerely yours,

ROBERT E. ADAMS

Robert E. Adams
Chief, Reports & Records Unit

R. E. Adams:je
cc: Adams
File
Billings
Lyon

FILE COPY
SURNAME:

UNITED STATES
DEPARTMENT OF THE INTERIOR
DEFENSE MINERALS ADMINISTRATION
WASHINGTON 25, D. C.

July 20, 1951

Mr. Jerrell S. Wisdom
14631 Sherman Way
Van Nuys, California

Subject: DMA-1139X
Re: Exploration Loan -
Grandview Claims

My dear Mr. Wisdom:

Receipt is acknowledged of your application and attachments of July 5, 1951 for an exploration loan under the Defense Production Act of 1950.

The application was assigned Docket Number DMA-1139X and referred to Mr. Thomas Billings, Chief, Lead-Zinc Branch on July 17, 1951.

In any future correspondence relating to your application, kindly refer to DMA-1139X.

Sincerely yours,

Landon F. Strobel
Executive Secretary

L. F. Strobel:jc
cc: Strobel
✓File
Billings
Lyon

July 20, 1951

Mr. Jerrell S. Wisdom
14631 Sherman Way
Van Nuys, California

Subject: DMA-1139X
Re: Exploration Loan -
Grandview Claims

My dear Mr. Wisdom:

Receipt is acknowledged of your application and attachments of July 5, 1951 for an exploration loan under the Defense Production Act of 1950.

The application was assigned Docket Number DMA-1139X and referred to Mr. Thomas Billings, Chief, Lead-Zinc Branch on July 17, 1951.

In any future correspondence relating to your application, kindly refer to DMA-1139X.

Sincerely yours,

Landon F. Strobel
Executive Secretary

L. F. Strobel:jc
cc: ✓Strobel
File
Billings
Lyon

FILE COPY
SURNAME:

Herres
Brooks
Mote

UNITED STATES
DEPARTMENT OF THE INTERIOR
DEFENSE MINERALS ADMINISTRATION
WASHINGTON 25, D. C.

June 29, 1951

DMA-1139X

Mr. Jerrill S. Wisdom
14631 Sherman Way
Van Nuys, California

Dear Mr. Wisdom:

Your letter of June 24 has been called to my attention.

In accordance with your request for another application form, I am pleased to enclose the forms in question.

In case I can be of further assistance to you in this connection, kindly let me know.

Very truly yours,

Otto Herres

OTTO HERRES, Chief
Lead-Zinc Branch

Enclosure

OHERRES:ks

cc: Strobel
Mote
McKnight
Herres
Files

1139

UNITED STATES
DEPARTMENT OF THE INTERIOR
DEFENSE MINERALS ADMINISTRATION
~~WASHINGTON 25, D.C.~~

Office of
Executive Officer
DMA Field Team
Region III

1415 Appraisers Bldg.
630 Sansome Street
San Francisco 11, Calif.

June 19, 1951

Memorandum

To: Defense Minerals Administration, Washington, D. C.

From: Executive Officer, DMA Field Team, Region III

Subject: Application of Mr. Jerrell S. Wisdom, Van Nuys, California, for exploration loan
DMA-1139, Grand View Mining Co., Big Pine, Calif.

Transmitted herewith are four copies of a report entitled "DMA-1139, Grandview Mine, Inyo County, California, by Edward M. MacKevett and Lewis A. Brubaker, Geologists, Geological Survey, dated June 11, 1951".

The report indicates that there is almost no ore showing and that the proposed exploration by a 200-foot cross-cut is not recommended. Mr. MacKevett sent four samples to the Reno laboratory for assay but the results will not affect the main conclusions.

Mr. MacKevett suggests that diamond drilling would be a better way to test the ground, but there is no indication of whether the mine owners will be interested in this type of work under an exploration loan.

The inquiry from Defense Minerals Administration asked if their interpretation of the owners proposal gave correctly the owners contribution: MacKevett's answer is "yes". The two partners plan to match Government funds, in large part, by contributing their labor on the proposed cross-cut at going wages.

Docket DMA-1139 is being returned herewith.

H. C. Miller
Executive Officer, DMA Field Team
Region III

Attachments

JUN 25 1951

UNITED STATES
DEPARTMENT OF THE INTERIOR
OSCAR L. CHAPMAN, SECRETARY

DEFENSE MINERALS ADMINISTRATION

REPORT OF EXAMINATION BY FIELD TEAM
REGION III

DMA-1139, Grandview Mine, Inyo County, California

Edward M. MacKevett, Geologist
U. S. Geological Survey

Lewis A. Brubaker, Geologist
U. S. Geological Survey

June 11, 1951

Introduction

The Grandview mine consists of several claims located at elevations near 8000 feet in the Black Canyon Mining District on the west slope of the Inyo Range, about 12 miles northeast of Big Pine, California. From the junction of the Westgard Pass Road and U.S. Highway 395 (0.5 miles north of Big Pine), the Grandview mine is accessible to automobile travel by going easterly on the paved Westgard Pass Road for 13.0 miles, travelling northerly on the White Mountain Road, a good dirt road, for 5.3 miles, and then travelling westerly on a fair dirt road for 1.8 miles to the mine camp. The nearest railhead is at Zurich, 18.1 miles from the mine over the aforementioned route.

The authors spent two days examining the property, and were accompanied in the field by Jerrell S. Wisdom, the mine owner, for half of one of the days. Field work consisted of examining all of the workings on the claims, making an underground map of the most important working, sampling, and a general reconnaissance of the immediate area.

Data on the application concerning equipment, development work, and other assets of the operators appears to be essentially true. However, the spring mentioned in the application is undeveloped and lies in the bottom of a canyon about 2000 feet lower than the mine.

Geology

A thick sequence of Cambrian(?) sedimentary rocks with prevailing northerly strikes and moderate to steep westerly dips is the exposed country rock in the Grandview Mine Area. Limestone is the most abundant rock, but quartzite and phyllitic limy shale are present to lesser extents.

The only probable lead-zinc ore at the Grandview mine is exposed in the main workings (see attached map) and is largely an oxidized bedding-plane replacement from six inches to two feet thick. Small amounts of galena, anglesite(?), and hemimorphite in a highly iron-stained, predominantly carbonate gangue compose this body. The irregularly-shaped ore(?) zone is truncated on the south by an east-west trending fault, and it crops out for only 12 feet along its strike to the north. This replacement body thins in its down-dip portions, and its lowermost underground exposure is apparently cut by a northeasterly-trending fault.

Other mineralized zones at the Grandview property include several generally easterly-trending, steep-dipping, hematite-rich quartz veins from 6 to 18 inches thick, and a few highly-oxidized siliceous veins essentially parallel to the bedding.

The easterly-trending quartz veins are persistent and traceable over most of the area. Megascopically they appear to be made up largely of quartz with a fair amount of hematite, some pyrite and limonite pseudomorphs after pyrite, and very minor amounts of bluish copper stain. These veins were reported by the applicant to assay

fairly high in gold, however they seem devoid of any lead-zinc-copper production possibilities.

The siliceous veins parallel to the bedding lack lateral continuity. Sparsely distributed galena in a quartz matrix is exposed in one prospect pit, and this constitutes the only observed ore mineral in these veins. It is likely that the highly-oxidized parts of these veins contain small amounts of secondary lead and zinc minerals, but none were discernible in the field.

Conclusions

As stated in the application, the applicant intends to drive a 200 foot crosscut from a point on the hillside to intersect the probable ore of the main workings at a depth of 100 feet or so. (A previous operator reportedly (by Wisdom) struck ore at a depth of 93 feet with a diamond drill, but although the drill hole is present there are no cores or other records available to substantiate this statement.).

Driving the proposed crosscut does not seem feasible for the following reasons:

(1) a recent shipment from the probable ore body in the main workings was unprofitable and there is no reason to believe that an increase in the tenor of the ore would occur with depth.

(2) there is a good chance of a crosscut missing the downward extension of the replacement body of the

main workings on account of the irregular shapes characteristic of replacement bodies and the probable faulting of the down-dip portions of the replacement body under discussion.

The currently inactive Black Canyon mine, which borders the Grandview claims on the east shipped 900 tons of ore that averaged $60 per ton prior to 1947 1/. The geologic environment at the Black Canyon mine is similar to that at the Grandview mine and the majority of the Black Canyon mine's ore production came from a westerly-dipping replacement vein.

There is a fair possibility that diamond drilling could be successfully employed to locate and delineate ore at the Grandview mine.

1/. Norman L.A. Jr. and Stewart R.M., Mines and Mineral Resources of Inyo County: Calif. Jour. of Mines and Geology, vol. 47, no. 1, p. 58, 1951.

EXPLANATION

60
Fault, showing dip

90
Vertical fault

55
Shear zone, showing dip

35
Strike and dip of beds

28
Ore, protore, or gangue, showing dip

Shaft going above and below level

Inclined workings (Chevrons point down)

⊗ G-3
Sample locality

Abbreviations used
calc --- calcite
chalced --- chalcedony
gn --- galena
hem --- hematite
ls --- limestone
ox --- highly oxidized ore or protore
qz --- quartz

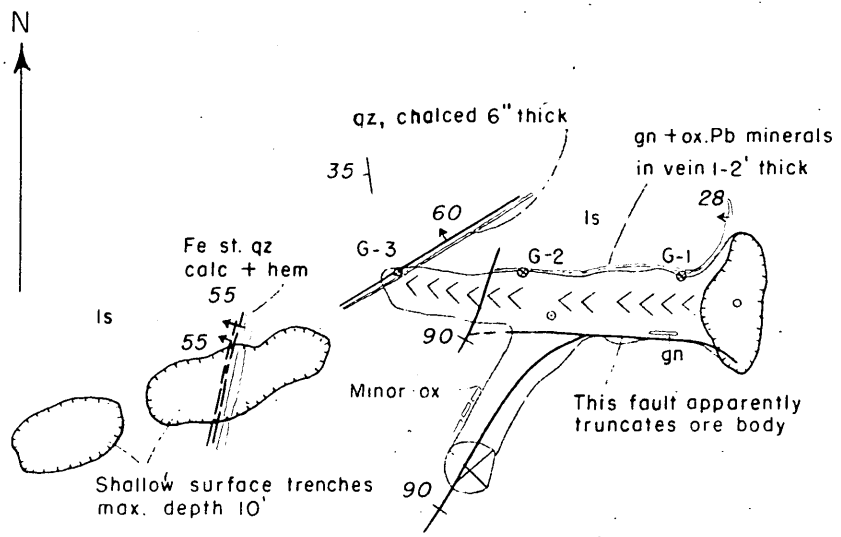

COMPOSITE MAP

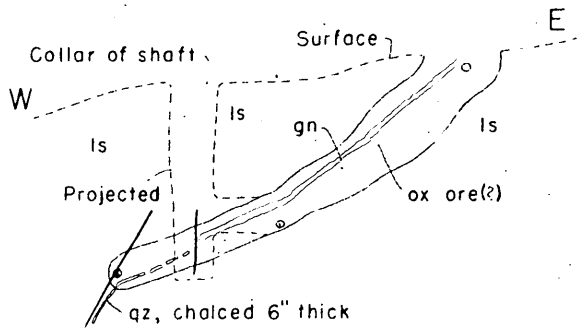

PROJECTION

Mapped by E. M. MacKevett
and L. A. Brubaker
May 29, 1951

MAIN WORKINGS GRANDVIEW MINE (LEAD-ZINC)

BLACK CANYON MINING DISTRICT, INYO COUNTY, CALIFORNIA

0 25 50 FEET

a.e.c.

UNITED STATES
DEPARTMENT OF THE INTERIOR
OSCAR L. CHAPMAN, SECRETARY

DEFENSE MINERALS ADMINISTRATION

REPORT OF EXAMINATION BY FIELD TEAM
REGION III

DMA-1139, Grandview Mine, Inyo County, California

Edward M. MacKevett, Geologist
U. S. Geological Survey

Lewis A. Bruhaker, Geologist
U. S. Geological Survey

June 11, 1951

Introduction

The Grandview mine consists of several claims located at elevations near 8000 feet in the Black Canyon Mining District on the west slope of the Inyo Range, about 12 miles northeast of Big Pine, California. From the junction of the Westgard Pass Road and U.S. Highway 395 (0.5 miles north of Big Pine), the Grandview mine is accessible to automobile travel by going easterly on the paved Westgard Pass Road for 13.0 miles, travelling northerly on the White Mountain Road, a good dirt road, for 5.3 miles, and then travelling westerly on a fair dirt road for 1.8 miles to the mine camp. The nearest railhead is at Zurich,, 18.1 miles from the mine over the aforementioned route.

The authors spent two days examining the property, and were accompanied in the field by Jarrell S. Wisdom, the mine owner, for half of one of the days. Field work consisted of examining all of the workings on the claims, making an underground map of the most important working, sampling, and a general reconnaissance of the immediate area.

Data on the application concerning equipment, development work, and other assets of the operators appears to be essentially true. However, the spring mentioned in the application is undeveloped and lies in the bottom of a canyon about 2000 feet lower than the mine.

Geology

A thick sequence of Cambrian(?) sedimentary rocks with prevailing northerly strikes and moderate to steep westerly dips is the exposed country rock in the Grandview Mine Area. Limestone is the most abundant rock, but quartzite and phyllitic limy shale are present to lesser extents.

The only probable lead-zinc ore at the Grandview mine is exposed in the main workings (see attached map) and is largely an oxidized bedding-plane replacement from six inches to two feet thick. Small amounts of galena, anglesite(?), and hemimorphite in a highly iron-stained, predominantly carbonate gangue compose this body. The irregularly-shaped ore(?) zone is truncated on the south by an east-west trending fault, and it crops out for only 12 feet along its strike to the north. This replacement body thins in its down-dip portions, and its lowermost underground exposure is apparently cut by a northeasterly-trending fault.

Other mineralized zones at the Grandview property include several generally easterly-trending, steep-dipping, hematite-rich quartz veins from 6 to 18 inches thick, and a few highly-oxidized siliceous veins essentially parallel to the bedding.

The easterly-trending quartz veins are persistent and traceable over most of the area. Megascopically they appear to be made up largely of quartz with a fair amount of hematite, some pyrite and limonite pseudomorphs after pyrite, and very minor amounts of bluish copper stain. These veins were reported by the applicant to assay

fairly high in gold, however they seem devoid of any lead-zinc-copper production possibilities.

The siliceous veins parallel to the bedding lack lateral continuity. Sparsely distributed galena in a quartz matrix is exposed in one prospect pit, and this constitutes the only observed ore mineral in these veins. It is likely that the highly-oxidized parts of these veins contain small amounts of secondary lead and zinc minerals, but none were discernible in the field.

Conclusions

As stated in the application, the applicant intends to drive a 800 foot crosscut from a point on the hillside to intersect the probable ore of the main workings at a depth of 100 feet or so. (A previous operator reportedly (by Wisdom) struck ore at a depth of 93 feet with a diamond drill, but although the drill hole is present there are no cores or other records available to substantiate this statement).

Driving the proposed crosscut does not seem feasible for the following reasons:

(1) a recent shipment from the probable ore body in the main workings was unprofitable and there is no reason to believe that an increase in the tenor of the ore would occur with depth.

(2) there is a good chance of a crosscut missing the downward extension of the replacement body of the

main workings on account of the irregular shapes characteristic of replacement bodies and the probable faulting of the down-dip portions of the replacement body under discussion.

The currently inactive Black Canyon mine, which borders the Grandview claims on the east shipped 900 tons of ore that averaged $60 per ton prior to 1947 1/. The geologic environment at the Black Canyon mine is similar to that at the Grandview mine and the majority of the Black Canyon mine's ore production came from a westerly-dipping replacement vein.

There is a fair possibility that diamond drilling could be successfully employed to locate and delineate ore at the Grandview mine.

1/. Norman L.A. Jr. and Stewart R.M., Mines and Mineral Resources of Inyo County: Calif. Jour. of Mines and Geology, vol. 47, no. 1, p. 58, 1951.

EXPLANATION

60
Fault, showing dip

90
Vertical fault

55
Shear zone, showing dip

35
Strike and dip of beds

28
Ore, protore, or gangue, showing dip

Shaft going above and below level

Inclined workings (Chevrons point down)

⊗ G-3
Sample locality

Abbreviations used
calc --- calcite
chalced --- chalcedony
gn --- galena
hem --- hematite
ls --- limestone
ox --- highly oxidized ore or protore
qz --- quartz

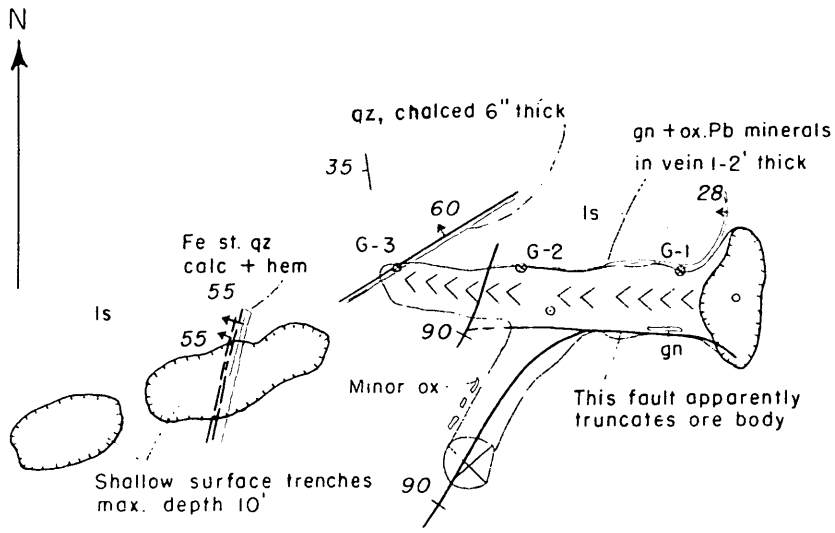

COMPOSITE MAP

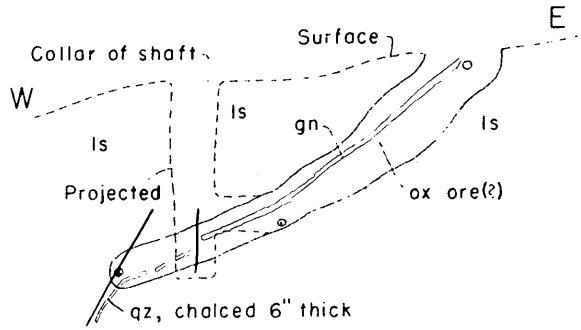

PROJECTION

Mapped by E. M. MacKevett
and L. A. Brubaker
May 29, 1951.

MAIN WORKINGS GRANDVIEW MINE (LEAD-ZINC)

BLACK CANYON MINING DISTRICT, INYO COUNTY, CALIFORNIA

0 25 50 FEET

June 24, 1951

U.S. Dept. of Interior
D.M.A. Wash. D.C.

DEPARTMENT OF THE INTERIOR
Defense Minerals Administration
RECEIVED
JUN 29 1951
LANDON F. STROBEL
Executive Secretary

Dear Sir:

I have just returned from Log Springs New. where I have a mining property, it consists of lead-zinc-copper, I have 40 acres & good roads & water, I have all necessary housing & mining equipment, I have just aquired a dump truck & a 15 ton mill, I have already signed a application for a D.M.A. loan in Calif. my Docket # is 1139X. now I request you send me another application form, as I wish to apply thru D.M.A. for aid on this property.

Sincerely

JUN 29 1951

Jerrell S. Wisdom
14631 Sherman Way Van Nuys Calif.

~~FILE COPY~~
SURNAME:

UNITED STATES
DEPARTMENT OF THE INTERIOR
DEFENSE MINERALS ADMINISTRATION
WASHINGTON 25, D. C.

McKnight
Errfo

File Sent To
5/22/51

May 18, 1951

Re: Docket DMA-1139
Lead,zinc,copper
Application of Grandview
Mining Company
Jerrell S. Wisdom
14631 Sherman Way
Van Nuys, California

Mr. Harold C. Miller
Bureau of Mines
1415 U. S. Appraiser's Building
San Francisco 11, California

Dear Mr. Miller:

Subject docket requests an exploration loan amounting to half of the amount needed ($8,220) to crosscut 200 ft. to ore.. Applicants share to be in following form, as near as we can interpret the application:

Labor of the 2 partners at $15 per day each for 3 mos.	$ 2160
(NOTE: one statement suggests applicants expect to be paid for last 2 mos.)	
Rental of compressor and hoist at $15 per day each, for 3 mos.....	2160
Cash on hand.....	1000
	$ 5320

The breakdown of contributions by applicant is somewhat more than half of the total amount needed.

The project needs an examination (if the property is not already known to field team) to determine if the proposal has any geoligic merit as an exploration project. If so, we would like to have an appraisal from the field team as to whether the objective can be attained at costs estimated by applicant, and an appraisal as to adequacy and fairness of applicant's proposed contributions. Perhaps applicant's statements as to costs and contributions shoud be confirmed as application is nearly unintelligible. A recommendation from the field team is needed. Does applicant have any proven reserves?

Very truly yours,

ETMcKnight:emp
G 5/18/51

Tom Lyon
Chairman, Coordinating Committee

Copies to:
Chief,Lead-Zinc Br.
E. T. McKnight 4204 GSA
L. B. Moon
R.H. Mote

Approved:

Lowell B. Moon
Member, Bureau of Mines

Olaf N. Rove
Member, Geological Survey

L. F. Strobel
Tom Lyon
Directors reading file 4214 GSA
Br. reading file 4214 GSA

FILE COPY
SURNAME:

UNITED STATES
DEPARTMENT OF THE INTERIOR
DEFENSE MINERALS ADMINISTRATION
WASHINGTON 25, D. C.

May 18, 1951

Re: Docket DMA-1139

Mr. Jerrell S. Wisdom
14631 Sherman Way
Van Nuys, California

Dear Mr. Wisdom:

The Lead-Zinc Branch has reviewed your application for a loan to explore the property of the Grand View Mining Company in Inyo County. The application has been returned to Mr. Harold C. Miller, Executive Officer of the Field Team, 1415 U. S. Appraiser's Building, San Francisco 11, California for further information and advice.

Very truly yours,

Tom Lyon, Director
Supply Division

ETMcKnight:emp
G 5/18/51
Copies to: J. H. East, Jr Region IV (2)
Chief, Lead-Zinc Br.
E. T. McKnight 4204 GSA
L. B. Moon
R. H. Mote
L. F. Strobel
Tom Lyon
Directors reading file 4214 GSA
Br. reading file 4214 GSA
Files

FILE COPY
SURNAME:

UNITED STATES
DEPARTMENT OF THE INTERIOR
DEFENSE MINERALS ADMINISTRATION
WASHINGTON 25, D. C.

May 10, 1951

Mr. Jerrell S. Wisdom
1463½ Sherman Way
Van Nuys, California

Subject: DMA-1139 X
Re: Exploration Loan -
Grandview Claims

My dear Mr. Wisdom:

Receipt is acknowledged of your application and attachments for a Government loan under the Defense Production Act of 1950.

The application was assigned Docket Number 1139 X and referred to Mr. Otto Herres, Chief, Lead-Zinc Branch, on May 9, 1951.

In any future correspondence relating to your application, kindly refer to DMA-1139 X.

Sincerely yours,

LANDON F. STROBEL

Landon F. Strobel
Executive Secretary

LFSTROBEL:aec
cc: Strobel-2
Files
Mr. Herres
Mr. Lyon

Dma-1139X 14631 Sherman Way
Van Nuys, Calif.
4-53-51

Refer to	Noted	Date
Answered		

DEPARTMENT OF INTERIOR
BUREAU OF MINES
REGION III
RECEIVED
MAY 3 1951
SAN FRANCISCO, CALIFORNIA

D. M. A.

Dear Sirs:

In accordance to Form MF-103 & questions intered This is an att'c explanatory extract to questions involved to property & qualifications intered to int!

RE- INST & Procedure

1. Partnership 60% + 40% adventure Business agreement!

2. Clyde H. Ramin 80 21½c Sulphuleda Rd. Van Nuys Calif. Jennell S. Wisdom 14631 Sherman Way V.N. Calif.

3. None

4. 7 Years 6 yrs. experience in Surfact territory C.H. Ramin 1½ yrs Wis. territory (Milwaukee)

5. Owner 7 claims lease 3 claims.

4. None!

II

Application for Oil & Exploration
P-P-M.O. 5 U.D.B.A. of 1950

7. It is in Good Standing it joins Cahlcolony & Franklin 5-1-to 5-1 C-1st & 2 —
All reds. in it our expense. option to purchase ~~1500~~ $1500.00 5 yrs Bond to op.

8. to date 11,000.00 Spent exploration & development. Recorded information (Ledger Form. Bre) we have a detailed report recorded Per, Basis available information available under Calif. Min. laws.
Will furnish on part, effective 24 hr. notice!

9. We will furnish on a per Rate Miners 15.00 pr. day - Comp. 15.00 pr. 8 hr. day. Hoist 8 Hr. day 1500. Misc. mining equipment etc.
Hr. total 60.00 Per. 8 Hr. day. 4 days Per. week. Plus adequate cash up to $1000.00

10. Chalcedony #1 + 2 – Bustups 1# – #2 – #3 – The 5 Grandviews
These properties all adjoin and will be worked, either drift from Chalcedony #1 – or Bustups – as Illustrated
We will work and operate as the Grandview Mining Co. Big Pine, Gen Del. Calif. The Scale shows original names but they are the Grandviews 1 – to 10 now.

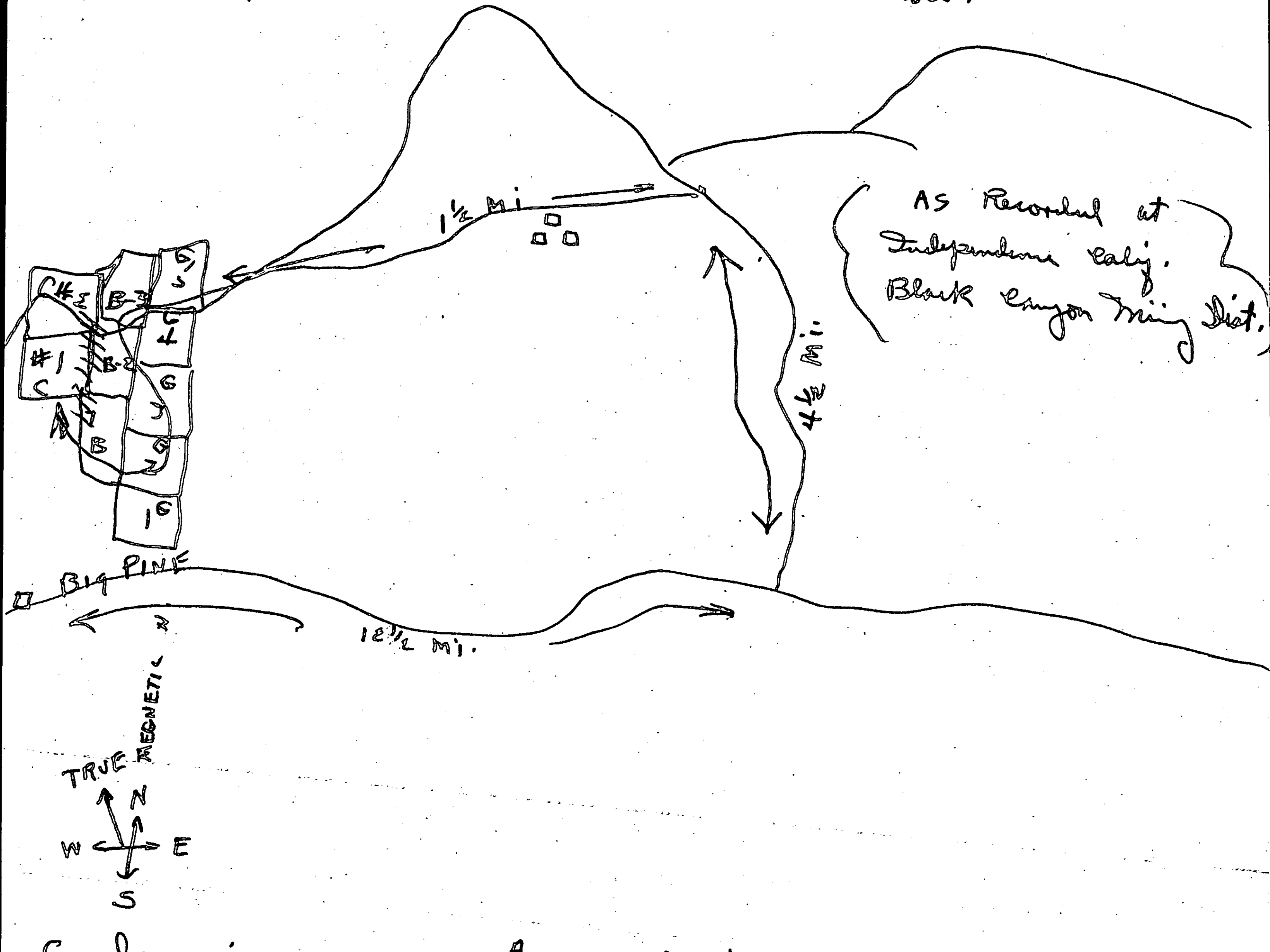

G = Grandviews
B = Bustups
C = Chalcedony #1
C = " #2

[camp symbol] = Camp
[road line] = Roads – State maintained
\\\\\\\ = Ore body & mineralized zone

11. as shown on map. The claims I own all now so I will call them the Grandview claims.

12. The Grandview property is located in the Black Canyon mining dist. By lower road 9 mi. from Big Pine Calif. by upper Rd. appox 20 mi, there is a R.R. & loading ramp at Big Pine. The Property lays to a N.E. Direction of Same. The Roads are good, paved for 12½ Mi. and a State Maintained dirt road to mine. with the exception of the last 1¼ mi. which we maintain ½ with Marvine Albertoli (owner of the Albertoli mining Property joining our property — This property lays at 6000' and can be worked for 10 mo. pr. yr. There is water appox. 9 mines inches below property where its possable to build 2 mi of switch back rd. to install mill. you go down with one & come up empty. Cost $500.00 to put road in. after this work is done its 9 mi to railroad downhill all way, Good road possable all yr.

to cut initial expense then by driving appox 20 mi
There is the old road we shipped ore on last yr.

13. Plenty water available all yr. with exceptions
of flooding, which would halt operations for
a day or so at a time — Gasoline Burden engine
cost appox 15.00 pr. day for mill & hoist & compressor
14. We use coleman lights and carbide lamps.
3 cabins, timber appox 1000' — trees plenty
for timber sets — 1 — compressor 120' — hose
steels, tools, work shank, headframe's — skip
buckets, Grizzly — hoist, cables, and all
necessary equipment to mine — all set up ready
to go —

15. I can ship my 15% ore to Selby (S.F.)
The cost is by Rail $4 to $9.00 pr. ton
on appox 60.00 ore, richer ore will graduate
according Plus 1%.
I can mill (until I get going) the old
Dutchman mill — 4 mi haul — $2.50 pr. ton
I propose to mill all ore up to 15% over

15. over 15% I intend to ship.

16. I shipped 20 tons ore lead - Silver - ~~Gold~~ Copper, Zinc - the original discoverers I (A) dont know - but there was some tin-Bracing as old abandoned employees is still there —

(A) as stated we went down 40' drifted 30' & dog legged 15' & crosscut approx 30' taking 20 ton tin Grade & approx 30 ton mill ore. We ceased operation because prices fell in 49 and we backed enough money to carry on. We cannot operate on 9¢ lead & 12¼¢ Zinc But we can at present prices!

(B) Albertoli Mine has produced (to my knowledge) approx 10 cars — high Grade & has blocked 2500 ton mill ore.

this is an old property Albertoli's father shipped many cars ore (his is same as mine) But I do not know how much - it is a large mine

1B) Tho and also has good one in sight.

Blank Canyon Mine - its an old mine & do not know how much one produced, but it was worked in 1916 — and is large

Montezuma Mine - large old mine. Reputedly large producer - & dont have figures but produced largely — the Bureau of Mines would have data, & dont!

1B) the Hot mine just South of me, produced according to (Bob Blake owner) several hundred tons.

(C) a Mr. M S Hinsey (Engineer) & past owner of the Shadow Int. Mine looked at my property he says & have a good prospect. he did not give me a report as they lost money but he did tell me to sink further on Carbonates as they should get richer as & get depths

(c) The State Bureau of Mines (Inspector) saw the property and could not make a report as he was not allowed to. but he corroborated Mr Hennys statements. he further said I should go on with operation if I could afford same. I told him I was broke & couldnt even pay for a Geo. Reading or Eng. Report. we open cut (3 places all one) $6 to $14.00 on surface. appox 100' wide (Prospectors assay) also private assays — I also went over property, panned & acidized, showing was satisfactory —

17. shipped 20 ton — prospected by driving 5 test holes from 6 to 30' deep, one 15' open cut I took averages from all & got $18.75 for an area of 1000' X 500'

also for 3200' on surface I have a Silicon dyke that averaged $6.00 pr. ton averaged surface

18. this one runs from lead carbonates to an outcrop of quartz - from S. TO N. as shown on Map. Page III — this whole area from S TO N. is intrusive of quartz & Sericite - the Galena one is encased in lead carbonates in a calcite formation. there is lime & Slate aplenty on surface. and Bedding plane is in place. There is some cracking & fractures on surface (no faults) but organic Volcanic formation on Bustos — but down 40' it solidifies — Then to N. it is solid & turns into quartz & carries good Galena, Zinc & 1½% copper — the 3 mineral belts shows magnetic N — & there are 3 of them, I am on 2 of them & Albertoli is on the upper — Right to E.

(B) Most assays & maps I sent to prospective Buyers —

X

(c) I would say several hundred ton in sight. however most is still ore. the ~~high~~ rich one is deep. this is proved by my 90' of shafting. but there lots of surface ore good also.

1. lead carbonates approx 6 ear
2. Sulphide Galena ?
3. But have very nice showing going down!

(c) It is my and others both prospectors engineers & experienced men) it is our opinion that due to prices this property can be made into a mine of Economic consequence, there has been lots of ore hi graded & sniped out of this area. (But not 1 deep mine!) now therefore Albertolis property has paid, the Montezuma paid, the Ibex paid and not one of these mines hit real rich ore under 150' - Albertoli is on the same structure as I. the structure is shallow

Albertoli has a good showing of $400.00 ore! and 35' vein of $600.00 ore. now therefore he is producing, furthermore he hit high ore on a 150' winze - I am not deep enough! I know that but by hell I cant go further unless the Dom't. will help me. I can get money if I get a contract of 50% from you. otherwise I will have to just keep digging 30 to 60 days per. yr. as I did last yr. I plan to go up June 1st to spend a mo. doing assessment work & develope all I can meanwhile.

20. lead - Zinc - Silver - Copper, as this is the charterstic formation of ore.

21. we ought to complete setting up & producing in 60 days - it will take 180 days to produce in large quantity - at such a time if one just holds - no more - just holds up

21. I can produce 20 ton a day raw ore gr.
if ore invites I can produce + equip. for any
amount accordingly

Note! if Dolt passes on my property I mean
to go 300' under present working + drift a
tunnel 200' under structure, thereby raising
cross cutting + stoping out of a 6' x 8" working
drift, this will take 60 days — then I need
(if ore is proven) 30 more days to set up
mill + break 2 mi road to water, or pipe
same up to working (whichever is faster + cheapest.
But 1st I will drive tunnel — if ore disproves
I'll quit! I can furnish money 50% of Dame

NOTE. My ex partner has maps, information on
core drilling, and I dont know where he
is, but I'll draw project.

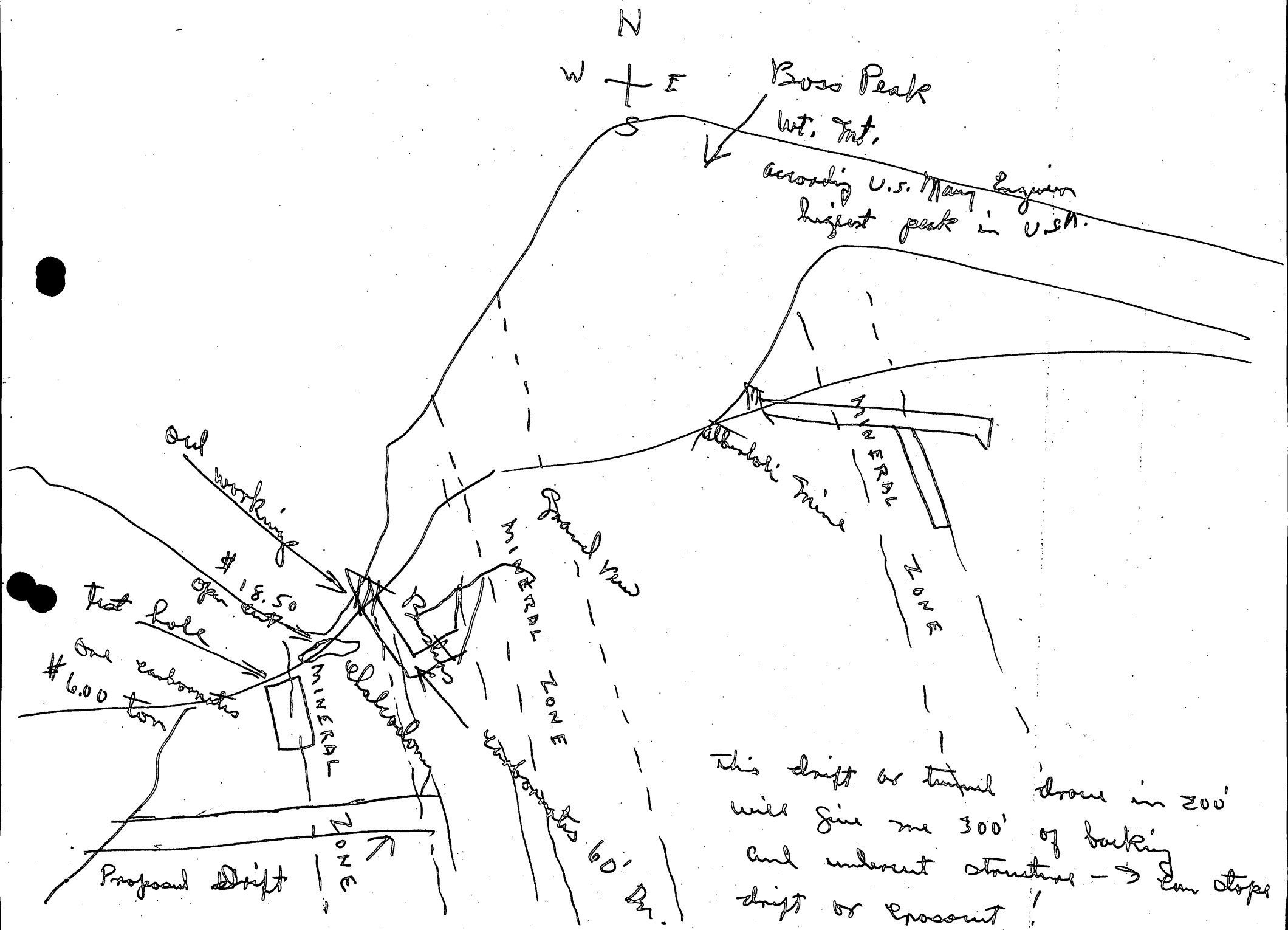
N
W
E
S
Boss Peak
Wt. Mt.
according U.S. Mang Engineer
highest peak in U.S.A.
Old working
$18.50
open cut
test hole
One carbonate
$6.00 ton
MINERAL
ZONE
Proposed Drift
Grand View
Albanoli Mine
Carbonates
60'
This drift or tunnel drove in 200'
will give me 300' of backing
and underout structure → Run stopes
drift or crosscut!

23. We have a business adventure among us. 3 of us. But we will charge off $30.00 day labor
use of compressor & hoist 15.00 Pr. day
(A) Commasary cost & food 10.00 Pr. day
We will not charge labor unless you require except at minimum wages.

(B) We will both Supervise no wages

(C) Overhaul motor on $150.00 Compressor - The rest is new condition
hoist, tools, cabins, bindery, etc

(D) after we get shaft in & one proves as expected a 20 ton Stamb ball mill. I can buy $5000.00 one local appr.
new condition

(E) Drill, truck, Build road — after one is proven or disproven after shaft is drive

Road	500.00
mill	5000.00
	$5,500.00

this money will be spent out of one only. no one no. mill — no Road —

(F) NONE (unless one proves)

(G) all total

1. compressor 15,00 pr. day
2. Hoist 5,00 " "
3. Commasary cost est. 10.00 " "
4. all Mining tools, est I'll furnish without cost to U.S.

We will need no more housing, we have it.

Housing	appox.	1000.00	— no labor just material
Roads	"	500.00	— cost no labor
Mining tools	"	2900.00	— our cost
Furnishings	"	1000.00	— our cost

XIV

(H) Timber mining appox 200.00
Dynamite etc appox 100.00
Food appox 2000.00
Misc expenses

this does not count our labor of appox. 4,320 man hrs, based on $1.50 pr. hr. 6,480.00 labor.

Cost to us for Property total (clubs, etc, $3,700.00

cost of Equipment, housing & tools, food, etc	$8,000.00
cost of land ?	3700.00
labor man hrs.	6480.00
	$18,180.00

it would cost uncle Sam to do what we have done — this is a conservative figure and we have Recorded & Record of Same estimate! Dates, expenditures & Receipts!

IV

I judge working under Business adventure agreement, and doing our own work we can produce in 90 days if one makes as expected we'll need appox $8000.00

if one does not prove on proposed drift we will quit.

now to drive shaft it will cost appox $5000.00 all told or less

We are ready — send out Engineers if they O.K. then we will proceed also will furnish any data you require. Sincerely Jerrell S. Wisdom 60%

XVI

Signing for Clyde Ramin 40%.
In our Business adventure
agreement I have p.o.a.
to do business & direct
all Business & project.

Thanks

Refer to	Noted	Date
Answered		

FINANCIAL STATEMENT

GRANDVIEW MINING CO. Dma-1139X

BIG PINE CALIF,

GEN. DEI.

Page 9.

DEPARTMENT OF INTERIOR
BUREAU OF MINES
REGION III
RECEIVED
MAY 3 1951
SAN FRANCISCO, CALIFORNIA

8. ASSETS

APPOX. 200 acres mineral land
fritchin deeds ect.

1. Chalcedony 1 + 2 paid cash (B.J. Fritchi)	#	400.00
2. Grandviews 1 to 5 Paid (B.J. Fritchi)	#	1000.00
3. Last chance 40 acres Paid Q.D. (M.M. Homer)	#	400.00
4. Water Rights Black Canyon Pd. (Elzy Smith)	#	200.00
5. 1 C.P. 110' Compressor paid cash		600.00
6. Mining tools ect Paid cash		1000.00
7. 1 Wisconsin 1000# hoist		325.00
8. 1000' timber		60.00
9. 1000' oak ties		100.00
10. 3 cabins built owner has cost material		1000.00
11. Roads		500.00
12. 2 headframes		200.00
13. Dynamite, food + furniture approx.		1000.00
14. 1 tool house		200.00
these items were bought May 1, 1949 pd. cash Net.		6,985.00

Liabilities (Business venture agreement) None!

Profit & loss from May 1, 1949
To Mar. 22, 1951

We spent for property & equipment		6,985.00
our labor based 1.50 pr. hr.		4,480.00
use of Equipment 30.00 pr. day.		1,080.00
		14,445.00
Bills outstanding		
Jim Nikolaus	190.00	
Inyo Lumber Co.	30.00	
due	220.00	

One shipped Smelter net $180.00

We organized the Grandview Mining Co. May 5, 1949 and have a business adventure agreement.
We paid ourselves no labor at.
This plan was to improve & develope said property.
Work done. 90' shafting.
test holes appot 90'
Open cuts est.
We built roads, camp & drove shafts on one
We ceased operation, after we had exactual our available fund — since then we have kept up our assessment work & done limited exploration work!

Requirments and cost!
Page 1.

appertaining to question 23 —

(A) Labor — J.S. Wisdom + Clyde C. Ramin
Business adventure agreement we have paid ourselves no wages. but if Gov't. O.K. this application we will operate + pay as follows.

A. 2 miners 8 hr. day 6 days pr. wk.
24 work days pr. mo. weather permitting $720.00 pr. mo.
we will finance ourselves the 1st mo.

C. Compressor + hoist 30.00 pr. day. 24 W.D. pr. mo
720.00 pr. mo.
we own these

B. No Supervisors (only us) or any Engineers none
not we need we can get.

(E) Shafts are in good order, having new cond'tn. none

(D) none

(C) none

(F) none

(G) Comp. hoist, equipment, tools set as stated above.

(h) as explained on page 9. Financial Statement!

(i) power cost! we use a gas driven comp. 8 hr run gas & oil cost $24.00 pr. day

we use coleman lanterns for housing light.
we use carbide lamps in mine
we use Butane stoves for cooking.
total power & fuel bill $100.00 pr. mo.

we have spring water no cost.
use of truck in mining $100.00 pr. mo.

24. we can complete exploration within 90 day's of go ahead by Gov't. in this time we expect to drift 200' to cross cut structure. after completion of drift we can cross cut with appox 200' of backing on a 4 x 8' frame. one should pay all expenses after 90 days.

we will operate on a business venture agreement & total cost will run. appox $5000.00 of which our labor & equipment (after 1st 30 days will pay for exploration. as stated we will operate. example will be given on next page

Requirements & Cost
Page 3.

24. (A) total labor pr. mo. $720.00
(B) total rentals pr. mo. $360.00

compressor $360.00
Hoist
misc. tools, truck, food, housing (fuel) $300.00
ect. power. pr. mo.

total cost pr. mo. 1,740.00

As stated we feel we can produce within 90 days. total cost until we can produce $8,220.00

we can furnish up to $1000.00 cash if needed. by borrowing & depositing of holdings ect.

NOTE!

We feel these statements are true to the best of our knowledge and invite Gov't. Engineers out to inspect property at their earliest convenience, as stated we will operate & attempt to produce as stated!

Note!

Being practical miners we want to operate temporarily on a Business adventure agreement, because it is the cheapest & simplest way to mine today.

We want to attempt to produce copper, lead, Zinc, for the Govt. and do it the cheapest & quickest way possable. and we feel as stated in application we can do as proposed in 40 days If we are wrong in our calculations, then we will obey any direction from the Govt. as agreed. We have at our disposal at no cost to us Senior Geologist, & 4 first mining men for advice & information

We feel the Geo. is correct and we know the Strata is shallow in our area. We are down in magma to secondary enrichment zone furthermore there are shallow producers in our Dist. We know we are in an instructive Region, however there is no sign or showing of faults. This ore was intruded by a process of percolating waters after fractures were made

The original calcite formation being impregnated by Volcanic intrusion & internal pressure. these fractures caught deposits of lead, tin, copper due to percolating waters. This is borne out by oxides surrounding galena tin formation. Also area is impregnated by Hearmatite of Iron running in great quantity dyke on our right, showing intrusive pressure to same below.

You have your own Engineers and 'em out, we will not attempt to sell you. You must sell your selves. We are already Sold.

We can move up to operate on a 48 hr. notice

Sincerely

Jewell S. Wisdom
14631 Sherman Way
Van Nuys Calif.

April 16, 1951

Mr. Jerrill C. Wisdom
14631 Sherman Way
Van Nuys, California

1139X

Dear Mr. Wisdom:

This will acknowledge your letter of March 5. Enclosed are a press release announcing issue of the regulations concerning the exploration program of the Defense Minerals Administration, a copy of the regulations, and application forms for exploration and other types of assistance.

If you have sufficient proven reserves of strategic minerals, Federal aid in mining can be given through procurement contracts for such materials as are in short supply. On the strength of these contracts, an applicant can obtain private financing in most instances. At present, procurement contracts are being made for copper and zinc. If you have sufficient proven reserves of these or other strategic metals to justify a procurement contract, application should be made on Form DP 100, "General Technical Data for use under the Defense Production Act of 1950". Before final approval your project would be investigated by Government field geologists and engineers. The effect of a procurement contract would be to insure a floor under your market price for three or perhaps more years.

If you do not have sufficient developed reserves for a procurement contract, you may want to request aid through the exploration program, which calls for participation on the part of the applicant. For zinc, lead, and copper deposits it will be necessary to match Government funds on an equal basis. Funds advanced by the Government will be considered a loan, to be repaid if the exploration is profitable, but to be canceled if unsuccessful. Application should be made on Form DP 100, mentioned above, but in addition, Form DP 103 should be prepared, answering only those questions not previously answered on Form DP 100.

I trust that you can find in some part of this Government aid program a way to help you in your mining.

McKnight:emp 4/16/51 Very truly yours,
Copies to: H. C. Miller Region III (2) Otto Herres
Chief, Lead-Zinc Br.
E. T. McKnight (For) Otto Herres, Chief
L. B. Moon Lead-Zinc Branch
R. H. Mote L.F. Strobel
Enclosures C.O. Mattendorf
Files

LYNDON F. STROBEL
3-5-51

Dept. of Interior:
D. M. A.
Otto Herres:
Dear Sir:

Thanks for consideration involved in answering my letter.

As you say it is difficult to write a letter explaining the proposition, also I am looking forward to the forms you mentioned, and hope I can that really producing in the near future; as I said tho to produce 50 tons a day I will need a mill, tank & dozer. until then I will continue to work & develope in a small way.

I have a shaft down 60' now on one also we drilled to 9.5' on one, but ran out of money. We think tho we have enough zinc & copper to interest the Gov't. I hope you can have

II

Just one of your engineers soon as we are ready and anxious to produce. I have spent 11,000 to date developing and cannot go on without help. Regardless of good prices this is my dilemma to date.

Will I shipped copper at 14¢ and lead at 8 3/4 so I guess I can mill 50 to 60 oz ore.

I have lots of it.

Hoping to hear from you soon

Sincerely

Jerrell S. Wisdom
14431 Sherman Way,
Van Nuys Calif.

MAR 14 2 26 PM '21
WASHINGTON, D.C.
BUREAU OF MINES

LANDON F. STROBEL Jan 4, 1950

1-15-51
Herres

BUREAU OF MINES
WASHINGTON, D.C.
JAN 15 8 45 AM '51

Mr. James Boyd:
Defense Minerals Administration:
Dept. of the Interior
Washington D.C.

Dear Mr. Boyd:

I have been referred to you by Mr. H.C. Miller at San Francisco Calif. and I will try as best I can to explain to you what I have to offer & ask you, if my plan is not sound (how may I go about, to qualify for a Gov't. loan to finance (or assist) me in continuing my mining & to produce critical mineral for the Govt.

First I am a Vet. second I have in the last 2 yrs. put into my mining properties appox. $11,000 cash

I have completed my Basic Exploratory work as follows. I have down appox 300' of test holes, shafts, drifts, cross cuts & open cut trenching — consequently now I have appox 2500 tons of mill ore m[redacted]

(over please)

Mr Strobel

The first and past pages were made on this communication. Presume that will be sufficient for controlling; if not, please return and remaining pages will be copied

Marsh

O.K.
L.J.S.
1/16

5. we will need a loan to procure mill truck & build road — as explained

6. — to Question 6 regulation 9 — as explained

as I afore mentioned I would have to take a Gov't. Engineer up to camp to let him inspect mine & terrain to go further & get facts & figures —

We are not operating now, but I hope & will start in March —

— Albertoli - Grandview Proposal —

thanks

I hope to hear from you at an early date. I want to mention I am broke, and dont want to put out 5 to $600.00 for Geo. & Engineers reports unless I can qualify to meet the Govt. requirements however if this proposal meets your approval then most entirely I will submit anything further you would require.

Sincerely Jarrell S. Wisdom

Staebel

February 19, 1951

Mr. Jerrill S. Madsen
Grandview Mining Company
Big Pine, California

Dear Mr. Madsen:

Your letter of January 6 to Mr. James Boyd inquiring about government aid in developing your mining properties near Big Pine has been referred to me for reply. Your letter states that you will not return to Big Pine until spring and that until then your address will be as given at the end of your letter, but you neglected to add the address when you signed the letter. Hence we are writing you at Big Pine, hoping that the letter will be forwarded.

Federal aid to expand productive capacity and supply of strategic and critical minerals, as provided in the Defense Production Act of 1950 is taking the following forms:

1. Purchase contracts made by the General Services Administration on projects certified by the Defense Minerals Administration.

2. Accelerated amortization of equipment allowed under the tax laws to operators having certificates of necessity issued by the National Security Resources Board.

3. Encouragement of exploration and development.

When procedures for encouragement of exploration and development have been worked out in detail, which we expect soon, they will be given wide publicity.

Purchase contracts are being made for zinc at the present market price for a period of two years. For copper, purchase contracts may be for a period greater than two years. Because the expected supply of lead is believed to be ample for the needs of national defense, no specific purchase program has been set up for lead.

Your letter gives some of the information that we need for judging your property, but considerable additional information is

required. A new form on which such information can be given will be available in a few days and will be forwarded to you at that time.

Very truly yours,

OTTO HERRES

OTTO HERRES, Chief
Lead-Zinc Branch
Defense Minerals Administration

AMcKnight:emp
Copies to: Chief, Lead-Zinc Br.
Geological Survey - McKnight
J. H. Hedges
R. D. Rote
2 copies to Executive Officer,
Regional Field Team, Region III
Stroble
Mittendorf
Files

DMA 1139

Jerrell S. Madison
Van Nuys Calif

Explorer Scouts

ED. EISENHAUER, JR.
320-322 So. San Pedro St.
Los Angeles 13, Calif.

ASSAY CERTIFICATE

PHONE VANDIKE 9328

Los Angeles, Calif. April 27/49 194

I hereby Certify that the samples described below, received from

S.L.Holmes assay as follows:

Owner's Mark and Sample	GOLD		SILVER		TOTAL VALUE PER TON	PERCENTAGE OF		
	OZS. PER TON	VALUE PER TON	OZS. PER TON	VALUE PER TON		COPPER	LEAD	ZINC
Buster # 1	.02	$ .70	60.00	$ 54.00	$ 198.70		48.0	
Buster # 1-Minus	.02	$ .70	.11	.10	.80		trace	
Buster # 1-Plus	.01	$ .35	.10	$ .09	$ .44			

NOTE! This figure came from Barbara Vi[illegible] average that was $60.35 for 30' X 40'

GOLD @ $ 35 PER OZ.
SILVER @ $ .90 PER OZ
LEAD @ 15 c.
COPPER @ ____ c.

CHARGES 4.75

ASSAYER

COMPLETE ANALYSIS
ON
ALL ORES

CONCENTRATE SAMPLING
CONTROL ASSAYS
UMPIRE ASSAYS

BOYLAN & VAN VOORHIS

ASSAYERS - - - CHEMISTS

PHONE 533
318 NORTH MAIN STREET
BEHIND BISHOP HARDWARE
BISHOP - CALIFORNIA

August 9, 1949

Mr. Jesse Wisdom
Big Pine, California

1½ ozs

Assay Report

Lab. No.	Identification	Ozs. Au	Ozs. Ag	% Pb	Value/ton
1001	Buster # 1-1	0.01	4.94	5.62	$ 20.95
1002	" # 1-2	0.01	14.44	9.90	42.10
1003	# # 1-3	0.02	18.32	14.90	60.35
1004	" # 1-4	tr.	2.08	4.08	6.80

3200' AV, 1000 x 500 AV FROM BOTTOM OF SHAFT.

Chalmers 30' test hole

Value calculated:
Gold@ $ 35.00
Silver @ $ 0.90
Lead @ 14½¢

B. W. Van Voorhis Jr.

ALLISON J. GUNN

ASSAYER

LONG BEACH, CALIF.

543 EAST ANAHEIM STREET
NEAR ATLANTIC
TELEHONE 627-91

DATE. Aug. 7 1950.

CERTIFICATE OF ASSAY

SAMPLES ASSAYED FOR Mr Carl Fritzen.

GAVE THE FOLLOWING RESULTS PER TON OF 2000 POUNDS.

NO.	MARKED	GOLD OZ. HDTS	GOLD VALUE AT $ 35 PER OZ.	SILVER OZ. HDTS	SILVER VALUE AT 90½¢ PER OZ.	NO.	METAL	PERCENT	POUNDS PER TON
	Sample.----------	.015	.52½¢	4.08	$3.69	--	Lead.--	5.3--	106-*
**********	**********	**********	**********	**********	**********	**********	**********	**********	**********

NOTE!
This is the mate to a 4 way
smelter return cut.
This dont show copper & Zinc
Paul bought the truck
This is out of shadow
#2 on surface to 15' x 6' x 6'
open cut down

CHARGES $ Paid.

THANK YOU

ALLISON J. GUNN, ASSAYER

BY Allison J. Gunn

Don't walk over your Fortune to save a few cents!

Ph. Redondo Beach 40248

5 way
Smelter
Spec. — & assay

lead	$18.02
Silver	3.69
Gold	.52½
copper	2.60
Zinc	13.60
	38.43½

low average

Ph. Redondo Beach, 40248.
Call at Night.
206 S. Pacific Coast Hy.
Redondo Beach,

→ track this assay over 100'
low average

$22.23 net.

Spl. Smelter shows 1% copper + 4% Zinc

Not counting Zinc + copper

Sub Lease

Lease Form

WITH AGREEMENT FOR SALE OF R. E.

THIS INDENTURE, Made the 19th *day of* April, *19* 49

BETWEEN B.J. Miche of Big Pine, Calif.

AND Gerrell A. Wisdom. *part* y *of the first part,*

the part ____ *of the second part,*

WITNESSETH: That, for and in consideration of the payments of the rents, and the performance of the covenants contained herein, on the part of the said part ____ *of the second part, and in the manner hereinafter stated, said part* ____ *of the first part does hereby lease, demise, and let, unto the said part* ____

of the second part, those certain premises situated in

County of Inyo, *State of California, described as follows:*

A sub_ Lease with all rights granted to Sub-lessee contained in in original lease to have, hold and hold for the benefit of Sub-lessee upon fullfilling conditions of said original lease.

All rights and title of original lease is hereby conveyed from original lessee to sub-lessee upon full performance of s-said original lease by sub-lessee. Upon failure of any of said ~~consit~~ conditions original lessee shall automatically revert to original lessee.

Copy- of original lease: Three claims known as the Buster No. I, Buster No. 2 and Buster No. 3 located in Black canyon Mining district, County of Inyo, State of California. Said lease to run for a period of three years with option to purchase at any time within the 3-year period for the sum of $3000.00, payable at any time within the three year period. A ten per cent (10%) royalty to be paid by the smelter to W.M. Kutch. It is also agreed that a 30-man shift per month be executed, weather permitting. It is further agreed that the lessee keep the property free and clear of any liens or indebtedness.

for the term of three years *months, commencing on the* 12th

day of February, *19* 48, *at the monthly rent or sum of* none

Dollars,

payable monthly in advance, on or before the ____ *day of each and every calendar month of said term, at*

B. J. Miche.

(P.S. I now have a 5 yr. lease being made up by lawyers)

37824

AND IT IS AGREED, that if any rent shall be due and unpaid, or if any default shall be made in any of the covenants herein contained, then it shall be lawful for the part_____of the first part to re-enter the said premises, and to remove all persons therefrom, and the said part_____of the second part agree___ to immediately surrender and vacate the said premises, and the agreement for sale thereinafter set forth and all rights of the said part_____of the second part here and thereunder shall immediately cease and terminate and become null and void.

AND the said part_____ of the second part do_____hereby promise and agree to pay to the said part_____ of the first part the said rent, herein reserved in the manner herein specified.

AND not to make or suffer any alteration to be made on said premises without the written consent of the said part_____of the first part. And it is further agreed that the said part_____of the first part shall not be called upon to make any improvements or repairs whatsoever upon the said premises, or any part thereof, but the said part_____ of the second part agree___ to keep the same in good order and condition at_____ own expense. The said part_____of the second part agree____ to pay water, gas and electric rates during the continuance of this lease.

SHOULD the said part_____ of the second part, during the faithful performance by_____ of all covenants of this lease, desire to purchase the said premises, then the said part_____ of the first part agrees to sell the said premises to the said part_____ of the second part at any time during the faithful fulfillment of the above lease, for the sum of_____

_____Dollars,

together with all sums which the said part_____ of the first part may have paid for taxes, insurance and assessments of whatsoever nature, and interest at the rate of_____ per cent per annum, computed monthly, from the commencement of this lease to the time of purchase. Any amounts paid as rent shall apply, first to the payment of interest due, second to the payment of taxes, insurance and assessments, and the balance shall be applied to the payment of the principal.

SHOULD the said part_____ of the second part fail to make any of the payments agreed to be made in the above lease or to fulfill any of the obligations of said lease or of this agreement, then the said part_____ of the second part agree___ to and hereby do____ relinquish all rights and interests created or conferred by or under this indenture and in all sums paid on said lease and in the property above described.

SHOULD damage by fire occur during this lease, all money received from said insurance shall be applied to repair said damage by fire or on advance rent at option of the said part..... of the second part, and aforesaid lease shall continue in force the same as before said damage by fire.

STATE OF CALIFORNIA
COUNTY OF INYO } ss

On this 23 day of July, A. D., 19 49, before me, EDITH MAY MENDENHALL, a Notary Public in and for the said County of Inyo, State of California, residing therein, duly commissioned and sworn, personally appeared

B J Michel

known to me to be the person whose name is subscribed to the within instrument, and acknowledged to me that he executed the same.

IN WITNESS WHEREOF, I have hereunto set my hand and affixed my official seal in said County the day and year in this certificate first above written.

Edith May Mendenhall
Notary Public in and for the County of Inyo, State of California.

My commission expires October ~~22, 1948~~ 21, 1952

— GENERAL FORM —
L. A. STAMP & STATIONERY CO.

THIS AGREEMENT is binding on the heirs, assigns, successors, executors and administrators of the parties hereto. It is mutually agreed that time is of the essence of this agreement.

IN WITNESS WHEREOF, the parties hereto have set their hands and seals.

B. J. Michel

No. 481

Lease

With

Agreement for Sale of Real Estate

With

Dated ....., 19.....

Filed for Record at the request of
Jewell S. Wisdom
JUL 27 1949
5 Minutes past 9 o'clock A.M.
Volume 80 of Official Records
Page 15, Records of Inyo County,
Calif.
Richard F. Ogden
By Nellie Fosin
Recorder
Fees for recording
Copied ..... Indexed ..... Compared ..... Mailed
$1.90 xd

Big Pine.

Deed to Mining Claim

QUITCLAIM

This Indenture, *made the* 27th *day of* April, *19* 49

Between

B.J. Miche and Elzo D. Smith

the part ies *of the first part,*

And

Jerrel S. Wisdom

the part y *of the second part,*

Witnesseth: *That the said part* ies *of the first part, for and in consideration of the sum of* Ten *Dollars, lawful money of the United States of America, to* them *in hand paid by the said part* y *of the second part, the receipt whereof is hereby acknowledged, have remised, released and forever quitclaimed, and by these presents do remise, release, and forever quitclaim, unto the said part* y *of the second part, and to* his *heirs and assigns,*

The following Described Mining Claim~~s~~:

Grand View Mining Claim. Situated in the Black Canyon Mining District, County of Inyo, State of California. Recorded in the County Recorders Office at Independence, California.

Together *with all the Dips, Spurs and Angles, and also all the metals, ores, gold and silver bearing quartz, rock and earth and kindred mineral substances therein; and all the rights, privileges and franchises thereto incident, appendant and appurtenant, or therewith usually had and enjoyed; and also, all and singular, the tenements, hereditaments and appurtenances thereunto belonging, or in any wise appertaining, the rents, issues and profits thereof; and also all the estate, right, title, interest, property possession, claim and demand whatsoever, as well*

in law as in equity, of the said part.....of the first part, of, in or to the said premises, and every part and parcel thereto with the appurtenances,

To have and to hold, *all and singular the said premises, together with the appurtenances and privileges thereunto incident, unto said part..... of the second part.*

In Witness Whereof, *the said part..... of the first part ha..... hereunto set..... hand.... and seal.... the day and year first above written.*

Elzo D. Smith

B. J. Michel

STATE OF Calif.
County of Inyo } SS

ON THIS 27 day of April, A.D., 1949 before me, Edith May Mendenhall a Notary Public in and for said County and State, personally appeared Elzo D Smith and B J Michel, known to me, (~~or proved to me on the oath of~~), to be the persons whose names are subscribed to the within Instrument, and acknowledged to me that they executed the same.

IN WITNESS WHEREOF, I have hereunto set my hand and affixed my official seal the day and year in this certificate first above written.

Edith May Mendenhall
Notary Public in and for said County and State.

No. 6112

Deed to Mining Claim

Quitclaim

To

Dated ....., 19....

Filed for Record at the request of Lowell Stanley Wheeler
JUL 23 1949
at minutes past 11 o'clock A.M.
Volume 8 of Official Records
Page 11, Records of Inyo County,
Calif.
Richard T. Tyler
County Recorder
By Nellie Tyler
Deputy
Fee $1.00
Recorded Indexed 15 8

Order No. .....

When recorded, please mail this Instrument to

Lowell Stanley Wheeler
Box 8

Quitclaim Deed

This Indenture *made the* fourth *day of*

one thousand nine hundred and forty nine

Between B.J.Miche- Peggy Miche, and [redacted]
Elzo D. Smith- Sally M. Smith

the part ies *of the first part,*

and

Jerrell S. Wisdom *the party of the second part,*

Witnesseth: *That the said part* ies *of the first part, in consideration of the sum of*

two hundred ($ 200.00) *dollars,*

lawful money of the United States of America, to paid *in hand paid by the*

part y *of the second part, the receipt whereof is hereby acknowledged, do hereby release and forever QUITCLAIM unto the part* y *of the second part, and to* his

heirs and assigns, all that certain lot, piece, or parcel of land situate in the

Black Canyon Mining district *County of* Inyo ,

State of California *, and bounded and described as follows, to-wit:*

Chalcedony Mining Claim No. I
Chalcedony Mining Claim No. 2
These Mining Claims being recorded in the County Recorders office at Independence, California

Together *with the tenements, hereditaments, and appurtenances thereunto belonging or appertaining, and the reversion and reversions, remainder and remainders, rents, issues, and profits thereof.*

To Have and to Hold *the said premises, together with the appurtenances, unto the part* y *of the second part, and to* his *heirs and assigns forever.*

In Witness Whereof *the part* ies *of the first part* have *executed this conveyance the day and year first above written.*

Signed and Delivered in the Presence of

Sally M. Smith
Elzo D. Smith
B. J. Miche
Peggy Miche
[redacted]

Quitclaim Deed

183

Dated ....., 19....

~~Recorded at the Request of~~
Filed for Record at the request of
Jess Wisdom
Aug. 24, 1949
at 5 min. past 9 o'clock A.M.,
in Volume 80 of
Official Records
page 229
Indexed
County Records.
Compared
Richard T. Ogden
Recorder
By Nellie Fries
Deputy Recorder

Big Pine, Cal. 1.80 pd.

State of California,
County of Inyo } ss.

On this 4 day of August in the year of our Lord one thousand nine hundred and 49 before me, Edythmay Meadowcroft a Notary Public in and for the said County of Inyo, State of California, residing therein, duly commissioned and sworn, personally appeared B. J. Murphy and Peggy Murphy

known to me to be the person described in and whose names are subscribed to the within instrument, and acknowledged to me that they executed the same.

In Witness Whereof I have hereunto set my hand and affixed my official seal in said County of Inyo the day and year in this certificate first above written.

Edythmay Meadowcroft
Notary Public in and for the
County of Inyo, State of California.
My commission expires Nov. 21, 1952

Form MF-103
(April 1951)

DEPARTMENT OF THE INTERIOR
DEFENSE MINERALS ADMINISTRATION

Budget Bureau No. 42-R1035.
Approval expires 6-30-51.

APPLICATION FOR AID FOR AN EXPLORATION PROJECT PURSUANT TO MINERAL ORDER 5, UNDER DEFENSE PRODUCTION ACT OF 1950

DO NOT FILL IN THIS BLOCK

Docket No. DMA 1139 X

Date received 7-16-51

Participation

Name and address of applicant

Jewell S. Wisdom
14631 Sherman Way
Van Nuys Calif.

Date July 5, 1951

FILL IN THIS BLOCK

Date of application Mar 15, 1951

Estimated cost $10,000

Mineral or metal ZINC-LEAD-COPPER,

Percentage of Government participation 50%

Location of mine 30 Mi W. of LIDA NEV.
18 Mi E. of OASIS CALIF.

Date of filing MF-100 Mar 15, 1951

DMA Docket Number, if available 1139-X

DEPARTMENT
Defense Min
JUL 16 1951

INSTRUCTIONS

Read Mineral Order 5, Regulations Governing Government Aid in Defense Projects, before completing this application. Submit four signed copies of the application to Defense Minerals Administration, Department of the Interior, Washington 25, D. C., or to the nearest field executive officer thereof, with your name and address on each sheet of the application and all accompanying papers. If any question is inapplicable, or if you cannot answer it, so state on the form. Where the space provided for answer is insufficient, answer on a separate sheet, annex it to the application form, and refer to it in space for answer. If the application is approved, you will be presented with an exploration project contract on Form MF-200, for your signature.

THE APPLICANT

*1. Is applicant an individual, partnership, or corporation? INDIVIDUAL

*2. If a partnership, state names and addresses of partners.

*3. If a corporation, state names and addresses of officers, directors, and five largest stockholders.

*4. Describe the mining and general business experience of (*a*) the applicant, and (*b*) the person or persons who will manage the project. 6 yrs, 2 yrs GEOLOGY - 1 yr. METAL MINING COURSE

*5. Are you the owner or the lessee of the property? OWNER

6. If owner, state what claims, liens, or encumbrances, if any, are against the property. NONE

7. If lessee, attach a copy of the lease and state if it is in good standing. NONE

NOTE.—It will be necessary to procure and attach to the exploration project contract agreements of claimants, lienors, encumbrances and lessors subordinating their interests in the property to the interest of the Government under the contract. NONE

8. Furnish current financial statement, showing assets and liabilities, and a profit and loss statement. 2,900 Spent 50,000 one in Sight

9. How much money is applicant prepared to invest in proposed project? Is it sufficient to pay your part of the cost of the project as detailed in question 23 of this application form, in accordance with the regulations on Government participation (Section 9 of Mineral Order 5)? I will finance 90 Days & can pay my part

*If you have already answered these questions on MF-100, you are not required to answer the questions for this application.

16—64067-1

THE PROPERTY

10. (*a*) Give a description of the real property that will be in any way involved in the exploration project, including any existing mine or operating property. NONE

(*b*) Give the legal description of the exact parcel, plot, or area upon which the exploration is to be conducted. AS DESCRIBED

NOTE.—If both areas are the same, so state. The only obligation to repay the Government is from the net earnings from any commercial discovery made in the area specified in (*b*) above in which the exploration is to be conducted, and the expenditure of funds which may be charged as costs of the project must be limited to that area or to work necessary to perform the exploration in that area. OK!

*11. State the present and former names of the property, if any. MM. HONOR CLAIMS - LAST CHANCE - HARD LUCK

*12. State, in detail, the location of the property with reference to towns, railroads, roads, shipping points, including distances and directions and kinds and conditions of roads. 70 MI. FROM S.P. RAILROAD - RD. GOOD, 300 MI FROM SMELTER

*13. State source and quantity of water available for operations and its sufficiency at all seasons. 9 MINERS INCHES
State amount of power to be used, rate per hour or other cost, and source. GAS & OIL 500 DAY

*14. Describe any existing useable facilities, equipment, buildings, or structure now on the property that will be devoted to the exploration work. NONE BUT I'LL PUT ALL MY EQUIPMENT ECT. ON SAME

15. State in detail how the ore could be shipped and how and where milled. ON PROPERTY - SHIP U.S. SMELTING SALT LAKE

*16. History:

(*a*) Give a statement, as complete as possible, of previous exploration, development, operation, and production of property, with reasons for any past suspensions of operations. AS DESCRIBED

(*b*) State briefly the known history and production of adjoining and neighboring properties. SILVER PEAK - NEV. MINE CALIF.

(*c*) Furnish any available (private) reports that may apply to this application, including results of mine examinations, recommended exploration and development, and metallurgical investigations. NONE BUT MY OWN

*17. Production:

(*a*) If mine is in production, furnish the following information:

	Tons per day	*Grade or analysis*	*Cost per ton*	*Net value per ton*
(1) Mining				
(2) Milling				
(3) Shipped or sold				

NONE!

*18. Ore or mineral reserves: (If property is or has been operating.) NONE

(*a*) Describe the ore or mineral deposits briefly. 30' CURRCITE 30' DEEP 500' LONG

(*b*) Submit available maps and assay data. WILL FORWARD DR. SIMM HAS. EM.

(*c*) Give estimated tonnage and grade of each class of ore reserves. 1000 T. CURRUSCITE 10% SULPHIDE

19. State any conditions or circumstances regarding the property not sufficiently brought out by the foregoing questions.

THE EXPLORATION

20. For what mineral or minerals and for what types of deposits and ores will the exploration be conducted? VANADINITE

21. Describe briefly, but concisely, the proposed work and the estimated time required to complete it. 6 MO.

NOTE.—The Government will not participate in a project that will require more than 2 years to complete. OK.

22. Furnish statement of the geological basis of the project with particular emphasis on factors leading the operator to expect the finding of commercial ore bodies. This statement should be accompanied by supporting maps such as geological maps, maps of the proposed openings and assay maps, sample lists, and other pertinent data. NONE.

THE REQUIREMENTS AND COSTS

23. Tabulate in the form of an itemized statement with a sum for each item the estimated requirements and costs of the project so that the total will give the estimated cost of the project in which the Government will participate, as follows:

(*a*) Labor, by numbers and classes (miners, muckers, millmen, etc.), with wages of each. 1 MINER 1 - MILLMAN MYSELF.

(*b*) Supervisors, by numbers and positions, with salaries of each.

(*c*) Cost of necessary repairs to existing facilities, structures, and buildings. NONE

(*d*) Cost of necessary installation or construction of additional facilities, structures, and buildings. NONE

(*e*) Cost of items of equipment, not now owned by the applicant which must be purchased for operations at a cost of $50 or more each. 3000.00 FOR MILL

(*f*) Cost of rental for equipment which the operator proposes to rent. NONE

(*g*) Rental value of items of equipment which the operator now owns and which will be devoted to the work. 90.00 PR. DAY

(*h*) Cost of materials and supplies, including items of equipment costing less than $50 each. 5.00 PR. DAY

(*i*) Cost of power, water, utilities, and any other items not provided for above. 5.00 PR. DAY

24. Furnish a time schedule of the project, stated in terms of months after project is approved, showing progress expected to be accomplished and the money expected to be spent. I WILL FINANCE 90 DAYS TO PROVE ORE BODY

CERTIFICATION

The undersigned company, and the official executing this certification on its behalf, hereby certify that the information contained in this form and accompanying papers is correct and complete to the best of their knowledge and belief.

Bonanza Mining Co. (Name of company) By Jerrold S. Wisdom (Signature of authorized official)

July 5, 1951 (Date) Owner (Title)

Title 18, U. S. Code (Crimes), Section 1001, makes it a criminal offense to make a willfully false statement or representation to any department or agency of the United States as to any matter within its jurisdiction.

*Same as footnote on page 1.

c16—64067-1 U. S. GOVERNMENT PRINTING OFFICE

Form MF-103
(April 1951)

U. S. DEPARTMENT OF THE INTERIOR
DEFENSE MINERALS ADMINISTRATION

Budget Bureau No. 42-R1035.
Approval expires 6-30-51.

APPLICATION FOR AID FOR AN EXPLORATION PROJECT PURSUANT TO MINERAL ORDER 5, UNDER DEFENSE PRODUCTION ACT OF 1950

DO NOT FILL IN THIS BLOCK

Docket No. Dma-1139 X

Date received 5/8/51

Participation

Clyde A. Ramin
8021½ Sepulveda Blvd
Van Nuys, Calif.

Jewell S. Wisdom
14631 Sherman Way
Van Nuys Calif

Name and address of applicant

Date 4-22-51

FILL IN THIS BLOCK

Date of application Copper 2-15-51 Estimated cost ~~5000.00~~ 8220.00

Mineral or metal LEAD-SILVER-ZINC-Copper Percentage of Government participation 50 %

Location of mine BLACK CANYON MINING DIST. CALIF.

Date of filing MF-100 2-15-51 DMA Docket Number, if available Dma-1139 X NONE

INSTRUCTIONS

Read Mineral Order 5, Regulations Governing Government Aid in Defense Projects, before completing this application. Submit four signed copies of the application to Defense Minerals Administration, Department of the Interior, Washington 25, D. C., or to the nearest field executive officer thereof, with your name and address on each sheet of the application and all accompanying papers. If any question is inapplicable, or if you cannot answer it, so state on the form. Where the space provided for answer is insufficient, answer on a separate sheet, annex it to the application form, and refer to it in space for answer. If the application is approved, you will be presented with an exploration project contract on Form MF-200, for your signature.

THE APPLICANT

*1. Is applicant an individual, partnership, or corporation?
*2. If a partnership, state names and addresses of partners.
*3. If a corporation, state names and addresses of officers, directors, and five largest stockholders.
*4. Describe the mining and general business experience of (*a*) the applicant, and (*b*) the person or persons who will manage the project.
*5. Are you the owner or the lessee of the property?
6. If owner, state what claims, liens, or encumbrances, if any, are against the property.
7. If lessee, attach a copy of the lease and state if it is in good standing.

NOTE.—It will be necessary to procure and attach to the exploration project contract agreements of claimants, lienors, encumbrances and lessors subordinating their interests in the property to the interest of the Government under the contract.

8. Furnish current financial statement, showing assets and liabilities, and a profit and loss statement.
9. How much money is applicant prepared to invest in proposed project? Is it sufficient to pay your part of the cost of the project as detailed in question 23 of this application form, in accordance with the regulations on Government participation (Section 9 of Mineral Order 5)?

*If you have already answered these questions on MF-100, you are not required to answer the questions for this application.

16—64067-1

THE PROPERTY

10. (*a*) Give a description of the real property that will be in any way involved in the exploration project, including any existing mine or operating property.
    (*b*) Give the legal description of the exact parcel, plot, or area upon which the exploration is to be conducted.

    NOTE.—If both areas are the same, so state. The only obligation to repay the Government is from the net earnings from any commercial discovery made in the area specified in (*b*) above in which the exploration is to be conducted, and the expenditure of funds which may be charged as costs of the project must be limited to that area or to work necessary to perform the exploration in that area.

*11. State the present and former names of the property, if any.
*12. State, in detail, the location of the property with reference to towns, railroads, roads, shipping points, including distances and directions and kinds and conditions of roads.
*13. State source and quantity of water available for operations and its sufficiency at all seasons.
State amount of power to be used, rate per hour or other cost, and source.
*14. Describe any existing useable facilities, equipment, buildings, or structure now on the property that will be devoted to the exploration work.
15. State in detail how the ore could be shipped and how and where milled.
*16. History:
    (*a*) Give a statement, as complete as possible, of previous exploration, development, operation, and production of property, with reasons for any past suspensions of operations.
    (*b*) State briefly the known history and production of adjoining and neighboring properties.
    (*c*) Furnish any available (private) reports that may apply to this application, including results of mine examinations, recommended exploration and development, and metallurgical investigations.
*17. Production:
    (*a*) If mine is in production, furnish the following information:

	Tons per day	*Grade or analysis*	*Cost per ton*	*Net value per ton*
(1) Mining				
(2) Milling				
(3) Shipped or sold				

*18. Ore or mineral reserves: (If property is or has been operating.)
    (*a*) Describe the ore or mineral deposits briefly.
    (*b*) Submit available maps and assay data.
    (*c*) Give estimated tonnage and grade of each class of ore reserves.
19. State any conditions or circumstances regarding the property not sufficiently brought out by the foregoing questions.

THE EXPLORATION

20. For what mineral or minerals and for what types of deposits and ores will the exploration be conducted?
21. Describe briefly, but concisely, the proposed work and the estimated time required to complete it.

    NOTE.—The Government will not participate in a project that will require more than 2 years to complete.
22. Furnish statement of the geological basis of the project with particular emphasis on factors leading the operator to expect the finding of commercial ore bodies. This statement should be accompanied by supporting maps such as geological maps, maps of the proposed openings and assay maps, sample lists, and other pertinent data.

THE REQUIREMENTS AND COSTS

23. Tabulate in the form of an itemized statement with a sum for each item the estimated requirements and costs of the project so that the total will give the estimated cost of the project in which the Government will participate, as follows:
    (*a*) Labor, by numbers and classes (miners, muckers, millmen, etc.), with wages of each.
    (*b*) Supervisors, by numbers and positions, with salaries of each.
    (*c*) Cost of necessary repairs to existing facilities, structures, and buildings.
    (*d*) Cost of necessary installation or construction of additional facilities, structures, and buildings.
    (*e*) Cost of items of equipment, not now owned by the applicant which must be purchased for operations at a cost of $50 or more each.
    (*f*) Cost of rental for equipment which the operator proposes to rent.
    (*g*) Rental value of items of equipment which the operator now owns and which will be devoted to the work.
    (*h*) Cost of materials and supplies, including items of equipment costing less than $50 each.
    (*i*) Cost of power, water, utilities, and any other items not provided for above.
24. Furnish a time schedule of the project, stated in terms of months after project is approved, showing progress expected to be accomplished and the money expected to be spent.

CERTIFICATION

The undersigned company, and the official executing this certification on its behalf, hereby certify that the information contained in this form and accompanying papers is correct and complete to the best of their knowledge and belief.

J. S. Woodson + CLYDE RANIN By Jerrell S. Woodson
(Name of company) (Signature of authorized official)

4-22-51 Owner
(Date) (Title)

Title 18, U. S. Code (Crimes), Section 1001, makes it a criminal offense to make a willfully false statement or representation to any department or agency of the United States as to any matter within its jurisdiction.

*Same as footnote on page 1.

16—64067-1 U. S. GOVERNMENT PRINTING OFFICE

Form MF-103
(April 1951)

U. S. DEPARTMENT OF THE INTERIOR
DEFENSE MINERALS ADMINISTRATION

Budget Bureau No. 42-R1035.
Approval expires 6-30-51.

APPLICATION FOR AID FOR AN EXPLORATION PROJECT PURSUANT TO MINERAL ORDER 5, UNDER DEFENSE PRODUCTION ACT OF 1950

DO NOT FILL IN THIS BLOCK

Docket No. Dma-1139 X

Date received 5/8/51

Participation

Jarrell S. Wisdom 14631 Sherman Way Van Nuys Calif.
Clyde H. Parmin 8021½ Sepulveda Blvd Van Nuys Calif.

Jarrell S. Wisdom
14631 Sherman Way
Van Nuys, Calif.

Name and address of applicant

Date 4-22-51

FILL IN THIS BLOCK

Date of application appot. Feb. 15, 1951 Estimated cost $8000.00

Mineral or metal Lead-Silver-Zinc-Copper Percentage of Government participation 50%

Location of mine BLACK CANYON MINING DIST.
INYO CO. CALIF.

Date of filing MF-100 appix Feb. 15, 1951 DMA Docket Number, if available NONE

Dma-1139 X

INSTRUCTIONS

Read Mineral Order 5, Regulations Governing Government Aid in Defense Projects, before completing this application. Submit four signed copies of the application to Defense Minerals Administration, Department of the Interior, Washington 25, D. C., or to the nearest field executive officer thereof, with your name and address on each sheet of the application and all accompanying papers. If any question is inapplicable, or if you cannot answer it, so state on the form. Where the space provided for answer is insufficient, answer on a separate sheet, annex it to the application form, and refer to it in space for answer. If the application is approved, you will be presented with an exploration project contract on Form MF-200, for your signature.

THE APPLICANT

*1. Is applicant an individual, partnership, or corporation? PARTNERSHIP 60/40%.
*2. If a partnership, state names and addresses of partners. AS LISTED ABOVE.
*3. If a corporation, state names and addresses of officers, directors, and five largest stockholders. NONE
*4. Describe the mining and general business experience of (a) the applicant, and (b) the person or persons who will manage the project. SAME
*5. Are you the owner or the lessee of the property? YES.
6. If owner, state what claims, liens, or encumbrances, if any, are against the property. NONE
7. If lessee, attach a copy of the lease and state if it is in good standing. BUSTERS #1-2-3

NOTE.—It will be necessary to procure and attach to the exploration project contract agreements of claimants, lienors, encumbrances and lessors subordinating their interests in the property to the interest of the Government under the contract. NONE

8. Furnish current financial statement, showing assets and liabilities, and a profit and loss statement. ATTACHED
9. How much money is applicant prepared to invest in proposed project? Is it sufficient to pay your part of the cost of the project as detailed in question 23 of this application form, in accordance with the regulations on Government participation (Section 9 of Mineral Order 5)? appix $1000.00 — cash - Labor, Use of Equipment

*If you have already answered these questions on MF-100, you are not required to answer the questions for this application.

16—64067-1

Dma-1139 (Cont.)

856

THE PROPERTY

10. (*a*) Give a description of the real property that will be in any way involved in the exploration project, including any existing mine or operating property. ATTACHED - SEPERATE

(*b*) Give the legal description of the exact parcel, plot, or area upon which the exploration is to be conducted. ATT'C

NOTE.—If both areas are the same, so state. The only obligation to repay the Government is from the net earnings from any commercial discovery made in the area specified in (*b*) above in which the exploration is to be conducted, and the expenditure of funds which may be charged as costs of the project must be limited to that area or to work necessary to perform the exploration in that area. ATT'C

*11. State the present and former names of the property, if any. ATT'C

*12. State, in detail, the location of the property with reference to towns, railroads, roads, shipping points, including distances and directions and kinds and conditions of roads. ATT'C

*13. State source and quantity of water available for operations and its sufficiency at all seasons. ATT'C State amount of power to be used, rate per hour or other cost, and source. ATT'C

*14. Describe any existing useable facilities, equipment, buildings, or structure now on the property that will be devoted to the exploration work. DIST ATT'C

15. State in detail how the ore could be shipped and how and where milled. ATT'C

*16. History:

(*a*) Give a statement, as complete as possible, of previous exploration, development, operation, and production of property, with reasons for any past suspensions of operations. ATT'C

(*b*) State briefly the known history and production of adjoining and neighboring properties. ATT'C

(*c*) Furnish any available (private) reports that may apply to this application, including results of mine examinations, recommended exploration and development, and metallurgical investigations. ATT'C

*17. Production:

(*a*) If mine is in production, furnish the following information:

	Tons per day	*Grade or analysis*	*Cost per ton*	*Net value per ton*
(1) Mining				
(2) Milling				
(3) Shipped or sold				

ATT'C

*18. Ore or mineral reserves: (If property is or has been operating.)

(*a*) Describe the ore or mineral deposits briefly. ATT'C

(*b*) Submit available maps and assay data. ATT'C

(*c*) Give estimated tonnage and grade of each class of ore reserves.

19. State any conditions or circumstances regarding the property not sufficiently brought out by the foregoing questions. ATT'C

THE EXPLORATION

20. For what mineral or minerals and for what types of deposits and ores will the exploration be conducted? A'TT'C

21. Describe briefly, but concisely, the proposed work and the estimated time required to complete it. A'TT'C

NOTE.—The Government will not participate in a project that will require more than 2 years to complete.

22. Furnish statement of the geological basis of the project with particular emphasis on factors leading the operator to expect the finding of commercial ore bodies. This statement should be accompanied by supporting maps such as geological maps, maps of the proposed openings and assay maps, sample lists, and other pertinent data.

THE REQUIREMENTS AND COSTS

23. Tabulate in the form of an itemized statement with a sum for each item the estimated requirements and costs of the project so that the total will give the estimated cost of the project in which the Government will participate, as follows:

(*a*) Labor, by numbers and classes (miners, muckers, millmen, etc.), with wages of each.

(*b*) Supervisors, by numbers and positions, with salaries of each.

(*c*) Cost of necessary repairs to existing facilities, structures, and buildings.

(*d*) Cost of necessary installation or construction of additional facilities, structures, and buildings.

(*e*) Cost of items of equipment, not now owned by the applicant which must be purchased for operations at a cost of $50 or more each.

(*f*) Cost of rental for equipment which the operator proposes to rent.

(*g*) Rental value of items of equipment which the operator now owns and which will be devoted to the work.

(*h*) Cost of materials and supplies, including items of equipment costing less than $50 each.

(*i*) Cost of power, water, utilities, and any other items not provided for above.

24. Furnish a time schedule of the project, stated in terms of months after project is approved, showing progress expected to be accomplished and the money expected to be spent.

CERTIFICATION

The undersigned company, and the official executing this certification on its behalf, hereby certify that the information contained in this form and accompanying papers is correct and complete to the best of their knowledge and belief.

J. S. Wisdom + RLYDE H. RAMIN
(Name of company) (Signature of authorized official)

4-22-51
(Date) (Title)

Title 18, U. S. Code (Crimes), Section 1001, makes it a criminal offense to make a willfully false statement or representation to any department or agency of the United States as to any matter within its jurisdiction.

*Same as footnote on page 1.

16—64067-1 U. S. GOVERNMENT PRINTING

Form MF-103
(April 1951)

U. S. DEPARTMENT OF THE INTERIOR
DEFENSE MINERALS ADMINISTRATION

Budget Bureau No. 42-R1035.
Approval expires 6-30-51.

APPLICATION FOR AID FOR AN EXPLORATION PROJECT PURSUANT TO MINERAL ORDER 5, UNDER DEFENSE PRODUCTION ACT OF 1950

DO NOT FILL IN THIS BLOCK

Docket No. dma-1139X

Date received 5/8/51

Participation

Jarrell S. Wisdom 14631 Sherman Way Van Nuys Calif
Clyde A. Ronnie 8021½ Sepulveda Blvd Van Nuys Calif.

Jarrell S. Wisdom
14631 Sherman Way
Van Nuys Calif

Name and address of applicant

Date 4-22-51

FILL IN THIS BLOCK

Date of application approx Feb 15, 1951 Estimated cost 8,220.00 ~~5000.00~~

Mineral or metal LEAD-ZINC-Copper-SILVER Percentage of Government participation 50%

Location of mine BLACK CANYON MINING DIST.
INYO CO. CALIF.

Date of filing MF-100 APPROX 2-15-1951 DMA Docket Number, if available dma-1139X NONE

INSTRUCTIONS

Read Mineral Order 5, Regulations Governing Government Aid in Defense Projects, before completing this application. Submit four signed copies of the application to Defense Minerals Administration, Department of the Interior, Washington 25, D. C., or to the nearest field executive officer thereof, with your name and address on each sheet of the application and all accompanying papers. If any question is inapplicable, or if you cannot answer it, so state on the form. Where the space provided for answer is insufficient, answer on a separate sheet, annex it to the application form, and refer to it in space for answer. If the application is approved, you will be presented with an exploration project contract on Form MF-200, for your signature.

THE APPLICANT

*1. Is applicant an individual, partnership, or corporation?
*2. If a partnership, state names and addresses of partners.
*3. If a corporation, state names and addresses of officers, directors, and five largest stockholders.
*4. Describe the mining and general business experience of (*a*) the applicant, and (*b*) the person or persons who will manage the project.
*5. Are you the owner or the lessee of the property?
6. If owner, state what claims, liens, or encumbrances, if any, are against the property.
7. If lessee, attach a copy of the lease and state if it is in good standing.

NOTE.—It will be necessary to procure and attach to the exploration project contract agreements of claimants, lienors, encumbrances and lessors subordinating their interests in the property to the interest of the Government under the contract.

8. Furnish current financial statement, showing assets and liabilities, and a profit and loss statement.
9. How much money is applicant prepared to invest in proposed project? Is it sufficient to pay your part of the cost of the project as detailed in question 23 of this application form, in accordance with the regulations on Government participation (Section 9 of Mineral Order 5)?

*If you have already answered these questions on MF-100, you are not required to answer the questions for this application.

16—64067-1

THE PROPERTY

10. (a) Give scription of the real property that will be in any way involved in the exploration project, including any existing mine perating property.

(b) Give egal description of the exact parcel, plot, or area upon which the exploration is to be conducted.

NOTE f both areas are the same, so state. The only obligation to repay the Government is from the net earnings from ny commercial discovery made in the area specified in (b) above in which the exploration is to be conducted, d the expenditure of funds which may be charged as costs of the project must be limited to that area or to rk necessary to perform the exploration in that area.

*11. State the pre t and former names of the property, if any.

*12. State, in deta he location of the property with reference to towns, railroads, roads, shipping points, including distances and directions d kinds and conditions of roads.

*13. State source a uantity of water available for operations and its sufficiency at all seasons. State amount o ower to be used, rate per hour or other cost, and source.

*14. Describe any e ing useable facilities, equipment, buildings, or structure now on the property that will be devoted to the exploration wor

15. State in detail ho the ore could be shipped and how and where milled.

*16. History:

(a) Give a staten t, as complete as possible, of previous exploration, development, operation, and production of property, with reasons r any past suspensions of operations.

(b) State briefly t known history and production of adjoining and neighboring properties.

(c) Furnish any a ilable (private) reports that may apply to this application, including results of mine examinations, recommended e loration and development, and metallurgical investigations.

*17. Production:

(a) If mine is in pro uction, furnish the following information:

NONE

	Tons per day	Grade or analysis	Cost per ton	Net value per ton
(1) Mining	—	SNIPING	-HIGH	-GRADING — 20 lbs
(2) Milling				
(3) Shipped or sold				

*18. Ore or mineral reserves: (If property is or has been operating.)

(a) Describe the ore or mineral deposits briefly.

(b) Submit available maps and assay data.

(c) Give estimated tonnage and grade of each class of ore reserves.

19. State any conditions or circumstances regarding the property not sufficiently brought out by the foregoing questions.

THE EXPLORATION

20. For what mineral or minerals and for what types of deposits and ores will the exploration be conducted?

21. Describe briefly, but concisely, the proposed work and the estimated time required to complete it.

NOTE.—The Government will not participate in a project that will require more than 2 years to complete.

22. Furnish statement of the geological basis of the project with particular emphasis on factors leading the operator to expect the finding of commercial ore bodies. This statement should be accompanied by supporting maps such as geological maps, maps of the proposed openings and assay maps, sample lists, and other pertinent data.

THE REQUIREMENTS AND COSTS

23. Tabulate in the form of an itemized statement with a sum for each item the estimated requirements and costs of the project so that the total will give the estimated cost of the project in which the Government will participate, as follows:

(a) Labor, by numbers and classes (miners, muckers, millmen, etc.), with wages of each.

(b) Supervisors, by numbers and positions, with salaries of each.

(c) Cost of necessary repairs to existing facilities, structures, and buildings.

(d) Cost of necessary installation or construction of additional facilities, structures, and buildings.

(e) Cost of items of equipment, not now owned by the applicant which must be purchased for operations at a cost of $50 or more each.

(f) Cost of rental for equipment which the operator proposes to rent.

(g) Rental value of items of equipment which the operator now owns and which will be devoted to the work.

(h) Cost of materials and supplies, including items of equipment costing less than $50 each.

(i) Cost of power, water, utilities, and any other items not provided for above.

24. Furnish a time schedule of the project, stated in terms of months after project is approved, showing progress expected to be accomplished and the money expected to be spent.

CERTIFICATION

The undersigned company, and the official executing this certification on its behalf, hereby certify that the information contained in this form and accompanying papers is correct and complete to the best of their knowledge and belief.

Jarrell S. Wisdom (Name of company)

By J. S. Wisdom (Signature of authorized official)

4-22-51 (Date)

Owner (Title)

Title 18, U. S. Code (Crimes), Section 1001, makes it a criminal offense to make a willfully false statement or representation to any department or agency of the United States as to any matter within its jurisdiction.

*Same as footnote on page 1.

16—64067-1 U. S. GOVERNMENT PRINTING OFFICE

Form MF-103
(April 1951)

U. S. DEPARTMENT OF THE INTERIOR
DEFENSE MINERALS ADMINISTRATION

Budget Bureau No. 42-R1035.
Approval expires 6-30-51.

APPLICATION FOR AID FOR AN EXPLORATION PROJECT PURSUANT TO MINERAL ORDER 5, UNDER DEFENSE PRODUCTION ACT OF 1950

DO NOT FILL IN THIS BLOCK

Docket No. DMA - 1139 X

Date received 5/8/51

Participation

Jewell S. Wisdom
14431 Sherman Way
Van Nuys, Calif.

Clyde C. Ramer
8021½ Sepulveda Blvd.
Van Nuys, Calif.

Name and address of applicant

Date 4-22-51

FILL IN THIS BLOCK

Date of application ~~Appox Feb. 15, 1951~~

Estimated cost ~~5000.00~~ $8220.00

Mineral or metal Zinc, copper, lead

Percentage of Government participation 50%

Location of mine Black Canyon Mining Dist
Big Pine, Calif. appox 12 mi N.E. of Big Pine, Calif.

Date of filing MF-100 Feb 1951

DMA Docket Number, if available DMA - 1139 X none

INSTRUCTIONS

Read Mineral Order 5, Regulations Governing Government Aid in Defense Projects, before completing this application. Submit four signed copies of the application to Defense Minerals Administration, Department of the Interior, Washington 25, D. C., or to the nearest field executive officer thereof, with your name and address on each sheet of the application and all accompanying papers. If any question is inapplicable, or if you cannot answer it, so state on the form. Where the space provided for answer is insufficient, answer on a separate sheet, annex it to the application form, and refer to it in space for answer. If the application is approved, you will be presented with an exploration project contract on Form MF-200, for your signature.

THE APPLICANT

*1. Is applicant an individual, partnership, or corporation? Partnership 60-40%.

*2. If a partnership, state names and addresses of partners. as above.

*3. If a corporation, state names and addresses of officers, directors, and five largest stockholders. none

*4. Describe the mining and general business experience of (*a*) the applicant, and (*b*) the person or persons who will manage the project. J.S.W. 4 yrs. Red Ramer 12 yrs.

*5. Are you the owner or the lessee of the property? Owner + lessee on 1 property

6. If owner, state what claims, liens, or encumbrances, if any, are against the property. none

7. If lessee, attach a copy of the lease and state if it is in good standing. Enclosed

NOTE.—It will be necessary to procure and attach to the exploration project contract agreements of claimants, lienors, encumbrances and lessors subordinating their interests in the property to the interest of the Government under the contract. Enclosed

8. Furnish current financial statement, showing assets and liabilities, and a profit and loss statement. Enclosed

9. How much money is applicant prepared to invest in proposed project? Is it sufficient to pay your part of the cost of the project as detailed in question 23 of this application form, in accordance with the regulations on Government participation (Section 9 of Mineral Order 5)? Yes as stated on page 10.

*If you have already answered these questions on MF-100, you are not required to answer the questions for this application.

16—64067-1

THE PROPERTY

10. (*a*) Give a description of the real property that will be in any way involved in the exploration project, including any existing mine or operating property. attached

(*b*) Give the legal description of the exact parcel, plot, or area upon which the exploration is to be conducted. attached

NOTE.—If both areas are the same, so state. The only obligation to repay the Government is from the net earnings from any commercial discovery made in the area specified in (*b*) above in which the exploration is to be conducted, and the expenditure of funds which may be charged as costs of the project must be limited to that area or to work necessary to perform the exploration in that area.

*11. State the present and former names of the property, if any.

*12. State, in detail, the location of the property with reference to towns, railroads, roads, shipping points, including distances and directions and kinds and conditions of roads.

*13. State source and quantity of water available for operations and its sufficiency at all seasons.
State amount of power to be used, rate per hour or other cost, and source.

*14. Describe any existing useable facilities, equipment, buildings, or structure now on the property that will be devoted to the exploration work.

15. State in detail how the ore could be shipped and how and where milled.

*16. History:

(*a*) Give a statement, as complete as possible, of previous exploration, development, operation, and production of property, with reasons for any past suspensions of operations.

(*b*) State briefly the known history and production of adjoining and neighboring properties.

(*c*) Furnish any available (private) reports that may apply to this application, including results of mine examinations, recommended exploration and development, and metallurgical investigations.

*17. Production:

(*a*) If mine is in production, furnish the following information:

	Tons per day	*Grade or analysis*	*Cost per ton*	*Net value per ton*
(1) Mining				
(2) Milling				
(3) Shipped or sold				

all information on letter form —

*18. Ore or mineral reserves: (If property is or has been operating.)

(*a*) Describe the ore or mineral deposits briefly.

(*b*) Submit available maps and assay data.

(*c*) Give estimated tonnage and grade of each class of ore reserves.

19. State any conditions or circumstances regarding the property not sufficiently brought out by the foregoing questions.

THE EXPLORATION

20. For what mineral or minerals and for what types of deposits and ores will the exploration be conducted?

21. Describe briefly, but concisely, the proposed work and the estimated time required to complete it.

NOTE.—The Government will not participate in a project that will require more than 2 years to complete.

22. Furnish statement of the geological basis of the project with particular emphasis on factors leading the operator to expect the finding of commercial ore bodies. This statement should be accompanied by supporting maps such as geological maps, maps of the proposed openings and assay maps, sample lists, and other pertinent data.

THE REQUIREMENTS AND COSTS

23. Tabulate in the form of an itemized statement with a sum for each item the estimated requirements and costs of the project so that the total will give the estimated cost of the project in which the Government will participate, as follows:

(*a*) Labor, by numbers and classes (miners, muckers, millmen, etc.), with wages of each.

(*b*) Supervisors, by numbers and positions, with salaries of each.

(*c*) Cost of necessary repairs to existing facilities, structures, and buildings.

(*d*) Cost of necessary installation or construction of additional facilities, structures, and buildings.

(*e*) Cost of items of equipment, not now owned by the applicant which must be purchased for operations at a cost of $50 or more each.

(*f*) Cost of rental for equipment which the operator proposes to rent.

(*g*) Rental value of items of equipment which the operator now owns and which will be devoted to the work.

(*h*) Cost of materials and supplies, including items of equipment costing less than $50 each.

(*i*) Cost of power, water, utilities, and any other items not provided for above.

24. Furnish a time schedule of the project, stated in terms of months after project is approved, showing progress expected to be accomplished and the money expected to be spent.

CERTIFICATION

The undersigned company, and the official executing this certification on its behalf, hereby certify that the information contained in this form and accompanying papers is correct and complete to the best of their knowledge and belief.

Gunnell Mining Co. (Name of company)

By Jennell S. Windom (Signature of authorized official)

4-22-51 (Date)

Owner 60% (Title)

Title 18, U. S. Code (Crimes), Section 1001, makes it a criminal offense to make a willfully false statement or representation to any department or agency of the United States as to any matter within its jurisdiction.

*Same as footnote on page 1.

Form MF-103
(April 1951)

U. S. DEPARTMENT OF THE INTERIOR
DEFENSE MINERALS ADMINISTRATION

Budget Bureau No. 42-R1035.
Approval expires 6-30-51.

APPLICATION FOR AID FOR AN EXPLORATION PROJECT PURSUANT TO MINERAL ORDER 5, UNDER DEFENSE PRODUCTION ACT OF 1950

DO NOT FILL IN THIS BLOCK

Docket No. Dma - 1139 X

Date received 5/8/51

Participation

Clyde H. Ramin
8021½ Sepulveda Blvd
Van Nuys Calif

Jewell S. Wisdom
14431 Sherman Way
Van Nuys Calif.

Name and address of applicant

Date 4-22-51

FILL IN THIS BLOCK

Date of application appox Feb. 15, 1951 Estimated cost ~~5000.00~~ 8,220.00

Mineral or metal LEAD - SILVER ZINC - Copper Percentage of Government participation 50%

Location of mine BLACK CANYON
MINING DIST. CALIF.

Date of filing MF-100 appox Feb 15, 1951 DMA Docket Number, if available Dma - 1139 X NONE

INSTRUCTIONS

Read Mineral Order 5, Regulations Governing Government Aid in Defense Projects, before completing this application. Submit four signed copies of the application to Defense Minerals Administration, Department of the Interior, Washington 25, D. C., or to the nearest field executive officer thereof, with your name and address on each sheet of the application and all accompanying papers. If any question is inapplicable, or if you cannot answer it, so state on the form. Where the space provided for answer is insufficient, answer on a separate sheet, annex it to the application form, and refer to it in space for answer. If the application is approved, you will be presented with an exploration project contract on Form MF-200, for your signature.

THE APPLICANT

*1. Is applicant an individual, partnership, or corporation? PARTNERSHIP 60% — 40%

*2. If a partnership, state names and addresses of partners. ATT'C

*3. If a corporation, state names and addresses of officers, directors, and five largest stockholders. SAME

*4. Describe the mining and general business experience of (a) the applicant, and (b) the person or persons who will manage the project. SAME

*5. Are you the owner or the lessee of the property? OWNER + LESSEE

6. If owner, state what claims, liens, or encumbrances, if any, are against the property. NONE

7. If lessee, attach a copy of the lease and state if it is in good standing. YES

NOTE.—It will be necessary to procure and attach to the exploration project contract agreements of claimants, lienors, encumbrances and lessors subordinating their interests in the property to the interest of the Government under the contract. NONE

8. Furnish current financial statement, showing assets and liabilities, and a profit and loss statement. ATT'C

9. How much money is applicant prepared to invest in proposed project? Is it sufficient to pay your part of the cost of the project as detailed in question 23 of this application form, in accordance with the regulations on Government participation (Section 9 of Mineral Order 5)? appox 1000.00 cash - labor + use of equip.

*If you have already answered these questions on MF-100, you are not required to answer the questions for this application.

16—64067-1

THE PROPERTY

10. (*a*) Give a description of the real property that will be in any way involved in the exploration project, including any existing mine or operating property. NONE

(*b*) Give the legal description of the exact parcel, plot, or area upon which the exploration is to be conducted. ATT'C

NOTE.—If both areas are the same, so state. The only obligation to repay the Government is from the net earnings from any commercial discovery made in the area specified in (*b*) above in which the exploration is to be conducted, and the expenditure of funds which may be charged as costs of the project must be limited to that area or to work necessary to perform the exploration in that area. ATT'C

*11. State the present and former names of the property, if any. ATT'C

*12. State, in detail, the location of the property with reference to towns, railroads, roads, shipping points, including distances and directions and kinds and conditions of roads. ATT'C

*13. State source and quantity of water available for operations and its sufficiency at all seasons. ATT'C
State amount of power to be used, rate per hour or other cost, and source. ATT'C

*14. Describe any existing useable facilities, equipment, buildings, or structure now on the property that will be devoted to the exploration work. ATT'C

15. State in detail how the ore could be shipped and how and where milled. ATT'C

*16. History:

(*a*) Give a statement, as complete as possible, of previous exploration, development, operation, and production of property, with reasons for any past suspensions of operations. ATT'C

(*b*) State briefly the known history and production of adjoining and neighboring properties. ATT'C

(*c*) Furnish any available (private) reports that may apply to this application, including results of mine examinations, recommended exploration and development, and metallurgical investigations. ATT'C

*17. Production:

(*a*) If mine is in production, furnish the following information:

	Tons per day	*Grade or analysis*	*Cost per ton*	*Net value per ton*
(1) Mining				
(2) Milling				
(3) Shipped or sold				

ATT'C

*18. Ore or mineral reserves: (If property is or has been operating.) ATT'C

(*a*) Describe the ore or mineral deposits briefly.

(*b*) Submit available maps and assay data.

(*c*) Give estimated tonnage and grade of each class of ore reserves.

19. State any conditions or circumstances regarding the property not sufficiently brought out by the foregoing questions.

THE EXPLORATION

20. For what mineral or minerals and for what types of deposits and ores will the exploration be conducted?

21. Describe briefly, but concisely, the proposed work and the estimated time required to complete it.

NOTE.—The Government will not participate in a project that will require more than 2 years to complete.

22. Furnish statement of the geological basis of the project with particular emphasis on factors leading the operator to expect the finding of commercial ore bodies. This statement should be accompanied by supporting maps such as geological maps, maps of the proposed openings and assay maps, sample lists, and other pertinent data.

THE REQUIREMENTS AND COSTS

23. Tabulate in the form of an itemized statement with a sum for each item the estimated requirements and costs of the project so that the total will give the estimated cost of the project in which the Government will participate, as follows:

(*a*) Labor, by numbers and classes (miners, muckers, millmen, etc.), with wages of each.

(*b*) Supervisors, by numbers and positions, with salaries of each.

(*c*) Cost of necessary repairs to existing facilities, structures, and buildings.

(*d*) Cost of necessary installation or construction of additional facilities, structures, and buildings.

(*e*) Cost of items of equipment, not now owned by the applicant which must be purchased for operations at a cost of $50 or more each.

(*f*) Cost of rental for equipment which the operator proposes to rent.

(*g*) Rental value of items of equipment which the operator now owns and which will be devoted to the work.

(*h*) Cost of materials and supplies, including items of equipment costing less than $50 each.

(*i*) Cost of power, water, utilities, and any other items not provided for above.

24. Furnish a time schedule of the project, stated in terms of months after project is approved, showing progress expected to be accomplished and the money expected to be spent.

CERTIFICATION

The undersigned company, and the official executing this certification on its behalf, hereby certify that the information contained in this form and accompanying papers is correct and complete to the best of their knowledge and belief.

Jerrell L. Weldon + C. H. RAMIN By J. S. Weldon
(Name of company) (Signature of authorized official)

4-22-51 Owner
(Date) (Title)

Title 18, U. S. Code (Crimes), Section 1001, makes it a criminal offense to make a willfully false statement or representation to any department or agency of the United States as to any matter within its jurisdiction.

*Same as footnote on page 1.

16—64067-1 U. S. GOVERNMENT PRINTING OFFICE

MF-200
(April 1951)

Docket No. DMA 1139 X

Commodity _____

UNITED STATES OF AMERICA
DEPARTMENT OF THE INTERIOR
DEFENSE MINERALS ADMINISTRATION

EXPLORATION PROJECT CONTRACT [1]

It is agreed this 23rd day of ARRIL, 1951, between the United States of America, acting through the Department of the Interior, Defense Minerals Administration, hereinafter called the "Government," and [2] JERRELL S. WISDOM + CLYDE H. RAMIN

hereinafter called the "Operator," as follows:

1. *Authority for contract.* This agreement is entered into under the authority of the Defense Production Act of 1950, pursuant to Mineral Order 5, entitled "Regulations Governing Government Aid in Defense Exploration Projects."

2. *Operator's property rights.* The exploration project shall be conducted on that certain property situated in the State of CALIF., County of INYO described as follows: [3] CHALCODONY #1+2 ADJOINING - BUSTERS, #2-3 - AJ - GRANDVIEW'S 1-to 5. gr. 200 acres. Mineral Land Re. Smith Mining Co.

with respect to which the Operator represents and undertakes: [4]

(*a*) That he is the sole owner, in possession and entitled to possession, and that the property is subject only to the following claims, liens, or encumbrances as to each of which the subordination agreement of the holder is attached: NONE

(*b*) That he is a lessee, in possession and entitled to possession, and the subordination agreement of the lessor is attached.

3. *Exploration project.* The Operator, within _____ days from the date of this contract shall commence work on a project of exploration for [5] _____; shall prosecute the work efficiently, expertly, in a workmanlike manner, in accordance with good mining standards, with suitable and adequate equipment, materials, and labor, all properly designed to bring the project to completion within a period of [6] 90 DAYS from the date of this contract. The exploration project and the work to be performed are more fully described on Exhibit "A" attached hereto, which, with any maps or drawings thereto attached, is made a part of this contract.

4. *Performance of the work.* The work shall be performed by the Operator, under his sole direction and control: *Provided,* That with the consent of the Government and its written approval of the contract or contracts, all or any part of the work may be performed by the Operator through contract or contracts with independent contractors. The Government shall have the right to enter and observe and inspect the work at all reasonable times, and the Operator shall provide the Government with all available means for doing so. The Government may consult with and advise the Operator on all phases of the work.

5. *Fixtures and improvements.* The Operator shall devote the land and all existing improvements, facilities, buildings, installations, and appurtenances to the purposes of the exploration project without any allowance for the use, rental value, depreciation, depletion, or other cost of acquiring, owning, or holding possession thereof. Attached hereto, marked "Exhibit 'B'," is a detailed list of additional facilities, buildings, and fixtures, to be purchased, installed, or erected by the Operator, with the estimated cost of each, to which the Government will contribute its agreed pro-rata share of the cost. The difference between the cost of such additional facilities, buildings, or fixtures, and the salvage value thereof at the conclusion of the work, shall be charged as a cost of the project to which the Government has contributed its pro-rata share.

6. *Operating equipment.* Attached hereto, marked "Exhibit 'C'," is a detailed list of operating equipment divided into categories of items to be rented, purchased, or furnished by the Operator, with the allowable rental, purchase price, or rental value, as the case may be, annexed to each. As to equipment purchased for the project, the Government will contribute its agreed pro-rata share of the cost thereof, and the difference between the cost and the salvage value at the conclusion of the work shall be charged as a cost of the project to which the Government has contributed its pro-rata share.

[1] If sufficient space is not provided in any blank, use an extra sheet of paper and refer to it in the blank.
[2] State name, address, and nature of organization if any.
[3] Give legal description or enough to identify the property.
[4] Strike out the provision not applicable.
[5] Name of mineral.
[6] Not in excess of 2 years.

7. *Title to and disposition of property.* [illegible] facilities, buildings, fixtures, equipment, or other items costing more than $50 each, paid for or purchased with funds contributed jointly by the Operator and the Government, shall belong to the Operator and the Government jointly, in proportion to their respective contributions, and upon the termination of the contract, if they have any salvage value, shall be disposed of for their joint account unless the Government, in writing, waives its interest in any such items. The Government may require the dismantling, severance from land, and removal of any such items in order to realize its interest in the salvage value thereof, and the cost of any such removal and of the disposal of the items shall be for the joint account of the parties in proportion to their respective interests.

8. *Labor and supervision.* Attached hereto, marked "Exhibit 'D'," is an itemized schedule of labor, by numbers and classes (miners, muckers, millmen, etc.), and of supervisors, by numbers and positions, with the maximum wages or salaries that may be paid to each as an allowable cost of the project.

9. *Rehabilitation and repairs.* Attached hereto, marked "Exhibit 'E'," is a detailed schedule of existing facilities, buildings, installations, and fixtures, with a statement of the cost of any necessary rehabilitation or repairs to put into useful and operable condition, which cost shall be allowed as a cost of the project.

10. *Allowable costs of the project.* The allowable costs of the project in which the Government will participate are limited to the necessary, reasonable, direct costs of performing the exploration work, including the costs of materials, supplies, engineering, power, water, and utilities, including items of equipment costing less than $50 each; and the costs referred to in Articles 5, 6, 8, and 9, and the exhibits annexed to and referred to in the contract. Although the Government may pay part of the cost of new or additional facilities, structures, buildings, and equipment, only the depreciation on such items, computed as indicated in Articles 5 and 6, will be charged as a cost of the project. No items of general overhead, corporate management, interest, or any other indirect costs not expressly allowed by these regulations, or work performed or costs incurred before the date of this contract, shall be allowed as costs of the project in which the Government will participate.

11. *Participation by the Government.* At the end of the first full calendar month after the Operator has commenced work under the project, and at the end of each succeeding calendar month, the Operator shall submit to the Government a voucher for payment with a detailed statement of work done and allowable costs (as defined in Article 10 of this agreement) incurred, in a form and with supporting data acceptable to the Government. After approving the voucher, the Government shall pay to the Operator _____ percent of the sum of such costs incurred; *Provided,* That the aggregate total of all sums paid by the Government under this agreement shall not exceed $_____, which is _____ percent of the agreed estimated total cost of this project, $_____.

12. *Accounts and audits.* The Operator shall keep suitable records and accounts of operations, which the Government may inspect and audit at any time. The Government may at any time require an audit of the Operator's records and accounts by a certified public accountant, the cost thereof to be treated as a cost of the project. The Operator shall keep and preserve said records and accounts for at least 3 years after the completion of the project or the termination of this contract.

13. *Progress reports.* The Operator shall provide the Government with monthly reports of progress in form and content satisfactory to the Government, and upon the completion of the project or termination of the contract shall provide the Government with a comprehensive geologic and engineering report, including an estimate of ore reserves, to the best of his ability. Four copies of all reports shall be furnished to the Government.

14. *Repayment by Operator.* If, upon the completion of the exploration project or termination of the contract, the Government considers that a discovery or development has resulted from the work from which commercial production of ore may be made, the Government, within 6 months thereafter shall so certify to the Operator, particularly describing and delimiting its estimate of the discovery or the development. Thereafter, if and as ore is produced as a result of such discovery or development, the Operator and his successor in interest shall be and become obligated to pay to the Government a percentage royalty on the net smelter returns or other net proceeds realized from such ore, concentrates, or metal produced within ten (10) years from the date of this contract, until the total amount contributed by the Government, without interest, is fully repaid or said 10 years have elapsed, whichever occurs first, as follows:

Of net smelter returns or other net proceeds not in excess of eight dollars ($8.00) per ton of ore: One and one-half (1½) percent.

Of net smelter returns or other net proceeds in excess of eight dollars ($8.00) per ton of ore: One and one-half (1½) percent, plus one-half (½) percent additional for each full fifty cents ($0.50) in excess of eight dollars ($8.00) per ton of ore, but not in excess of a maximum of five (5) percent.

This obligation to repay from net returns or proceeds shall be and remain a claim and lien upon the property which is the subject of the exploration project and upon any production resulting from such discovery or development, in favor of the Government, until fully paid, or until said 10-year period has elapsed; and this claim and lien and the Government's right to repayment shall survive any termination of the contract, whether by completion of the exploration project or otherwise. This article is not to be construed as imposing any obligation on the Operator or his successor in interest to produce ore from any such discovery or development.

15. *No assignment of contract.* Without the written consent of the Government, the Operator shall not assign or otherwise transfer or hypothecate this contract or any rights thereunder.

16. *Termination and completion.* The Government may, at any time, by written notice to the Operator, terminate this contract: (*a*) If the Operator fails to provide his share of the money necessary to prosecute operations pursuant to the terms of the contract; (*b*) if the Operator, in the opinion of the Government, fails to prosecute operations pursuant to the terms of the contract; or (*c*) if in the opinion of the Government, operations up to the time of the notice have not indicated the probability of making any worthwhile discovery and in the opinion of the Government further operations are not justified. Upon the completion of the project or any termination of the contract the Operator shall render to the Government a full and final accounting of his operations under the contract and his expenditures of money; shall dispose of any unused materials, supplies, and equipment for the joint account of the Operator and the Government in the proportion of their respective interests; and shall pay to the Government its pro-rata share of any money remaining.

Executed in triplicate the day and year first above written.

THE UNITED STATES OF AMERICA

Jewell S. Wisdom 60% Partner
(Operator)

By _____

By J. S. W.

U. S. GOVERNMENT PRINTING OFFICE 16—64066-1

I own 60% controlling int.
This is approved by Subsidiary
Partner as listed above MF-103

dma-1139X

MF-201

MORTGAGOR'S SUBORDINATION AGREEMENT

KNOW ALL MEN BY THESE PRESENTS:

WHEREAS, the owner is the holder of a mortgage, claim, ~~lien, or encumbrance dated~~ GRANDVIEW 1-TO 5- Checkoday 1+2 LEASE BUSTERS 1-2-3, ..., recorded in Book ....., page ....., of the records of the county of B/DISCRIPTION, State of ATTC, ..., upon that certain parcel of ground described in a certain Exploration Project Contract dated APR-....., 1950, between ~~CLYDE R/ G. J. MITCHE~~ + CLYDE RAMIN + Jerrell S. Wisdom, the owner of said property and the United States of America;

NOW, THEREFORE, the undersigned does by these presents subordinate all of his right, title, and interest in said mortgage, claim, lien, or encumbrance to the right, title, and interest of the United States of America under the provisions of said Exploration Project Contract, and agrees that the lien and claim of the United States of America under the provisions of said contract shall be prior to the undersigned's rights under the provisions of said mortgage, claim, lien, or encumbrance; and

The undersigned agrees to commit no act nor assert any right, title, or interest under said mortgage, claim, lien, or encumbrance that might contravene or conflict with the prior lien and claim of the United States of America under the provisions of said Exploration Project Contract.

This undertaking and covenant shall be binding upon the heirs, successors, and assigns of the undersigned.

Dated this 22 day of April, 1951.

Jerrell S. Wisdom
14631 Sherman Way
Van Nuys Calif.
+ CLYDE H. RAMIN,

Grandview Mining Claim
Recorded Page 11
Richard F. Ogden

U. S. GOVERNMENT PRINTING OFFICE 940767

Am Trading Deeds est. Information Contained within