OUT

No. or Name	Taken By	Date Taken	No. or Name	Taken By	Date Taken	No. or Name	Taken By	Date Taken
~~4789~~	~~600~~	~~4/25/59~~	Bay. 97					
6018	600	4/27/59						
~~4996~~	~~500~~	~~5/5/59~~						
~~6044~~	~~500~~	~~5/18/59~~						
~~6010~~	~~Beulah~~	~~5/20/59~~						
4698	500	5/21/59						
Bay 95								

OUT

No. or Name	Taken By	Date Taken	No. or Name	Taken By	Date Taken	No. or Name	Taken By	Date Taken
[illegible]	3763	4-17	5073	500	9/11			
	1312	4-24						
[illegible]	3752	[illegible]						
[illegible]	[illegible]	[illegible]						
[illegible]	3711	[illegible]						
[illegible]	4148	8-14						
[illegible]	Greenhouse	16						
Selfridge ES	3417	12/13						
[illegible]	3404	[illegible]						
600	3530	[illegible]						
	Bat 58							
500	[illegible]	3/26						
[illegible]	4553	[illegible]						
[illegible]	4712	10/24						
[illegible]	3993	11/6	(Bat 73)					
2856	500	9/29/58						
2907	500	9/24/58						

DMEA Form 9

UNITED STATES
DEPARTMENT OF THE INTERIOR
Defense Minerals Exploration Administration

OFFICIAL DOCKET FILE

DMEA NO. 4696

Application (Denied
(Withdrawn
(After disposition, delete items not applicable)

Contract (Terminated - not Certified
(Cancelled
(Terminated - Certified
(Royalty Agreement

This is the official contract file containing all official records of the project. The records contained in the files are checked and are arranged in this order:

Left Side

Interim Royalty Audits
Reports of Royalty Review
Certification of Discovery
Certificate of Audit (Final)
Interim Audit(s)
Report of Review
Termination Notice or Agreement
Recision Notice
Assignment of Contract
Contract Amendments (latest on top)
Contract with all exhibits and annexes
Owner's Consent to Lien
Subordination Agreement
Leases and assignments of leases
Application and attachments
(3) Envelope for maps

Right Side

Project summary
Work completed analysis
All other material is filed in chronological order with correspondence including the following reports as checked:

Final Field Team Report (Tab)
Operator's Final Report
(2R) Interim Reports
(2R) Operator's monthly reports and all attachments (latest on top)
On-site Exam Report(s) (Tab)
(4) Settlement Sheets

When the volume of records is expected to warrant additional folders, or when convenience of reference warrants separate folders for certain records, they should be set up in this order:

Left Side

Folder No. 2: (In chron. order) Interim Summary Reports by W. O. Engineers

Right Side

Operator's Semi-Annual Report for Certified Project, Field Team Interim Reports, Operator's Monthly Report with transmittal, narrative, maps, and Field Team review.

Folder No. 3: Maps (Use pocket folder or envelope. Fold maps with title block out and show reference to related document or correspondence.)

Folder No. 4: Settlement Sheets

Folder No. 5: Drill Logs

UNITED STATES
DEPARTMENT OF THE INTERIOR
DEFENSE MINERALS EXPLORATION ADMINISTRATION
1605 Evans Avenue
Reno, Nevada

OFFICIAL FILE COPY
DMEA
RECEIVED MAR 22 1957

DATE	INITIALS	CODE

March 20, 1957

Memorandum

To: Operating Committee, DMEA, ~~Interior Building~~
Washington 25, D. C.

From: Executive Officer, DMEA Field Team, Region II

Subject: Loan Application (Tungsten)
Richard A. Glenn, et al.
Bright Mars No. 1 and Bright Mars No. 2 Claims
Tulare County, California

Attached are three sets of MF-103, Application for Aid, forms relative to above subject. The fourth set has been retained in our files.

Application is well written but lacks pertinent data as to value of property. All equipment is charged to project which would bring cost of proposed work to a prohibitive unit cost.

S. Ricker

Attachs.

OFFICIAL FILE COPY DMEA RECEIVED MAR 22 1957		
DATE	INITIALS	CODE

5731 N. Loma
Temple City, Calif.

March 16, 1957

U. S. Department of the Interior
Defense Minerals Exploration ~~Administration~~
1605 Evans Avenue
Reno, Nevada

Dear Sirs:

Enclosed herewith is an Application for Aid in an Exploration Project, Pursuant to DMEA Order 1, under the Derense Production Act of 1950, as Amended, in quadruplicate, with supporting papers as requested in the Instructions. This application is for exploration for tungsten on the Bright Mars #1 and Bright Mars #2 claims, located in southern Tulare County, California. The application is made in my name, as managing partner, in behalf of the partnership made up of the four individuals whose names are listed on the application, all of whom are co-tenants in the properties described.

None of the supporting papers needs to be returned to me.

Yours truly,

Richard A. Glenn

Richard A. Glenn

DEPARTMENT OF INTERIOR
BUREAU OF MINES
REGION II
RECEIVED

1987 MAR 30 AM 9:50

RENO, NEVADA

Richard A. Glenn
5731 N. Loma
Temple City, Calif.

CONTENTS

	Page
DMEA Application Form	1
Instruction 1: Identification of Applicant	2
Instruction 3: Applicant's Property Rights	2
Instruction 4: Physical Description	5
General	5
Geology	6
Engineer's Report (Preliminary)	10
Instruction 5: The Exploration Project	12
Description	12
Background of Applicant	13
Instruction 6: Estimate of Costs	15
Instruction 7: Applicant's Participation	23

Geologic Map (1 sheet)

Cross Sections (1 sheet)

MF-103
(Revised April 1952)

UNITED STATES DEPARTMENT OF THE INTERIOR
DEFENSE MINERALS EXPLORATION ADMINISTRATION

Form Approved.
Budget Bureau No. 42-R1035.2.

RECEIVED MAR 22 1957 DMEA

APPLICATION FOR AID IN AN EXPLORATION PROJECT, PURSUANT TO DMEA ORDER 1, UNDER THE DEFENSE PRODUCTION ACT OF 1950, AS AMENDED

Not to be filled in by applicant

Docket No. #696
Metal or Mineral Tungsten
Date Received 3-22-57
Estimated Cost $45,323.65
Participation (Government %)

INSTRUCTIONS

1. *Name of applicant.*—(*a*) State here your full legal name, in the form in which you will wish to contract, and your mailing address: Richard A. Glenn
5731 N. Loma
Temple City, California

(*b*) If other than an individual, add to your name above whether a corporation, partnership, etc., and the name of the State in which incorporated or otherwise organized. Partnership organized in the state of California.

(*c*) If a corporation, add to above statement, titles, names and addresses of officers. Not applicable.

(*d*) If a partnership, add to the above statement the names and addresses of all partners. See attached sheet.

2. *General.*—Read DMEA Order 1, "Government Aid in Defense Exploration Projects," before completing this application. Submit this application and all accompanying papers in quadruplicate (four copies), with your name and address on each sheet of the application and on all accompanying papers. Where sufficient space is not provided on the form for all required information, state it on an accompanying paper, with a reference in each case to the instruction to which it refers by number. Comply with all applicable instructions; or, if not applicable, so state. File the application with Defense Minerals Exploration Administration, Department of the Interior, Washington 25, D. C., or with the nearest field executive officer thereof.

3. *Applicant's property rights.*—(*a*) State the legal description of the land upon which you wish to explore, including all land which you possess or control that may be benefited by the exploration, and excluding any land or interest in land which is not to be included in the exploration project contract See attached sheet.

(*b*) State any mine name by which the property is known. See attached sheet.

(*c*) State your interest in the land, whether owner, lessee, purchaser under contract, or otherwise See attached sheet.

(*d*) If you are not the owner, submit with this application a copy of the lease, contract, or other document under which you control the property. Not applicable.

(*e*) If you own the land, describe any liens or encumbrances on it See attached sheet.

(*f*) If the land consists of unpatented claims, add to the description above, the book and page numbers for each recorded location notice. See attached sheet.

4. *Physical description.*—(*a*) Describe in detail any mining or exploration operations which have been or now are being conducted upon the land, including existing mine workings and production facilities. State your interest, if any, in such operations. Also describe accessibility of mine workings for examination purposes. See attached sheets.

(*b*) State past and current production, and ore reserves, if any, giving quantities and grades. See attached sheets.

(*c*) Describe the geologic features of the property, including mineralization, type of deposit (vein, bedded, etc.), and your reasons for wishing to explore. Illustrate with maps or sketches. Send with your application (but not necessarily as a part of it) any geologic or engineering report, assay maps, or other technologic information you may have, indicating on each whether you require its return to you. See attached sheets.

(*d*) State the facts with respect to the accessibility of the project: Access roads, distances to shipping, supply and residence points. See attached sheets.

(*e*) State the availability of manpower, materials, supplies, equipment, water, and power. See attached sheets.

16—66551-1

5. *The exploration project.*—(*a*) State the mineral or minerals for which you wish to explore Tungsten

(*b*) Describe fully the proposed work, including a map or sketch of the property showing a plan (and cross sections if needed) of any present mine workings, and the location of the proposed exploration work as related to such features as contacts, veins, ore-bearing beds, etc. See attached sheets.

(*c*) The work will start within 60 days and be completed within 10 months from the date of an exploration project contract. See attached sheets.

(*d*) State the operating experience and background of the applicant with relation to the ability to carry out such exploration project, and also that of the person or persons who will supervise the operations. See attached sheets.

6. *Estimate of costs.*—Furnish a detailed estimate of the costs of the proposed work (you will have to use a separate sheet), under the following headings. Add the totals under all headings to give the estimated total cost of the project:

(*a*) *Independent contracts.*—(Note.—If the applicant does not intend to let any of the work to contractors, write "none" after this item. To the extent that the work is to be contracted, do not repeat the cost of the contract-work in subsequent items.) State the cost of any proposed independent contracts for the performance of all or any part of the work, expressed in terms of units of work (such as per foot of drilling, per foot of drifting, per hour of bulldozer operations, per cubic yard of material moved, etc.). See attached sheets.

(*b*) *Labor, supervision, consultants.*—Include an itemized schedule of numbers, classes and rates of wages, salaries or fees for necessary labor, supervision and engineering and geological consultants. See attached sheets.

(*c*) *Operating materials and supplies.*—Furnish an itemized list, including items of equipment costing less than $50 each, and power, water and fuel. See attached sheets.

(*d*) *Operating equipment.*—Furnish an itemized list of any operating equipment to be rented, purchased, or which is owned and will be furnished by the Operator, with the estimated rental, purchase price, or suggested use-allowance based on present value, as the case may be. See attached sheets.

(*e*) *Rehabilitation and repairs.*—Furnish a detailed list showing the cost of any necessary initial rehabilitation or repairs of existing buildings, installations, fixtures, and movable operating equipment, now owned by the Operator and which will be devoted to the exploration project. See attached sheets.

(*f*) *New buildings, improvements, installations.*—Furnish a detailed list showing the cost of any necessary buildings, fixed improvements, or installations to be purchased, installed or constructed for the benefit of the exploration project.

(*g*) *Miscellaneous.*—Furnish a detailed list showing the cost of repairs to and maintenance of operating equipment (not including initial rehabilitation or repairs of the Operator's equipment), analytical work, accounting, workmen's compensation and employers' liability insurance, and payroll taxes. See attached sheets.

(*h*) *Contingencies.*—Give an estimate of any necessary allowances for contingencies not included in the costs stated above.

NOTE.—No items of general overhead, corporate management, interest, taxes (other than payroll and sales taxes), or any other indirect costs, or work performed or costs incurred before the date of the contract, should be included in the estimate of costs. See attached sheets.

7. (*a*) Are you prepared to furnish your share of the cost of the proposed project in accordance with the regulations on Government participation (Sec. 7, DMEA No. 1)? Yes.

(*b*) How do you propose to furnish your share of the costs?

[X] Money [ ] Use of equipment owned by you [ ] Other

Explain in detail on acompanying paper. See attached sheet.

CERTIFICATION

The undersigned, whether as an individual, corporate officer, partner, or otherwise, both in his own behalf and acting for the applicant, certifies that the information set forth in this form and accompanying papers is correct and complete, to the best of his knowledge and belief.

Dated March 16, 1957, 195__

Richard A. Glenn
(Applicant)

By

Title 18, U. S. Code (Crimes), Section 1001, makes it a criminal offense to make a willfully false statement or representation to any department or agency of the United States as to any matter within its jurisdiction.

U. S. GOVERNMENT PRINTING OFFICE 16—66551-1

APPLICATION FOR AID IN AN EXPLORATION PROJECT,
PURSUANT TO DMEA ORDER 1,
UNDER THE DEFENSE PRODUCTION ACT OF 1950, AS ~~AMENDED~~

OFFICIAL FILE COPY
DMEA
RECEIVED MAR 22 1957

DATE	INITIALS	CODE

Instruction 1. Name of applicant.

(a) Richard A. Glenn
5731 N. Loma
Temple City, California

(b) Managing partner of a partnership organized in the state of California.

(c) Not applicable.

(d) The names and addresses of all partners:

Richard A. Glenn
5731 N. Loma
Temple City, California

Donald R. Hembre
3720 Nicolet
Los Angeles 16, California

C. J. Leith
8906 Mills Ave.
Whittier, California

Francis X. LoJacono
9313 S. Laurel
Whittier, California

Instruction 2. Not applicable.

Instruction 3. Applicant's property rights.

(a) See next page.

Richard A. Glenn
5731 N. Loma
Temple City, Calif.

Instruction 3. Applicant's property rights.

(a) Legal description.

1. Bright Mars #1 Lode Mining Claim described in Notice of Location - Lode - dated September 8, 1956, recorded September 11, 1956, as Document No. 28714 in Book 1947 at Page 115, and amended by Amended Notice of Location dated December 4, 1956, recorded December 5, 1956, as Document No. 36385 in Book 1961 at Pages 134 and 135, all of Official Records, Tulare County, State of California; and

2. Bright Mars #2 Lode Mining Claim described in Notice of Location - Lode - dated September 9, 1956, recorded September 11, 1956, as Document No. 28715 in Book 1947 at Page 116, amended by Notice of Location dated November 3, 1956, recorded November 19, 1956, as Document No. 34714 in Book 1958 at Page 169, and further amended by Amended Notice of Location dated December 4, 1956, recorded December 5, 1956, as Document No. 36384 in Book 1961 at Pages 132 and 133, all of Official Records, Tulare County, State of California; and

3. The parcel of land described as follows: Beginning at the Northwest (NW) corner monument of the Bright Mars #1 Lode Mining Claim, Notice of Location of said claim recorded September 11, 1956, as Document No. 28714 in Book 1947 at Page 115, Official Records, Tulare County, California, said Northwest corner being located North 26° West a distance of Seven Hundred Fifty (750) feet; thence South 64° West a distance of Three Hundred (300) feet from the discovery monument of said claim; thence from the point of beginning North 64° East a distance of Six Hundred (600) feet to the Northeast (NE) corner monument of said claim; thence South 26° East One Thousand Five Hundred (1500) feet to the Southeast (SE) corner monument of said claim; thence South 64° West a distance of Six Hundred (600) feet to the Southwest (SW) corner monument of said claim; thence North 26° West a distance of One Thousand Five Hundred (1500) feet to the Northwest (NW) corner monument of said claim, said corner monument being the point of beginning; and

4. The parcel of land described as follows: Beginning at the Northwest (NW) corner monument of the Bright Mars #2 Lode Mining Claim, Notice of Location of said claim recorded September 11, 1956, as Document No. 28715 in Book 1947 at Page 116, Official Records, Tulare County, California, said Northwest corner being located North 26° West a distance of Seven Hundred Fifty (750) feet; thence South 64° West a distance of Three Hundred (300) feet from the discovery monument of said claim; thence from the point of beginning North 64° East a distance of Six Hundred (600) feet to the Northeast (NE) corner monument of said claim; thence South 26° East a distance of One Thousand Five Hundred (1500) feet to the Southeast (SE) corner monument of said claim; thence South 64° West a distance of Six Hundred (600) feet to the Southwest (SW) corner monument of said claim; thence North 26° West a distance of One Thousand Five Hundred (1500) feet to the Northwest (NW) corner monument of said claim, said corner monument being the point of beginning.

(b) There is no mine name by which the property is known.

(c) The applicant is a co-tenant by reason of location.

(d) Not applicable

Richard A. Glenn
5731 N. Loma
Temple City, Calif.

Instruction 3, continued.

(e) There are no liens or encumbrances on the land.

(f) See description in Instruction 3 (a).

Richard A. Glenn
5731 N. Loma
Temple City, Calif.

Instruction 4. Physical description.

The Bright Mars #1 and #2 lode claims (tungsten) have no current production nor have they ever been produced. From surface indications supported by an assayed sample the quantity and quality of the tungsten ore on this property could represent a major tungsten discovery (see attached report by Minerals Engineering Company, October 23, 1956).

The town of Kernville, located approximately 20 miles to the south, would serve as residence and source of supply for the daily necessities of a mining operation. Kernville has hardware stores, general stores, garages, and good eating and housing facilities. A number of experienced and capable miners are presently employed by the logging industry in this area and are available for mining operations. Two of these men, who have been highly recommended, have been contacted and could be obtained for the proposed work. Materials, major equipment and repairs not available in Kernville could be obtained from not farther away than Bakersfield, which is 54 miles from Kernville via a primary hard surfaced highway.

Transportation facilities to the claims are excellent. A primary hard surfaced highway (Johnsondale to Kernville) is 1½ miles southwest of the claims, connecting them to the town of Kernville. A truck and vehicle road connects this highway to the Bright Mars claims at the present time (see accompanying map). Recently appropriations have been approved for a Forest Service primitive area development road. Construction on this road, which will primarily serve logging interests, was begun in the fall of 1956 and completion is planned by the summer of 1957. This road will come within 200 yards of the southwest boundary of the Bright Mars #2 claim and will provide an excellent transportation facility for this prospect without cost to the operators. The additional road development necessary for operations is discussed under the proposed exploration program.

The shipment of ore to a mill would be by truck over these roads, although the choice of a mill has yet to be made. There is now a small tungsten mill operating within a half mile of the claims. If the milling here should prove unsatisfactory ore would be shipped by truck to one of the custom mills at either Weldon (43 miles), Indian Wells (80 miles), Porterville (123 miles), or Bishop (200 miles).

Water can be obtained for six to seven months of the year from Dry Creek (see accompanying map) which crosses these properties, and a year round supply of water is obtainable from Brush Creek less than a half mile from these claims. There are several springs adjacent to the claims and a water well could be extablished at these places.

Although an electric power line will probably follow the present road development in this area, no such power is available at this time. The power for operations will be obtained from a portable gas engine (see equipment list).

The climate affecting these claims is conducive to year round operations. The elevations on the property and roads leading to it are all less than 5500 feet, based on published topographic maps and private survey.

Richard A. Glenn
5731 N. Loma
Temple City, Calif.

Instruction 4, continued.

At this elevation occasional snows and diurnal freezing would be anticipated during the winter months, but would not normally be severe enough to suspend operations, once established. Spring floods would not threaten either the roads or the mining operations.

There is no usable timber on the properties, but logging operations a short distance away provide an excellent source of supply for the timber needs of this operation. The cost of this material is shown on the equipment list.

GEOLOGY

The Bright Mars #1 and Bright Mars #2 lode mining claims are located in southern Tulare County, California, approximately 1½ miles northeast of the confluence of Brush Creek and the Kern River, in the northwest corner of the U.S.G.S. Kernville quadrangle (scale 1:125000, surveyed in 1906). Published maps, drawn to a scale sufficiently large to show details within the limits of a 600' x 1500' mining claim, are not available for this area. The map which accompanies this report was constructed by the locators of the Bright Mars #1 and Bright Mars #2 claims, using their own plane table survey for primary topographic control and subsequent hand level elevations for secondary control. Details of physiographic forms were obtained from aerial photographs. Elevations shown are all relative to Station 1, located near the road in the southwestern part of the map; since no bench mark was available for determination of absolute elevation, an arbitrary figure of 1000 feet was assigned to Station 1. According to the U.S.G.S. Kernville quadrangle map the elevation at Station 1 is approximately 4300 feet.

A geologic report by Miller and Webb on the Kernville quadrangle, including a geologic map, waspublished in 1940[1]. Many references to previous

---

1/Miller, William J., and Webb, Robert W., Descriptive Geology of the Kernville Quadrangle, California: Calif. Jour. Mines and Geol., vol. 36, pp. 343-378, 1940.

---

studies in this area are cited by these authors, but they state (p. 346):

> "Several papers have beenpublished on geomorphologic features of certain parts of the southern fifth of the Sierra Nevada, but remarkably little has been printed on the character, distribution, age relations, and origin of the rocks themselves."

The map published by Miller and Webb is at the scale of two miles to the inch and therefore, except to establish regional relationships, is too generalized to be used for the purposes of the present report.

Description of the rocks

Kernville Series. Within the local area embracing the Bright Mars mining claims are found metamorphic rocks of the Kernville series, a portion

Richard A. Glenn
5731 N. Loma
Temple City, Calif.

of a roof pendant in the Sierran batholith. The Kernville series probably is of Carboniferous age, equivalent to the Calaveras series farther to the north (Miller and Webb, pp. 352-353). A thickness of approximately 1300 feet of Kernville series is exposed within the area covered by this report.

Kernville marble of the Kernville series forms the prominent knob near the east edge of the map. This marble also crops out in a band near the northwest corner of the map, and north of the mapped area an extensive outcrop of marble forms a prominent north-south ridge. The marble is thick bedded, crystalline, fine to medium grained, and white to bluish gray and buff in color. The maximum thickness of the marble within the area covered by the map is 235 feet (see cross section B-B').

West of Fault I and north of Fault II the Kernville series beneath the marble includes quartzose schist, hornfels, and thin seams of tactite, all apparently interbedded and not amenable to subdivision into distinct units.

East of Fault I and south of Fault II, the Kernville series beneath the marble may be subdivided from top to bottom as follows:

1. Approximately 215 feet of reddish brown quartzose schist or phyllite, flaggy in character. The thickness of this unit apparently varies considerably.

2. A tactite unit, as much as 670 feet in thickness, composed primarily of interbedded fine grained blue-gray limestone and light brown or brownish red garnetiferous rock. The limestone interbeds generally are less than 3 inches thick, and the garnetiferous interbeds range in thickness from a half inch to 18 inches. This unit appears to be highly distorted, although the regional N.25-30°W. strike is readily determined. Weathered outcrops of this unit have a distinctly banded and knotted appearance.

Scheelite is distributed in the seams and beds of this tactite unit, and economic concentrations occur in at least three distinct zones within the unit. The uppermost zone is at the contact with the quartzose schist, and on the Bright Mars #1 claim is exposed in an old prospect hole located 135 feet southwest of a point on the east sideline 700 feet southeast of the northeast corner of the claim. Although this hole is caved and partly filled with rubble, a thickness of at least 2 feet and perhaps as much as 10 to 15 feet of ore may be seen in place. Molybdenite occurs as an accessory mineral in this ore. No assays have been run on samples from this hole, but the material dumped around the edge of the hole fluoresces vividly, and its tungsten content has been estimated at 2 to 5 per cent by an experienced assayer and consulting mining engineer. This ore zone can be followed from outcrop to outcrop southeastward along strike for a distance of 600 feet, but its fluorescence is not uniformly brilliant throughout this length.

The Bright Mars #1 discovery monument is located on a second zone whose fluorescence would indicate good economic ore. A weathered surface sample collected near this monument assayed 0.9% WO_3, although the sample appeared to have been leached and fluorescence was not apparent in the hand specimen. After crushing, small "pinheads" of scheelite were visible with the

Richard A. Gahnn
5731 N. Loma
Temple City, Calif.

ultraviolet light. Night time examination of outcrops near the monument reveals seams and scattered grains of fluorescent scheelite. The lateral extent and thickness of this ore zone have not been determined.

A third zone containing significant fluorescent scheelite is located 150 to 200 feet down the hill slope from the Bright Mars #1 discovery hole. The grade, thickness, and extent of this zone are not known.

It is highly probable that ore zones in addition to the three that have been mentioned are present within the tactite unit. The soil cover on the hill slope, wherever it is underlain by the tactite unit, contains fluorescent particles.

3. Beneath the tactite unit is from 0 to 150 feet of hornfels, a contact metamorphic facies of the Kernville series. The relationship of this hornfels to the tactite unit is not absolutely clear, but the contact between the two units probably is gradational, depending upon the degree of metamorphism. Seams of tactite have been recognized in the hornfels; in general the hornfels is black and micaceous, cut by many intersecting quartz veinlets, and is fractured extensively.

Igneous rocks. Plutonic igneous rocks, intrusive into the Kernville series, are exposed in the western part of the mapped area. These rocks were mapped as a diorite facies of the Isabella granodiorite by Miller and Webb (pp. 357-358). The detailed petrography of these rocks within the Bright Mars #1 and #2 claims has not been studied, but megascopically it appears that two facies are represented. The first and most widespread is a hard, gray, medium grained quartz diorite or granodiorite that weathers to smooth outcrops and rounded to spheroidal boulders. The second facies is buff colored and very friable, tentatively identified megascopically as monzonite. This monzonite is found along the contact between the igneous and metamorphic rocks, and appears to be intrusive into the gray granodiorite as well as into the Kernville series. Because of its friability the monzonite weathers to individual mineral grains or aggregates of mineral grains, and as a result it is poorly exposed except in artificial excavations. One theory, as yet unchecked microscopically, explains the friability as being due to the loss of fluids to the intruded rocks from the igneous mass after crystallization of the feldspars and ferromagnesian minerals but prior to crystallization of the quartz and the more volatile constituents. Thus the monzonite would be the probable source of the mineralizers which invaded the adjacent rocks.

Structure

The major structural feature in the northern part of the Kernville quadrangle is the Kern Canyon fault, which trends northward approximately a quarter of a mile east of the Bright Mars #1 claim. This fault probably is the largest fault in the southern Sierra Nevada, and extends from Kernville northward at least 40 miles (Miller and Webb, p. 361). Where it passes near the Bright Mars claims this fault brings Kernville series into contact with the crystalline granitic batholith, and transgresses obliquely the contacts between rock units within the Kernville series.

Fault I, within the mapped area, parallels the Kern Canyon fault and

Richard A. Glenn
5731 N. Loma
Temple City, Calif.

Instruction 4, continued.

crosses the northwest corner of the Bright Mars #2 claim. This fault may continue southward, but its extent in this direction was not traced. To the north Fault I appears to die out in the undifferentiated Kernville series which underlies the steep slope north of the Bright Mars claims. The magnitude and direction of displacement on this fault is not known at the present time but it is felt that its attitude is essentially vertical and that the movement on the fault may be rotational and related to Fault II.

The east-west trending Fault II intersects Fault I near the northwest corner of Bright Mars #1 claim, and like Fault I, probably is vertical and the result of rotational movement. The marble at the east edge of the map is displaced little, if any, by movement along Fault II.

Fault III intersects Fault I near the northwest corner of Bright Mars #2 claim and is recognized in that area as a pronounced shear zone striking N.30°W. and dipping 55° to 60° to the northeast. The trace of this fault can be followed on aerial photographs southeastward across the topographic saddle near the southeast corner of the map, and from there southeastward down the back slope of the ridge.

From the information at hand it appears that the fault block bounded on the north by Fault II, on the west by Fault I, and on the south by Fault III was dropped down unequally along these faults, the structurally lowest point being at the northwest corner of Bright Mars #1 claim where Faults I and II intersect. Although these faults are all younger than the major phases of the igneous intrusion they may be old enough to have exerted some control on the mineralization of the area. The depressed fault block, composed essentially of calcareous rocks, could have acted like a sponge to take up the late mineralizing fluids.

Folding is of minor importance within the mapped area. Within the fault block on which the Bright Mars claims are located dips are easterly and average about 50°. Slump and surface creep flatten the dips locally, and near the faults vertical dips may be observed.

Near the southern end of Bright Mars #1 claim is an outcrop of marble with strike concordant with regional strike, but with low easterly dip. About 20 feet of sheared and fractured granite occurs immediately above the marble. The marble terminates abruptly to the northwest and to the southeast, which, together with the low dip suggests that this outcrop is not in place because of slumping or sliding, or to otherwise unrecognized faulting.

MINERALS ENGINEERING CO.

ENGINEERS Meco ASSAYERS

1200 SUBWAY TERMINAL BLDG.
417 SOUTH HILL STREET
LOS ANGELES 13
MUTUAL 6708

OFFICIAL FILE COPY
DMEA
RECEIVED MAR 22 1957

DATE	INITIALS	CODE

October 23, 1956

Mr. Richard A. Glenn and Associates
5731 No. Lona Ave.
Temple City, Calif.

Gentlemen:

At your request we have made a preliminary examination of your Bright Mare tungsten properties north of Keeneville, California. We consider this an exceptionally good property probably the best one which we have seen. It is on westerly slope of a "hogback" mountain which was caused by a steeply dipping lime bed that runs for many miles northerly through the Sierra Mountains. Near the foot of this small mountain of 5,000 feet elevation is a granitic monzonite "plug" or Batholyth which we believe is a source of the tungsten. As the fumes escape from this plug they combine with the lime which has been uptilted from the west by this intrusion causing it to become a contact mineral tactite of marble, garnet, epidote, wollastonite and other minerals. This hogback mountain has been cut by a north 60° east fault on the north side of this fault block where it appears to be easy to mine from an adit drift tunnel along the vein about 100 feet below two outcrops. On the north tip of this mountain is a small tunnel and open-cut with good ore as shown by the mineralight at night. There appears to be three or more of these ledges which can be traced for several hundred feet to the south. These ore bodies strike about N 30° W and dip along the bed about 45° easterly. Most of the mines

in California strike in this general direction. There appears to be some cross ledges parallel to the northeast faulting which should make ore shoots where they cross the main veins. This property is in an area where an all year mining could be carried on. It is an ideal elevation for a good climate. It is about two miles down hill to the paved road and power line where a tungsten mill could be built near the river or on a side stream. We consider a mill a good investment in this area as there are many tungsten deposits with no good mill within a hundred miles.

We would recommend that an adit tunnel be run in on the north end of the highest vein and crosscuts run to the parallel veins a few tens of feet westerly. We would urge this work be started as soon as practical so the miners would be out of the weather before the snows come near Christmas time.

Yours respectfully,

Norman Whitmore

NORMAN WHITMORE
Engineer of Mines

NW:dw

Ri[illegible]ard A. Glenn
5731 N. Loma
Temple City, Calif.

Instruction 5. The exploration project.

(b). The best ore exposed on the two claims occurs in the old prospect hole on the top of the ridge as shown on cross section A-A'. An assayed sample (0.9% WO_3) was taken from a weathered outcrop just above Bright Mars #1 discovery hole. Outcrops of tactite which exhibit good fluorescence at the surface occur between these two points. Since the purpose of this program is exploratory in nature, it is deemed advisable to drive the two proposed exploratory adits from the west slope of the hill through tactite rather than to come in from the east slope where no additional tactite was detected.

The proposed exploratory program outlined below is divided for convenience into two parts. Part I consists of driving an adit into the tactite from the west slope of the hill at an elevation 25 feet below the elevation of the old prospect hole (see cross section A-A'). Part II consists of driving an adit into the tactite at an elevation 75 feet below the elevation of the old prospect hole. The proposed exploratory program for which this application is concerned includes both Part I and Part II as a single operation. The proposed program is described in detail below.

Part I. For access to the proposed mining site, approximately 4,700 feet of road will have to be constructed as shown on the accompanying geologic map. The proposed road would start from an existing U.S. Forest Service road in the area and rise on a 10% maximum grade to the mine. The construction of the road would be done on a contract basis. Local manpower and equipment will be used. The location of the road as shown on the map is the shortest and most easily constructed route as determined by consultation with the proposed contractor who is currently engaged in constructing a road for the U.S. Forest Service in the area immediately southwest of the proposed mine.

The proposed road would terminate at an elevation 25 feet below the old prospect hole on the top of the ridge as shown on the geologic map and cross section A-A'. A level working area approximately 30 feet wide and 100 feet long would be constructed in front of the proposed adit. A second level working area approximately 30 feet wide and 100 feet long would be constructed 50 feet below the old prospect hole. This working area would contain the ore storage bin and would be connected to the proposed road leading to the proposed adit as shown on the geologic map.

For reasons discussed above, it is proposed that an adit be driven into the tactite from the west slope of the hill at an elevation 25 feet below the elevation of the old prospect hole (see cross section A-A'). The adit would be driven approximately 110 feet through tactite to its contact with schist. When the ore zone of the old prospect hole is intersected, a drift would be driven 100 feet southeasterly along the ore zone.

Richard A. Glenn
5731 N. Loma
Temple City, Calif.

Instruction 5. continued.

Part II. It is proposed that a second adit be driven, after the completion of Part I above, into the tactite from the west slope of the hill at an elevation 75 feet below the elevation of the old prospect hole (see cross section A-A'). The adit would be driven approximately 235 feet through tactite to its contact with schist. When the ore zone of the old prospect hole and of the first adit is intersected, a drift would be driven 100 feet southeasterly along the ore zone.

Approximately 1,000 feet of additional roads will have to be constructed to complete Part II of this project. One road will terminate at an elevation 75 feet below the old prospect hole as shown on the geologic map. A level working area approximately 30 feet wide and 100 feet long would be constructed in front of the proposed adit. The second road would terminate at an elevation 100 feet below the old prospect hole and would connect a working area approximately 30 feet wide and 100 feet long containing the second ore storage bin with the road leading to the first adit (see geologic map).

It is anticipated that the proposed adits will yield ore of commercial grade. One ore bin for each adit is believed sufficient for storage of this ore.

(c). The purchase of equipment will start within 14 days, contracts for labor negotiated within 30 days, work started within 60 days and the project completed within 10 months from the date of an exploration project contract.

(d). The applicants are a partnership consisting of four individuals as follows:

1. Richard A. Glenn, age 32, B.S. in Civil Engineering, 1949, Purdue University, Lafayette, Indiana; PhD. in Geology, 1953, Washington University, St. Louis, Missouri; geologist, Standard Oil Company of California, Los Angeles, California, since 1953; Scholarship, Washington Univ. 1952; teaching Assistant, geology, Washington Univ., 1949-1951; Purdue Univ. 1946-1949; U.S.Air Corps, 1943-1946.

   Mr. Glenn is to serve as resident superintendent for the exploratory program. He will reside in Kernville, California. The road construction and mining operation will be handled by competent independent contractors who will provide their own direct supervision for the successful completion of their contracted work.

2. Donald R. Hembre, age 25, B.S. in Geology, University of Wisconsin, 1954; M.S. in Geology, University of Wisconsin, 1955; geologist, Standard Oil Company of California, Los Angeles, California, since 1955; teaching assistant, geology, Univ. of Wis., 1954-1955; Humble Oil and Refining Company, Alaska, 1953; California Company, Colorado, summer 1954.

Instruction 5. continued.

3. Carlton J. Leith, age 37, B.A. in Geology, 1940, University of Wisconsin, Madison; M.A. in Geology, 1941, Univ of Wis; Ph.D. in Geology, 1947, University of California, Berkeley; Geologist, Standard Oil Company of California, since 1951; Geologist, U.S. Corps of Engineers, 1949-1951; Instructor and Assistant Professor of Geology, Indiana University, 1947-1949; Teaching Assistant, University of California, 1946-1947; Geologist, Standard Oil Company of Texas, 1946; U.S. Navy, 1943-1946; Assistant Mineral Economist, U.S. Bureau of Mines, 1942-1943; Teaching Assistant, University of California, 1941-1942.

4. Francis X. LoJacono, age 29, Patent Draftsman, R. Welton Whann, Patent Attorney, Los Angeles, California, since 1953; Patent Draftsman, O'Brien and Jacobson, Patent Attorney, Washington, D.C., 1952-1953; Design Draftsman, Vitro Corp. of America, Silver Spring, Md., 1951-1952; Patent Draftsman, O'Brien and Jacobson, Patent Attorney, Washington, D.C., 1949-1951; Design Draftsman, American Iron Works, Bladensburg, Md., 1949; U.S. Navy, 1945-1948; Prospecting since 1953.

Mr. Norman Whitmore, Engineer of Mines, Minerals Engineering Co., 417 South Hill Street, Los Angeles 13, California will supervise the overall operation and assay the ore samples. He will visit the mine as often as necessary but in no case less than once a month. One assay per round will be made in both the adits and drifts.

Richard A. Glenn
5731 N. Loma
Temple City, Calif.

Instruction 6. Estimate of costs.

	Part I	Part II
(a) Independent contracts.		
1. Road construction (Labor & Equipment)		
(a) 9/10 mile of road @ $1000/mile –	900.00	
(b) 2/10 " " " " " " –		200.00
2. 5'x 7' Drifts & adits (Labor)		
(a) 110'-5'x7' adit @ $35/foot –	3850.00	
100'-5'x7' drift @ " " –	3500.00	
(b) 235'-5'x7' adit @ " " –		8225.00
100'-5'x7' drift @ " " –		3500.00
3. Erection ore storage bin (Labor) –	400.00	400.00
(b) Labor, supervision, consultants.		
1. Supervision - Mr. Richard A. Glenn		
(a) $575/mo. for 5 months –	2875.00	
(b) " " " " " –		2875.00
2. Consultant - Mr. Norman Whitmore, E.M.		
(a) $100/mo for assays –	300.00	
(b) " " " " –		500.00
(c) $150/mo. for consultation –	450.00	
(d) " " " " –		750.00
(c) Operating materials and supplies.		
1. dynamite and fuses		
(a) 27 cases @ $25/case –	675.00	
(b) 42 " " " " –		1050.00
2. gasoline & oil for compressor		
(a) 530 gal @ $.30/gal & 53 qts @ $.60/qt. –	190.00	
(b) 840 " " " " & 84 " " " –		300.00
3. gasoline, oil & grease for Truck		
(a) 750 gal @ $.30/gal, 40 qts @ $.60/qt & 8 grease –	275.00	
" " " " 50 " " " " " 10 " –		350.00
ent & supplies		
sheets, 3/16" x 40" x 5',		
een, 1" hole in each end –	60.00	

Richard A. Glenn
5731 No. Loma
Temple City, Calif.

Instruction 6. Estimate of costs, cont.

	Part I	Part II
4. Equipment & supplies cont.		
Wheel Barrow-Rubber Tire, wood handle "Garlinghouse" -	50.00	
6-Lights Autolight, 100 lb Natl. Carbide -	25.00	
5' Crow bar -	7.00	
3' Claw bar -	1.50	
"Bardown" - Make 1/2" x 6' pipe with 5/8" x 18" pry bar welded in end -	2.00	
Shovels		
3 - sq. point shovel, long handle, "Ames" 601 alloy -	6.00	
3 - rd. shovel, long handle, "Ames" 603 alloy -	6.00	
2 - rock spoon "scoops" -	8.00	
4 - Drift picks - 5 lb, Big Eye -	12.00	
4 - Pick handles -	4.00	
2 - Hand Pick Estwing -	10.00	
Hammers		
2 - single Jacks, 4 lbs, 2 handles -	8.00	
2 - double Jacks, 8 lbs, 2 handles -	14.00	
1 - Cross Pean, Black Smith hammer, 3 lb. "Champion" -	3.00	
1 - 1 lb. Ball pean Proto	1.50	
1 - Ripping Plumb, Straight Claw, 1 lb. Glass Fiber handle -	5.00	
Wrenches		
2 - Pipe Rigid, E 18 -	11.00	
1 - Pipe Tongs, Williams 12, 27" -	2.00	
1 - Socket Proto Set 5400 AB -	36.00	
2 - 8" Crestoloy AC 18 -	2.30	
1 - 12" " AC 112 -	4.40	
Screwdrivers		
1 - 7/32" Proto 9832 -	0.75	
1 - 11/32" " 9842 -	1.50	
Ax		
2 - Plumb Construction, Dreadnought 4 lb. -	5.00	
1 - Hand Ax, Estwing	4.75	

Richard A. Glenn
5731 N. Loma
Temple City, Calif.

Instruction 6. Estimate of costs, cont.

	Part I	Part II
4. Equipment & supplies cont.		
Saws		
1 - Docking 30" Disston 196 -	5.50	
1 - Hand Saw, Disston D-7, Cross cut, 26" -	4.00	
1 - Hack saw frame, Miller Falls 1027 -	2.50	
12 - Blades, Simonds Tungsten 12", 18 Teeth/in -	1.50	
12 - " " " ", 32 Teeth/in -	1.50	
Pliers		
1 - Cresent Thin Bent Nose J-26-6" -	1.65	
1 - Longnose Kroenten 1660 -	2.15	
1 - Vice Grip Peterson 10W -	3.00	
1 - Electric Klein's Side Cutting 201 7" -	4.05	
Anvil, 100 lb. Eagle Blacksmith -	30.00	
Cold Chisel, 1/2" & 1" -	2.00	
Vice, Machinist 5" Jaw, Swivel Base, Athol -	30.00	
Pipe Vice, Williams Choice #1 -	10.65	
Drill Press, Bench Type "Craftsman" -	85.00	
Grinder Head 1/2 shaft, Miller Falls 120 -	5.00	
6 - Grinding Wheels, 5 green for bits -	15.00	
Engine, Briggs Stratten, 1 HP Gasoline -	50.00	
Welding Outfit, Acetylene -	150.00	
Breast Drill, Miller Falls 120 B -	7.50	
Bits, 1/16 to 1/2" by 32nd -	13.00	
Brace, 12" Stanley 945 -	6.55	
Tap & Die Set, Morse No. 100 -	30.00	
Toledo Pipe Dies #12 pipe rigid, 1/2", 3/4", 1" & 2" -	26.00	
Pipe Cutter to 2" -	10.00	
Cutting Oil -	1.00	
Die, 5/8" - 11 & 1 - handle -	12.60	
Files		
1 - Flat 10" -	0.75	
2 - Saw File 7" -	0.75	
Cantsaw 8" for Docking Saw -	0.75	
Punch		
Taper Proto 96 1/2" -	1.00	
Center punch 3/8" Proto -	0.40	
Wood Tools		
Plane, Stanley Scrub No. 40 -	6.00	
Wood Bits, Expansion Bit, 7/8 - 3" Irwin 21 -	2.25	
Irwin 627, Set of 13 bits -	10.30	
Ship Auger, 5/8" -	2.00	

Richard A. Glenn
5731 N. Loma
Temple City, Calif.

Instruction 6. Estimate of costs, cont.

	Part I	Part II
4. Equipment & supplies cont.		
Wood Tools, cont.		
Draw Knife -	2.00	
Rasp, 12" half round, No 111 -	2.00	
Square, Stanley 100 -	4.00	
Level, 24" Stanley 0 -	3.70	
Saw Set Stanley 42 -	4.50	
Chisel Wood, 1/2" & 1" -	4.00	
2 - Loading Sticks, 1" x 6' -	2.00	
Wire, 1/4 & 1/8, 25 lb each -	8.00	
Nails		
10 lb - 6d -	1.50	
Keg - 16d -	12.95	
Keg - 30d -	12.95	
5/8" Bolt stock, 3-20' lengths, 60 lbs -	20.00	
5/8" Nuts, 50 Coarse Thread Hex steel -	4.00	
Washers, 5/8", 5 lb -	1.00	
Drill Rod, Each 1/4", 3/8", 1/2" & 5/8" -	10.00	
Lumber for general use		
6 - 6" x 6" x 20'		
6 - 2" x 4" x 14'		
6 - 1" x 4" x 16' say 450 BF @ $90/MBF -	40.50	
Manilla rope - 5/8" - 100' -	3.00	
First Aid supplies as per Safety Orders -	50.00	
Pipe		
300' - 2" B.I. Pipe @ $.50/ft -	150.00	
100' - " " " " " -		50.00
300' - 1" " " " $.25/ft -	75.00	
100' - " " " " " -		25.00
Fittings		
2" - 6T, 6L, 6 plug, 6 union, valves -	35.00	
1" - " " " " "	15.00	
6 - Reducers 2" - 1"	12.00	
Water Tank, stationary -	30.00	
Water Tank, Truck -	30.00	
Miscellaneous -	100.00	
4% sales Tax on item 4 (Equip & Sup.) -	58.35	3.00

Richard A. Glenn
5731 N. Loma
Temple City, Calif.

Instruction 6. Estimate of costs, cont.

	Part I	Part II
(d) Operating equipment.		
1. Truck, Ford F-250, stake body -	2,250.00	
2. Compressor, 125 ft³ -	3,500.00	
3. Drill & accessories -	1,000.00	
4. Ore Car "Card," 16 ft³, Roller Bearing -	250.00	
5. Track		
(a) 500' of 12 lb rail @ $12.70/100 lbs -	254.00	
(b) 700' " " " " " " -		412.00
(c) 24 pr. splice bars @ $.85/pr -	20.40	
(d) 36 pr. " " " " -		30.60
(e) spikes 3/8" x 2 1/2" 1 Keg @ $48/Keg -	48.00	
(f) Ties - 85, 3" x 3" x 30", 160 BF @ $90/MBF -	14.40	
(g) " - 120, " " " , 225 " " "		20.25
6. 4% Sales Tax -	293.50	18.50
(e) Rehabilitation & repairs. Not applicable.		
(f) New buildings, improvements, installations.		
2 - Ore storage bins		
(a) Lumber, (see material list), 4,000 BF @ $90/MBF -	360.00	360.00
(b) Metal parts 5/8" Bolt stock, 8-20' lengths -	75.00	75.00
(c) Nails - 20d, Keg	12.95	12.95
(d) Concrete 10 ft³, 1:2:3 mix -	10.00	10.00
(e) 4% Sales Tax	18.30	18.30
(g) Miscellaneous.		
1. Workmans Compensation Ins.	50.00	
2. Liability Insurance	100.00	
3. Truck Insurance	200.00	
4. Equipment Insurance	100.00	
5. Accounting		
$ 100 To set up books	100.00	
$ 50/mo for audit	250.00	250.00

Richard A. Glenn
5731 N. Lomo
Temple City, Calif.

Instruction 6. Estimate of costs, cont.

	Part I	Part II	
Miscellaneous cont.			
6. Equipment repair 10% of oper. equip. less track -	175.00	525.00	
(H) Contingencies.			
4% possible increase in cost of materials.	750.00	600.00	
Total costs -	24,763.05	20,560.60	
Combined Total Cost -			45,323.65

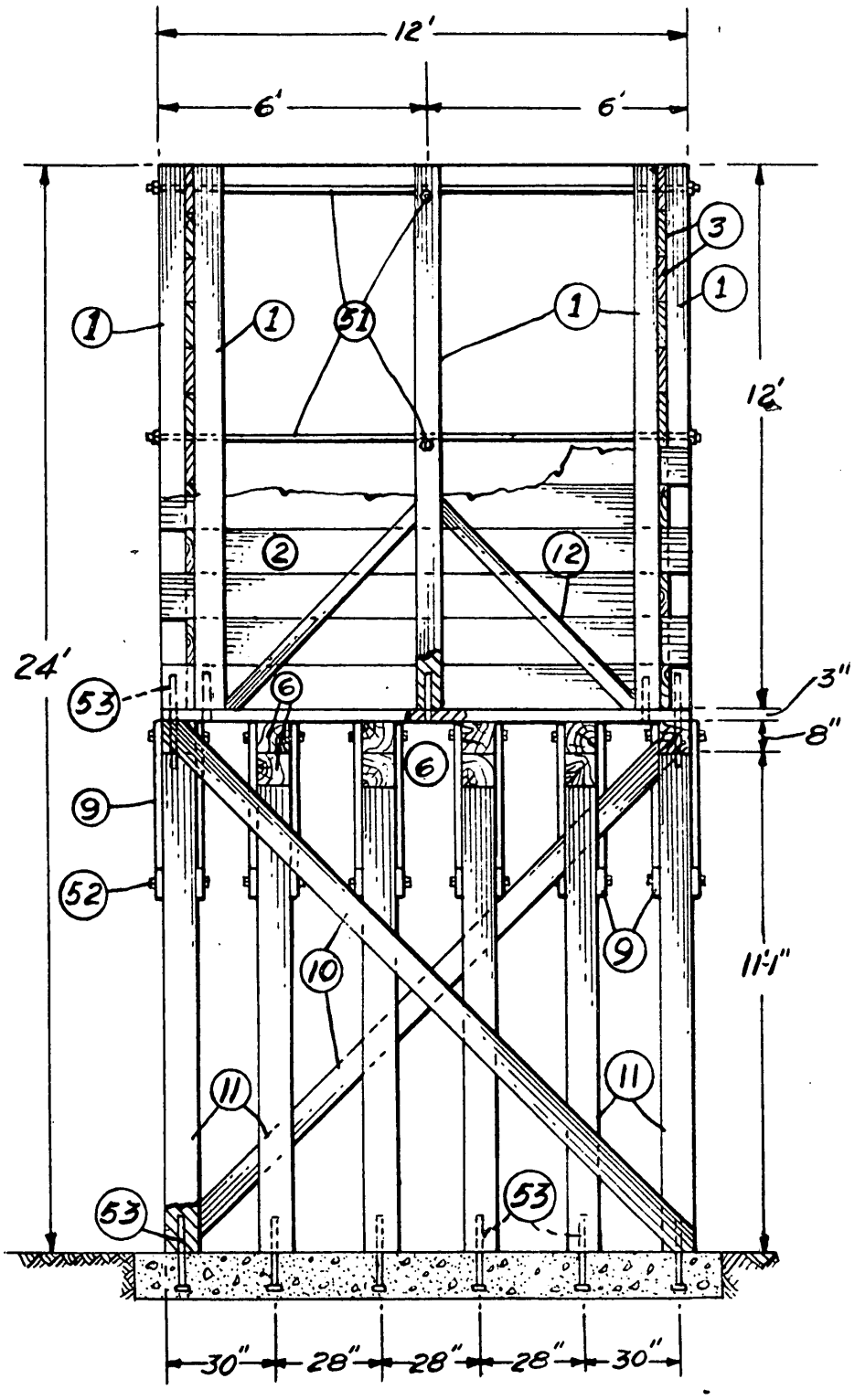

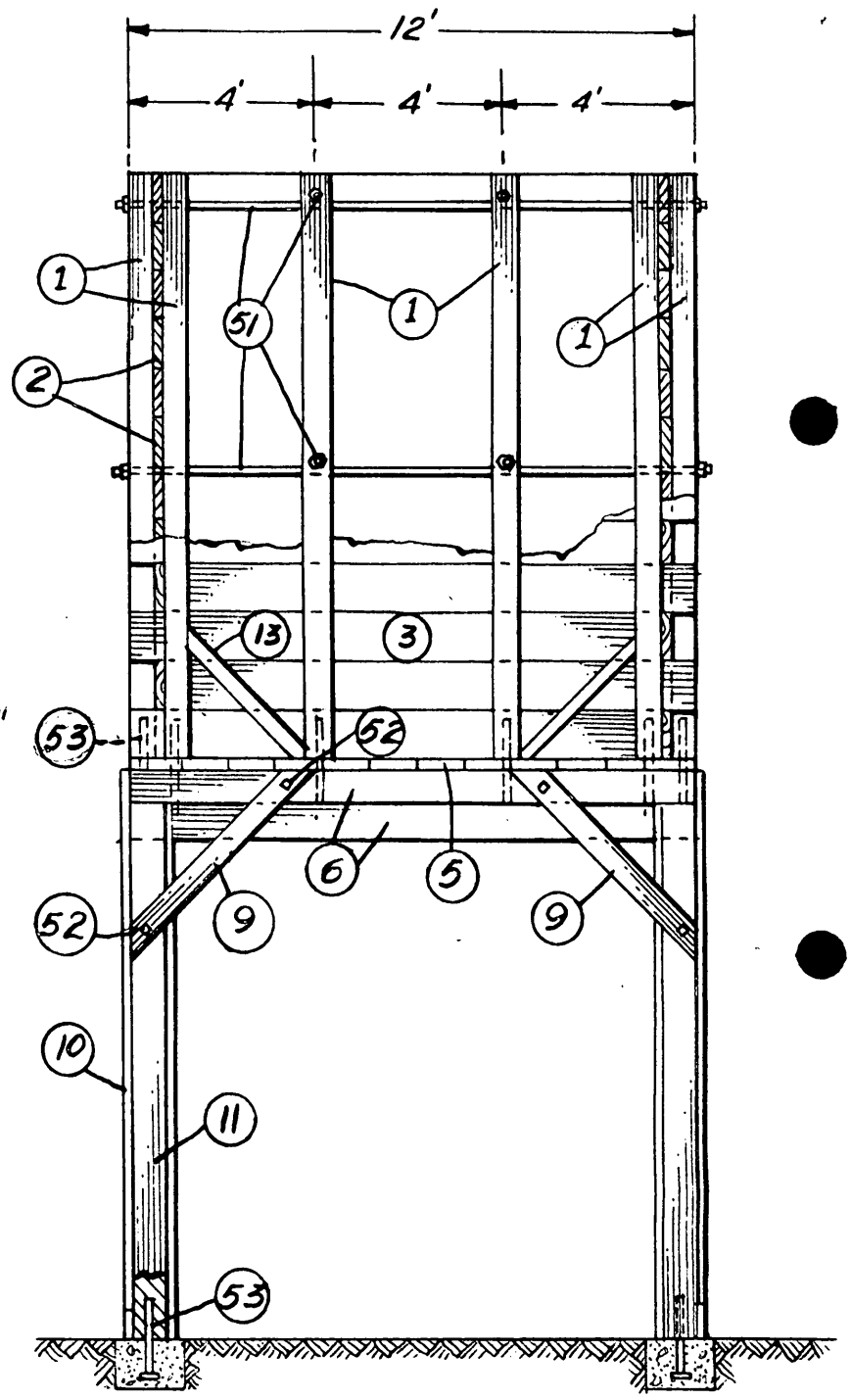

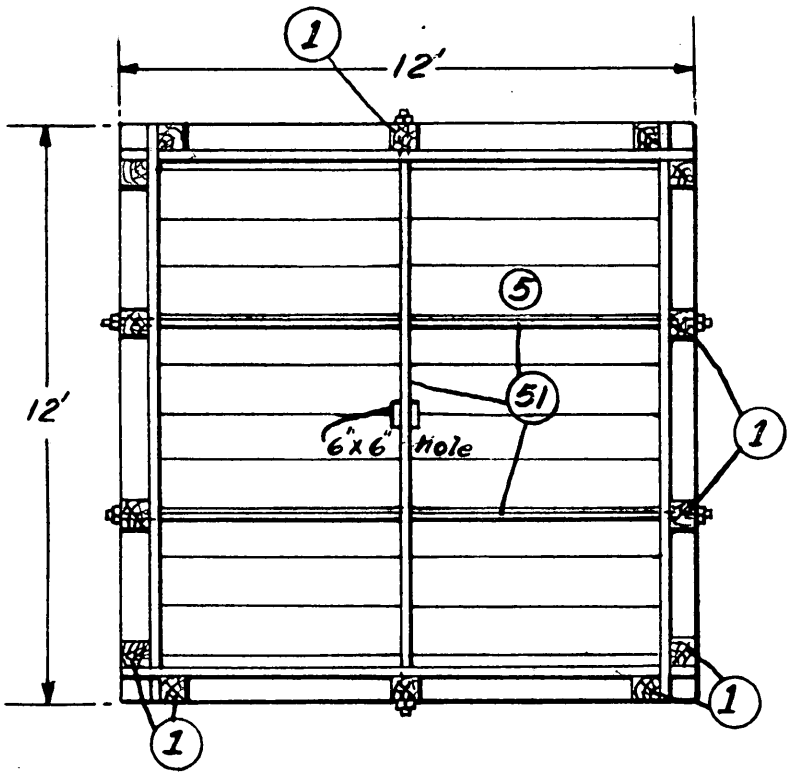

DETAILS OF STORAGE BIN

0 1 2 3 4

feet scale

Note

See Material list

Original Design: Norman Whitmore, 11/29/51

Modified by R. A. Glenn, 3/3/57

Drawn by F. X. LoJacono 3/6/57

OFFICIAL FILE COPY
DMEA
RECEIVED MAR 22 1957

DATE	INITIALS	CODE

Richard A. Glenn
573[illegible]N. Loma
Temple City, Calif.

Ore Storage Bin

12' x 12' x 12'

WOOD

PART NO.	REQ'D	SIZE	B F	
(1)	14	6"x6"x12'	504	posts
(2)	24	2"x12"x12'	576	sides
(3)	24	2"x12"x12'	576	ends
(5)	13	3"x12"x12'	468	floor
(6)	10	8"x8"x12'	640	beams
(9)	24	2"x6"x6'	144	braces
(10)	4	2"x6"x18'	72	braces
(11)	12	8"x8"x12'	768	columns
(12)	4	3"x6"x7'6"	45	braces
(13)	4	3"x6"x5'	30	braces
			3823	

METAL

(51)	6	5/8"x12'4" Bolt stock with 2 nuts, 2 washers/ each.
(52)	24	5/8"x1'4" " " " " " " " ".
(53)	26	5/8"x1'4" Bolt stock.
Nails	Keg	20d
Concrete	10 ft^3	1:2:3 mix for footing.

Richard A. Glenn
5731 N. Loma
Temple City, Calif.

Instruction 7. The money required for the applicant's share of the costs will be obtained from the private resources of the applicant and his partners, and will be available at the time the DMEA contract is signed.

OFFICIAL FILE COPY
DMEA
RECEIVED MAR 22 1957

DATE	INITIALS	CODE

DMEA Form 7
(12-56)

OFFICIAL FILE COPY

Date	Surname	Code
	Chapman	400
	Martin	400
7/31	Martin	130
"	Johnson	110
"	Mittendorf	100
8/1	[illegible]	225
7/31	Lamb	130
7/31	Killegaard	130

225

JUL 31 1957

Mr. Richard A. Glenn
5731 North Lane
Temple City, California

Re: Docket No. DMEA 1696 - Tungsten
Bright Mare Nos. 1 and 2 claims
Tulare County, California

Dear Mr. Glenn:

Your application for exploration assistance and other data available to us in Washington concerning the referenced property have been reviewed.

Projects approved by the Defense Minerals Exploration Administration must, in its judgment, show definite promise of yielding materials of acceptable grade in quantities that will significantly improve the mineral supply position of the National Defense Program.

Careful study of all our information, although noting the occurrence of tungsten mineralization on your property, indicates to us that the probability of disclosing significant ore reserves is not sufficiently promising to justify Government participation. Under these circumstances, we regret to advise you that your application is denied.

We wish to thank you for your interest in the Defense Minerals Exploration Administration program and for bringing this property to our attention.

Sincerely yours,

C. O. Mittendorf (for)

Administrator

TLChapman/eaf - 7/30/57
cc to: Docket
Code 400
Admr. Read. File
Oper. Comm.
FT REG II
Messrs. R. Holliday, USBM
T. Killegaard, USGS

8623

DMEA Form 7
(12-56)

OFFICIAL FILE COPY

Date	Surname	Code
	Chapman	400
	Martin	400
		110
		100
		225

July 30, 1957

MEMORANDUM

To: Administrator

From: Division of Iron and Ferro-Alloys

Subject: Denial of subject application for exploration assistance in the amount of $45,323.65
Docket No. DMEA-4696, Tungsten
Richard A. Glenn
Bright Mars Nos. 1 and 2 claims
Tulare County, California

Denial of the subject application is recommended by this Division based on the following information:

The applicant, Richard A. Glenn, requested exploration assistance in the amount of $45,323.65 on March 16, 1957, for access roads, crosscut adits and drifting. A field examination of the property was made on May 1 and 2, 1957, by R. G. Reeves and P. F. Taylor, Geological Survey, and J. D. Warne, Bureau of Mines, accompanied by the applicants.

Applicant: A partnership, consisting of the following:

Richard A. Glenn (managing partner)
5731 Loma, Temple City, California

Donald R. Hembre
3720 Nicolet
Los Angeles 16, California

C. J. Leith
8906 Mills Avenue
Whittier, California

Francis X. LoJacono
9313 South Laurel
Whittier, California

Property Ownershi;: The following unpatented lode mining claims, owned by the applicant are recorded as follows:

Claim Name	Book No.	Page No.
Bright Mars No. 1	1961	134-135
Bright Mars No. 2	1961	132-133

8623

The claims are located in section 30, T. 22 S., R. 33 E., M.B.& M., Tulare County, California.

The property is on the front slope of an erosion escarpment underlain by thick bedded marble overlying phyllite and schist of the Kernville series. The metamorphic rocks are cut off to the east by the Kern Canyon fault and to the west by Isabella granodiorite. A tactite zone in marble and schist borders the igneous contact for 3,000 feet.

Scheelite is distributed through most of the tactite in concentrations of a few hundredths of a percent or less of WO_3 but principally in four bedding zones 5 to 15 feet thick in the upper part of the tactite. The better ore showings occur where the beds are crumpled by anticlinal folding. The ore occurs in small pipes and stringers in the sheared and folded zones.

Past History and Production:

The claims were first located about 1942, but were allowed to lapse. In 1956 they were located by the present owners (the applicants). The claims have been prospected by several shallow pits and an open cut 20 feet long and 10 feet deep.

There is no equipment on the property and no production has been made.

Ore Values and Tonnage:

Samples taken by the examining team gave the following results:

Sample No.	Width	Description	Percent WO_3
1	1.3'	Channel, lower open cut	0.27
2	2.4'	Chip, 10 ft. from cut A	0.63
3	1.3'	Surface above cut	4.53
4	1.1'	Chip sample across outcrop	0.29
5	2.5'	Channel across bottom of upper pit. Shows scheelite & molybdenum	0.01

The northern zone is inferred to contain approximately 1,000 tons of 1.0 percent WO_3 in three small pipes, 15 by 3 feet, 4 feet by 2 feet and 4 feet by 2 feet in cross section and 200, 150 and 100 feet deep. The southern zone is inferred to contain about 150 tons in three small shoots. The surrounding area contains specks of scheelite estimated by lamping to contain 0.01 to 0.05 percent WO_3.

Proposed Work: The applicant proposes to build about 4,700 feet of access road, 2 adits and 200 feet of drifting at an estimated cost of $45,323.65.

Comments and Conclusions:

The Field Team concludes that small ore pipes occur along the strike of anticlinal folds averaging 0.3 to 3.00 percent WO_3. It is estimated that up to 1,100 units of WO_3 are distributed in 8 ore shoots, but it is considered that in the aggregate the small individual targets do not justify the applicant's exploration program, and that the probability of making a significant discovery is poor. The Field Team recommends that the application for exploration assistance be denied.

The Commodity Specialist of the Bureau of Mines concurs with the conclusions and recommendations of the Field Team. The Geological Survey Specialist concurs, but suggests denial without prejudice.

W. S. Martin, Director
Division of Iron and Ferro-Alloys

WSMartin/esf - 7/30/57
cc to: Docket
Code 400
Admr. Read. File

July 25, 1957

DMEA Project No. 4696
DMEA Contract No.
Commodity Tungsten
Name of applicant Richard A. Glenn
Name of property Bright Mars. Nos. 1 & 2 Claims
Location of property Tulare County, Calif.
Estimated cost of project

W. S. Martin, Chief, Iron and Ferroalloys Division - DMEA
Through: Chief, Br. of Ferrous Metals and Ferroalloys

R. W. Holliday, Commodity Specialist, Br. of Ferrous Metals and Ferroalloys

Review of **Field Team Report of Examination**
(Report of Field Team Report, etc.)

1. Date of project has mark: 7/5/57 2. Date received by DMEA: 7/22/57

3. Other reports on the property known to reviewer: Yes [ ] No [X]

4. Other reports on mining preparation known to reviewer: Yes [ ] No [X]

5. Information available on past production: Yes [ ] No [X]

6. Other pertinent factors known to reviewer: Yes [ ] No [X]

7. Explain items marked yes above:

8. Factors meeting special consideration:
a. Location [ ]
b. Ownership [ ]
c. Evidence of mineralization [ ]
d. Geology [ ]
e. Proposed exploration method [ ]
f. Alternate exploration method [ ]
g. Costs [ ]
h. _____ [ ]

9. Action taken:
a. Obtain information from applicant [ ]
b. Refer to Field Team [ ]
c. Denial [X]
d. Agree with Field Team [X]
e. Disagree with Field Team [ ]
f. Support alternate plan [ ]
g. Request another examination [ ]
h. Approval [ ]
i. Consult with Mr. _____ at _____ AEC office.

10. Remarks: (Use back of page if necessary)

R. W. Holliday

R. W. Holliday

OFFICIAL FILE COPY
DMEA
JUL 23 1957

INITIALS	CODE
P.K.	220
WSM	400

IN REPLY REFER TO:

UNITED STATES
DEPARTMENT OF THE INTERIOR
GEOLOGICAL SURVEY
WASHINGTON 25, D. C.

July 22, 1957

Memorandum

To: W. S. Martin, Defense Minerals Exploration Administration

From: W. P. Williams, U. S. Geological Survey

Subject: Review of field examination report, DMEA 4696 (tungsten), Richard A. Glenn, Bright Mars Claims, Tulare County, Calif.

The DMEA examing team report that conditions on the applicant's property are not good for the presence of large tungsten ore bodies.

The ore bodies, in the form of small pipes, bear 0.3 to 3 percent WO_3: The pipes are typically 4 feet by 1 foot in cross section. The examiners estimate that the largest ore shoot might yield 900 tons of 1 percent ore. The rest of the ore in the small shoots would not total up to a significant tonnage. No ore has been mined on the property.

According to the report, concentrations of WO_3 appear to be mostly confined to narrow zones where small folds cross tactite beds. Those zones form small, very difficult targets. The mineralized zones are considered by the examining team to be too small to justify Government participation in their exploration.

After studying the report, I agree with the examining team's recommendation for denial of the application. The examiners further recommend that the property be re-considered if further work by the applicant looked promising. Under those conditions a denial by DMEA probably should be without prejudice.

W. P. Williams

W. P. Williams

DMEA

UNITED STATES
DEPARTMENT OF THE INTERIOR
DEFENSE MINERALS EXPLORATION ADMINISTRATION
1605 Evans Avenue
Reno, Nevada

July 10, 1957

Memorandum

To: Operating Committee, DMEA, Interior Building
Washington 25, D. C.

From: Executive Officer, DMEA Field Team, Region II

Subject: Docket No. DMEA-4696 (Tungsten
Richard A. Glenn
Bright Mars. Nos. 1 and 2 Claims
Tulare County, California
(Your letter, April 15, 1957)

Enclosed are three copies of a report on subject property by J. D. Warne, Bureau of Mines, and P. F. Taylor and R. G. Reeves, Geological Survey.

Roscoe Smith and I concur in the recommendation that the request for an exploration loan be denied.

S. Ricker

Attachments

Reviewed by
DMEA OPERATING COMMITTEE
7-17-57
(date)

On-site

OFFICIAL FILE COPY
DMEA
RECEIVED JUL 12 1957

DATE	INITIALS	CODE
7/12	C	220
7/18	C	130
7/18	WSM	220
		400

BUREAU OF MINES
WASHINGTON, D. C.

JUL 12 11 04 AM '57

OFFICIAL FILE COPY
DMEA
RECEIVED JUL 12 1957

DATE	INITIALS	CODE
		130
		220

UNITED STATES
DEPARTMENT OF THE INTERIOR
FRED A. SEATON, SECRETARY

DEFENSE MINERALS EXPLORATION ADMINISTRATION

REPORT OF EXAMINATION BY FIELD TEAM
REGION II

APPLICATION REPORT

DMEA-4696 (Tungsten)
Mr. Richard A. Glenn
Bright Mars claims 1 and 2
Tulare County, California

by

J. D. Warne
U. S. Bureau of Mines

P. F. Taylor and
R. G. Reeves
U. S. Geological Survey

July 5, 1957

Reviewed by
DMEA OPERATING COMMITTEE
7-17-57
(date)

CONTENTS

	Page
Introduction	1
Conclusions and Recommendations	1
Location and Accessibility	2
Property and Ownership	3
History, Production, and Development	4
Geology	5
Ore Deposits	6
Sampling	8
Ore Reserves	9
Exploration	9

ILLUSTRATIONS

Figure 1 . . . . . Index map

2 . . . . . Geologic map

3 . . . . . Bright Mars prospect

INTRODUCTION

Mr. Richard A. Glenn, 5731 N. Loma, Temple City, California, applied as a partnership to the Defense Minerals Exploration Administration, docket DMEA-4696, for Government assistance in a $45,323.65 program to explore for tungsten on the Bright Mars Nos. 1 and 2 claims, Tulare County, California. The applicant wishes to explore for the downward continuations of scheelite ore zones exposed at the surface on the Bright Mars No. 1 claim by underground drifting and crosscutting, and to construct 4,700 feet of access roads to the worksite.

A field examination was requested by the Operating Committee and was made by R. G. Reeves and P. F. Taylor, U. S. Geological Survey, and J. D. Warne, U. S. Bureau of Mines, on May 1 and 2, 1957, accompanied by the applicants, and by R. M. Smith and P. F. Taylor on June 29, 1957. Topographic and geologic maps submitted by the applicant were checked and supplemented by the examiners, rock exposures were lamped, and samples were taken of the scheelite-bearing zones.

CONCLUSIONS AND RECOMMENDATIONS

Small ore pipes bearing 0.3 to 3 percent WO_3 in scheelite, typically 4 feet by 1 foot in cross section, are interspersed in a

tactite zone 600 feet thick for nearly 400 feet along the strike where small anticlinal folds cross relict beds in the tactite. As much as 1,100 units of WO_3 are distributed in eight ore shoots, including one which might yield 900 tons of 1 percent ore, but it is considered that the aggregate of small individual targets typically containing a few tens of tons of ore do not justify the applicant's exploration program, and that the probability of a significant discovery of tungsten ore is poor. It is therefore recommended that Government assistance under the DMEA program be denied.

LOCATION AND ACCESSIBILITY

The Bright Mars Nos. 1 and 2 claims are in Sequoia National Forest, about 20 miles north of Kernville, California, and 1.5 miles northeast of the confluence of Brush Creek and the Kern River, in sec. 30, T. 22 S., R. 33 E., and sec. 24, T. 22 S., R. 32 E., M.D.B.&M., Tulare County, California (fig. 1). The claims are at an altitude of approximately 3,000 feet.

The property is reached from Kernville by paved highway 20.7 miles northward up Kern River Valley, then 3.3 miles of Forest Service improved dirt road, with a 15 percent average grade, leading northeastward up Brush Creek from the Kern River. The Forest Service road log follows:

1. Northeast from paved highway along Brush Creek 0.0 miles

2. Take right fork (left fork is under construction) @ 2.0 miles

3. Take left fork; continue up steep grades @ 2.3 miles

4. Road under construction joins from left @ 2.6 miles

5. Continue along Forest Service road to property @ 3.3 miles

The Forest Service road will eventually be accessible throughout the year for ordinary passenger vehicles.

PROPERTY AND OWNERSHIP

The property consists of two unpatented mining claims (fig. 2) recorded at Visalia, Tulare County, California, as follows:

Claim Name	Date Recorded	Book	Pages	Document Number
Bright Mars No. 1	12/5/56	1961	134-135	36385
Bright Mars No. 2	12/5/56	1961	132-133	36384

Ownership of the property consists of a partnership of:

Richard A. Glenn (managing partner)
5731 N. Loma, Temple City, California

Donald R. Hembre
3720 Nicolet, Los Angeles 16, California

C. J. Leith
8906 Mills Avenue, Whittier, California

Francis X. LoJacono
9313 S. Laurel, Whittier, California

Three of the applicants (Glenn, Hembre, and Leith) are geologists with oil companies and Glenn is also a civil engineer. None has had previous mining experience; but they are financially responsible and are considered to be capable of managing and properly reporting the progress of their proposed project.

HISTORY, PRODUCTION, AND DEVELOPMENT

The claims were originally located about 1942 as the Brush Creek group by Mr. S. D. Crotensberg. The locations were later allowed to lapse. The claims were relocated as the Bright Mars group by the present owners, with the consent of Mr. Crotensberg, on December 5, 1956.

Several old shallow prospect holes from 2 to 6 feet deep were dug about 700 feet northwest of the top of a hog back on Bright Mars No. 1 claim to explore tungsten and molybdenum croppings near the northern end of a broad tactite zone (fig. 2). The present operators have recently excavated an open cut about 15 feet long and 10 feet deep near the center of this claim. Only a shallow prospect hole exists at the discovery monument on the Bright Mars No. 2 claim.

No mining equipment is on the property, and no production has been made.

GEOLOGY

The mining claims are on the front slope of a northwest-trending erosion escarpment underlain by thick-bedded marble overlying phyllite and schist of the Kernville series. The metamorphic rocks dip 45° NE, and are cut off 500 feet to the east by the north-south Kern Canyon fault, and on the west by Isabella granodiorite. A tactite zone in interbedded marble and schist borders the concordant igneous contact for 3,000 feet. The section consists of 235 feet (maximum thickness) of blue-gray, medium-grained, crystalline marble, 215 feet of gray-brown quartzose schist grading locally to a flaggy gray phyllite, containing N 30° W lineations of andalusite, and a tactite zone 600 feet thick, composed of prominent red-brown calcium garnet bands one-half inch to 15 inches wide, interlayered with limestone lenses 2 to 5 inches wide. The garnetiferous ridges in the weathered tactite show the regional N 30° W strike, but are cross-folded and increasingly distorted toward the igneous contact. A fine-grained micaceous diorite and a friable buff-colored quartz monzonite, both facies of the Isabella granodiorite, border the metasediments to the west, and apophyses 1 to 2 feet wide have penetrated the tactite locally along northwest-striking fractures.

A left lateral fault, striking N 75° W and paralleling a ravine which cuts through the escarpment at the north end of the property, and with a near vertical dip, has displaced the northern tip of the tactite zone 1,500 feet to the west.

ORE DEPOSITS

A brown, knotty tactite has replaced the marble beds, and occasionally phyllite interbeds for 3,000 feet along the granodiorite contact in a N 30° W bedding zone 600 feet thick. Minerals are coarse grossularite, fine- to medium-grained epidote and diopside, and fibrous wollastonite. Scheelite is distributed throughout most of the tactite in concentrations of a few hundredths of a percent or less but principally in four bedding zones 5 to 15 feet thick in the upper 325 feet of the tactite. The heaviest concentrations occur where the beds are crumpled by anticlinal folding whose axis strikes N 60° - 65° W across the bedding planes.

Ore occurs in a northern and a southern zone as pipes plunging S 50° E, -35°, where host beds are distorted by cross folding, in the northern fifth of the 3,000-foot long tactite zone. The remainder of the tactite zone contains scattered scheelite, evenly distributed except for a few small concentrations.

The northern zone is 400 feet south of the faulted northern border of the tactite and trends N 60° W parallel with the cross structure. The zone is 15 feet wide and includes three small ore pipes from 2 to 3 feet wide and 4 to 15 feet long that average about 1 percent WO_3, separated by layers that average 0.01 to 0.05 percent WO_3. The first body is exposed at cut B where a 15-inch layer bearing scheelite, powellite, and molybdenite, and containing 4 to 5 percent WO_3 parallels the bedding. The anticlinal folding is 12 inches deep and strikes N 60° W with a slight plunge to the southeast. Fifty feet on the N 60° W strike from cut B, a layer 2 feet thick estimated to contain 1 percent WO_3 for a length of 4 feet crops out. One hundred and twenty feet further N 60° W from this point, a layer 2.2 feet wide and 4 feet long averaging 1 percent scheelite with powellite is exposed at cut A. The folding here is more intense and 3 to 4 feet deep. Quartz stringers in the folds strike N 50° W.

The southern ore zone is sub-parallel to and 250 feet southwest of the northern zone and is exposed at cut C. Here a shear zone 15 inches wide that strikes N 25° W and dips about 70° SW contains 0.3 percent scheelite, some powellite and molybdenite, and one-half inch quartz stringers. Garnet layers

in outcrops northeast of the pit show isoclinal folding striking N 55° W. Scheelite estimated to average 0.3 percent in layers up to 18 inches wide appears in a sequence of outcrops S 60° E from cut C for a distance of 200 feet. Intense cross folding with sporadic scheelite clusters a few inches across occurs 100 feet northwest of the pit.

Scheelite was deposited in small concentrations along the bedding planes when the tactite first replaced the carbonate rocks and later in economic concentrations following formation of the tactite where folds cross the host beds.

SAMPLING

Five samples were taken of the scheelite-bearing zones (fig. 3).

Sample No.	Percent WO_3	Description
1	0.27	1.3 ft. channel across scheelite zone in lower open cut.
2	0.63	2.4 ft. chip sample across scheelite zone at surface 10 ft. from cut A.
3	4.53	1.3 ft. chip from surface above upper cut.
4	0.29	1.1 ft. chip sample across outcrop.
5	0.01	2.5 ft. channel across bottom of upper pit showing small amounts of scheelite and molybdenum.

ORE RESERVES

The northern zone is inferred to contain approximately 1,000 tons of 1 percent WO_3 ore in three small pipes 15 feet by 3 feet, 4 feet by 2 feet, and 4 feet by 2 feet in cross section and 200, 150, and 100 feet deep. The southern zone is inferred to contain about 150 tons in three smaller shoots. The area surrounding and between the zones contains specks of scheelite estimated by lamping to contain 0.01 to 0.05 percent WO_3.

EXPLORATION

The applicant proposed to drive two separate crosscut adits northeasterly from the west slope of the ridge on Bright Mars No. 1 claim to intercept the mineralized zones exposed at cuts A and B and inferred to continue along southeast-trending bedding zones at intervals of 25 to 75 feet respectively below the surface. Also, 100 feet of drifting from the terminal of each adit was requested to explore these zones. In addition, about 4,700 feet of access roads to the adit sites were proposed, and two storage bins. The total estimated cost of the proposed work was $45,323.65.

The WO_3 concentrations in surface exposures in the bedding zones southeast of the cuts falls off sharply to a few hundredths of a percent and there is only small geologic indication that

significant tungsten concentrations will extend along bedding planes at depth. Concentrations of above 0.3 percent appear to be confined almost entirely to narrow zones where small folds cross the replaced tactite beds, and these targets are considered to be too small to justify Government participation in their exploration.

Some indication that the folded structure may be better developed at depth is seen in the deepening of folds toward the granodiorite contact. In addition, it is at least possible that larger WO_3 concentrations may exist in bedding zones at depth, as suggested by a single occurrence of 1 percent scheelite 4 feet long and 1 foot wide in a bed not apparently cut by folds at point D. Accordingly, the applicant is encouraged to explore these possibilities by trenching and to re-apply for DMEA assistance if a larger exploration target should be revealed.

UNITED STATES DEPARTMENT OF THE INTERIOR
GEOLOGICAL SURVEY

DMEA-4696
(Tungsten)

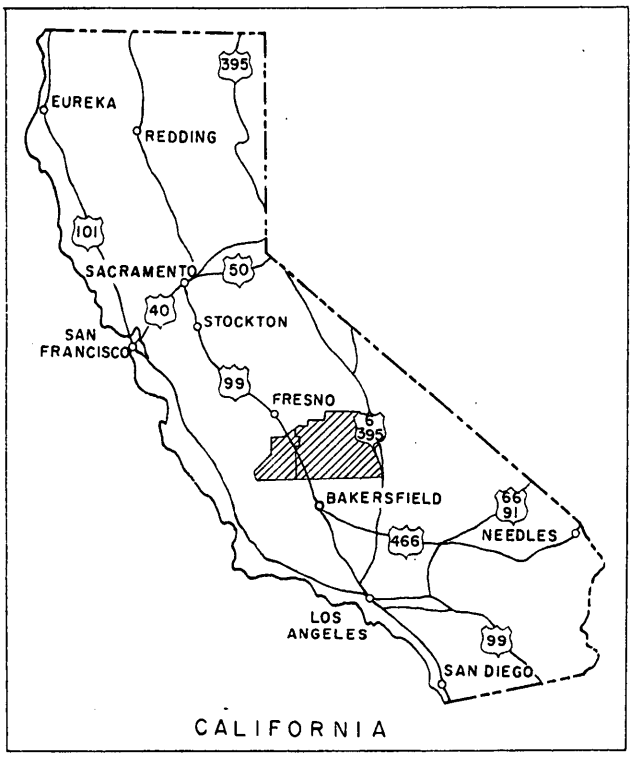

N

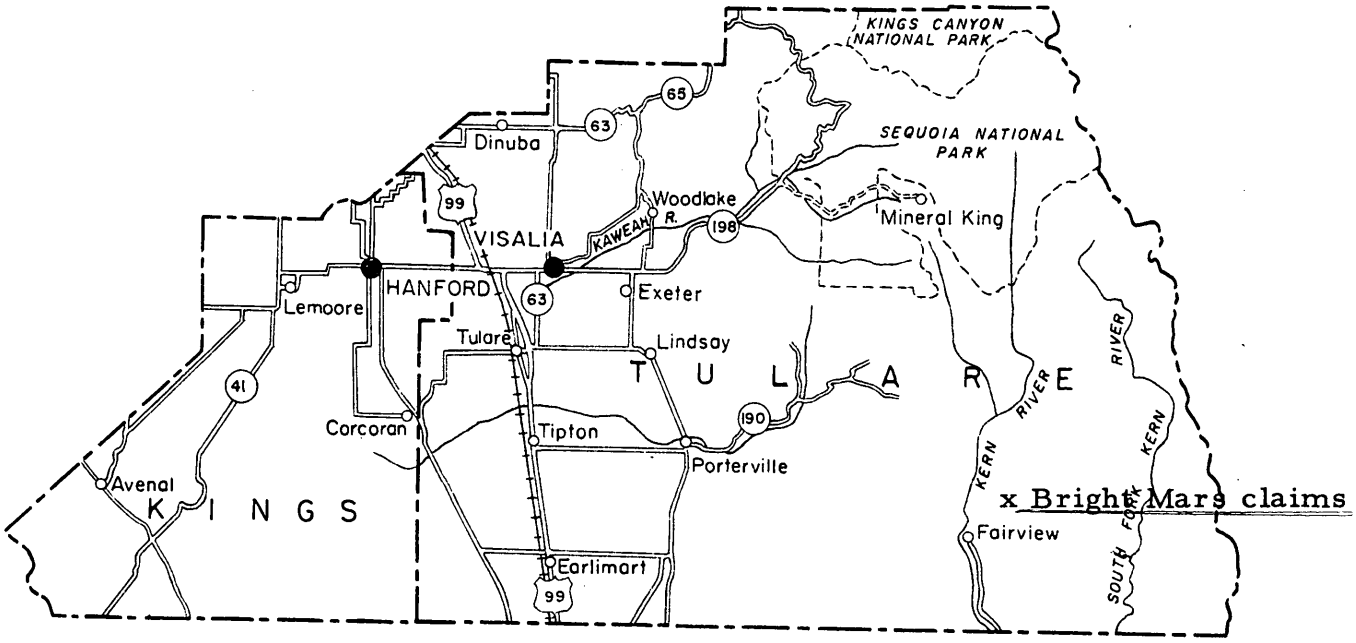

Figure I. INDEX MAP OF KINGS AND TULARE COUNTIES, CALIFORNIA

0 20 40 60 Miles

OFFICIAL FILE COPY
DMEA
RECEIVED JUL 12 1957

DATE	INITIALS	CODE

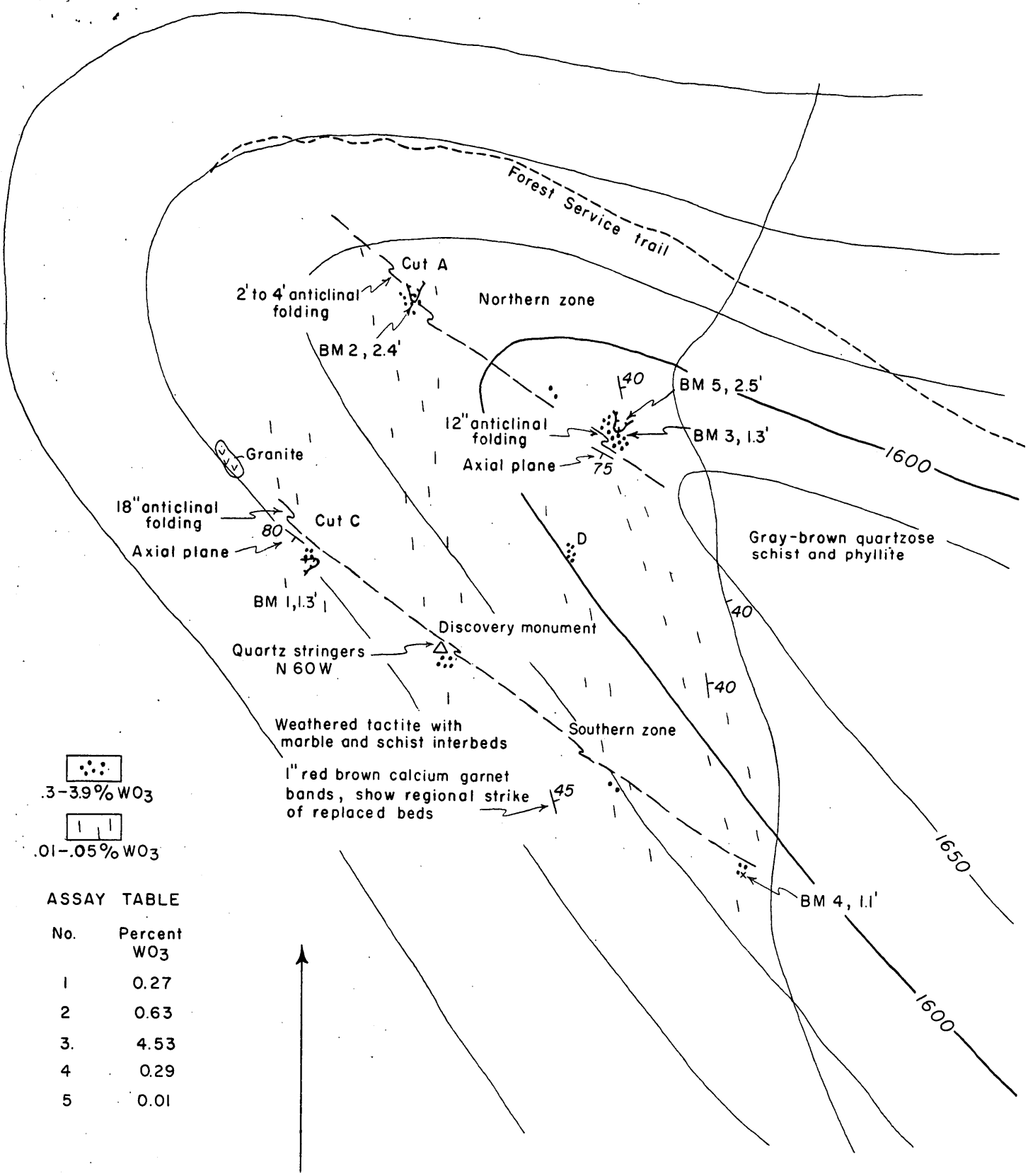

ASSAY TABLE

No.	Percent WO_3
1	0.27
2	0.63
3.	4.53
4	0.29
5	0.01

Figure 3. BRIGHT MARS PROSPECT, TULARE COUNTY, CALIFORNIA

100 0 100 200 Feet

Contour interval 50 feet

OFFICIAL FILE COPY
DMEA
RECEIVED JUL 12 1957

DATE	INITIALS	CODE

DMEA Form 7
(12-56)

OFFICIAL FILE COPY

Date	Surname	Code
4/12	Chapman	400
4/12	Martin	400
4/15	Selfridge	130
"	Johnson	110
"	Matteyson	100
4/16	CO	220
		400

APR 15 1957

Mr. Spangler Picker, Executive Officer
DMEA Field Team, Region II
1605 Evans Avenue
Reno, Nevada

Re: Docket No. DMEA 4696 - Tungsten
Richard A. Glenn
Bright Mars Nos. 1 and 2 claims
Tulare County, California

Dear Mr. Picker:

The above docketed application for exploration assistance is being referred to your office for a field examination of the property.

Copies of memoranda dated March 27, and April 2, 1957, by H. B. Nelson, Geological Survey, and R. W. Holliday, Bureau of Mines, respectively, relating to the project are enclosed. Also enclosed is an extra copy of the application for the use of the Field Team.

On page 14 of the application, the last paragraph mentions Mr. Norman Whitmore, Engineer of Mines, Minerals Engineering Company, 417 South Hill Street, Los Angeles, California. We would be interested to hear, if such information is available, whether this company has any connection with the Minerals Engineering Company of Grand Junction, Colorado.

Sincerely yours,

George C. Selfridge

Chairman, Operating Committee (2/B)

APPROVED:

Frank D. Lamb (2/B)
Member, Bureau of Mines

Thor H. Kiilsgaard (2/B)
Member, Geological Survey

TLChapman:am 4-12-57
cc to: Docket
Code 400
Admr. Read. File
Oper. Comm.
FT REG II
Messrs. R. Holliday, USBM
T. Kiilsgaard, USGS

8623

DMEA Form 7
(12-56)

OFFICIAL FILE COPY

Date	Surname	Code
4/12	Chapman	400
4/12		400
4/15	Selfridge	130
"	Inman	110
"	Mittendorf	100
		220

APR 15 1957

Mr. Richard A. Glenn
5731 North Loma
Temple City, California

Re: Docket No. DMEA 4696 - Tungsten
Bright Mars Nos. 1 and 2 claims
Tulare County, California

Kilsgaard

Dear Mr. Glenn:

The above docketed application for exploration assistance for tungsten ores has been reviewed by the Iron and Ferro-Alloys Division of the Defense Minerals Exploration Administration, and referred to Mr. Spangler Ricker, Executive Officer, DMEA Field Team, Region II, 1605 Evans Avenue, Reno, Nevada, for a field examination of the property.

Any assistance you can give the members of the Field Team will be appreciated.

Sincerely yours,

C. O. Mittendorf (for)

Administrator

TLChapman:am 4-12-57
cc to: Docket
Code 400
Admr. Read. File
Oper. Comm.
FT REG II
Messrs. R. Holliday, USBM
T. Kiilsgaard, USGS

8623

OFFICIAL FILE COPY DMEA RECEIVED APR 10 1957		
DATE	INITIALS	CODE
4/10	JWD	220
4/10	WSM	400

April 8, 1957

DMA Project No. 4696
DMA Contract No.
Commodity Tungsten
Name of applicant Richard A. Glenn
Kind of property
Location of property
Estimated cost of project

W. S. Martin, Chief, Iron and Ferroalloys Division-DMEA
Through: Chief, Br. of Ferrous Metals & Ferroalloys
R. W. Holliday, Commodity Specialist, Branch of Ferrous Metals & Ferroalloys

Application

1. Date received 3/16/57 2. Date completed 4/2/57
3. Does property lease to review: Yes [ ] No [x]
4. Does project lease to review: Yes [ ] No [x]
5. Does applicant produce on post production: Yes [ ] No [x]
6. Does applicant have term lease to review: Yes [ ] No [x]
7. Explain items which you choose:

8. Factors meeting special consideration:
a. Location [ ]
b. Capacity [ ]
c. Evidence of rehabilitation [x]
d. Courtesy [ ]
e. Proposed exploration method [x]
f. Alternate exploration method [ ]
g. Costs [ ]
h. _____ [ ]

9. Action on request:
a. Obtain information from applicant [ ]
b. Refer to Field Team [x]
c. Approve [ ]
d. Approve with Field Team [ ]
e. Cancel or deny [ ]
f. Disagree with Field Team [ ]
g. Suggest alternate plan [ ]
h. Request another examination [ ]
i. Approval [ ]

_____ at _____ ASC office.

10. Remarks: (Use back of page if necessary) Field Team confirmation and recommendations should be obtained.

R. W. Holliday

UNITED STATES
DEPARTMENT OF THE INTERIOR
GEOLOGICAL SURVEY
WASHINGTON 25, D. C.

IN REPLY REFER TO:

OFFICIAL FILE COPY
DMEA
RECEIVED MAR 28 1957

DATE	INITIALS	CODE
3/28	C	220
3/28	WSM	400

March 27, 1957
DMEA 4696
Richard A. Glenn
Bright Mars Group
Tulare County, Calif.
$45,323.65 - Tungsten

Memorandum

To: E. S. Martin, Defense Minerals Exploration Administration

From: N. E. Nelson, U. S. Geological Survey

Subject: Review of application

The applicant requests assistance in exploring by underground work a wide tactite zone. Preliminary work includes road work and orebin construction. As there is no equipment on the prospect, the cost of mining plant is included in the request for assistance.

Apparently but one sample has been taken and assayed, testing by mineral lite having been depended upon.

Referral of the application to the Field Team for appropriate action is recommended.

N. E. Nelson

N. E. Nelson

UNITED STATES
DEPARTMENT OF THE INTERIOR
Defense Minerals Exploration Administration
Washington 25, D. C.

March 23, 1957

Mr. Richard Glenn
5731 N. Lona
Temple City, California

Subject: DMEA-1696
Re: Exploration Assistance

Dear Mr. Glenn:

Your application for exploration assistance, dated March 16, 1957 submitted to our office at Reno, Nevada has been assigned Docket Number DMEA-1696 and referred to the Iron & Ferro Alloys Division in the Washington office. Kindly identify all future correspondence relating to your application by this Docket Number.

Sincerely yours,

Allen S. Dakan, Chief
Operations Control and
Statistics Division

Copy to: Region II

3571

The New Jersey Zinc Company

DMEA Application

~~Hunter Area~~

~~Louisa County, Virginia~~

Contents:

1. Covering Letter
2. Application

UNITED STATES DEPARTMENT OF THE INTERIOR
GEOLOGICAL SURVEY

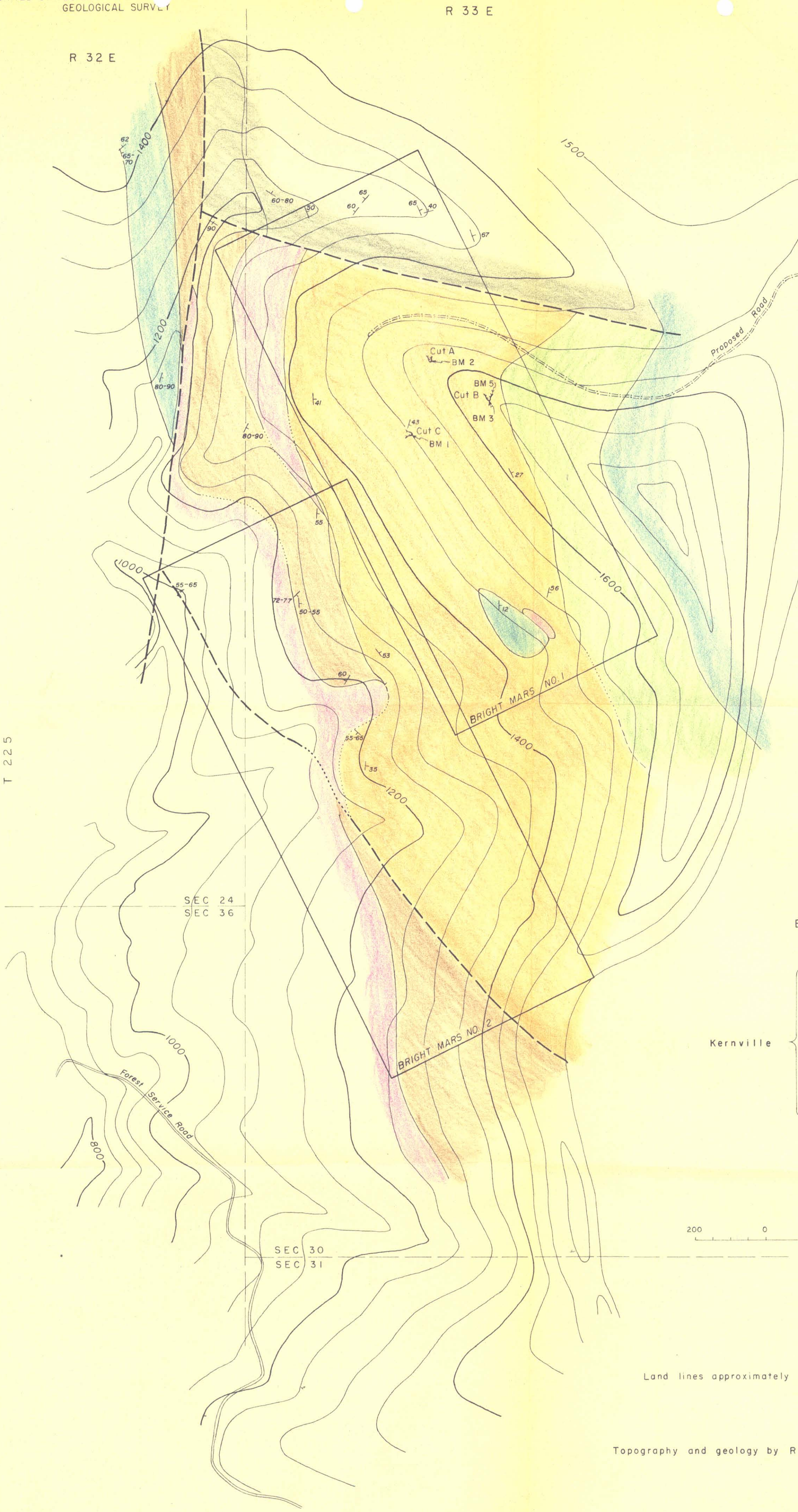

Figure 2. BRIGHT MARS CLAIMS, TULARE COUNTY, CALIFORNIA

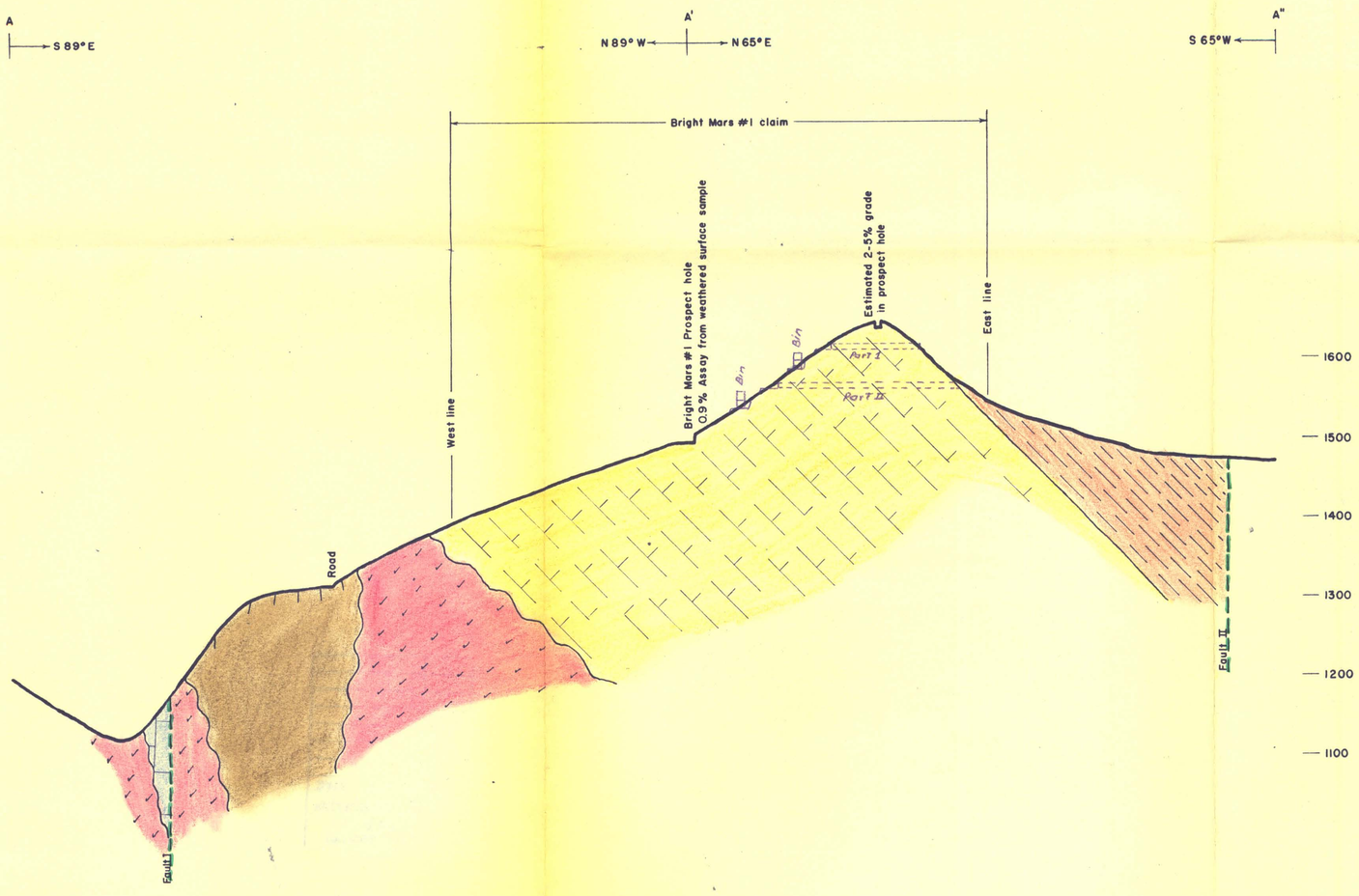

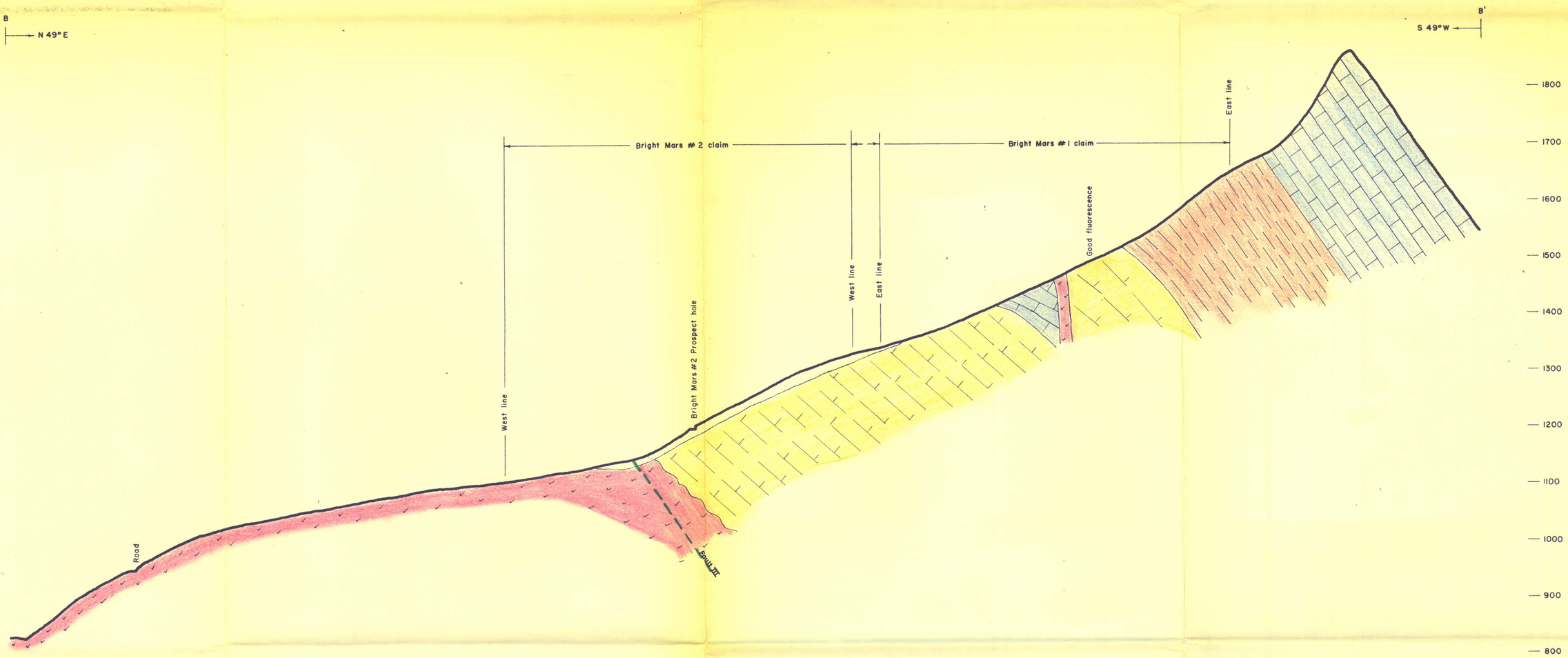

LEGEND

- Marble
- Schist
- Tactite
- Hornfels
- Granodiorite and monzonite

SCALE 1 inch = 100 feet

CROSS SECTIONS A-A'-A" AND B-B'

Bright Mars #1 and Bright Mars #2 Mining Claims

Tulare County, California

February 9, 1957

R. A. Glenn, D. R. Hembre, C. J. Leith, and F. X. LoJacono

GEOLOGIC MAP

Bright Mars #1 and Bright Mars #2 Mining Claims (Lode)

Tulare County, California

February 9, 1957

R. A. Glenn, D. R. Hembre, C. J. Leith, and F. X. LoJacono