DEFENSE MINERALS EXPLORATION ADMINISTRATION
CONTRACT ADMINISTRATION AND AUDIT DIVISION

REPORT OF ROYALTY REVIEW

I have reviewed the files of the Executive Officer, DMEA Field Team, Region III, Denver, Colorado, pertaining to Contract Idm-E278, Docket No. DMEA-2296, dated March 17, 1952, with

Joseph M. Smith
Charles R. Rugg
Nederland, Colorado

for the purpose of determining the amount of royalties due the U. S. Government on the sales of tungsten from property referred to as the Rambler and Missing Link Lode Mining Claims, located in Boulder County, Colorado, during the period March 17, 1952 to February 21, 1957.

A certification of discovery or development was issued on March 15, 1954, and, in accordance with the contract, royalty is payable on the net smelter returns or other net proceeds realized from production as a result of such discovery or development during a maximum period of 10 years from the date of the contract. A final audit dated December 21, 1953, indicated accepted costs under the exploration contract amounting to $23,507.12, with the Government's contribution, on a 75 percent basis, being $17,630.34.

This review has been made in lieu of an on-site audit of the Operator's accounts and records for the following reasons:

(a) The Examining Engineer is of the opinion that all sales of ore produced during the period March 17, 1952 to February 21, 1957, for which settlement sheets have been released, have been properly accounted for.

(b) The administrative cost to the Government of an on-site royalty audit at this time would be excessive in relation to the amount of possible additional royalty which might be disclosed.

The review established the total sales of tungsten ore and concentrates for this period to be $23,712.89. Royalty due the U. S. Government at the contract rate of 5 percent is $1,185.64. The royalty paid and the balance due are as follows:

Total Royalty Due	$1,185.64
Total Royalty Paid	1,185.64
Balance of Royalty Due	$ 0.00

OFFICIAL FILE COPY
D M E A
RECEIVED FEB 28 1957
DATE | INITIALS | CODE

T. H. Brading, Auditor

February 21, 1957

EXTRA COPY
DMEA
RECEIVED FEB 28 1957

Check Sheet of Examining Engineer

	DATE	INITIALS	CODE

Operator's Name Jos. M. Smith
Charles R. Rugg

Address Nederland,

Colorado

Exploration Contract No. Idm-E278

Docket No. DMEA-2296

		Check One Yes	Check One No
1. (a)	Does the Operator stockpile ore subject to royalty repayment?		X
(b)	If so, is segregation and identification procedure adequate?		
2. (a)	Does Operator commingle production subject to DMEA royalties with exempt production?		X
(b)	If so, do you consider the allocation of the commingled production equitable?		
3. (a)	Does the Operator stockpile mine or mill rejects (low grade ore, tailing, middlings, etc.) that may have potential value within the royalty payment period?		X
(b)	If so, are adequate records maintained on such material to protect the Government's interest?		
4.	Do you consider the assay controls in effect are adequate?	—	—
5.	Do you consider that the manner of disposing of production gives the Government its fair royalty returns?	X	
6.	Do your periodic examinations of operations indicate the Operator is properly reporting his production of ores subject to DMEA royalties?	X	
7.	Does the Operator buy from or sell to other Operators?	—	—

8. Comment on any item 2 (b) to 6 if answer is No.

Subject property is reported to have been inactive for 1 year, and no production is anticipated.

Date 2/21/57

D. E. Redmon
Mining Engineer
D. E. Redmon

MAR 4 1957

Mr. Thomas H. Brading
DMA Auditor
224 New Customhouse Building
Denver 2, Colorado

Re: Report of Royalty Review
Idu-F27E, DMA-2296
Joseph M. Smith & Charles R. Rugg

Dear Mr. Brading:

Receipt is acknowledged of your Report of Royalty Review covering the above-cited project.

The Report of Royalty Review is acceptable and normal distribution is authorized.

Sincerely yours,

(Signed) J. L. Chambers

Jay L. Chambers, Chief
Contract Administration
and Audit Division

WBorovies/wb
March 4, 1957

Copy to: Docket
Admr. Reading File
Mr. Chambers

For Certificate of Deposit No. 28, dated September 15, 1954, giving royalty repayment of $177.85, see E-4.

UNITED STATES
DEPARTMENT OF THE INTERIOR
DEFENSE MINERALS EXPLORATION ADMINISTRATION
WASHINGTON 25, D. C.

DEPARTMENT OF THE INTERIOR
Defense Minerals Administration
RECEIVED
FEB 17 1954

224 New Customhouse
Denver 2, Colorado

February 15, 1954

Memorandum

To: T. A. Christensen

From: Executive Officer, DMEA Field Team, Region IV

Subject: Royalty-Smith and Rugg, Contract No. E278, Docket No. DMEA 2296, Colorado

Enclosed is copy of Acceptance and Invoice covering Lot No. 1, for ore shipped by Smith and Rugg.

Also enclosed is check in the amount of $726.40 in payment of royalty.

W. H. King

Enclosures

es

cc: Royalty File
Sec. to the Oper. Comm. w/enc. inv.
Traver w/enc. inv.
Chron.

For Schedule of Collections No. DMA-C-98, dated February 16, 1954, giving royalty repayment of $726.40, see E-340.

E-278

For Schedule of Collections No. BMA-C-33, dated September 28, 1953, giving royalty repayment of $281.39, see E-54.

DEFENSE MINERALS EXPLORATION ADMINISTRATION
CONTRACT ADMINISTRATION AND AUDIT DIVISION

AUDIT CERTIFICATE

I have examined the records and transactions of:

Joseph M. Smith
Charles R. Rugg
Nederland, Colorado

pertaining to Exploration Contract Idm-5278, Docket No. DMEA 2296 including Amendments one to five, covering a project of exploration for tungsten, located in Boulder County, Colorado, commonly known as the Rambler Mine, for the period April 7, 1952 to September 26, 1953, including a recess from December, 1952 to April 15, 1953, and subsequent settlement on November 13, 1953.

My examination was made in accordance with generally accepted standards applicable in the circumstances.

The audit disclosed the following facts in regard to the amount to be paid the Contractor:

Total Cost per MF-104		$24,133.57
Proceeds from Property Disposition		434.45
Adjusted cost		$23,699.12
Exceptions: (See Audit Report for Details)		
During this Audit	$192.00	
Prior to this Audit	-	192.00
Total Accepted cost		$23,507.12

The contract calls for a 75 percent participation of exploration expenses by the United States Government. Therefore, payment to the Contractor by the Government in the amount of Seventeen-Thousand Six-Hundred-Thirty and 34/100 Dollars

- $17,630.34 -

is valid and proper.

This certificate is issued on the provision that the Regional Executive Officer, the Administrator, or other competent official has accepted or will accept the project as having otherwise met the terms of the contract.

Dated: December 21, 1953

T. H. Brading, Auditor

AUDIT REPORT

I. INTRODUCTION

A final audit was made on December 1, 1953 (covering the period from April 7, 1952 to September 26, 1953 including a recess period from December, 1952 to April 15, 1953 and subsequent settlement on November 13, 1953) of the records and accounts of operations pertaining to Contract Idm-E278 and amendments one to five with:

Joseph M. Smith
Charles E. Rugg
Nederland, Colorado

covering a project of exploration for tungsten located in Boulder County, Colorado, commonly known as the Rambler Mine.

The accounting records under the contract are located in the offices of Wilkins and Schone, Certified Public Accountants, First National Bank Building, Boulder, Colorado. Prior to the audit approximately three days were spent in the office preparing preliminary schedules, etc. The cooperation of Mr. A. W. Schone greatly facilitated the audit.

II. GENERAL INFORMATION ON RECORDS

The accounting records consisting of a Cash Journal and General Ledger are maintained under the supervision of Mr. A. W. Schone, Certified Public Accountant.

The original invoices and payroll disbursements are recorded in a Cash Journal. The information reflected on the journal forms the basis for the preparation of the Monthly MF-104 Reports. Therefore, this audit involved in general a check of original invoices and payroll records against the journal and reconciliation with the amounts shown on the MF-104 accounts. Costs were recorded on a combination of cash and accrual basis.

III. SCOPE OF AUDIT AND FINDINGS

The audit was limited to ascertaining the accuracy, propriety and validity of the costs as shown in the "Totals to Date" column of Form MF-104, Operator's Monthly Report and Voucher, for the month of September, 1953. The extent of the audit and the findings under each of the "Items of Cost" follows:

(1) Independent Contracts

Not applicable to this contract.

(2) Labor and Supervision

All charges under this item were checked against the amounts recorded on the Cash Journal. In order to verify the labor time, rates and charges on a test basis, labor costs charged April, 1952 - September, 1952, March, 1953 and September, 1953, were checked back from the journal through the semi-monthly payroll summaries prepared by Mr. Schone from original time book approved by Mr. Smith.

Cost of Supervision was limited to salary of Joseph M. Smith, one of the partners. No record was maintained of the time Mr. Smith devoted to supervision, but the Examining Engineer, R. L. Bolmer, estimated that approximately half his time was devoted to duties ordinarily performed by one of the miners. This estimate is accepted as it appears to be conservative.

Charges properly allowable and chargeable as a cost of the project under terms of the contract and amendments are:

Labor	$12,551.70
Supervision	2,408.00

(3) Operating Materials and Supplies

All charges under this category were checked against the journal. An analysis was made to determine propriety of the items charged. All purchases for April, 1952 - September, 1952, March, 1953 and September, 1953, were verified against invoices.

The total costs properly chargeable and allowable under this category were found to consist of the following:

Timber		$123.27
Explosives		2,264.89
Pipe		118.12
Track		16.43
Miscellaneous:		
Gas and Oil	$1,553.61	
Hand Tools	94.36	
Drill Steel	602.87	
Miscellaneous	268.83	2,519.67
Total		$5,042.38

(4) Operating Equipment

Rental

All charges for rental of Operating Equipment were checked against the journal. No records showing the time subject equipment was in use were

maintained. The Examining Engineer's Narrative Reports indicated that the equipment was in use for the period charged. Proration of cost was made in the instance where equipment was used less than a full month. Details of equipment, rates and time for which charged is shown below:

Equipment	Monthly Rental	Period	Charge	
Diesel Generator	$75.00	April, 1952*	$ 56.25	
		May - Nov., 1952	525.00	
		April, 1953*	37.50	
		May - Aug., 1953	300.00	
		September, 1953*	66.33	
Total charge for Diesel Generator Rental - - - - - - - - -				$985.08
Pneumatic Pump	25.00	April, 1952*	18.75	
		May, 1952	25.00	
Total Pneumatic Pump Rental - - - - - - - - - - - -				$ 43.75
Centrifugal Pump (2)	25.00	May, 1952	50.00	
(1)		June - Nov., 1952	150.00	
(1)		April, 1953*	12.50	
(1)		May - Aug., 1953	100.00	
(1)		September, 1953*	22.12	
Total Centrifugal Pump Rental - - - - - - - - - - -				334.62
Total Pump Rental -				378.37
TOTAL RENTAL CHARGE - - - - - - - - - - - - - - - - - -				$1,363.45

Total rental charge of $1,363.45 is considered a proper and allowable charge under the terms of the contract.

*Proration charge.

Purchases

Invoice from Union Supply Company in the amount of $198.90 for purchase of jackhammer leg was examined. Purchase of this equipment was authorized by contract. Operator bid $110.00 for this item. Original price of $198.90 less bid of $110.00 equals $88.90, which amount is considered a proper and allowable cost to the project under the terms of the contract.

Depreciation

As with equipment rentals, log or record of time company equipment was used was not maintained. Periods used were verified by Examining Engineer's Narrative Report. Rates are in agreement with those specified in the contract. Description of equipment, periods used and allowable rates are shown below:

Equipment	Period	Rate	Amount	
Compressor	April, 1952*	$25.00	$ 18.75	
	May - Nov., 1952		175.00	
	April, 1953*		12.50	
	May - Aug., 1953		100.00	
	September, 1953*		22.12	
Total depreciation - Compressor - - - - - - - - -				$328.37
Jackhammer Leg	April, 1952*	5.00	3.75	
	May - Nov., 1952		35.00	
	April, 1953*		2.50	
	May - Aug., 1953		20.00	
	September, 1953*		4.44	
Total depreciation - Jackhammer Leg - - - - - - - -				65.69
Dump Truck	April, 1952*	10.00	7.50	
	May - Nov., 1952		70.00	
	April, 1953*		5.00	
	May - Aug., 1953		40.00	
	September, 1953		8.84	
Total depreciation - dump truck - - - - - - - - - -				131.34
Total depreciation -				$525.40

Total depreciation charged in the amount of $525.40 is considered proper and allowable charge to project under the terms of the contract.

*Prorata charge.

(5) Initial Rehabilitation and Repairs

Charges for repairs to Hoist House as listed below were verified by examination of suppliers invoices and payroll charges:

Supplies	$31.44
Labor	33.40
Total	$64.84

Total of $64.84 is considered a proper and allowable charge to the project under the terms of the contract.

(6) New Buildings and Improvements

Not applicable to this contract.

(7) Miscellaneous

Invoices covering charges for repairs to equipment were examined as to propriety and validity. Analysis of charges are shown below:

Compressor	$234.04
Pump	27.50
Truck	76.74
Hoist	33.59
Jack Hammer	28.10
Total Allowable Cost	$399.97

Invoices for $4.00 and $11.00 for sampling and analysis were examined.

All charges for Social Security Taxes and Insurance were checked by computation at the rates shown by the company's files to be in effect. These rates were:

Social Security Tax	1.5
Workmen's Compensation Insurance:	
April, 1952 through March, 1953	$2.95
April, 1953 through September, 1953	2.09

In April, 1952 a deposit of $100.00 for Workmen's Compensation Insurance was made and in May, 1953, another deposit of $42.00 was made. These amounts were charged as costs to the project. As the amounts in question definitely are deposits and not payments for premiums they are disallowed.

A charge of $50.00 per month is made for bookkeeper. In September, 1953 a charge of $100.00 was made for accountant's services. As the amount of $50.00 per month is an allowable maximum under the contract $50.00 is accordingly disallowed.

A charge made by Hodgson Transfer Company in the amount of $12.88 for moving equipment was verified by examination of invoice.

IV. CONCLUSIONS

On October 31, 1953, the operator submitted two bids, in addition to his own, covering equipment, material and supplies in which the Government has an equity. Inasmuch as the contractor's bid was the most favorable it was accepted by the Executive Officer, Region IV, on November 13, 1953.

This audit has disclosed that all costs as charged to this project with the exception of item under Item (7) Miscellaneous, and giving consideration to disposal of property in which Government has an equity, are reasonable and proper under the terms of the contract.

The adjustments between Items of Cost as shown on the September MF-104, the recommended disallowances, disposal of property in which the Government has an equity, and approved amounts are summarized as follows:

	Totals Sept. MF-104	Distribution Corrected	Disallowed by Audit	Property Disposal	Allowed by Audit
(1)Independent Contract					
(2)Labor & Supervision					
Labor	$10143.70	$12551.70			$12551.70
Supervision	4816.00	2408.00			2408.00
(3)Operating Material & Supplies					
Timber	56.33	123.27			123.27
Explosives	2263.65	2264.89			2264.89
Pipe	344.26	364.51		$246.39	118.12
Track	83.20	84.49		68.06	16.43
Other	2691.21	2529.67		10.00	2519.67
(4)Operating Equipment					
Rental	1363.45	1363.45			1363.45
Purchase	198.90	198.90		110.00	88.90
Depreciation	525.40	525.40			525.40
(5)Initial Rehabilitation & Repairs	66.84	66.84			66.84
(6)New Buildings & Improvements, etc.					
(7)Miscellaneous Repairs to Equipment	328.15	399.97			399.97
Sampling & Analysis	15.00	15.00			15.00
Payroll Taxes	85.62	85.62			85.62
Workmen's Compensation Insurance	513.23	513.23	$142.00		371.23
Accounting	625.75	625.75	50.00		575.75
Hauling Equipment	12.88	12.88			12.88
	$24133.57	$24133.57	$192.00	$434.45	$23507.12

At the conclusion of the audit, the findings were discussed with Mr. A. W. Schone, and Mr. Robert L. Bolmer, representing the Executive Officer of Region IV. There were no unused materials, supplies or other property to be disposed of for the joint account of the operator and the Government other than that covered by waiver or liquidation.

December 21, 1953.

T. H. Brading, Auditor

Form MF-104 (Rev.)
(April 1952)

UNITED STATES
DEPARTMENT OF THE INTERIOR
DEFENSE MINERALS EXPLORATION ADMINISTRATION

Budget Bureau No. 42-R1036.3.
Approval expires 6-30-53.

OPERATOR'S MONTHLY REPORT AND VOUCHER

Month of September, 1953 Docket No. DMEA 2296 Contract No. E278
Operator's Name SMITH & RUGG Minerals Tungsten
Address P.O. Box 354, Nederland, Colorado
Contract Amount, $ 24,400.00 Government Participation: 75 % Amount, $ 18,300.00

ITEMS OF COSTS	FOR OPERATOR'S USE: Monthly Total	Totals Previously Reported	Totals To Date	FOR GOVERNMENT USE ONLY: Approved Monthly Total	Approved Totals Previously Reported	Approved Totals To Date
(1) Independent Short Form Contracts:						
Drilling						
Bulldozing						
Crosscutting						
Drifting						
(2) Labor and Supervision:						
Labor	875.00	9,268.70	10,143.70			
Supervision	224.00	4,592.00	4,816.00			
Technical Services						
(3) Operating Mat'ls. and Supplies:						
Timber		56.33	56.33			
Explosives	83.01	2,180.64	2,263.65			
Pipe		344.26	344.26			
Track		83.20	83.20			
Miscellaneous	109.60	2,800.81*	2,691.21			
(Credit results from deduction of remaining inventory)						
(4) Operating Equipment:						
Rental	88.45	1,275.00	1,363.45			
Purchase		198.90	198.90			
Depreciation	35.40	490.00	525.40			
(5) Initial Rehabilitation and Repairs		66.84	66.84			
(6) New Bldgs., Improvements, etc.		**				
(7) Miscellaneous:						
Repairs to Equipment		328.15	328.15			
Sampling and Analysis		15.00	15.00			
Payroll Taxes	9.03	76.59	85.62			
Liability Insurance W/Comp	21.23	492.00	513.23			
Accounting	100.00	525.75	625.75			
Hauling Equip't.		12.88	12.88			
(8) Contingencies (specify):						
TOTALS	1326.52	22,807.05	24,133.57	1,326.52	22,807.05	24,133.57
				(1) - 192.00		- 192.00
				(2) 434.45		- 434.45
				700.07	22,807.05	23,507.12
				$ 525.07		

I certify that the above bill is correct and just and that payment therefor has not been received.
Date 10/14/53 *Payee SMITH & RUGG
Per Joseph M Smith Title Partner

*When a voucher is signed or receipted in the name of a company or corporation, the name of the person writing the company or corporate name, as well as the capacity in which he signs, must appear. For example: "John Doe Company, per John Smith, Secretary," or "Treasurer," as the case may be.

NOTE.—Title 18, U. S. Code (Crimes), section 1001, makes it a criminal offense to make a willfully false statement or representation to any department or agency of the United States as to any matter within its jurisdiction.

(Instructions on reverse)

Pursuant to authority vested in me, I certify that this account is correct and proper for payment in the amount of:

Signature
(Authorized Certifying Officer)
Date 1/20/54 Vou. No. 54-73
(See other side)

* $5.00 drum deposit disallowed was deleted on prior report
** $24.79 repair item disallowed was deleted on this report.

(over)

(For Government use only)

CERTIFICATION BY GOVERNMENT REPRESENTATIVE:

I certify that to the best of my knowledge and belief the contractor submitting this voucher is operating a Defense Minerals Exploration Administration project under Contract No. E-278 in accordance with the terms of the contract.

Signature R. P. Bolmer, $994.89 wrts Title Mining Engineer Date OCT 16 1953

APPROVAL BY DMEA EXECUTIVE OFFICER OR ALTERNATE:

Signature W. H. King Title Executive Officer Date JAN 13 1954

MONTHLY REPORT OF OPERATOR

The Operator (Contractor) of an exploration project is required to make a monthly report to the Government through the Regional Executive Officer. This report consists of three parts as follows:

(a) *Form MF-104—Operator's Monthly Report and Voucher.*—This form details expenditures and constitutes a voucher for reimbursing the Operator for the Government's share of costs;

(b) *Form MF-104A—Operator's Unit Cost and Progress Report.*—This is a statistical report of expenditures which shows costs for the various types of operation; and

(c) *Narrative.*—A concise narrative description of progress made, results accomplished, and any unusual difficulties encountered must be furnished as an attachment to this Report and Voucher. Wherever possible, the narrative is to be illustrated with maps or sketches showing formations penetrated and location and assays of samples taken as well as advances in workings. In the case of diamond drilling or churn drilling, the location and inclination of holes is to be shown on a map; logs and assays also are to be submitted.

The Monthly Report of Operator should be prepared in an original and four copies all of which must be sent to the Executive Officer of the Region not later than the 15th of the month following.

Preparation of Form MF-104—Operator's Monthly Report and Voucher.—All the applicable spaces in Form MF-104 should be filled in by the Operator, and the Operator or his agent should sign the certification in the lower left corner of the form.

The items of costs are arranged in the order they appear in Article 6 (a) of Form MF-200 (Revised February 1952), however, this form is readily adaptable for use in reporting activities under other contract forms.

Under Item (1) delete words "Short Form" if the contract is a sub-contract under Form MF-200; and delete word "Independent" if the contract reported is on Form MF-200 (A). Also, report work paid for on a unit basis under contract Form MF-200 as though it were performed under an independent contract.

Under Item (2) include labor, supervision and technical services incurred for the exploratory operations. Do not include labor, supervision and technical services used for work performed under items (5) and (6).

Under Item (3) include the costs of material and supplies used in the project other than that used under items (5) and (6).

Under Item (4) appear the three types of operating equipment expenditures, that is, rental, purchase and depreciation. The expenditures made for renting equipment belonging to a third party will be reported under "Rental". The amount paid or duly obligated for payment for the purchase of equipment will be reported under "Purchase". The amount of expenditures due the Operator to reimburse him for depreciation of equipment owned will be reported under "Depreciation".

Item (5) comprises costs of labor, supervision, technical services, materials, etc., which are used in the initial rehabilitation and repair of existing buildings, installations, fixtures, and equipment. These costs, therefore, should not be reported under items (2) and (3).

Item (6) includes the labor, supervision, technical services, materials, etc., used in the installation or construction of new buildings, fixed improvements, etc., necessary for the project. These costs, therefore, should not be reported under items (2) and (3).

Item (7) covers miscellaneous types of expenditure such as payroll taxes, liability insurance, workmen's compensation insurance, repairs to equipment and sampling and analysis. Only that part of payroll taxes, liability insurance and workmen's compensation which are paid by the operator should be reported under item (7). The share paid by the employee as a payroll deduction is to be included under item (2) as labor costs.

Item (8) includes any unforeseen costs not included in the other seven categories.

The original of Form MF-104 when submitted for reimbursable expenses incurred under contract Form MF-200 must be supported by original documentation or by certified copies of purchase orders, payrolls or transcripts of payrolls, unless such documentation has been waived by the Regional Executive Officer. This certification may be stated thus, "Certified True Copy (or Transcript)", followed by appropriate signature. If the Executive Officer of the Region determines that a contract under Form MF-200 should have an "on-site" audit, that is, a Government auditor should make an audit of the Operator's books and records of account, the Operator need not support his monthly voucher with original or certified documents except in cases of equipment purchases whose individual costs exceed $50.00. In these cases the original or a certified copy of the purchase order or invoice should be attached to the Monthly Voucher. N. B.—Only the *original* of Form MF-104 is required to be documented. The four copies of Form MF-104 are not to be thus supported.

Form MF-104 submitted for reimbursement under fixed price contracts on Form MF-200 (A), however, are not required to be supported by documentation of any kind. The Operator will submit his claim under item (1) of Form MF-104 by deleting as stated above the word "Independent" and by showing the number of feet or other units immediately after the appropriate descriptive word, such as, drilling, bulldozing, crosscutting, drifting, etc., and giving the "Monthly Total" amount due. "Totals Previously Reported", and "Totals to Date" columns should also be filled in.

(1) Workmen's Compensation, disallowed by DMEA audit 142.00
Accounting charge disallowed by DMEA audit 50.00
(2) Liquidation of Property 192.00
634.45

GPO 83-38476

Form MF-104A
(April 1952)

Budget Bureau No. 42-R1151
Approval expires 6-30-53.

UNITED STATES
DEPARTMENT OF THE INTERIOR

DEFENSE MINERALS EXPLORATION ADMINISTRATION

OPERATOR'S UNIT COST AND PROGRESS REPORT

Month of September 1953 Docket No. DMEA 2296 Contract No. 2278

Operator's Name SMITH & RUGO Minerals

Address P.O. Box 354, Nederland, Colorado Tungsten

OPERATION	UNIT	COSTS THIS MONTH	UNITS THIS MONTH	COSTS TO DATE	UNITS TO DATE	UNIT COSTS TO DATE	AUTHORIZED BY CONTRACT Units	AUTHORIZED BY CONTRACT Unit Costs
Drifting	feet			9,300.31	425.5	$21.85	515	
Crosscutting	"			2,693.39	112.0	24.05	125	
Raising	"	1326.52	80.0	7,891.78	373.0	21.16	50	
Shafts	"			2,785.94	35.0	79.59	60	
Winzes								
Drilling: Core								
Churn								
Auger								
Stripping								
Trenching								
Test Pits								
Roads and Trails								
Underground Rehabilitation				1,196.41				
TOTAL DISTRIBUTED COSTS		1326.52	80.0	23,867.83				TOTAL COSTS AUTHORIZED BY CONTRACT
Operating Equipment Purchased				198.90				305.00
Initial Rehabilitation and Repairs				66.84				250.00
New Buildings, Improvements, etc								
TOTAL COSTS		1326.52		24,133.57				24,400.00

The undersigned company, and the official executing this certification on its behalf, hereby certify that the information contained in this report is correct and complete to the best of their knowledge and belief.

Date 10/14/53 Operator SMITH & RUGO

Per Joseph M Smith Title Partner

NOTE.—Title 18, U. S. Code (Crimes), section 1001, makes it a criminal offense to make a willfully false statement or representation to any department or agency of the United States as to any matter within its jurisdiction.

REMARKS: $24.79 disallowed for June was deleted this month as follows:
From drifting 56.3[illegible] $13.96
From raising 43.7[illegible] 10.83
24.79
$5.00 disallowed for June was deleted last month from drifting.

(Instructions on reverse)

(For Government use only)

INSTRUCTIONS

Preparation of Form MF–104A—Operator's Unit Cost and Progress Report.—Applicable places on Form 104A should be filled in by the Operator. The purpose of this form is twofold as follows: (1) to furnish the supervising engineers and other administrators with statistical information necessary to better determine the progress of the project; and (2) to furnish more permanent information on mining costs for future use. The more important phases of operation on which permanent information is desired have been outlined in the form. There are blank lines, however, for those unusual phases which may need to be reported for a particular project. It will be necessary for the Operator to distribute his costs among the applicable phases reported with the exception of three items the costs of which are not to be distributed by the Operator. These three items are: "Operating Equipment Purchased", "Initial Rehabilitation and Repairs", and "New Buildings, Improvements, etc." The reason for not distributing these items on a monthly basis is doubtless clear to the Operator, since such distribution might well overstate the cost for any one month or period short of the entire contract period.

Form MF–104A has been designed to tie in with Form MF–104 for both monthly and cumulative costs. The "Total Costs" on Form MF–104A for each month should equal the monthly "Total Costs" as reported on Form MF–104. This is also true of the "Total Costs To Date".

In preparing Form MF–104A, it will be necessary frequently to distribute certain costs over a number of items. For instance, supervisory and engineering costs may have to be distributed over several phases, such as, drifting, crosscutting, raising, etc., provided that these items were reported active for the month. Such distributions should be made on the basis of time spent on the various phases, on man days of labor charged to such phases, or on some other equitable basis. "Operating Equipment", "Initial Rehabilitation and Repairs", and "New Buildings Improvements, etc.", will be distributed to the several phases of the project by the Washington Office of DMEA at the close of the project if determined necessary. The last two columns headed "Authorized by Contract" will be filled in by the Operator if such information is found in the contract. This information is usually a part of Exhibit "A" of the contract. A space for remarks has been provided for the use of the Operator to call attention to any unusual circumstances causing excessive or disproportionate unit costs.

GPO 83-38475

U. S. DEPARTMENT OF THE INTERIOR
BUREAU OF MINES
REGION IV

DEPARTMENT OF THE INTERIOR
Bureau of Mines Administration
RECEIVED
FEB 1 1954

Administrative Audit Difference Statement

Date: January 20, 1954
Payee's Reference: Final Report
September, 1953

Joseph M. Smith &
Charles H. Dugg
P O Box 354
Nederland, Colo
Idm-8278

Upon examination of the above Payee's Reference a difference was found which made it necessary to suspend your account accordingly:

Amount Claimed $ 1,326.52

Difference $ 626.45

Amount Approved $ 700.07

The reason for the difference was due to:

Workmen's Compensation Insurance disallowed by DMEA audit	$142.00	
Accounting charge in excess of contract	50.00	$192.00
Property Liquidation: Pipe	$246.39	
Track	63.06	
Other	10.00	
Equipment	110.00	434.45
		626.45

Any reclaim for deductions made above must be supported by the ORIGINAL of this form.

Very sincerely yours,

N. E. Stokes
Audit Section

R-IV-B & F Form No. 4
4-15-52 D

UNITED STATES
DEPARTMENT OF THE INTERIOR
DEFENSE MINERALS EXPLORATION ADMINISTRATION
WASHINGTON 25, D. C.

224 New Customhouse
Denver 2, Colorado

January 29, 1954.

Memorandum

To: Secretary to the Operating Committee

From: Executive Officer, DMEA Field Team, Region IV

Subject: DMEA Docket No. 2296 (Tungsten), Contract No. Idm-E278, Smith and Rugg (Rambler Mine), Boulder County, Colorado.

Enclosed are two copies of the Operator's Monthly Progress Report, Form MF-104 and MF-104A, Operator's Narrative Report, Inspecting Engineer's Narrative Report, and other supporting data pertaining to work under the subject contract for the month of September 1953.

Also enclosed are two copies of a memorandum to Mr. T. A. Christensen, dated January 13, 1954, relative to final payment under the terms of the subject contract.

Final payment to the Operator in the amount of $525.07 has now been made in conformance with the Report of Review by the Contract Administration and Audit Division dated December 21, 1953.

W. H. King

Enclosures

UNITED STATES
DEPARTMENT OF THE INTERIOR
DEFENSE MINERALS EXPLORATION ADMINISTRATION
WASHINGTON 25, D. C.

224 New Customhouse
Denver 2, Colorado

January 13, 1954.

Memorandum

To: T. A. Christensen

From: Executive Officer, DMEA Field Team, Region IV

Subject: DMEA Docket No. 2296 (Tungsten), Contract No. Idm-E278, Smith and Rugg (Rambler Mine), Boulder County, Colorado. Operator's Monthly Progress Report for the month of September 1953. FINAL PAYMENT

Enclosed are the original and four copies of Form MF-104 and MF-104A, Narrative Report and Engineer's Report for the above period, which constitutes the Operator's final accounting report under the terms of the contract.

Also attached to each Form MF-104 are data relevant to the liquidation of the jointly-owned property acquired under the contract.

Work has been accomplished as authorized in the contract and the Operator has complied with all requirements.

Final payment is recommended as follows, which is in conformance with the Report of Review by the Contract Administration and Audit Division, dated December 21, 1953, which was released to this office January 12, 1954.

Basis for Final Payment

Total Costs Reported by the Operator	$24,133.57
Charges Disallowed by the Government	192.00
Adjusted Costs	$23,941.57
Less Amount of Property Liquidation	434.45
Total Accepted Costs	$23,507.12
Government Participation at 75%	17,630.34
Total Prior Payments	17,105.27
Balance due the Operator	$525.07

Reconciliation with Amount Claimed on
Operator's MF-104 Report for Sept. 1953

Gross Amount Claimed	$ 1,326.51
Less Prior Disallowances not Deducted by Operator	192.00
Adjusted Balance	$ 1,134.51
Less Deduction of Amount of Property Liquidation	434.45
Balance	$700.06
Government Participation at 75%	525.05
Mill Adjustment	+ .02
Balance due the Operator	$525.07

W. H. King

Enclosures

JWT:cwm

cc: Contract
Secretary to the Oper. Comm. (2)
WMTraver
Chron.
JWTownsend

224 New Customhouse
Denver 2, Colorado

November 13, 1953

Messrs. Joseph M. Smith
and Charles R. Rugg
Nederland, Colorado

Re: Docket No. DMEA 2296 (Tungsten)
Contract Idm-E278

Gentlemen:

Reference is made to your "Operator's Final Narrative Summary" dated October 26, 1953, which also included your bid and proposal, supported with copies of other bids you obtained, relative to the liquidation of property and the unexpended portion of materials and supplies acquired under the contract.

Consistent with the authority delegated to this office under Order No. 2684 from the Office of the Secretary, Department of the Interior, the United States of America, acting through the Department of the Interior, Defense Minerals Exploration Administration, does hereby accept your bid and proposal dated October 26, 1953, in the amount of $434.45, in the liquidation of property and the unexpended portion of materials and supplies acquired under Contract Idm-E278 which remained on hand at the completion of the project work.

The sum of $434.45, reflecting both yours and the Government's interest in the property, will be deducted from the gross amount of the final claim by you, held pending in this office for reimbursement under the terms of the contract, thereby automatically making a deduction from monies due you of the amount of $325.84, which is 75% of the gross amount of your bid.

Very truly yours,

W. H. King

W. H. King
Executive Officer, DMEA
Field Team, Region IV

JWT:jp
cc Contract
Chron
WMTraver
AHKoschmann
JWTownsend
MF-104 (5)

UNITED STATES
DEPARTMENT OF THE INTERIOR
BUREAU OF MINES

Region IV

Building 20, Room 137
Denver Federal Center
Denver 14, Colorado
November 12, 1953

Memorandum

To: Executive Officer, Field Team, Region IV

From: Chief, Mineral Resources Branch, Mining Division, Region IV

Subject: DMEA 2296, Contract Idm-8278 (Tungsten), Smith and Rugg (Rambler mine), Boulder County, Colorado -- Recommendations regarding the liquidation of project property.

Transmitted herewith are the original and seven copies of R. L. Bolmer's memorandum covering disposal of property on the Smith and Rugg project, Contract Idm-8278.

The recommendations have my approval.

The Operator's Final Narrative Summary Report and bids for equipment furnished with your memorandum of November 3, 1953, instructing us to submit our recommendations are enclosed.

Scott W Hagen jr
for W. M. Traver

Enclosure

WMT/kp

cc 7
8278
Chron

UNITED STATES
DEPARTMENT OF THE INTERIOR
BUREAU OF MINES

Region IV

Building 20, Room 137
Denver Federal Center
Denver 14, Colorado
November 6, 1953

Memorandum

To: Chief, Mineral Resources Branch, Mining Division, Region IV

From: R. L. Bolmer

Subject: DMEA 2296, Contract Ida-2276 (Tungsten), Smith and Rugg (Rumbler mine), Boulder County, Colorado -- Recommendations regarding the liquidation of project property

The operator's final narrative report, dated October 26, 1953, includes an inventory of all operating materials, supplies, and equipment which were purchased under the provisions of the contract and which were unexpended and salvable at the completion of project work. Explosives and fuel oil on hand at the completion of contract work were inventoried October 1, 1953, and credited, at original cost, to the project account in the operator's final monthly progress report (September 1953).

Included with the operator's final report are three bids on the salvable property inventoried therein, excepting pipe and track. The operator has submitted his own separate offer for the pipe and track purchased under the contract.

The salvable project property, its original cost, and the various bids submitted thereon, are summarized below:

	Bids Submitted		
Description (cost to project)	Smith & Rugg (operator)	Industrial Engineering & Supply Company	Tungsten Mining Company
I-R, JL-4, Jack Leg ($198.90)	$110.00	$ 75.00	$ 85.00
271 feet, 6-inch and 8-inch ventilation pipe ($170.09)	72.80	59.95	54.20
1/2 set, Proto socket wrenches($33.04)	10.00	5.00	6.00
	$192.80	$139.95	$145.20

Description (cost to project)	Bids Submitted (Cont'd) Smith & Rugg (operator)	Industrial Engineering & Supply Company	Tungsten Mining Company
738 feet, 1 inch, 2 inch, and 2-1/2 inch used B.I. pipe; miscellaneous fittings ($173.59)	$173.59		
1,900 pounds, used mine rail; 15 pounds track bolts ($68.06)	68.06		
	$241.65		
	$434.45		

The $192.80 bid by operator on the jack leg, ventilation pipe, and socket wrenches is the highest of the three submitted on these items. His offer approximates 48 percent of the original cost of the property and is considered reasonable and just. The operator's separate offer of $241.65 for the pipe and track, which now is in place in the mine and which he needs for production operations, represents 100 percent of its purchase price.

The operator has bid a total of $434.45 on all the property considered salvable under the terms of the contract. His bid represents nearly 68 percent of the original purchase price of the salvable items. The operator's offer, the highest submitted, is considered reasonable and justified and its acceptance by the Executive Officer, DMEA Field Team, Region IV, is recommended.

Should his offer be accepted, the operator has indicated that the appropriate amount may be deducted from the final contract settlement due him.

R. L. Bolmer

R. L. Bolmer
Mining Engineer

RLB/kp

cc
E278
Charon

Region IV

UNITED STATES
DEPARTMENT OF THE INTERIOR
BUREAU OF MINES

Building 20, Room 137
Denver Federal Center
Denver 14, Colorado
October 21, 1953

Memorandum

To: Executive Officer, Field Team, Region IV

From: Chief, Mineral Resources Branch, Mining Division, Region IV

Subject; DMEA 2296, Contract Idm-E278 (Tungsten), Smith and Rugg (Rambler mine), Boulder County, Colorado - Progress Report for September 1953

Enclosed are the original and four copies of the subject progress report--forms MF-104 and MF-104A, with narrative, a plan map by the operator and one by the engineer, and required documentation--and the original and six copies of R. L. Bolmer's memorandum covering inspection of the underground progress and accounts. This is the final progress report on the project.

The 80 feet advance in raises 201B, 209A, and 209B, was verified and is correctly reported in the operator's narrative and entered on the MF-104A forms. The accounts are properly documented with costs distributed between exploration and production, and are approved within the limits of our delegated authority to check them.

A discovery can be certified and with submission of the required operator's, engineer's, and geologist's reports, determination of equities in equipment and supplies with an Audit Report by representatives of the Contract Administration and Audit Division, the contract can be closed in the usual manner.

Payment is recommended and certified on the MF-104 form of $994.89, or 75 percent of the total $1,326.52 claimed by the contractor, subject to usual Region IV audit.

Payment should be deferred until details concerned with termination of the project are completed.

W. M. Traver

W. M. Traver

WMT/cb
enclosures
cc: 4
E278
DMEA Chron.

UNITED STATES
DEPARTMENT OF THE INTERIOR
BUREAU OF MINES

Region IV

Building 20, Room 137
Denver Federal Center
Denver 14, Colorado
October 19, 1953

Memorandum

To: Chief, Mineral Resources Branch, Mining Division, Region IV

From: R. L. Bolmer

Subject: DMEA 2296, Contract Idm-E278 (Tungsten), Smith and Rugg (Rambler mine), Boulder County, Colorado - Progress Report for September 1953

The progress reported this period by the operator, an aggregate advance of 80 feet in the 201B, 209A, and 209B raises, was verified during an inspection of the property October 1, 1953. The progress has been reported correctly in the operator's narrative and on form MF-104A.

During the period, Raise 201B was connected with the 92-foot level drift. The vein in 201 drift, upon which this raise was started, narrowed, became barren, and finally died out at a height of about 40 feet. The junction of two veins exposed along the 92-foot level drift was encountered about 63 feet in the raise. Both splits of the vein contained from 1/4 to 3/4 inches of high-grade ferberite. The raise followed the footwall split to the 92-foot level. The mineral exposed in the final 15 feet of the raise continues above the back of the 92-foot level drift and may prove commercial.

A short inclined raise was driven southwest from a 12-foot height in the 209A raise. This raise disproved the upward extension of ore exposed directly below in the 209 drift. A similar raise was started southwest from the 209B raise. The advance was begun on a narrow showing of ferberite exposed at a height of 20 feet in the B raise but not present below in the drift. The mineral widened to about an inch in width and appeared to be raking southwest and downward into the 209 drift. The small lense of ore that was indicated by this work probably will be extracted.

As exploration possibilities on the 187-foot level of the Rambler mine had been exhausted and as the funds authorized for exploration essentially had been expended, it was mutually agreeable between the operator and the DMEA representative that the contract be terminated. The final work, that which was reported for the September period, was completed September 26, 1953. Immediately thereafter, the operator began production operations on several narrow, but high-grade, lenses of ferberite discovered as a result of contract exploration. The ore shoot opened between the 187- and 92-foot levels by the 208A exploration raise was being stoped on the date of inspection. The included "Plan of Lower Rambler Shaft Workings" indicates the work completed under the contract. A certification of discovery will be recommended.

Unexpended supplies on hand October 1, 1953, were inventoried and credited to the project account in the September report. Fuel and explosives were the only unexpended supplies on hand which had been purchased with contract funds. Labor costs beyond September 26, 1953, were not charged to the project. Minor operating supplies, rental and depreciation of equipment, and workmens compensation during September have been prorated to contract and non-contract accounts on the basis of the days worked on exploration and production. The amount of such items not applicable to the project during the three days of non-contract work in September is small and the method of proration is acceptable. An accounting charge, incurred in October for final work on the project account, has been included with the final or September report. The charge is justified and is approved.

Substantiated costs totaling $1,326.52 are reported in the prescribed manner on the final MF-104 form. The work accomplished during the period is as authorized under the contract and the costs incurred therein are considered reasonable and justified. Payment of 75 percent of the amount reported on form MF-104, or $994.89, is recommended, subject to review by the Regional Office and verification of the applicable rates and the arithmetical accuracy of computations.

Final payment should be withheld pending the completion of all details pertinent to the termination of the subject contract. It appears that a jack-leg, purchase price $198.90, and pipe and track in the amounts of $344.26 and $83.20, are the only items which will be salvable under the terms of the contract.

R. L. Bolmer

R. L. Bolmer
Mining Engineer

RLB/cb

cc: 6, E278, DMEA Chron.

SMITH & RUGG
DMEA - 2296
CONTRACT Idm - E278
September, 1953

NARRATIVE REPORT

1. 201-B Raise - Advanced from 37.0 ft. above track to hole through to upper level. Small ore upper 15 ft. of Raise - Advance 53.0 ft.

2. 209-A Raise - Three rounds shot south-west beginning 12 ft. above track. No ore found over small ore showing in drift below. - Advance 12.0 ft.

3. 209-B Raise - Incline raise driven south-west from main raise beginning 20 ft. above track and advanced 15.0 ft. on small ore. No ore showing in back of drift directly below. Advance 15.0 ft.

Total advance this month: 80 ft.

4. Unusual difficulties - none.

5. Last three working days of month applied on production as further development not advisable and funds available under the contract have been almost exhausted. Development work ended as of September 26, 1953. Final Operators Report is included herewith. Final narrative summary and proposals for disposition of remaining assets to be submitted later.

SMITH & RUGG

Joseph M. Smith
Partner

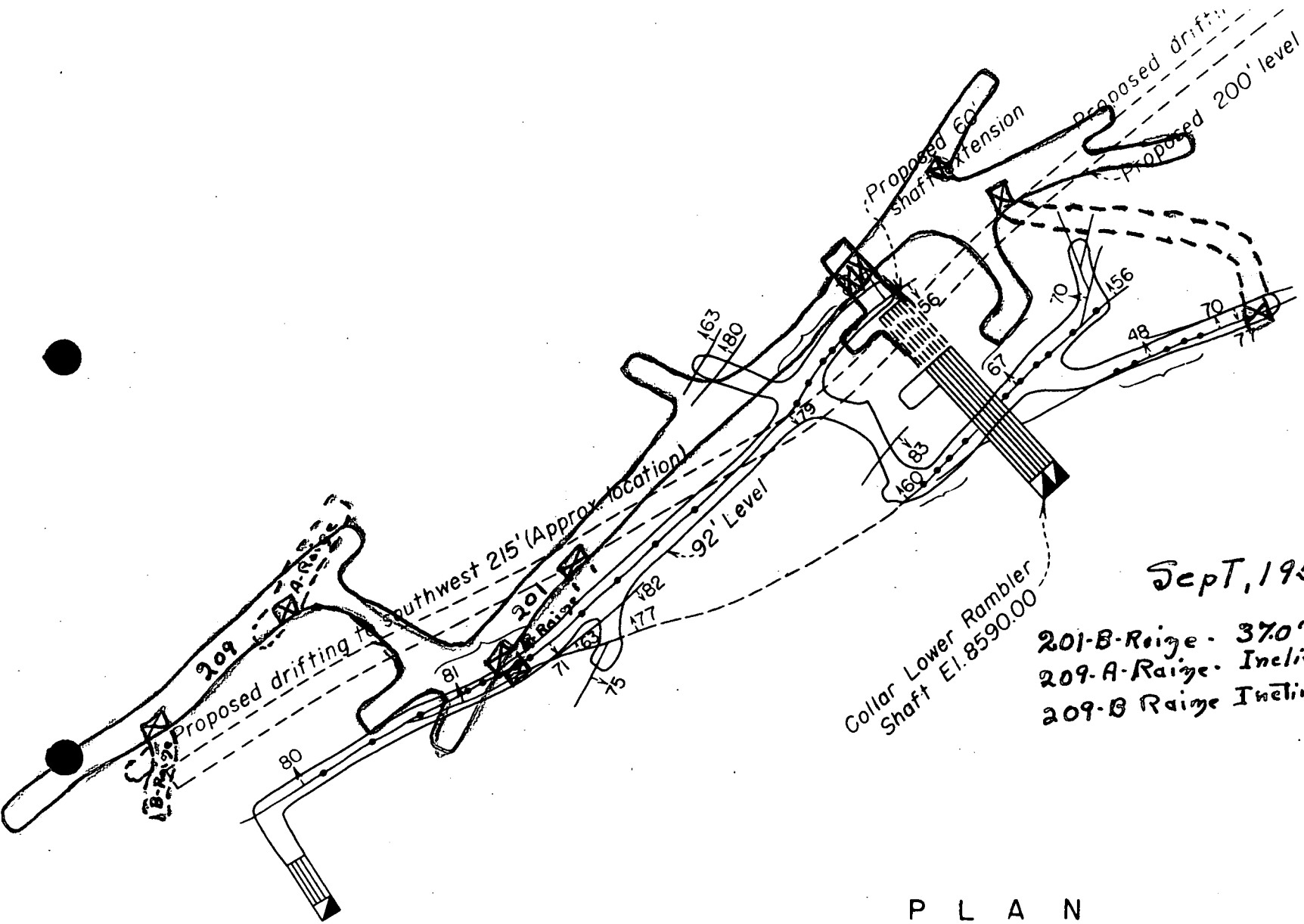

Sept, 1953

		Adv.
201-B-Raise -	370' To upper level	53.0
209-A-Raise -	Incline To So-West	12.0
209-B Raise	Incline - To So-West	15.0
	Total Adv. This Month	80.0

P L A N

(SHOWING PRESENT WORKINGS & PROPOSED EXPLORATION)

30 0 30 60 90

SCALE OF FEET

SMITH & RUGG
DMEA - 2296
CONTRACT Idm. E278

EXPENSE SUMMARY

September 1-26, 1953 inclusive

PAYEE	Ck. No.	TOTAL AMOUNT	(2) LABOR and SUPERVISION Labor	Suprv.	(3) OPERATING SUPPLIES Descrpt.	Amt.	(4) OPERATING EQUIPMENT Descrpt.	Rental	Depr.	(7) MISCELLANEOUS Item	Amt.
Payroll per Summary attached		$1,099.00	$875.00	$224.00							
Industrial Engineer. & Sup.	211	289.10			Explosives	$179.62	Generator	$ 75.00			
					Misc.	9.48	Pump	25.00			
State Comp. Ins. Fund	212	24.00								W/Comp. Ins.	$ 24.00
Payroll Taxes 9-1 to 9-26 incl. as per payroll summary		9.03								Payroll tax	9.03
Dick's Corner	210	8.70			Fuel	8.70					
Wilkins & Schone	214	40.00								Accting. (Aug.)	40.00
C & K Oil Co.	215	116.36			Fuel	116.36					
Wilkins & Schone (Sept. and final reports)	216	60.00								Accounting (Sept.& Oct.)	60.00
Depreciation on Operators Equipment per Contract		40.00					Jack Hammer		5.00		
							Dump Truck		10.00		
							Compressor		25.00		
		1,686.19	875.00	224.00		314.16		100.00	40.00		133.03
Less supplies on hand Oct. 1 1953		134.35			Explosives	75.85					
					Fuel	58.50					
Net costs for September		1,551.84	875.00	224.00		179.81		100.00	40.00		133.03
Less: 3/26ths of certain expenses to be pro-rated*		39.68				20.76		11.55	4.60	On W/Comp. only	2.77
Less: June & Oct. Gas Tax Refunds		185.64			Fuel	185.64					
TOTAL . . .		$1,326.52	$875.00	$224.00		$ 26.59		$ 88.45	$35.40		$130.26

* Contract operations ceased on September 26, 1953. Work on production of ore started Sept. 27 and continued through balance of Sept. (3 days). Total days worked in September, 26 of which 3 were not on DMEA Contract, therefore, 3/26ths of certain expenses have been excluded as indicated above. Labor and supervision for the last three days of Sept. is not included above.

SMITH & RUGG
DMEA - 2296
CONTRACT - Idm. E278

PAYROLL SUMMARY

September 1 to 26, 1953 inclusive

		1	2	3	4	5	6	7	8	9	10	11	12	13	14	15	TOTAL HOURS Reg.	TOTAL HOURS O.T.	RATES Reg.	RATES O.T.	GROSS WAGES	S.S.	W.H.T.	NET PAID
	2nd Period	16	17	18	19	20	21	22	23	24	25	26												
LABOR																								
RUGG, Charles R.	1st							8	8	8	8	8	8*		8	8	56	8	$1.75	$2.625	$ 119.00			$ 119.00
521-14-9903	2nd	8	8	8	8*		8	8	8	8	8	8*					64	16	1.75	2.625	154.00			154.00
Miner																								
PETROVIC, Eivan	1st	8	8	8	8	8*		8	8	8	8	8	8*		8	8	88	16	1.75	2.625	196.00	$2.94	$ 6.30	186.76
523-42-8048	2nd	8	8	8	8*		8	8	8	8	8	8*					64	16	1.75	2.625	154.00	2.31	4.80	146.89
Hoistman																								
SMITH, Michael	1st	8	8	8	8	8											40		1.75		70.00	1.05	8.60	60.35
523-40-7790																								
Miner																								
FLARTY, Raymond	1st														8	8	16		1.75		28.00	.42		27.58
523-03-6948	2nd	8	8	8	8*		8	8	8	8	8	8*					64	16	1.75	2.625	154.00	2.31	21.90	129.79
Miner																								
																	TOTAL LABOR				875.00	9.03	41.60	824.37
SUPERVISION																								
SMITH, Joseph M.	1st	8	8	8	8	8*		8	8	8	8	8	8*		8	8	88	16	2.00	3.00	224.00			224.00
522-07-9589																								
Supervisor																								
																	TOTAL LABOR & SUPERVISION				$1,099.00	$9.03	$41.60	$1,048.37

* Overtime

NOTE: Portion of salaries applicable to last 3 days of September excluded.

Certified to be a true summary of the payroll for this operation per the records for September 1-26, 1953 inclusive.

A.W. Schore

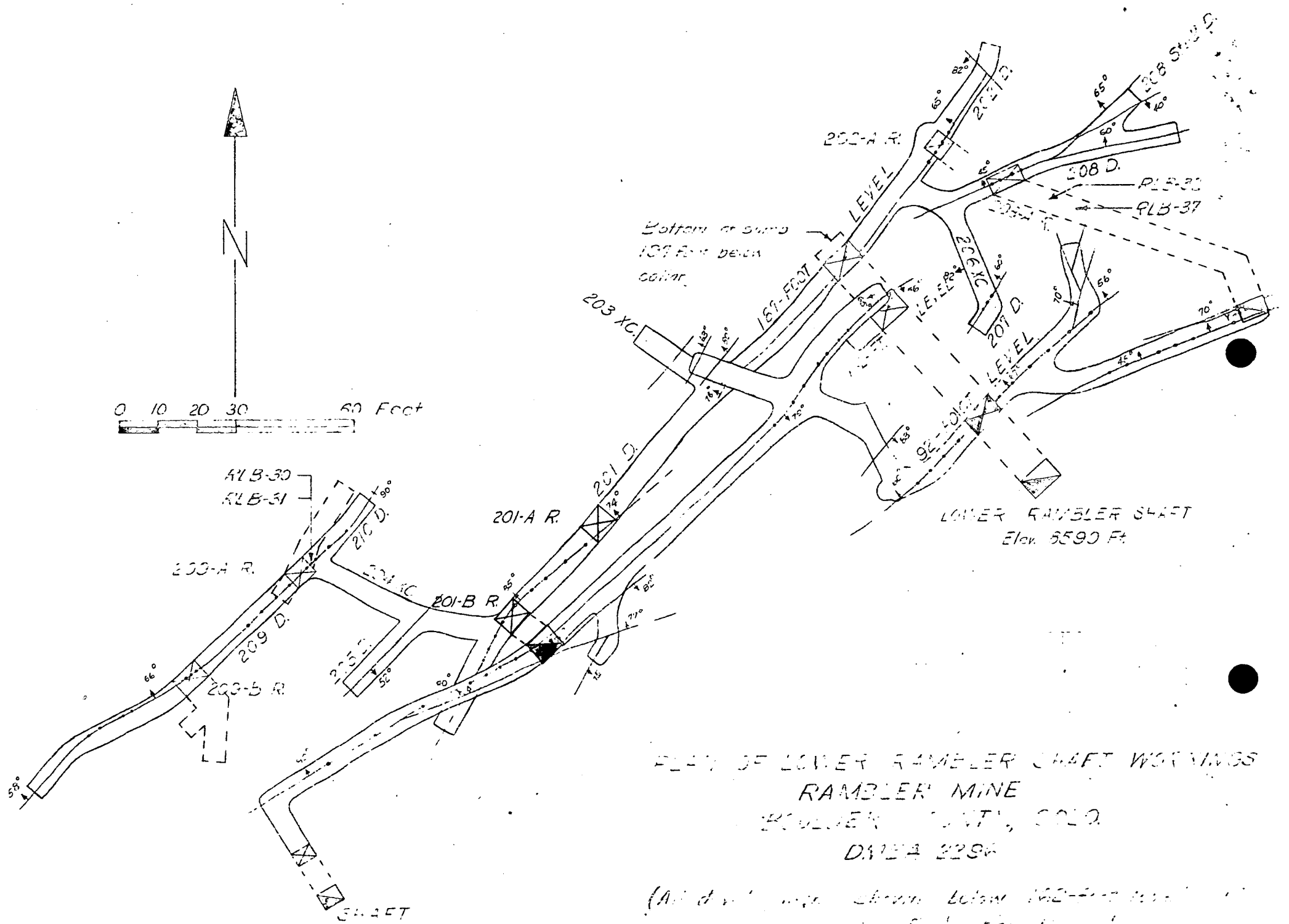

PLAN OF LOWER RAMBLER SHAFT WORKINGS
RAMBLER MINE
BOULDER COUNTY, COLO.
DATE 1929

(As of [illegible] Below 160-Foot [illegible] Exploration [illegible] 1[illegible]-E[illegible])

R.L. Bolin

Form MF-104 (Rev.)
(April 1952)

UNITED STATES
DEPARTMENT OF THE INTERIOR
DEFENSE MINERALS EXPLORATION ADMINISTRATION

Budget Bureau No. 42-R1036.3.
Approval expires 6-30-53.

Defense Minerals Administration
RECEIVED
OCT - 8 1953

OPERATOR'S MONTHLY REPORT AND VOUCHER

Month of August, 195 53 Docket No. DMEA 2296 Contract No. E-278
Operator's Name Smith & Rugg Minerals Tungsten
Address P.O.Box 354, Nederland, Colorado
Contract Amount, $ 24,400.00 Government Participation: 75 % Amount, $ 18,300.00

ITEMS OF COSTS	FOR OPERATOR'S USE			FOR GOVERNMENT USE ONLY		
	Monthly Total	Totals Previously Reported	Totals To Date	Approved Monthly Total	Approved Totals Previously Reported	Approved Totals To Date
(1) Independent Short Form Contracts:						
Drilling						
Bulldozing						
Crosscutting						
Drifting						
(2) Labor and Supervision:						
Labor	875.00	8,393.70	9,268.70			
Supervision	400.00	4,192.00	4,592.00			
Technical Services						
(3) Operating Mat'ls. and Supplies:						
Timber		56.33	56.33			
Explosives	447.10	1,733.54	2,180.64			
Pipe		344.26	344.26			
Track		83.20	83.20			
Miscellaneous	318.85	2,481.96	2,800.81	318.85	2,486.96	2,805.81
(4) Operating Equipment:						
Rental	100.00	1,175.00	1,275.00			
Purchase		198.90	198.90			
Depreciation	40.00	450.00	490.00			
(5) Initial Rehabilitation and Repairs		66.84	66.84			
(6) New Bldgs., Improvements, etc.						
(7) Miscellaneous:						
Repairs to Equipment		352.94	352.94			
Sampling and Analysis	11.00	4.00	15.00			
Payroll Taxes	7.67	63.92	76.59			
Liability Insurance w/comp	21.00	471.00	492.00			
Accounting	30.00	495.75	525.75			
Hauling Equip.		12.88	12.88			
(8) Contingencies (specify):						
TOTALS	2250.62	20,581.22	22,831.84	2,250.62	20,586.22	22,836.84
					-29.79	-29.79
				2,250.62	20,556.43	22,807.05

I certify that the above bill is correct and just and that payment therefor has not been received.

Date Sept. 12, 1953 *Payee SMITH & RUGG

Per Joseph M Smith Title Partner

*When a voucher is signed or receipted in the name of a company or corporation, the name of the person writing the company or corporate name, as well as the capacity in which he signs, must appear. For example: "John Doe Company, per John Smith, Secretary," or "Treasurer," as the case may be.

NOTE.—Title 18, U. S. Code (Crimes), section 1001, makes it a criminal offense to make a willfully false statement or representation to any department or agency of the United States as to any matter within its jurisdiction.

(Instructions on reverse)

Pursuant to authority vested in me, I certify that this account is correct and proper for payment in the amount of:

$ 1687.97

Signature
(Authorized Certifying Officer)

Date 9/29/53 Vou. No. 54-32

(See other side)

*Previous adjustment

(For Government use only)

CERTIFICATION BY GOVERNMENT REPRESENTATIVE:

I certify that to the best of my knowledge and belief the contractor submitting this voucher is operating a Defense Minerals Exploration Administration project under Contract No. E-278 in accordance with the terms of the contract.

Signature R. L. Belmer, $1,687.96 Title Mining Engineer Date SEP 17 1953

APPROVAL BY DMEA EXECUTIVE OFFICER OR ALTERNATE: R.A.B.

Signature W. H. King Title Executive Officer Date SEP 23 1953

MONTHLY REPORT OF OPERATOR

The Operator (Contractor) of an exploration project is required to make a monthly report to the Government through the Regional Executive Officer. This report consists of three parts as follows:

(a) *Form MF-104—Operator's Monthly Report and Voucher.*—This form details expenditures and constitutes a voucher for reimbursing the Operator for the Government's share of costs;

(b) *Form MF-104A—Operator's Unit Cost and Progress Report.*—This is a statistical report of expenditures which shows costs for the various types of operation; and

(c) *Narrative.*—A concise narrative description of progress made, results accomplished, and any unusual difficulties encountered must be furnished as an attachment to this Report and Voucher. Wherever possible, the narrative is to be illustrated with maps or sketches showing formations penetrated and location and assays of samples taken as well as advances in workings. In the case of diamond drilling or churn drilling, the location and inclination of holes is to be shown on a map; logs and assays also are to be submitted.

The Monthly Report of Operator should be prepared in an original and four copies all of which must be sent to the Executive Officer of the Region not later than the 15th of the month following.

Preparation of Form MF-104—Operator's Monthly Report and Voucher.—All the applicable spaces in Form MF-104 should be filled in by the Operator, and the Operator or his agent should sign the certification in the lower left corner of the form.

The items of costs are arranged in the order they appear in Article 6 (a) of Form MF-200 (Revised February 1952), however, this form is readily adaptable for use in reporting activities under other contract forms.

Under Item (1) delete words "Short Form" if the contract is a sub-contract under Form MF-200; and delete word "Independent" if the contract reported is on Form MF-200 (A). Also, report work paid for on a unit basis under contract Form MF-200 as though it were performed under an independent contract.

Under Item (2) include labor, supervision and technical services incurred for the exploratory operations. Do not include labor, supervision and technical services used for work performed under items (5) and (6).

Under Item (3) include the costs of material and supplies used in the project other than that used under items (5) and (6).

Under Item (4) appear the three types of operating equipment expenditures, that is, rental, purchase and depreciation. The expenditures made for renting equipment belonging to a third party will be reported under "Rental". The amount paid or duly obligated for payment for the purchase of equipment will be reported under "Purchase". The amount of expenditures due the Operator to reimburse him for depreciation of equipment owned will be reported under "Depreciation".

Item (5) comprises costs of labor, supervision, technical services, materials, etc., which are used in the initial rehabilitation and repair of existing buildings, installations, fixtures, and equipment. These costs, therefore, should not be reported under items (2) and (3).

Item (6) includes the labor, supervision, technical services, materials, etc., used in the installation or construction of new buildings, fixed improvements, etc., necessary for the project. These costs, therefore, should not be reported under items (2) and (3).

Item (7) covers miscellaneous types of expenditure such as payroll taxes, liability insurance, workmen's compensation insurance, repairs to equipment and sampling and analysis. Only that part of payroll taxes, liability insurance and workmen's compensation which are paid by the operator should be reported under item (7). The share paid by the employee as a payroll deduction is to be included under item (2) as labor costs.

Item (8) includes any unforeseen costs not included in the other seven categories.

The original of Form MF-104 when submitted for reimbursable expenses incurred under contract Form MF-200 must be supported by original documentation or by certified copies of purchase orders, payrolls or transcripts of payrolls, unless such documentation has been waived by the Regional Executive Officer. This certification may be stated thus, "Certified True Copy (or Transcript)", followed by appropriate signature. If the Executive Officer of the Region determines that a contract under Form MF-200 should have an "on-site" audit, that is, a Government auditor should make an audit of the Operator's books and records of account, the Operator need not support his monthly voucher with original or certified documents except in cases of equipment purchases whose individual costs exceed $50.00. In these cases the original or a certified copy of the purchase order or invoice should be attached to the Monthly Voucher. N. B.—Only the *original* of Form MF-104 is required to be documented. The four copies of Form MF-104 are not to be thus supported.

Form MF-104 submitted for reimbursement under fixed price contracts on Form MF-200 (A), however, are not required to be supported by documentation of any kind. The Operator will submit his claim under item (1) of Form MF-104 by deleting as stated above the word "Independent" and by showing the number of feet or other units immediately after the appropriate descriptive word, such as, drilling, bulldozing, crosscutting, drifting, etc., and giving the "Monthly Total" amount due. "Totals Previously Reported", and "Totals to Date" columns should also be filled in.

GPO 83-38476

Form MF-104A
(April 1952)

Budget Bureau No. 42-R1151
Approval expires 6-30-53.

UNITED STATES
DEPARTMENT OF THE INTERIOR

DEFENSE MINERALS EXPLORATION ADMINISTRATION

Defense Minerals Administration
RECEIVED
OCT 8 1953

OPERATOR'S UNIT COST AND PROGRESS REPORT

Month of August 1953 Docket No. DMEA 2296 Contract No. E 278
Operator's Name Smith & Rugg Minerals Tungsten
Address P.O.Box 354, Nederland, Colorado

OPERATION	UNIT	COSTS THIS MONTH	UNITS THIS MONTH	COSTS TO DATE	UNITS TO DATE	UNIT COSTS TO DATE	AUTHORIZED BY CONTRACT Units	AUTHORIZED BY CONTRACT Unit Costs
Drifting	feet			9,314.27	425.5	21.89	515	
Crosscutting	feet	74.24	2.0	2,693.39	112.0	24.05	125	
Raising	feet	2176.38	94.0	6,576.09	293.0	22.44	50	
Shafts	feet			2,785.94	35.0	79.59	60	
Winzes								
Drilling: Core								
Churn								
Auger								
Stripping								
Trenching								
Test Pits								
Roads and Trails								
Underground Rehabilitation				1,196.41				
TOTAL DISTRIBUTED COSTS		2250.62	96.0	22,566.10				TOTAL COSTS AUTHORIZED BY CONTRACT
Operating Equipment Purchased				199.90				305.00
Initial Rehabilitation and Repairs				66.84				250.00
New Buildings, Improvements, etc.								
TOTAL COSTS		2250.62		22,831.84				24,480.00

The undersigned company, and the official executing this certification on its behalf, hereby certify that the information contained in this report is correct and complete to the best of their knowledge and belief.

Date Sept. 12, 1953 Operator SMITH & RUGG
Per Joseph M Smith Title Partner

NOTE.—Title 18, U. S. Code (Crimes), section 1001, makes it a criminal offense to make a willfully false statement or representation to any department or agency of the United States as to any matter within its jurisdiction.

REMARKS: Operating costs allocated on basis of labor costs for each operation during August as follows:

	Labor	Percent
Crosscutting	42.00	3.3
Raising	1233.00	96.7
	1275.00	100.0

(Instructions on reverse)

(For Government use only)

INSTRUCTIONS

Preparation of Form MF–104A—Operator's Unit Cost and Progress Report.—Applicable places on Form 104A should be filled in by the Operator. The purpose of this form is twofold as follows: (1) to furnish the supervising engineers and other administrators with statistical information necessary to better determine the progress of the project; and (2) to furnish more permanent information on mining costs for future use. The more important phases of operation on which permanent information is desired have been outlined in the form. There are blank lines, however, for those unusual phases which may need to be reported for a particular project. It will be necessary for the Operator to distribute his costs among the applicable phases reported with the exception of three items the costs of which are not to be distributed by the Operator. These three items are: "Operating Equipment Purchased", "Initial Rehabilitation and Repairs", and "New Buildings, Improvements, etc." The reason for not distributing these items on a monthly basis is doubtless clear to the Operator, since such distribution might well overstate the cost for any one month or period short of the entire contract period.

Form MF–104A has been designed to tie in with Form MF–104 for both monthly and cumulative costs. The "Total Costs" on Form MF–104A for each month should equal the monthly "Total Costs" as reported on Form MF–104. This is also true of the "Total Costs To Date".

In preparing Form MF–104A, it will be necessary frequently to distribute certain costs over a number of items. For instance, supervisory and engineering costs may have to be distributed over several phases, such as, drifting, crosscutting, raising, etc., provided that these items were reported active for the month. Such distributions should be made on the basis of time spent on the various phases, on man days of labor charged to such phases, or on some other equitable basis. "Operating Equipment", "Initial Rehabilitation and Repairs", and "New Buildings Improvements, etc.", will be distributed to the several phases of the project by the Washington Office of DMEA at the close of the project if determined necessary. The last two columns headed "Authorized by Contract" will be filled in by the Operator if such information is found in the contract. This information is usually a part of Exhibit "A" of the contract. A space for remarks has been provided for the use of the Operator to call attention to any unusual circumstances causing excessive or disproportionate unit costs.

GPO 83-38475

UNITED STATES
DEPARTMENT OF THE INTERIOR
DEFENSE MINERALS EXPLORATION ADMINISTRATION
WASHINGTON 25, D. C.

DEPARTMENT OF THE INTERIOR
Defense Minerals Administration
RECEIVED
OCT 8 1953

224 New Customhouse
Denver 2, Colorado

September 23, 1953.

Memorandum

To: T. A. Christensen

From: Executive Officer, DMEA Field Team, Region IV

Subject: DMEA Docket 2296, Contract Idm-E278 (Tungsten), Smith and Rugg, Rambler Mine, Boulder County, Colorado. Operator's Monthly Progress Report for the period August 1953.

Enclosed are the original and four copies of Form MF-104 and Form MF-104A, Narrative Report, and Engineer's Report for the above period.

Work has been accomplished as authorized in the contract and payment is recommended for 75 percent of the amount as reported on Form MF-104, contingent on your verification of the correctness of applicable rates and arithmetical accuracy of computations, except for the following deductions - None.

Remarks:

Date of Report	September 12, 1953.
Date Received in Field Office	September 14, 1953.
Date Received in Region Office	September 23, 1953.

W. H. King
W. H. King

Enclosures

RDB:cwm

cc: Contract
Secretary to the Oper. Comm. (2)
WMTraver
Chron.

UNITED STATES
DEPARTMENT OF THE INTERIOR
BUREAU OF MINES

Region IV

Building 20, Room 137
Denver Federal Center
Denver 14, Colorado
September 22, 1953

Memorandum

To: Executive Officer, Field Team, Region IV

From: Chief, Mineral Resources Branch, Mining Division, Region IV

Subject: LMA 2296, Contract Idm-5278 (Tungsten), Smith and Rugg (Hambler mine), Boulder County, Colorado - Progress report for August 1953

Enclosed are the original and four copies of the subject progress report--forms MP-104 and MP-104A, with narrative, plan map, and required documentation--and the original and six copies of F. L. Bolner's memorandum covering inspection of the underground progress and accounts.

The advance of 94 feet in raises 208-A, 209-B, 201-A, and 201-B, and of 2 feet in 203 crosscut, as reported in the narrative and entered on the MP-104A form, are confirmed and the accounts are properly documented and approved within the limits of our delegated authority. Operations are adequately described in the inspecting engineer's memorandum.

Payment is recommended and certified on the MP-104 form of $1,687.96, or 75 percent of the total $2,250.62 claimed by the contractor, subject to usual Region IV audit.

W. A. Traver

W. A. Traver

Enclosures

cc: 4
5278
LMA Chron.

RMT/ e

UNITED STATES
DEPARTMENT OF THE INTERIOR
BUREAU OF MINES

Region IV

Building 20, Room 137
Denver Federal Center
Denver 14, Colorado
September 17, 1953

Memorandum

To: Chief, Mineral Resources Branch, Mining Division, Region IV

From: R. L. Bolmer

Subject: MMA 2296, Contract Idm-1278 (Tungsten), Smith and Rugg (Rambler mine), Boulder County, Colorado - Progress report for August 1953

The progress reported by the operator this period, 94 feet of raising and 2 feet of crosscutting, was confirmed during an inspection of the property September 1, 1953. The progress has been reported correctly in the operator's narrative and on form DF-104A.

The inclined section of the 209-A raise, which had been following the lower edge of the ore shoot, passed beyond the eastern limits of the ore at a distance of some 95 feet above the 187-foot level. From that point the raise was driven vertically on the vein in order to connect into the east end of a 92-foot level drift. The vein in the last 30 feet of this raise was barren, the edge of the ore occurring a few feet to the west. A few more rounds will be taken in the 209-B raise and raising stopped if the mineral does not improve. The 209-A raise was stopped last period. Raise 201-A was stopped at 12 feet when the vein and narrow streak of ferberite pinched out. Raise 201-B will be continued for as long as conditions encountered warrant. The warranted work that can be performed within the contract amount may be completed next period or during October at the latest. A certification of a small discovery probably will be recommended.

Incurred costs totaling $2,250.62 are reported for the period. The costs have been substantiated in the prescribed manner and are considered justified and not excessive. Work has been performed as authorized in the contract and payment of 75 percent of the total amount reported on form DF-104, or $1,687.96, is recommended subject to review by the regional office and verification of the applicable rates and the arithmetical accuracy of the computations.

R. L. Bolmer
R. L. Bolmer
Mining Engineer

cc: 0
1278
DMA Chron.

SMITH and RUGG
DMEA - 2296
CONTRACT Idm - E278
August - 1953

NARRATIVE REPORT

1. 208-A Raise - Advanced from 94.0 Feet above track to 125.0 feet above track. Connnecting with end of drift on upper level. Advance - 31.0 feet.

2. 209-B Raise - Advanced from 33.0 feet above track to 54.0 feet above track. Small streak of ferberite all the way but not worth saving. Advance - 21.0 feet.

3. 203 - Crosscut - Advanced from 21.0 feet from center of 201 drift to 23.0 feet from center of 201 drift. Advance-2.0 feet.

4. 201-A Raise - Raise started on small ore in 201 drift 38 feet N.E. of 204 crosscut and advanced to 19.0 feet above track. Ore pinched out and work stopped. Advance - 12.0 Feet.

5. 201-B Raise - Raise started on small ore in 201 drift 6.0 feet N.E. of center of 204 crosscut and advanced to 37.0 feet above track. Small ore continued. Advance - 30.0 feet.

6. Total advance all places - 96.0 feet. (Raise 94 ft. Crosscut 2 ft.)

7. Operating Crew - Total of three (3) men all month.

8. No difficulties encountered.

SMITH and RUGG

By Joseph M Smith
Joseph M. Smith, Partner

SMITH & RUGG
DMEA-2296
Contract-Idm-E278

EXPENSE SUMMARY - August, 1953

PAYEE	CK. NO.	TOTAL AMOUNT	(2) LABOR & SUPERVISION Labor	Supry.	(3) OPERATING SUPPLIES Descrpt.	Amt.	(4) OPERATING EQUIPMENT Descrpt.	Rental	Depr.	(7) MISCELLANEOUS Item	Amt.
Payroll per summary attached		$1275.00	$875.00	$400.00		$		$	$		
Payroll taxes-Aug.-Accrued		7.67								Payroll taxes	$7.67
Industrial Eng. & Supply Co.	197	632.58			Explos.	437.41	Generator	75.00			
					Misc.	95.17	Pump	25.00			
C&K Oil Company	198	223.68			Fuel	223.68					
Wilkins & Schone	199	30.00								Accounting	30.00
State Comp. Ins. Fund	200	21.00								W/Comp.Ins.	21.00
Hill & Judel	201	11.00								Assaying	11.00
Standard Machine Works	202	9.69			Explos.	9.69					
Depreciation on Operators Equipment per Contract		40.00					Jack hammer		5.00		
							Dump Truck		10.00		
							Compressor		25.00		
TOTALS		$2250.62	$875.00	$400.00		$765.95		$100.00	$40.00		$69.67

SMITH & RUGG
DMEA - 2296
Contract - Idm - E278

PAYROLL SUMMARY - August, 1953

		1st Period	1	2	3	4	5	6	7	8	9	10	11	12	13	14	15		TOTAL HOURS		RATES		GROSS	S.S.	W.H.T.	NET
		2nd Period	16	17	18	19	20	21	22	23	24	25	26	27	28	29	30	31	Reg.	O.T.	Reg.	O.T.	WAGES			PAID
RUGG, Charles L.		1st	8		8	8	8	8	8	8*		8	8	8	8	8	8*		80	16	$1.75	$2.625	$ 182.00	$	$	$ 182.00
[redacted]1-14-9903		2nd		8	8	8	8	8	8*		8	8	8	8	8	8*			80	16	1.75	2.625	182.00			182.00
Miner																										
PETROVIC, Eivan		1st	8*		8	8	8	8	8	8*		8	8	8	8	8	8*		80	24	1.75	2.625	203.00	3.04	7.70	192.26
523-42-8048		2nd		8	8	8	8	8	8*		8	8	8	8	8	8*		8	88	16	1.75	2.625	196.00	2.94	6.30	186.76
Hoistman																										
SMITH, Michael																										
523-40-7790		2nd				8	8	8			8	8	8	8				8	64		1.75		112.00	1.68	17.00	93.32
Miner																										
																			TOTAL LABOR				875.00	7.66	31.00	836.34
SM[redacted]H, Joseph M.		1st	8*		8	8	8	8	8	8*		8	8	8	8	8	8*		80	24	2.00	3.00	232.00			232.00
[redacted]2-07-9589		2nd		8	8	8	8	8	8*					8	8	8		8	72	8	2.00	3.00	168.00			168.00
Supervisor																										
																			SUPERVISION				400.00			400.00
																			TOTAL LABOR & SUPERVISION . . .				$1,275.00	$7.66	$31.00	$1236.34

*-Overtime

Certified to be a true summary of
subject payroll for August, 1953

A.W. Shore

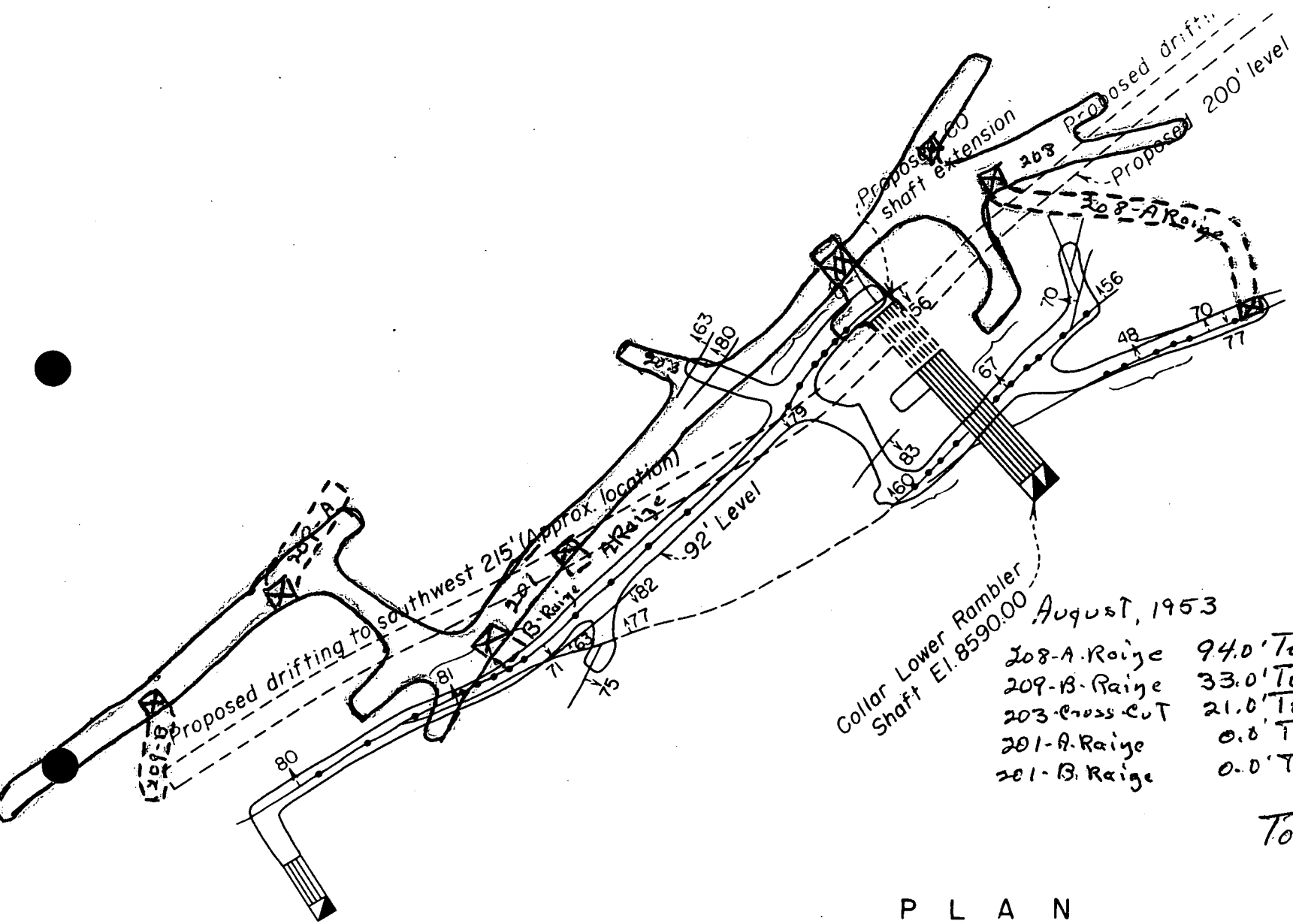

August, 1953

208-A Raise	94.0' To	125.0'	31.0'
209-B Raise	33.0' To	54.0'	21.0'
203 Cross Cut	21.0' To	23.0'	2.0'
201-A Raise	0.0' To	19.0'	12.0'
201-B Raise	0.0' To	37.0'	30.0'
Total			96.0'

P L A N

(SHOWING PRESENT WORKINGS & PROPOSED EXPLORATION)

30 0 30 60 90

SCALE OF FEET

Form MF-104 (Rev.)
(April 1952)

Budget Bureau No. 42-R1036.3.
Approval expires 6-30-53.

UNITED STATES
DEPARTMENT OF THE INTERIOR
DEFENSE MINERALS EXPLORATION ADMINISTRATION

OPERATOR'S MONTHLY REPORT AND VOUCHER

Month of July, 1953 Docket No. DMEA 2296 Contract No. E-278
Operator's Name SMITH and RUGG Minerals
Address P.O. Box 354 - Nederland, Colorado Tungsten
Contract Amount, $ 24,400.00 Government Participation: 75 % Amount, $ 18,300.00

ITEMS OF COSTS	FOR OPERATOR'S USE			FOR GOVERNMENT USE ONLY		
	Monthly Total	Totals Previously Reported	Totals To Date	Approved Monthly Total	Approved Totals Previously Reported	Approved Totals To Date
(1) Independent Short Form Contracts:						
Drilling						
Bulldozing						
Crosscutting						
Drifting						
(2) Labor and Supervision:						
Labor	1113.00	7280.70	8393.70			
Supervision	384.00	3808.00	4192.00			
Technical Services						
(3) Operating Mat'ls. and Supplies:						
Timber		56.33	56.33			
Explosives	24.89	1708.65	1733.54			
Pipe	170.09	174.17	344.26			
Track	11.83	71.37	83.20			
Miscellaneous	123.24	2363.72	2486.96			
(4) Operating Equipment:						
Rental	100.00	1075.00	1175.00			
Purchase		198.90	198.90			
Depreciation	40.00	410.00	450.00			
(5) Initial Rehabilitation and Repairs		66.84	66.84			
(6) New Bldgs., Improvements, etc.						
(7) Miscellaneous:						
Repairs to Equipment	56.28	296.66	352.94			
Sampling and Analysis		4.00	4.00			
Payroll Taxes	11.54	57.38	68.92			
Liability Insurance W/Comp	26.00	445.00	471.00			
Accounting	48.00	447.75	495.75			
Hauling Equipment		12.88	12.88			
(8) Contingencies (specify):						
				2108.87	18,477.35	20,586.~~33~~ 22
					*-142.29	*-142.29
TOTALS	2108.87	18477.35	20586.22	**+112.50		**+112.50
				2221.37	18,335.06	20,556.43

I certify that the above bill is correct and just and that payment therefor has not been received.

Date Aug 11, 53 *Payee SMITH and RUGG

Per Joseph M Smith Title Partner

*When a voucher is signed or receipted in the name of a company or corporation, the name of the person writing the company or corporate name, as well as the capacity in which he signs, must appear. For example: "John Doe Company, per John Smith, Secretary," or "Treasurer," as the case may be.

NOTE.—Title 18, U. S. Code (Crimes), section 1001, makes it a criminal offense to make a willfully false statement or representation to any department or agency of the United States as to any matter within its jurisdiction.

(Instructions on reverse)

Pursuant to authority vested in me, I certify that this account is correct and proper for payment in the amount of:

$ 1666.03

Signature
(Authorized Certifying Officer)

Date 8/28/53 Vou. No. 54-23

(See other side)

* Previous Disallowance ** Previous disallowance but now considered allowable by DMEA Engineers.

(For Government use only)

CERTIFICATION BY GOVERNMENT REPRESENTATIVE:

I certify that to the best of my knowledge and belief the contractor submitting this voucher is operating a Defense Minerals Exploration Administration project under Contract No. E-278 in accordance with the terms of the contract.

Signature R. P. Bohney $1,581.65 Title Mining Engineer Date Aug. 24, 1953

APPROVAL BY DMEA EXECUTIVE OFFICER OR ALTERNATE: R.D.B.

Signature W. H. King Title Executive Officer Date AUG 27 1953

MONTHLY REPORT OF OPERATOR

The Operator (Contractor) of an exploration project is required to make a monthly report to the Government through the Regional Executive Officer. This report consists of three parts as follows:

(a) *Form MF-104—Operator's Monthly Report and Voucher.*—This form details expenditures and constitutes a voucher for reimbursing the Operator for the Government's share of costs;

(b) *Form MF-104A—Operator's Unit Cost and Progress Report.*—This is a statistical report of expenditures which shows costs for the various types of operation; and

(c) *Narrative.*—A concise narrative description of progress made, results accomplished, and any unusual difficulties encountered must be furnished as an attachment to this Report and Voucher. Wherever possible, the narrative is to be illustrated with maps or sketches showing formations penetrated and location and assays of samples taken as well as advances in workings. In the case of diamond drilling or churn drilling, the location and inclination of holes is to be shown on a map; logs and assays also are to be submitted.

The Monthly Report of Operator should be prepared in an original and four copies all of which must be sent to the Executive Officer of the Region not later than the 15th of the month following.

Preparation of Form MF-104—Operator's Monthly Report and Voucher.—All the applicable spaces in Form MF-104 should be filled in by the Operator, and the Operator or his agent should sign the certification in the lower left corner of the form.

The items of costs are arranged in the order they appear in Article 6 (a) of Form MF-200 (Revised February 1952), however, this form is readily adaptable for use in reporting activities under other contract forms.

Under Item (1) delete words "Short Form" if the contract is a sub-contract under Form MF-200; and delete word "Independent" if the contract reported is on Form MF-200 (A). Also, report work paid for on a unit basis under contract Form MF-200 as though it were performed under an independent contract.

Under Item (2) include labor, supervision and technical services incurred for the exploratory operations. Do not include labor, supervision and technical services used for work performed under items (5) and (6).

Under Item (3) include the costs of material and supplies used in the project other than that used under items (5) and (6).

Under Item (4) appear the three types of operating equipment expenditures, that is, rental, purchase and depreciation. The expenditures made for renting equipment belonging to a third party will be reported under "Rental". The amount paid or duly obligated for payment for the purchase of equipment will be reported under "Purchase". The amount of expenditures due the Operator to reimburse him for depreciation of equipment owned will be reported under "Depreciation".

Item (5) comprises costs of labor, supervision, technical services, materials, etc., which are used in the initial rehabilitation and repair of existing buildings, installations, fixtures, and equipment. These costs, therefore, should not be reported under items (2) and (3).

Item (6) includes the labor, supervision, technical services, materials, etc., used in the installation or construction of new buildings, fixed improvements, etc., necessary for the project. These costs, therefore, should not be reported under items (2) and (3).

Item (7) covers miscellaneous types of expenditure such as payroll taxes, liability insurance, workmen's compensation insurance, repairs to equipment and sampling and analysis. Only that part of payroll taxes, liability insurance and workmen's compensation which are paid by the operator should be reported under item (7). The share paid by the employee as a payroll deduction is to be included under item (2) as labor costs.

Item (8) includes any unforeseen costs not included in the other seven categories.

The original of Form MF-104 when submitted for reimbursable expenses incurred under contract Form MF-200 must be supported by original documentation or by certified copies of purchase orders, payrolls or transcripts of payrolls, unless such documentation has been waived by the Regional Executive Officer. This certification may be stated thus, "Certified True Copy (or Transcript)", followed by appropriate signature. If the Executive Officer of the Region determines that a contract under Form MF-200 should have an "on-site" audit, that is, a Government auditor should make an audit of the Operator's books and records of account, the Operator need not support his monthly voucher with original or certified documents except in cases of equipment purchases whose individual costs exceed $50.00. In these cases the original or a certified copy of the purchase order or invoice should be attached to the Monthly Voucher. N. B.—Only the *original* of Form MF-104 is required to be documented. The four copies of Form MF-104 are not to be thus supported.

Form MF-104 submitted for reimbursement under fixed price contracts on Form MF-200 (A), however, are not required to be supported by documentation of any kind. The Operator will submit his claim under item (1) of Form MF-104 by deleting as stated above the word "Independent", and by showing the number of feet or other units immediately after the appropriate descriptive word, such as, drilling, bulldozing, crosscutting, drifting, etc., and giving the "Monthly Total" amount due. "Totals Previously Reported", and "Totals to Date" columns should also be filled in.

GPO 83-38476

Form MF-104A
(April 1952)

Budget Bureau No. 42-R1151
Approval expires 6-30-53.

UNITED STATES
DEPARTMENT OF THE INTERIOR

DEFENSE MINERALS EXPLORATION ADMINISTRATION

OPERATOR'S UNIT COST AND PROGRESS REPORT

Month of July 1953 Docket No. DMEA 2296 Contract No. E-278
Operator's Name SMITH and RUGG Minerals Tungsten
Address P.O. Box 354 - Nederland, Colorado

OPERATION	UNIT	COSTS THIS MONTH	UNITS THIS MONTH	COSTS TO DATE	UNITS TO DATE	UNIT COSTS TO DATE	AUTHORIZED BY CONTRACT Units	AUTHORIZED BY CONTRACT Unit Costs
Drifting	Feet			9319.27	425.5	21.90	515	
Crosscutting	Feet			2619.15	110.0	23.81	125	
Raising	Feet	2108.87	105.0	4399.71	199.0	22.11	50	
Shafts	Feet			2785.94	35.0	79.59	60	
Winzes								
Drilling: Core								
Churn								
Auger								
Stripping								
Trenching								
Test Pits								
Roads and Trails								
ground Rehabilitation				1196.41				
TOTAL DISTRIBUTED COSTS		2108.87	105.0	20320.48				TOTAL COSTS AUTHORIZED BY CONTRACT
Operating Equipment Purchased				198.90				305.00
Initial Rehabilitation and Repairs				66.84				250.00
New Buildings, Improvements, etc.								
TOTAL COSTS		2108.87		20586.22				24,400.00

The undersigned company, and the official executing this certification on its behalf, hereby certify that the information contained in this report is correct and complete to the best of their knowledge and belief.

Date Aug. 11, 53 Operator SMITH & RUGG

Per Joseph M. Smith Title Partner

REMARKS:

→ NOTE.—Title 18, U. S. Code (Crimes), section 1001, makes it a criminal offense to make a willfully false statement or representation to any department or agency of the United States as to any matter within its jurisdiction.

(Instructions on reverse)

(For Government use only)

INSTRUCTIONS

Preparation of Form MF–104A—Operator's Unit Cost and Progress Report.—Applicable places on Form 104A should be filled in by the Operator. The purpose of this form is twofold as follows: (1) to furnish the supervising engineers and other administrators with statistical information necessary to better determine the progress of the project; and (2) to furnish more permanent information on mining costs for future use. The more important phases of operation on which permanent information is desired have been outlined in the form. There are blank lines, however, for those unusual phases which may need to be reported for a particular project. It will be necessary for the Operator to distribute his costs among the applicable phases reported with the exception of three items the costs of which are not to be distributed by the Operator. These three items are: "Operating Equipment Purchased", "Initial Rehabilitation and Repairs", and "New Buildings, Improvements, etc." The reason for not distributing these items on a monthly basis is doubtless clear to the Operator, since such distribution might well overstate the cost for any one month or period short of the entire contract period.

Form MF–104A has been designed to tie in with Form MF–104 for both monthly and cumulative costs. The "Total Costs" on Form MF–104A for each month should equal the monthly "Total Costs" as reported on Form MF–104. This is also true of the "Total Costs To Date".

In preparing Form MF–104A, it will be necessary frequently to distribute certain costs over a number of items. For instance, supervisory and engineering costs may have to be distributed over several phases, such as, drifting, crosscutting, raising, etc., provided that these items were reported active for the month. Such distributions should be made on the basis of time spent on the various phases, on man days of labor charged to such phases, or on some other equitable basis. "Operating Equipment", "Initial Rehabilitation and Repairs", and "New Buildings Improvements, etc.", will be distributed to the several phases of the project by the Washington Office of DMEA at the close of the project if determined necessary. The last two columns headed "Authorized by Contract" will be filled in by the Operator if such information is found in the contract. This information is usually a part of Exhibit "A" of the contract. A space for remarks has been provided for the use of the Operator to call attention to any unusual circumstances causing excessive or disproportionate unit costs.

GPO 83-38475

U. S. DEPARTMENT OF THE INTERIOR
BUREAU OF MINES
REGION IV

DEPARTMENT OF THE INTERIOR
Bureau of Mines
SEP 8-1953

Administrative Audit Difference Statement

Date: August 23, 1953
Payee's
Reference: Progress Report - July, 1953

Joseph E. Smith & Charles R. Rugg
Nederland, Colorado
Idm-2278

Upon examination of the above Payee's Reference a difference was found which made it necessary to suspend your account accordingly:

Amount Claimed $2,108.87

Difference $ 112.50

Amount Approved $2,221.37

The reason for the difference was due to:

Repairs to operator-owned compressor which were disallowed in June are now considered allowable and are reinstated herein. $112.50

Any reclaim for deductions made above must be supported by the ORIGINAL of this form.

Very sincerely yours,

N. E. Stokes
Audit Section

R-IV-B & F Form No. 4
4-15-52 D

UNITED STATES
DEPARTMENT OF THE INTERIOR
DEFENSE MINERALS EXPLORATION ADMINISTRATION
WASHINGTON 25, D. C.

224 New Customhouse
Denver 2, Colorado

August 27, 1953.

Memorandum

To: T. A. Christensen

From: Executive Officer, DMEA Field Team, Region IV

Subject: DMEA Docket 2296, Contract Idm-E278 (Tungsten), Smith and Rugg (Rambler Mine), Boulder County, Colorado. Operator's Monthly Progress Report for the period July 1953.

Enclosed are the original and four copies of Form MF-104 and Form MF-104A, Narrative Report, and Engineer's Report for the above period.

Work has been accomplished as authorized in the contract and payment is recommended for 75 percent of the amount as reported on Form MF-104, contingent on your verification of the correctness of applicable rates and arithmetical accuracy of computations.

A disallowance of $112.50 was made from Repair to Equipment on the June 1953 report. This charge is now considered to be allowable as per Circular Letters 19 and 31 and this amount is to be reinstated on Form MF-104 for July 1953.

Remarks:

Date of Report	August 11, 1953.
Date Received in Field Office	August 12, 1953.
Date Received in Region Office	August 26, 1953.
Date Checked in Region Office	August 26, 1953.

W. H. King
W. H. King

Enclosures

RDB:cwm

cc: Contract
Secretary to the Oper. Comm. (2)
WMTraver
Chron.

UNITED STATES
DEPARTMENT OF THE INTERIOR
BUREAU OF MINES

Region IV

Building 20, Room 13
Denver Federal Center
Denver 14, Colorado
August 25, 1953

Memorandum

To: Executive Officer, Field Team, Region IV

From: Chief, Mineral Resources Branch, Mining Division, Region IV

Subject: DMEA 2296, Contract Idm-E2 8 (Tungsten), Smith and Rugg (Rambler mine), Boulder County, Colorado - Progress report for July 1953

Enclosed are the original and four copies of the subject progress report--forms MF-104 and MF-104A, with narrative, plan map, and required documentation--and the original and six copies of R. L. Bolmer's memorandum covering inspection of the underground progress and accounts.

The advance of 105 feet, all in raises 208-A, 209-A, and 209-B, as reported in the narrative and on the MF-104A form, was confirmed by inspection and the accounts are approved.

Your attention is called to Bolmer's reference to a ventilating pipe purchase for $117.30, which we are approving subject to an amendment, if you consider it necessary. We are again passing an item of $56.28 for repair parts for the compressor, depreciation equipment.

Within the limits of delegated authority to check, the documentation and accounting are accepted. Payment is approved and certified on the MF-104 form of $1,581.65, or 75 percent of the total $2,108.87 claimed by the contractor, subject to usual Region IV audit.

W. M. Traver

W. M. Traver

enclosures

WMT/cb

cc: 4
E278
DMEA Chron.

UNITED STATES
DEPARTMENT OF THE INTERIOR
BUREAU OF MINES

Region IV

Building 20, Room 13
Denver Federal Center
Denver 14, Colorado
August 25, 1953

Memorandum

To: Chief, Mineral Resources Branch, Mining Division, Region IV

From: R. L. Bolser

Subject: DMSA 2296, Contract Idm-22[illegible] (Tungsten), Smith and [illegible] (Rambler Mine), Boulder County, Colorado - Progress report for July 1953

Progress under the subject contract was inspected August 21, 1953, with the operators. The advance reported in the operators' narrative and on form MT-104A, a total of 105 feet in raises 209-A, 209-[illegible], and 209-[illegible], was confirmed during the inspection. As reported, raise 209-A was stopped due to the unfavorable conditions encountered. Raises 209-A and 209-B are being continued. Two raises begun in August from the 201 drift will also be continued for as long as the vein remains promising.

Two-hundred tons of ore, recovered to date from the exploration drifts and raises, have been milled by the operators; 3,500 pounds of concentrates, assaying 60.0 percent WO_3 and 0.0[illegible]5 percent [illegible], were recovered. Assuming a [illegible]0 percent recovery, the ore broken during raising and drifting has averaged 0.[illegible]5 percent WO_3. The operators estimate their milling and trucking costs as between $4.00 and $5.00 per ton. Sixty percent concentrates can be marketed for approximately $3.00 per pound of contained WO_3. Under such conditions, the ore, as mined, will have a gross value of about $31.50 per ton. A somewhat higher grade of ore probably can be maintained once stoping operations are begun. The operators believe, that by milling and marketing the ore themselves, they can profitably mine the ore even though it is subject to a total royalty of 20 percent.

Incurred costs totaling $2,108.[illegible] are reported this period. Individually, the reported costs are substantiated in the prescribed manner. All items of cost reported, including repairs to the operators' compressor, are considered necessary and justified costs of the project.

Provisions for the purchase of ventilation pipe are not included in the contract. The purchase of such a basic operating material is considered necessary and justified for this project and the incurred costs so reported this period, therefore, are being accepted. An amendment to the contract would be recommended if such is deemed necessary.

Work has been accomplished as authorized by the contract and the total costs reported are approved, subject to review by the regional office and verification of the arithmetic accuracy of the computations.

R. L. Bolmer

R. L. Bolmer
Mining Engineer

RLB/cb

cc: E
E2/8
DMEA Chron.

SMITH & RUGG
DMEA - 2296
CONTRACT Idm-E278

EXPENSE SUMMARY - July, 1953

PAYEE	CK. NO.	TOTAL AMOUNT	LABOR and SUPERVISION (2) Labor	(2) Suprv.	OPERATING SUPPLIES (3) Descrpt.	(3) Amt.	OPERATING EQUIPMENT (4) Descrpt.	(4) Rental	(4) Depr.	MISCELLANEOUS (7) Item	(7) Amt.
Payroll per Summary attached		$1,497.00	$1,113.00	$384.00							
Payroll taxes - July - Accrued		11.54								Payroll) Taxes)	$ 11.54
Barter Machinery Co.	178	117.30			Vent Pipe	$117.30					
Wilkins & Scnone	183	48.00								Accounting	48.00
C & K Oil Company	185	69.13			Fuel Oil	69.13					
[illegible]entine Hardware Co.	186	56.28								Repairs	56.28
Industrial Engineering & Supply Co.	187	215.93			Track	11.83	Generator	$ 75.00			
					Explosives	24.89	Pump	25.00			
					Pipe	52.79					
					Misc.	26.42					
State Compensation Insurance Fund	188	26.00								W/Comp.Ins.	26.00
Dick's Corner Service Station	190	27.69			Fuel Oil	27.69					
Depreciation of Operator's Equipment per contract		40.00					JackHammer		$ 5.00		
							Dump Truck		10.00		
							Compressor		25.00		
TOTALS		$2,108.87	$1,113.00	$384.00		$330.05		$100.00	$40.00		$141.82

SMITH and RUGG
DMEA -2296
CONTRACT Idm - E278

PAYROLL SUMMARY - July 1953

		1	2	3	4	5	6	7	8	9	10	11	12	13	14	15		TOTAL HOURS		RATES		GROSS	S. S.	W.H.T.	NET PAID
	2nd Period	16	17	18	19	20	21	22	23	24	25	26	27	28	29	30	31	Reg.	O.T.	Reg.	O.T.				
Rugg, Charles R.	1st	8	8	8			8	8	8	8	8	8*		8	8	8		88	8	$1.75	$2.625	$175.00			$ 175.00
521-14-9903	2nd	8	8	8*		8	8	8	8	8	8*			8	8			72	16	1.75	2.625	168.00			168.00
Miner																									
Petrovic, Eivan	1st	8	8	8			8	8	8	8	8	8*		8	8	8		88	8	1.75	2.625	175.00	$ 2.63	1.50	170.87
523-42-8048	2nd	8	8	8*		8	8	8	8	8	8*		8	8	8	8	8	96	16	1.75	2.625	210.00	3.15	9.70	197.15
Pointman																									
Smith, Michael B.	1st	8	8	8			8	8	8	8	8	8*		8	8	8		88	8	1.75	2.625	175.00	2.63	29.20	143.17
523-40-7790	2nd	8	8	8*		8	8	8	8	8	8*		8	8	8	8	8	96	16	1.75	2.625	210.00	3.15	37.40	169.45
Miner																									
																		TOTAL LABOR				$1,113.00	$11.56	$77.80	$1,023.64
Smith, Joseph M.	1st	8	8	8			8	8	8	8	8	8*		8	8	8		88	8	2.00	3.00	200.00			200.00
522-07-9589	2nd	8	8	8*					8	8	8		8	8	8	8	8	80	8	2.00	3.00	184.00			184.00
Supervisor																									
																		SUPERVISION				384.00			384.00
																		TOTAL LABOR and SUPERVISION				$1,497.00	$11.56	$77.80	$1,407.64

* - Overtime

Certified to be a true summary of
subject payroll for July, 1953

D. Allison

State Compensation Insurance Fund

NOTICE OF CHANGE IN RATES AND CHANGE OF RATE ENDORSEMENT

JOSEPH M. SMITH & 22946
CHARLES R. RUGG dba 1
SMITH & RUGG
BOX 354
NEDERLAND, COLO.

CHANGE OF RATE OF ENDORSEMENT***

In consideration of the increased benefits provided by the recent amendments to the Workmen's Compensation and Occupational Disease Laws of Colorado, and pursuant to the provisions of the policy to which this Endorsement is attached, and by reason of the approval of the Industrial Commission of Colorado thereto, the present rate or rates applicable to the insurance provided by said policy and any endorsements forming a part thereof, are increased a flat 7.3% for the period beginning May 1, 1953 and ending with the termination date of the current annual policy period.

The premium computed under the foregoing rate change shall be adjusted and paid in accordance with the provisions of the said policy.

Nothing herein shall be held to vary, waive, alter or extend any of the provisions or conditions of said policy except as above stated.

Attached to and forming a part of the above identified policy issued by the State Compensation Insurance Fund of Denver, Colorado.

IN WITNESS WHEREOF The Industrial Commission of Colorado has caused this endorsement to be signed by its chairman, and manager of the State Compensation Insurance Fund, this 15th day of April, 1953.

STATE COMPENSATION INSURANCE FUND

Manager

INDUSTRIAL COMMISSION OF COLORADO

Chairman

***At the recent session of the Colorado General Assembly certain bills were enacted amending the Workmen's Compensation and Occupational Disease Laws. These amendments went into effect on March 6, 1953. They provide for an increase in the weekly benefit rate and make other changes adding considerably to the cost of both compensation and occupational disease cases. It has been found that it will require an increase of 7.3% in the current premium rates to meet adequately the increase in loss payments resulting from the aforesaid amendments. The Industrial Commission, by resolution, approved the said 7.3% rate increase and has made it effective as of May 1, 1953, for the unexpired portion of the current annual period. The additional premium resulting therefrom will be calculated when the next annual payroll audit of your policy is made. Therefore, if your policy is on a monthly or quarterly adjustment basis, do not attempt to figure this rate change in your payroll reportings, but continue them at the present rates. The foregoing will serve to constitute the needed Change of Rate Endorsement, and should, as it states, be attached to your policy. This rate increase should not be confused with the regular yearly rate revisions based on ordinary loss experience. The latter take effect on the anniversary renewal date of your policy.

SMITH and RUGG
DMEA - 2296
CONTRACT Idm -E278
July - 1953

NARRATIVE REPORT

1. 208-A Raise - Advanced from 42.0 ft. above track to 94.0 ft. above track. Advance 52.0 ft. All material removed from this raise has been saved, containing 0.50% to 1.50% WO_3.

2. 209-A Raise - Advanced from 11.0 ft. above track to 54.0 ft. above track on small vein showing some ferberite. No ore worth saving and will discontinue work on this raise. Advance 43.0 ft.

3. 209-B Raise - Advanced from 23.0 ft. above track to 33.0 ft. above track. All material removed from this raise has been saved. Containing approximately 0.60% WO_3. Will continue. Advance 10.0 ft.

4. Total Advance all places 105.0 ft.

5. Timber and chutes put in all raises to approximately 16.0 ft. above track.

6. Operating Crew - One man on surface and three underground most of the month.

7. Unusual Difficulties - No unusual difficulties encountered.

SMITH and RUGG

By Joseph M. Smith
JOSEPH M. SMITH, Partner

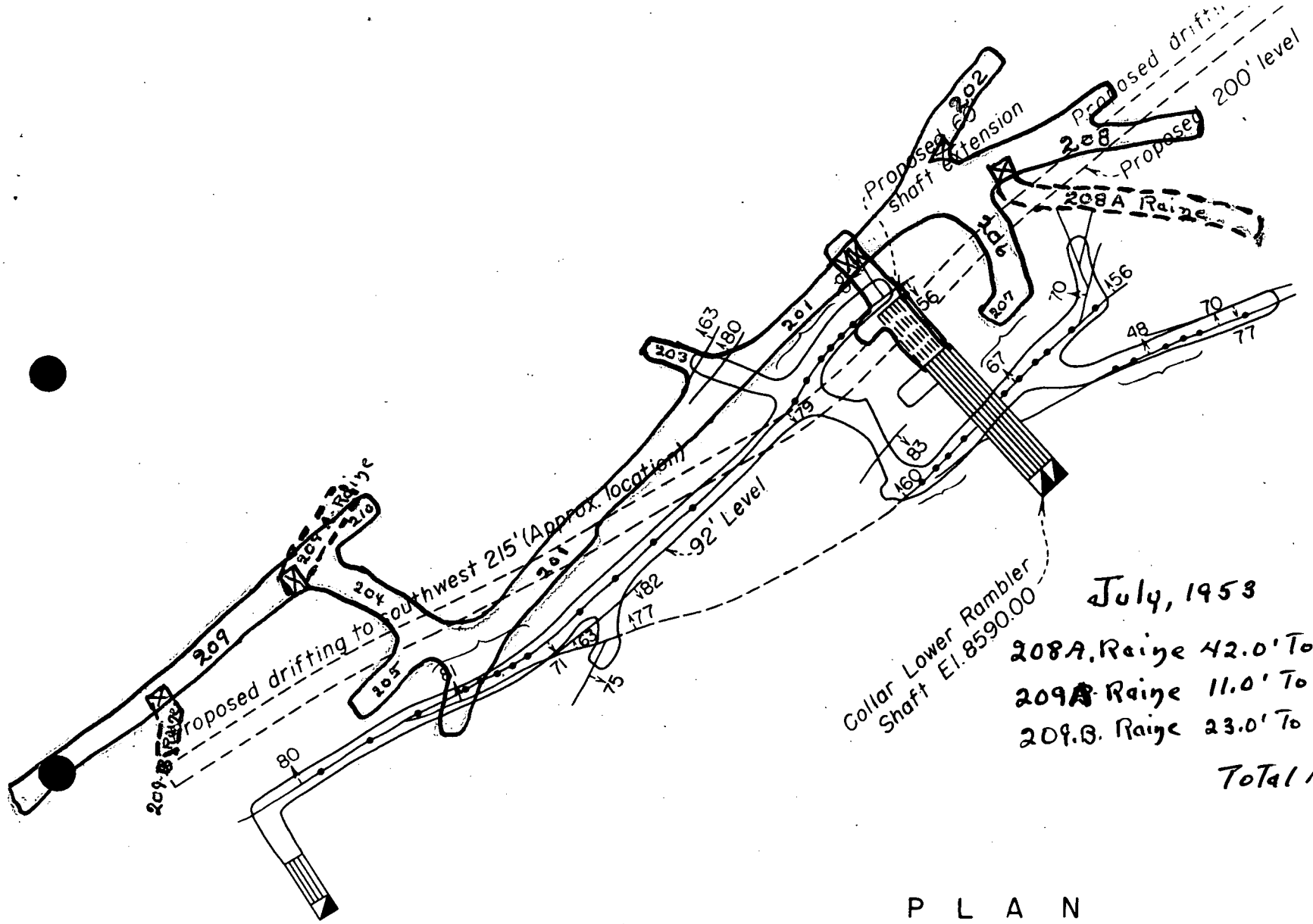

July, 1953

			Advance
208A. Raine	42.0' To	94.0'	52.0'
209A Raine	11.0' To	54.0'	43.0'
209.B. Raine	23.0' To	33.0'	10.0'

Total Advance 105.0'

P L A N

(SHOWING PRESENT WORKINGS & PROPOSED EXPLORATION)

30 0 30 60 90

SCALE OF FEET

Form MF-104 (Rev.)
(April 1952)

UNITED STATES
DEPARTMENT OF THE INTERIOR
DEFENSE MINERALS EXPLORATION ADMINISTRATION

Budget Bureau No. 42-R1036.3.
Approval expires 6-30-53.

RECEIVED
AUG 10 1953

OPERATOR'S MONTHLY REPORT AND VOUCHER

Month of June, 1953 Docket No. DMEA 2296 Contract No. E 278
Operator's Name SMITH & RUGG Minerals Tungsten
Address P.O.Box 354 - Nederland, Colorado
Contract Amount, $ 24,400.00 Government Participation: 75 % Amount, $ 18,300.00

ITEMS OF COSTS	FOR OPERATOR'S USE			FOR GOVERNMENT USE ONLY		
	Monthly Total	Totals Previously Reported	Totals To Date	Approved Monthly Total	Approved Totals Previously Reported	Approved Totals To Date
(1) Independent Short Form Contracts:						
Drilling						
Bulldozing						
Crosscutting						
Drifting						
(2) Labor and Supervision:						
Labor	896.00	6384.70	7280.70			
Supervision	200.00	3608.00	3808.00			
Technical Services						
(3) Operating Mat'ls. and Supplies:						
Timber		56.33	56.33			
Explosives	102.66	1605.99	1708.65			
Pipe		174.17	174.17			
Track		71.37	71.37			
Miscellaneous	181.79	2181.93	2363.72	152.00	2,181.93	2,333.93
(4) Operating Equipment:						
Rental	100.00	975.00	1075.00			
Purchase		198.90	198.90			
Depreciation	40.00	370.00	410.00			
(5) Initial Rehabilitation and Repairs		66.84	66.84			
(6) New Bldgs., Improvements, etc.						
(7) Miscellaneous:						
Repairs to Equipment	112.50	184.16	296.66	00	184.16	184.16
Sampling and Analysis		4.00	4.00			
Payroll Taxes	9.65	47.73	57.38			
Liability Insurance W/Comp	14.00	431.00	445.00			
Accounting	34.75	413.00	447.75			
Hauling Equipment		12.88	12.88			
(8) Contingencies (specify):						
TOTALS	$1691.35	$16,786.00	$18,477.35	1,549.06	16,786.00	18,335.06

I certify that the above bill is correct and just and that payment therefor has not been received.
Date July 13, 1953 *Payee SMITH & RUGG
Per Joseph M Smith Title Operator

*When a voucher is signed or receipted in the name of a company or corporation, the name of the person writing the company/or corporate name, as well as the capacity in which he signs, must appear. For example: "John Doe Company, per John Smith, Secretary," or "Treasurer," as the case may be.

NOTE.—Title 18, U. S. Code (Crimes), section 1001, makes it a criminal offense to make a willfully false statement or representation to any department or agency of the United States as to any matter within its jurisdiction.

(Instructions on reverse)

Pursuant to authority vested in me, I certify that this account is correct and proper for payment in the amount of:

$ 1161.80

Signature
(Authorized Certifying Officer)

Date 8/10/53 Voucher DMA 54-14
(See other side)

(For Government use only)

CERTIFICATION BY GOVERNMENT REPRESENTATIVE:

I certify that to the best of my knowledge and belief the contractor submitting this voucher is operating a Defense Minerals Exploration Administration project under Contract No. E-278 in accordance with the terms of the contract.

Signature R. R. Palmer 1246.17 mm Title Mining Engineer Date July 23, 1953

APPROVAL BY DMEA EXECUTIVE OFFICER OR ALTERNATE: R.H.B.

Signature W. H. King Title Executive Officer Date JUL 31 1953

MONTHLY REPORT OF OPERATOR

The Operator (Contractor) of an exploration project is required to make a monthly report to the Government through the Regional Executive Officer. This report consists of three parts as follows:

(*a*) *Form MF–104—Operator's Monthly Report and Voucher.*—This form details expenditures and constitutes a voucher for reimbursing the Operator for the Government's share of costs;

(*b*) *Form MF–104A—Operator's Unit Cost and Progress Report.*—This is a statistical report of expenditures which shows costs for the various types of operation; and

(*c*) *Narrative.*—A concise narrative description of progress made, results accomplished, and any unusual difficulties encountered must be furnished as an attachment to this Report and Voucher. Wherever possible, the narrative is to be illustrated with maps or sketches showing formations penetrated and location and assays of samples taken as well as advances in workings. In the case of diamond drilling or churn drilling, the location and inclination of holes is to be shown on a map; logs and assays also are to be submitted.

The Monthly Report of Operator should be prepared in an original and four copies all of which must be sent to the Executive Officer of the Region not later than the 15th of the month following.

Preparation of Form MF–104—Operator's Monthly Report and Voucher.—All the applicable spaces in Form MF–104 should be filled in by the Operator, and the Operator or his agent should sign the certification in the lower left corner of the form.

The items of costs are arranged in the order they appear in Article 6 (a) of Form MF–200 (Revised February 1952), however, this form is readily adaptable for use in reporting activities under other contract forms.

Under Item (1) delete words "Short Form" if the contract is a sub-contract under Form MF–200; and delete word "Independent" if the contract reported is on Form MF–200 (A). Also, report work paid for on a unit basis under contract Form MF–200 as though it were performed under an independent contract.

Under Item (2) include labor, supervision and technical services incurred for the exploratory operations. Do not include labor, supervision and technical services used for work performed under items (5) and (6).

Under Item (3) include the costs of material and supplies used in the project other than that used under items (5) and (6).

Under Item (4) appear the three types of operating equipment expenditures, that is, rental, purchase and depreciation. The expenditures made for renting equipment belonging to a third party will be reported under "Rental". The amount paid or duly obligated for payment for the purchase of equipment will be reported under "Purchase". The amount of expenditures due the Operator to reimburse him for depreciation of equipment owned will be reported under "Depreciation".

Item (5) comprises costs of labor, supervision, technical services, materials, etc., which are used in the initial rehabilitation and repair of existing buildings, installations, fixtures, and equipment. These costs, therefore, should not be reported under items (2) and (3).

Item (6) includes the labor, supervision, technical services, materials, etc., used in the installation or construction of new buildings, fixed improvements, etc., necessary for the project. These costs, therefore, should not be reported under items (2) and (3).

Item (7) covers miscellaneous types of expenditure such as payroll taxes, liability insurance, workmen's compensation insurance, repairs to equipment and sampling and analysis. Only that part of payroll taxes, liability insurance and workmen's compensation which are paid by the operator should be reported under item (7). The share paid by the employee as a payroll deduction is to be included under item (2) as labor costs.

Item (8) includes any unforeseen costs not included in the other seven categories.

The original of Form MF–104 when submitted for reimbursable expenses incurred under contract Form MF–200 must be supported by original documentation or by certified copies of purchase orders, payrolls or transcripts of payrolls, unless such documentation has been waived by the Regional Executive Officer. This certification may be stated thus, "Certified True Copy (or Transcript)", followed by appropriate signature. If the Executive Officer of the Region determines that a contract under Form MF–200 should have an "on-site" audit, that is, a Government auditor should make an audit of the Operator's books and records of account, the Operator need not support his monthly voucher with original or certified documents except in cases of equipment purchases whose individual costs exceed $50.00. In these cases the original or a certified copy of the purchase order or invoice should be attached to the Monthly Voucher. N. B.—Only the *original* of Form MF–104 is required to be documented. The four copies of Form MF–104 are not to be thus supported.

Form MF–104 submitted for reimbursement under fixed price contracts on Form MF–200 (A), however, are not required to be supported by documentation of any kind. The Operator will submit his claim under item (1) of Form MF–104 by deleting as stated above the word "Independent" and by showing the number of feet or other units immediately after the appropriate descriptive word, such as, drilling, bulldozing, crosscutting, drifting, etc., and giving the "Monthly Total" amount due. "Totals Previously Reported", and "Totals to Date" columns should also be filled in.

GPO 83-38476

Form MF-102A
(April 1952)

Budget Bureau No. 42-R1151
Approval expires 6-30-53.

UNITED STATES
DEPARTMENT OF THE INTERIOR

DEFENSE MINERALS EXPLORATION ADMINISTRATION

OPERATOR'S UNIT COST AND PROGRESS REPORT

Month of June 1953 Docket No. DMEA 2296 Contract No. E-278
Operator's Name SMITH & RUGG Minerals Tungsten
Address P.O. Box 354 - Nederland, Colorado

OPERATION	UNIT	COSTS THIS MONTH	UNITS THIS MONTH	COSTS TO DATE	UNITS TO DATE	UNIT COSTS TO DATE	AUTHORIZED BY CONTRACT Units	AUTHORIZED BY CONTRACT Unit Costs
Drifting	Feet	$ 952.23	24.5	$9319.27	425.5	21.90	515	
Crosscutting	Feet			2619.15	110.0	23.81	125	
Raising	Feet	739.12	40.5	2290.84	94.0	24.37	50	
Shafts	Feet			2785.94	35.0	79.59	60	
Winzes								
Drilling: Core								
Churn								
Auger								
Stripping								
Trenching								
Test Pits								
Roads and Trails								
Underground rehabilitation				1196.41				
TOTAL DISTRIBUTED COSTS		$1691.35	65.0	$18,211.61	664.5		750	TOTAL COSTS AUTHORIZED BY CONTRACT
Operating Equipment Purchased				198.90				305.00
Initial Rehabilitation and Repairs				66.84				250.00
New Buildings, Improvements, etc.								
TOTAL COSTS		$1691.35		$18,477.35				$24,400.00

The undersigned company, and the official executing this certification on its behalf, hereby certify that the information contained in this report is correct and complete to the best of their knowledge and belief.

Date July 13, 1953 Operator SMITH & RUGG
Per Joseph M. Smith Title Operator

REMARKS: Operating costs allocated on basis of labor costs for each operation during June, as follows:

	Labor	Percent
Drifting	$617.00	56.3
Raising	479.00	43.7
	$1096.00	100.0%

NOTE.—Title 18, U. S. Code (Crimes), section 1001, makes it a criminal offense to make a willfully false statement or representation to any department or agency of the United States as to any matter within its jurisdiction.

(Instructions on reverse)

(For Government use only)

INSTRUCTIONS

Preparation of Form MF–104A—Operator's Unit Cost and Progress Report.—Applicable places on Form 104A should be filled in by the Operator. The purpose of this form is twofold as follows: (1) to furnish the supervising engineers and other administrators with statistical information necessary to better determine the progress of the project; and (2) to furnish more permanent information on mining costs for future use. The more important phases of operation on which permanent information is desired have been outlined in the form. There are blank lines, however, for those unusual phases which may need to be reported for a particular project. It will be necessary for the Operator to distribute his costs among the applicable phases reported with the exception of three items the costs of which are not to be distributed by the Operator. These three items are: "Operating Equipment Purchased", "Initial Rehabilitation and Repairs", and "New Buildings, Improvements, etc." The reason for not distributing these items on a monthly basis is doubtless clear to the Operator, since such distribution might well overstate the cost for any one month or period short of the entire contract period.

Form MF–104A has been designed to tie in with Form MF–104 for both monthly and cumulative costs. The "Total Costs" on Form MF–104A for each month should equal the monthly "Total Costs" as reported on Form MF–104. This is also true of the "Total Costs To Date".

In preparing Form MF–104A, it will be necessary frequently to distribute certain costs over a number of items. For instance, supervisory and engineering costs may have to be distributed over several phases, such as, drifting, crosscutting, raising, etc., provided that these items were reported active for the month. Such distributions should be made on the basis of time spent on the various phases, on man days of labor charged to such phases, or on some other equitable basis. "Operating Equipment", "Initial Rehabilitation and Repairs", and "New Buildings Improvements, etc.", will be distributed to the several phases of the project by the Washington Office of DMEA at the close of the project if determined necessary. The last two columns headed "Authorized by Contract" will be filled in by the Operator if such information is found in the contract. This information is usually a part of Exhibit "A" of the contract. A space for remarks has been provided for the use of the Operator to call attention to any unusual circumstances causing excessive or disproportionate unit costs.

GPO 83-38475

U. S. DEPARTMENT OF THE INTERIOR
BUREAU OF MINES
REGION IV

Defense Info... Administration
Received
AUG 10 1953

Administrative Audit Difference Statement

Date: August 10, 1953
Payee's
Reference: Progress
Report - June, 1953

Joseph M. Smith & Charles M. Dugg
Nederland, Colorado
I-DPA-E-270

Upon examination of the above Payee's Reference a difference was found which made it necessary to suspend your account accordingly:

Amount Claimed $1,691.35

Difference $ 142.29

Amount Approved $1,549.06

The reason for the difference was due to:

Repairs to operator owned compressor not allowed	$112.50
Stearns-Rogers repairs to Stoper not listed in contract	24.79
G & E Oil Drum (deposit - not allowed)	5.00
	$142.29

Any reclaim for deductions made above must be supported by the ORIGINAL of this form.

Very sincerely yours,

N. E. Stokes
Audit Section

R-IV-B & F Form No. 4
4-15-52 D

UNITED STATES
DEPARTMENT OF THE INTERIOR
DEFENSE MINERALS EXPLORATION ADMINISTRATION
WASHINGTON 25, D. C.

224 New Customhouse
Denver 2, Colorado

July 31, 1953.

Memorandum

To: T. A. Christensen

From: Executive Officer, DMEA Field Team, Region IV

Subject: DMEA Docket 2296, Contract Idm-E278 (Tungsten), Smith and Rugg (Rambler Mine), Boulder County, Colorado. Operator's Monthly Progress Report for the period June 1953.

Enclosed are the original and four copies of Form MF-104 and Form MF-104A, Narrative Report, and Engineer's Report for the above period.

Work has been accomplished as authorized in the contract and payment is recommended for 75 percent of the amount as reported on Form MF-104, contingent on your verification of the correctness of applicable rates and arithmetical accuracy of computations, except for the following deductions.

Operating Materials and Supplies - Miscellaneous	
Stearns-Rogers (Parts for Cp-34 stoper)	$24.79
Stoper not listed in contract, therefore repairs for same are not allowable.	
C&K Oil (drum deposit)	5.00
Not an allowable cost	
Repairs to Equipment	112.50
Connecting rod for Operator's Compressor is considered as a major repair item and is not allowable.	
Total Disallowances -	$142.29

Remarks:

Date of Report	July 13, 1953
Date Received in Field Office	July 15, 1953
Date Received in Region Office	July 27, 1953
Date Processed for Payment	July 30, 1953.

W H King
W. H. King

Enclosures

RDB:cwm
cc: Contract; Secretary to the Oper. Comm. (2); WMTraver; Chron.

UNITED STATES
DEPARTMENT OF THE INTERIOR
BUREAU OF MINES

Region IV

Building 20, Room 137
Denver Federal Center
Denver 14, Colorado
July 24, 1953

Memorandum

To: Executive Officer, Field Team, Region IV

From: Chief, Mineral Resources Branch, Mining Division, Region IV

Subject: DMEA 2296, Contract Idm-E278 (Tungsten), Smith and Rugg (Rambler mine), Boulder County, Colorado - Progress report for June 1953

There are enclosed the original and four copies of the above progress report--forms MF-104 and MF-104A, with narrative, progress map, letter to State Compensation Insurance Funds, and required documentation--and the original and six copies of R. L. Bolmer's memorandum covering inspection of the underground progress and June 1953 accounts.

Advance of the 209 drift, 5.5 feet; 208A raise, 20.5 feet; 208 vein split, 8.0 feet; 210 drift, 11.0 feet; 209A raise, 4.0 feet; and 209B raise, 16.0 feet, were all verified correct. Operations are described in the covering memorandum report.

Documentation and accounting procedures conform with the terms of the contract and are approved within the limits of our delegated authority, except:

Item 3, Operating Materials and Supplies	
Miscellaneous	
*Stearns-Roger (Parts for Cp-34 stoper)	$24.79
**C & K Oil (drum deposit)	5.00
Total disallowed	$29.79

*Equipment not listed in contract. Will require an amendment to reclaim.
**Not an allowable cost.

The total disallowed, $29.79 deducted from the $1,691.35 claimed by the contractor, leaves $1,661.56 of the sum $1,246.17, or 75 percent is approved for payment subject to usual Region IV audit.

Wm. Traver

W. M. Traver

enclosures

cc
E278
DMEA Chron.

WMT/pam

UNITED STATES
DEPARTMENT OF THE INTERIOR
BUREAU OF MINES

Region IV

Building 20, Room 137
Denver Federal Center
Denver 14, Colorado
July 24, 1953

Memorandum

To: Chief, Mineral Resources Branch, Mining Division, Region IV

From: R. L. Bolmer

Subject: DMEA 2296, Contract Idm-E278 (Tungsten), Smith and Rugg (Rambler mine), Boulder County, Colorado - Progress report for June 1953

Progress under the subject contract was inspected July 21, 1953, with the operators. The advance reported in the operator's narrative and on form MF-104A was confirmed during the inspection. Most of the progress reported for the period had been completed on the date of an earlier inspection and the conditions encountered therein discussed in the May progress report.

The 209 drift was advanced 5.5 feet during the period. The vein being followed narrowed to 1 inch in width some 92 feet southwest of 204 crosscut, and as the structure had been barren of mineral for some 20 feet, the drift was stopped. Raises 209A and B on the same vein were 30 and 17 feet, respectively, above the back of the drift during the inspection. The vein, as exposed in both raises, contains fairly continuous ferberite over widths from 1/2 to 2 inches. An "iron" dike exposed in B raise contains some ferberite in the dike itself and also along its contact with the granite. The continuation of both raises is approved for as long as mineral is indicated.

Raise 208A had been advanced some 76 feet above the back of 208 drift on the date of inspection. The raise is inclined toward the northeast and has followed the northeastern edge of a 1- to 4-inch ferberite ore body the full distance. The operators believe that the ore exposed in the raise will extend some 35 to 50 feet southwest to the shaft. An 8-inch sample of this vein at a height of 25 feet in the raise assayed 13.5 percent WO_3. The continuation of 208A raise is approved. If the raise does not intersect existing workings on the 90-foot level, some exploration of the vein on or above that level may be advisable.

The operators were given permission to advance the 203 crosscut a few rounds. Other than this crosscut and the three raises presently

being driven, the only additional work contemplated is an exploratory raise on mineralization encountered southwest along the 201 drift.

To date, the work performed by the operators has been efficient. The unit costs experienced for drifting, crosscutting, and raising are well below the average for such work.

Incurred costs in the amount of $1,691.35 are reported this period. Except as noted below, the individual costs reported conform to the provisions of the contract and have been substantiated in the prescribed manner.

Exceptions taken to the costs reported by the operator:

Stearns-Roger (parts for Cp-34 stoper)	$24.79
C & K Oil (drum deposit)	5.00
Total costs not accepted	$29.79
Total accepted costs	$1,661.56

Payment to the operator of 75 percent of the accepted costs, or $1,246.17, is recommended.

R. L. Bolmer

R. L. Bolmer
Mining Engineer

cc 6
E278
DMEA Chron.

RLB/pem

SMITH & RUNG
DMEA - 2296
CONTRACT Idm - E 278
RAMBLER MINE
June - 1953

NARRATIVE REPORT

1. 209 Drift - Advanced from 86.5 feet from center of 204 cross cut to 92.0 feet. Vein pinched down so work here stopped. Advance 5.5 feet.

2. 208-A Raise - Advanced from 21.5 feet above track to 42.0 feet. Nice streak of ferberite showing length of raise. Advance 20.5 feet. All material removed this advance is being saved for milling. Estimated to run 1.5% WO 3.

3. 208 - Split - Advanced 8.0 feet and lost vein. Work stopped.

4. 210 - Drift - Advanced from 10.0 feet from center of 204 cross cut to 21.0 feet. Good looking vein - no ore. Work stopped. Advance 11.0 feet.

5. 209-A Raise - One round shot up on small showing of ore - no improvement - will continue. Advance 4.0 feet.

6. 209-B Raise - Raise started where 209 drift vein cuts iron dike. One inch fair ferberite showing. Advanced to 23.0 feet above track. Advance 16 feet. Total advance all places - 65 feet.

7. Several days lost - On account of compressor breakdown. Oneman on payroll this period.

8. Operating Crew - Four men six (6) days weekly - part of month.

9. Unusual Difficulties - None other than those indicated above.

SMITH & RUNG

Joseph M Smith

Joseph M. Smith, Partner

SMITH & ROGG
DMEA - 2296
CONTRACT Idm -T278

EXPENSE SUMMARY - June , 1953

PAYEE	Ck. No.	TOTAL AMOUNT	(2) LABOR & SUPERVISION Labor	Suprv.	(3) OPERATING SUPPLIES Descrip.	Amt.	(4) OPERATING EQUIPMENT Descrip.	Rental	Depr.	(7) MISCELLANEOUS Item	Amt.
Payroll per summary attached		$1,096.00	$896.00	$200.00							
Payroll taxes - June		9.65								Payroll taxes	$ 9.65
Valentine Hardware Company	163	120.15			Miscellaneous	$7.65				Repairs -Jack Hammer	112.50
State Compensation Insurance Fund	164	14.00								W/Comp. Ins.	14.00
Wilkins & Schone	165	34.75								Accounting	34[illegible]
Stearns Rogers Mfg. Co.	166	24.79			Miscellaneous	24.79					
C & K Oil Company	168	147.53			Gas & Oil	147.53					
Industrial Engineering & Supply Co.	173	204.48			Explosives	102.66	Generator	$75.00			
					Miscellaneous	1.82	Pump	25.00			
Depreciation of Operator's Equipment per contract		40.00					Jackhammer		$ 5.00		
							Compressor		25.00		
							Dump Truck		10.00		
TOTALS		$1,691.35	$896.00	$200.00		$284.45		$100.00	$40.00		$170.90

SMITH & RUGG
DMEA - 2296
CONTRACT Idm - E278

PAYROLL SUMMARY - June, 1953

		1	2	3	4	5	6	7	8	9	10	11	12	13	14	15	TOTAL HOURS Reg.	TOTAL HOURS O.T.	RATES Reg.	RATES O.T.	GROSS WAGES	S.S. TAX	W.H. TAX	NET PAID
	1st Period	1	2	3	4	5	6	7	8	9	10	11	12	13	14	15								
	2nd Period	16	17	18	19	20	21	22	23	24	25	26	27	28	29	30								
RUGG, Charles R.	1st	8	8	8	8	8	8*									8	48	8	$1.75	$2.625	$ 105.00	$	$	$ 105.00
521-14-9903	2nd	8	8	8	8	8*		8	8	8					8	8	72	8	1.75	2.625	147.00			147.00
Miner																								
TYLER, John	1st	8	8	8	8	8	8*										40	8	1.75	2.625	91.00	1.37		89.63
522-09-2131	2nd																							
Miner																								
PETROVIC, Eivan	1st	8	8	8	8	8	8*		8	8	8	8	8	8*		8	88	16	1.75	2.625	196.00	2.94	6.30	186.76
523-42-8048	2nd	8	8	8	8	8*		8	8	8	8	8	8*		8	8	88	16	1.75	2.625	196.00	2.94	6.30	186.76
Hoistman																								
SMITH, Michael	1st								8	8	8	8	8	8*		8	48	8	1.75	2.625	105.00	1.58	15.40	88.02
523-40-7790	2nd	8	8	8												8	32		1.75		56.00	.84	5.80	49.36
Miner																	TOTAL LABOR				$ 896.00	$ 9.67	$ 33.80	$852.53
SMITH, Joseph M.	1st								8	8	8	8	8	8*		8	48	8	2.00	3.00	$ 120.00			$ 120.00
522-07-9589	2nd	8										8	8		8	8	40		2.00		80.00			80.00
Supervisor																	SUPERVISION				$ 200.00			$ 200.00
																	TOTAL LABOR & SUPERVISION . . .				$1096.00	$ 9.67	$ 33.80	$1052.53

* - Overtime

Certified to be a true summary of subject payroll for June, 1953.

AW Chow

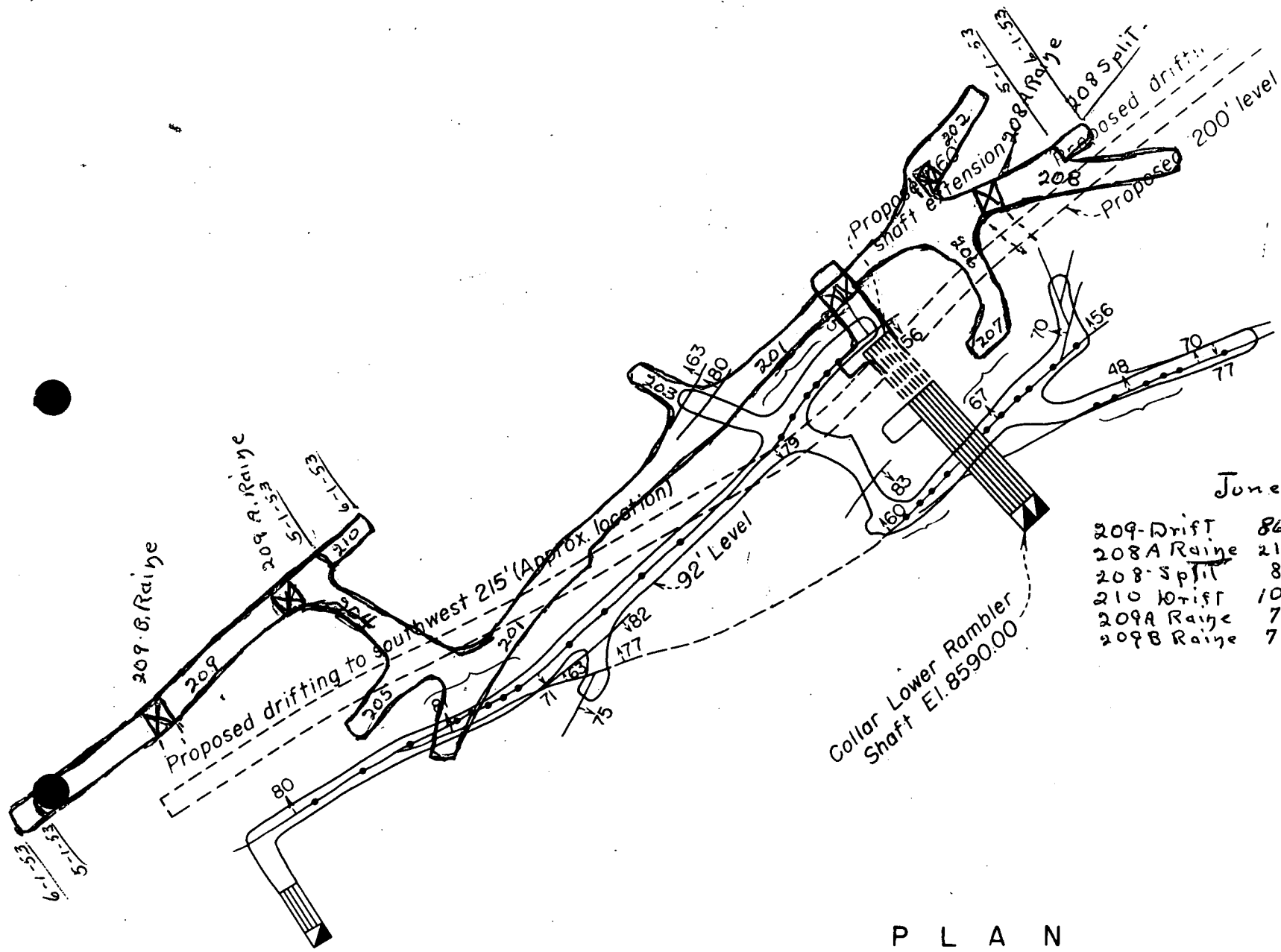

June - 1953 -

			Advance
209-Drift	86.5 To 92.		5.5
208A Raine	21.5 To 42.		20.5
208-Split	8. To 16.		8.
210 Drift	10. To 21.		11.
209A Raine	7. To 11.		4.
209B Raine	7. To 23.		16.
			65.0 FT -

P L A N

(SHOWING PRESENT WORKINGS & PROPOSED EXPLORATION)

30 0 30 60 90

SCALE OF FEET

Form M-101 (Rev.)
(April 1952)

DEPARTMENT OF THE INTERIOR
Bureau of Mines
RECEIVED
JUL 13 1953

Budget Bureau No. 42-R1036.3.
Approval expires 6-30-53.

UNITED STATES
DEPARTMENT OF THE INTERIOR
DEFENSE MINERALS EXPLORATION ADMINISTRATION
OPERATOR'S MONTHLY REPORT AND VOUCHER

Month of May, 1953 Docket No. DMEA 2296 Contract No. Idm E 278
Operator's Name Smith & Rugg Minerals Tungsten
Address P. O. Box 354 - Nederland, Colorado
Contract Amount, $ 24,400.00 Government Participation: 75% Amount, $ 18,300.00

ITEMS OF COSTS	FOR OPERATOR'S USE			FOR GOVERNMENT USE ONLY		
	Monthly Total	Totals Previously Reported	Totals To Date	Approved Monthly Total	Approved Totals Previously Reported	Approved Totals To Date
(1) Independent Short Form Contracts:						
Drilling						
Bulldozing						
Crosscutting						
Drifting						
(2) Labor and Supervision:						
Labor	1029.00	5355.70	6384.70			
Supervision	264.00	3344.00	3608.00			
Technical Services						
(3) Operating Mat'ls. and Supplies:						
Timber		56.33	56.33			
Explosives	233.07	1372.92	1605.99			
Pipe		174.17	174.17			
Track		71.37	71.37			
Miscellaneous	269.43	1912.50	2181.93			
(4) Operating Equipment:						
Rental	150.00	825.00	975.00			
Purchase		198.90	198.90			
Depreciation	40.00	330.00	370.00			
(5) Initial Rehabilitation and Repairs		66.84	66.84			
(6) New Bldgs., Improvements, etc.						
(7) Miscellaneous:						
Repairs to Equipment		184.16	184.16			
Sampling and Analysis		4.00	4.00			
Payroll Taxes	11.98	35.75	47.73			
Liability Insurance W/Comp.	55.00	376.00	431.00			
Accounting	45.75	367.25	413.00			
Hauling Equipment		12.88	12.88			
(8) Contingencies (specify):						
TOTALS	2098.23	14,687.77	16,786.00	2098.23	14,687.77	16,786.00

I certify that the above bill is correct and just and that payment therefor has not been received.

Date June 11, 1953 Payee Smith & Rugg

Per Joseph M. Smith Title Partner

*When a voucher is signed or receipted in the name of a company or corporation, the name of the person writing the company or corporate name, as well as the capacity in which he signs, must appear. For example: "John Doe Company, per John Smith, Secretary," or "Treasurer," as the case may be.

NOTE.—Title 18, U. S. Code (Crimes), section 1001, makes it a criminal offense to make a willfully false statement or representation to any department or agency of the United States as to any matter within its jurisdiction.

(Instructions on reverse)

Pursuant to authority vested in me, I certify that this account is correct and proper for payment in the amount of:

$1673.67

Signature (Authorized Certifying Officer)

Date 7/7/53 Voucher No. DMA 54-6

(See other side)

(For Government use only)

CERTIFICATION BY GOVERNMENT REPRESENTATIVE:

I certify that to the best of my knowledge and belief the contractor submitting this voucher is operating a Defense Minerals Exploration Administration project under Contract No. E-278 in accordance with the terms of the contract.

Signature R. L. Palmer, #157367 Title Mining Engineer Date June 23, 1953

APPROVAL BY DMEA EXECUTIVE OFFICER OR ALTERNATE: R.S.R.

Signature W. H. King Title Executive Officer Date JUL - 3 1953

MONTHLY REPORT OF OPERATOR

The Operator (Contractor) of an exploration project is required to make a monthly report to the Government through the Regional Executive Officer. This report consists of three parts as follows:

(a) *Form MF-104—Operator's Monthly Report and Voucher.*—This form details expenditures and constitutes a voucher for reimbursing the Operator for the Government's share of costs;

(b) *Form MF-104A—Operator's Unit Cost and Progress Report.*—This is a statistical report of expenditures which shows costs for the various types of operation; and

(c) *Narrative.*—A concise narrative description of progress made, results accomplished, and any unusual difficulties encountered must be furnished as an attachment to this Report and Voucher. Wherever possible, the narrative is to be illustrated with maps or sketches showing formations penetrated and location and assays of samples taken as well as advances in workings. In the case of diamond drilling or churn drilling, the location and inclination of holes is to be shown on a map; logs and assays also are to be submitted.

The Monthly Report of Operator should be prepared in an original and four copies all of which must be sent to the Executive Officer of the Region not later than the 15th of the month following.

Preparation of Form MF-104—Operator's Monthly Report and Voucher.—All the applicable spaces in Form MF-104 should be filled in by the Operator, and the Operator or his agent should sign the certification in the lower left corner of the form.

The items of costs are arranged in the order they appear in Article 6 (a) of Form MF-200 (Revised February 1952), however, this form is readily adaptable for use in reporting activities under other contract forms.

Under Item (1) delete words "Short Form" if the contract is a sub-contract under Form MF-200; and delete word "Independent" if the contract reported is on Form MF-200 (A). Also, report work paid for on a unit basis under contract Form MF-200 as though it were performed under an independent contract.

Under Item (2) include labor, supervision and technical services incurred for the exploratory operations. Do not include labor, supervision and technical services used for work performed under items (5) and (6).

Under Item (3) include the costs of material and supplies used in the project other than that used under items (5) and (6).

Under Item (4) appear the three types of operating equipment expenditures, that is, rental, purchase and depreciation. The expenditures made for renting equipment belonging to a third party will be reported under "Rental". The amount paid or duly obligated for payment for the purchase of equipment will be reported under "Purchase". The amount of expenditures due the Operator to reimburse him for depreciation of equipment owned will be reported under "Depreciation".

Item (5) comprises costs of labor, supervision, technical services, materials, etc., which are used in the initial rehabilitation and repair of existing buildings, installations, fixtures, and equipment. These costs, therefore, should not be reported under items (2) and (3).

Item (6) includes the labor, supervision, technical services, materials, etc., used in the installation or construction of new buildings, fixed improvements, etc., necessary for the project. These costs, therefore, should not be reported under items (2) and (3).

Item (7) covers miscellaneous types of expenditure such as payroll taxes, liability insurance, workmen's compensation insurance, repairs to equipment and sampling and analysis. Only that part of payroll taxes, liability insurance and workmen's compensation which are paid by the operator should be reported under item (7). The share paid by the employee as a payroll deduction is to be included under item (2) as labor costs.

Item (8) includes any unforeseen costs not included in the other seven categories.

The original of Form MF-104 when submitted for reimbursable expenses incurred under contract Form MF-200 must be supported by original documentation or by certified copies of purchase orders, payrolls or transcripts of payrolls, unless such documentation has been waived by the Regional Executive Officer. This certification may be stated thus, "Certified True Copy (or Transcript)", followed by appropriate signature. If the Executive Officer of the Region determines that a contract under Form MF-200 should have an "on-site" audit, that is, a Government auditor should make an audit of the Operator's books and records of account, the Operator need not support his monthly voucher with original or certified documents except in cases of equipment purchases whose individual costs exceed $50.00. In these cases the original or a certified copy of the purchase order or invoice should be attached to the Monthly Voucher. N. B.—Only the *original* of Form MF-104 is required to be documented. The four copies of Form MF-104 are not to be thus supported.

Form MF-104 submitted for reimbursement under fixed price contracts on Form MF-200 (A), however, are not required to be supported by documentation of any kind. The Operator will submit his claim under item (1) of Form MF-104 by deleting as stated above the word "Independent" and by showing the number of feet or other units immediately after the appropriate descriptive word, such as, drilling, bulldozing, crosscutting, drifting, etc., and giving the "Monthly Total" amount due. "Totals Previously Reported", and "Totals to Date" columns should also be filled in.

U. S. GOVERNMENT PRINTING OFFICE 205675

Form MF-104A
(April 1952)

Budget Bureau No. 42-R1151
Approval expires 6-30-53.

UNITED STATES
DEPARTMENT OF THE INTERIOR

DEFENSE MINERALS EXPLORATION ADMINISTRATION

RECEIVED
JUL 13 1953

OPERATOR'S UNIT COST AND PROGRESS REPORT

Month of May 1953 Docket No. DMEA 2296 Contract No. Idm E 278
Operator's Name Smith & Rugg Minerals Tungsten
Address P. O. Box 354 - Nederland, Colorado

OPERATION	UNIT	COSTS THIS MONTH	UNITS THIS MONTH	COSTS TO DATE	UNITS TO DATE	UNIT COSTS TO DATE	AUTHORIZED BY CONTRACT Units	AUTHORIZED BY CONTRACT Unit Costs
Drifting	feet	2022.69	79	8367.04	401	20.85	515	
Crosscutting	feet			2619.15	110	23.81	125	
Raising	feet	75.54	2	1551.72	53.5	29.00	50	
Shafts	feet			2785.94	35	79.59	60	
Winzes								
Drilling: Core								
Churn								
Auger								
Stripping								
Trenching								
Test Pits								
Roads and Trails								
Underground Rehabilitation				1196.41				
TOTAL DISTRIBUTED COSTS		2098.23	81	16,520.26	599.5			TOTAL COSTS AUTHORIZED BY CONTRACT
Operating Equipment Purchased				198.90				305.00
Initial Rehabilitation and Repairs				66.84				250.00
New Buildings, Improvements, etc.								
TOTAL COSTS		2098.23		16,786.00				24,400.00

The undersigned company, and the official executing this certification on its behalf, hereby certify that the information contained in this report is correct and complete to the best of their knowledge and belief.

Date June 11, 1953 Operator Smith & Rugg
Per Joseph M Smith Title Partner

NOTE.—Title 18, U. S. Code (Crimes), section 1001, makes it a criminal offense to make a willfully false statement or representation to any department or agency of the United States as to any matter within its jurisdiction.

(Instructions on reverse)

REMARKS: Operating costs allocated on basis of labor costs for each operation during May, as follows:

	Labor	Percent
Drifting	$1,247.00	96.4
Raising	46.00	3.6
	$1,293.00	100.0%

(For Government use only)

INSTRUCTIONS

Preparation of Form MF-104A—Operator's Unit Cost and Progress Report.—Applicable places on Form 104A should be filled in by the Operator. The purpose of this form is twofold as follows: (1) to furnish the supervising engineers and other administrators with statistical information necessary to better determine the progress of the project; and (2) to furnish more permanent information on mining costs for future use. The more important phases of operation on which permanent information is desired have been outlined in the form. There are blank lines, however, for those unusual phases which may need to be reported for a particular project. It will be necessary for the Operator to distribute his costs among the applicable phases reported with the exception of three items the costs of which are not to be distributed by the Operator. These three items are: "Operating Equipment Purchased", "Initial Rehabilitation and Repairs", and "New Buildings, Improvements, etc." The reason for not distributing these items on a monthly basis is doubtless clear, to the Operator, since such distribution might well overstate the cost for any one month or period short of the entire contract period.

Form MF-104A has been designed to tie in with Form MF-104 for both monthly and cumulative costs. The "Total Costs" on Form MF-104A for each month should equal the monthly "Total Costs" as reported on Form MF-104. This is also true of the "Total Costs To Date".

In preparing Form MF-104A, it will be necessary frequently to distribute certain costs over a number of items. For instance, supervisory and engineering costs may have to be distributed over several phases, such as, drifting, crosscutting, raising, etc., provided that these items were reported active for the month. Such distributions should be made on the basis of time spent on the various phases, on man days of labor charged to such phases, or on some other equitable basis. "Operating Equipment", "Initial Rehabilitation and Repairs", and "New Buildings Improvements, etc.", will be distributed to the several phases of the project by the Washington Office of DMEA at the close of the project if determined necessary. The last two columns headed "Authorized by Contract" will be filled in by the Operator if such information is found in the contract. This information is usually a part of Exhibit "A" of the contract. A space for remarks has been provided for the use of the Operator to call attention to any unusual circumstances causing excessive or disproportionate unit costs.

U. S. GOVERNMENT PRINTING OFFICE 205676

UNITED STATES
DEPARTMENT OF THE INTERIOR
DEFENSE MINERALS EXPLORATION ADMINISTRATION
WASHINGTON 25, D. C.

RECEIVED
JUL 13 1953

224 New Customhouse
Denver 2, Colorado

July 3, 1953

Memorandum

To: T. A. Christensen

From: Executive Officer, DMEA Field Team, Region IV

Subject: DMEA Docket 2296, Contract Idm-E278 (Tungsten), Smith and Rugg (Rambler Mine), Boulder County, Colorado - Operator's Monthly Progress Report, for the period May, 1953.

Enclosed are the original and four copies of Form MF-104 and Form MF-104A, Narrative Report, and Engineer's Report for the above period.

Work has been accomplished as authorized in the contract and payment is recommended for 75 percent of the amount as reported on Form MF-104, contingent on your verification of the correctness of applicable rates and arithmetical accuracy of computations.

Remarks:

Date of Report----------June 11, 1953
Date Received in Field Office----------June 12, 1953
Date Received in Region Office----------July 1, 1953
Date Processed for Payment----------July 2, 1953

W. H. King
W. H. King

Enclosures

RDB:es

cc: Contract
Sec. to Oper. Comm. (2)
Chron.
Traver

UNITED STATES
DEPARTMENT OF THE INTERIOR
BUREAU OF MINES

Region IV

Building 20, Room 137
Denver Federal Center
Denver 14, Colorado
July 1, 1953

Memorandum

To: Executive Officer, Field Team, Region IV

From: Chief, Mineral Resources Branch, Mining Division, Region IV

Subject: DMEA 2296, Contract Idm-E278 (Tungsten), Smith and Rugg (Rambler mine), Boulder County, Colorado - Progress report for May 1953

Submitted herewith are the original and four copies of the subject progress report--forms MF-104 and MF-104A, with narrative, progress map, and required documentation--and the original and six copies of R. L. Bolmer's memorandum covering inspection of the underground progress and accounts for May 1953.

The progress comprising 71 feet advance of the 209 drift, 2 feet advance of the 208-A raise, and 8 feet of slabbing the 208 drift are correctly reported in the narrative and entered on the MF-104A form. Physical conditions are adequately described in the memorandum, and the assays of samples taken during the May inspection are reported.

The accounting and documentation conforms with the terms of the contract and are approved within the limits of our delegated authority to verify them.

Payment is approved and certified on the MF-104 form of $1,573.67, or 75 percent of the total $2,098.23 claimed by the contractor, subject to usual Region IV audit.

W. M. Traver

W. M. Traver

enclosures

WMT/pam

cc: 4
E278
DMEA Chron.

UNITED STATES
DEPARTMENT OF THE INTERIOR
BUREAU OF MINES

Region IV

Building 20, Room 137
Denver Federal Center
Denver 14, Colorado
July 1, 1953

Memorandum

To: Chief, Mineral Resources Branch, Mining Division, Region IV

From: R. L. Bolner

Subject: DMEA 2296, Contract Idm-8278 (Tungsten), Smith and Rugg (Rambler mine), Boulder County, Colorado - Progress report for May 1953

Progress under the subject contract was inspected June 17, 1953, with C. R. Rugg. The progress reported in the operator's May narrative, 71 feet of advance in 209 drift, 2 feet of advance in 208-A raise, and 8 feet of slabbing along 208 drift, was confirmed during the inspection. The advance is shown correctly on the operator's map.

On the date of inspection, the shear zone exposed in the hanging wall of 208 drift had been prospected by a short drift, the breast of which measured 21 feet from the center of 208 drift. The zone, which had shown some quartz and gouge in 208 drift, tightened and was barren of ferberite within this distance. Further work is not anticipated here.

Raise 208-A was measured as 25 feet above the back of 208 drift. An 8-inch quartz vein in granite, containing 2 to 2-1/2 inches of high-grade ferberite, was exposed for 10 feet across the back of the raise. A sample (RLB-37) was taken across the vein at this location. A sample (RLB-32) across 2-1/2 inches of mineral taken May 19, 1953, at a 14-foot height in the raise assayed 21.9 percent WO_3. Although the mineral in this raise is narrow, it is pure and easy to concentrate and is considered commercial by the operators. Material removed to date from this raise has been concentrated to 55-60 percent WO_3 at the operator's mill.

The vein in 209 drift continued similar to the description given in the April report. Narrow streaks of high-grade ferberite are exposed intermittently along the vein to the breast, 86-1/2 feet from 204 crosscut. Two raises have been started on the most favorable mineral showing along the drift, 5 and 24 feet southwest of the crosscut. The raises, respectively 4 and 12 feet above the back of the drift, each expose about 2 inches of mineral in the vein. Drift 210,

also on this vein, had been advanced to 21 feet northeast of the crosscut on the date of inspection. In the breast, the vein consisted of 4 to 5 inches of quartz but contained no mineral. The operator was given permission to extend crosscut 203 a few rounds in an attempt to cut this vein some 90 feet northeast of the breast of 210 drift.

The analyses of samples RLB-30 and -31, taken May 19, 1953, of this vein and its mineral streak at the junction of 204 crosscut and 209-10 drifts, are as follows:

RLB-30	(over 15-inch vein)	6.8 percent WO_3
RLB-31	(over 3-inch mineral streak in vein)	29.1 percent WO_3

The Operator's Monthly Report and Voucher, form MF-104, and supporting documents for May 1953 have been reviewed and appear in order. Incurred costs totaling $2,098.23 have been reported. The costs, as reported, are reasonable and justified and are approved.

Payment of 75 percent of the amount reported by the operator, or $1,573.67, is recommended.

R. L. Bolmer

R. L. Bolmer
Mining Engineer

RLB/pam

cc: 6
E278
DMEA Chron.

SMITH & RUGG
DMEA - 2296
Contract Idm: E 278
May, 1953

NARRATIVE REPORT

1- 209 - Drift. Advanced from 15.5 ft. from center of 204 crosscut to 86.5 ft., following small streak of ferberite in good vein most of distance. Advance - 71. feet this month.

2- 208 A-Raise. Advanced from 19.5 ft above track to 21.5 ft.. Nice streak of ferberite showing length of raise. ½ inch to 6 inches of approximately 15% ore. Advance - 2 feet.

3- 208 - Split. Two slab rounds in hanging wall of 208 drift beginning 36 ft. from center of 206 crosscut. Have exposed good vein with quartz running N-50° East. Advance - 8 feet.

4- Total advance All places 81. feet.

5- Operating Crew. Three men working six days weekly, all of month.

6- Delays and Difficulties. Short delay replacing connecting rod in compressor.

7- Pump operating Six hours daily.

SMITH & RUGG

By Joseph M Smith

SMITH & RUGG
DMEA - 2296
CONTRACT - Idm E 278

EXPENSE SUMMARY - May, 1953

PAYEE	CK. NO.	TOTAL AMOUNT	(2) LABOR & SUPERVISION Labor	Suprv.	(3) OPERATING SUPPLIES Descript	Amt.	(4) OPERATING EQUIPMENT Descript.	Rental	Depr.	MISCELLANEOUS Item	Amt.
Payroll - per summary attached		$1,293.00	$1,029.00	$264.00							
Payroll tax accrued for May		11.98								payroll Taxes	11.98
Ingersoll Rand	146	28.10			Misc	28.10					
C. & K. Oil Company	151	193.34			Gas & Oil	193.34					
Wilkins & Schone	154	45.75								Acct'g	45.75
State Comp. Ins. Fund	155	55.00								W/Comp Ins.	55.00
Industrial Engineering & Supply Co.	156	410.37			Misc.	27.30	Pump	37.50			
					Explosives	233.07	Generator	112.50			
icks Corner Service	157	20.69			Gas & Oil etc	20.69					
Depreciation of Operators Equipment per contract		40.00					Compressor		25.00		
							Jack Hammer		5.00		
							Dump Truck		10.00		
TOTALS		$2,098.23	$1,029.00	$264.00		$502.50		$150.00	$40.00		$112.73

SMITH & RUGG
DMEA - 2296
CONTRACT - Idm E 278

PAYROLL SUMMARY - May, 1953

	1st Period / 2nd Period	1	2	3	4	5	6	7	8	9	10	11	12	13	14	15	16	17	18	19	20	21	22	23	24	25	26	27	28	29	30	31	TOTAL HOURS Reg	TOTAL HOURS O.T.	RATES Reg	RATES O.T.	GROSS	S. S.	W.T.	NET PAID
Smith, Joseph M	1st	8	8*		8	8	8	8	8	8*																							48	16	$2.00	$3.00	$ 144.00			$ 144.00
522-07-9589 Supervisor	2nd								8		8	8	8	8	8	8*																	48	8	2.00	3.00	120.00			120.00
											Total Supervision																									264.00			264.00
Rugg, Charles R.	1st	8	8*							8		8	8	8	8	8																	56	8	1.75	2.625	119.00			119.00
521-14-9903 Miner	2nd	8*		8	8	8	8	8	8*																								40	16	1.75	2.625	112.00			112.00
Tyler, John T.	1st	8	8*		8	8	8	8	8	8*		8	8	8	8	8																	88	16	1.75	2.625	196.00	$2.94	$6.30	186.76
522-09-2131 [illegible]er	2nd	8*		8	8	8	8	8	8*		8	8	8	8	8	8*																	80	24	1.75	2.625	203.00	3.04	7.70	192.26
Petrovic, Evan	1st	8	8		8	8	8	8	8	8*		8	8	8	8	8																	88	16	1.75	2.625	196.00	2.94	6.30	186.76
523-42-8048 Hoistman	2nd	8*		8	8	8	8	8	8*		8	8	8	8	8	8*																	80	24	1.75	2.625	203.00	3.04	7.70	192.26
											Total Labor and Supervision																									$1,293.00	$11.96	$28.00	$1,253.04

Certified to be a true summary of subject payroll for May, 1953

Alex Schone

* Overtime

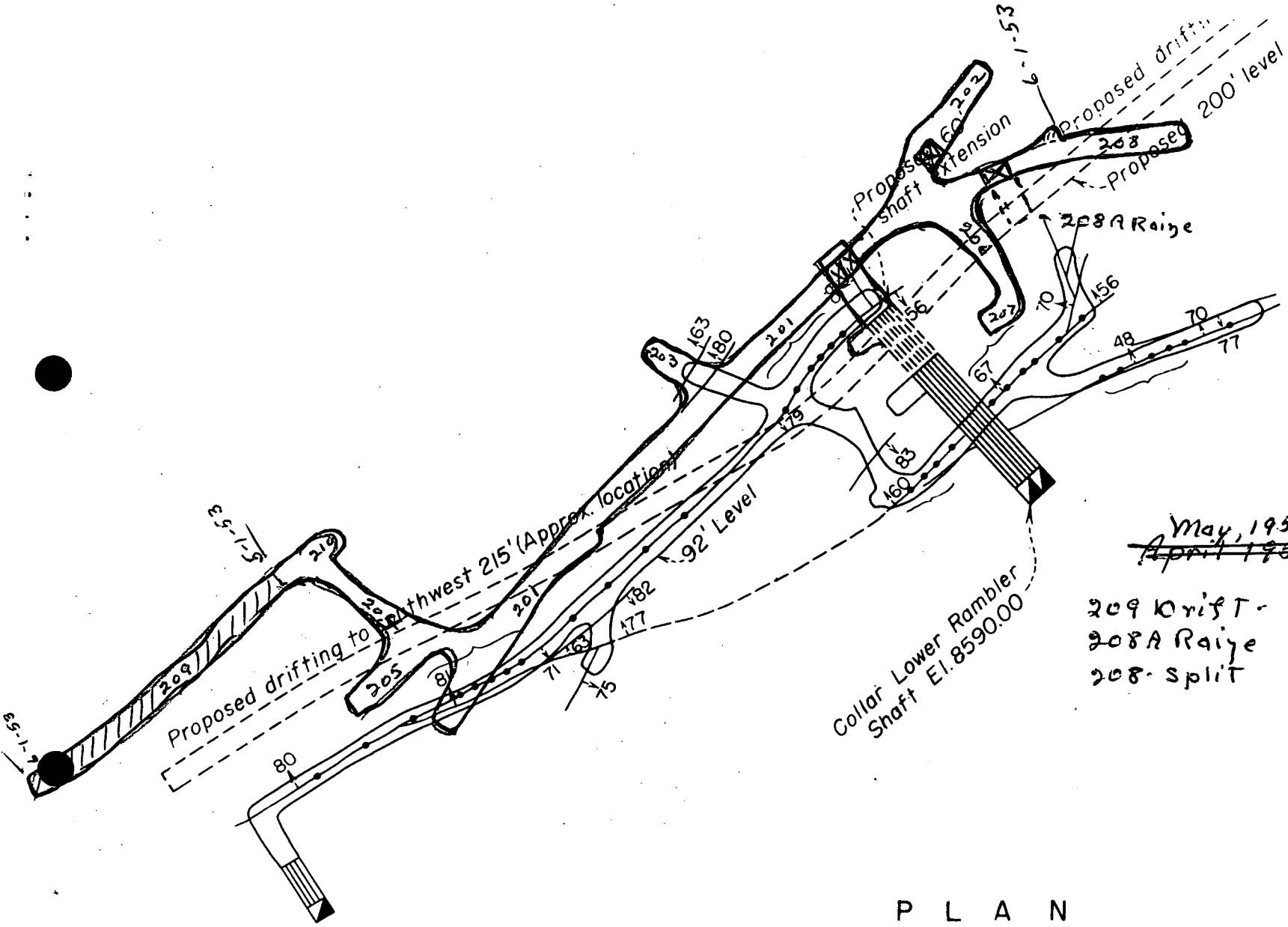

May, 1953
~~April 1953~~

209 Drift -	15.5 To	86.5
208A Raise	19.5 To	21.5
208 - split	0. To	12.

P L A N

(SHOWING PRESENT WORKINGS & PROPOSED EXPLORATION)

30 0 30 60 90

SCALE OF FEET

Form MF-104 (Rev.)
(April 1952)

Budget Bureau No. 42-R1036.3.
Approval expires 6-30-53.

UNITED STATES
DEPARTMENT OF THE INTERIOR
DEFENSE MINERALS EXPLORATION ADMINISTRATION

OPERATOR'S MONTHLY REPORT AND VOUCHER

Month of April, 1953 Docket No. DMEA 2296 Contract No. E 278

Operator's Name Smith & Rugg Minerals Tungsten

Address P.O. Box 354, Nederland, Colorado

Contract Amount, $24,400.00 Government Participation: 75 % Amount, $ 18,300.00

ITEMS OF COSTS	FOR OPERATOR'S USE			FOR GOVERNMENT USE ONLY		
	Monthly Total	Totals Previously Reported	Totals To Date	Approved Monthly Total	Approved Totals Previously Reported	Approved Totals To Date
(1) Independent Short Form Contracts:						
Drilling						
Bulldozing						
Crosscutting						
Drifting						
(2) Labor and Supervision:						
Labor	154.00	5201.70	5355.70			
Supervision	176.00	3168.00	3344.00			
Technical Services						
(3) Operating Mat'ls. and Supplies:						
Timber		56.33	56.33			
Explosives		1372.92	1372.92			
Pipe		174.17	174.17			
Track		71.37	71.37			
Miscellaneous	51.73	1860.77	1912.50			
(4) Operating Equipment:						
Rental		825.00	825.00			
Purchase		198.90	198.90			
Depreciation	20.00	310.00	330.00			
(5) Initial Rehabilitation and Repairs		66.84	66.84			
(6) New Bldgs., Improvements, etc.						
(7) Miscellaneous:						
Repairs to Equipment		184.16	184.16			
Sampling and Analysis		4.00	4.00			
Payroll Taxes		35.75	35.75			
Liability Insurance	10.00	366.00	376.00			
Bookkeeping	26.25	341.00	367.25			
Hauling Equipment		12.88	12.88			
(8) Contingencies (specify):						
TOTALS	437.98	14,249.79	14,687.77	437.98	14249.79	14687.77

I certify that the above bill is correct and just and that payment therefor has not been received.

Date 5/14/53 *Payee Smith & Rugg

Per Joseph M. Smith Title Partner

*When a voucher is signed or receipted in the name of a company or corporation, the name of the person writing the company or corporate name, as well as the capacity in which he signs, must appear. For example: "John Doe Company, per John Smith, Secretary," or "Treasurer," as the case may be.

→ NOTE.—Title 18, U. S. Code (Crimes), section 1001, makes it a criminal offense to make a willfully false statement or representation to any department or agency of the United States as to any matter within its jurisdiction.

(Instructions on reverse)

Pursuant to authority vested in me, I certify that this account is correct and proper for payment in the amount of:

$ 328.48

Signature [illegible] (Authorized Certifying Officer)

Date 6-11-53 Vou. No. 53-145

(See other side)

(For Government use only)

CERTIFICATION BY GOVERNMENT REPRESENTATIVE:

I certify that to the best of my knowledge and belief the contractor submitting this voucher is operating a Defense Minerals Exploration Administration project under Contract No. E-278 in accordance with the terms of the contract.

Signature R. R. Belmer, $328.48 WMF Title Mining Engineer Date May 21, 1953

APPROVAL BY DMEA EXECUTIVE OFFICER OR ALTERNATE: R.D.B.

Signature W. H. King Title Executive Officer Date MAY 29 1953

MONTHLY REPORT OF OPERATOR

The Operator (Contractor) of an exploration project is required to make a monthly report to the Government through the Regional Executive Officer. This report consists of three parts as follows:

(a) *Form MF-104—Operator's Monthly Report and Voucher.*—This form details expenditures and constitutes a voucher for reimbursing the Operator for the Government's share of costs;

(b) *Form MF-104A—Operator's Unit Cost and Progress Report.*—This is a statistical report of expenditures which shows costs for the various types of operation; and

(c) *Narrative.*—A concise narrative description of progress made, results accomplished, and any unusual difficulties encountered must be furnished as an attachment to this Report and Voucher. Wherever possible, the narrative is to be illustrated with maps or sketches showing formations penetrated and location and assays of samples taken as well as advances in workings. In the case of diamond drilling or churn drilling, the location and inclination of holes is to be shown on a map; logs and assays also are to be submitted.

The Monthly Report of Operator should be prepared in an original and four copies all of which must be sent to the Executive Officer of the Region not later than the 15th of the month following.

Preparation of Form MF-104—Operator's Monthly Report and Voucher.—All the applicable spaces in Form MF-104 should be filled in by the Operator, and the Operator or his agent should sign the certification in the lower left corner of the form.

The items of costs are arranged in the order they appear in Article 6 (a) of Form MF-200 (Revised February 1952), however, this form is readily adaptable for use in reporting activities under other contract forms.

Under Item (1) delete words "Short Form" if the contract is a sub-contract under Form MF-200; and delete word "Independent" if the contract reported is on Form MF-200 (A). Also, report work paid for on a unit basis under contract Form MF-200 as though it were performed under an independent contract.

Under Item (2) include labor, supervision and technical services incurred for the exploratory operations. Do not include labor, supervision and technical services used for work performed under items (5) and (6).

Under Item (3) include the costs of material and supplies used in the project other than that used under items (5) and (6).

Under Item (4) appear the three types of operating equipment expenditures, that is, rental, purchase and depreciation. The expenditures made for renting equipment belonging to a third party will be reported under "Rental". The amount paid or duly obligated for payment for the purchase of equipment will be reported under "Purchase". The amount of expenditures due the Operator to reimburse him for depreciation of equipment owned will be reported under "Depreciation".

Item (5) comprises costs of labor, supervision, technical services, materials, etc., which are used in the initial rehabilitation and repair of existing buildings, installations, fixtures, and equipment. These costs, therefore, should not be reported under items (2) and (3).

Item (6) includes the labor, supervision, technical services, materials, etc., used in the installation or construction of new buildings, fixed improvements, etc., necessary for the project. These costs, therefore, should not be reported under items (2) and (3).

Item (7) covers miscellaneous types of expenditure such as payroll taxes, liability insurance, workmen's compensation insurance, repairs to equipment and sampling and analysis. Only that part of payroll taxes, liability insurance and workmen's compensation which are paid by the operator should be reported under item (7). The share paid by the employee as a payroll deduction is to be included under item (2) as labor costs.

Item (8) includes any unforeseen costs not included in the other seven categories.

The original of Form MF-104 when submitted for reimbursable expenses incurred under contract Form MF-200 must be supported by original documentation or by certified copies of purchase orders, payrolls or transcripts of payrolls, unless such documentation has been waived by the Regional Executive Officer. This certification may be stated thus, "Certified True Copy (or Transcript)", followed by appropriate signature. If the Executive Officer of the Region determines that a contract under Form MF-200 should have an "on-site" audit; that is, a Government auditor should make an audit of the Operator's books and records of account, the Operator need not support his monthly Voucher with original or certified documents except in cases of equipment purchases whose individual costs exceed $50.00. In these cases the original or a certified copy of the purchase order or invoice should be attached to the Monthly Voucher. N. B.—Only the *original* of Form MF-104 is required to be documented. The four copies of Form MF-104 are not to be thus supported.

Form MF-104 submitted for reimbursement under fixed price contracts on Form MF-200 (A), however, are not required to be supported by documentation of any kind. The Operator will submit his claim under item (1) of Form MF-104 by deleting as stated above the word "Independent" and by showing the number of feet or other units immediately after the appropriate descriptive word, such as, drilling, bulldozing, crosscutting, drifting, etc., and giving the "Monthly Total" amount due. "Totals Previously Reported", and "Totals to Date" columns should also be filled in.

U. S. GOVERNMENT PRINTING OFFICE 205675

Form MF-104A
(April 1952)

Budget Bureau No. 42-R1151
Approval expires 6-30-53.

UNITED STATES
DEPARTMENT OF THE INTERIOR

DEFENSE MINERALS EXPLORATION ADMINISTRATION

OPERATOR'S UNIT COST AND PROGRESS REPORT

Month of April 1953 Docket No. DMEA 2296 Contract No. E-278
Operator's Name Smith & Rugg Minerals Tungsten
Address P.O. Box 354, Nederland, Colorado

OPERATION	UNIT	COSTS THIS MONTH	UNITS THIS MONTH	COSTS TO DATE	UNITS TO DATE	UNIT COSTS TO DATE	AUTHORIZED BY CONTRACT Units	AUTHORIZED BY CONTRACT Unit Costs
Drifting	feet	$159.42	8	6344.35	322	19.70	515	
Crosscutting	feet			2619.15	110	23.81	125	
Raising	feet			1476.18	53.5	27.59	50	
Shafts	feet			2785.94	35.0	79.60	60	
Winzes								
Drilling: Core								
Churn								
Auger								
Stripping								
Trenching								
Test Pits								
~~Roads and Trails~~ Underground Rehabilitation		278.56		1196.41				
TOTAL DISTRIBUTED COSTS		$437.98	8	14422.03				TOTAL COSTS AUTHORIZED BY CONTRACT
Operating Equipment Purchased				198.90				305.00
Initial Rehabilitation and Repairs				66.84				250.00
New Buildings, Improvements, etc.								
TOTAL COSTS		437.98		14687.77				

The undersigned company, and the official executing this certification on its behalf, hereby certify that the information contained in this report is correct and complete to the best of their knowledge and belief.

Date 5/7/53 Operator Smith & Rugg
Per Joseph M Smith Title Partner

NOTE.—Title 18, U. S. Code (Crimes), section 1001, makes it a criminal offense to make a willfully false statement or representation to any department or agency of the United States as to any matter within its jurisdiction.

(Instructions on reverse)

REMARKS Operating costs for April, 1953 allocated on basis of labor costs for each operation during April, as follows:

		Labor Percentage
Drifting	120.00	36.4
Re-habilitation*	210.00	63.6
	$330.00	100.0%

* Unwatering and cleanup

(For Government use only)

INSTRUCTIONS

Preparation of Form MF–104A—Operator's Unit Cost and Progress Report.—Applicable places on Form 104A should be filled in by the Operator. The purpose of this form is twofold as follows: (1) to furnish the supervising engineers and other administrators with statistical information necessary to better determine the progress of the project; and (2) to furnish more permanent information on mining costs for future use. The more important phases of operation on which permanent information is desired have been outlined in the form. There are blank lines, however, for those unusual phases which may need to be reported for a particular project. It will be necessary for the Operator to distribute his costs among the applicable phases reported with the exception of three items the costs of which are not to be distributed by the Operator. These three items are: "Operating Equipment Purchased", "Initial Rehabilitation and Repairs", and "New Buildings, Improvements, etc." The reason for not distributing these items on a monthly basis is doubtless clear to the Operator, since such distribution might well overstate the cost for any one month or period short of the entire contract period.

Form MF–104A has been designed to tie in with Form MF–104 for both monthly and cumulative costs. The "Total Costs" on Form MF–104A for each month should equal the monthly "Total Costs" as reported on Form MF–104. This is also true of the "Total Costs To Date".

In preparing Form MF–104A, it will be necessary frequently to distribute certain costs over a number of items. For instance, supervisory and engineering costs may have to be distributed over several phases, such as, drifting, crosscutting, raising, etc., provided that these items were reported active for the month. Such distributions should be made on the basis of time spent on the various phases, on man days of labor charged to such phases, or on some other equitable basis. "Operating Equipment", "Initial Rehabilitation and Repairs", and "New Buildings Improvements, etc.", will be distributed to the several phases of the project by the Washington Office of DMEA at the close of the project if determined necessary. The last two columns headed "Authorized by Contract" will be filled in by the Operator if such information is found in the contract. This information is usually a part of Exhibit "A" of the contract. A space for remarks has been provided for the use of the Operator to call attention to any unusual circumstances causing excessive or disproportionate unit costs.

U. S. GOVERNMENT PRINTING OFFICE 205676

UNITED STATES
DEPARTMENT OF THE INTERIOR
DEFENSE MINERALS EXPLORATION ADMINISTRATION
WASHINGTON 25, D. C.

224 New Customhouse
Denver 2, Colorado

May 29, 1953.

Memorandum

To: T. A. Christensen

From: Executive Officer, DMEA Field Team, Region IV

Subject: DMEA Docket 2296, Contract Idm-E278 (Tungsten), Smith and Rugg (Rambler Mine), Boulder County, Colorado. Operator's Monthly Progress Report for the period April 1953.

Enclosed are the original and four copies of Form MF-104 and Form MF-104A, Narrative Report, and Engineer's Report for the above period.

Work has been accomplished as authorized in the contract and payment is recommended for 75 percent of the amount as reported on Form MF-104, contingent on your verification of the correctness of applicable rates and arithmetical accuracy of computations, except for the following deductions.

Remarks:

Date of Report	May 14, 1953.
Date Received in Field Office	May 15, 1953.
Date Received in Region Office	May 27, 1953.
Date Processed for Payment	May 28, 1953.

W. H. King
W. H. King

Enclosures

RDB:cwm

cc: Contract
WMTraver
Secretary to the Oper. Comm. (2)
Chron.

UNITED STATES
DEPARTMENT OF THE INTERIOR
BUREAU OF MINES

Region IV

Building 20, Room 137
Denver Federal Center
Denver 14, Colorado
May 25, 1953

Memorandum

To: Executive Officer, Field Team, Region IV

From: Chief, Mineral Resources Branch, Mining Division, Region IV

Subject: DMEA 2296, Contract Idm-E278 (Tungsten), Smith and Rugg (Rambler mine), Boulder County, Colorado - Progress report for April 1953

Submitted herewith are the original and four copies of the subject progress report--forms MF-104 and MF-104A, with narrative and required documentation--and the original and six copies of R. L. Bolmer's memorandum covering inspection of the underground progress for the current month and for November 1952 and accounts for the month of April 1953.

Both monthly narratives by the operator report correctly the underground progress, and confirming entries on the reporting forms are verified. Bolmer adequately describes developments in the mine and took two samples of vein exposures in the drift and one raise sample during his inspection. The accounts are in order, properly documented, and conform with terms of the contract and amendments.

Payment is approved and certified on the MF-104 form of $328.48, or 75 percent of the total $437.98 claimed by the contractor, subject to usual Region IV audit.

W. M. Traver

W. M. Traver

enclosures

WMT/amh

cc: 4
E278
DMEA Chron.

UNITED STATES
DEPARTMENT OF THE INTERIOR
BUREAU OF MINES

Region IV

Building 20, Room 137
Denver Federal Center
Denver 14, Colorado
May 25, 1953

Memorandum

To: Chief, Mineral Resources Branch, Mining Division, Region IV

From: R. L. Bolmer

Subject: IMEA 2296, Contract Idm-E278 (Tungsten), Smith and Rugg (Rambler mine), Boulder County, Colorado - Progress report for April 1953

Operations under the subject contract, recessed since November 30, 1952, because of winter weather conditions, were resumed April 16, 1953. The progress during April reported in the operators' narrative--unwatering, clean-up, and 8 feet of advance in 209 drift--was confirmed during my inspection of the property on May 19, 1953. Progress reported under the contract during November, not inspected at that time because of the shutdown, also was confirmed. The operators' November narrative correctly reports the advance and the conditions encountered.

Crosscut 204 (see map with operators' report for November 1952), driven from near the breast of 201 drift, intersected at about 50 feet a parallel vein striking S. 47°-60° W. and dipping 66° northwest. At the intersection, the vein consists of 1 foot of quartz in granite and contains a 3-inch streak of high-grade ferberite. The vein as exposed for 10 feet to the northeast (210 drift) widens to 18 inches, but the mineral decreases to about 1/2 inch.

On the date of inspection, the vein had been opened for about 50 feet southwest of the crosscut (209 drift). The mineral decreases in width but is continuous to 23 feet southwest of the crosscut. In this distance, the vein narrows to 6 inches. From 23 to 39 feet, the vein is barren of mineral; from 39 to 44 feet, up to 1 inch of mineral again is exposed; from 44 feet to the present breast, the vein narrows to 3 inches and again is barren. Two samples were taken of the vein and the mineral streak at the junction of 204 crosscut and 209-10 drifts.

During November, raise 208A was reported driven to a height of 12.5 feet on a small ore showing. The top of this raise, measured during the inspection as 14 feet above the back of 208 drift, contained up to 2.5 inches of ferberite over a length of 8 feet. The mineral on the vein appears to be lengthening with height above the drift and raking northeast toward an area unexplored on the 92-foot level. A third sample was taken of the mineral streak exposed in the raise.

Including the operators, four men are employed for exploration work at the mine. Each of the operators spends about half-time on the project. The other half of each operator's time is spent at their mill in Nederland.

Ore removed from 208A raise and from 209-10 drifts has been milled by the operators. To date, approximately 390 pounds of concentrates (60 percent WO_3) were recovered from the raise and approximately 350 pounds of concentrates (55 percent WO_3) were recovered from the drifts. The concentrates are being held separately and probably will be sold to the Government's stockpile when the minimum quantity of 1 ton has been accumulated.

The operators' monthly report and supporting documents have been reviewed and appear to be in order. The supply and service charges incurred this period are considered necessary and do not appear excessive. The costs incurred are supported by the required documentation and are shown distributed correctly on forms MF-104 and MF-104A. The total amount claimed by the operators, $437.98, is approved. Under this contract, Government participation in the approved costs is 75 percent, or $328.48.

R. L. Bolmer

R. L. Bolmer
Mining Engineer

RLB/amh

cc: 6
E278
DMEA Charon.

SMITH & RUGG
RAMBLER MINE
Idm - E 278
CONTRACT DMEA-2296
April, 1953

NARATIVE REPORT.

1. Operations resumed- April 16, 1953
   Un-Watering started April 16th and completed April 21st by one man tending pump daily.
2. Cleanup of coves started April 22nd and completed April 25th, one man underground and one man on surface.
3. 209 Drift- Drifting started South west and advanced 8ft to point 15.5ft. from center of 204 cross-cut. Small ore in four inches of good quartz being followed. One man underground and one on surface.
4. Refer to Nov. 1952 Map.-Map this month thought to be unnecessary because of small advance.

SMITH & RUGG

By Joseph M Smith
Joseph M. Smith

SMITH and RUGG
DMEA - 2296
CONTRACT - Idm E 278

EXPENSE SUMMARY - APRIL 1953

PAYEE	CK NO.	TOTAL AMOUNT	(2) LABOR & SUPERVISION Labor	Superv.	(3) OPERATING SUPPLIES Description	Amt.	(4) OPERATING EQUIPMENT Description	Depr.	MISCELLANEOUS Item	Amt.
Payroll - per summary attached		$330.00	$154.00	$176.00						
Wilkins and Schone	138	26.25							Book-keeping	$26.25
Jim Pearce Drill Shop	493	51.73			Repairs	$51.73				
State Compensation Insurance Fund	143	10.00							W/Comp. Ins.	10.00
Depreciation of Operators Equipment per contract (½ month)		20.00					Compressor Jack Hammer Dump Truck	$12.50 2.50 5.00		
TOTALS		$437.98	$154.00	$176.00		$51.73		$20.00		$36.25

SMITH and RUGG
DMEA - 2296
CONTRACT Idm E 278

PAYROLL SUMMARY APRIL - 1953

	Period 16	17	18	19	20	21	22	23	24	25	26	27	28	29	30	TOTAL HOURS Reg.	TOTAL HOURS O.T.	RATES Reg.	RATES O.T.	GROSS	S.S.	W.H.T.	NET PAID
Rugg, Charles R. 521-14-9903 Miner	8		8		8		8	8	8	8		8	8	8	8	88		$1.75		$154.00			$154.00
Smith, Joseph M. 522-07-9589 Supervisor		8		8		8	8	8	8	8		8	8	8	8	88		2.00		176.00			176.00
																TOTAL LABOR				$330.00			$330.00

Certified to be a true summary

of subject payroll for April, 1953

A W Schone

Form MF-104 (Rev.)
(April 1952)

DEPARTMENT OF THE INTERIOR
Budget Bureau No. 42-R1036.3.
Defense Minerals Exploration Administration
Approval expires 6-30-53

RECEIVED
JAN 12 1953

UNITED STATES
DEPARTMENT OF THE INTERIOR
DEFENSE MINERALS EXPLORATION ADMINISTRATION
OPERATOR'S MONTHLY REPORT AND VOUCHER

Month of November 1952 Docket No. DMEA 2296 Contract No. E-278
Operator's Name Smith & Rugg Minerals Tungsten
Address P.O. Box 354 - Nederland, Colo.
Contract Amount, $ 24,400.00 Government Participation: 75 % Amount, $ 18,300.00

ITEMS OF COSTS	FOR OPERATOR'S USE: Monthly Total	Totals Previously Reported	Totals To Date	FOR GOVERNMENT USE ONLY: Approved Monthly Total	Approved Totals Previously Reported	Approved Totals To Date
(1) Independent Short Form Contracts:						
Drilling						
Bulldozing						
Crosscutting						
Drifting						
(2) Labor and Supervision:						
Labor	655.20	4,559.70	5,214.90			
Supervision	344.00	2,840.00	3,184.00			
Technical Services						
(3) Operating Mat'ls. and Supplies:						
Timber		56.33	56.33			
Explosives	305.24	1,067.68	1,372.92			
Pipe		174.17	174.17			
Track		71.37	71.37			
Miscellaneous	248.70	1,612.07	1,860.77			
(4) Operating Equipment:						
Rental	100.00	725.00	825.00			
Purchase		198.90	198.90			
Depreciation	40.00	270.00	310.00			
(5) Initial Rehabilitation and Repairs		37.64	37.64			
(6) New Bldgs., Improvements, etc.						
(7) Miscellaneous:						
Repairs to Equipment	73.90	110.26	184.16			
Sampling and Analysis		4.00	4.00			
Payroll Taxes	5.58	30.17	35.75			
Liability Insurance	24.00	342.00	366.00			
Bookkeeping	41.00	300.00	341.00			
Hauling Equip	12.88		12.88			
(8) Contingencies (specify):						
TOTALS	$1,850.50	$12,399.29	$14,249.79	1850.50	12,399.29	14,249.79

I certify that the above bill is correct and just and that payment therefor has not been received.
Date 12-12-52 *Payee Smith & Rugg
Per Joseph M Smith Title Partner

*When a voucher is signed or receipted in the name of a company or corporation, the name of the person writing the company or corporate name, as well as the capacity in which he signs, must appear. For example: "John Doe Company, per John Smith, Secretary," or "Treasurer," as the case may be.

→ NOTE.—Title 18, U. S. Code (Crimes), section 1001, makes it a criminal offense to make a willfully false statement or representation to any department or agency of the United States as to any matter within its jurisdiction.

(Instructions on reverse)

Pursuant to authority vested in me, I certify that this account is correct and proper for payment in the amount of:

$ 1387.87

Signature Alfred K. Olson (Authorized Certifying Officer)

Date 12-30-52 Vou. No. 53-76
(See other side)

(For Government use only)

CERTIFICATION BY GOVERNMENT REPRESENTATIVE:

I certify that to the best of my knowledge and belief the contractor submitting this voucher is operating a Defense Minerals Exploration Administration project under Contract No. E-278 in accordance with the terms of the contract.

Signature R. L. Palmer, #138787 WMT Title Mining Engineer Date Dec. 15, 1952

APPROVAL BY DMEA EXECUTIVE OFFICER OR ALTERNATE: R.D.B.

Signature W. H. King Title Executive Officer Date 12/22/52

MONTHLY REPORT OF OPERATOR

The Operator (Contractor) of an exploration project is required to make a monthly report to the Government through the Regional Executive Officer. This report consists of three parts as follows:

(*a*) *Form MF–104—Operator's Monthly Report and Voucher.*—This form details expenditures and constitutes a voucher for reimbursing the Operator for the Government's share of costs;

(*b*) *Form MF–104A—Operator's Unit Cost and Progress Report.*—This is a statistical report of expenditures which shows costs for the various types of operation; and

(*c*) *Narrative.*—A concise narrative description of progress made, results accomplished, and any unusual difficulties encountered must be furnished as an attachment to this Report and Voucher. Wherever possible, the narrative is to be illustrated with maps or sketches showing formations penetrated and location and assays of samples taken as well as advances in workings. In the case of diamond drilling or churn drilling, the location and inclination of holes is to be shown on a map; logs and assays also are to be submitted.

The Monthly Report of Operator should be prepared in an original and four copies all of which must be sent to the Executive Officer of the Region not later than the 15th of the month following.

Preparation of Form MF–104—Operator's Monthly Report and Voucher.—All the applicable spaces in Form MF–104 should be filled in by the Operator, and the Operator or his agent should sign the certification in the lower left corner of the form.

The items of costs are arranged in the order they appear in Article 6 (a) of Form MF–200 (Revised February 1952), however, this form is readily adaptable for use in reporting activities under other contract forms.

Under Item (1) delete words "Short Form" if the contract is a sub-contract under Form MF–200; and delete word "Independent" if the contract reported is on Form MF–200 (A). Also, report work paid for on a unit basis under contract Form MF–200 as though it were performed under an independent contract.

Under Item (2) include labor, supervision and technical services incurred for the exploratory operations. Do not include labor, supervision and technical services used for work performed under items (5) and (6).

Under Item (3) include the costs of material and supplies used in the project other than that used under items (5) and (6).

Under Item (4) appear the three types of operating equipment expenditures, that is, rental, purchase and depreciation. The expenditures made for renting equipment belonging to a third party will be reported under "Rental". The amount paid or duly obligated for payment for the purchase of equipment will be reported under "Purchase". The amount of expenditures due the Operator to reimburse him for depreciation of equipment owned will be reported under "Depreciation".

Item (5) comprises costs of labor, supervision, technical services, materials, etc., which are used in the initial rehabilitation and repair of existing buildings, installations, fixtures, and equipment. These costs, therefore, should not be reported under items (2) and (3).

Item (6) includes the labor, supervision, technical services, materials, etc., used in the installation or construction of new buildings, fixed improvements, etc., necessary for the project. These costs, therefore, should not be reported under items (2) and (3).

Item (7) covers miscellaneous types of expenditure such as payroll taxes, liability insurance, workmen's compensation insurance, repairs to equipment and sampling and analysis. Only that part of payroll taxes, liability insurance and workmen's compensation which are paid by the operator should be reported under item (7). The share paid by the employee as a payroll deduction is to be included under item (2) as labor costs.

Item (8) includes any unforeseen costs not included in the other seven categories.

The original of Form MF–104 when submitted for reimbursable expenses incurred under contract Form MF–200 must be supported by original documentation or by certified copies of purchase orders, payrolls or transcripts of payrolls, unless such documentation has been waived by the Regional Executive Officer. This certification may be stated thus, "Certified True Copy (or Transcript)", followed by appropriate signature. If the Executive Officer of the Region determines that a contract under Form MF–200 should have an "on-site" audit, that is, a Government auditor should make an audit of the Operator's books and records of account, the Operator need not support his monthly voucher with original or certified documents except in cases of equipment purchases whose individual costs exceed $50.00. In these cases the original or a certified copy of the purchase order or invoice should be attached to the Monthly Voucher. N. B.—Only the *original* of Form MF–104 is required to be documented. The four copies of Form MF–104 are not to be thus supported.

Form MF–104 submitted for reimbursement under fixed price contracts on Form MF–200 (A), however, are not required to be supported by documentation of any kind. The Operator will submit his claim under item (1) of Form MF–104 by deleting as stated above the word "Independent" and by showing the number of feet or other units immediately after the appropriate descriptive word, such as, drilling, bulldozing, crosscutting, drifting, etc., and giving the "Monthly Total" amount due. "Totals Previously Reported", and "Totals to Date" columns should also be filled in.

GPO 83-38476

Form MF-104A
(April 1952)

Budget Bureau No. 42-R1151
Approval expires 6-30-53.

UNITED STATES
DEPARTMENT OF THE INTERIOR

DEPARTMENT OF THE INTERIOR
Defense Minerals Administration
RECEIVED
JAN 12 1953

DEFENSE MINERALS EXPLORATION ADMINISTRATION

OPERATOR'S UNIT COST AND PROGRESS REPORT

Month of November 1952 Docket No. DMEA 2296 Contract No. E-278
Operator's Name Smith & Rugg Minerals Tungsten
Address P. O. Box 354 - Nederland, Colo.

OPERATION	UNIT	COSTS THIS MONTH	UNITS THIS MONTH	COSTS TO DATE	UNITS TO DATE	UNIT COSTS TO DATE	AUTHORIZED BY CONTRACT Units	AUTHORIZED BY CONTRACT Unit Costs
Drifting	feet	$375.65	12.5	$6,160.47	314.0	19.62	515	
Crosscutting	feet	880.84	32.5	2,619.15	110.0	23.81	125	
Raising	feet	540.35	12.5	1,476.18	53.5	27.59	50	
Shafts	feet			2,785.94	35.0	79.60	60	
Winzes								
Drilling: Core								
Churn								
Auger								
Stripping								
Trenching								
Test Pits								
Roads and Trails								
Rehabilitation-Underground				917.85	512.5		750	
TOTAL DISTRIBUTED COSTS		1,796.84	57.5	13,959.59				TOTAL COSTS AUTHORIZED BY CONTRACT
Operating Equipment Purchased				198.90				$305.00
Initial Rehabilitation and Repairs		53.66		91.30				250.00
New Buildings, Improvements, etc.								
TOTAL COSTS		1,850.50		14,249.79				$24,400.00

The undersigned company, and the official executing this certification on its behalf, hereby certify that the information contained in this report is correct and complete to the best of their knowledge and belief.

Date 12-12-52 Operator Smith & Rugg
Per Joseph M Smith Title Partner

NOTE.—Title 18, U. S. Code (Crimes), section 1001, makes it a criminal offense to make a willfully false statement or representation to any department or agency of the United States as to any matter within its jurisdiction.

(Instructions on reverse)

REMARKS Operating costs for Nov. allocated on basis of labor cost for each operation during November, as follows:

	Labor	Percentage
Drifting	$202.60	20.3
Crosscutting	475.60	47.6
Raising	291.80	29.2
Repairing House & Head Frame	29.20	2.9
	$999.20	100.0

(For Government use only)

INSTRUCTIONS

Preparation of Form MF-104A—Operator's Unit Cost and Progress Report.—Applicable places on Form 104A should be filled in by the Operator. The purpose of this form is twofold as follows: (1) to furnish the supervising engineers and other administrators with statistical information necessary to better determine the progress of the project; and (2) to furnish more permanent information on mining costs for future use. The more important phases of operation on which permanent information is desired have been outlined in the form. There are blank lines, however, for those unusual phases which may need to be reported for a particular project. It will be necessary for the Operator to distribute his costs among the applicable phases reported with the exception of three items the costs of which are not to be distributed by the Operator. These three items are: "Operating Equipment Purchased", "Initial Rehabilitation and Repairs", and "New Buildings, Improvements, etc." The reason for not distributing these items on a monthly basis is doubtless clear to the Operator, since such distribution might well overstate the cost for any one month or period short of the entire contract period.

Form MF-104A has been designed to tie in with Form MF-104 for both monthly and cumulative costs. The "Total Costs" on Form MF-104A for each month should equal the monthly "Total Costs" as reported on Form MF-104. This is also true of the "Total Costs To Date".

In preparing Form MF-104A, it will be necessary frequently to distribute certain costs over a number of items. For instance, supervisory and engineering costs may have to be distributed over several phases, such as, drifting, crosscutting, raising, etc., provided that these items were reported active for the month. Such distributions should be made on the basis of time spent on the various phases, on man days of labor charged to such phases, or on some other equitable basis. "Operating Equipment", "Initial Rehabilitation and Repairs", and "New Buildings Improvements, etc.", will be distributed to the several phases of the project by the Washington Office of DMEA at the close of the project if determined necessary. The last two columns headed "Authorized by Contract" will be filled in by the Operator if such information is found in the contract. This information is usually a part of Exhibit "A" of the contract. A space for remarks has been provided for the use of the Operator to call attention to any unusual circumstances causing excessive or disproportionate unit costs.

GPO 83-38475

R. DB

53-76

UNITED STATES
DEPARTMENT OF THE INTERIOR
DEFENSE MINERALS ADMINISTRATION
WASHINGTON 25, D. C.

224 New Customhouse
Denver 2, Colorado

December 22, 1952

Memorandum

To: T. A. Christensen

From: Executive Officer, DMEA Field Team, Region IV

Subject: DMEA Docket 2296, Contract Idm-R278 (Tungsten) Smith and Fugg (Rambler Mine) Boulder County, Colorado - Operator's Monthly Progress Report for the period of November, 1952

Enclosed are the original and four copies of Form MF-104 and Form MF-104A, Narrative Report, and Engineer's Report for the above period.

Operations at the Rambler Mine have been recessed for the winter months and no check of the progress reported for November, 1952 was possible. As a check will be made when operations begin in the spring, we recommend that payment be made for 75 percent of the amount as reported on Form MF-104, contingent on your verification of the correctness of applicable rates and arithmetical accuracy of computations.

Remark:

Date of Report - December 11, 1952
Date received in Colorado Branch Office - December 15, 1952
Date received in Region IV Office - December 18, 1952
Date processed for Payment - December 22, 1952

W. H. King
W. H. King

Enclosure

RDB:oc
cc: Contract
Secretary to the Operating Committee (2)
WMTraver
Chron.
AMKoschmann (2)

Region IV

UNITED STATES
DEPARTMENT OF THE INTERIOR
BUREAU OF MINES

Building 20, Room 137
Denver Federal Center
Denver 14, Colorado
December 16, 1952

Memorandum

To: Executive Officer, Field Team, Region IV

From: Chief, Colorado Branch, Mining Division, Region IV

Subject: DMEA 2296, Contract Idm-E278 (Tungsten), Smith and Rugg (Rambler mine), Boulder County Colorado - Progress report for November 1952

Enclosed please find five copies of the above progress report--forms MF-104 and MF-104A, with proper documentation--and seven copies of R. L. Bolmer's memorandum covering inspection of the accounts.

Authority was given the contractor verbally to recess operations for the winter before an inspection was possible and the underground progress was not checked. However, it is no doubt correct and will be verified when work is resumed. The accounting forms are in order except as noted by Bolmer: $53.66 for "Initial Rehabilitation and Repairs" entered on the MF-104A form but not on the MF-104 form.

Payment of $1,387.87, or 75 percent of the total $1,850.50 claimed by the contractor, is approved subject to verification by your staff and the Audit and Accounts Section of the correctness of applicable rates and arithmetical accuracy.

W. M. Traver Jr.

W. M. Traver, Jr.

enclosures

WMT/cb

cc 4
AHKoschmann
E278
DMEA Chron

Region IV

UNITED STATES
DEPARTMENT OF THE INTERIOR
BUREAU OF MINES

Building 20, Room 137
Denver Federal Center
Denver 14, Colorado
December 16, 1952

Memorandum

To: Chief, Colorado Branch, Mining Division, Region IV

From: R. L. Bolmer

Subject: DMEA 2296, Contract Idm-E278 (Tungsten), Smith and Rugg (Rambler mine), Boulder County Colorado - Progress report for November 1952

The progress as reported in the contractor's narrative is accepted as correct and complete. Operations at the Rambler mine have recessed for the winter. Work under the subject contract will be resumed in the spring of 1953. The mine has been allowed to fill with water and is not available for inspection. The progress reported by the contractor conforms with the terms of the contract and has been shown correctly on form MF-104A. The distribution of costs on form MF-104A is allocated on the basis of labor cost for each operation. On this form an amount of $53.66 has been distributed to "Initial Rehabilitation and Repairs". It is noted on the MF-104 form that a similar amount has not been separated from the other costs and distributed under item 5.

The supply and service charges incurred this period are considered necessary and do not appear excessive. The costs incurred are supported by the required documentation and are approved in the amount claimed. Payment of 75 percent of the amount claimed, or $1,387.87, is recommended.

R. L. Bolmer

R. L. Bolmer,
Mining Engineer

RLB/eb

cc 6
AHKoschmann
E278
DMEA Chron

SMITH and RUGG
DMEA -2296
CONTRACT - Idm E-278

EXPENSE SUMMARY - November, 1952

PAYEE	Ck. No.	TOTAL AMOUNT	(2) LABOR & SUPERV. Labor	Superv.	(3) OPERATING SUPPLIES Description	Amt.	(4) OPERATING EQUIPMENT Desc.	Rental	Depr.	(7) MISCELLANEOUS Item	Amount
Payroll-per summary attached		$ 999.20	$655.20	$344.00							
Buda Sales & Service	117	9.94								Repairs	9.94
McFarland Eggus	118	9.65								Repairs	9.65
Industrial Eng. & Supply Co.	129	524.12			Misc. Explosives Explosives	118.88 517.91 212.67	Generator & Pump	100.00			
Buda Sales & Service	130	37.11								Repairs	37.11
Larson Machine Shop	131	17.20								Repairs	17.20
Dick's Corner Service Station	132	31.05			Gas & Oil	31.05					
C & K Oil Company	134	98.77			Fuel Oil	98.77					
Wilkins & Schone	135	41.00								Bookkeeping	41.00
State Comp. Insurance Fund	136	24.00								W/Comp. Ins.	24.00
Hodgson Transfer Co.	137	12.88								Hauling	12.88
Depreciation of Operator's Equip. per contract		40.00					Compressor Jack Hammer Dump Truck	25.00 5.00 10.00			
Payroll Taxes Accrued October, 1952*		.90								Payroll Tax	.90
Payroll Taxes Accrued November, 1952		4.68								Payroll Tax	4.68
TOTALS.		$1,850.50	$655.20	$344.00		$553.94		$100.00	$40.00		$157.36

* Not included in October report.

SMITH and RUGG
DMEA - 2296
CONTRACT - Idm E-278

PAYROLL SUMMARY - November, 1952

	Period	1	2	3	4	5	6	7	8	9	10	11	12	13	14	15	HOURS		RATE		GROSS	S. S.	W.H.	NET
	1st																							
	2nd	16	17	18	19	20	21	22	23	24	25	26	27	28	29	30	Reg.	OT	Reg.	OT	WAGES	Tax	Tax	PAID
Rugg, Charles R.	1st	8*		8	8		8	8	8		8	8	8	8	8	8*	80	16	$1.65	$2.475	$171.60			$171.60
521-14-9903 Miner	2nd		8	8	8	8	8	8*		8	8	8	8	8	8*		80	16	1.65	2.475	171.60			171.60
Smith, Michael B. 523-40-7790 Hoistman	2nd													8	8		16		1.50		24.00	.36	$4.20	19.44
Jorgensen, Christian 522-01-4021	1st												8	8	8		24		1.50		36.00	.54	6.30	29.16
Miner	2nd		8														8		1.50		12.00	.18	2.10	9.72
Vega, Gabriel C. 526-03-6634	1st												8	8	8		24		1.50		36.00	.54	5.10	30.36
Miner & Hoistman	2nd		8	8	8	8	8	8*		8	8	8	8	8	8*		80	16	1.50	2.25	156.00	2.34	20.50	133.16
Langley, John R. 522-28-9447 Hoistman	2nd			8	8	8	8										32		1.50		48.00	.72	6.80	40.48
Smith, Joseph M. 522-07-9589	1st	8*		8	8		8	8	8		8	8	8	8	8	8*	80	16	2.00	3.00	208.00			208.00
Supervisor	2nd		8					8		8	8	8	8	8	8*		56	8	2.00	3.00	136.00			136.00
													TOTALS.								$999.20	$4.68	$45.00	$949.52

* Overtime

Certified to be a true summary of
subject payroll for November, 1952

A.W. Schone

Rambler Mine
Contract Idm E-278
DMEA - 2296
November, 1952

NARRATIVE REPORT

1. 204-Crosscut - Driving resumed at 20 ft from center of 201 Drift and advanced to 52.5 feet where vein was cut showing about two inches of ferberite. Advance 32.5 feet.

2. 209-Drift - Drift started south-west along vein encountered in 204 crosscut and advanced to 7.5' from center of 204 crosscut. Ore pinched to small seam. Advance 5 feet.

3. 210-Drift - Drift started north-east along vein encountered in 204 crosscut and advanced to 10 feet from center of 204 crosscut. Vein getting wider and ferberite scattered through vein in several small streaks. Advance 7.5 feet.

4. 208-A-Raise - Raise started on small ore body encountered in 208 Drift, and advanced to 19.5 ft above track. Vein is wider in back of raise and shows considerable more ore. Ore body is raking sharply to north-east and if it continues will miss all workings on upper level. Advance 12.5 feet.
   Total advance- All places 57.5 feet.

5. Operating Crew - Three men working six days weekly most of month.

6. Delays & difficulties - One day was spent repairing head frame. One day and half spent reconditioning compressor and motor. One day and half spent removing old hoist and replacing with another. Progress this month slowed considerably on account of snow and extreme cold weather. Authorization for closing down for winter months has been requested. Work to be resumed on or before April 15, 1953.

7. Unusual Circumstances - None other than those indicated above.

SMITH & RUGG

Joseph M. Smith

Joseph M. Smith

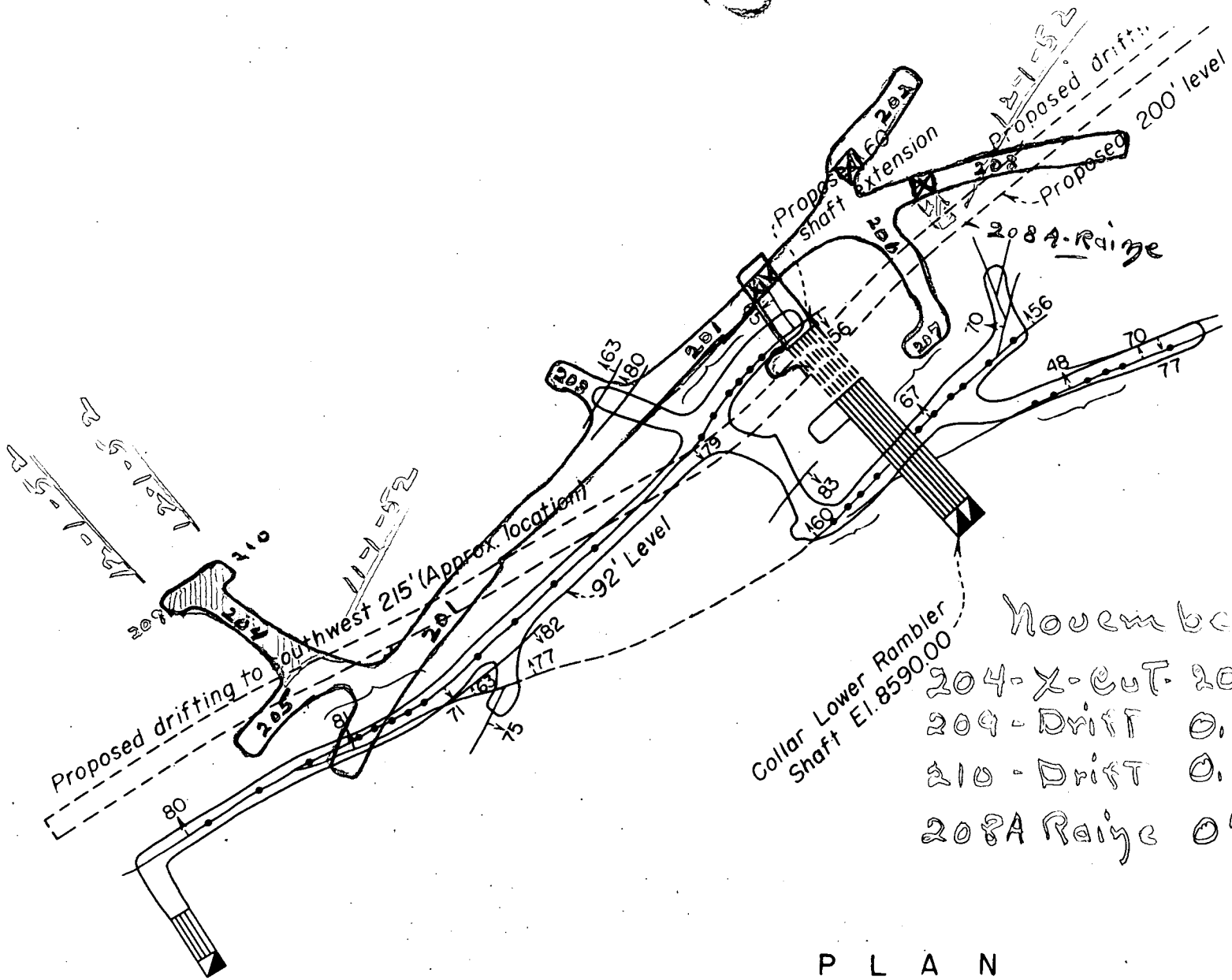

November-1952

204-X-Cut 20.0' To 52.5'

209-Drift 0.' To 7.5'

210-Drift 0.' To 10.0'

208A Raize 0' To 19.5'

PLAN

(SHOWING PRESENT WORKINGS & PROPOSED EXPLORATION)

30 0 30 60 90

SCALE OF FEET

Form MF-104 (Rev.)
(April 1952)

Budget Bureau No. 42-R1036.3.
Approval expires 6-30-53.

PREPARED
CHECKED
TYPE

UNITED STATES
DEPARTMENT OF THE INTERIOR
DEFENSE MINERALS EXPLORATION ADMINISTRATION
OPERATOR'S MONTHLY REPORT AND VOUCHER

Month of October, 1952 Docket No. DMEA 2296 Contract No. E-270
Operator's Name Smith & Ruff Minerals Tungsten
Address P. O. Box 354 Nederland, Colo.
Contract Amount, $ 24,400.00 Government Participation: 75% Amount, $ 18,300.00

ITEMS OF COSTS	FOR OPERATOR'S USE: Monthly Total	Totals Previously Reported	Totals To Date	FOR GOVERNMENT USE ONLY: Approved Monthly Total	Approved Totals Previously Reported	Approved Totals To Date
(1) Independent / Short Form Contracts:						
Drilling						
Bulldozing						
Crosscutting						
Drifting						
(2) Labor and Supervision:						
Labor	423.00	4,136.30	4,559.30			
Supervision	440.00	2,400.00	2,840.00			
Technical Services						
(3) Operating Mat'ls. and Supplies:						
Timber		56.33	56.33			
Explosives		1,067.68	1,067.68			
Pipe		174.17	174.17			
Track		71.37	71.37			
Miscellaneous	139.75	1,473.32	1,612.07			
(4) Operating Equipment:						
Rental	100.00	625.00	725.00			
Purchase		198.90	198.90			
Depreciation	40.00	230.00	270.00			
(5) Initial Rehabilitation and Repairs		37.64	37.64			
(6) New Bldgs., Improvements, etc.						
(7) Miscellaneous:						
Repairs to Equipment		110.26	110.26			
Sampling and Analysis		4.00	4.00			
Payroll Taxes		30.17	30.17			
Liability Insurance	17.00	325.00	342.00			
Workmen's Comp	50.00	250.00	300.00			
(8) Contingencies (specify):						
TOTALS	1,208.75	11,190.54	12,399.29	1208.75	11,190.54	12,399.29

I certify that the above bill is correct and just and that payment therefor has not been received.

Date Oct. 12, 1952 Payee Smith & Ruff

Per Joseph M. Smith Title Partner

*When a voucher is signed or receipted in the name of a company or corporation, the name of the person writing the company or corporate name, as well as the capacity in which he signs, must appear. For example, "John Doe Company, per John Smith, Secretary," or "Treasurer," as the case may be.

→ NOTE.—Title 18, U. S. Code (Crimes), section 1001, makes it a criminal offense to make a willfully false statement or representation to any department or agency of the United States as to any matter within its jurisdiction.

(Instructions on reverse)

Pursuant to authority vested in me, I certify that this account is correct and proper for payment in the amount of:

$ 906.56

Signature
(Authorized Certifying Officer)

Date 12/1/52 Voucher No. DMA 53-65
(See other side)

DEC 12 1952

(For Government use only)

CERTIFICATION BY GOVERNMENT REPRESENTATIVE:

I certify that to the best of my knowledge and belief the contractor submitting this voucher is operating a Defense Minerals Exploration Administration project under Contract No. E-278 in accordance with the terms of the contract.

Signature R. L. Bolmer $906.56 Title Mining Engineer Date Nov. 18, 1952

APPROVAL BY DMEA EXECUTIVE OFFICER OR ALTERNATE:

Signature W. H. Kerig Title Executive Officer Date 11/24/52

MONTHLY REPORT OF OPERATOR

The Operator (Contractor) of an exploration project is required to make a monthly report to the Government through the Regional Executive Officer. This report consists of three parts as follows:

(a) *Form MF-104—Operator's Monthly Report and Voucher.*—This form details expenditures and constitutes a voucher for reimbursing the Operator for the Government's share of costs;

(b) *Form MF-104A—Operator's Unit Cost and Progress Report.*—This is a statistical report of expenditures which shows costs for the various types of operation; and

(c) *Narrative.*—A concise narrative description of progress made, results accomplished, and any unusual difficulties encountered must be furnished as an attachment to this Report and Voucher. Wherever possible, the narrative is to be illustrated with maps or sketches showing formations penetrated and location and assays of samples taken as well as advances in workings. In the case of diamond drilling or churn drilling, the location and inclination of holes is to be shown on a map; logs and assays also are to be submitted.

The Monthly Report of Operator should be prepared in an original and four copies all of which must be sent to the Executive Officer of the Region not later than the 15th of the month following.

Preparation of Form MF-104—Operator's Monthly Report and Voucher.—All the applicable spaces in Form MF-104 should be filled in by the Operator, and the Operator or his agent should sign the certification in the lower left corner of the form.

The items of costs are arranged in the order they appear in Article 6 (a) of Form MF-200 (Revised February 1952), however, this form is readily adaptable for use in reporting activities under other contract forms.

Under Item (1) delete words "Short Form" if the contract is a sub-contract under Form MF-200; and delete word "Independent" if the contract reported is on Form MF-200 (A). Also, report work paid for on a unit basis under contract Form MF-200 as though it were performed under an independent contract.

Under Item (2) include labor, supervision and technical services incurred for the exploratory operations. Do not include labor, supervision and technical services used for work performed under items (5) and (6).

Under Item (3) include the costs of material and supplies used in the project other than that used under items (5) and (6).

Under Item (4) appear the three types of operating equipment expenditures, that is, rental, purchase and depreciation. The expenditures made for renting equipment belonging to a third party will be reported under "Rental". The amount paid or duly obligated for payment for the purchase of equipment will be reported under "Purchase". The amount of expenditures due the Operator to reimburse him for depreciation of equipment owned will be reported under "Depreciation".

Item (5) comprises costs of labor, supervision, technical services, materials, etc., which are used in the initial rehabilitation and repair of existing buildings, installations, fixtures, and equipment. These costs, therefore, should not be reported under items (2) and (3).

Item (6) includes the labor, supervision, technical services, materials, etc., used in the installation or construction of new buildings, fixed improvements, etc., necessary for the project. These costs, therefore, should not be reported under items (2) and (3).

Item (7) covers miscellaneous types of expenditure such as payroll taxes, liability insurance, workmen's compensation insurance, repairs to equipment and sampling and analysis. Only that part of payroll taxes, liability insurance and workmen's compensation which are paid by the operator should be reported under item (7). The share paid by the employee as a payroll deduction is to be included under item (2) as labor costs.

Item (8) includes any unforeseen costs not included in the other seven categories.

The original of Form MF-104 when submitted for reimbursable expenses incurred under contract Form MF-200 must be supported by original documentation or by certified copies of purchase orders, payrolls or transcripts of payrolls, unless such documentation has been waived by the Regional Executive Officer. This certification may be stated thus, "Certified True Copy (or Transcript)", followed by appropriate signature. If the Executive Officer of the Region determines that a contract under Form MF-200 should have an "on-site" audit, that is, a Government auditor should make an audit of the Operator's books and records of account, the Operator need not support his monthly voucher with original or certified documents except in cases of equipment purchases whose individual costs exceed $50.00. In these cases the original or a certified copy of the purchase order or invoice should be attached to the Monthly Voucher. N. B.—Only the *original* of Form MF-104 is required to be documented. The four copies of Form MF-104 are not to be thus supported.

Form MF-104 submitted for reimbursement under fixed price contracts on Form MF-200 (A), however, are not required to be supported by documentation of any kind. The Operator will submit his claim under item (1) of Form MF-104 by deleting as stated above the word "Independent" and by showing the number of feet or other units immediately after the appropriate descriptive word, such as, drilling, bulldozing, crosscutting, drifting, etc., and giving the "Monthly Total" amount due. "Totals Previously Reported", and "Totals to Date" columns should also be filled in.

U. S. GOVERNMENT PRINTING OFFICE 205675

Form MF-104A
(April 1952)

Budget Bureau No. 42-R1151
Approval expires 6-30-53.

UNITED STATES
DEPARTMENT OF THE INTERIOR
DEFENSE MINERALS EXPLORATION ADMINISTRATION
OPERATOR'S UNIT COST AND PROGRESS REPORT

PREPARED
CHECKED
TYPE

Month of October 1952 Docket No. DMEA 2296 Contract No. I-278
Operator's Name Smith & Ruge Minerals Tungsten
Address P. O. Box 354 Nederland, Colorado

OPERATION	UNIT	COSTS THIS MONTH	UNITS THIS MONTH	COSTS TO DATE	UNITS TO DATE	UNIT COSTS TO DATE	AUTHORIZED BY CONTRACT Units	AUTHORIZED BY CONTRACT Unit Costs
Drifting	feet	1,005.10	64	5,784.82	301.5	19.19	515	
Crosscutting	feet	200.65	12	1,7[illegible].31	77.5	22.43	125	
Raising	feet			935.83	41.0	22.83	55	
Shafts	feet			2,785.94	35.0	79.60	65	
Winzes								
Drilling: Core								
Churn								
Auger								
Stripping								
Trenching								
Test Pits								
Roads and Trails								
Underground Rehabilitation				917.35				
					455.0		750	
TOTAL DISTRIBUTED COSTS		1,205.75	76	12,162.75				TOTAL COSTS AUTHORIZED BY CONTRACT
Operating Equipment Purchased				198.50				305.00
Initial Rehabilitation and Repairs				37.64				250.00
New Buildings, Improvements, etc.								
TOTAL COSTS		1,205.75		12,399.29				24,000.00

The undersigned company, and the official executing this certification on its behalf, hereby certify that the information contained in this report is correct and complete to the best of their knowledge and belief.

Date Oct. 12, 1952 Operator Smith & Ruge

Per Joseph M. Smith Title Partner

REMARKS: Operating costs allocated on basis of labor costs for each operation during the current month, as follows:

	Labor	Percent
Drifting	$719.00	16.6
Crosscutting	143.00	83.4
	861.00	100.0%

NOTE.—Title 18, U. S. Code (Crimes), section 1001, makes it a criminal offense to make a willfully false statement or representation to any department or agency of the United States as to any matter within its jurisdiction.

(Instructions on reverse)

(For Government use only)

DEPARTMENT OF THE INTERIOR
Defense Minerals Administration
RECEIVED
DEC 12 1952

INSTRUCTIONS

Preparation of Form MF-104A—Operator's Unit Cost and Progress Report.—Applicable places on Form 104A should be filled in by the Operator. The purpose of this form is twofold as follows: (1) to furnish the supervising engineers and other administrators with statistical information necessary to better determine the progress of the project; and (2) to furnish more permanent information on mining costs for future use. The more important phases of operation on which permanent information is desired have been outlined in the form. There are blank lines, however, for those unusual phases which may need to be reported for a particular project. It will be necessary for the Operator to distribute his costs among the applicable phases reported with the exception of three items the costs of which are not to be distributed by the Operator. These three items are: "Operating Equipment Purchased", "Initial Rehabilitation and Repairs", and "New Buildings, Improvements, etc." The reason for not distributing these items on a monthly basis is doubtless clear to the Operator, since such distribution might well overstate the cost for any one month or period short of the entire contract period.

Form MF-104A has been designed to tie in with Form MF-104 for both monthly and cumulative costs. The "Total Costs" on Form MF-104A for each month should equal the monthly "Total Costs" as reported on Form MF-104. This is also true of the "Total Costs To Date".

In preparing Form MF-104A, it will be necessary frequently to distribute certain costs over a number of items. For instance, supervisory and engineering costs may have to be distributed over several phases, such as, drifting, crosscutting, raising, etc., provided that these items were reported active for the month. Such distributions should be made on the basis of time spent on the various phases, on man days of labor charged to such phases, or on some other equitable basis. "Operating Equipment", "Initial Rehabilitation and Repairs", and "New Buildings Improvements, etc.", will be distributed to the several phases of the project by the Washington Office of DMEA at the close of the project if determined necessary. The last two columns headed "Authorized by Contract" will be filled in by the Operator if such information is found in the contract. This information is usually a part of Exhibit "A" of the contract. A space for remarks has been provided for the use of the Operator to call attention to any unusual circumstances causing excessive or disproportionate unit costs.

GPO 83-38475

UNITED STATES
DEPARTMENT OF THE INTERIOR
DEFENSE MINERALS ADMINISTRATION
WASHINGTON 25, D. C.

224 New Customhouse
Denver 2, Colorado

November 21, 1952

Memorandum

To: T. A. Christensen

From: Executive Officer, DMEA Field Team, Region IV

Subject: DMEA Docket 2296, Contract I4m-R278 (Tungsten) Joseph M. Smith and Charles R. Rugg, Boulder County, Colorado - Operator's Monthly Progress Report for the period of October, 1952

Enclosed are the original and four copies of Form MF-104 and Form MF-104A, Narrative Report, and Engineer's Report for the above period.

Work has been accomplished as authorized in the contract and payment is recommended for 75 percent of the amount as reported on Form MF-104, contingent on your verification of the correctness of applicable rates and arithmetical accuracy of computations.

W. H. King
John F. Shaw for
W. H. King

Enclosures

JWT:oc

cc: Contract
Secretary to the Operating Committee (2)
WMTraver
Chron.
AHKoschmann (2)

UNITED STATES
DEPARTMENT OF THE INTERIOR
BUREAU OF MINES

Region IV

Building 20, Room 137
Denver Federal Center
Denver 14, Colorado
November 19, 1952

Memorandum

To: Executive Officer, Field Team, Region IV

From: Chief, Colorado Branch, Mining Division, Region IV

Subject: DMEA 2296, Contract Idm-E278 (Tungsten), Smith and Rugg (Rambler mine), Boulder County, Colorado - Progress report for October 1952

Enclosed please find five copies of the above progress report--forms MF-104 and MF-104A, with proper documentation--and seven copies of R. L. Bolmer's memorandum covering inspection of the underground progress and accounts.

Underground progress is reported correctly in the narrative and the accounting is in order.

Payment is approved of $906.56, or 75 percent of the total $1,208.75 claimed by the contractor, subject to Region IV audit.

W. M. Traver, Jr.

W. M. Traver, Jr.

enclosures

WMT/cb

cc 4
AHKoschmann
E278
DMEA Chron.

UNITED STATES
DEPARTMENT OF THE INTERIOR
BUREAU OF MINES

Region IV

Building 20, Room 137
Denver Federal Center
Denver 14, Colorado
November 19, 1952

Memorandum

To: Chief, Colorado Branch, Mining Division, Region IV

From: R. L. Bolmer

Subject: DMEA 2296, Contract Idm-E278 (Tungsten), Smith and Rugg (Rambler mine), Boulder County, Colorado - Progress report for October 1952

Progress under the subject contract was inspected November 4, 1952, with Ogden Tweto, U. S. Geological Survey, and Messrs. Smith and Rugg. The progress as reported in Smith's narrative is correct and complete. The work performed this period conforms to the terms of the contract and has been shown correctly on form MF-104A.

The costs claimed and shown on form MF-104 this period are substantiated by the required documentation and are approved.

It is noted that the operators have attached a statement from the State Compensation Insurance Fund giving the premium rates for Workmen's Compensation and Occupational Disease Insurance. It is suggested that a copy of this statement be made for the project files.

Project costs this period are approved in the amount of $1,208.75. Payment of 75 percent of the approved amount, or $906.56, is recommended.

R. L. Bolmer
Mining Engineer

RLB/cb

cc 6 —
AMKoschmann
E278
DMEA Chron.

SMITH and RUGG
DMEA - 2296
CONTRACT - E-278

PREPARED
CHECKED
DATE

EXPENSE SUMMARY - October 1952

PAYEE	CK No	TOTAL AMOUNT	(2) LABOR & SUPERV. Labor	Superv.	(3) OPERATING SUPPLIES Description	Am't	(4) OPERATING EQUIPMENT Description	Rental	Depr.	(7) MISCELLANEOUS Item	Am't
Payroll - Per Summary		$863.00	$423.00	$440.00							
&K Oil Company	112	133.90			Fuel Oil	$133.90					
Industrial Engineering & Supply Co.	113	100.00					Generator & Pump	100.00			
Standard Machine Works	114	4.85			Misc. Sup.	4.85					
Wilkins & Schone	115	50.00								Bookkeeping	50.00
State Comp. Insurance Fund	116	17.00								Insurance	17.00
Depreciation of Operators Equipment per contract		40.00					Compressor		25.00		
							Jack Hammer		5.00		
							Dump Truck		10.00		
TOTALS.....		$1,208.75	$423.00	$440.00		$138.75		$100.00	$40.00		$67.00

SMITH and RUGG
DMEA - 2296
CONTRACT - E 278

PREPARED
CHECKED
TYPE

PAYROLL - October 1952

		1st Period	1	2	3	4	5	6	7	8	9	10	11	12	13	14	15	TOTAL HOURS		RATES		GROSS	Soc.	W.H.	NET
		2nd Period	16	17	18	19	20	21	22	23	24	25	26	27	28	29	30	31	Reg.	O.T.	Reg.	O.T.	WAGES	Sec.	Tax	PAID
Rugg, Charles R. 521-14-9903 Miner		1st	8	8	8	8*		8	8	8	8	8	8*		8	8	8		88	16	1.65	2.475	184.80			184.80
		2nd	8	8	8*			8	8	8	8	8		8	8	8	8	8	96	8	1.65	2.475	178.20			178.20
Smith, Michael B. 523-40-7790 Hoistman		1st				8							8						16		1.50		24.00	0.36	4.20	19.44
		2nd			8					8		8							24		1.50		36.00	0.54	7.30	28.16
Smith, Joseph M. 522-07-9589 Supervisor		1st	8	8	8	8*		8	8	8	8	8	8*		8	8	8		88	16	2.00	3.00	224.00			224.00
		2nd	8	8	8*			8	8	8	8	8		8	8	8	8	8	96	8	2.00	3.00	216.00			216.00
																			TOTALS.				$863.00	$0.90	$11.50	$850.60

* Overtime

Certified to be a true summary of
subject payroll for October, 1952

A.W. Schon

SMITH and RUGG
CONTRACT IDM 278
DMEA 2296
October, 1952

NARRATIVE REPORT

1. #206 Cross-Cut: Advanced from 28.5 ft. to 40.5 ft. Advance during October 12 feet.

2. #207 Drift: Small quartz vein encountered in #206 Crosscut from which we drifted 7.5 ft from center of Crosscut--Advanced 5 feet and vein pinched off.

3. #208 Drift: Advanced 61.5 feet from center of #206 Crosscut. Two inches of good grade ferberite for a length of only about seven feet was drifted through. Fair vein still going ahead in breast. Work stopped here. Advanced 59 feet.

4. Operating Crew: Two partners working 6 days weekly. One extra man for five days.

5. Water: Extension of working has caused some increase in water. Approximately 16,000 gallons per 24 hours.

6. No unusual difficulties encountered.

Joseph M Smith
Joseph M. Smith

Form MF-504 (Rev.)
(April 1952).

UNITED STATES
DEPARTMENT OF THE INTERIOR
DEFENSE MINERALS EXPLORATION ADMINISTRATION

Budget Bureau No. 42-R1036.3.
Approval expires 6-30-53.

DEPARTMENT OF THE INTERIOR
Defense Minerals Administration
RECEIVED
NOV 6 1952

OPERATOR'S MONTHLY REPORT AND VOUCHER

Month of September 195 2 Docket No. DMEA 2296 Contract No. E-278
Operator's Name Joseph M. Smith and Charles R. Rugg Minerals Tungsten
Address P.O. Box 354 Nederland, Colorado
Contract Amount, $ 24,400.00 Government Participation: 75 % Amount, $ 18,300.00

ITEMS OF COSTS	FOR OPERATOR'S USE: Monthly Total	Totals Previously Reported	Totals To Date	FOR GOVERNMENT USE ONLY: Approved Monthly Total	Approved Totals Previously Reported	Approved Totals To Date
(1) Independent Short Form Contracts:						
Drilling						
Bulldozing						
Crosscutting						
Drifting						
(2) Labor and Supervision:						
Labor	432.60	3,704.10	4,136.70			
Supervision	448.00	1,952.00	2,400.00			
Technical Services						
(3) Operating Mat'ls. and Supplies:						
Timber		56.33	56.33			
Explosives	278.82	788.86	1,067.68			
Pipe		174.17	174.17			
Track		71.37	71.37			
Miscellaneous	179.48	1,293.84	1,473.32			
(4) Operating Equipment:						
Rental	100.00	525.00	625.00			
Purchase		198.90	198.90			
Depreciation	40.00	190.00	230.00			
(5) Initial Rehabilitation and Repairs		37.64	37.64			
(6) New Bldgs., Improvements, etc.						
(7) Miscellaneous:						
Repairs to Equipment	53.08	57.18	110.26			
Sampling and Analysis	4.00		4.00			
Payroll Taxes	13.90	16.27*	30.17			
Liability W/Comp	17.00	308.00	325.00			
Bookkeeping	50.00	200.00	250.00			
(8) Contingencies (specify):						
TOTALS	1,616.88	9,573.66	11,190.54	1616.88	9,573.66	11,190.54

I certify that the above bill is correct and just and that payment therefor has not been received.

Date Oct. 6, 1952 Payee Smith & Rugg

Per Joseph M. Smith Title Partner

*When a voucher is signed or receipted in the name of a company or corporation, the name of the person writing the company or corporate name, as well as the capacity in which he signs, must appear. For example: "John Doe Company, per John Smith, Secretary," or "Treasurer," as the case may be.

→ NOTE.—Title 18, U. S. Code (Crimes), section 1001, makes it a criminal offense to make a willfully false statement or representation to any department or agency of the United States as to any matter within its jurisdiction.

(Instructions on reverse)

Pursuant to authority vested in me, I certify that this account is correct and proper for payment in the amount of:

$ 1212.66

Signature [illegible]
(Authorized Certifying Officer)

Date 11/3/52 Vou. No. DMA 53-57
(See other side)

* Payroll taxes for 2nd Quarter paid and included in claim for June, but inadvertently omitted from accumulated totals on August report

(For Government use only)

CERTIFICATION BY GOVERNMENT REPRESENTATIVE:

I certify that to the best of my knowledge and belief the contractor submitting this voucher is operating a Defense Minerals Exploration Administration project under Contract No. E-278 in accordance with the terms of the contract.

Signature R. L. Bolmer, #12.12.6 Title Mining Engineer Date October 22, 1952

APPROVAL BY DMEA EXECUTIVE OFFICER OR ALTERNATE:

Signature ..... Title ..... Date .....

MONTHLY REPORT OF OPERATOR

The Operator (Contractor) of an exploration project is required to make a monthly report to the Government through the Regional Executive Officer. This report consists of three parts as follows:

(a) *Form MF-104—Operator's Monthly Report and Voucher.*—This form details expenditures and constitutes a voucher for reimbursing the Operator for the Government's share of costs;

(b) *Form MF-104A—Operator's Unit Cost and Progress Report.*—This is a statistical report of expenditures which shows costs for the various types of operation; and

(c) *Narrative.*—A concise narrative description of progress made, results accomplished, and any unusual difficulties encountered must be furnished as an attachment to this Report and Voucher. Wherever possible, the narrative is to be illustrated with maps or sketches showing formations penetrated and location and assays of samples taken as well as advances in workings. In the case of diamond drilling or churn drilling, the location and inclination of holes is to be shown on a map; logs and assays also are to be submitted.

The Monthly Report of Operator should be prepared in an original and four copies all of which must be sent to the Executive Officer of the Region not later than the 15th of the month following.

Preparation of Form MF-104—Operator's Monthly Report and Voucher.—All the applicable spaces in Form MF-104 should be filled in by the Operator, and the Operator or his agent should sign the certification in the lower left corner of the form.

The items of costs are arranged in the order they appear in Article 6 (a) of Form MF-200 (Revised February 1952), however, this form is readily adaptable for use in reporting activities under other contract forms.

Under Item (1) delete words "Short Form" if the contract is a sub-contract under Form MF-200; and delete word "Independent" if the contract reported is on Form MF-200 (A). Also, report work paid for on a unit basis under contract Form MF-200 as though it were performed under an independent contract.

Under Item (2) include labor, supervision and technical services incurred for the exploratory operations. Do not include labor, supervision and technical services used for work performed under items (5) and (6).

Under Item (3) include the costs of material and supplies used in the project other than that used under items (5) and (6).

Under Item (4) appear the three types of operating equipment expenditures, that is, rental, purchase and depreciation. The expenditures made for renting equipment belonging to a third party will be reported under "Rental". The amount paid or duly obligated for payment for the purchase of equipment will be reported under "Purchase". The amount of expenditures due the Operator to reimburse him for depreciation of equipment owned will be reported under "Depreciation".

Item (5) comprises costs of labor, supervision, technical services, materials, etc., which are used in the initial rehabilitation and repair of existing buildings, installations, fixtures, and equipment. These costs, therefore, should not be reported under items (2) and (3).

Item (6) includes the labor, supervision, technical services, materials, etc., used in the installation or construction of new buildings, fixed improvements, etc., necessary for the project. These costs, therefore, should not be reported under items (2) and (3).

Item (7) covers miscellaneous types of expenditure such as payroll taxes, liability insurance, workmen's compensation insurance, repairs to equipment and sampling and analysis. Only that part of payroll taxes, liability insurance and workmen's compensation which are paid by the operator should be reported under item (7). The share paid by the employee as a payroll deduction is to be included under item (2) as labor costs.

Item (8) includes any unforeseen costs not included in the other seven categories.

The original of Form MF-104 when submitted for reimbursable expenses incurred under contract Form MF-200 must be supported by original documentation or by certified copies of purchase orders, payrolls or transcripts of payrolls, unless such documentation has been waived by the Regional Executive Officer. This certification may be stated thus, "Certified True Copy (or Transcript)", followed by appropriate signature. If the Executive Officer of the Region determines that a contract under Form MF-200 should have an "on-site" audit, that is, a Government auditor should make an audit of the Operator's books and records of account, the Operator need not support his monthly voucher with original or certified documents except in cases of equipment purchases whose individual costs exceed $50.00. In these cases the original or a certified copy of the purchase order or invoice should be attached to the Monthly Voucher. N. B.—Only the *original* of Form MF-104 is required to be documented. The four copies of Form MF-104 are not to be thus supported.

Form MF-104 submitted for reimbursement under fixed price contracts on Form MF-200 (A), however, are not required to be supported by documentation of any kind. The Operator will submit his claim under item (1) of Form MF-104 by deleting as stated above the word "Independent" and by showing the number of feet or other units immediately after the appropriate descriptive word, such as, drilling, bulldozing, crosscutting, drifting, etc., and giving the "Monthly Total" amount due. "Totals Previously Reported", and "Totals to Date" columns should also be filled in.

GPO 83-38476

Form MF-104A
(April 1952)

Budget Bureau No. 42-R1151
Approval expires 6-30-53.

UNITED STATES
DEPARTMENT OF THE INTERIOR

DEPARTMENT OF THE INTERIOR
Defense Minerals Administration
RECEIVED
OCT 6 1952

DEFENSE MINERALS EXPLORATION ADMINISTRATION

OPERATOR'S UNIT COST AND PROGRESS REPORT

Month of September 1952 Docket No. DMEA 2296 Contract No. E-278
Operator's Name Joseph H. Smith and Charles R. Rugg Minerals Tungsten
Address P. O. Box 354 Nederland, Colorado

OPERATION	UNIT	COSTS THIS MONTH	UNITS THIS MONTH	COSTS TO DATE	UNITS TO DATE	UNIT COSTS TO DATE	AUTHORIZED BY CONTRACT Units	AUTHORIZED BY CONTRACT Unit Costs
Drifting	feet	$ 509.33	24.5	$4,776.72	237.5	$20.11	515	
Crosscutting	feet	1,109.55	44.5	1,537.66	65.5	23.47	125	
Raising	feet			935.83	41.0	22.83	50	
Shafts	feet			2,785.94	35.0	79.60	60	
Winzes								
Drilling: Core								
Churn								
Auger								
Stripping								
Trenching								
Test Pits								
Roads and Trails								
Underground Rehabilitation				917.85				
TOTAL DISTRIBUTED COSTS		1,616.88	69.0	10,954.00	379.0		750	TOTAL COSTS AUTHORIZED BY CONTRACT
Operating Equipment Purchased				198.90				305.00
Initial Rehabilitation and Repairs				37.64				250.00
New Buildings, Improvements, etc.								
TOTAL COSTS		1,616.88		11,190.54				24,400.00

The undersigned company, and the official executing this certification on its behalf, hereby certify that the information contained in this report is correct and complete to the best of their knowledge and belief.

Date Oct. 6, 1952 Operator Smith and Rugg

Per Joseph H. Smith Title Partner

NOTE.—Title 18, U. S. Code (Crimes), section 1001, makes it a criminal offense to make a willfully false statement or representation to any department or agency of the United States as to any matter within its jurisdiction.

REMARKS: Operating costs allocated on basis of labor costs for each operation during the current month, as follows

	Labor	Percent
Drifting	$277.40	31.5
Crosscutting	603.20	68.5
Total	$880.60	100.0%

(Instructions on reverse)

(For Government use only)

INSTRUCTIONS

Preparation of Form MF–104A—Operator's Unit Cost and Progress Report.—Applicable places on Form 104A should be filled in by the Operator. The purpose of this form is twofold as follows: (1) to furnish the supervising engineers and other administrators with statistical information necessary to better determine the progress of the project; and (2) to furnish more permanent information on mining costs for future use. The more important phases of operation on which permanent information is desired have been outlined in the form. There are blank lines, however, for those unusual phases which may need to be reported for a particular project. It will be necessary for the Operator to distribute his costs among the applicable phases reported with the exception of three items the costs of which are not to be distributed by the Operator. These three items are: "Operating Equipment Purchased", "Initial Rehabilitation and Repairs", and "New Buildings, Improvements, etc." The reason for not distributing these items on a monthly basis is doubtless clear to the Operator, since such distribution might well overstate the cost for any one month or period short of the entire contract period.

Form MF–104A has been designed to tie in with Form MF–104 for both monthly and cumulative costs. The "Total Costs" on Form MF–104A for each month should equal the monthly "Total Costs" as reported on Form MF–104. This is also true of the "Total Costs To Date".

In preparing Form MF–104A, it will be necessary frequently to distribute certain costs over a number of items. For instance, supervisory and engineering costs may have to be distributed over several phases, such as, drifting, crosscutting, raising, etc., provided that these items were reported active for the month. Such distributions should be made on the basis of time spent on the various phases, on man days of labor charged to such phases, or on some other equitable basis. "Operating Equipment", "Initial Rehabilitation and Repairs", and "New Buildings Improvements, etc.", will be distributed to the several phases of the project by the Washington Office of DMEA at the close of the project if determined necessary. The last two columns headed "Authorized by Contract" will be filled in by the Operator if such information is found in the contract. This information is usually a part of Exhibit "A" of the contract. A space for remarks has been provided for the use of the Operator to call attention to any unusual circumstances causing excessive or disproportionate unit costs.

U. S. GOVERNMENT PRINTING OFFICE 205676

UNITED STATES
DEPARTMENT OF THE INTERIOR
DEFENSE MINERALS ADMINISTRATION
WASHINGTON 25, D. C.

224 New Customhouse
Denver 2, Colorado

October 30, 1952

Memorandum

To: T. A. Christensen

From: Executive Officer, Field Team, Region IV

Subject: DMEA Docket 2296, Contract Idm-E278, (Tungsten) Smith and Rugg, Rambler Mine, Boulder County, Colorado - Operator's Monthly Progress Report for the period of September, 1952

Enclosed are the original and four copies of Form MF-104 and Form MF-104A, Narrative Report, and Engineer's Report for the above period.

Work has been accomplished as authorized in the contract and payment is recommended for 75 percent of the amount as reported on Form MF-104, contingent on your verification of the correctness of applicable rates and arithmetical accuracy of computations.

W. R. King

W. R. King

Enclosures

WLD:oc

cc: Secretary to the Operating Committee (2)
Contract
WMTraver
Chron.
AHKoschmann (2)

UNITED STATES
DEPARTMENT OF THE INTERIOR
BUREAU OF MINES

XXXXXXXXXXXX
WESTERN REGION

Region IV

Room 137, Building 20
Denver Federal Center
Denver 14, Colorado
October 23, 1952

Memorandum

To: Chief, Colorado Branch, Mining Division, Region IV

From: R. L. Bolmer

Subject: DMEA 2296, Contract Idm-E278 (Tungsten), Smith and Rugg (Rambler mine), Boulder County, Colorado - Progress report for September 1952

Progress under the subject contract was inspected this date with Messrs. Smith and Rugg. The progress as reported in Smith's narrative is correct and complete.

The work performed this period, for which claim is made, is in conformance with the contract and is as reported on form MF-104A.

The supply and service charges claimed this period on form MF-104 are considered necessary and do not appear excessive. All charges are supported by the proper documentation.

Project costs for September 1952 are approved in the amount of $1,616.88. Payment of 75 percent of the approved amount, or $1,212.66, is recommended.

R. L. Bolmer

R. L. Bolmer
Mining Engineer

RLB/amh

cc 6
AHKoschmann
E278
DMEA Chron.

UNITED STATES
DEPARTMENT OF THE INTERIOR
BUREAU OF MINES

Region IV

Room 137, Building 20
Denver Federal Center
Denver 14, Colorado
October 23, 1952

Memorandum

To: Executive Officer, Field Team, Region IV

From: Chief, Colorado Branch, Mining Division, Region IV

Subject: DMEA 2296, Contract Idm-E278 (Tungsten), Smith and Rugg (Rambler mine), Boulder County, Colorado - Progress report for September 1952

Please find enclosed five copies of the above progress report--forms MF-104 (revised) and MF-104A, with proper documentation--and seven copies of R. L. Bolmer's memorandum covering inspection of underground progress and accounts.

Progress underground is correct and the accounts are in order.

Payment of $1,212.66, or 75 percent of the total $1,616.88 claimed by the contractor, is approved.

W. M. Traver, Jr.

W. M. Traver, Jr.

enclosures

WMT/amh

cc 4
AHKoschmann
E278
DMEA Chron.

UNITED STATES
DEPARTMENT OF THE INTERIOR
BUREAU OF MINES

XXXXXXXXXXXX
WESTERN REGION

Region IV

Room 137, Building 20
Denver Federal Center
Denver 14, Colorado
October 23, 1952

Memorandum

To: Chief, Colorado Branch, Mining Division, Region IV

From: R. L. Bolmer

Subject: DMEA 2296, Contract Idm-E278 (Tungsten), Smith and Rugg (Rambler mine), Boulder County, Colorado - Progress report for September 1952

Progress under the subject contract was inspected this date with Messrs. Smith and Rugg. The progress as reported in Smith's narrative is correct and complete.

The work performed this period, for which claim is made, is in conformance with the contract and is as reported on form MF-104A.

The supply and service charges claimed this period on form MF-104 are considered necessary and do not appear excessive. All charges are supported by the proper documentation.

Project costs for September 1952 are approved in the amount of $1,616.88. Payment of 75 percent of the approved amount, or $1,212.66, is recommended.

R. L. Bolmer

R. L. Bolmer
Mining Engineer

RLB/amh

cc 6
AHKoschmann
E278
DMEA Chron.

SMITH and RUGG
CONTRACT - E-278
DMEA - 2296

NARRATIVE REPORT for September, 1952

1. Crosscut #204--Advanced to 20 feet from center of #201 drift. Vein encountered and drift started on same, showing water and quartz. No ore to-date. Net advance this month 18 feet.

2. Drift #205--Advanced 26.5 feet south west from center of #204 crosscut. Poor showing of quartz in breast so discontinued driving this drift temporarily while #206 crosscut is being driven. Net advance this month 24.5 feet.

3. Crosscut #206--At 20 feet north east of shaft, a crosscut was started in foot wall and we advanced to 23.5 feet from center of #202 drift. Granite pegmatite formation showing and no veins encountered as yet. Net advance this month 26.5 feet.

4. Total net advance this month in #204, #205 and #206--69 feet.

5. Drift #201--Necessary to install 6 sets of drift timbers and lag back one side.

6. Operating crew--Total of three men, operators and one man on Saturdays.

7. Unusual difficulties--Only difficulties encountered is lack of help making it necessary for operators to alternate, one on surface one underground. Satisfactory progress is being made, however, it is expected satisfactory help will be more readily available with winter closing of construction projects.

8. Water--Approximately 15,000 gals water daily.

Smith & Rugg
By Joseph M Smith

SMITH and RUGG
DMEA - 2296
CONTRACT - E-278

EXPENSE SUMMARY - September 1952

PAYEE	Ck. No	TOTAL AMOUNT	(2) LABOR & SUPERV. Labor	Superv.	(3) OPERATING SUPPLIES Description	Am't	(4) OPERATING EQUIPMENT Description	Rental	Depr.	(7) MISCELLANEOUS Item	Am't
Hendrie & Bolthoff	90	35.83			Small Tools	35.83					
C & K Oil Co.	97	70.06			Fuel Oil	70.06					
State Compensation Insurance Fund	99	17.00								Comp. Ins.	17.00
Hill and Jude	100	4.00								Assaying	4.00
Industrial Engineering & Supply Co.	101	408.30			Explosives Misc. Sup.	278.82 29.48	Generator & Pump	100.00			
Valentine Hardware Co.	102	69.46			Misc. Sup.	16.38				Repairs	53.08
Wilkins & Schone	103	50.00								Bookkeeping	50.00
Dick's Corner Service	104	27.73			Misc. Sup.	27.73					
Collector of Internal Revenue Employer's Social Security Tax for 3rd Quarter	105	13.90								Soc.Sec. Tax	13.90
Payroll - Per Summary		880.60	432.60	448.00							
Depreciation of Operator's Equipment per contract		40.00					Compressor Jack hammer Dump Truck		25.00 5.00 10.00		
TOTALS.		$1,616.88	432.60	448.00		458.30		100.00	40.00		137.98

SMITH and RUGG
DMFA - 2296
CONTRACT - E-278

PAYROLL - September 1952

		1st Period (dates) 1	2	3	4	5	6	7	8	9	10	11	12	13	14	15	TOTAL HOURS Reg.	TOTAL HOURS O.T.	RATES Reg.	RATES O.T.	GROSS WAGES	Soc. Sec.	W.H. Tax	NET PAID
		2nd Period 16	17	18	19	20	21	22	23	24	25	26	27	28	29	30								
Rugg, Charles R. 521-14-9903 Miner	1st	8	8	8	8	8	8*		8	8	8	8	8	8*		8	88	16	1.65	2.475	$184.80			184.80
	2nd	8	8	8	8	8*		8	8	8	8	8	8*		8	8	88	16	1.65	2.475	184.80			184.80
Smith, Michael B. 523-40-7790 Hoistman	1st	4					8							8			20		1.50		30.00	.45	5.25	24.30
	2nd					8							8			6	22		1.50		33.00	.50	5.77	26.73
Smith, Joseph M. 522-07-9589 Supervisor	1st	8	8	8	8	8	8*		8	8	8	8	8	8*		8	88	16	2.00	3.00	224.00			224.00
	2nd	8	8	8	8	8*		8	8	8	8	8	8*		8	8	88	16	2.00	3.00	224.00			224.00
																	TOTALS.				$880.60	$ .95	$ 11.02	$868.63

* Overtime

Certified to be a true summary of
subject payroll for September 1952
C.W. Shone

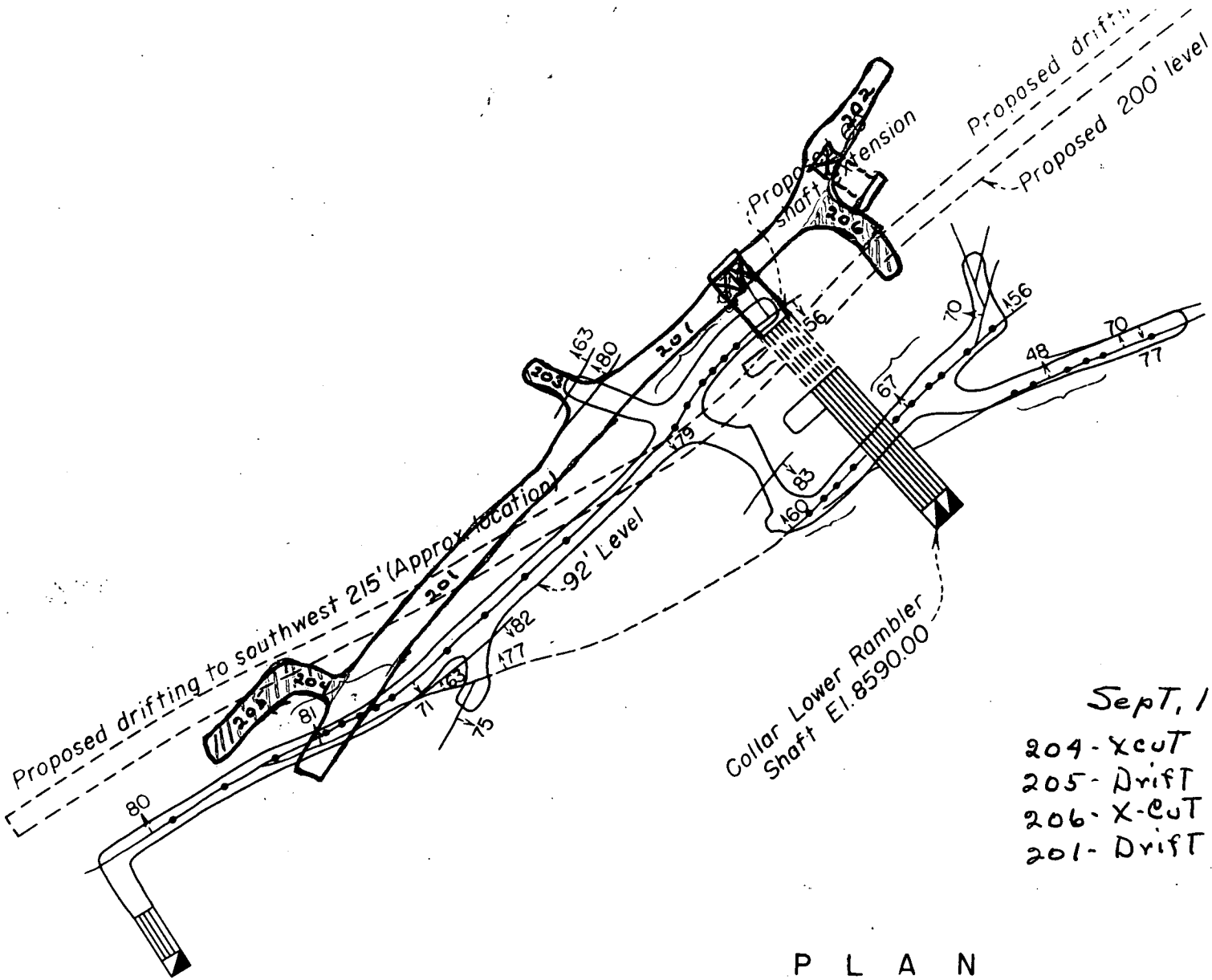

Sept, 1952

204 - X cut 0' To 18'
205 - Drift 0' To 26.5'
206 - X-cut 0' To 28.5'
201 - Drift 6 sets Timber

P L A N

(SHOWING PRESENT WORKINGS & PROPOSED EXPLORATION)

30 0 30 60 90

SCALE OF FEET

Form M[illegible]104 (Rev.)
(Ap[illegible]952)

UNITED STATES
DEPARTMENT OF THE INTERIOR
DEFENSE MINERALS EXPLORATION ADMINISTRATION

Budget Bureau No. 42-R1036.3.
Approval expires 6-30-53.

OPERATOR'S MONTHLY REPORT AND VOUCHER

Month of August, 1952 Docket No. DMEA _____ Contract No. E 278
Operator's Name Joseph M. Smith & Charles R. Rugg Minerals Tungsten
Address P. O. Box 354 - Nederland, Colorado
Contract Amount, $ 24,400.00 Government Participation: 75 % Amount, $ 18,300.00

ITEMS OF COSTS	FOR OPERATOR'S USE			FOR GOVERNMENT USE ONLY		
	Monthly Total	Totals Previously Reported	Totals To Date	Approved Monthly Total	Approved Totals Previously Reported	Approved Totals To Date
(1) Independent / Short Form Contracts:						
Drilling						
Bulldozing						
Crosscutting						
Drifting						
(2) Labor and Supervision:						
Labor	622.20	3,081.90	3,704.10			
Supervision	400.00	1,552.00	1,952.00			
Technical Services						
(3) Operating Mat'ls. and Supplies:						
Timber		56.33	56.33			
Explosives		788.86	788.86			
Pipe		174.17	174.17			
Track		71.37	71.37			
Miscellaneous	58.25	1,235.59	1,293.84			
(4) Operating Equipment:						
Rental	100.00	425.00	525.00			
Purchase		198.90	198.90			
Depreciation	40.00	150.00	190.00			
(5) Initial Rehabilitation and Repairs		37.64	37.64			
(6) New Bldgs., Improvements, etc.						
(7) Miscellaneous:						
Repairs to Equipment		57.18	57.18			
Sampling and Analysis						
Payroll Taxes						
~~Liability~~ Insurance W/Comp	55.00	253.00	308.00			
Bookkeeping	50.00	150.00	200.00			
(8) Contingencies (specify):						
TOTALS	1,325.45	8,231.94	9,557.39	~~1,325.45~~ 1,325.45	~~8,231.94~~ * 16.27 8,248.21	~~9,557.39~~ 16.27 9,573.66

I certify that the above bill is correct and just and that payment therefor has not been received.

Date Sept. 11, 52 *Payee Smith & Rugg

Per Joseph M. Smith Title Partner

*When a voucher is signed or receipted in the name of a company or corporation, the name of the person writing the company or corporate name, as well as the capacity in which he signs, must appear. For example: "John Doe Company, per John Smith, Secretary," or "Treasurer," as the case may be.

NOTE.—Title 18, U. S. Code (Crimes), section 1001, makes it a criminal offense to make a willfully false statement or representation to any department or agency of the United States as to any matter within its jurisdiction.

(Instructions on reverse)

Pursuant to authority vested in me, I certify that this account is correct and proper for payment in the amount of:

$ 994.09

Signature [illegible]
(Authorized Certifying Officer)

Date 10/1/52 Vou. [illegible] 52-42
(See other side)

*Payroll taxes erroneously not carried forward by operator.

(For Government use only)

CERTIFICATION BY GOVERNMENT REPRESENTATIVE:

I certify that to the best of my knowledge and belief the contractor submitting this voucher is operating a Defense Minerals Exploration Administration project under Contract No. E-278 in accordance with the terms of the contract.

Signature R. L. Belmer #994.09 Title Mining Engineer Date Sept. 19, 1952

APPROVAL BY DMEA EXECUTIVE OFFICER OR ALTERNATE #994.09

Signature W. H. Rising Title Executive Officer Date 9/26/52

MONTHLY REPORT OF OPERATOR

The Operator (Contractor) of an exploration project is required to make a monthly report to the Government through the Regional Executive Officer. This report consists of three parts as follows:

(a) *Form MF-104—Operator's Monthly Report and Voucher.*—This form details expenditures and constitutes a voucher for reimbursing the Operator for the Government's share of costs;

(b) *Form MF-104A—Operator's Unit Cost and Progress Report.*—This is a statistical report of expenditures which shows costs for the various types of operation; and

(c) *Narrative.*—A concise narrative description of progress made, results accomplished, and any unusual difficulties encountered must be furnished as an attachment to this Report and Voucher. Wherever possible, the narrative is to be illustrated with maps or sketches showing formations penetrated and location and assays of samples taken as well as advances in workings. In the case of diamond drilling or churn drilling, the location and inclination of holes is to be shown on a map; logs and assays also are to be submitted.

The Monthly Report of Operator should be prepared in an original and four copies all of which must be sent to the Executive Officer of the Region not later than the 15th of the month following.

Preparation of Form MF-104—Operator's Monthly Report and Voucher.—All the applicable spaces in Form MF-104 should be filled in by the Operator, and the Operator or his agent should sign the certification in the lower left corner of the form.

The items of costs are arranged in the order they appear in Article 6 (a) of Form MF-200 (Revised February 1952), however, this form is readily adaptable for use in reporting activities under other contract forms.

Under Item (1) delete words "Short Form" if the contract is a sub-contract under Form MF-200; and delete word "Independent" if the contract reported is on Form MF-200 (A). Also, report work paid for on a unit basis under contract Form MF-200 as though it were performed under an independent contract.

Under Item (2) include labor, supervision and technical services incurred for the exploratory operations. Do not include labor, supervision and technical services used for work performed under items (5) and (6).

Under Item (3) include the costs of material and supplies used in the project other than that used under items (5) and (6).

Under Item (4) appear the three types of operating equipment expenditures, that is, rental, purchase and depreciation. The expenditures made for renting equipment belonging to a third party will be reported under "Rental". The amount paid or duly obligated for payment for the purchase of equipment will be reported under "Purchase". The amount of expenditures due the Operator to reimburse him for depreciation of equipment owned will be reported under "Depreciation".

Item (5) comprises costs of labor, supervision, technical services, materials, etc., which are used in the initial rehabilitation and repair of existing buildings, installations, fixtures, and equipment. These costs, therefore, should not be reported under items (2) and (3).

Item (6) includes the labor, supervision, technical services, materials, etc., used in the installation or construction of new buildings, fixed improvements, etc., necessary for the project. These costs, therefore, should not be reported under items (2) and (3).

Item (7) covers miscellaneous types of expenditure such as payroll taxes, liability insurance, workmen's compensation insurance, repairs to equipment and sampling and analysis. Only that part of payroll taxes, liability insurance and workmen's compensation which are paid by the operator should be reported under item (7). The share paid by the employee as a payroll deduction is to be included under item (2) as labor costs.

Item (8) includes any unforeseen costs not included in the other seven categories.

The original of Form MF-104 when submitted for reimbursable expenses incurred under contract Form MF-200 must be supported by original documentation or by certified copies of purchase orders, payrolls or transcripts of payrolls, unless such documentation has been waived by the Regional Executive Officer. This certification may be stated thus, "Certified True Copy (or Transcript)", followed by appropriate signature. If the Executive Officer of the Region determines that a contract under Form MF-200 should have an "on-site" audit, that is, a Government auditor should make an audit of the Operator's books and records of account, the Operator need not support his monthly voucher with original or certified documents except in cases of equipment purchases whose individual costs exceed $50.00. In these cases the original or a certified copy of the purchase order or invoice should be attached to the Monthly Voucher. N. B.—Only the *original* of Form MF-104 is required to be documented. The four copies of Form MF-104 are not to be thus supported.

Form MF-104 submitted for reimbursement under fixed price contracts on Form MF-200 (A), however, are not required to be supported by documentation of any kind. The Operator will submit his claim under item (1) of Form MF-104 by deleting as stated above the word "Independent" and by showing the number of feet or other units immediately after the appropriate descriptive word, such as, drilling, bulldozing, crosscutting, drifting, etc., and giving the "Monthly Total" amount due. "Totals Previously Reported", and "Totals to Date" columns should also be filled in.

U. S. GOVERNMENT PRINTING OFFICE 205675

Form MF-104A
(April 1[illegible])

Budget Bureau No. 42-R1151
Approval expires 6-30-53.

UNITED STATES
DEPARTMENT OF THE INTERIOR

DEFENSE MINERALS EXPLORATION ADMINISTRATION

OPERATOR'S UNIT COST AND PROGRESS REPORT

Month of August 1952 Docket No. DMEA 2296 Contract No. E 278

Operator's Name Joseph M. Smith & Charles R. Rugg Minerals Tungsten

Address P. O. Box 354 - Nederland, Colorado

OPERATION	UNIT	COSTS THIS MONTH	UNITS THIS MONTH	COSTS TO DATE	UNITS TO DATE	UNIT COSTS TO DATE	AUTHORIZED BY CONTRACT Units	AUTHORIZED BY CONTRACT Unit Costs
Drifting	feet	$1,325.45	68	$4,267.39*	213	$20.03	515	
Crosscutting	feet			430.11	21	20.48	125	
Raising	feet			935.83	41	22.83	50	
Shafts	feet			2,785.94*	35	79.60	60	
Winzes								
Drilling: Core								
Churn								
Auger								
Stripping								
Trenching								
Test Pits								
Roads and Trails								
Underground Rehabilitation				917.85*				
TOTAL DISTRIBUTED COSTS		1,325.45	68	9,337.12	310		750	TOTAL COSTS AUTHORIZED BY CONTRACT
Operating Equipment Purchased				198.90				305.00
Initial Rehabilitation and Repairs				37.64				250.00
New Buildings, Improvements, etc								
TOTAL COSTS		1,325.45		9,573.66				24,400.00

The undersigned company, and the official executing this certification on its behalf, hereby certify that the information contained in this report is correct and complete to the best of their knowledge and belief.

Date Sept 11, 52 Operator Smith & Rugg

Per Joseph M Smith Title Partner

→ NOTE.—Title 18, U. S. Code (Crimes), section 1001, makes it a criminal offense to make a willfully false statement or representation to any department or agency of the United States as to any matter within its jurisdiction.

REMARKS: * Underground rehabilitation costs ($917.85) which were shown in unit costs for drifting and shafts last month, have been eliminated therefrom and shown as a separate item herein per instructions of Mr. Balmer.

(Instructions on reverse)

(For Government use only)

INSTRUCTIONS

Preparation of Form MF–104A—Operator's Unit Cost and Progress Report.—Applicable places on Form 104A should be filled in by the Operator. The purpose of this form is twofold as follows: (1) to furnish the supervising engineers and other administrators with statistical information necessary to better determine the progress of the project; and (2) to furnish more permanent information on mining costs for future use. The more important phases of operation on which permanent information is desired have been outlined in the form. There are blank lines, however, for those unusual phases which may need to be reported for a particular project. It will be necessary for the Operator to distribute his costs among the applicable phases reported with the exception of three items the costs of which are not to be distributed by the Operator. These three items are: "Operating Equipment Purchased", "Initial Rehabilitation and Repairs", and "New Buildings, Improvements, etc." The reason for not distributing these items on a monthly basis is doubtless clear to the Operator, since such distribution might well overstate the cost for any one month or period short of the entire contract period.

Form MF–104A has been designed to tie in with Form MF–104 for both monthly and cumulative costs. The "Total Costs" on Form MF–104A for each month should equal the monthly "Total Costs" as reported on Form MF–104. This is also true of the "Total Costs To Date".

In preparing Form MF–104A, it will be necessary frequently to distribute certain costs over a number of items. For instance, supervisory and engineering costs may have to be distributed over several phases, such as, drifting, crosscutting, raising, etc., provided that these items were reported active for the month. Such distributions should be made on the basis of time spent on the various phases, on man days of labor charged to such phases, or on some other equitable basis. "Operating Equipment", "Initial Rehabilitation and Repairs", and "New Buildings Improvements, etc.", will be distributed to the several phases of the project by the Washington Office of DMEA at the close of the project if determined necessary. The last two columns headed "Authorized by Contract" will be filled in by the Operator if such information is found in the contract. This information is usually a part of Exhibit "A" of the contract. A space for remarks has been provided for the use of the Operator to call attention to any unusual circumstances causing excessive or disproportionate unit costs.

U. S. GOVERNMENT PRINTING OFFICE 205676

UNITED STATES
DEPARTMENT OF THE INTERIOR
BUREAU OF MINES

Mining Division
Region IV

September 26, 1952

Memorandum

To: T. A. Christensen

From: Acting Chief, Mining Division, Region IV

Subject: DMEA Docket 2296, Contract Idm-E278 (Tungsten), Smith and Rugg, Rambler Mine, Boulder County, Colorado - Operator's Monthly Progress Report, for the period August 1952

Enclosed are the original and four copies of Form MF-104 and Form MF-104A, Narrative Report, and Engineer's Report for the above period.

Work accomplished is in accordance with the contract and payment is recommended for the amount of $994.09, which is 75 percent of the total of $1,325.45.

It is noted that the operator has deleted the amount of $16.27 from the totals previously reported column. The amount originally reported in June was carried forward in July as payroll taxes, item (7). This amount represented the operator's FICA for the June payroll.

W. H. King

W. H. King

Enclosures

WLD:fwo

cc: Sec. Oper. Comm. (2)
WMTraver, Jr.
Contract
Koschmann (2)
Chron

UNITED STATES
DEPARTMENT OF THE INTERIOR
BUREAU OF MINES

Region IV

Building 20
Denver Federal Center
Denver 14, Colorado

September 22, 1952

Memorandum

To: Executive Officer, Field Team, Region IV

From: Chief, Colorado Branch, Mining Division, Region IV

Subject: DMEA 2296, Contract Idm-E278 (Tungsten), Smith and Rugg, Rambler mine, Boulder County, Colorado - Progress report for August 1952

Please find enclosed five copies of the above progress report, forms MF-104 (revised) and MF-104A, with payroll, narrative, cost summary distribution, and one certified copy only of invoices, and seven copies of R. L. Bolmer's memorandum covering inspection of underground progress and accounts.

Payment of $994.09, or 75 percent of the total $1,325.45 claimed by the contractor, is approved.

W. M. Traver, Jr.

W. M. Traver, Jr.

Enclosures

WMT/bam

cc 4
AHKoschmann
E278
DMEA Chron.

UNITED STATES
DEPARTMENT OF THE INTERIOR
BUREAU OF MINES

Region IV

Building 20
Denver Federal Center
Denver 14, Colorado

September 22, 1952

Memorandum

To: Chief, Colorado Branch, Mining Division, Region IV

From: R. L. Bolmer

Subject: DMEA 2296, Contract Idm-E278 (Tungsten), Smith and Rugg, Rambler mine, Boulder County, Colorado - Progress report for August 1952

Progress under the subject contract was inspected September 16, 1952, with Messrs. Smith and Rugg. The progress as reported in Smith's narrative is correct and complete.

The work performed this period, for which claim is made, is in conformance with the contract and is as reported on form MF-104A.

The supply and service charges claimed on form MF-104 are considered necessary and do not appear excessive. All charges are supported by the proper documentation.

Project costs for August 1952 are approved in the amount of $1,325.45. Payment of 75 percent of the approved amount, or $994.09, is recommended.

R. L. Bolmer

R. L. Bolmer
Mining Engineer

RLB/bem

cc 6
AHKoschmann
E278
DMEA Chron.

SMITH and RUGG (Rambler Mine)
CONTRACT I.D.M. E-278
DMEA 2296

NARRATIVE REPORT - AUGUST, 1952

1. DRIFT SOUTH WEST

Advanced 68 feet, making a total of 153 feet from shaft. Small quartz streak showing some ferberite encountered on foot wall side of drift and ore continued in drift for about 15 feet. Vein turning to left and weakening ahead. Operators believe main Rambler vein is a short distance in hanging wall at present breast. Should test drill hole prove this to be true, a short cross cut will be started near this point. Granite and Pegmatite.

2. No other headings advanced during month.

3. OPERATING CREW

Total of three men all during month of August. Six days weekly.

4. WATER

Approximately 15,000 gallons water pumped daily by one pump operating about 3½ hours per day.

5. No unusual difficulties encountered.

Joseph M. Smith
Smith & Rugg
By Joseph M. Smith

Smith & Rugg
DMEA - 2296
CONTRACT - E278

EXPENSE SUMMARY - AUGUST 1952

VENDOR	CK. No.	TOTAL AMOUNT	(2) LABOR & SUPV. Labor	Supv.	(3) OPERATING SUPPLIES Description	Misc.	(4) OPERATING EQUIPMENT Description	Rental	Depr.	(7) MISCELLANEOUS Description	Amount
Payroll- Per Summary attached		1,022.20	622.20	400.00							
State Compensation Insurance July	76	31.00								Work Comp(July)	31.00
Wilkins & Schone	84	50.00								Bookkeeping	50.00
State Compensation Ins. August	85	24.00								Work Comp(Aug)	24.00
Jim Pearce Drill Shop	86	39.72			Misc. Supplies	39.72					
Industrial Engineering & Supply Co.	87	3.61			Credit for Misc. Supplies	96.39	Generator	100.00			
C & K Oil Company	88	99.23			Fuel	99.23					
Standard Machine Works	89	15.69			Misc. Supplies	15.69					
Depreciation of Owner's Equipment per contract		40.00					Compressor		25.00		
							Jack Hammer		5.00		
							Dump Truck		10.00		
TOTALS- - - - - - - - - - - -		$1,325.45	622.20	400.00		58.25		100.00	40.00		105.00

SMITH & RUGG
DMEA - 2296
CONTRACT - E278

PAYROLL - AUGUST 1952

		1	2	3	4	5	6	7	8	9	10	11	12	13	14	15	TOTAL HOURS		RATES		GROSS	SOC.SEC.	W.H.	NET
	1st period (dates)																							
	2nd period	16	17	18	19	20	21	22	23	24	25	26	27	28	29	30	31	Reg.	O.T.	Reg.	O.T.	WAGES	TAX	TAX	PAID
Rugg, Charles R. 521-14-9903 Miner	1st	8	8*		8	8	8	8	8	8*		8	8	8	8	8		88	16	$1.65	$2.475	$ 184.80			$184.80
	2nd	8*		8		8	8	8	8		8	8	8					64	8	1.65	2.475	125.40			125.40
Smith, Michael B. 523-40-7790 Hoistman	1st	8	8*		8	8	8	8	8	8*		8	8	8	8	8		88	16	1.50	2.25	168.00	2.52	28.40	137.08
	2nd	8*		8				8	8		8	8	8	8	8	8*		64	16	1.50	2.25	132.00	1.98	21.20	108.82
Rugg, Merle 523-09-8181 Mucker	1st	8																8		1.50		12.00	.18	2.10	9.72
	2nd																								
Smith, Joseph M. 522-07-9589 Supervisor	1st	8	8*		8	8	8	8	8	8*		8	8	8	8	8		88	16	2.00	3.00	224.00			224.00
	2nd	8*		8				8	8		8	8	8	8	8	8*		64	16	2.00	3.00	176.00			176.00
TOTALS																						$1,022.20	$4.68	$51.70	$965.82

* Overtime

Certified to be a true summary of subject payroll for August 1952

C. W. Thorne

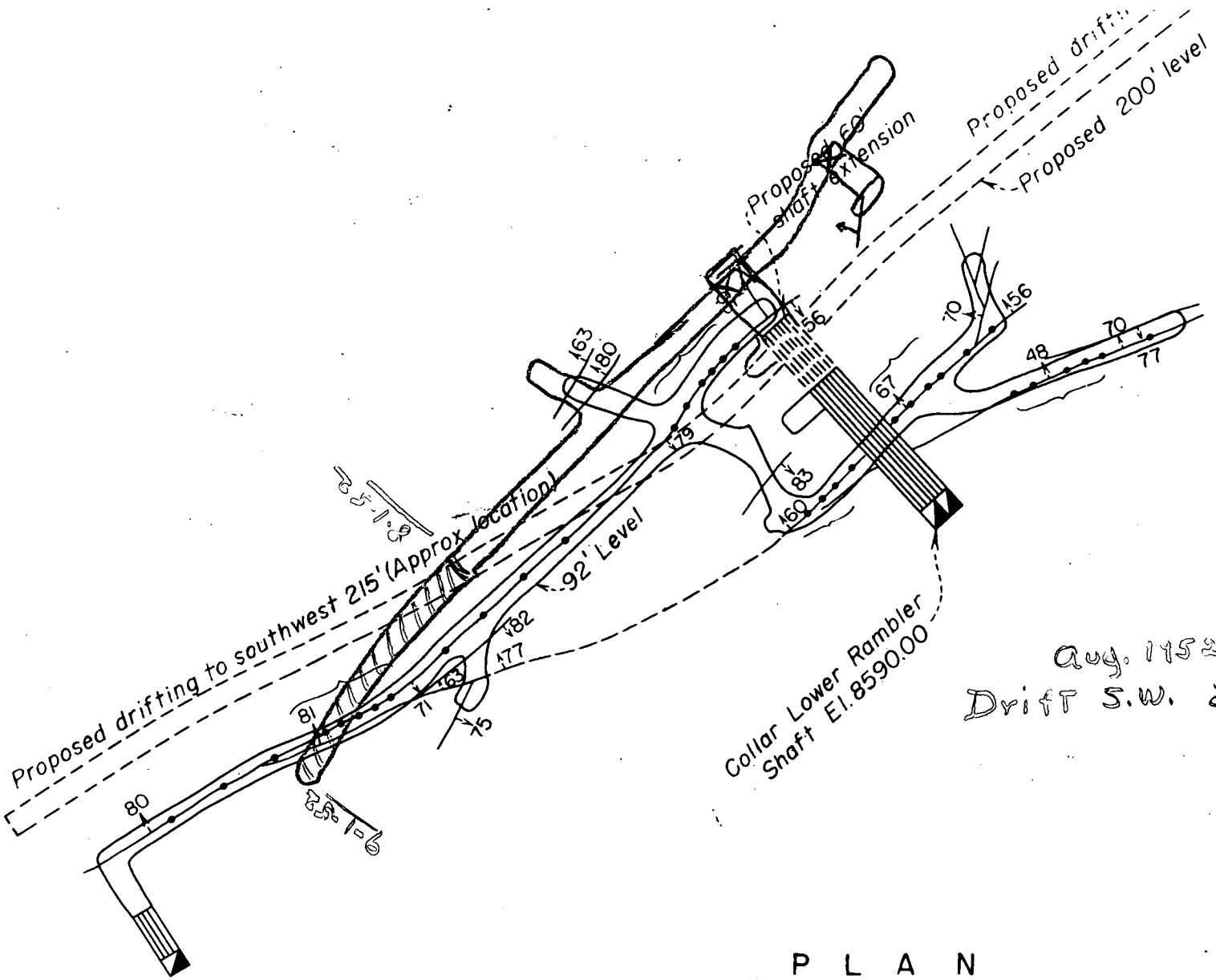

Aug. 1952 -
Drift S.W. 85' To 153'

P L A N

(SHOWING PRESENT WORKINGS & PROPOSED EXPLORATION)

30 0 30 60 90

SCALE OF FEET

Form MF-104 (Rev.)
(April 1952)

Budget Bureau No. 42-R1036.3.
Approval expires 6-30-53.

UNITED STATES
DEPARTMENT OF THE INTERIOR
DEFENSE MINERALS EXPLORATION ADMINISTRATION

Defense Minerals Administration
RECEIVED
SEP 22 1952

OPERATOR'S MONTHLY REPORT AND VOUCHER

Month of July, 1952 Docket No. DMEA 2296 Contract No. 270
Operator's Name Joseph M. Smith & Charles B. [illegible] Minerals Tungsten
Address R.F.D. 3Bx - Nederland, Colorado
Contract Amount, $ 24,000.00 Government Participation: 75% Amount, $ [illegible]

ITEMS OF COSTS	FOR OPERATOR'S USE: Monthly Total	Totals Previously Reported	Totals To Date	FOR GOVERNMENT USE ONLY: Approved Monthly Total	Approved Totals Previously Reported	Approved Totals To Date
(1) Independent Short Form Contracts:						
Drilling						
Bulldozing						
Crosscutting						
Drifting						
(2) Labor and Supervision:						
Labor	915.00	2,166.00	3,081.00			
Supervision	438.00	1,1[illegible].00	1,592.00			
Technical Services						
(3) Operating Mat'ls. and Supplies:						
Timber		96.33	96.33			
Explosives	425.36	303.52	7[illegible]			
Pipe		176.17	176.17			
Track		71.37	71.37			
Miscellaneous	362.[illegible]	872.71	1,232.59			
(4) Operating Equipment:						
Rental	100.00	325.00	425.00			
Purchase		198.90	1[illegible].90			
Depreciation	40.00	110.00	150.00			
(5) Initial Rehabilitation and Repairs		37.64	37.64			
(6) New Bldgs., Improvements, etc.						
(7) Miscellaneous:						
Repairs to Equipment		57.10	57.10			
Sampling and Analysis						
Payroll Taxes		16.27	16.27			
Liability Insurance	66.00	187.00	253.00			
[illegible]	50.00	1[illegible]	15[illegible].00			
(8) Contingencies (specify):						
TOTALS	2,363.22	5,884.99	8,248.21	2,363.22	5,884.99	8,248.21

I certify that the above bill is correct and just and that payment therefor has not been received.

Date 8/12/52 *Payee [illegible]

Per Joseph M. Smith Title Partner

*When a voucher is signed or receipted in the name of a company or corporation, the name of the person writing the company or corporate name, as well as the capacity in which he signs, must appear. For example: "John Doe Company, per John Smith, Secretary," or "Treasurer," as the case may be.

→ NOTE.—Title 18, U. S. Code (Crimes), section 1001, makes it a criminal offense to make a willfully false statement or representation to any department or agency of the United States as to any matter within its jurisdiction.

(Instructions on reverse)

Pursuant to authority vested in me, I certify that this account is correct and proper for payment in the amount of:

$1772.41

Signature Naomi E. Stotes
(Authorized Certifying Officer)

Date 9/16/52 Vou. DMA 53-32
(See other side)

(For Government use only)

CERTIFICATION BY GOVERNMENT REPRESENTATIVE:

I certify that to the best of my knowledge and belief the contractor submitting this voucher is operating a Defense Minerals Exploration Administration project under Contract No. E-278 in accordance with the terms of the contract.

Signature R. P. Bolmer #1772.41 Title Mining Engineer Date August 14, 1952

APPROVAL BY DMEA EXECUTIVE OFFICER OR ALTERNATE:

Signature ..... Title ..... Date .....

MONTHLY REPORT OF OPERATOR

The Operator (Contractor) of an exploration project is required to make a monthly report to the Government through the Regional Executive Officer. This report consists of three parts as follows:

(a) *Form MF-104—Operator's Monthly Report and Voucher.*—This form details expenditures and constitutes a voucher for reimbursing the Operator for the Government's share of costs;

(b) *Form MF-104A—Operator's Unit Cost and Progress Report.*—This is a statistical report of expenditures which shows costs for the various types of operation; and

(c) *Narrative.*—A concise narrative description of progress made, results accomplished, and any unusual difficulties encountered must be furnished as an attachment to this Report and Voucher. Wherever possible, the narrative is to be illustrated with maps or sketches showing formations penetrated and location and assays of samples taken as well as advances in workings. In the case of diamond drilling or churn drilling, the location and inclination of holes is to be shown on a map; logs and assays also are to be submitted.

The Monthly Report of Operator should be prepared in an original and four copies all of which must be sent to the Executive Officer of the Region not later than the 15th of the month following.

Preparation of Form MF-104—Operator's Monthly Report and Voucher.—All the applicable spaces in Form MF-104 should be filled in by the Operator, and the Operator or his agent should sign the certification in the lower left corner of the form.

The items of costs are arranged in the order they appear in Article 6 (a) of Form MF-200 (Revised February 1952), however, this form is readily adaptable for use in reporting activities under other contract forms.

Under Item (1) delete words "Short Form" if the contract is a sub-contract under Form MF-200; and delete word "Independent" if the contract reported is on Form MF-200 (A). Also, report work paid for on a unit basis under contract Form MF-200 as though it were performed under an independent contract.

Under Item (2) include labor, supervision and technical services incurred for the exploratory operations. Do not include labor, supervision and technical services used for work performed under items (5) and (6).

Under Item (3) include the costs of material and supplies used in the project other than that used under items (5) and (6).

Under Item (4) appear the three types of operating equipment expenditures, that is, rental, purchase and depreciation. The expenditures made for renting equipment belonging to a third party will be reported under "Rental". The amount paid or duly obligated for payment for the purchase of equipment will be reported under "Purchase". The amount of expenditures due the Operator to reimburse him for depreciation of equipment owned will be reported under "Depreciation".

Item (5) comprises costs of labor, supervision, technical services, materials, etc., which are used in the initial rehabilitation and repair of existing buildings, installations, fixtures, and equipment. These costs, therefore, should not be reported under items (2) and (3).

Item (6) includes the labor, supervision, technical services, materials, etc., used in the installation or construction of new buildings, fixed improvements, etc., necessary for the project. These costs, therefore, should not be reported under items (2) and (3).

Item (7) covers miscellaneous types of expenditure such as payroll taxes, liability insurance, workmen's compensation insurance, repairs to equipment and sampling and analysis. Only that part of payroll taxes, liability insurance and workmen's compensation which are paid by the operator should be reported under item (7). The share paid by the employee as a payroll deduction is to be included under item (2) as labor costs.

Item (8) includes any unforeseen costs not included in the other seven categories.

The original of Form MF-104 when submitted for reimbursable expenses incurred under contract Form MF-200 must be supported by original documentation or by certified copies of purchase orders, payrolls or transcripts of payrolls, unless such documentation has been waived by the Regional Executive Officer. This certification may be stated thus, "Certified True Copy (or Transcript)", followed by appropriate signature. If the Executive Officer of the Region determines that a contract under Form MF-200 should have an "on-site" audit, that is, a Government auditor should make an audit of the Operator's books and records of account, the Operator need not support his monthly voucher with original or certified documents except in cases of equipment purchases whose individual costs exceed $50.00. In these cases the original or a certified copy of the purchase order or invoice should be attached to the Monthly Voucher. N. B.—Only the *original* of Form MF-104 is required to be documented. The four copies of Form MF-104 are not to be thus supported.

Form MF-104 submitted for reimbursement under fixed price contracts on Form MF-200 (A), however, are not required to be supported by documentation of any kind. The Operator will submit his claim under item (1) of Form MF-104 by deleting as stated above the word "Independent" and by showing the number of feet or other units immediately after the appropriate descriptive word, such as, drilling, bulldozing, crosscutting, drifting, etc., and giving the "Monthly Total" amount due. "Totals Previously Reported", and "Totals to Date" columns should also be filled in.

U. S. GOVERNMENT PRINTING OFFICE 205675

Form MF-104A
(April 1952)

Budget Bureau No. 42-R1151
Approval expires 6-30-53.

UNITED STATES
DEPARTMENT OF THE INTERIOR

DEFENSE MINERALS EXPLORATION ADMINISTRATION

OPERATOR'S UNIT COST AND PROGRESS REPORT

SEP 22 1952

Month of July 1952 Docket No. DMEA 2296 Contract No. E 270

Operator's Name Joseph M. Smith and Charles H. Rugg Minerals Tungsten

Address P.O. Box 354 - Nederland, Colorado

OPERATION	Unit	Costs This Month	Units This Month	Costs to Date	Units to Date	Unit Costs to Date	Authorized by Contract: Units	Authorized by Contract: Unit Costs
Drifting	feet	997.20	43	3,319.10	145	22.09	215	
Crosscutting	feet	430.11	21	430.11	21	20.48	125	
Raising	feet	955.03	41	955.03	41	22.02	50	
Shafts	feet			3,326.55	35	95.04	60	
Winzes								
Drilling: Core								
Churn								
Auger								
Stripping								
Trenching								
Test Pits								
Roads and Trails								
Total Distributed Costs		2,303.22	105	8,011.07	242		750	Total Costs Authorized by Contract
Operating Equipment Purchased				198.90				305.00
Initial Rehabilitation and Repairs				37.04				250.00
New Buildings, Improvements, etc.								
Total Costs		2,303.22		8,248.21				26,430.00

The undersigned company, and the official executing this certification on its behalf, hereby certify that the information contained in this report is correct and complete to the best of their knowledge and belief.

Date 8/12/52 Operator SMITH & RUGG

Per Joseph M Smith Title Partner

→ NOTE.—Title 18, U. S. Code (Crimes), section 1001, makes it a criminal offense to make a willfully false statement or representation to any department or agency of the United States as to any matter within its jurisdiction.

(Instructions on reverse)

(For Government use only)

Remarks: Current costs allocated on basis of labor and observation for each operation as follows:

	Labor	$
Drifting	55.10	42.2
Crosscutting	8.00	10.2
Raising	33.00	37.6
Shafts		
	1,319.07	150.0

Rehabilitation and maintenance of shaft in the amount of $91.05 per prior report has been pro-rated to drifting and sinking one to the costs-to-date column.

INSTRUCTIONS

Preparation of Form MF–104A—Operator's Unit Cost and Progress Report.—Applicable places on Form 104A should be filled in by the Operator. The purpose of this form is twofold as follows: (1) to furnish the supervising engineers and other administrators with statistical information necessary to better determine the progress of the project; and (2) to furnish more permanent information on mining costs for future use. The more important phases of operation on which permanent information is desired have been outlined in the form. There are blank lines, however, for those unusual phases which may need to be reported for a particular project. It will be necessary for the Operator to distribute his costs among the applicable phases reported with the exception of three items the costs of which are not to be distributed by the Operator. These three items are: "Operating Equipment Purchased", "Initial Rehabilitation and Repairs", and "New Buildings, Improvements, etc." The reason for not distributing these items on a monthly basis is doubtless clear to the Operator, since such distribution might well overstate the cost for any one month or period short of the entire contract period.

Form MF–104A has been designed to tie in with Form MF–104 for both monthly and cumulative costs. The "Total Costs" on Form MF–104A for each month should equal the monthly "Total Costs" as reported on Form MF–104. This is also true of the "Total Costs To Date".

In preparing Form MF–104A, it will be necessary frequently to distribute certain costs over a number of items. For instance, supervisory and engineering costs may have to be distributed over several phases, such as, drifting, crosscutting, raising, etc., provided that these items were reported active for the month. Such distributions should be made on the basis of time spent on the various phases, on man days of labor charged to such phases, or on some other equitable basis. "Operating Equipment", "Initial Rehabilitation and Repairs", and "New Buildings Improvements, etc.", will be distributed to the several phases of the project by the Washington Office of DMEA at the close of the project if determined necessary. The last two columns headed "Authorized by Contract" will be filled in by the Operator if such information is found in the contract. This information is usually a part of Exhibit "A" of the contract. A space for remarks has been provided for the use of the Operator to call attention to any unusual circumstances causing excessive or disproportionate unit costs.

U. S. GOVERNMENT PRINTING OFFICE 205676

SMITH & RUGG
DMEA - 2296
CONTRACT - E 278

EXPENSE SUMMARY - July, 1952

VENDOR	Ck. No.	TOTAL AMOUNT	(2) LABOR & SUPERVISION Labor	Supv.	(3) OPERATING SUPPLIES Explo.	Misc.	(4) OPERATING EQUIPMENT Description	Rental	Depr.	(7) MISCELLANEOUS Ins.	Pkpg.
Payroll - Per Summary Attached		1,319.00	915.00	404.00							
State Compensation Insurance - May	57	41.00								41.00	
State Compensation Insurance - June	60	25.00								25.00	
Dick's Corner Service Station	62	4.16				4.16					
" " " "	62	4.25				4.25					
" " " "	62	2.85				2.85					
" " " "	62	3.05				3.05					
" " " "	62	2.50				2.50					
" " " "	62	3.00				3.00					
Industrial Engineering & Supply Co.	63	96.39				96.39					
" " "	63	426.58			425.34	1.24					
" " "	63	100.00					Generator	100.00			
Jim Pearce Drill Steel Shop	70	86.24				86.24					
Valentine Hardware Company	71	1.99				1.99					
Wilkins & Schone	72	50.00									50.00
C & K Oil Company	74	60.32				60.32					
" " " "	74	93.80				93.80					
Hodgson Transfer Co.	75	1.24				1.24					
" " "	75	1.85				1.85					
Depreciation of owner's equipment per contract		40.00					Compressor		25.00		
							Jackhammer		5.00		
							Dump Truck		10.00		
		2,363.22	915.00	404.00	425.34	362.88		100.00	40.00	66.00	50.00

SMITH and RUGG
TWEA - 2296
CONTRACT - E278

PAYROLL - July, 1952

	1st Period (dates) / 2nd Period	1	2	3	4	5	6	7	8	9	10	11	12	13	14	15		TOTAL HOURS Reg.	TOTAL HOURS O.T.	RATES Reg.	RATES O.T.	GROSS WAGES	Soc.Sec. Tax	W.H. Tax	NET PAID
		16	17	18	19	20	21	22	23	24	25	26	27	28	29	30	31								
Rugg, Charles R. 521-14-9903	1st	8	8	8		8		8	8	8	8	8	8*		8	8		88	8	1.65	2.475	$165.00			165.00
Miner	2nd	8	8	8	8*		8	8	8	8	8	8*		8	8	8	8	96	16	1.65	2.475	198.00			198.00
Smith, Michael R. 523-40-7790	1st	8	8	8		8		8	8	8	8	8	8*		8	8		88	8	1.50	2.25	150.00	2.25	24.40	123.35
Hoistman	2nd	8	8	8	8*		8	8	8	8	8	8*		8	8	8	8	96	16	1.50	2.25	180.00	2.70	30.80	146.50
Gonzales, Anthony 522-07-9692	1st	8	8	8		8		8	8	8	8	8	8*		8	8		88	8	1.50	2.25	150.00	2.25	7.80	139.95
Mucker	2nd	8																8		1.50		12.00	.18	.82	11.00
Rugg, Merle	1st											8		8	8	8	8	40		1.50		60.00	.90	10.50	48.60
Mucker	2nd																								
Smith, Joseph M. 522-07-9589	1st	8	8	8		8		8	8		8	8	8		8	8		88		2.00		176.00			176.00
Supervisor	2nd	8	8	8	8*		4	8	8	8	8	8*		8	8	8	8	96	12	2.00	3.00	228.00			228.00
																	TOTALS					$1,319.00	$8.28	$74.32	$1,236.40

Certified to be a true transcript of subject payroll for July, 1952

* Overtime or part overtime

A W Schow Opa

Mining Division
Region IV

August 26, 1952

Memorandum

To: T. A. Christensen

From: Acting Chief, Mining Division, Region IV

Subject: DMEA Docket 2296, Contract Idm-E278 (Tungsten), Joseph M. Smith and Charles R. Rugg, a partnership, Boulder County, Colorado - Operator's Monthly Progress Report for the period of July 1952

Enclosed are the original and four copies of Form MF-104 and MF-104A, Narrative Report, and Engineer's Report for the above period.

Work accomplished is in accordance with the contract and payment is recommended for the amount of $1,772.41, which is 75 percent of the total of $2,363.22.

Remarks:-- $13.91 of the amount of $362.88 reported under item "(3) Miscellaneous" should have been reported under item "(7) Repairs to Equipment".

Reference Form MF-104A, Underground rehabilitation will be deleted from other operational work and properly recorded on the next report.

for John T. Shaw
W. H. King

Enclosures

JWT:jp
cc Secretary to the Operating Committee (2)
WMTraver
Subject
Chron
AHKoschmann (2)

UNITED STATES
DEPARTMENT OF THE INTERIOR
BUREAU OF MINES

Region IV

Room 137, Building 20
Denver Federal Center
Denver 14, Colorado
August 18, 1952

Memorandum

To: Executive Officer, Field Team, Region IV

From: Chief, Colorado Branch, Mining Division, Region IV

Subject: DMEA 2296 (Tungsten), Contract Idm-R278, Smith and Rugg, Rambler mine, Boulder County, Colorado - Progress report for July 1952

Please find enclosed five copies of the above progress report, forms MF-104 (revised) and MF-104A, with payroll, narrative, cost summary distribution, and one certified copy only of invoices, and seven copies of R. L. Bolmer's memorandum report covering inspection of the underground progress and accounts.

Despite instructions from this office and yours to Smith that we considered an amendment unnecessary for prospect drilling, he reports it as such in his narrative. However, no attempt has been made to segregate the operation in the cost accounting and we are assuming it will be considered as a reasonable cost of crosscutting by all concerned.

Payment of $1,772.41, or 75 percent of the total $2,363.22 claimed by the contractor, is approved.

W. M. Traver, Jr.

W. M. Traver, Jr.

enclosures

WMT/amh

cc 4
AHKoschmann
R278
DMEA Charon.

UNITED STATES
DEPARTMENT OF THE INTERIOR
BUREAU OF MINES

Region IV

Room 137, Building 20
Denver Federal Center
Denver 14, Colorado
August 18, 1952

Memorandum

To: Chief, Colorado Branch, Mining Division, Region IV

From: R. L. Bolmer

Subject: DMEA 2296 (Tungsten), Contract Idm-8278, Smith and Rugg, Rambler mine, Boulder County, Colorado - Progress report for July 1952

Progress under the subject contract was inspected August 13, 1952, with Messrs. Smith and Rugg. The progress as reported in Smith's narrative is correct and complete. As stated in the narrative, the southwest drift is being continued. On the date of the inspection, this drift had been advanced an additional 30 feet. At 88 feet from the shaft, it cut a narrow quartz vein, striking S. 50° W., and dipping 85° northwest. This vein widened and began showing ferberite as it was opened to the southwest. At 115 feet from the shaft it had widened to a 5-inch quartz vein containing from 1/4 to 1 inch of ferberite. The wall rock at this location is a soft granite and pegmatite.

The work performed this period, for which claim is made, is in conformance with the contract and is as reported on form MF-104A. It is noted that the raise was measured from the track level. More correctly, this should have been measured from the back of the drift and reported as 34 feet rather than 41 feet. Crosscutting reported should also be reduced by 3 feet under similar reasoning that the heading started from the side of the drift instead of from the center line. The operator's accountant apparently misinterpreted instructions regarding distribution of $917.85 for underground rehabilitation. Last month, he incorrectly listed this amount under Item 7, form MF-104, but correctly distributed it on form MF-104A. This month, the amount is distributed correctly on form MF-104 but has been incorrectly included with drifting and sinking on form MF-104A. I will endeavor to contact the accountant and explain this distribution to him so the next report will be correct.

The supply and service charges claimed on form MF-104 are considered necessary and do not appear excessive. All charges on form MF-104 are supported by the proper documentation except the June payment for Workmen's Compensation. I am accepting the explanation given on this claim of $66.00 and approve its payment. It will adjust itself on next month's report.

Project costs this period are approved in the amount of $2,363.22. Payment of 75 percent of this amount, or $1,772.41, is recommended.

R. L. Bolmer

R. L. Bolmer
Mining Engineer

RLB/amh

cc 6
AHKoschmann
E278
DMEA Chron.

SMITH & RUGG
DMEA - 2296
CONTRACT - E 278
July - 1952

NARRATIVE REPORT

1. DRIFT SOUTHWEST
Advanced 23 feet making a total of 85 feet from shaft, very poor showing of vein material at this point but will encounter junction with vein in foot wall at about 100 feet from shaft. Granite with some pegmatite. Will continue driving this drift.

2. DRIFT NORTHEAST
Advanced 20 feet making a total of 60 feet from shaft. Vein broken up. Altered granite with iron seams. Work stopped here for present.

3. RAISE
Raise started 36 feet northeast of shaft and advanced 41 feet above track. Small streak of good ferberite showing in upper 12 feet of southwest end of raise. No ore showing in back so work stopped for present. Altered granite.

4. CROSS CUT
Started at a point 43 feet southwest from end of shaft and advanced 21 feet from center of track in southwest drift. Small vein showing at about 15 feet. Light granite formation. Work stopped here.

5. PROSPECT DRILLING
Six holes averaging 30 feet each drilled horizontally in both walls at various points shown on sketch. No ferberite recognized in drill cuttings. Very favorable altered granite all the way in hole #1. Hole making water.

6. OPERATING CREW
Total of four (4) men employed most of the time during month. Operating six days weekly.

7. WATER
Approximately 18,000 gallons water pumped each 24 hours by one pump operating about 4½ hours daily.

8. No unusual difficulties encountered.

SMITH & RUGG

By Joseph M. Smith

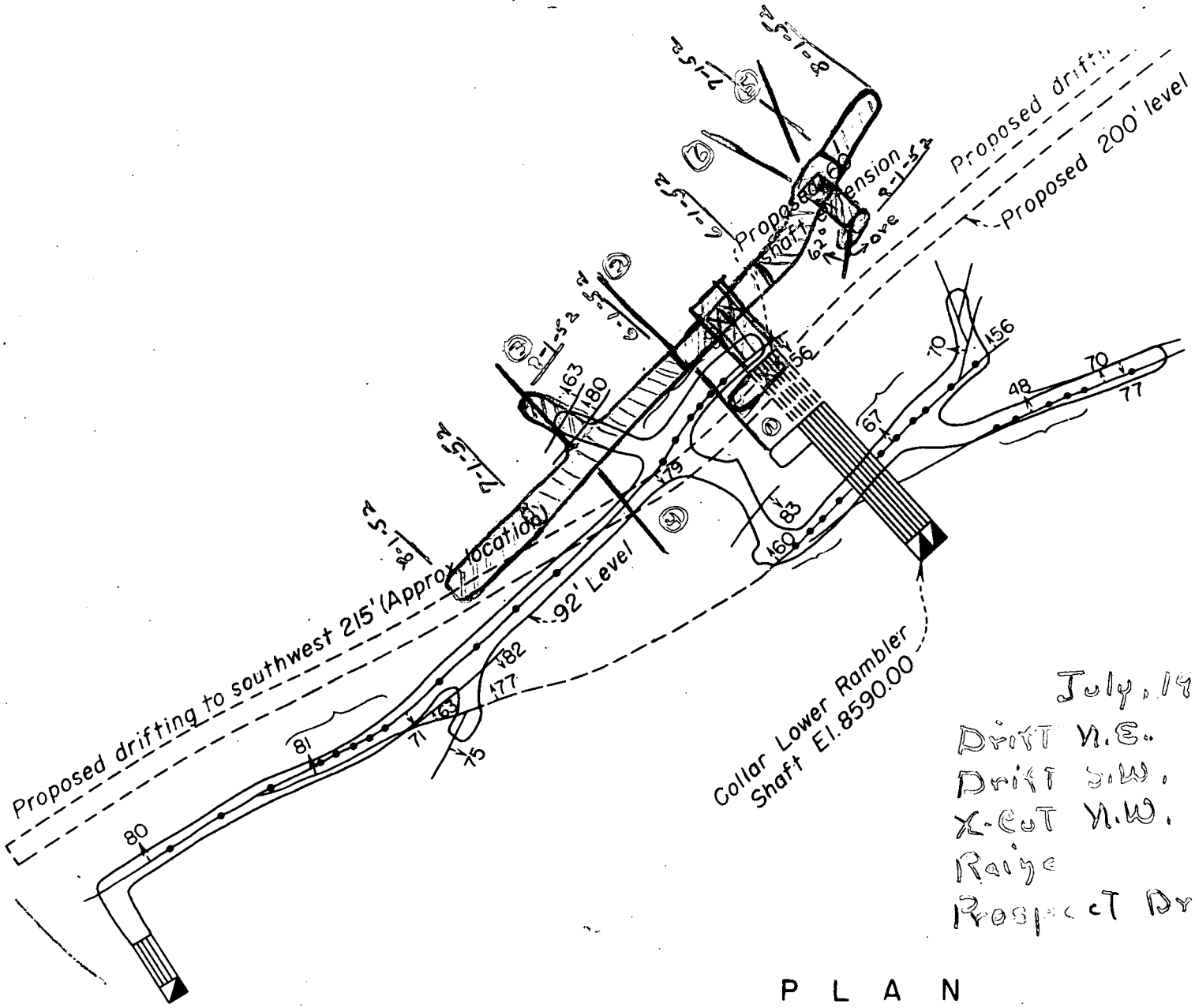

P L A N

(SHOWING PRESENT WORKINGS & PROPOSED EXPLORATION)

30 0 30 60 90

SCALE OF FEET

Form MF-104 (Rev.)
(April 1952)

UNITED STATES
DEPARTMENT OF THE INTERIOR
DEFENSE MINERALS EXPLORATION ADMINISTRATION

Budget Bureau No. 42-R1036.3.
Approval expires 6-30-53.

AUG 18 1952

OPERATOR'S MONTHLY REPORT AND VOUCHER

Month of June, 1952 Docket No. DMEA 2296 Contract No. E - 278

Operator's Name Joseph M. Smith and Charles R. Rugg Minerals Tungsten

Address P.O. Box 354 - Nederland, Colorado

Contract Amount, $ 24,400.00 Government Participation: 75 % Amount, $18,300.00

ITEMS OF COSTS	FOR OPERATOR'S USE			FOR GOVERNMENT USE ONLY		
	Monthly Total	Totals Previously Reported	Totals To Date	Approved Monthly Total	Approved Totals Previously Reported	Approved Totals To Date
(1) Independent / Short Form Contracts:						
Drilling						
Bulldozing						
Crosscutting						
Drifting						
(2) Labor and Supervision:						
Labor	692.40	966.90	1,659.30			
Supervision	432.00	572.00	1,004.00			
Technical Services						
(3) Operating Mat'ls. and Supplies:						
Timber	56.33		56.33			
Explosives	6.12	357.40	363.52			
Pipe	34.04	140.13	174.17			
Track	68.06	3.31	71.37			
Miscellaneous	388.19	218.27	606.46			
(4) Operating Equipment:						
Rental	100.00	225.00	325.00			
Purchase Jackhammer leg	198.90		198.90			
Depreciation	40.00	70.00	110.00			
(5) Initial Rehabilitation and Repairs	31.60	6.04	37.64			
(6) New Bldgs., Improvements, etc.						
(7) Miscellaneous:						
Repairs to Equipment	16.39	40.79	57.18			
Sampling and Analysis						
Payroll Taxes	16.27		16.27			
Liability Insurance		187.00	187.00			
Bookkeeping	50.00	50.00	100.00			
(8) Contingencies (specify):						
Unwater & rehabilitate shaft		917.85	917.85			
TOTALS	$2130.30	$ 3754.69	$ 5884.99	2,130.30	3,754.69	5,884.99

I certify that the above bill is correct and just and that payment therefor has not been received.

Date 7-16-52 *Payee SMITH & RUGG

Per Joseph M. Smith Title Partner

*When a voucher is signed or receipted in the name of a company or corporation, the name of the person writing the company or corporate name, as well as the capacity in which he signs, must appear. For example: "John Doe Company, per John Smith, Secretary," or "Treasurer," as the case may be.

NOTE.—Title 18, U. S. Code (Crimes), section 1001, makes it a criminal offense to make a willfully false statement or representation to any department or agency of the United States as to any matter within its jurisdiction.

(Instructions on reverse)

Pursuant to authority vested in me, I certify that this account is correct and proper for payment in the amount of:

$ 1597.72

Signature [illegible]
(Authorized Certifying Officer)

Date 8/8/52 Vou. No. DMM 53-19
(See other side)

(For Government use only)

CERTIFICATION BY GOVERNMENT REPRESENTATIVE:

I certify that to the best of my knowledge and belief the contractor submitting this voucher is operating a Defense Minerals Exploration Administration project under Contract No. Idm-E278 in accordance with the terms of the contract.

Signature Robert L. Bolmer Title Mining Engineer Date July 18, 1952

$1597.72

APPROVAL BY DMEA EXECUTIVE OFFICER OR ALTERNATE

Signature ..... Title ..... Date .....

MONTHLY REPORT OF OPERATOR

The Operator (Contractor) of an exploration project is required to make a monthly report to the Government through the Regional Executive Officer. This report consists of three parts as follows:

(a) *Form MF-104—Operator's Monthly Report and Voucher.*—This form details expenditures and constitutes a voucher for reimbursing the Operator for the Government's share of costs;

(b) *Form MF-104A—Operator's Unit Cost and Progress Report.*—This is a statistical report of expenditures which shows costs for the various types of operation; and

(c) *Narrative.*—A concise narrative description of progress made, results accomplished, and any unusual difficulties encountered must be furnished as an attachment to this Report and Voucher. Wherever possible, the narrative is to be illustrated with maps or sketches showing formations penetrated and location and assays of samples taken as well as advances in workings. In the case of diamond drilling or churn drilling, the location and inclination of holes is to be shown on a map; logs and assays also are to be submitted.

The Monthly Report of Operator should be prepared in an original and four copies all of which must be sent to the Executive Officer of the Region not later than the 15th of the month following.

Preparation of Form MF-104—Operator's Monthly Report and Voucher.—All the applicable spaces in Form MF-104 should be filled in by the Operator, and the Operator or his agent should sign the certification in the lower left corner of the form.

The items of costs are arranged in the order they appear in Article 6 (a) of Form MF-200 (Revised February 1952), however, this form is readily adaptable for use in reporting activities under other contract forms.

Under Item (1) delete words "Short Form" if the contract is a sub-contract under Form MF-200; and delete word "Independent" if the contract reported is on Form MF-200 (A). Also, report work paid for on a unit basis under contract Form MF-200 as though it were performed under an independent contract.

Under Item (2) include labor, supervision and technical services incurred for the exploratory operations. Do not include labor, supervision and technical services used for work performed under items (5) and (6).

Under Item (3) include the costs of material and supplies used in the project other than that used under items (5) and (6).

Under Item (4) appear the three types of operating equipment expenditures, that is, rental, purchase and depreciation. The expenditures made for renting equipment belonging to a third party will be reported under "Rental". The amount paid or duly obligated for payment for the purchase of equipment will be reported under "Purchase". The amount of expenditures due the Operator to reimburse him for depreciation of equipment owned will be reported under "Depreciation".

Item (5) comprises costs of labor, supervision, technical services, materials, etc., which are used in the initial rehabilitation and repair of existing buildings, installations, fixtures, and equipment. These costs, therefore, should not be reported under items (2) and (3).

Item (6) includes the labor, supervision, technical services, materials, etc., used in the installation or construction of new buildings, fixed improvements, etc., necessary for the project. These costs, therefore, should not be reported under items (2) and (3).

Item (7) covers miscellaneous types of expenditure such as payroll taxes, liability insurance, workmen's compensation insurance, repairs to equipment and sampling and analysis. Only that part of payroll taxes, liability insurance and workmen's compensation which are paid by the operator should be reported under item (7). The share paid by the employee as a payroll deduction is to be included under item (2) as labor costs.

Item (8) includes any unforeseen costs not included in the other seven categories.

The original of Form MF-104 when submitted for reimbursable expenses incurred under contract Form MF-200 must be supported by original documentation or by certified copies of purchase orders, payrolls or transcripts of payrolls, unless such documentation has been waived by the Regional Executive Officer. This certification may be stated thus, "Certified True Copy (or Transcript)", followed by appropriate signature. If the Executive Officer of the Region determines that a contract under Form MF-200 should have an "on-site" audit, that is, a Government auditor should make an audit of the Operator's books and records of account, the Operator need not support his monthly voucher with original or certified documents except in cases of equipment purchases whose individual costs exceed $50.00. In these cases the original or a certified copy of the purchase order or invoice should be attached to the Monthly Voucher. N. B.—Only the *original* of Form MF-104 is required to be documented. The four copies of Form MF-104 are not to be thus supported.

Form MF-104 submitted for reimbursement under fixed price contracts on Form MF-200 (A), however, are not required to be supported by documentation of any kind. The Operator will submit his claim under item (1) of Form MF-104 by deleting as stated above the word "Independent" and by showing the number of feet or other units immediately after the appropriate descriptive word, such as, drilling, bulldozing, crosscutting, drifting, etc., and giving the "Monthly Total" amount due. "Totals Previously Reported", and "Totals to Date" columns should also be filled in.

U. S. GOVERNMENT PRINTING OFFICE 205675

Form MF-104A
(April 1952)

Budget Bureau No. 42-R1151
Approval expires 6-30-53.

DEPARTMENT OF THE INTERIOR
Defense Minerals Administration
AUG 18 1952

UNITED STATES
DEPARTMENT OF THE INTERIOR

DEFENSE MINERALS EXPLORATION ADMINISTRATION

OPERATOR'S UNIT COST AND PROGRESS REPORT

Month of June 1952 Docket No. DMEA 2296 Contract No. B - 278
Operator's Name Joseph M. Smith & Charles R. Rugg Minerals Tungsten
Address P.O. Box 354 - Nederland, Colorado

OPERATION	UNIT	COSTS THIS MONTH	UNITS THIS MONTH	COSTS TO DATE	UNITS TO DATE	UNIT COSTS TO DATE	AUTHORIZED BY CONTRACT Units	AUTHORIZED BY CONTRACT Unit Costs
Drifting	feet	$1690.82	70	$ 1,944.66	102	$19.06	515	
Crosscutting	feet						125	
Raising								
Shafts	feet	208.98		2,785.94	35	79.59	60	
Winzes								
Drilling: Core								
Churn								
Auger								
Stripping								
Trenching								
Test Pits								
Roads and Trails								
Unwater & Rehabilitate shaft				917.85				
TOTAL DISTRIBUTED COSTS		$1899.80		$ 5,648.45				TOTAL COSTS AUTHORIZED BY CONTRACT
Operating Equipment Purchased		198.90		198.90				305.00
Initial Rehabilitation and Repairs		31.60		37.64				250.00
New Buildings, Improvements, etc.								
TOTAL COSTS		$2130.30		$5,884.99				$24,400.00

The undersigned company, and the official executing this certification on its behalf, hereby certify that the information contained in this report is correct and complete to the best of their knowledge and belief.

Date 7-16-52 Operator SMITH & RUGG

Per Joseph M Smith Title Partner

NOTE.—Title 18, U. S. Code (Crimes), section 1001, makes it a criminal offense to make a willfully false statement or representation to any department or agency of the United States as to any matter within its jurisdiction.

REMARKS:

(Instructions on reverse)

(For Government use only)

INSTRUCTIONS

Preparation of Form MF–104A—Operator's Unit Cost and Progress Report.—Applicable places on Form 104A should be filled in by the Operator. The purpose of this form is twofold as follows: (1) to furnish the supervising engineers and other administrators with statistical information necessary to better determine the progress of the project; and (2) to furnish more permanent information on mining costs for future use. The more important phases of operation on which permanent information is desired have been outlined in the form. There are blank lines, however, for those unusual phases which may need to be reported for a particular project. It will be necessary for the Operator to distribute his costs among the applicable phases reported with the exception of three items the costs of which are not to be distributed by the Operator. These three items are: "Operating Equipment Purchased", "Initial Rehabilitation and Repairs", and "New Buildings, Improvements, etc." The reason for not distributing these items on a monthly basis is doubtless clear to the Operator, since such distribution might well overstate the cost for any one month or period short of the entire contract period.

Form MF–104A has been designed to tie in with Form MF–104 for both monthly and cumulative costs. The "Total Costs" on Form MF–104A for each month should equal the monthly "Total Costs" as reported on Form MF–104. This is also true of the "Total Costs To Date".

In preparing Form MF–104A, it will be necessary frequently to distribute certain costs over a number of items. For instance, supervisory and engineering costs may have to be distributed over several phases, such as, drifting, crosscutting, raising, etc., provided that these items were reported active for the month. Such distributions should be made on the basis of time spent on the various phases, on man days of labor charged to such phases, or on some other equitable basis. "Operating Equipment", "Initial Rehabilitation and Repairs", and "New Buildings Improvements, etc.", will be distributed to the several phases of the project by the Washington Office of DMEA at the close of the project if determined necessary. The last two columns headed "Authorized by Contract" will be filled in by the Operator if such information is found in the contract. This information is usually a part of Exhibit "A" of the contract. A space for remarks has been provided for the use of the Operator to call attention to any unusual circumstances causing excessive or disproportionate unit costs.

U. S. GOVERNMENT PRINTING OFFICE 205676

SMITH & RUGG
DMEA - 2296
CONTRACT E278

EXPENSE SUMMARY

June, 1952

INVO. DATE	VENDOR	TOTAL AMOUNT	(2) LABOR & SUPERV. Labor	Superv.	(3) OPERATING SUPPLIES Timber	Expl.	Pipe	Track	Misc.	(4) OPERATING EQUIPMENT Descript.	Rental	Purch.	Depr.	(5) INITIAL REHABIL.	(7) MISCELLANEOUS Reprs.	Taxes	Bkkpg.
6-30	Payroll Summary Attached	1124.40	692.40	432.00													
6-30	Howard Knoll	95.00					30.00	65.00									
6-1[illegible]	Caribou Timber, Inc.	56.33			56.33												
6-3[illegible]	Wilkins & Schone	50.00															50.00
6-30	Valentine Hardware Co.	31.83					4.04		27.79								
6-24	Boise-Payette Lumber Co.	31.60												31.60			
6-30	Industrial Engineering Supply	100.00								Pump	25.00						
										Generator	75.00						
6-9	Industrial Engineering Sup.	244.80				6.12		3.06	235.62								
6-28	Boulder Tire & Battery	16.39													16.39		
6-23	Union Supply Company	26.01							26.01								
6-30	Union Supply Company	198.90								Jackhammer leg		198.90					
6-2	C & K Oil Company	98.77							98.77								
	Depreciation of owner's Equipment per contract	40.00								Compressor			25.00				
										Jackhammer			5.00				
										Dump truck			10.00				
6-30	Payroll taxes for April, May and June per payroll summaries submitted - Employer's portion	16.27														16.27	
	TOTALS	$2130.30	692.40	432.00	56.33	6.12	34.04	68.06	388.19		100.00	198.90	40.00	31.60	16.39	16.27	50.00

SMITH and RUGG
DMEA - 2296
CONTRACT E-278

PAYROLL - JUNE, 1952

	1st Period: (Dates) 2nd Period:	1	2	3	4	5	6	7	8	9	10	11	12	13	14	15	TOTAL HOURS Reg.	TOTAL HOURS O.T.	RATES Reg.	RATES O.T.	GROSS WAGES	SOC. SEC. TAX	W.H.T. TAX	NET PAID
		16	17	18	19	20	21	22	23	24	25	26	27	28	29	30								
Rugg, Charles R. 521-14-9903	1st		8	8	8	8	8	8*		8	8	8	8	8	8*		80	16	$1.65	$2.475	$ 171.60			$ 171.60
Miner	2nd	8	8	8	8	8	8*		8	8	8	8	8	8*		8	88	16	1.65	2.475	184.80			184.80
Smith, Micheal B. 523-40-7790	1st		8	8	8	8	8	8*		8	8	8	8	8	8*		80	16	1.50	2.25	156.00	$ 2.34	$26.00	127.66
Hoistman	2nd	8	8	8	8	8	8*		8	8	8	8	8	8*		8	88	16	1.50	2.25	168.00	2.52	28.40	137.08
Gonsales, Anthony 522-07-9692	1st																							
Mucker	2nd															8	8		1.50		12.00	.18	.82	11.00
Smith, Joseph M. 522-07-9589	1st		8	8	8	8	8	8*		8	8	8	8	8	8*		80	16	2.00	3.00	208.00			208.00
Supervisor	2nd	8	8	8	8	8	8*		8	8	8	8	8	8*		8	88	16	2.00	3.00	224.00			224.00
	TOTALS																512	96			$1,124.40	$ 5.04	$55.22	$1,064.14

* Overtime

Certified to be a true copy of SMITH and RUGG payroll for June, 1952

By A.W. Schone Accountant

SMITH and RUGG
CONTRACT Idm - E-278
DMEA - 2296
JUNE, 1952

NARRATIVE REPORT

1. SHAFT STATION
   Timbering of station and sump completed.

2. DRIFT SOUTH-WEST
   Advanced 50 feet making a total of 62 feet from shaft. No ore encountered as yet and only small gouge streak showing. Granite formation.

3. DRIFT NORTH-EAST
   Advanced 28 feet making a total of 40 feet from shaft. Quartz with small seams of ferberite encountered at from 30 feet to 40 feet from shaft. Ore not worth saving. Vein making water. Iron streak bearing N 20 degrees W crosses vein where ore is showing.

4. OPERATING CREW
   Total crew comprises one hoistman and two men underground.
   One additional man employed as mucker for one day.
   Operating six days weekly.

5. WATER
   Water flow has decreased to approximately 1[illegible],000 gallons per 24 hours and being removed with one pump on station at bottom.

6. No unusual difficulties encountered. Only delays were a few missed holes in wet drifts.

SMITH and RUGG

By Joseph M Smith

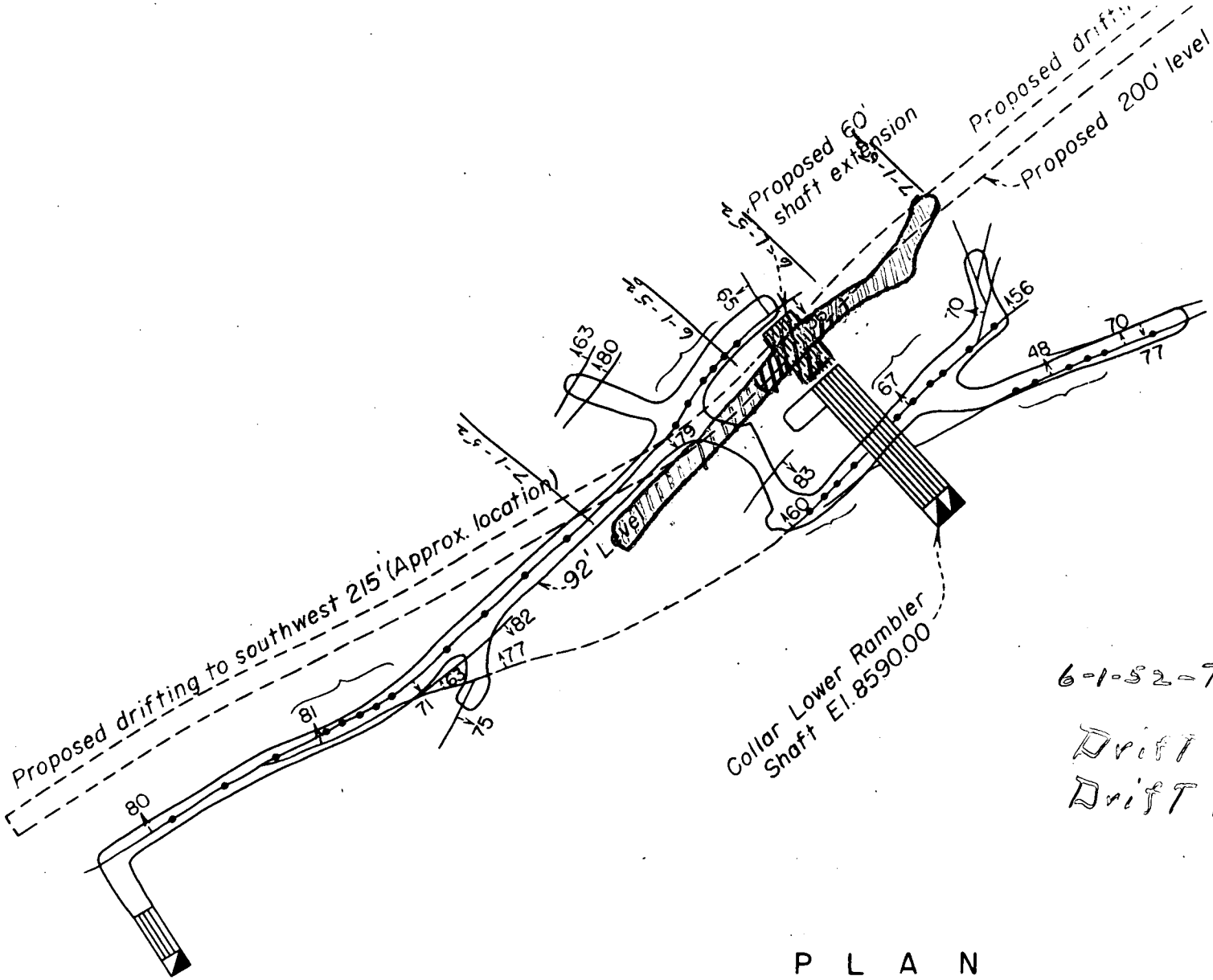

6-1-52 - To 7-1-52

Drift S.W. 12' To 62'
Drift N.E. 12' To 40'

P L A N

(SHOWING PRESENT WORKINGS & PROPOSED EXPLORATION)

30 0 30 60 90

SCALE OF FEET

224 New Customhouse
Denver 2, Colorado

July 28, 1952

Memorandum

To: T. A. Christensen

From: Acting Chief, Mining Division, Region IV

Subject: DMEA Docket 2296, Contract Idm-E278 (Tungsten), Smith and Rugg, Rambler Mine, Boulder County, Colorado - Operator's Monthly Progress Report for the period of June 1952

Enclosed are the original and four copies of Form MF-104, Narrative Report, and Engineer's Report for the above period.

Work accomplished is in accordance with the contract and payment is recommended for the amount of $1,597.72, which is 75 percent of the total of $2,130.30.

As noted by the examining engineer, the amount of $917.85 erroneously entered on Form MF-104 will be corrected on the next Monthly Report.

Actually, carbide should not be included after "explosives".

W. H. King

W. H. King

Enclosures

WLD:jp
Subj
Secretary to the Operating Committee (2)
WMTraver
AHKoschmann (2)
Chron

UNITED STATES
DEPARTMENT OF THE INTERIOR
BUREAU OF MINES

Region IV

Building 20, Room 137
Denver Federal Center
Denver 14, Colorado
July 23, 1952

Memorandum

To: Executive Officer, Field Team, Region IV

From: Chief, Colorado Branch, Mining Division, Region IV

Subject: DMEA 2296 (Tungsten), Contract Idm-E278, Smith and Rugg, Rambler mine, Boulder County, Colorado - Progress report for June 1952

Please find enclosed five copies of the above progress report for June 1952, on the new form MF-104 (revised) and MF-104A, and seven copies of R. L. Bolmer's memorandum report covering inspection of the underground progress and accounts.

Notation is made of an erroneous entry on the MF-104 forms of $917.85 carried forward from previous reports. It hardly seems necessary to have returned these forms to the contractor for correction. He has, however, been notified and will prepare the July report correctly.

Payment of $1,597.72, or 75 percent of the amount $2,130.30 claimed by the contractor, is approved.

W. M. Traver, Jr.

W. M. Traver, Jr.

enclosures

WMT/amh

cc 4
AHKoschmann
E278
DMEA Chron.

UNITED STATES
DEPARTMENT OF THE INTERIOR
BUREAU OF MINES

Region IV

Building 20
Denver Federal Center
Denver 14, Colorado
July 21, 1952

Memorandum

To: Chief, Colorado Branch, Mining Division, Region IV

From: R. L. Bolmer

Subject: DMEA 2296 (Tungsten), Contract Idm-E278, Smith and Rugg, Rambler mine, Boulder County, Colorado - Progress report for June 1952

Progress under the subject contract was inspected July 14, 1952, with Messrs. Smith and Rugg. Progress as reported in Smith's narrative is correct and complete.

The vein structure, on which the shaft was deepened and upon which both the southwest and northeast drifts were begun, flattens and weakens with depth. Little, if any, of this structure now can be observed in the breast of either drift. If drifting in either direction is to be continued, a stronger vein must be uncovered. The operators were instructed to crosscut a short distance into both the foot and hanging walls of the southwest drift in an attempt to pick up a more favorable structure on which to continue drifting. The Geological Survey has been asked to examine the work completed under the contract and to recommend the action to be taken if crosstutting fails to disclose a stronger vein.

In his narrative, Smith mentions a small showing of ferberite 30 feet northeast of the shaft. His request for a contract amendment to permit raising a short distance on this showing has been recommended.

The work performed this period, for which claim is made, is in conformance with the contract and is as reported on Form MF-104A. To date, the contractors have performed the prescribed work efficiently and in a manner generally considered as good mining practice.

The supply and service charges claimed in Form MF-104 are considered necessary and do not appear excessive. All charges on Form MF-104 are supported by certified copies of the project payroll or vendor's invoices.

It is noted on Form MF-104 that $917.85 previously reported has been distributed on this new form under Item 8, Contingencies, and designated, "Unwater and Rehabilitate Shaft". This is in error. This amount properly should have been distributed under the applicable items 2 to 7. As this does not affect the amount claimed in June, the operators are being instructed to correctly redistribute the amount on their July claim.

Project costs incurred during this period are approved in the amount of $2,130.30. Payment of 75 percent of this amount, or $1,597.72, is recommended.

R. L. Bolmer

R. L. Bolmer
Mining Engineer

RLB/bam

cc: 6
AHKoschmann
E278
DMEA Chron.

MF-104
(August 1951)

Budget Bureau No. 42-R1036.2.
Approval Expires 6-30-52.

UNITED STATES
DEPARTMENT OF THE INTERIOR
DEFENSE MINERALS ADMINISTRATION

Contract No.
Idm-E 278

Name of Operator Joseph M. Smith and Charles E. Rugg
Docket No. DMA 2296
Total Contract Amount $ 24,400
Government Participation: 75 % Amount, $ 18,300
Distribution of Expenditures for Month of May, 1952

PREPARED
CHECKED
TYPE

STRATEGIC AND CRITICAL MINERAL EXPLORATION PROGRAM
OPERATOR'S MONTHLY PROGRESS REPORT

Operators are to submit monthly reports to the designated field representative of the Defense Minerals Administration. Reports are to be submitted in quadruplicate prior to the 15th day of the month following the reporting period.

Narrative.—A concise narrative description of progress made, results accomplished, and any unusual difficulties encountered is to be furnished.

Maps.—Wherever possible, the narrative is to be illustrated with maps or sketches showing formations penetrated and location and assays of samples taken as well as advances in workings. In the case of diamond drilling or churn drilling, the location and inclination of holes is to be shown on a map; logs and assays also are to be submitted.

Cost Accounts.—All applicable parts of this form are to be filled in. This report will form the basis for payments of the Government's participating share of expenses. Audits of accounts may be made from time to time.

DEPARTMENT OF THE INTERIOR
Defense Minerals Administration
RECEIVED
JUL 17 1952

CERTIFICATION

The undersigned company, and the official executing this certification on its behalf, hereby certify that the information contained in this report is correct and complete to the best of their knowledge and belief.

Joseph M. Smith and Charles E. Rugg
(Name of Company)

By Joseph M. Smith
(Signature of Authorized Official)

June 12 1952
(Date)

Partner
(Title)

NOTE.—Title 18, U. S. Code (Crimes), section 1001, makes it a criminal offense to make a willfully false statement or representation to any department or agency of the United States as to any matter within its jurisdiction.

16—64068-3

MONTHLY SUMMARY COST STATEMENT

List as Shown on Exhibits Attached to Contract

Item	Monthly Total	Totals Previously Reported	Totals to Date	For Government Use Only		
				Approved Monthly Total	Approved Totals Previously Reported	Approved Totals To Date
1. Fixtures and Improvements:						
(a) Facilities						
(b) Buildings						
(c) Fixtures						
2. Operating Equipment:						
(a) Purchased[1]						
(b) Rented[2]						
Diesel Generator	75.00	56.25	131.25	75.00	56.25	131.25
Pump (18 in.)	43.75		43.75	43.75		43.75
Pump	25.00		25.00	25.00		25.00
Pump	25.00		25.00	25.00		25.00
(c) Furnished by operator						
Compressor	25.00	18.75	43.75	25.00	18.75	43.75
Jackhammer	5.00	3.75	8.75	5.00	3.75	8.75
Pump Truck	10.00	7.50	17.50	10.00	7.50	17.50
3. Rehabilitation and Repairs:						
(a) Facilities	6.00		6.00	6.00		6.00
(b) Buildings						
(c) Installations						

Mining Division
Region IV

July 1, 1952

Memorandum

To: T. A. Christensen

From: Acting Chief, Mining Division, Region IV

Subject: DMA Docket 2296, Contract Idm-E278 (Tungsten) Smith and Rugg, Rambler Mine - Operator's Monthly Progress Report for the period of May, 1952

Enclosed are the original and four copies of Form MF-104, Narrative Report, and Engineer's Report for the above period.

Work accomplished is in accordance with the contract and payment is recommended for the amount of $1700.03, which is 75 percent of the total of $2,266.71.

Pump rental charges are allowable as the total charge does not exceed that set up by the contract for the period of April 8, 1952 through May 31, 1952.

W. H. King
W. H. King

Enclosures

WHD:oc

cc: Secretary to the Oper. Comm. (2)
Contract
Chron.
Traver
Koschmann (2)

UNITED STATES
DEPARTMENT OF THE INTERIOR
BUREAU OF MINES

Region IV

Building 20, Room 137
Denver Federal Center
Denver 14, Colorado
June 25, 1952

Memorandum

To: Acting Chief, Mining Division, Region IV

From: Chief, Colorado Branch, Mining Division, Region IV

Subject: DMEA 2296, Contract Idm-E278, Smith and Rugg, Rambler mine, Boulder County, Colorado - May 1952 progress report.

Please find enclosed five copies of the subject progress report, form MF-104, with narrative, plan and section showing progress, and payroll summary, along with seven copies of R. L. Bolmer's memorandum covering his inspection of the underground progress and accounts.

Payment of $1,700.03, or 75 percent of the total $2,266.71 claimed by the operator, is approved.

W. M. Traver, Jr.

W. M. Traver, Jr.

enclosures

WMT/amh

cc 4
AHKoschmann
E278
DMEA Chron.

UNITED STATES
DEPARTMENT OF THE INTERIOR
BUREAU OF MINES

Region IV

Building 20, Room 137
Denver Federal Center
Denver 14, Colorado
June 25, 1952

Memorandum

To: Chief, Colorado Branch, Mining Division, Region IV

From: R. L. Bolmer

Subject: DMEA 2296, Contract Idm-E278, Smith and Rugg, Rambler mine, Boulder County, Colorado - May 1952 progress report

Progress under the subject contract was inspected June 16, 1952, with Messrs. Smith and Rugg. During May, the Lower Rambler shaft was sunk 29 feet to a depth of 197 feet. A level station was established at 187 feet and drifting on the vein was started northeast and southwest from the shaft. These drifts were each advanced 12 feet from the shaft in May. On the date of inspection, the southwest had been advanced 47 feet from the shaft and the northeast drift, 19 feet.

The vein exposed in the lower sections of the shaft and in the drifts is not too promising. The operators believe the lower section of the shaft may have been driven on a flatter split off the mineralized vein that was exposed higher in the shaft. Rather than change the shaft too abruptly, they continued sinking on the flat structure. They think the mineralized vein which was followed part way in the shaft, may be now in the footwall of the new level. A hanging wall vein, exposed on the 90-foot level, should intersect the shaft vein at about the elevation of the new level. The operators will crosscut from the southwest drift a maximum of 25 feet into both the foot and hanging walls in an attempt to pick up a better structure on which to drift.

Project accounts were checked at the office of Wilkins and Schone, accountants, Boulder, Colorado.

Item 2, Operating Equipment.

(b) Rented: $75.00 is correct and allowable for a diesel generator. The rental of two pumps is allowed under the contract, one at $30.00 per month and one at $40.00. No charge was claimed last period for pump rental although pumps were in use. To May 31, 1-3/4 months' rental on each of two pumps is allowable. The rental claimed, 1-1/2 months' on one pump and 1 month's rental on each of two others, is equivalent to that allowable under the contract. As sinking has been completed, only one pump will be retained.

Item 2, Operating Equipment.

(c) Furnished by the Operator: The amounts itemized are a month's depreciation at the allowable rate for this equipment.

Item 3, Rehabilitation and Repairs.

(a) Facilities: $6.00 is the cost of minor hardware items for the rehabilitation of the headframe.

Item 4, Labor: $803.70 is the gross wages paid this period per the attached copy of the payroll.

Item 5, Supervision: $476.00 is the gross wage paid for supervision at the rate prescribed in the contract.

Item 6, Supplies.

(b) Explosives: $357.40 is the correct amount paid for 1/2 ton of dynamite, 6,000 feet of fuse, and for blasting caps.

(c) Repair Parts: $3.67 is the cost of a valve spring for the Gardner-Denver compressor.

(d) Other: $321.19 is correct in amount. It consists of miscellaneous supplies received from several jobbers and was substantiated by invoices. Included in the amount was lumber, $66.04; gasoline, oil, diesel fuel, $141.06; printed maps of the Rambler mine, $16.83; and drill steel, bell cord, pipe fittings, small tools, et cetera, $97.26.

Item 9, Insurance.

(c) Workmen's Compensation: $40.00 is the amount paid the State Compensation Fund on the basis of the gross wages earned by employees.

Item 11, Other.

Bookkeeping: $50.00 is the amount charged by Wilkins and Schone for bookkeeping services during May 1952. This amount is allowable under the contract.

The project costs incurred during this period are approved in the amount of $2,266.71. Payment of 75 percent of this amount, or $1,700.03, is recommended.

R. L. Bolmer

R. L. Bolmer, Mining Engineer

RLB/amh

cc 6
AHKoschmann
E278
DMEA Chron.

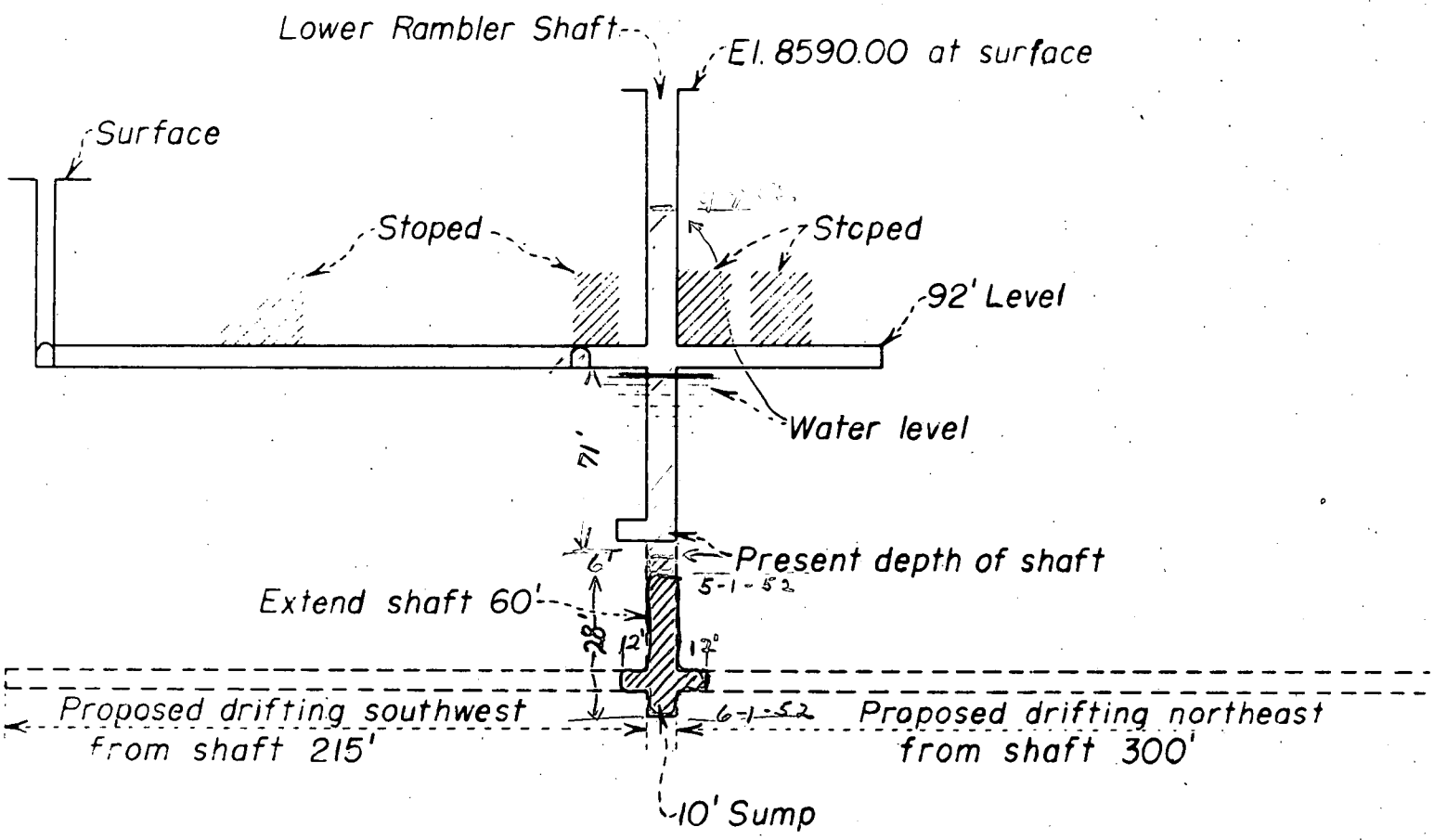

VERTICAL SECTION

SHOWING PRESENT WORKINGS & PROPOSED EXPLORATION
OFF THE LOWER RAMBLER SHAFT

60 0 60 120 180

SCALE OF FEET

4-7-52 To 5-1-52 Unwater 50' To Bottom
Sink 163' To 169'
Rehabilitate 50' To 169'

5-1-52 To 6-1-52 Sink 169' To 197'
Cut station at 187'
Drift S.W. 0' To 12'
Drift N.E. 0' To 12'

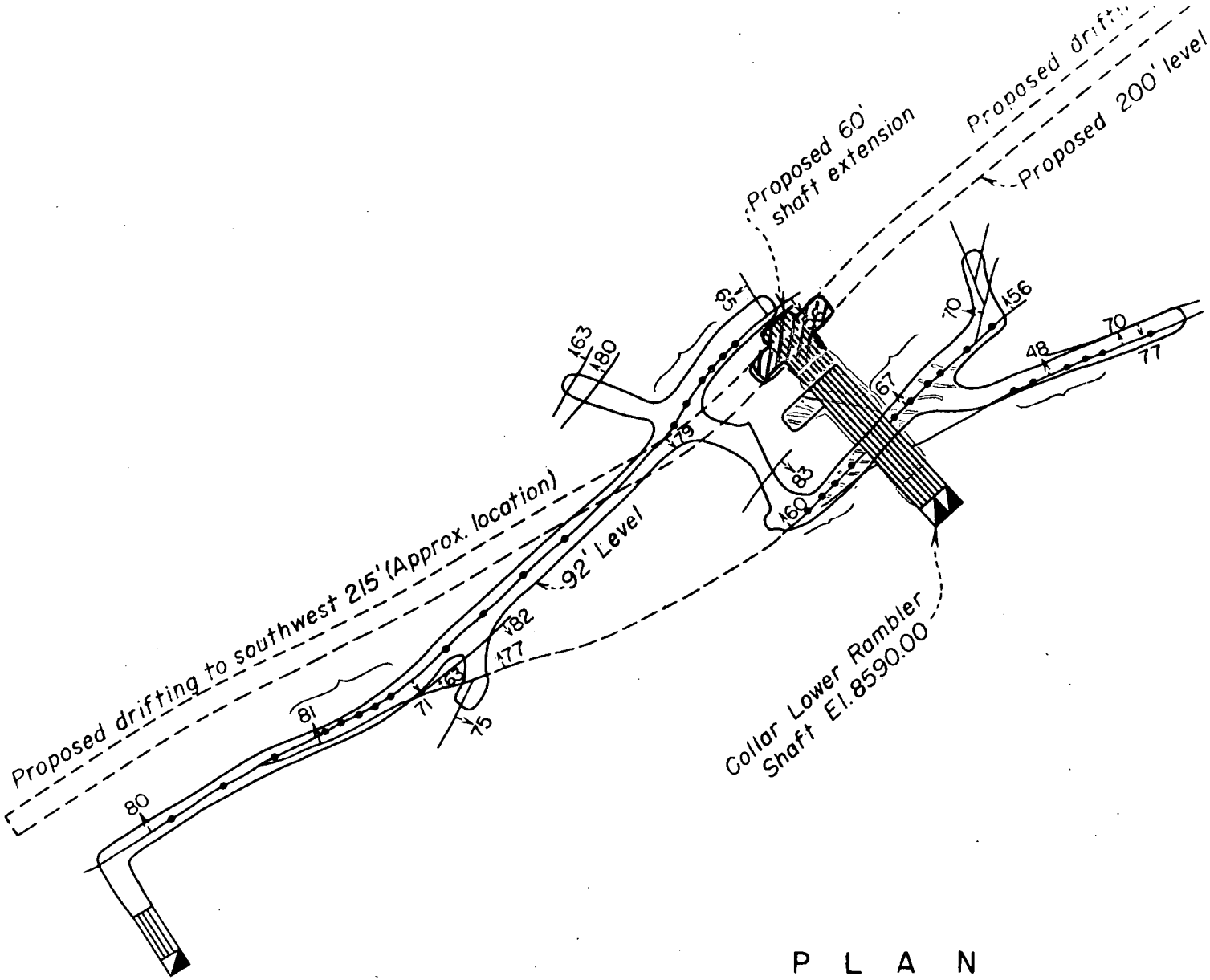

P L A N

(SHOWING PRESENT WORKINGS & PROPOSED EXPLORATION)

30 0 30 60 90

SCALE OF FEET

SMITH and RUGG
Contract Idm - E278
DMA - 2296
May, 1952

NARRATIVE REPORT

1. SHAFT
Sinking continued to 105 feet below 92 foot level, making total depth of 197 feet below collar of shaft.

After discussing formation with Mr. Ogden Tweto, a station was established at 95 feet below the 92 foot level or approximately 187 feet below collar of shaft with a 10 foot sump below station.

Shaft advance this month: 29 feet.
Shaft station with ample working space shot out and timbering underway.

2. DRIFT
Drifts started both ways along vein. Advance 12 feet northeast and 12 feet southwest. Total advance 24 feet.

3. WATER
Water flow has decreased to approximately 35,000 gallons in 24 hours and being removed with one pump on 92 foot level and one sinking pump. Upon completion of station upper pump to be moved to newly established station and water will be handled with one pump.

4. OPERATING CREW DURING MAY
Total crew consisted of two operating partners underground.
One regular hoistman
One alternate hoistman (34 hours)
One mucker (14 hours)

5. No ore showing at present time. Both drifts show granite formation with quartz vein pinched to small gouge streak.

6. No unusual difficulties were encountered.

SMITH and RUGG

By Joseph M. Smith

SMITH and RUGG
Contract Idm - E278
DMA - 2296
May, 1952

PAYROLL SUMMARY

4. LABOR

Name	Soc. Sec. No.	Classification	Rate	Time	Gross Wages	Soc.Sec.	W.H.T.	Net Paid
Rugg, Charles R.	521-14-9903	Miner	$1.65 per hr.	248 hrs.	$ 409.20	none	none	$ 409.20
Langley, John R.	522-28-9447	Hoistman	1.50 per hr.	160 hrs. Reg. $240.00 24 hrs. O.T. 54.00	294.00	$ 4.41	$47.20	242.39
Smith, Michael B.	523-40-7790	Hoistman	1.50 per hr.	53 hrs.	79.50	1.20	13.55	64.75
Hedges, Robert G.	521-38-2437	Mucker	1.50 per hr.	14 hrs.	21.00	.31	3.60	17.09
SUB-TOTAL					$ 803.70	$ 5.92	$64.35	$ 733.43

5. SUPERVISION

Joseph M. Smith	522-07-9589	Supervisor	$2.00 per hr.	238 hrs.	476.00	none	none	476.00
TOTAL					$1,279.70	$ 5.92	$64.35	$1,209.43

MONTHLY SUMMARY COST STATEMENT—Continued

Item	Monthly Total	Totals Previously Reported	Totals to Date	For Government Use Only: Approved Monthly Total	Approved Totals Previously Reported	Approved Totals To Date
(d) Fixtures						
4. Labor[3]	803.70	670.80	1,474.50	803.70	670.80	1,474.50
5. Supervision	476.00	240.00	716.00	476.00	240.00	716.00
6. Supplies						
(a) Timber						
(b) Explosives	357.40		357.40	357.40		357.40
(c) Repair Parts	3.67		3.67	3.67		3.67
(d) Other	321.19	343.93	665.12	321.19	343.93	665.12
7. Power						
8. Transportation						
9. Insurance						
(a) Fire						
(b) Public Liability						
(c) Workmen's Compensation	40.00	147.00	187.00	40.00	147.00	187.00
10. Contract Work						
11. Other (specify)						
Bookkeeping Services	50.00		50.00			
				50.00		50.00
Total	2,266.71	1,487.98	3,754.69	2,266.71	1,487.98	3,754.69
Deletions						
Adjusted totals						
Totals previously reported				1,487.98		
Totals to date				3,754.69		

[1] Enter amount paid during month toward total purchase price.
[2] Payments for rental of equipment or prorated depreciation on equipment owned by contractor.
[3] Submit copy of the Social Security form filed under the Old Age Insurance system showing complete wage and salary data or furnish copy of payroll sheet giving same data.

NOTE.—Indicate that portion of supervisory, office, and engineering salaries that is chargeable to this project.

FOR GOVERNMENT USE ONLY

Checked by
Entered by
Approved by R. L. Bolmer
Amount approved for payment $1,700.03 $1700.03 $1700.03
Remarks

16—64068-3

Schedule DMA 53-5
July 9, 1952
1700.03

EXPLORATION UNIT COST AND PROGRESS REPORT FOR MONTH OF May, 1952

(Supply Data Below Applicable Only to Your Operations)

Item		Costs					Progress [4]				
		Wages [1] and salaries	Equipment [2]	Supplies	Other [3]	Total	Unit	Units this month	Units previously reported	Units to date	Units authorized by contract (Exhibit A)
Drifting	11.2%	143.30	23.38	76.41	10.75	253.84	feet	24	none	24	515
Crosscutting							feet	none	none	none	125
Raising											
Shafts	88.8%	1136.40	185.37	605.85	85.25	2012.87	feet	29	6	35	60
Winzes											
Drill holes											
Overburden											
Rehabilitation and preparation											
Geology and geophysics											
Trenching											
Sampling and assaying											
Roads and trails											
Test pits											
Other (specify)											
Totals		1279.70	208.75	682.26	96.00	2266.71		53	6	59	700

[1] Prorate supervisory, engineering, and office salaries in proportion to man-shifts of direct labor.
[2] Prorate charges for equipment that is not exclusively for one type of job (such as compressors) against authorized units of work in each category.
[3] Where entries in the "Other" column (above) are more than 25 percent of the total expenditures, a breakdown of this item should be made.
[4] Specify whether feet, cubic feet, acres, miles, etc.

16—64068-3 U. S. GOVERNMENT PRINTING OFFICE

MF-104
(August 1951)

Budget Bureau No. 42-R1036.2.
Approval Expires 6-30-52.

UNITED STATES
DEPARTMENT OF THE INTERIOR
DEFENSE MINERALS ADMINISTRATION

Contract No. Idm-E 278

DIST. ENGR.	
EXAMINATION	
DIST. CLERK	
PERSONNEL	
FILES	

Name of Operator Joseph M. Smith and Charles R. Rugg
Docket No. DMA 2296
Total Contract Amount $ 24,400.00
Government Participation: 75 % Amount, $ 18,300.00
Distribution of Expenditures for Month of April, 1952

Colorado Branch

Date Rec'd
MAY 9 1952
BUREAU OF MINES
Denver, Colorado

STRATEGIC AND CRITICAL MINERAL EXPLORATION PROGRAM
OPERATOR'S MONTHLY PROGRESS REPORT

Operators are to submit monthly reports to the designated field representative of the Defense Minerals Administration. Reports are to be submitted in quadruplicate prior to the 15th day of the month following the reporting period.

Narrative.—A concise narrative description of progress made, results accomplished, and any unusual difficulties encountered is to be furnished.

Maps.—Wherever possible, the narrative is to be illustrated with maps or sketches showing formations penetrated and location and assays of samples taken as well as advances in workings. In the case of diamond drilling or churn drilling, the location and inclination of holes is to be shown on a map; logs and assays also are to be submitted.

Cost Accounts.—All applicable parts of this form are to be filled in. This report will form the basis for payments of the Government's participating share of expenses. Audits of accounts may be made from time to time.

DEPARTMENT OF THE INTERIOR
Defense Minerals Administration
RECEIVED
JUN 6 1952

CERTIFICATION

The undersigned company, and the official executing this certification on its behalf, hereby certify that the information contained in this report is correct and complete to the best of their knowledge and belief.

Joseph M. Smith and Charles R. Rugg
(Name of Company)

By Joseph M Smith
(Signature of Authorized Official)

Joseph M Smith May 9, 1952
(Date)

Partner
(Title)

NOTE.—Title 18, U. S. Code (Crimes), section 1001, makes it a criminal offense to make a willfully false statement or representation to any department or agency of the United States as to any matter within its jurisdiction.

16--64068-3

MONTHLY SUMMARY COST STATEMENT

List as Shown on Exhibits Attached to Contract

Item	Monthly Total	Totals Previously Reported	Totals to Date	For Government Use Only		
				Approved Monthly Total	Approved Totals Previously Reported	Approved Totals To Date
1. Fixtures and Improvements:						
(a) Facilities						
(b) Buildings						
(c) Fixtures						
2. Operating Equipment:						
(a) Purchased[1]						
(b) Rented[2]						
Diesel Generator	56.25	None		56.25	none	
(c) Furnished by operator						
Compressor	18.75	None		18.75	none	
Jackhammer	3.75	None		3.75	none	
Dump Truck	7.50	None		7.50	none	
3. Rehabilitation and Repairs:						
(a) Facilities						
(b) Buildings						
(c) Installations						

SMITH and RUGG
Contract Idm - E278
DMA - 2296

PAYROLL SUMMARY - April 7, 1952 to April 30, 1952

4. LABOR

Name	Soc. Sec. No.	Classification	Rate	Time	Gross Wages	SOc. Sec.	W.H.T.	Net Paid
Charles R. Rugg	521 - 14 - 9903	Miner	$1.65	192 hrs.	$316.80	$ none	$ none	$316.80
Clayton M. Knapp	524 - 40 - 3707	Mucker	1.50	76 hrs.	114.00	1.71	14.75	97.54
John R. Langley	522 - 28 - 9447	Hoistman	1.50	128 hrs.	192.00	2.88	28.40	160.72
Michael B. Smith	523 - 40 - 7790	Hoistman	1.50	32 hrs.	48.00	.72	4.20	43.08
		Sub-total			670.80	5.31	47.35	618.14

5. SUPERVISION

Joseph M. Smith	522 - 07 - 9589	Supervisor	2.00	120 hrs.	240.00	none	none	240.00
		TOTAL - All Labor		548 hrs.	$910.80	$5.31	$47.35	$858.14

MONTHLY SUMMARY COST STATEMENT—Continued

Item	Monthly Total	Totals Previously Reported	Totals to Date	For Government Use Only: Approved Monthly Total	Approved Totals Previously Reported	Approved Totals To Date
(d) Fixtures						
4. Labor[3]	670.80	None		670.80	none	
5. Supervision	240.00	None		240.00	none	
6. Supplies						
(a) Timber						
(b) Explosives						
(c) Repair Parts						
(d) Other	343.93	None		343.93	none	
7. Power						
8. Transportation						
9. Insurance						
(a) Fire						
(b) Public Liability						
(c) Workmen's Compensation	147.00	None		147.00	none	
10. Contract Work						
11. Other (specify)						
Total	1487.98	None		1487.98	none	
Deletions						
Adjusted totals						
Totals previously reported						
Totals to date						

[1] Enter amount paid during month toward total purchase price.
[2] Payments for rental of equipment or prorated depreciation on equipment owned by contractor.
[3] Submit copy of the Social Security form filed under the Old Age Insurance system showing complete wage and salary data or furnish copy of payroll sheet giving same data.

NOTE.—Indicate that portion of supervisory, office, and engineering salaries that is chargeable to this project.

FOR GOVERNMENT USE ONLY

Checked by
Entered by
Approved by R.L. Bolmer WMT. [illegible]
Amount approved for payment $1,115.98 $1115.98 $1115.98
Remarks

10—64068-3

Schedule DOA 52-56
June 2, 1952
$1115.98

EXPLORATION UNIT COST AND PROGRESS REPORT FOR MONTH OF April, 1952

(Supply Data Below Applicable Only to Your Operations)

Item	Costs					Progress [4]				
	Wages [1] and salaries	Equipment [2]	Supplies	Other [3]	Total	Unit	Units this month	Units previously reported	Units to date	Units authorized by contract (Exhibit A)
Drifting						Feet			none	515
Crosscutting						Feet			none	125
Raising										
Shafts 28.4%	259.20	24.50	97.68	41.75	423.13	Feet	6		6	60
Winzes										
Drill holes										
Overburden										
Rehabilitation and preparation 58.8%	535.20	50.72	202.23	86.44	874.59					
Geology and geophysics										
Trenching										
Sampling and assaying										
Roads and trails										
Test pits										
Other (specify) Unwatering 12.8%	116.40	11.03	44.02	18.81	190.26					
Totals	910.80	86.25	343.93	147.01	1487.98		6		6	700

[1] Prorate supervisory, engineering, and office salaries in proportion to man-shifts of direct labor.
[2] Prorate charges for equipment that is not exclusively for one type of job (such as compressors) against authorized units of work in each category.
[3] Where entries in the "Other" column (above) are more than 25 percent of the total expenditures, a breakdown of this item should be made.
[4] Specify whether feet, cubic feet, acres, miles, etc.

16—64068-3 U. S. GOVERNMENT PRINTING OFFICE

APR 1 1 1962

Mr. Joseph M. Smith
Mr. Charles R. Rugg
P. O. Box 334
Nederland, Colorado

Re: DMEA-2296 (Tungsten)
Joseph M. Smith and Charles R. Rugg,
a partnership
Rambler Mine
Boulder County, Colorado
Contract Idm-8278

Gentlemen:

By the terms of the subject Exploration Project Contract, as amended, and the certification of discovery or development, dated March 15, 1954, all minerals mined or produced from March 17, 1952, to March 17, 1962, were subject to the Government's percentage royalty as set forth in said contract.

As the period during which production subject to royalty has now expired, the Government according to its present records retains no claim or lien against the property subject to the contract or any future production therefrom. We, therefore, are closing our books and records on this contract. Your attention, however, is called to the provisions of the contract which require the Operator to keep and preserve certain records for the periods indicated.

Sincerely yours,

George Fumich, Jr.

Director

SPHolt/gla
3-22-62
cc to: Director's Reading File
Contract Division
Region III (2)
Docket
Code 500

GOVERNMENT COPY

CERTIFICATION BY THE UNITED STATES OF AMERICA OF A DISCOVERY OR DEVELOPMENT UNDER AN EXPLORATION PROJECT CONTRACT

To: Messrs. Joseph W. Smith and
Charles H. Rugg, a partnership
P. O. Box 354
Nederland, Colorado

Pursuant to the provisions of Exploration Project Contract No. Idm-[illegible], dated March 17, 1953, (Docket No. DMEA 2296), hereinafter called the "Contract" between Messrs. Joseph W. Smith and Charles H. Rugg, a partnership, and the United States of America, hereinafter called the "Government"; to fix the Government's percentage royalty on production and its lien thereon and on the mineral deposit which is the subject of the exploration project, the Government considers and therefore certifies that a discovery or development has resulted from the work from which commercial production of ore may be made.

The Government's estimate of said discovery or development is particularly described and delimited as follows:

Shaft rehabilitation at the Rambler mine followed by sinking, drifting, crosscutting, and raising has resulted in the discovery of a substantial amount of tungsten ore. The tungsten, present in the form of ferberite, occurs in several ore shoots in a branching system of northeast-trending veins. Sufficient data were obtained from the exploration program to estimate ore reserves, part of which were mined during the course of the exploration program.

As a result of this discovery or development, all production from the Rambler and Missing Link lode mining claims (Survey No. 18225A) is subject to the Government's percentage royalty.

THE UNITED STATES OF AMERICA

Dated: MAR 1 5 1954

By: C. P. Mittendorf
Administrator, Defense Minerals
Exploration Administration

cc: Docket
Field Team, Reg. 4
Finance Office
Operating Comm.
Adm. Read. File
Code 400 - Mr. Martin
Code 800 - Mr. Chambers
Code 110 - Mr. Johnson
J.H.Hedges, USBM
R.W.Geehan, USBM
T.P.THAYER, USGS
P. W. Guild, USGS

cc: Irving Gumbel, Act.Direc.,EPS,GSA.
George W. Cowdery, Boulder, Colo.

JHopkins/FARutledge/ls
3/12/54

MAR 1 5 1954

Messrs. Joseph M. Smith and
Charles R. Hugg
P. O. Box 354
Nederland, Colorado

Re: Docket No. DMEA 2296 - Tungsten
Hambler Mine
Boulder County, Colorado
Contract No. Idm-E278

Dear Sirs:

Transmitted herewith is a "Certification of Discovery or Development" under Contract No. Idm-E278 on the property described in Article 2 of the Contract.

By the terms of the Exploration Project Contract and of the Certification, all tungsten and other minerals produced from the aforesaid mine from the date of the Exploration Project Contract No. Idm-E278, are subject to the Government's percentage royalty as set forth in the Exploration Project Contract until the sum of $17,630.34 is paid or until March 17, 1962, whichever occurs first.

Checks for reimbursing the Government for advances under the above-cited contract should be made payable to "The Treasurer of the United States," and transmitted to Mr. W. H. King, Executive Officer, DMEA Field Team, Region IV, 224 New Customhouse Building, Denver 2, Colorado.

Royalty payments to the Government should be accompanied by suitable evidence, such as copies of settlement sheets, showing quantity and grade of the tungsten or other minerals sold, the name of the purchaser, and the price and charges certified to be correct by the purchaser.

You are requested to notify Mr. King of any changes in ownership or production rights that might have any effect on the Government's right to its percentage

royalty. Also, if production ceases at any time for an extended period, please notify Mr. King at 6-month intervals that no production has been made when that is the case.

Sincerely yours,

O. O. Mittenderf

Administrator

Enclosure

cc: Docket
Field Team, Region 4
Operating Committee
Adm. Read. File
Code 400 - Mr. Martin
Code 800 - Mr. Chambers
Code 110 - Mr. Johnson
P. W. Guild - USGS
T. P. Thayer - USGS
R. W. Geehan, - USBM
JHHedges - USBM

JHopkins/ls
3/4/54

MAR 1 5 1954

Mr. George W. Cowdery
420 Pine Street
Boulder, Colorado

Re: Docket No. DMEA 2296 - Tungsten
Joseph M. Smith and
Charles R. Rugg, a partnership
Rambler Mine
Boulder County, Colorado
Contract No. Idm-E278

Dear Mr. Cowdery:

Transmitted herewith for your information is a copy of the "Certification of Discovery or Development" issued as a result of the exploration program under the above-referenced contract. The property as set forth in the contract was leased to Joseph M. Smith and Charles R. Rugg, a partnership, by Mr. George W. Cowdery on November 20, 1951, and is the same property referred to in the Landlord's Subordination Agreement executed by you on March 17, 1952.

By the terms of the Exploration Project Contract and of the Certification, all production from the aforesaid lands from the date of the Exploration Project Contract is subject to the Government's percentage royalty as set forth in the contract until the sum of $17,630.34 is paid or until March 17, 1962, whichever occurs first.

Sincerely yours,

Administrator

Enclosure

cc: Docket
Field Team, Reg. 4
Operating Committee
Adm. Read. File
Code 400 - Mr. Martin
Code 800 - Mr. Chambers
Code 110 - Mr. Johnson

cc: P. W. Guild, USGS
T. P. Thayer, USGS
R. W. Geehan, USBM
J. H. Hedges, USBM

JHopkins/ls
3/5/54

800

MAR 1 5 1954

Mr. Irving Gumbel, Acting Director
Materials Division
Emergency Procurement Service
General Services Administration
Washington 25, D. C.

Re: Docket No. DMEA 2296 - Tungsten
Joseph M. Smith and
Charles R. Rugg, a partnership
Rambler Mine
Boulder County, Colorado
Contract No. Idm-E278

Dear Mr. Gumbel:

Enclosed is a copy of a "Certification of Discovery or Development" for the above-noted project.

Contract No. Idm-E278 was executed March 17, 1952. Expenditures up to $24,400.00 were authorized, of which the Government's share at 75 percent was $18,300.00. The cost of the work completed was $23,507.12, of which the Government's share at 75 percent was $17,630.34.

The exploration program was designed to explore the downward extension of ore shoots discovered and profitably mined in the upper part of the mine. The main inclined shaft was extended 35 feet below the 162-foot level and a new level established at a depth of 187 feet. Drifts were driven in easterly and westerly directions from the shaft. Ore shoots were discovered at two points in the main drifts and another shoot was found on a footwall split off the east drift. A crosscut driven north, into the hanging wall of the west drift, intersected a parallel vein. Drifting and raising on this vein disclosed two additional small ore shoots.

The exploration completed has disclosed five ore shoots having the following estimated reserves:

Location of Ore Shoot	Total Estimated Reserves (tons)	Aver. Grade % WO3	Recovered during Exploration (tons)
201 Drift	220	0.5	20
202 A Raise	110	0.8	10
208 A Raise	550	1.0	70
209 Drift	110	0.5	60
209 B Raise	90	0.5	40
	1,080	0.785	200

Note: The 200 tons recovered from the exploration headings during the project are included in the total estimated reserves.

Sincerely yours,

C. O. Mittendorf

Administrator

Enclosure

cc: Docket
FT, Reg. 4
Oper. Comm.
Adm. Read. File
Code 400 - Mr. Martin
Code 800 - Mr. Chambers
Code 110 - Mr. Johnson
P. W. Guild - USGS
J. H. Hedges - USBM
R. W. Geehan - USBM
T. P. Thayer - USGS

JHopkins/ls
3/4/54

No. 5

AMENDMENT OF CONTRACT: No. Idm-E278

Contract Docket No. DMEA 2296, dated March 17, 1952, between the United States of America and a partnership consisting of Joseph M. Smith and Charles R. Rugg is hereby amended as follows, effective April 15, 1953:

> Referring to EXHIBIT "A" attached to Exploration Project Contract Form MF-200, caption "Labor and Supervision", change "1 Miner at $1.65 per hour" to read "2 Miners at $1.75 per hour"; change "1 Hoistman at $1.50 per hour" to read "1 Hoistman at $1.75 per hour"; add the following to the sentence beginning with the words "The above hourly wages...":
>
> The miners and mucker engaged in advancing headings may be paid on the following basis for units of work performed in lieu of the hourly wage rate:
>
> Drifts & Crosscuts, untimbered, @ $10.00 per foot maximum
> Raises, untimbered, @ $10.00 " " "
>
> The payment per foot of advance shall constitute payment for the work of drilling, blasting, placing muck in bucket at shaft, installing pipe and track and keeping haulage-way and station cleaned up.

This amendment shall not be construed to increase the estimated total cost of the project, the aggregate total amount which the Government may pay or the percentage of the costs which the Government may pay under the provisions of Article 13 of the contract form.

Dated MAY 11 1953

UNITED STATES OF AMERICA

By W. H. King
W.H. King, Executive Officer
DMEA Field Team, Region IV

Joseph M. Smith
Joseph M. Smith, Partner

Charles R. Rugg
Charles R. Rugg, Partner

UNITED STATES
DEPARTMENT OF THE INTERIOR
BUREAU OF MINES

Region IV

Building 20, Room 137
Denver Federal Center
Denver 14, Colorado
April 16, 1953

Memorandum

To: Executive Officer, Field Team, Region IV

From: Chief, Mineral Resources Branch, Mining Division, Region IV

Subject: DMEA 2296, Contract Idm-E278 (Tungsten), Smith and Rugg (Rambler mine), Boulder County, Colorado - Request for amendment to contract

In accordance with instructions contained in your memorandum of April 15, 1953, we are enclosing the original and five copies of R. L. Bolmer's memorandum on the subject request for contract amendment.

Bolmer's recommendations have my approval.

W. M. Traver

W. M. Traver

enclosures

WMT/eb

cc: 5
E278
DMEA Chron.

UNITED STATES
DEPARTMENT OF THE INTERIOR
BUREAU OF MINES

Region IV

Building 20, Room 137
Denver Federal Center
Denver 14, Colorado
April 16, 1953

Memorandum

To: Chief, Mineral Resources Branch, Mining Division, Region IV

From: R. L. Bolmer

Subject: DMEA 2296, Contract Idm-E278 (Tungsten), Smith and Rugg (Rambler mine), Boulder County, Colorado - Request for amendment to contract

The operators of the subject exploration project have requested that their contract be amended to increase the maximum hourly rates on certain labor classifications and to permit the employment of labor on a contract footage basis.

The maximum rates itemized in the operators' letter of request are considered reasonable and justified and it is recommended that the subject contract be so amended.

R. L. Bolmer

R. L. Bolmer
Mining Engineer

RLB/cb

cc: 5
E278
DMEA Chron.

Smith and Rugg.
Nederland Colorado
April 10th 1953

Mr. W. H. King.
Executive Officer, DMEA
Field Team, Region IV

Dear Mr. King:

Referring to Contract Docket No. DMEA 2296 Idm-R278 between USA and partnership consisting of Joseph M. Smith and Chas. R. Rugg.

Due to difficulty in obtaining experienced help, we request subject contract be ammended as follows,

Under Exhibit "A" that part Labor and Supervision to read;

I	Foreman	$2.00	per hour	Maximum.
2	Miners	$1.75	" "	"
I	Mucker	$1.50	" "	"
I	Hoistman	$1.75	" "	"
I	Book-keeper	$50.00	Per month	Maximum.

Labor Contracts may be given as follows; Contractor to Drill, break, place muck in bucket at shaft, install pipe and rails, and keep haulageway and station cleaned up, at following rates;

Drifts.	untimbered	$10.00 per ft.	Maximum.
Crosscuts	"	$10.00 " "	"
Raises	"	$10.00 " "	"

Very truly yours,

Smith and Rugg.

Joseph M Smith
Partner.

No. 4

AMENDMENT OF CONTRACT: No. Idm-E278

Contract Docket No. DMEA 2296, dated March 17, 1952, between the United States of America and a partnership consisting of Joseph M. Smith and Charles R. Rugg is hereby amended as follows, effective as of the date of said contract:

> Referring to "Article 3. Exploration Project" of Exploration Project Contract Form MF-200, delete "fourteen (14) months" and in lieu thereof substitute "twenty (20) months".

This amendment shall not be construed to increase the estimated total cost of the project, the aggregate total amount which the Government may pay or the percentage of the costs which the Government may pay under the provisions of Article 13 of the contract form.

Dated January 26 1953.

Joseph M Smith
Joseph M. Smith

Charles R Rugg
Charles R. Rugg

UNITED STATES OF AMERICA

By W. H. King
Executive Officer, DMEA
Field Team, Region IV

Region IV

UNITED STATES
DEPARTMENT OF THE INTERIOR
BUREAU OF MINES

Building 20, Room 137
Denver Federal Center
Denver 14, Colorado
December 17, 1952

Memorandum

To: Executive Officer, Field Team, Region IV

From: Chief, Mineral Resources Branch, Mining Division, Region IV

Subject: DMEA 2296, Contract Idm-E278 (Tungsten), Smith and Rugg (Rambler mine), Boulder County, Colorado - Request for amendment to contract

Please find enclosed the original and five copies of R. L. Bolmer's memorandum recommending approval of the above request for an amendment to extend the contract for six months and for authority to recess operations until April 15, 1953.

I concur with Bolmer's recommendation.

W. M. Traver, Jr.

W. M. Traver, Jr.

enclosures

d/cb

cc 5
E278
DMEA Chron

UNITED STATES
DEPARTMENT OF THE INTERIOR
BUREAU OF MINES

Building 20, Room 137
Denver Federal Center
Denver 14, Colorado
December 17, 1952

Memorandum

To: Chief, Mineral Resources Branch, Mining Division, Region IV

From: R. L. Bolmer

Subject: DMEA 2296, Contract Idm-E278 (Tungsten), Smith and Rugg (Rambler mine), Boulder County, Colorado - Request for amendment to contract

The contractors under the subject contract have requested an amendment to provide for an extension of time in which to complete the project and also authorization for recessing operations during the winter months. An extension of six months and a recess until April 15, 1953, have been requested.

The reason for the recess is the adverse weather conditions prevailing during the winter months.

The cost of reopening the mine in the spring should be negligible compared to the expense and lower efficiency which will be incurred through a winter operation. A six-month extension will require the project to be completed by November 17, 1953.

The requested amendment and authorization are considered justified and are recommended.

R. L. Bolmer

R. L. Bolmer,
Mining Engineer

RLB/cb

cc: 5
E278, DMEA Chron

Nederland, Colorado
Post Office Box 354
December 6, 1952

Mr. W. H. King
Department of Interior
Defense Minerals Administration
224 New Custom House
Denver 2, Colorado

Subject: DMEA - 2296
CONTRACT - Idm E-278

Dear Sir:

It is hereby requested that the subject contract be amended to provide for an extension of time of six (6) months in which to complete the contract, and it is further requested that authorization be granted for shutting down operations during the winter months - operation to be resumed on or before April 15, 1953.

The above requests are made due to the adverse weather conditions prevailing during the winter months which results in in-efficient operations.

It is understood that wages, depreciation and rental of equipment expense will cease during the shut down period.

Sincerely yours,

SMITH and RUGG

S&R:rs

By: Josephine Smith

/C
O
P
Y/

Nederland, Colo - E-278
Dec. 16, 1952

Mr. Wm. Traver
Bureau of Mines

Dear Mr. Traver:

I am enclosing to you Geo. Cowdery's agreement of suspension of required shifts on our lease on the Rambler Mine. As he made only one copy, I am sending it to you as you will know best what to do with it.

We closed the Rambler the end of November and removed all small equipment for safe keeping.

Started the Conger on Dec. 1st and to date have shipped mined ore and stope fill as follows -

6½ tons - 2.10% W.O.^{3}
12½ tons - 2.60%
12 tons - 1.80%
13 tons - 2.10%
28 tons - no returns yet

It looks like the old mine still has possibilities yet, but may require considerable development work. I hope we will be able to keep it going.

Will welcome a visit from yourself, Bob Bolmer and Ogden Tweto.

Regards,

/s/ Joseph M. Smith

C
O
P
Y

GEORGE W. COWDERY
Coal and Tungsten
420 Pine Street
Boulder, Colorado

December 10, 1952

Bureau of Mines
New Customhouse Building
Denver, Colorado

Dear Sirs:

Joseph M. Smith and Charles Rugg have asked that the working agreement in their lease on the Rambler be suspended until April 15, 1953, and I have agreed to this request due to the snow blocked roads, frozen pipe lines, etc., under these conditions they cannot operate in an economical manner.

Yours very truly,

/s/ George W. Cowdery

UNITED STATES
DEPARTMENT OF THE INTERIOR
DEFENSE MINERALS ADMINISTRATION
WASHINGTON 25, D. C.

December 31, 1952

Memorandum

To: Administrator

From: Chief Counsel

Subject: Smith and Rugg, Partners, Docket No. DMEA-2296
Contract No. Idm-E278 - Tungsten

Reference is made to a memorandum dated November 26 from the Executive Officer, DMEA Field Team, Region IV, to the Administrator submitting Amendment No. 3 to the subject contract. The amendment has been executed by the parties and is in effect.

It is my opinion that Amendment No. 3 is improper and should not have been entered into in the form submitted. However, it is within the delegated authority of the Field Team Executive Officer, and will have to be administered as executed.

The contract, as amended by Amendments Nos. 1 and 2, provides for repairing the hoist house and headframe, unwatering and rehabilitating the shaft, deepening the shaft, drifting, crosscutting, and raising. Amendment No. 3 eliminates the raising, and provides that:

> "The balance of funds, originally allocated for 640 feet of drifting and crosscutting, and 60 feet of shaft sinking, which were not expended thereon by reason of geologic conditions encountered as the work progressed, may be expended for other drifting, crosscutting, slabbing or raising at locations acceptable and to the extent approved by the DMEA representative."

One trouble with this amendment is that no funds were ever "originally allocated" for the items indicated in the amendment. The estimated total cost of the project is $24,400.00, and I suppose this amount was allocated to this contract, but such allocation relates to nothing but the total. No amendment should ever be written in terms of "the balance of funds originally allocated." The allocation of funds is no part of the contract, and neither the contract nor any amendment should be expressed in such terms.

A more substantial objection to the amendment is that it provides for "drifting, crosscutting, slabbing or raising at locations acceptable and to the extent approved by the DMEA representative," without any specifications or description whatever of the work to be performed. I think this is an open door to fraud. Contribution can be claimed by the operator for any kind of work performed on the property falling within this description.

The total lack of description or specifications for the work might not be objectionable in the case of a property upon which no work whatever had been done previously. In the case of an old property with previous underground works, it seems likely to me that with the limited facilities DMEA has for checking the performance of work, the operator could claim for any kind of pre-existing work which had long been performed.

Under these circumstances, it is simply up to the Field Team to check the work and vouchers for payment to determine that the claims for the Government's contribution are proper.

J. L. Hofflund

J. L. Hofflund
Chief Counsel

Attachments

JLHofflund/mef
cc to: Mails and Files
Admr. R. File
Mr. Chambers
Mr. Selfridge
Mr. Kane
Mr. Hofflund
Chron.

Mining Div
Date Rec'd
NOV 26 1952
BUREAU OF MINES
Denver, Colorado

AMENDMENT OF CONTRACT: No. Idm-E278 No. 3

Contract Docket No. DMEA 2296, dated March 17, 1952, between the United States of America and a partnership consisting of Joseph M. Smith and Charles R. Rugg is hereby amended as follows, effective November 4, 1952:

> Referring to Amendment No. 2 dated August 7, 1952, which amended Amendment No. 1 dated June 12, 1952, that in turn amended "EXHIBIT A" attached to Exploration Project Contract Form MF-200, void first said Amendment No. 2 in its entirety.
>
> Referring to Amendment No. 1, dated June 12, 1952, which amended "EXHIBIT A" attached to Exploration Project Contract Form MF-200, add the following to the second paragraph of said Amendment:
>
>> The balance of funds, originally allocated for 640 feet of drifting and crosscutting, and 60 feet of shaft sinking, which were not expended thereon by reason of geologic conditions encountered as the work progressed, may be expended for other drifting, crosscutting, slabbing or raising at locations acceptable and to the extent approved by the DMEA representative.

This amendment shall not be construed to increase the estimated total cost of the project, the aggregate total amount which the Government may pay or the percentage of the costs which the Government may pay under the provisions of Article 13 of the contract form.

Dated November 26 1952.

Joseph M Smith
Joseph M. Smith

Charles R Rugg
Charles R. Rugg

UNITED STATES OF AMERICA

By W. H. Kung
Executive Officer, DMEA
Field Team, Region IV

UNITED STATES
DEPARTMENT OF THE INTERIOR
DEFENSE MINERALS ADMINISTRATION
WASHINGTON 25, D. C.

200 New Customhouse
Denver 2, Colorado

November 7, 1952

Memorandum

To: DMEA Field Team, Region IV

From: A. H. Koschmann

Subject: Memorandum by Ogden Tweto on DMEA Docket 2296, Contract Idm-E278.

Attached are 8 copies of a progress report on the Lower Rambler tungsten mine, Boulder County, Colorado. Exploration, as originally planned, was not proving successful, and Tweto reexamined the mine and suggests modifications in the exploration program.

A. H. Koschmann
A. H. Koschmann
Supervising Geologist
Colorado-Wyoming

Enclosures (8)

November 7, 1952

Memorandum

To: DMEA Field Team, Region IV

From: Ogden Tweto, U. S. Geological Survey

Subject: Examination of Lower Rambler tungsten mine, Boulder County, Colorado; DMEA Docket 2296.

I visited the Lower Rambler mine on November 4, 1952, with R. L. Bolmer of the Bureau of Mines, and Joseph M. Smith, operator. The original plan of exploration provided for sinking the shaft 50 feet (it was already down 65 feet below the first and only level) and doing 640 feet of drifting and crosscutting on a new level at the bottom of the shaft. Sinking disclosed that the vein flattened and became weaker downward, so the shaft was sunk only about 35 feet, and the new level was run at a depth of about 185 feet, or about 95 feet below the first level. To date, the new level has been run 60 feet northeast of the shaft and 150 feet southwest; and 180 feet of drifting and crosscutting has been done in the footwall northeast of the shaft and in the hanging wall southwest of the shaft.

This work has revealed several small and apparently discontinuous veins, and many thin ferberite "feeders" or veinlets. Two small showings of ferberite are worth further exploration. One is on a vein in the footwall northeast of the shaft, where there is about an inch of ferberite for a length of a few feet. The other is in the main drift about 120 feet

fracture of some kind with a heavy water flow at 20 feet. As the general objective in this southwestern area is to drift on the best available vein to its intersection with the Maine-Cross breccia reef, about 65 feet southwest of the present breast, it is recommended that the crosscut be extended along the drill hole to the fissure that is making the water. If this looks promising, then it may be followed southwest to the breccia reef. (The incentive here is the fact that the orebody of the Cross No. 2 mine, just southwest of the reef, cut off against the reef, and no work was done beyond the reef because the property line was very near this place). If the fissure cut by the drill hole appears unpromising, it is unlikely that further work to the southwest can be justified, as the reef is an objective only insofar as it can be reached by drifting on a vein of some promise.

To summarize, work at four places is recommended, all contingent on results obtained: the two raises, the wall of the drift near the small ore occurrence in the footwall northeast of the shaft, and the 20-foot crosscut and possible drift to the southwest at the southwest end of the level. If none of these projects pan out, the contract should be terminated.

November 11, 1952

Mr. W. H. King
Department of Interior
Defense Minerals Administration
224 Custom House
Denver 2, Colorado

Subject: DMEA - 2296
Contract - Idm E 278

Dear Sir:

We herewith request that subject contract to be amended to provide for two raises as follows:

(1) Raise # 201-A beginning in #201 drift approximately 115 feet south west of shaft, on 200 foot level--height to be determined by conditions encountered and subject to approval of DMEA representative, but not to exceed 90 feet.

(2) Raise #208-A, beginning in #208 drift approximately 40 feet north east of shaft on 200 foot level, height to be determined by conditions encountered and subject to approval by DMEA representative, but not to exceed 90 feet.

After an inspection by Mr. Ogden Tweto and Mr. Balmer, advisability of these two raises on small showing of ore was generally agreed upon. Probable discontinuance of drifting north east will provide ample funds without increasing total cost of project.

Sincerely yours,

Smith & Rugg
By Joseph M Smith
P. O. Box 354
Nederland, Colorado

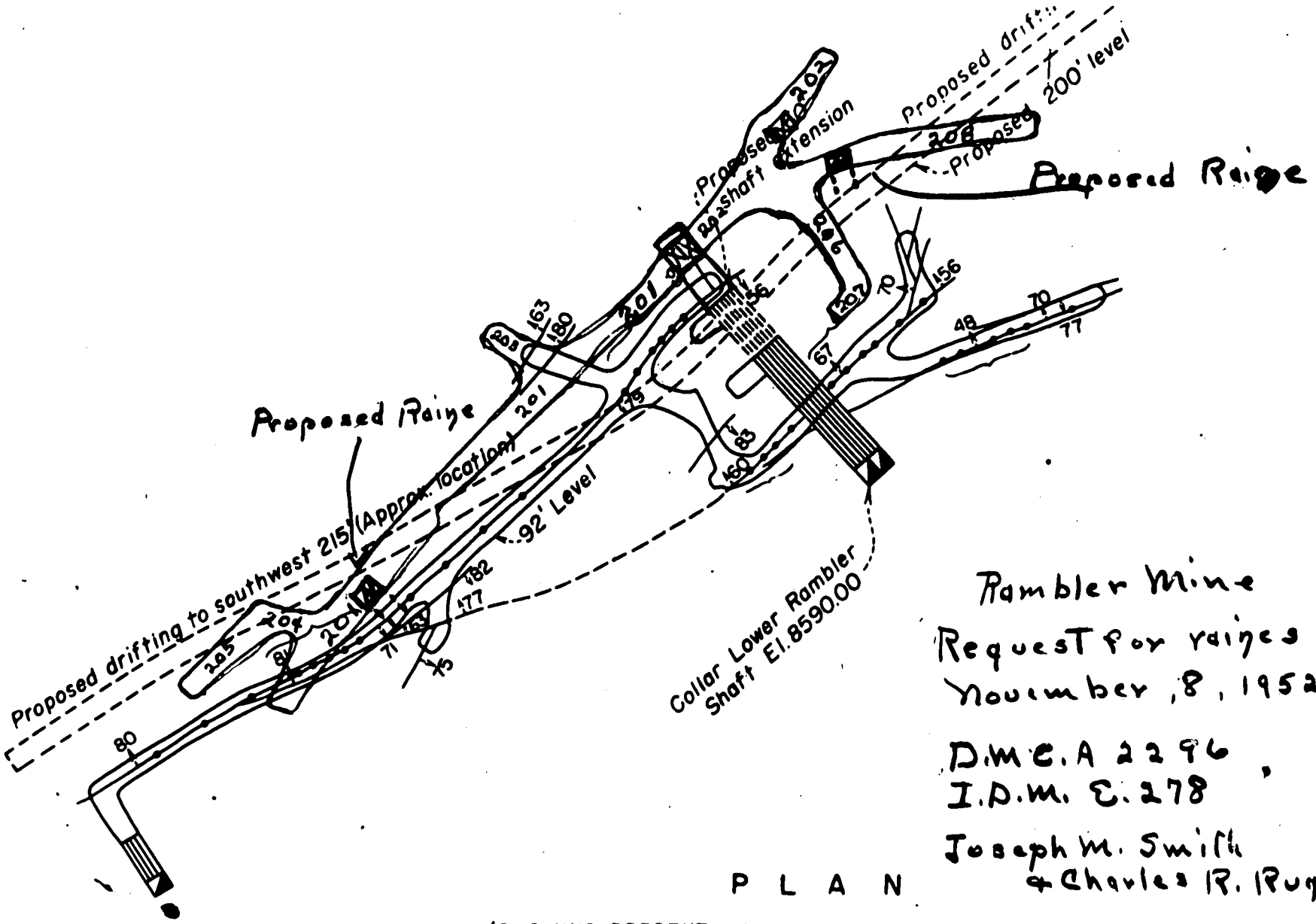

P L A N

(SHOWING PRESENT WORKINGS & PROPOSED EXPLORATION)

30 0 30 60 90

SCALE OF FEET

Government Copy
Thompson
No. 2

AMENDMENT OF CONTRACT: No. Idm-E278

Contract Docket No. DMEA 2296, dated March 17, 1952, between the United States of America and Joseph M. Smith and Charles R. Rugg, a partnership, is hereby amended as follows, effective July 7, 1952:

> Referring to Amendment No. 1, dated June 12, 1952, which amended "EXHIBIT A" attached to Exploration Project Contract Form MF-200, add the following to the second paragraph of said Amendment:
>
> Raising on the newly established 200 level at a point approximately 35 feet northeast of the shaft is authorized in an amount not to exceed 50 feet. Funds for the raising will be made available from funds which otherwise would have been used in extending the new 200 level northeast of the shaft. The proposed raise is shown on the attached map titled "Plan, Rambler Mine, Boulder Co., Colo., DMEA 2296", which is made a part of this Amendment.

This amendment shall not be construed to increase the estimated total cost of the project, the aggregate total amount which the Government may pay or the percentage of the costs which the Government may pay under the provisions of Article 13 of the contract form.

Dated August 7, 1952.

Joseph M. Smith
Joseph M. Smith

Charles R. Rugg
Charles R. Rugg

UNITED STATES OF AMERICA

By W. R. Ring
Executive Officer - DMEA

GCS

UNITED STATES
DEPARTMENT OF THE INTERIOR
BUREAU OF MINES

Region IV

Building 20, Room 137
Denver Federal Center
Denver 14, Colorado
July 30, 1952

Memorandum

To: Executive Officer, Field Team, Region IV

From: Chief, Colorado Branch, Mining Division, Region IV

Subject: DMEA 2296 (Tungsten), Contract Idm-E278, Smith and Rugg (Rambler mine), Boulder County, Colorado - Amendment to contract

Please find enclosed the original and five copies of R. L. Bolmer's memorandum recommending the above amendment allowing a 50-foot raise on the project.

I concur with his recommendations.

W. M. Traver, Jr.

W. M. Traver, Jr.

enclosures

WMT/amh

cc 5
E278
DMEA Chron.

UNITED STATES
DEPARTMENT OF THE INTERIOR
BUREAU OF MINES

Region IV

Building 20
Denver Federal Center
Denver 14, Colorado

July 29, 1952

Memorandum

To: Chief, Colorado Branch, Mining Division, Region IV

From: R. L. Bolmer

Subject: DMEA 2296 (Tungsten), Contract Idm-E278, Smith and Rugg (Rambler mine), Boulder County, Colorado - Amendment to contract

The contractor under the subject contract has requested, by letter dated July 8, 1952, an amendment which will provide for a raise, not to exceed 50 feet in length, approximately 35 feet northeast of the shaft on the newly established 200-foot level of the Rambler mine. The footage requested for raising may be deducted from the footage allowed for drifting northeast of the shaft with no increase in the estimated total cost of the project.

The vein, upon which the shaft was deepened and upon which drifting was to be performed, flattened and weakened with depth. It became progressively weaker and finally disappeared as drifting progressed away from the shaft on the 200-foot level. The site selected for a raise contains a mineralized cross fracture. Raising at this point is considered advisable, partly to trace the

mineralization but also to determine the geologic structure upon which a continuation of the exploration will be based.

An amendment permitting the raise at the location and for the distance requested is recommended. The contractor has been given verbal permission to begin this work; therefore, the amendment should be made retroactive to the date of the letter of application.

R. L. Bolmer

R. L. Bolmer
Mining Engineer

RLB/bam

cc: 5
E278
DMEA Chron.

P.O.Box 354
Nederland, Colorado
July 8, 1952

Mr. W. H. King
U.S. Dept. of Interior
Defense Minerals Administration
224 New Customhouse
Denver 2, Colorado

Dear Mr. King:

Referring to Contract Docket No. DMEA-2296, Idm E-278 - between The United States of America and a partnership, consisting of Joseph M. Smith and Charles R. Rugg.

We request that the subject contract be amended to provide for a raise not to exceed 50 feet, approximately 35 feet northeast of shaft on newly established 200 foot level Lower Rambler Mine.

We feel this raise is advisable due to broken condition of formation encountered in drifting and the need for geological information to guide further development.

The footage requested for raising may be deducted from footage allowed for drifting northeast of shaft with no increase in estimated total cost of project.

Yours very truly,

SMITH and RUGG

By Joseph M Smith

JMS/rs
6 cc

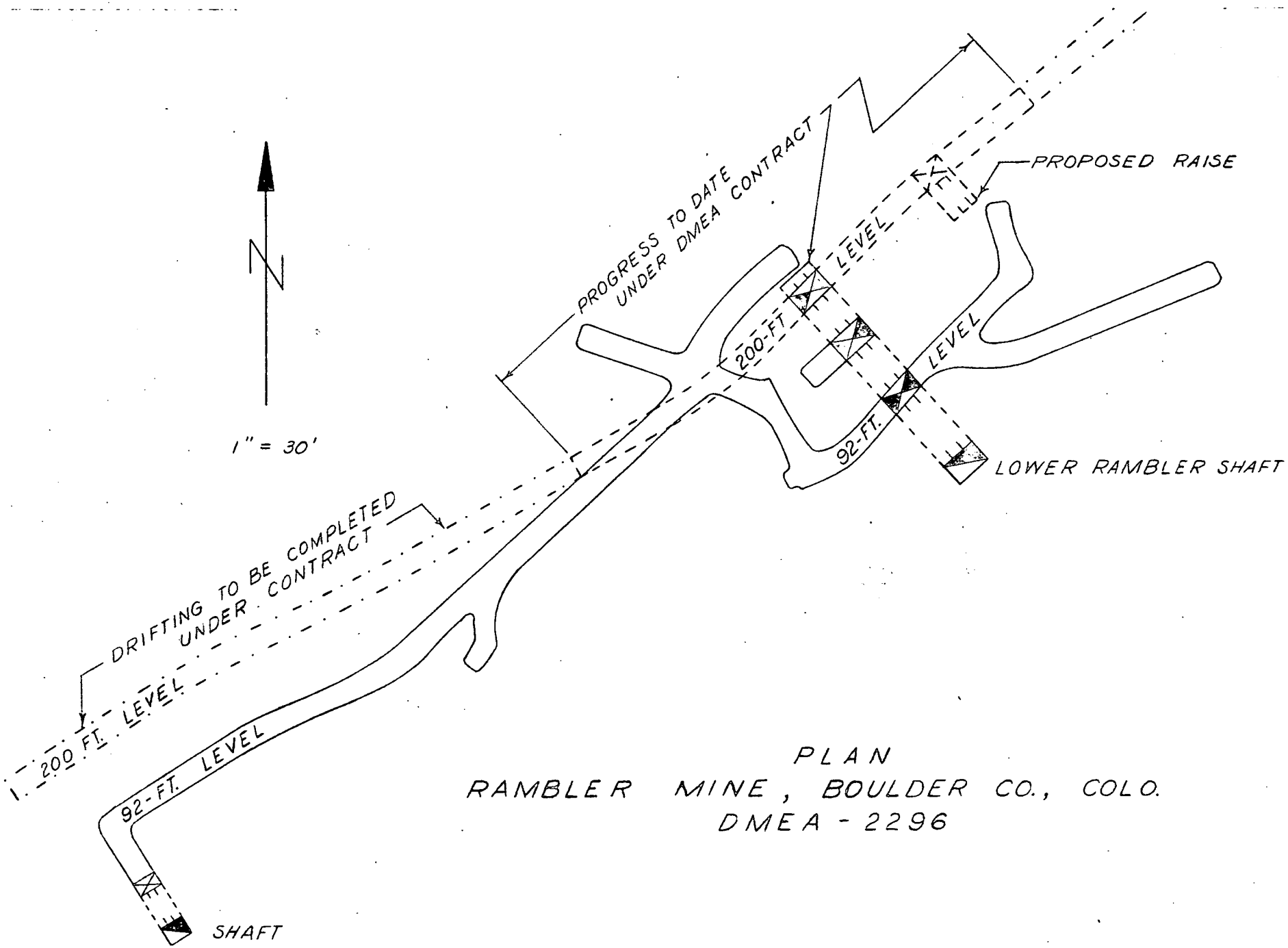

PLAN
RAMBLER MINE, BOULDER CO., COLO.
DMEA - 2296

Government Copy
Tungsten

No. 1

AMENDMENT OF CONTRACT: No. Idm-E278

Contract Docket No. DMEA 2296, dated March 17, 1952, between the United States of America and a partnership consisting of Joseph M. Smith and Charles R. Rugg is hereby amended as follows, effective as of the date of said Contract:

> Referring to "EXHIBIT A" attached to Exploration Project Contract Form MF-200, caption "Exploration Project" delete the entire paragraph beginning with, "The proposed project consists of . . ." and in lieu thereof insert the following:
>
> "The proposed project consists of repairing the hoist house and headframe, unwatering and rehabilitating the Lower Rambler shaft, sinking the shaft approximately 60 feet, drifting on the vein approximately 300 feet in a northeast direction and approximately 215 feet in a southwest direction from the shaft on a new level established at approximately 200 feet below the collar of the Rambler Shaft, and crosscutting from the newly established level an aggregate of 125 feet at locations and to the extent as approved by the DMEA Representative."

This amendment shall not be construed to increase the estimated total cost of the project, the aggregate total amount which the Government may pay or the percentage of the costs which the Government may pay under the provisions of Article 13 of the contract form.

Dated June 12, 1952.

Joseph M. Smith

Charles R. Rugg

UNITED STATES OF AMERICA

By W. H. King
Executive Officer - DMEA

gw

GCS

Doc[illegible] No. ~~DMEA 2296~~

Commodity ~~Tungsten~~

DEPARTMENT OF THE INTERIOR

DEFENSE MINERALS EXPLORATION ADMINISTRATION

~~CONFIDENTIAL~~

STRATEGIC AND CRITICAL MINERALS EXPLORATION PROGRAM

TO: Chief, Finance Section, Budget and Finance Branch, Bureau of Mines

Please enter on the records of the Defense Minerals Exploration Administration, under the Strategic and Critical Minerals Exploration Program, the following contract, or amendment to contract.

Contract No. Idm-E 278

Date of Contract ~~or Amendment~~: March 17, 1952

Name and Address of Operator:
Joseph M Smith, Chas. H. Duge
Nederland, Colorado

Amount of Government participation ____ $ 10,300.00

Percent of Government participation 75 %

Region: IV State: Colorado

~~NOTE~~: Please release 0669.66; Advice Contract Administration and Audit Division

J. L. Chambers, (Name)
Chief, Contract Administration and Audit Division

(Title)

Date Delivered to Bureau of Mines, Washington ~~10/9/53~~ 1-8-54 13808

Docket No. 2296

Commodity Tungsten

DEPARTMENT OF THE INTERIOR

DEFENSE MINERALS EXPLORATION ADMINISTRATION

STRATEGIC AND CRITICAL MINERALS EXPLORATION PROGRAM

TO: Chief, Finance Section, Budget and Finance Branch, Bureau of Mines

Please enter on the records of the Defense Minerals Exploration Administration, under the Strategic and Critical Minerals Exploration Program, the following contract, or amendment to contract.

Contract No. Idm-E 278

Date of Contract ~~or Amendment~~: March 17, 1952

Name and Address of Operator: Joseph M. Smith
Charles R. Rugg
Nederland, Colorado

Amount of Government participation $18,300.00

Percent of Government participation %75

Region: IV State: Colorado

for J.L. (Name) Chambers
Chief, Contract Administration and Audit Division

(Title)

Date Delivered to Bureau of Mines, Washington March 19, 1952 13008

File

Mr. Chandler

Mr. J. H. East, Jr.,
Executive Officer
DMEA Field Team, Region IV
224 New Customhouse Building
Denver 2, Colorado

Re: DMA Docket No. 2296 (Tungsten)
Joseph M. Smith and
Charles R. Rugg
Exploration Project Contract Idm-E278

Dear Mr. East:

This will acknowledge receipt of your letter of March 17, 1952, and the enclosed six copies of the subject contract. This contract has been recorded and given the contract No. Idm-E278, and dated March 17, 1952. Copy for the Operator and your files are enclosed herewith.

In reviewing the contract it is noted that some items may require clarification, inasmuch as they involve problems of approving payments and auditing contracts. Your attention is called to the items under the heading "Operating Equipment", on page 1 of Exhibit "A". Under the sub-heading "To be Rented", you have listed certain equipment at specified rental rates per month and the estimated total rental of all such equipment at $1,400.00. There is no indication as to the number of months for which each item is to be rented. The contract is for a period of fourteen months, and if all of the equipment is to be used during the entire operation the total rental would be considerably more than $1,400.00. The same type of information is lacking in Exhibit "A" for the equipment to be furnished by the Operator.

On page 3 under the heading "Rehabilitation and Repairs" you have listed two items, and then have stated "A breakdown of these two items is given under 'Labor and Supplies'". This appears to be misleading, as there is no breakdown under "Labor and Supervision", nor under "Supplies", which can be identified as a breakdown of the costs of the two items under "Rehabilitation and Repairs". It would appear to us that your statement should probably read - The costs of labor and supplies for these two items are included under the headings "Labor and Supervision", and "Supplies" on page 2 of Exhibit "A".

We feel that clarification in future contracts, such as above mentioned, will avoid any misunderstanding in approving payments, or in auditing contracts.

Sincerely yours,

C. O. Mittendorf

Acting Administrator
Defense Minerals Exploration
Administration

Enclosures (2)

FEJohnson/bih
3/26/52
cc to: Docket
Admr's Reading File
Operating Committee
Messrs. Selfridge
Chambers
FEJohnson

MF-200
(June 1951)

DMEA-2296
Docket No. [redacted]
Commodity Tungsten
Idm-E278

UNITED STATES OF AMERICA
DEPARTMENT OF THE INTERIOR
DEFENSE MINERALS ADMINISTRATION

GOVERNMENT'S COPY

EXPLORATION PROJECT CONTRACT [1]

It is agreed this 17th day of March, 1952, between the United States of America, acting through the Department of the Interior, Defense Minerals Administration, hereinafter called the "Government," and [2] a partnership: Joseph M. Smith
Charles R. Rugg
Nederland, Colorado

hereinafter called the "Operator," as follows:

1. *Authority for contract.* This agreement is entered into under the authority of the Defense Production Act of 1950, pursuant to Mineral Order 5, entitled "Regulations Governing Government Aid in Defense Exploration Projects."

2. *Operator's property rights.* The exploration project shall be conducted on that certain property situated in the State of Colorado, County of Boulder described as follows: [3]
Rambler Claim No. 18225A
Missing Link Claim No. 18225A
Located in the S. E. 1/4, Sec. 24, T. 1 S., R. 73W, 6th P. M.

with respect to which the Operator represents and undertakes: [4]

(*a*) [redacted]

(*b*) That he is a lessee, in possession and entitled to possession, and the subordination agreement of the lessor is attached.

3. *Exploration project.* The Operator, within sixty (60) days from the date of this contract shall commence work on a project of exploration for [5] Tungsten; shall prosecute the work efficiently, expertly, in a workmanlike manner, in accordance with good mining standards, with suitable and adequate equipment, materials, and labor, all properly designed to bring the project to completion within a period of [6] fourteen (14) months from the date of this contract. The exploration project and the work to be performed are more fully described on Exhibit "A" attached hereto, which, with any maps or drawings thereto attached, is made a part of this contract.

4. *Performance of the work.* The work shall be performed by the Operator, under his sole direction and control: *Provided,* That with the consent of the Government and its written approval of the contract or contracts, all or any part of the work may be performed by the Operator through contract or contracts with independent contractors. The Government shall have the right to enter and observe and inspect the work at all reasonable times, and the Operator shall provide the Government with all available means for doing so. The Government may consult with and advise the Operator on all phases of the work.

5. *Fixtures and improvements.* The Operator shall devote the land and all existing improvements, facilities, buildings, installations, and appurtenances to the purposes of the exploration project without any allowance for the use, rental value, depreciation, depletion, or other cost of acquiring, owning, or holding possession thereof. Any additional facilities, buildings, and fixtures, to be purchased, installed, or erected by the Operator, with the estimated cost of each, to which the Government will contribute currently its agreed pro rata share, are listed in Exhibit "A" attached hereto. The difference between the cost of such additional facilities, buildings, or fixtures, and the salvage value thereof at the conclusion of the work, shall be charged as a cost of the project to which the Government has contributed its pro rata share.

6. *Operating equipment.* Any operating equipment to be rented, purchased, or furnished by the Operator, with the allowable rental, purchase price, or depreciation, as the case may be, is listed under appropriate headings in Exhibit "A" attached hereto. As to equipment purchased for the project, the Government will contribute its agreed pro rata share of the cost thereof, and the difference between the cost and the salvage value at the conclusion of the work shall be charged as a cost of the project to which the Government has contributed its pro rata share.

[1] If sufficient space is not provided in any blank, use an extra sheet of paper and refer to it in the blank.
[2] State name, address, and nature of organization if any.
[3] Give legal description or enough to identify the property.
[4] Strike out the provision not applicable.
[5] Name of mineral.
[6] Not in excess of 2 years.

7. *Title to and disposition of property.* All facilities, buildings, fixtures, equipment or other items costing more than $50 each, paid for or purchased with funds contributed jointly by the Operator and the Government, shall belong to the Operator and the Government jointly, in proportion to their respective contributions, and upon the termination of the contract, if they have any salvage value, shall be disposed of for their joint account unless the Government, in writing, waives its interest in any such items. The Government may require the dismantling, severance from land, and removal of any such items in order to realize its interest in the salvage value thereof, and the cost of any such removal and of the disposal of the items shall be for the joint account of the parties in proportion to their respective interests.

8. *Labor and supervision.* An itemized schedule of labor, by numbers and classes (miners, muckers, millmen, etc.), and of supervisors, by numbers and positions, with the maximum wages or salaries that may be paid to each as an allowable cost of the project is set forth in Exhibit "A" attached hereto.

9. *Rehabilitation and repairs.* A statement of the cost of any necessary rehabilitation or repairs to put existing facilities, buildings, installations, and fixtures into useful and operable condition and which are to be allowed as costs of the project is included in Exhibit "A."

10. *Allowable costs of the project.* The costs of the project in which the Government will participate are limited to the necessary, reasonable, direct costs of performing the exploration work, including the costs of materials, supplies, engineering, power, water, analytical work, accounting, and utilities, including items of equipment costing less than $50 each; and the costs referred to in Articles 5, 6, 8, and 9, and the exhibits annexed to and referred to in this contract. Although the Government may pay part of the cost of new or additional facilities, structures, buildings, and equipment, only the depreciation on such items, computed as indicated in Articles 5 and 6, will be charged as a cost of the project. No items of general overhead, corporate management, interest, taxes, or any other indirect costs not expressly allowed by these provisions, or work performed or costs incurred before the date of this contract, shall be allowed as costs of the project in which the Government will participate.

11. *Accounts and audits.* The Operator shall keep suitable records and accounts of operations, which the Government may inspect and audit at any time. The Government may at any time require an audit of the Operator's records and accounts by a certified public accountant, the cost thereof to be treated as a cost of the project. The Operator shall keep and preserve said records and accounts for at least 3 years after the completion of the project or the termination of this contract.

12. *Progress reports.* The Operator shall provide the Government with monthly reports of work performed under the contract upon forms to be provided by the Government. Each monthly progress report shall bear the certification of the Operator and shall constitute the Operator's invoice of costs incurred on the project during the period covered by the report.

13. *Payment to the Operator.* The monthly progress report (invoice), to the extent approved by the Government, shall be processed for payment by the Government. Payment shall be made in the amount of 75 percent of the approved costs incurred; *Provided,* That the aggregate total of all sums paid by the Government under this agreement shall not exceed $ 18,300.00, which is 75 percent of the agreed estimated total cost of this project, $ 24,400.00.

14. *Final reports by Operator.* Upon completion of the project or termination of this contract, the Operator shall provide the Government with a comprehensive geologic and engineering report, including an estimate of ore reserves, to the best of his ability. Four copies of all reports shall be furnished to the Government.

15. *Repayment by Operator.* If, upon the completion of the exploration project or termination of the contract, the Government considers that a discovery or development has resulted from the work from which commercial production of ore may be made, the Government, within 6 months thereafter, shall so certify to the Operator, particularly describing and delimiting its estimate of the discovery or the development. Thereafter, if and as ore is produced as a result of such discovery or development, the Operator and his successor in interest shall be and become obligated to pay to the Government a percentage royalty on the net smelter returns or other net proceeds realized from such ore, concentrates, or metal produced within ten (10) years from the date of this contract, until the total amount contributed by the Government, without interest, is fully repaid or said 10 years have elapsed, whichever occurs first, as follows:

Of net smelter returns or other net proceeds not in excess of eight dollars ($8.00) per ton of ore: One and one-half (1½) percent.

Of net smelter returns or other net proceeds in excess of eight dollars ($8.00) per ton of ore: One and one-half (1½) percent, plus one-half (½) percent for each additional full fifty cents ($0.50) in excess of eight dollars ($8.00) per ton of ore, but not in excess of a maximum of five (5) percent.

This obligation to repay from net returns or proceeds shall be and remain a claim and lien upon the mineral deposit which is the subject of the exploration project and upon any production resulting from such discovery or development, in favor of the Government, until fully paid, or until said 10-year period has elapsed; and this claim and lien and the Government's right to repayment shall survive any termination of the contract, whether by completion of the exploration project or otherwise. This article is not to be construed as imposing any obligation on the Operator or his successor in interest to produce ore from any such discovery or development.

16. *No assignment of contract.* Without the written consent of the Government, the Operator shall not assign or otherwise transfer or hypothecate this contract or any rights thereunder.

17. *Termination and completion.* The Government may, at any time, by written notice to the Operator, terminate this contract: (*a*) If the Operator fails to provide his share of the money necessary to prosecute operations pursuant to the terms of the contract; (*b*) if the Operator, in the opinion of the Government, fails to prosecute operations pursuant to the terms of the contract; or (*c*) if in the opinion of the Government, operations up to the time of the notice have not indicated the probability of making any worthwhile discovery and in the opinion of the Government further operations are not justified. Upon the completion of the project or any termination of the contract the Operator shall render to the Government a full and final accounting of his operations under the contract and his expenditures of money; shall dispose of any unused materials, supplies, and equipment for the joint account of the Operator and the Government in the proportion of their respective interests; and shall pay to the Government its pro-rata share of any money remaining.

Executed in sextuplicate the day and year first above written.

Joseph M Smith Charles R Rugg
(Operator)

By ----------

THE UNITED STATES OF AMERICA

By J. H. Earl

Regional Director, Region IV
U. S. Bureau of Mines

U. S. GOVERNMENT PRINTING OFFICE 16—64066-2

MF-202

LANDLORD'S SUBORDINATION AGREEMENT

KNOW ALL MEN BY THESE PRESENTS:

WHEREAS, the undersigned is the owner in fee simple of that certain parcel of ground in the county of Boulder, State of Colorado, described in a certain Exploration Project Contract dated March 17th, 1952, between Joseph M. Smith and Charles R. Rugg, the Lessee of said property, and the United States of America;

NOW, THEREFORE, the undersigned, as Lessor of said property under lease dated November 20, 1951, does by these presents subordinate all of his right, title, and interest under the provisions of said lease to the right, title, and interest of the United States of America under the provisions of said Exploration Project Contract, and agrees that the lien and claim of the United States of America under the provisions of said contract shall be prior to the undersigned's rights to rentals or royalties under the terms of said lease; and

The undersigned further agrees that if said leasehold interest should be surrendered or if said lease should terminate at any time prior to the expiration of the rights of the United States of America under said Exploration Project Contract, the undersigned shall assume and does hereby assume all of the obligations of the Lessee under said Exploration Project Contract to make repayment to the United States of America according to the terms of said contract; and

The undersigned agrees to commit no act, nor assert any claim under judicial process or otherwise that may contravene or conflict with the prior lien and claim of the United States of America under the provisions of said Exploration Project Contract.

This undertaking and covenant shall be binding upon the heirs, successors, and assigns of the undersigned.

Dated this 17th day of March, 1952.

George W Bowdey

U. S. GOVERNMENT PRINTING OFFICE 16-[illegible]582-1

REGIONAL DIRECTOR'S
OFFICE
REGION IV
MAR 17 1952
BUREAU OF MINES
DENVER, COLORADO

EXHIBIT A

Exploration Project

The proposed project consists of repairing the hoist house and headframe, unwatering and rehabilitating the Lower Rambler shaft, sinking the shaft approximately 60 feet, drifting on the vein 300 feet northeast from the 150 foot-level of the shaft, and 215 feet southwest from the 150-foot level of the shaft, and crosscutting 125 feet on the 150-foot level.

The location of the proposed work is shown on Fig. 2 attached.

The location of the Lower Rambler shaft is shown on the attached claim map.

The estimated working time is 12 months.

The following costs are estimated:

Rental of equipment	$1,400.00
Purchase of equipment	305.00
Depreciation of equipment	440.00
Labor, supervision, compensation	16,450.00
Supplies	5,805.00
Total cost of project -	$24,400.00

Fixtures and Improvements

None

Operating Equipment

To be Rented:

Diesel-powered generator at $75.00 per month
Centrifugal pump and motor at $30.00 per month
Pneumatic sump pump at $40.00 per month
Hoisting bucket at $15.00 per month

Estimated total rental - $1,400.00

To be Purchased:

1 Gardner-Denver pneumatic leg for S55 jack-hammer complete	$205.00
1 Used mine car	100.00
Total purchases -	$305.00

Operating Equipment - Cont'd.

To be furnished by operator:

1 Gardner-Denver WH 210, gasoline-powered compressor at $25.00 per month
1 Gardner-Denver S55 jackhammer at $5.00 per month
1 Denver Engineering Company hoist powered by Ford V-8 engine - None
1 1942 Ford dump truck at $10.00 per month

Total estimated depreciation - $440.00

Labor and Supervision

1 Foreman at $2.00 per hour
1 Miner at $1.65 per hour
1 Mucker at $1.50 per hour
1 Hoistman at $1.50 per hour
1 Bookkeeper at $50.00 per month

The above hourly wages are based on an 8-hour day, 5-day week with time and one-half for overtime.

Total estimated labor and supervision -	$15,750.00
Compensation, insurance, payroll taxes	700.00

Supplies

Timber	$535.00
Explosives	1,675.00
Gasoline, Diesel fuel, Oil, Grease	995.00
Drill steel, bits	880.00
Pipe (air, water, pump line)	350.00
Air and water hose	170.00
Track	400.00
Miscellaneous small tools	300.00
Lumber	200.00
Assaying	100.00
Surveying	200.00
Estimated cost of supplies -	$5,805.00

Rehabilitation and Repairs

Repair hoist house	$100.00
Repair head frame	$150.00

A breakdown of these two items is given under labor and supplies.

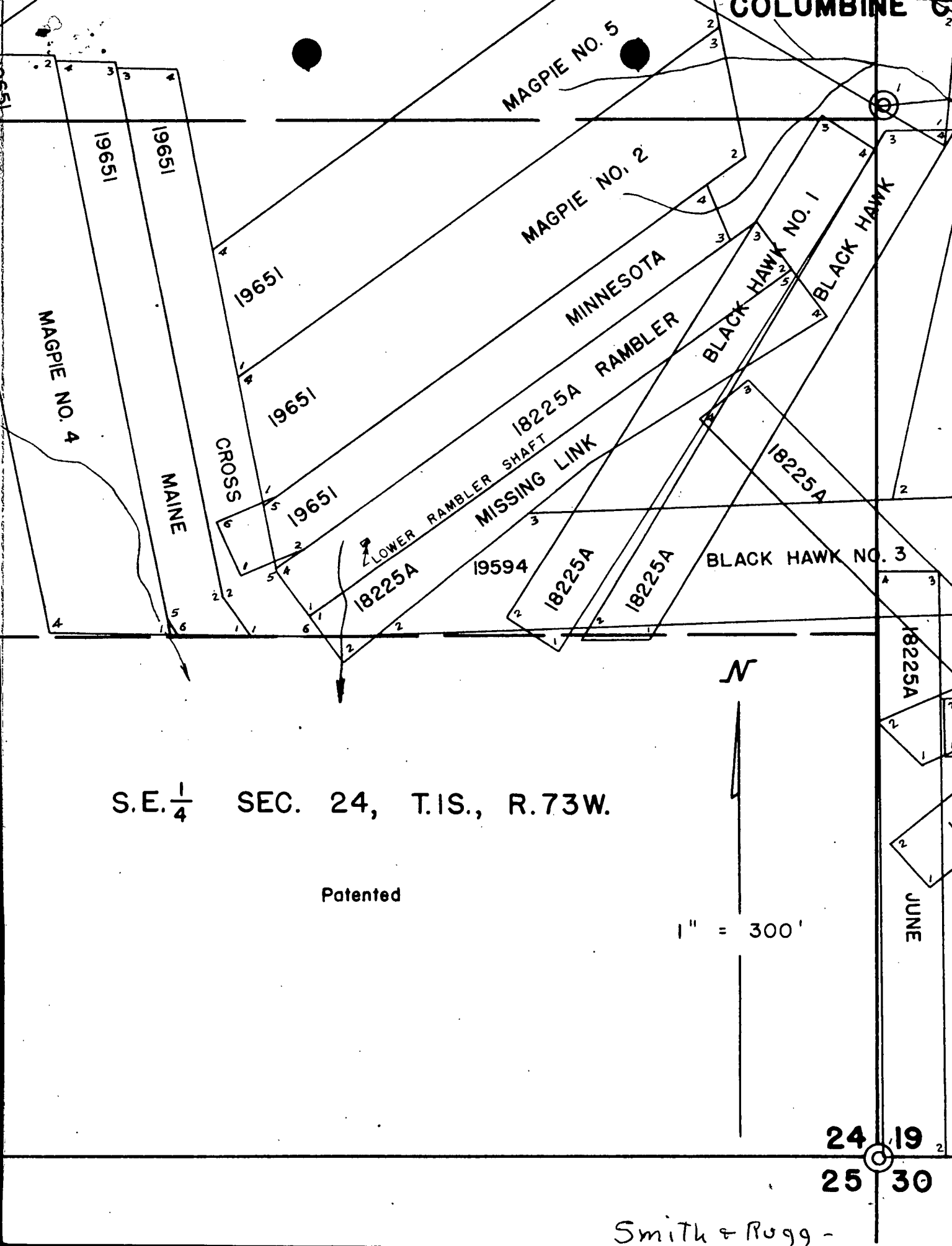
COLUMBINE
MAGPIE NO. 5
MAGPIE NO. 2
MAGPIE NO. 4
1965
MINNESOTA
18225A RAMBLER
BLACK HAWK NO. 1
BLACK HAWK
CROSS
MAINE
LOWER RAMBLER SHAFT
MISSING LINK
18225A
19594
BLACK HAWK NO. 3
JUNE
N
S.E. 1/4 SEC. 24, T.1S., R.73W.
Patented
1" = 300'
24 19
25 30
Smith & Rugg -

LARGE FORMAT DOCUMENTS AT END OF FILE

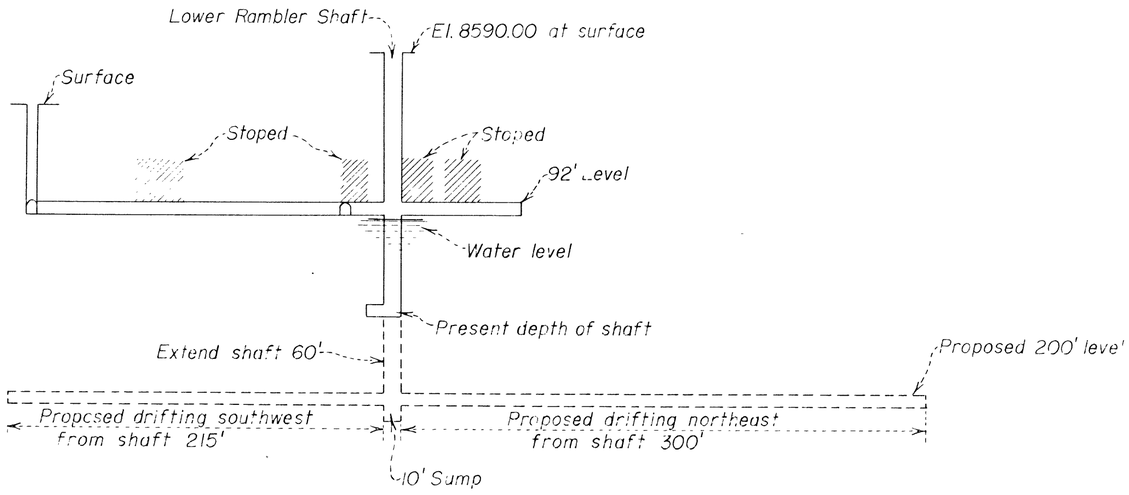

VERTICAL SECTION

SHOWING PRESENT WORKINGS & PROPOSED EXPLORATION OFF THE LOWER RAMBLER SHAFT

60 0 60 120 180

SCALE OF FEET

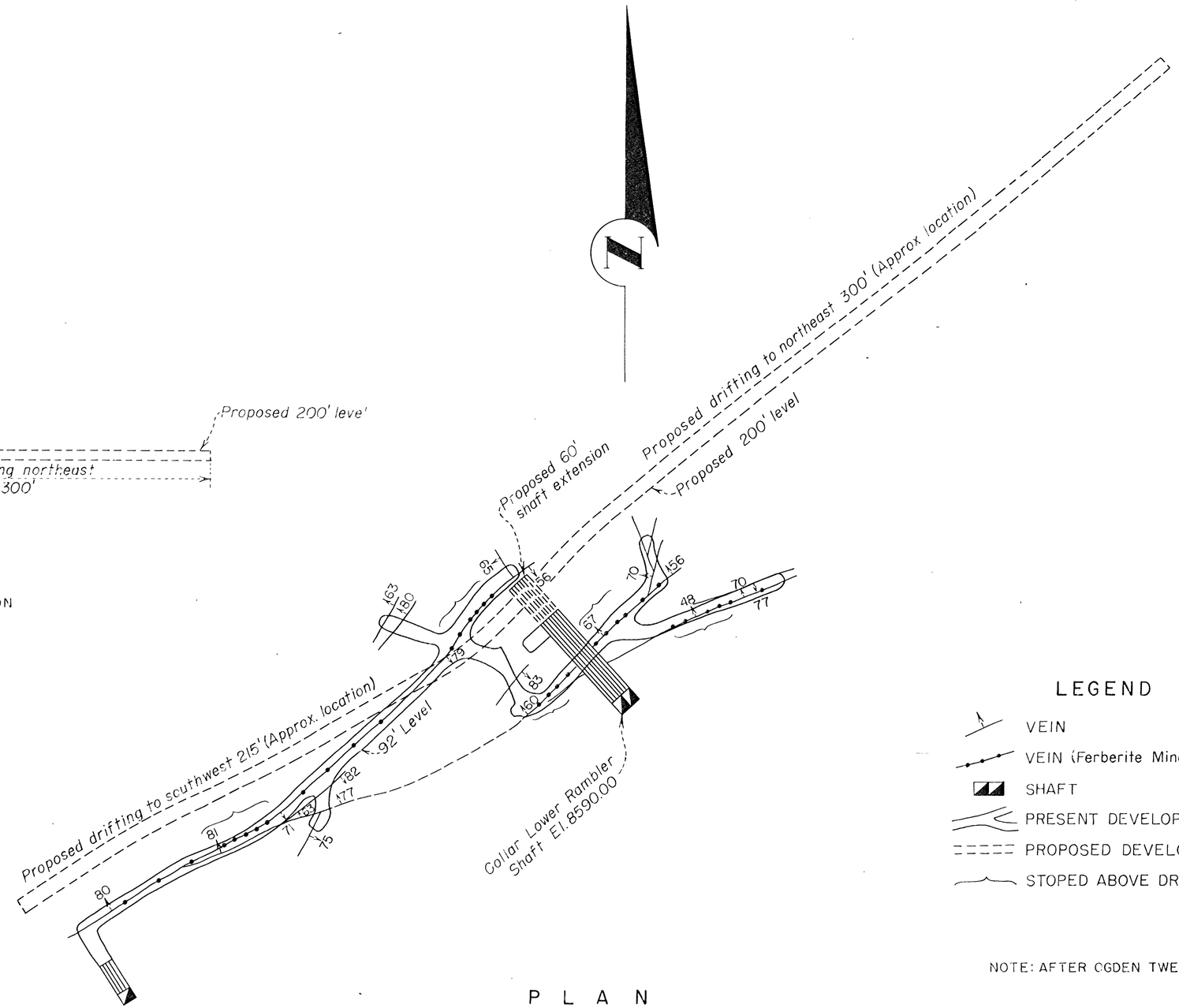

P L A N

(SHOWING PRESENT WORKINGS & PROPOSED EXPLORATION)

30 0 30 60 90

SCALE OF FEET

LEGEND

- VEIN
- VEIN (Ferberite Mineralization)
- SHAFT
- PRESENT DEVELOPMENT
- PROPOSED DEVELOPMENT
- STOPED ABOVE DRIFT

NOTE: AFTER OGDEN TWETO U.S.G.S.

COLORADO BRANCH-MINING DIVISION-REGION IV
BUREAU OF MINES

FIG. 2 – PLAN & SECTION, SHOWING PRESENT & PROPOSED WORKINGS, RAMBLER TUNGSTEN MINE, BOULDER CO., COLO. DMEA 2296