UNITED STATES
DEPARTMENT OF THE INTERIOR
OFFICE OF MINERALS EXPLORATION
WASHINGTON 25, D. C.

MAY 13 1965

Mr. Paul S. Coupey
451 Clarkson
Denver, Colorado 80218

Re: CME-6433 (Fluorspar)
Paul S. Coupey
Fluorite Nos. 1-8 Claims
Jackson County, Colorado

Dear Mr. Coupey:

Careful study of your application for financial assistance in exploring the subject property and of other information available to us indicates that the probability of disclosing significant ore reserves on the property is not sufficiently promising to justify Government participation in the proposed exploration. Accordingly, we regret to inform you that your application for exploration assistance is denied.

Sincerely yours,

George Fumich, Jr.

Acting Director

RMSmith/gla (5-12-65)
cc to: Director's Reading File
Docket
Region III
Review Committee
120M

Bldg. 20, Denver Federal Center
Denver, Colo. 80225

May 7, 1965

Memorandum

To: George C. Selfridge, Chief
Division of Exploration Operations
Washington, D. C. 20240

From: Acting Field Officer, OME, Region III

Subject: OME-6433 (Fluorspar)
Paul S. Coupey
Fluorite Nos. 1-8 Claims
Jackson County, Colorado

This refers to your memorandum dated April 15, 1965 on the subject docket.

I have discussed the subject application with Tom Steven, U.S.G.S. author of Geological Survey Bulletin 1082-F, Geology and Fluorspar Deposits, Northgate District, Colorado. I have also discussed the docket with Russel McClellan and Floyd Everett, U.S.B.M., who know the area from Bureau of Mines work there and helped in the preparation of R.I. 4106, Northgate Fluorspar, Jackson County, Colorado.

The Applicant has many scattered claims. The only claims which could even be considered are the Fluorite 1 and 2 which are postulated to be on the southeast end of the fault running through sec 10, R 79 W, T 11 N, and Fluorite 3 and 8 on the northwest end of the fault. The other claims are rank prospects.

Everett stated that Ozark-Mahoning own all except the tip ends of the fault, and as they mined northwesterly and southeasterly the ore became lower in grade.

It is the consensus of opinion that this application is prospecting and not exploration. I therefore recommend that it be denied without a field examination.

ORIGINAL SIGNED BY

Hugh M. Connors

HMC (5-7-65)
cc: File
Chron

UNITED STATES
DEPARTMENT OF THE INTERIOR
OFFICE OF MINERALS EXPLORATION
WASHINGTON 25, D. C.

APR 1 5 1963

Memorandum

To: Acting Field Officer, Region III

From: Chief, Division of Exploration Operations

Subject: OME-6433 (Fluorspar)
Paul S. Coupey
Fluorite Nos. 1-8 Claims
Jackson County, Colorado

The application for Government assistance in exploring the subject claims is referred to you for review, a field examination if you consider it necessary, and for recommendations.

Much additional information is needed relating mainly to the probability of a discovery, and partly to other items in the application.

In support of 3.(f) the Applicant's reasons for expecting to find ore consist almost entirely of statements gleaned from Steven, T. A., 1960, Geology and fluorspar deposits, Northgate district, Colorado; U. S. Geol. Survey Bull. 1082-F.

The application contains more than adequate evidence that the claims are in an area of favorable geologic settings, but evidence of specific targets is wanting.

We question some of the Applicant's "specific" reasons for expecting to find ore:

Fluorite 1 & 2 claims. - Statements about two outcrops which are quoted in the application may actually be two statements about a single outcrop. If so, it is on Fluorite 2 claim and there is no specific target on Fluorite 1. Moreover, the proposed work seems to be unrelated to the outcrop. Steven is quoted as saying that the whole trend of the vein zone in this area is worth prospecting, so we wonder if the proposed work can be justified as exploration.

Page 107
a pitfalls.
1082F

Fluorite 3 claim. - The quote from Steven (p. 416) actually applies to the Fluorite 8 claim, as does the quote from Cox (p. 12). The quote from Steven (p. 402) is out of context, and the 23 outcrops visually inspected are irrelevant. Part of the proposed work is in unfavorable host rock.

The E branch would be "prospecting"

Fluorite 4 & 5 claims. - Fluorite is reported in float only. Steven (p. 417) reports that this vein is not favorable for fluorspar ore bodies.

Fluorite 6 & 7 claims. - The "gneiss complex" is equated in the application to the "Sherman granite" which does not crop out on either of the claims. The gneiss complex mapped by Steven (Bull. 1082, pl. 15) is not differentiated into favorable quartz monzonite gneiss and unfavorable hornblende-biotite gneiss.

Look on Pl. 45 USGS. PP 274 M.

Fluorite 8 claim. - The Applicant's reason for testing the contact of the intrusive quartz monzonite with the White River formation is not clear. No outcrops of fluorite are mentioned although a "discovery" is illustrated.

If you recommend a contract, other items in the application that need clarification or additional information are:

1.(c) Financial statement from the Applicant should be obtained.

2.(a) One copy of the Applicant's agreement with Western Fluorite should be obtained.

2.(b) The validity of the claims should be ascertained. Three of the four pairs of claims (1 and 2, 4 and 5, 6 and 7) have only one discovery pit for two claims. The sketch of the location of claims 3 and 8 with respect to the section corner illustrates a geometric impossibility; either the bearings or the distances are wrong. Part of claim 8 may overlap part of the pre-existing Camp Creek No. 1 claim, but there is no mention of this in the application.

5.(a) All of the drilling is to be parallel with and in the veins. This appears to us to be ill-advised and indicative of inexperience.

The Applicant's reasons for trenching several feet into the bedrock, thereby increasing the costs, are not clear. Could some of this rock work be eliminated?

5.(c) The anticipated rate of drilling of 11 holes 100 feet deep per month seems to be too low.

7.(a) The bid for non-core drilling at $8.00 per foot seems to us to be high, although mobilization and demobilization costs are included.

7.(b) The rate for the outside consultant is more than we commonly allow, and his time for 1/3 of the working days seems extravagant. Supervision would not ordinarily be a consultant's job. However, full-time supervision should be provided.

7.(g) Analytical work is to be contracted. The bidder has bid on both CaF_2 and SiO_2 assays, but the Applicant has allowed only for the cost of CaF_2 assays. According to Warne (R.I. 4106, p. 6) the amount of silica varies greatly at the various deposits.

You may wish to discuss the application with Tom Steven, U. S. Geological Survey, Denver.

George C. Selfridge

April 2, 1965

Note: to the Files.

This property is the subject of RI 4106.

Russ McCellan worked with John D. Warne (author of RI 4106) and would be a good information source regarding this property.

Floyd Everett actually wrote RI 4106 although Warne's name is on the cover.

Ozark-Mahoney worked this property during the war into 1957 when the property was shut down due to low fluorspar prices. The shaft area is now reported to be part of an open pit. The shaft was sunk by the USBM and it is also reported that all reserves blocked out have been mined.

PJR

2. (a) I, Paul S. Coupey, am the sole owner of Fluorite Claims # 1 - 8, as further described in section 2. (b), subject to no liens or other encumbrances.

Fluorite # 1 & 2

2. (b)

Legal Descriptions

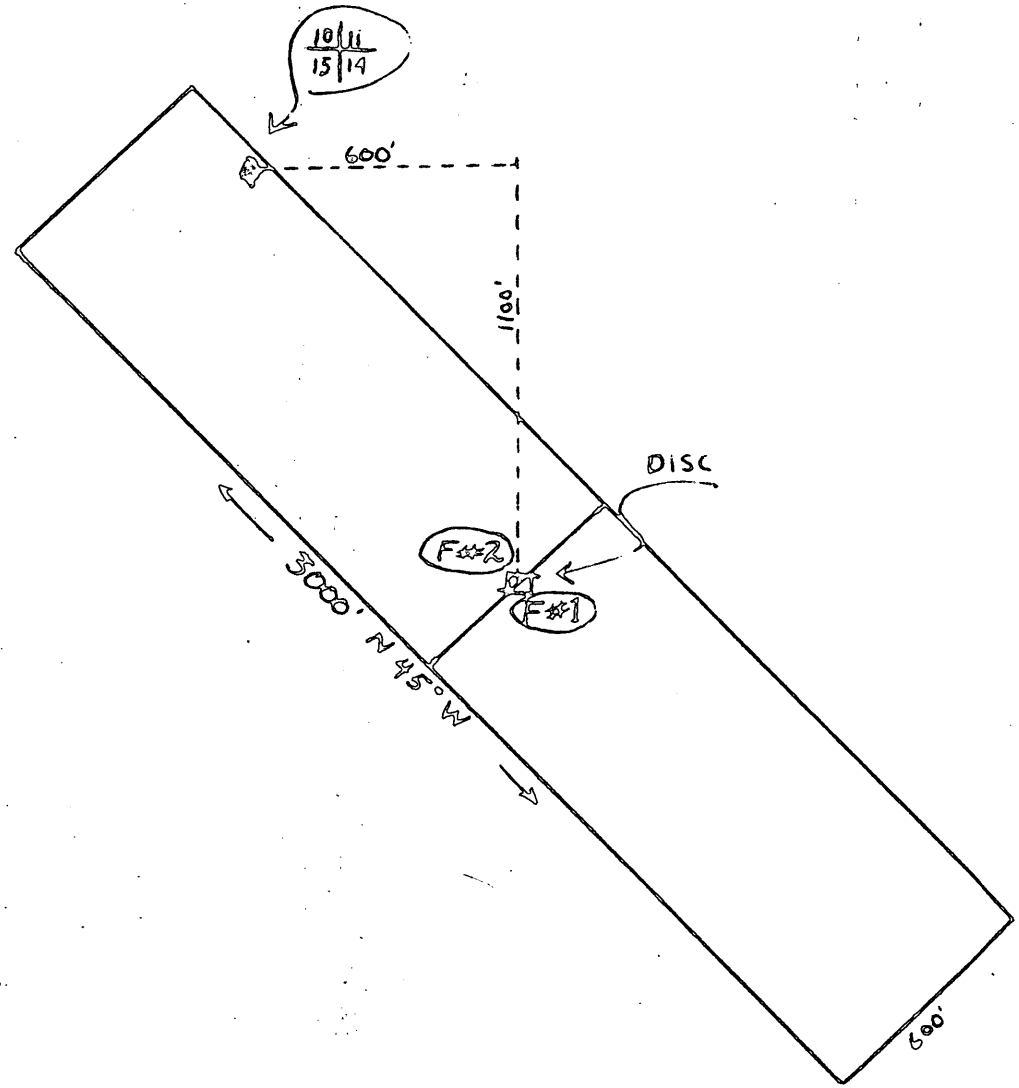

Fluorite # 2:

SE¼SE¼ section 10
NW¼NW¼ section 14
NE¼NE¼ section 15, T 11 N, R 79 W, 6th P.M.

Jackson County, Colorado.

Recorded County Clerk's Office, Walden Colorado.

Book 81, Page 355.

Fluorite # 1:

NW¼ section 14, T 11 N, R 79 W, 6th P.M.

Jackson County, Colorado.

Recorded County Clerk's Office, Walden, Colorado.

Book 81, Page 354.

2. (b) Legal Descriptions.

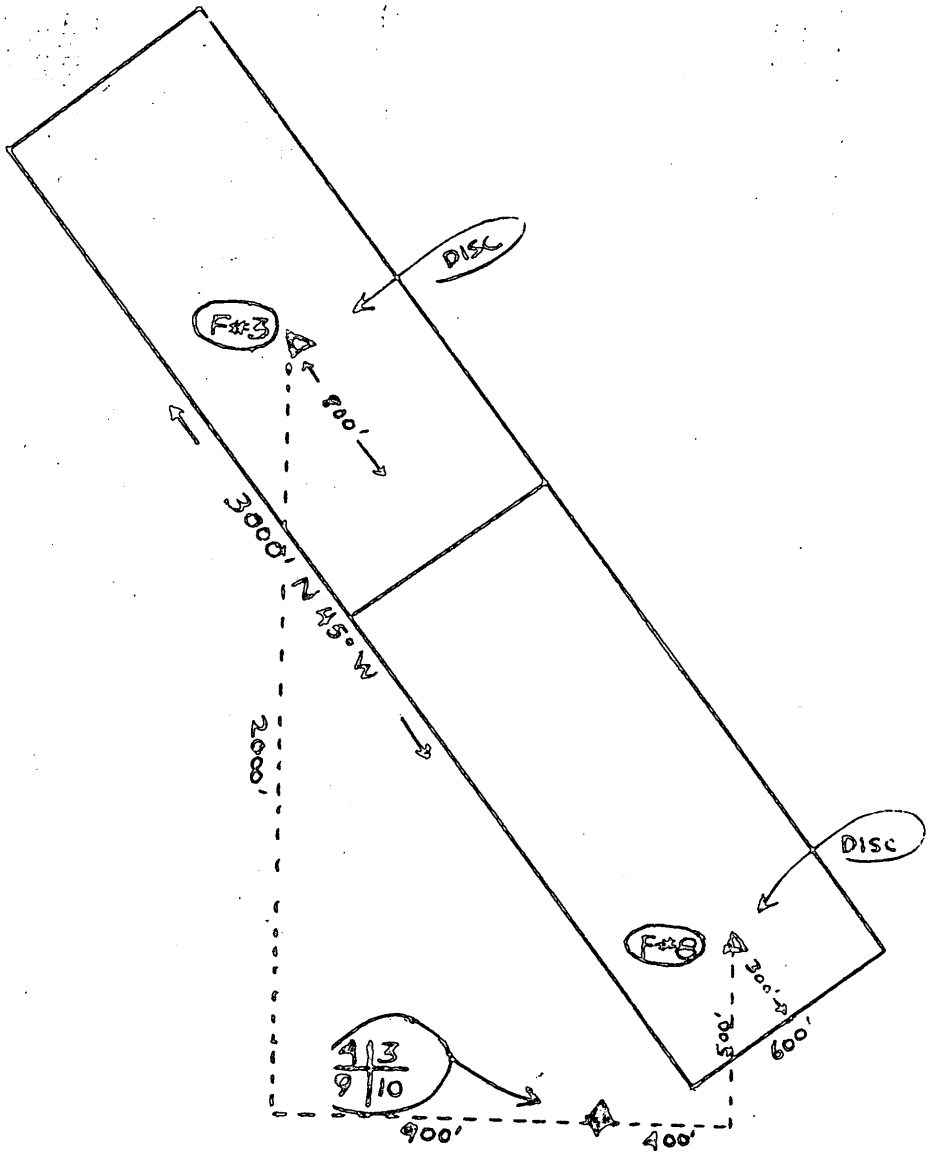

Fluorite # 3:

N½ SE¼ section 4, T 11 N, R 79 W, 6th P.M.

Jackson County, Colorado.

Recorded County Clerk's Office, Walden, Colorado.

Book 81, Page 356

Fluorite # 8 :

E½ SW¼ section 4,

SW¼SW¼ section 3, T 11 N, R 79 W, 6th P.M.

Jackson County, Colorado.

Recorded County Clerk's Office, Walden, Colo.

Book 82, Page 146

2. (b)

Legal Descriptions.

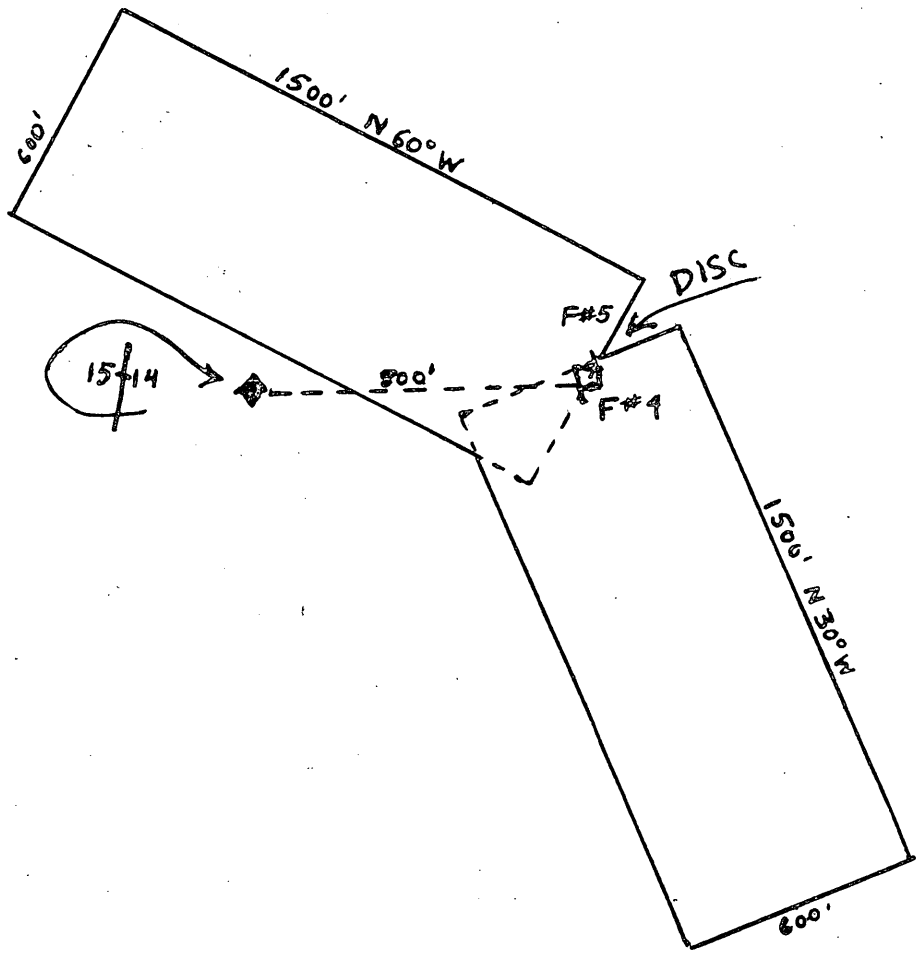

Fluorite # 5:

SW¼NW¼ section 14

SE¼NE¼ section 15, T 11 N, R 79 W, 6th P.M.

Jackson County, Colorado.

Recorded in County Clerk's Office, Walden, Colorado.

Book 82, Page 147.

Fluorite # 4:

SW¼ section 14, T 11 N, R 79 W, 6th P.M.

Jackson County, Colorado.

Recorded in County Clerk's Office, Walden, Colorado.

Book 82, Page 148.

2. (b)

Legal Descriptions:

Fluorite # 7:

W½ section 13, T 11 N, R 79 W, 6th P.M.

Jackson County, Colorado.

Recorded County Clerk's Office, Walden, Colorado.

Book 82, Page 150.

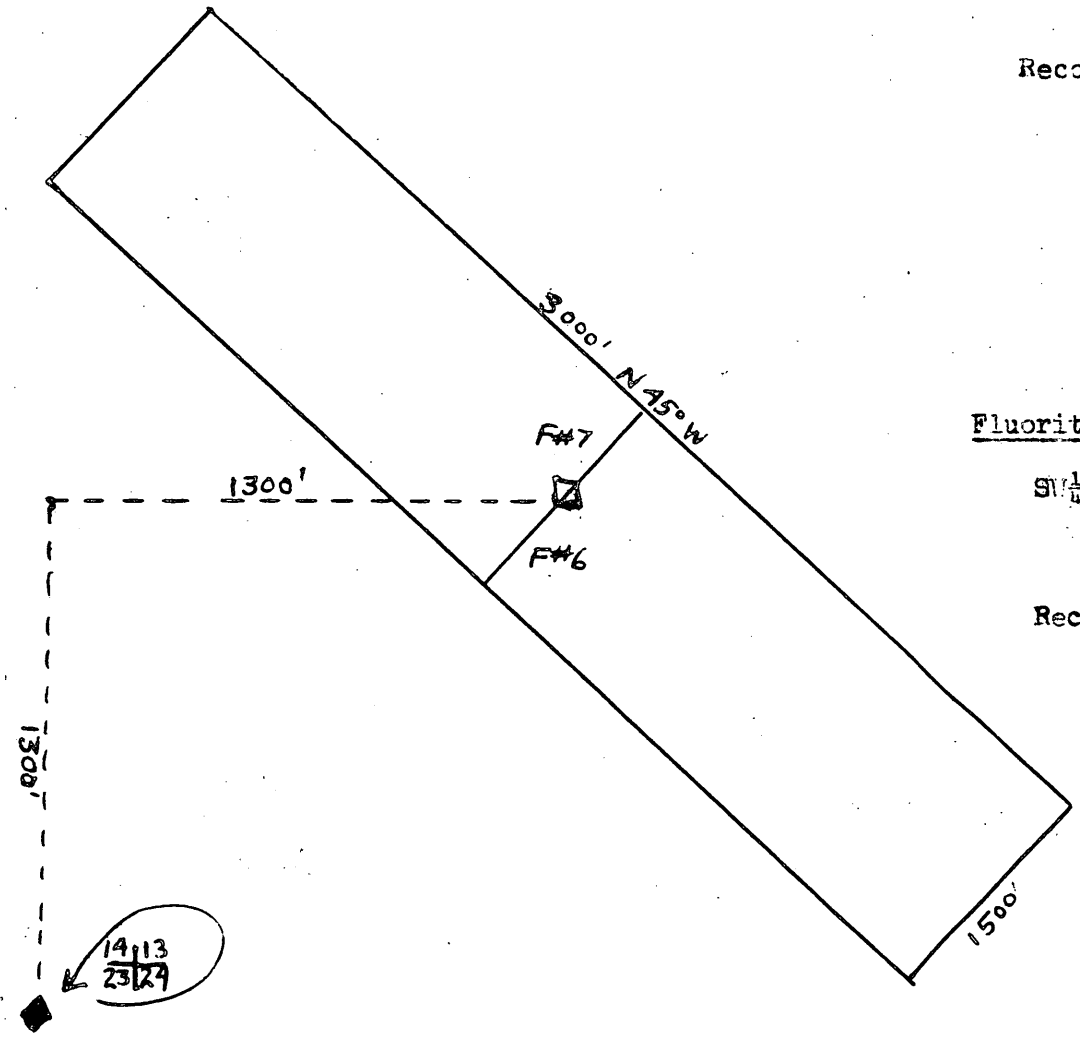

Fluorite # 6:

SW¼ section 13, T 11 N, R 79 W, 6th P.M.

Jackson County, Colorado.

Recorded County Clerk's Office, Walden, Colorado.

Book 82, Page 149.

2. (c) Not applicable.

ANDERSON DRLG. CO.
1163 WASHINGTON
DENVER, COLORADO

This bid is firm through December 1st, 1965.
Drilling to commence within 20 days of notification, and be completed within 100 days of commencement.

Price per foot:

Cored with 97% recovery over full hole- . . . . . $ _____

OR

Reverse circulation with cuttings & sludge collected every foot. . . . $ 8.00

TRUE COPY

s/ Steven W. Anderson
Authorized signature

Title

Please return this bid together with a copy of the drilling contract form in use by your company. Thank you for considering this contract.

Paul S. Coupey

BEST BID ON REVERSE CIRCULATION

3. (a)

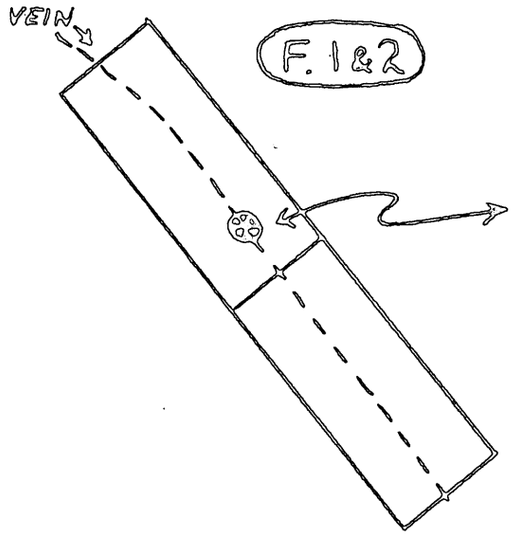

"... an outcrop of fault breccia about 10 feet in diameter contains an estimated 30 to 40 percent fluorspar. This exposure is about 600 feet lower in altitude than the original outcrop of the vein zone near the old Baker pit. It would thus seem that the whole trend of the Fluorine-Camp Creek vein zone southeast of the Fluorine mine nearly to the bottom of Lawrence Creek valley is worthy of prospecting..." U.S.G.S. Bulletin1082-F, page 416

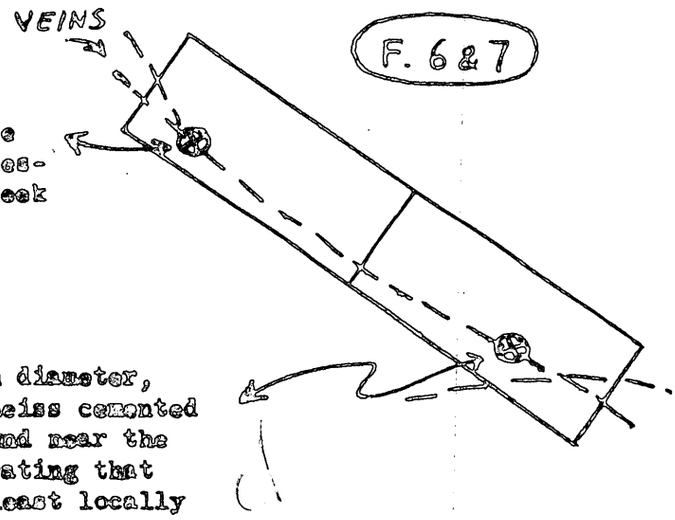

Several small boulders up slope on north side of Pinkum Creek show quartz monzonite with fluorite veinlets indicating a fluorescence comparable with ores at the Camp Creek mine.

"One loose boulder, 3 to 4 feet in diameter, of brecciated quartz monzonite gneiss cemented with crustified fluorspar was found near the southeast end of the fault, indicating that some fluorspar was deposited at least locally along it." U.S.G.S. Bulletin 1082-F, page 417.

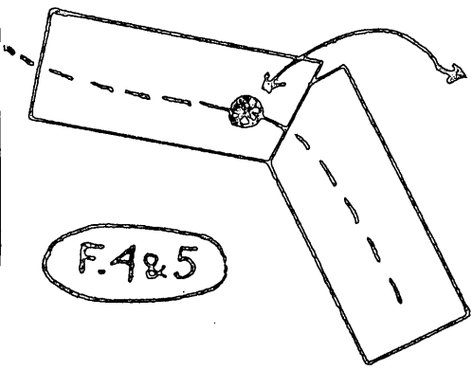

Considerable fluorescence observed in float rocks in immediate vicinity of fault zone approximately 300 ft up slope northwest of the access road.

3. (f) Reasons for expecting to find ore.

General:

1) Proximity to major deposits;
2) mineralization on the properties to be explored;
3) extensions of principal Tertiary faults, cutting
4) hard, competent, granitic rock.

"Fluorspar was deposited in or adjacent to open spaces along late Tertiary (?) faults, and the larger bodies of ore are localized where the fractures were most abundant or open. A major controlling factor was the competency of the wallrock; hard rocks in which open fractures could be maintained were favorable hosts, whereas soft rocks in which the fractures were tight are commonly virtually barren of fluorspar. Intrusive quartz monzonite was a favored host, and most of the higher-grade deposits have this rock on one or more of the walls. Quartz monzonite gneiss also was relatively favorable, particularly where the mineralized fractures cut the foliation at high angles... along the Fluorine-Camp Creek vein zone." Steven, USGS Bull.1082-F, p.401

"All commercial fluorspar mined in the Northgate district has come from the younger (Tertiary) fluorspar deposits. Ore shoots are located where the enclosing faults cut hard competent granitic rocks." Steven, Wyo'53 Guidebook p.110

"The best opportunities for developing new ore bodies at or near the surface seem to be along the Fluorine-Camp Creek vein zone. Geologically there is no reason why fluorspar with widths and grade comparable to those exposed in Ozark-Mahoning Co. cuts should not occur along the northwestern part of the vein zone where it traverses intrusive quartz monzonite or quartz monzonite gneiss... The intervening segments of the fault are largely covered by a thick mantle of surficial debris, and surface indications of fluorspar are negligible. It would seem, however, that all of the areas along the fault zone where favorable granitic rocks constitute the walls are worthy of testing."
Steven, USGS Bull.1082-F, p.415-16.

Specific:

Fluorite 1 & 2 Claims: Southeastern section of the Fluorine-Camp Creek vein: 1300 feet of intrusive quartz monzonite, 600 feet of gneiss complex, and 1100 feet of White River.

"The greater displacement along the Fluorine-Camp Creek fault produced a persistent zone of breccia ranging from 10 to nearly 70 feet in width." (ibid p.402)

"... an outcrop of brecciated intrusive quartz monzonite along the southeastern part of the vein zone near the bottom of Lawrence Creek valley exposes a good showing of fluorspar.." (ibid p.407)

"... an outcrop of fault breccia about 10 feet in diameter contains an estimated 30 to 40 percent fluorspar. This exposure is about 600 feet lower in altitude than the original outcrop of the vein zone near the old Baker pit. It would thus seem that the whole trend of the Fluorine-Camp Creek vein zone southeast of the Fluorine mine nearly to the bottom of Lawrence Creek valley is worthy of prospecting..." (ibid p.416)

For merits of White River sections (1100 feet, see evaluation under Fluorite #8)

Fluorite 3 Claim: Eastern fault branch of northwestern end of Fluorine-Camp Creek vein zone: 900 feet of intrusive quartz monzonite, 400 feet of gneiss complex, and 600 feet of pegmatite.

"The eastern branch fault has been virtually untested, although it appears to have intrusive quartz monzonite or quartz monzonite gneiss on at least one wall for about 1500 feet northwest of the fault junction." (ibid p.416)

"The greater displacement along the Fluorine-Camp Creek fault produced a persistent zone of breccia... across the top of Pinkam Mtn... averaging 20 ft." (ibid p.402)

"It strikes north and apparently dips steeply. The fluorspar vein is as much as 8 feet wide." (Cox, USGS Prelim Rpt 3-220, p.12)

Even the "less favorable" sections of the fault extending through "gneiss complex and pegmatite" lie less than 700 ft from 23 outcrops of mineralization in the same formations along the western branch of the fault. (Visual inspection Camp Creek #3 Claim)

Fluorite 4 & 5 Claims: 3500 feet of Tertiary fault cutting intrusive quartz monzonite and miscellaneous gneiss complexes, into White River sediments across the bottom of Lawrence Creek valley.

On the old Hankins and Follett claims it contains: "Coarse cleavable fluorite and calcite veinlets a few inches wide..." (ibid p.12)

For merits of White River section (1000 ft), see evaluation under Fluorite #8.

Fluorite 6 & 7 Claims: 3000 ft of Tertiary faulting, including a highly favorable junction of faults at both extremities (northwest and southeast), most in gneiss complexes ("Sherman Granite") with some White River. (This fault may be an extension of Fluorine-Camp Crk fault).

"Sherman granite was the most favored host rock and formed the walls of most of the ore bodies that have been mined to date." Steven, Wyo. 1953 Guidebook, p.110 (Includes geologic map "Sherman Granite")

Fluorite 8 Claim: Mostly intrusive quartz monzonite with a White River sedimentary cover across the southern portion.

Refering to the Fluorine-Camp Creek fault in general, Cox states "The Tertiary rocks have been faulted against the pre-Cambrian granite and are mineralized with fluorspar." (Cox, USGS Prelim Rpt 3-220, p.11)

Refering to underground workings at the Fluorine mine, "Tertiary arkosic conglomerate and sandstone are cut by many small faults and are slightly mineralized throughout the full length of the crosscut at the 50 ft level. The average grade on this level is 17.5% CaF_2. About 15 ft northeast of the center of the shaft a 5 ft section contains 55.5% CaF_2." (ibid p.11)

"Fluorspar along the Fluorine-Camp Creek vein zone... occurs largely as lacing veinlets cementing fine-grained fault breccia, and as earthy aggregates replacing and impregnating the gougy matrix of the breccia and the associated White River rocks... The fluorspar in the White River rocks in part fills fractures, and in part impregnates and cements the arkosic and ashy beds...
Sparse veinlets of chalcedony fill fractures in the fluorspar and line some of the cavities; it appears more abundant in mineralized White River formation...
The White River rocks, although soft and incompetent, were favorable host rocks, especially where they overlie the hard granitic rocks; the White River tended to become impregnated rather than veined by fluorspar, however, and fracture control was less important." (Steven, USGS Bull. 1082-F p.400-1)

3. (g)

No private formal reports prepared on the Eastern vein zones of the Northgate Fluorspar deposits. The following bibliography of governmental reports is complete and all volumes should be readily available:

* * *

Cox, D.C., 1945, General features of Colorado Fluorspar deposits:
Colo. Sci. Soc. Proc. v.14, no.6, p.263-285.

Cox, D.C., et al, 1948, Fluorspar deposits in the Northgate District:
U.S.G.S. Strat. Min. Inv. Prelim. Rpt. 3-220

Montagne, John de la, 1953, Late Tertiary Normal Faults of the Park Range:
8th Annual Guidebook, Wyo. Geol. Assoc. & Wyo. Univ.

Steven, T.A., 1953, Geology of the Northgate Fluorspar District, Colorado
8th Annual Guidebook, Wyo. Geol. Assoc. & Wyo. Univ.

Steven, T.A., 1954, Geology of the Northgate Fluorspar District, Colorado:
U.S.G.S. Min. Inv., Field Studies Map 13

Steven, T.A., 1960, Geology and Fluorspar Deposits, Northgate District:
U.S.G.S. Bull. 1082-F

Warne, J.D., 1947, Northgate Fluorspar, Jackson County, Colorado
U.S.B.M. Rpt. Inv. 4106.

These last two reports are the most significant, the former being a complete review and analysis of all data developed up to 1960 by the man most familiar with all aspects of the area, and the latter consisting of the reults obtained by Bureau of Mines and private drilling and trenching between 1944 and 1946.

4. (a) To visit Fluorite properties or to obtain any information concerning them, contact:

Paul S. Coupey
451 Clarkson,
Denver, Colorado 80218

Telephone number PE 3 - 7416

Properties are located on both sides of State Hiway 127, at Camp Nelson, Colorado. See ~~topographic~~ map with plat of claims under section 5. (a) hereinafter for exact location of claims in relation to access roads.

All locations within the claims described in this application are accessible to vehicles, or within 300 ft of such access.

Fluorite # 1 & 2

7 cuts approx. 50 ft long & 12 feet deep to locate and test fault zone.

- 28 assays run on material from cuts.

14 reverse circulation drill holes 100 ft deep to test vein at depth.

- cuttings collected every foot.

- 168 assays run on drill cuttings.

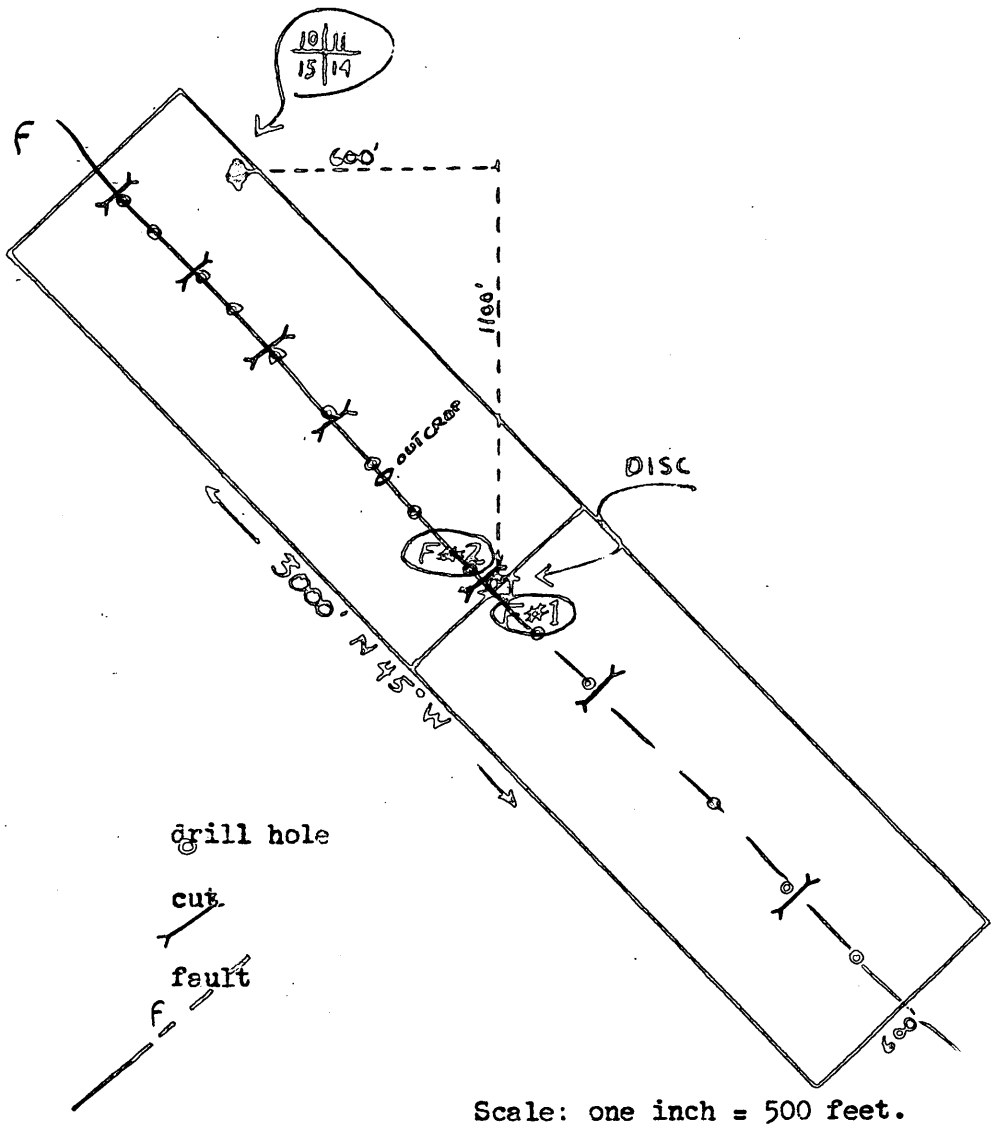

Scale: one inch = 500 feet.

(Note on Cuttings:

Being rotary-percussion, these cuttings should be large enough to retain their mineral identity, as distinguished from the usual "sludge".

Being reverse circulation, these cuttings should be 99% free of up-hole contamination.)

Fluorite # 3 & 8

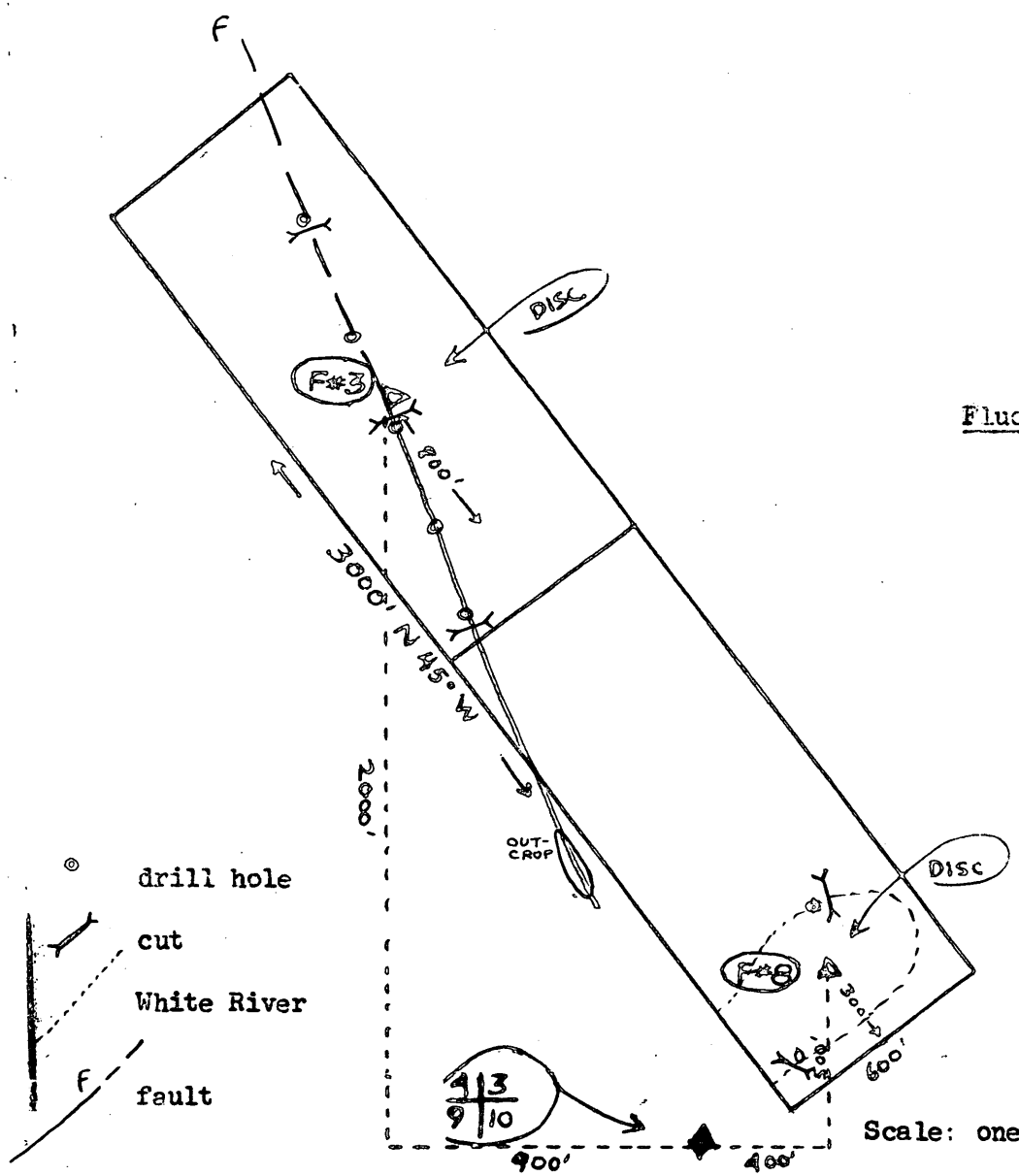

Scale: one inch = 500 feet.

Fluorite # 3:

3 cuts approx. 50 feet long and 12 feet deep to locate and test the fault-vein zone.

- 12 assayd run on material from cuts.

5 reverse circulation drill holes 2" diameter or greater 100 feet deep to test vein at depth.

- cuttings collected every foot.
- 60 assays run on drill cuttings.

Fluorite # 8:

2 cuts approx. 50 feet long and 12 feet deep to test mineralization in White River and at contact with intrusive quartz monzonite.

- 8 assays run on material from cuts.

2 reverse circulation drill holes 2" diameter 100 feet deep to test White River and/or intrusive quartz monzonite at depth.

- cuttings collected every foot.
- 24 assays run on drill cuttings.

2 cuts approx. 50 feet long and 12 feet deep to locate and test fault zone.

- 8 assays to be run on material from cuts.

4 reverse circulation drill holes 2 inch diameter or larger, 100 feet deep, to test fault-vein at depth.

- cuttings collected every foot.
- 48 assays to be run on cuttings from drill holes.

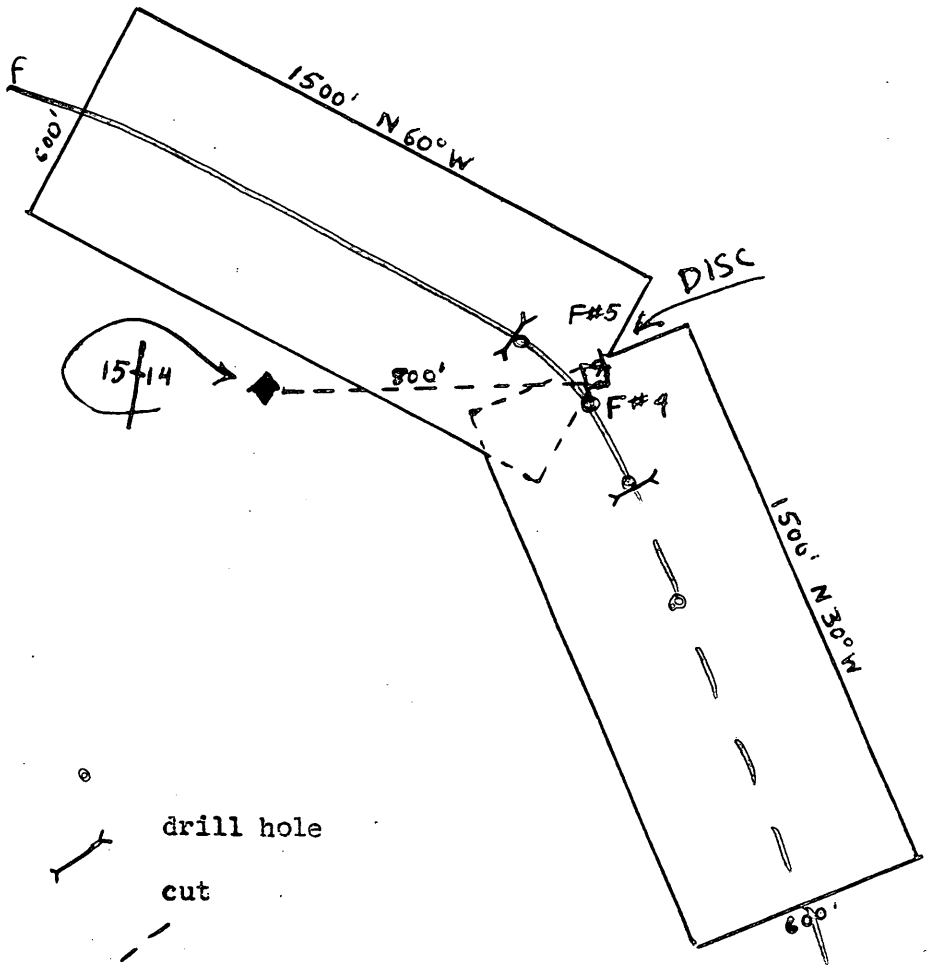

drill hole

cut

F fault

Scale one inch = 500 feet

6 cuts approx. 50 feet long and 12 feet deep to locate and test the fault zone, especially near junction of faults.

- 24 assays to be run on material from cuts.

8 reverse circulation drill holes 2" diameter 100 feet deep to test fault-vein zone at depth.

- cuttings collected uncotaminated at every foot depth.
- 96 assays to be run on drill cuttings.

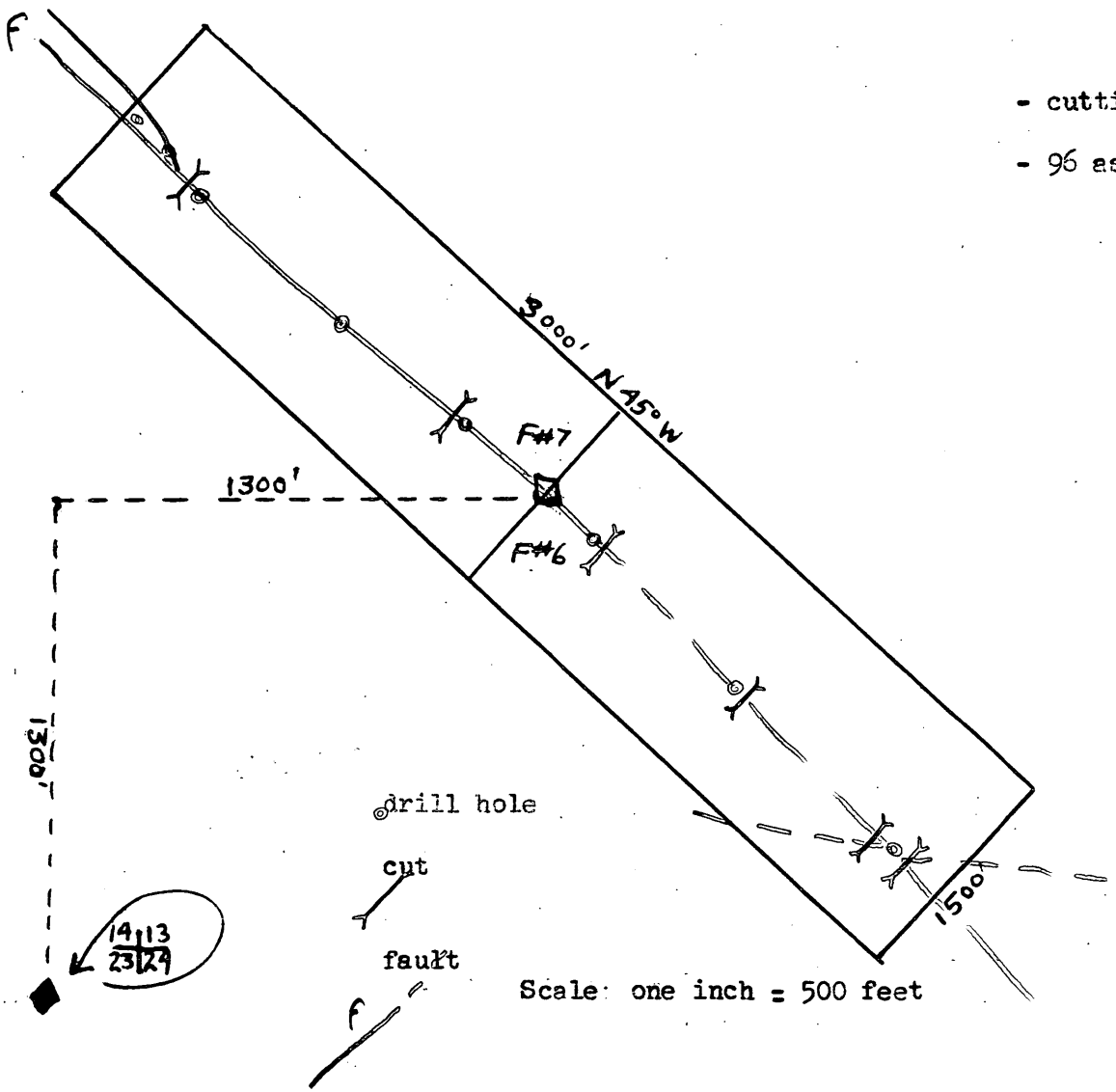

UNITED STATES
DEPARTMENT OF THE INTERIOR
OFFICE OF MINERALS EXPLORATION
WASHINGTON 25, D. C.

APR 15 1965

Mr. Paul S. Coupey
451 Clarkson
Denver, Colorado 80218

Re: OME-6433 (Fluorspar)
Paul S. Coupey
Fluorite Mes. 1-8 Claims
Jackson County, Colorado

Dear Mr. Coupey:

Thank you for your letter of April 9, 1965, with enclosures. We have now referred the application to Mr. H. M. Conners, Acting Field Officer, Office of Minerals Exploration, Region III, Bldg. 20, Federal Center, Denver, Colorado 80225. The Regional Office will notify you in case additional information concerning the application is needed.

Your suggestion that a checklist of factors to be considered in a field examination be made available in advance to the property owners is appreciated. Other than the application form, the OME does not have a checklist as such, although the booklet "Exploration Assistance" covers most of the questions that have been raised by the applicants and is available in advance.

Sincerely yours,

(signed) FRANK E. JOHNSON

Acting Director

RMSmith/mm
Rewritten:
GCSelfridge/mm 4/15/65
cc: Director's Reading File
✓Region III w/cys of incoming ltrs dated 4/6 and 4/9 and enclosures
Docket

Paul Schuyler Coupey

TELEPHONE
AREA CODE 303
733-7416

451 CLARKSON STREET
DENVER, COLORADO 80218

April 6th, 1965

Mr. George C. Selfridge, Chief
Division of Exploration Operations
Office of Minerals Exploration
U. S. Department of the Interior
Washington 25, D. C.

Re: OME-6433 (Fluorspar)

Dear Mr. Selfridge:

I hope the enclosed material will meet with your approval. I regret the hold up in the processing of the application.

Three more bids on the 20 proposed cuts are enclosed, plus two more bids on the drilling. The biggest problem in evaluating the bids on drilling is that hardly any answered according to specifications and I do not want to embark upon a drilling program whereby the drilling contractor is not contractually obligated to perform satisfactorily: poor core recovery would be worthless.

On the matter of the 20 cuts, no one appears overjoyed at the prospects of having to use a bulldozer in that area. Mr. Ted Ranger, Beco Equipment Co., Denver, says they absolutely will not send a dozer into the North Park area, even at double rates, due to abnormal wear and tear from rocks.

From the illustrations on pages 391-392, USGS Bull 1082-F, you can see what a cross section in the cuts will look like. These cuts are necessary in order to calculate the exact location (dip and strike) of the fault zone so as to not waste expensive drill holes wildcatting for the location. This will necessitate removing not only all the fractured quartz material "approximately in place" at the contact with the alluvium and boulders, but going a few feet into solid rock in place. Essentially this is a mining operation.

According to Mr. Anderson, on his reverse circulation drill holes, he plans to drill 6" surface several feet into bedrock, cement 4" casing, and drill a 2½" hole to TD, unless excess caving in the fractured fault zone requires a larger hole. In such a case he will then attempt a 3½" hole through the same casing. If this fails, "he will worry from there". Incidentally, he indicates that by regulating pressure and drilling rate he believes he