E-1108

For royalty payment of $710.12, dated 1/26/66 see transmittal letter file.

For royalty payment of $984.49, dated 1/26/66 see transmittal letter file.

E-1108

For royalty payment of $675.87, dated 1/24/66 see transmittal letter file

E-1108

For royalty payment of $778.76, dated 1/17/66 see transmittal letter file

E-1108

For royalty payment of $2,385. dated September 10, 1965, see transmittal file folder.

E-1108

For royalty payment of $1,432.33, dated July 9, 1965, see transmittal letter file.

OFFICE OF MINERALS EXPLORATION
CONTRACT ADMINISTRATION AND AUDIT DIVISION

ROYALTY AUDIT CERTIFICATE

I have examined the production records and sales documents pertaining to the sale of lead concentrates for the period April 19, 1964, through February 28, 1965, of

Clayton Silver Mines
Sunshine Star Route
Kellogg, Idaho

produced from the Clayton Mine located in Custer County, Idaho, on which royalty is payable to the U. S. Government under terms of Contract Idm-E1108, Docket DMEA-4659 (Lead-Zinc), dated July 19, 1957, as amended.

My examination was made in accordance with generally accepted standards applicable in the circumstances.

The audit established the total proceeds from concentrates subject to Government royalty during the period April 19, 1964, through February 28, 1965, to be $254,714.90. Royalty due to the Government at the rates specified in the contract is $12,735.75.

A prior audit report dated May 4, 1964, found the sales subject to Government royalty during the period July 19, 1957, through April 18, 1964, to be $547,975.08 which added to the proceeds for the subsequent period make a total of $802,689.98 as of February 28, 1965. The royalty account of this project as of April 18, 1964, was:

Total Royalty Payable	$27,398.76
Total Royalty Paid	27,396.24
Balance of Royalty Due	$ 2.52

As of February 28, 1965, the royalty account of this project was found to be:

Total Royalty Payable	$40,134.51
Total Royalty Paid	40,134.51
Balance of Royalty Due	$ -0-

C. E. Fisher

C. E. Fisher, OME Auditor

June 10, 1965

OFFICE OF MINERALS EXPLORATION
CONTRACT ADMINISTRATION AND AUDIT DIVISION

ROYALTY AUDIT REPORT

I. INTRODUCTION

On June 2, 1965, an audit was made of the production, sales, and royalty accounts and records of

Clayton Silver Mines
Sunshine Star Route
Kellogg, Idaho

pertaining to the sale of lead concentrates during the period March 1964 through February 1965, produced from property referred to as Clayton Mine located in Custer County, Idaho, on which royalty is payable to the U. S. Government under the terms of Contract Idm-E1108, Docket DMEA-4659 (Lead-Zinc), dated July 19, 1957, as amended.

The general books of the Operator are maintained by Arthur Riecke, certified public accountant, of the firm of H. F. Magnusson & Co., Scott Building, Wallace, Idaho. The production and sales records are kept by Norman M. Smith, the Operator's general manager, in his office on Sunshine Star Route, Kellogg, Idaho. Mr. Smith made all of his records freely available for the purpose of this audit. Such records were deemed to be adequate and it was not considered necessary to consult the general books nor to visit the mine office during this audit.

II. GENERAL INFORMATION

In accordance with Article 6, Annex I, and Amendment No. 2 of the contract, royalty is payable by the Operator, as principal if the producer or as surety if not the producer, on all minerals produced from the land described in Article 2 of the contract and on any minerals transported through any workings driven under the contract, for a period of 11 years from the date of the contract or until the total net amount contributed by the Government without interest is fully repaid, whichever occurs first. A Report of Review in lieu of final cost audit dated September 15, 1960, indicated accepted costs under the exploration contract amounting to $129,260.40 with the Government's contribution, on a 50 percent basis, being $64,630.20.

The land referred to in Article 2 of this contract consists of 5 patented mining claims in T. 11 N., R. 17 E., B.M., namely, Camp Bird, Camp Bird No. 2, Camp Bird No. 4, Discovery No. 1, and Discovery No. 3, excluding ore bodies above the sill of the 500 level known to exist on the date of the contract.

This Operator is exploring for silver under Contract 14-23-090-2177, Docket OME-6324, dated December 2, 1963. The land subject to this OME contract consists of 6 patented lode mining claims, namely, Camp Bird Nos. 2, 3, and 4, Galena Nos. 5 and 6, and Discovery No. 3, excluding known ore shoots lying above the 800 level of the Clayton Mine. Mr. Smith advised that there has not been any production to date which would be subject to royalty under this OME contract.

This Operator qualified for and received stabilization payments under Public Law 87,347 applicable to production sold during the period January 1962 through July 1963 in the amount of $65,189.96, but was found to be ineligible for stabilization payments on production sold subsequent to July 1963. The stabilization payments were apportioned between production subject to royalty and that not subject to royalty on the same basis as the original smelter returns were allocated.

III. SCOPE OF AUDIT AND FINDINGS

A considerable amount of preaudit work was accomplished in the OME offices, Washington, D. C., and Spokane, Washington, prior to the field audit. During this preaudit work a tabulation of royalty paid by the Operator was prepared from copies of monthly statements furnished by the Operator in support of royalty payments. All of the data included in the statement was confirmed and verified with records of deposits. It was also verified with the Operator's underlying records during the on-site audit. The tabulation is filed as a part of my audit work papers.

This audit disclosed that the manner of record keeping and computing royalty described in my audit report dated July 6, 1961, was continued during the period under review.

The balance of royalty due amounting to $2.52 as shown in my audit report dated May 4, 1964, was paid by the Operator in connection with his regular settlement applicable to March 1964 production.

IV. CONCLUSION

A summary of production, sales, and royalty payable and paid during the period covered by this audit and during the total period of July 19, 1957, through June 2, 1965, follows:

	This Period	To June 2, 1965
Ore Mined:		
Below 500 level, tons	21,499	80,549
Other, tons	2,329	69,874
Concentrates Sold:		
Short wet tons	1,316.32	8,674.97
Short dry tons	1,200.99	8,158.49
Gross Smelter Value	$302,057.60	$1,504,100.53
Less: Hauling	21,061.09	139,911.96
Sampling, etc.	348.45	2,033.12
Smelter returns	$280,648.06	$1,362,155.45
Stabilization payments	-0-	65,189.96
Total net proceeds	$280,648.06	$1,427,345.41
Portion subject to Govt. Royalty	$254,714.90	$ 802,689.98
Royalty payable	$ 12,735.75	$ 40,134.51
Royalty paid	12,735.75	40,134.51
Balance of royalty due	$ -0-	$ -0-

The above summary includes actual proceeds on production through February 1965, the last month for which smelter settlements had been received as of the date of this audit.

The audit has confirmed the accuracy and propriety of the royalty payments received by the Government applicable to proceeds from concentrates sold during the period under review. It has also determined that proceeds during such period have been properly accounted.

C. E. Fisher

C. E. Fisher, OME Auditor

June 10, 1965

JUN 2 2 1965

Memorandum

To: Acting Field Officer, Region I

/s/ C. E. Fisher

From: Contract Administration and Audit Division

Subject: DMEA-4659 (Lead-Zinc)
Clayton Silver Mines
Clayton Mine
Custer County, Idaho
Contract Idm-E1108

The original and two copies of a Royalty Audit Certificate and Royalty Audit Report covering the subject contract are enclosed. If you concur in the facts stated therein, please make the following distribution:

(a) Original to the Fiscal Section, Office of Management Operations, Office of the Secretary, U. S. Department of the Interior, Washington, D. C. 20240;

(b) One copy for the Operator; and

(c) One copy for your files.

As evidence of your concurrence, a copy of your letter transmitting the Operator's copy of the report should be furnished to this Division. If for any reason you do not concur, the original and both copies of the report should be returned to this Division with your comments.

Enclosures

CEFisher:fh/6/16/65

cc:
Docket
Director's reading file
CA&A Div.
Fiscal Section

CA&A

So. 157 Howard Street
Spokane, Washington 99204
June 28, 1965

~~OFFICIAL~~
COPY
O. M. E.
RECEIVED
JUN 30 1965

INITIALS	CODE
	800

Memorandum

To: Fiscal Section, Office of Management Operations
Office of the Secretary, Department of the Interior
Washington, D. C.

From: Acting Field Officer, Region I

Subject: IMSA-4699 (Lead-Zinc)
Clayton Silver Mines
Clayton Mine
Custer County, Idaho
Contract I6s-21108

There is enclosed the original of a Royalty Audit Certificate and a Royalty Audit Report, dated June 10, 1965, covering the subject contract for the period April 19, 1964, through February 28, 1965.

One copy of the certificate and report has been sent to the Operator and one copy retained in the Spokane office files.

D. H. Maclaren

Enclosure

MLSmelser/mls

cc: OMB
CA&A
CPF

Director's Reading File
Resources Research Branch Chief

CA+A

So. 157 Howard Street
Spokane, Washington 99204
June 28, 1965

Mr. Norman M. Smith
General Manager
Clayton Silver Mines
Sunshine Star Route
Kellogg, Idaho

Re: DMEA-4659 (Lead-Zinc)
Clayton Mine
Custer County, Idaho
Contract IDm-E1108

Dear Mr. Smith:

There is enclosed for your information and files a copy of a Royalty Audit Certificate and a Royalty Audit Report, dated June 10, 1965, covering the subject contract for the period April 19, 1964, through February 28, 1965.

Sincerely yours,

D. R. MacLaren
Acting Field Officer, OME
Region I

Enclosure

MLMaclaer/mls

cc: OME
CA&A
CPF

Director's Reading File
Resources Research Branch Chief

E-1108

For royalty payment of $1,150.29, dated May 26, 1965, see transmittal letter file.

E-1108

For royalty payment of $1,204.47, dated March 26, 1965, see transmittal letter file.

E-1108

For royalty payment of $1,140.65, dated March 22, 1965, see transmittal letter file.

E-1108

For royalty payment of $1,033.31, dated February 1, 1965, see transmittal letter file.

E-1108

For royalty payment of $1,015.60, dated January 25, 1965, see transmittal letter file.

E-1108

For royalty payment of $1,047.44, dated December 9, 1964, see transmittal letter file.

E-1108

For royalty payment of $1,334.95, dated November 24, 1964, see transmittal letter file.

E-1108

For royalty payments of $1,067.98 and $1,271.42, dated September 22, 1964, see transmittal letter file.

E-1108

For royalty payment of $1,208.54, dated July 24, 1964, see transmittal letter file.

E-1108

For royalty payment of $694.46, dated June 25, 1964, see transmittal letter file.

E-1108

For royalty payment of $569.16, dated June 3, 1964, see transmittal letter file.

OFFICE OF MINERALS EXPLORATION
CONTRACT ADMINISTRATION AND AUDIT DIVISION

ROYALTY AUDIT CERTIFICATE

I have examined the production records and sales documents pertaining to the sale of lead concentrates for the period March 27, 1963, through April 18, 1964, of

Clayton Silver Mines
Sunshine Star Route
Kellogg, Idaho

produced from the Clayton Mine located in Custer County, Idaho, on which royalty is payable to the U. S. Government under terms of Contract Idm-E1108, Docket DMEA-4659 (lead-zinc), dated July 19, 1957, as amended.

My examination was made in accordance with generally accepted standards applicable in the circumstances.

The audit established the total proceeds from concentrates subject to Government royalty during the period March 27, 1963, through April 18, 1964, to be $170,580.88. Royalty due to the Government at the rates specified in the contract is $8,529.05.

A prior audit report dated May 2, 1963, found the sales subject to Government royalty during the period July 19, 1957, through March 26, 1963, to be $377,394.20 which added to the proceeds for the subsequent period make a total of $547,975.08 as of April 18, 1964. The royalty account of this project as of March 26, 1963, was:

Total Royalty Payable	$18,869.71
Total Royalty Paid	18,179.65
Balance of Royalty Due	$ 690.06

As of April 18, 1964, the royalty account of this project was found to be:

Total Royalty Payable	$27,398.76
Total Royalty Paid	27,396.24
Balance of Royalty Due	$ 2.52

C. E. Fisher

C. E. Fisher, OME Auditor

May 4, 1964

OFFICE OF MINERALS EXPLORATION
CONTRACT ADMINISTRATION AND AUDIT DIVISION

ROYALTY AUDIT REPORT

I. INTRODUCTION

On April 18, 1964, an audit was made of the production, sales, and royalty accounts and records of

Clayton Silver Mines
Sunshine Star Route
Kellogg, Idaho

pertaining to the sale of lead concentrates during the period March 27, 1963, through April 18, 1964, produced from property referred to as Clayton Mine located in Custer County, Idaho, on which royalty is payable to the U. S. Government under the terms of Contract Idm-E1108, Docket DMEA-4659 (lead-zinc), dated July 19, 1957, as amended.

The general books of the Operator are maintained by Arthur Riecke, certified public accountant, of the firm of H. F. Magnusson & Co., Scott Building, Wallace, Idaho. The production and sales records are kept by Norman M. Smith, the Operator's general manager, in his office on Sunshine Star Route, Kellogg, Idaho. Mr. Smith made all of his records freely available for the purpose of this audit. Such records were deemed to be adequate and it was not considered necessary to consult the general books nor to visit the mine office during this audit.

II. GENERAL INFORMATION

In accordance with Article 6, Annex I, and Amendment No. 2 of the contract, royalty is payable by the Operator, as principal if the producer or as surety if not the producer, on all minerals produced from the land described in Article 2 of the contract and on any minerals transported through any workings driven under the contract, for a period of 11 years from the date of the contract or until the total net amount contributed by the Government without interest is fully repaid, whichever occurs first. A Report of Review in lieu of final cost audit dated September 15, 1960, indicated accepted costs under the exploration contract amounting to $129,260.40 with the Government's contribution, on a 50 percent basis, being $64,630.20.

The land referred to in Article 2 of this contract consists of 5 patented mining claims in T. 11 N., R. 17 E., B.M., namely, Camp Bird, Camp Bird No. 2, Camp Bird No. 4, Discovery No. 1, and Discovery No. 3, excluding ore bodies above the sill of the 500 level known to exist on the date of the contract.

This Operator is exploring for silver under Contract 14-23-090-2177, Docket OME-6324, dated December 2, 1963. The land subject to this OME contract consists of 6 patented lode mining claims, namely, Camp Bird Nos. 2, 3, and 4, Galena Nos. 5 and 6, and Discovery No. 3, excluding known ore shoots lying above the 800 level of the Clayton Mine. Mr. Smith advised that there has not been any production to date which would be subject to royalty under this OME contract.

This Operator qualified for and received stabilization payments under Public Law 87-347 applicable to production sold during the period January 1962 through July 1963 in the amount of $65,189.96, but was found to be ineligible for stabilization payments on production sold subsequent to July 1963. The stabilization payments were apportioned between production subject to royalty and that not subject to royalty on the same basis as the original smelter returns were allocated.

III. SCOPE OF AUDIT AND FINDINGS

A considerable amount of preaudit work was accomplished in the OME office, Washington, D. C., prior to the field audit. During this preaudit work a tabulation of royalty paid by the Operator was prepared from copies of monthly statements, including statement of stabilization payments, furnished by the Operator in support of royalty payments. All of the data included in the statement was confirmed and verified with records of deposits. It was also verified with the Operator's underlying records during the on-site audit. The tabulation is filed as a part of my audit work papers.

This audit disclosed that the manner of record keeping and computing royalty described in my audit report dated June 6, 1961, was continued during the period under review.

The audit disclosed the underpayment of royalty in the amount of $2.52 applicable to mine lot No. 904 sold to the East Helena Plant of American Smelting & Refining Co. covering production in September and October 1963 as follows:

	Reported			Should be			Diff.
Mo.	Proceeds	DMEA %	DMEA Amt.	Proceeds	DMEA %	DMEA Amt.	DMEA
9/63	$ 7,980.33	59.220	$4,725.95	$ 8,046.97	59.220	$4,765.42	$39.47
10/63	2,918.49	45.224	1,319.86	2,942.85	45.224	1,330.87	11.01
Total	$10,898.82		$6,045.81	$10,989.82		$6,096.29	$50.48
				Additional royalty due at 5%			$ 2.52

IV. CONCLUSION

A summary of production, sales, and royalty payable and paid during the period covered by this audit and during the total period of July 19, 1957, through April 18, 1964, follows:

	This Period	To April 18, 1964
Ore Mined:		
Below 500 level, tons	12,744	59,050
Other, tons	10,113	67,545
Concentrates Sold:		
Short wet tons	1,625.23	7,358.65
Short dry tons	1,419.92	6,757.50
Gross Smelter Value	$315,511.90	$1,136,852.97
Less: Hauling	26,003.68	118,850.87
Sampling, etc.	466.16	1,684.67
Smelter returns	$289,042.06	$1,016,317.43
Stabilization payments	18,181.56	65,189.96
Total net proceeds	$307,223.62	$1,081,507.39
Portion subject to Gov. royalty	$170,580.88	$ 547,975.08
Royalty payable	$ 8,529.05	$ 27,398.76
Royalty paid	8,526.53	27,396.24
Balance of royalty due	$ 2.52	$ 2.52

The above summary includes actual proceeds, including stabilization payments, on production through February 1964, the last month for which smelter settlements had been received as of the date of this audit.

The audit has confirmed the accuracy and propriety of the royalty payments received by the Government applicable to proceeds from concentrates sold during the period under review. It has also determined that proceeds during such period have been properly accounted for except as indicated above.

C. E. Fisher

C. E. Fisher, OME Auditor

May 4, 1964

CA & A

EXTRA COPY
O. M. E.
RECEIVED MAY 20 1964

DATE		CODE
		800

So. 157 Howard Street
Spokane, Washington 99204
May 18, 1964

Mr. Norman M. Smith
General Manager
Clayton Silver Mines
Sunshine Star Route
Kellogg, Idaho

Re: IMBA-4659 (Lead-Zinc)
Clayton Silver Mines
Clayton Mine
Custer County, Idaho
Contract I6m-X1108

Dear Mr. Smith:

There are enclosed one copy each of a Royalty Audit Certificate and a Royalty Audit Report, dated May 4, 1964, covering the period March 7, 1963, through April 18, 1964.

Payment in the amount of $2.52 indicated by the audit as royalty due is requested.

Sincerely yours,

D. S. Maclaren
Acting Field Officer, OMR
Region I

Enclosures

MLSmelser:mls

cc: OMR(2)
CAAA
CPF

Director's Reading File
Resources Research Branch Chief

EXTRA COPY
O. M. E.
RECEIVED MAY 20 1964
DATE | INITIALS | CODE
800

So. 157 Howard Street
Spokane, Washington 99204
May 18, 1964

Memorandum

To: Fiscal Section, Office of Management Operations
Office of the Secretary, Department of the Interior
Washington, D. C

From: Acting Field Officer, Region I

Subject: IMBA-4659 (Lead-Zinc)
Clayton Silver Mines
Clayton Mine
Custer County, Idaho
Contract Ida-21108

Enclosed are the originals of a Royalty Audit Certificate and a Royalty Audit Report, dated May 4, 1964, covering the subject contract for the period March 27, 1963, through April 18, 1964.

One copy each of the certificate and audit report are being mailed to the Operator, and one copy of each will be retained in the Spokane office files.

D. H. Maclaren

Enclosures

RLSmeleer:mls

cc: OME(2)
CAAA
CPF

Director's Reading File
Resources Research Branch Chief

MAY 1 8 1964

Memorandum

To: Acting Field Officer, Region I

(Signed) E. D. Talbert

From: Chief, Contract Administration and Audit Division

Subject: DMEA-4659 (Lead-Zinc)
Clayton Silver Mines
Clayton Mine
Custer County, Idaho
Contract Idm-E1108

The original and two copies of a Royalty Audit Certificate and Royalty Audit Report covering the subject contract are enclosed. If you concur in the facts stated therein, please make the following distribution:

(a) Original to the Fiscal Section, Office of Management Operations, Office of the Secretary, U. S. Department of the Interior, Washington, D. C. 20240;
(b) One copy for the Operator; and
(c) One copy for your files.

As evidence of your concurrence, a copy of your letter transmitting the Operator's copy of the report should be furnished to this Division. If for any reason you do not concur, the original and both copies of the report should be returned to this Division with your comments.

Enclosures

CEFisher/ama 5-11-64

cc:
Docket
Director's Reading File
CA & A Division
Fiscal Section

E-1108

For royalty payment of $544.02, dated April 16, 1964, see transmittal letter file.

E-1108

For royalty payment of $665.33, dated April 16, 1964, see transmittal letter file.

So. 157 Howard Street
Spokane, Washington 99204
March 11, 1964

O. M. E
RECEIVED MAR 13
DATE
800

Mr. Norman M. Smith, General Manager
Clayton Silver Mines
Sunshine Star Route
Kellogg, Idaho

Re: DMEA-4639 (Lead-Zinc)
Clayton Mine
Custer County, Idaho
Contract Idm-E1108

Dear Mr. Smith:

We have just been advised that Mr. Clarence E. Fisher plans to visit Spokane and will make royalty audits in the Coeur d'Alene area on or about April 16 and 17.

Sincerely yours,

D. R. MacLaren
Acting Field Officer, OME
Region I

MLSmelser:mls

cc: CA&A Div.
OME
CPF

Director's Reading File
Resources Research Branch Chief

N.B. Mr. Talbert: Mr. Buhrmester, Accountant, The Bunker Hill Co., was advised of Mr. Fisher's pending visit on March 10 when I visited that company's office.

E-1108

For royalty payment of $771.05, dated February 27, 1964, see transmittal letter file.

Idm-E1108 Clayton Silver Mines DMEA-4659

Excerpt from February 1964 Metal Mining & Processing Magazine

Clayton Silver Mines is now producing about 85 tpd. of lead-zinc-silver ore near Clayton in Custer County, Production is mainly from stopes between the 500 and 700-ft. levels. Diamond drill exploration below the bottom 800 level is planned to the 1,550-ft. level.

E-1108

For royalty payment of $993.29, dated February 3, 1964, see transmittal letter file.

E-1108

For royalty payment of $1,697.30, dated January 7, 1964, see transmittal letter file.

E-1108

For royalty payment of $287.25, dated December 4, 1963, see transmittal letter file.

So. 157 Howard Street
Spokane, Washington 99204
October 24, 1963

EXTRA COPY
O. M. E
RECEIVED
TE

800

Memorandum

To: Chief, Division of Field Operations

From: Acting Field Officer, Region I

Subject: Royalty inspection
DMEA-4659 (Lead-Zinc)
Clayton Silver Mines
Clayton Silver Mine
Custer County, Idaho
Contract Idm-K1108

A visit to the Clayton mine was made October 15, 1963. No new ore is being broken in the mine at present. Mill feed is coming from broken ore in raises and stopes above the 800 level.

The mine is just about out of ore and R. J. Legard, General Superintendent, is urging the company to do the drilling which is the subject of a pending OME application on their own, if necessary. He holds that there is just about enough ore to pay for the operation including pumping, but if the mine is shut down and allowed to flood, pumping alone will make any future exploration below the 800 level almost prohibitive in cost. As it is, if additional ore is found, which is an excellent possibility, the shaft willhave to be repaired and much of the mill replaced.

He showed me a watch glass full of wire silver that came from the vein just above the 800 level and some rock specimens containing tetrahedrite, indicating that good silver values may be expected below the level.

D. R. MacLaren

Distribution:
OME(Orig.&2)
Docket

E-1108

For royalty payment of $754.82, dated October 2, 1963, see transmittal letter file.

E-1108

For royalty payment of $1,058.69, dated September 18, 1963, see transmittal letter file.

E-1108

For royalty payment of $834.17, dated July 22, 1963, see transmittal letter file.

E-1108

For royalty payment of $913.17, dated July 1, 1963, see transmittal letter file.

E-1108

For royalty payment of $377.33, dated May 21, 1963, see transmittal letter file.

Extra
OFFICIAL FILE COPY
O. M. E
RECEIVED MAY 10 1963

DATE	INITIALS	CODE
		800

So. 137 Howard Street
Spokane 4, Washington
May 8, 1963

Mr. Norman M. Smith, General Manager
Clayton Silver Mines
Sunshine Star Route
Kellogg, Idaho

Re: DMEA-4659 (Lead-Zinc)
Clayton Silver Mines
Clayton Mine
Custer County, Idaho
Contract Idm-X1108

Dear Mr. Smith:

There are enclosed one copy each of a Royalty Audit Certificate and a Royalty Audit Report, dated May 2, 1963, covering the subject contract for the period March 1, 1962, through March 26, 1963.

Sincerely yours,

D. R. MacLaren
Acting Field Officer, OME
Region I

Enclosures

DRMacLaren:my

cc: OME(2)
CAAA
CFF
Sending copies to:
Nelson
McKelvey

So. 157 Howard Street
Spokane 4, Washington
May 8, 1963

Memorandum

To: Fiscal Section, Division of Administrative Services, Office of the Secretary, Washington 25, D. C.

From: Acting Field Officer, Region I

Subject: DMMA-4639 (Lead-Zinc)
Clayton Silver Mines
Clayton Mine
Custer County, Idaho
Contract I6m-E1168

Enclosed are the originals of a Royalty Audit Certificate and a Royalty Audit Report, dated May 2, 1963, covering the subject contract for the period March 1, 1962, through March 26, 1963.

One copy each of the certificate and audit report are being mailed to the Operator, and one copy of each will be retained in the Spokane office files.

D. N. MacLaren

Enclosures

cc: CMR(2)
CAAA
CPF
Reading copies to:
Nelson
McKelvey

DNMacLaren:my

"CE OF MINERALS EXPLORATION
MENT OF THE INTERIOR
NGTON 25, D. C.

X

X

14X0108, Salaries and Expenses,
Office of Minerals Exploration,
Interior

TO: D. K. MAC LAREN, ACTING FIELD OFFICER
OFFICE OF MINERALS EXPLORATION, REGION I
SOUTH 157 HOWARD STREET
SPOKANE 4, WASHINGTON

REURTEL CLAYTON SILVER MINES, DMEA-4659, FORWARD ROYALTY AUDIT WITHOUT REQUESTING PAYMENT.

George C. Selfridge

G. C. SELFRIDGE, CHIEF
DIVISION OF FIELD OPERATIONS

GCSelfridge/gla (5-8-63)
cc to: Director's Reading File
CA&A Division
Docket
Mr. Selfridge

1 1

G. C. Selfridge, Chief, Division of Field Operations RR 7-1820X5372 May 8, 1963 3:45 p.m.

George Fumich, Jr.

E-1108

For royalty payment of $7.44, dated April 30, 1963, see transmittal letter file.

E-1108

For royalty payment of $312.73, dated April 26, 1963, see transmittal letter file.

OFFICE OF MINERALS EXPLORATION
CONTRACT ADMINISTRATION AND AUDIT DIVISION

ROYALTY AUDIT CERTIFICATE

I have examined the production records and sales documents pertaining to the sale of lead concentrates for the period March 1, 1962, through March 26, 1963, of

Clayton Silver Mines
Sunshine Star Route
Kellogg, Idaho

produced from the Clayton Mine located in Custer County, Idaho, on which royalty is payable to the U. S. Government under terms of Contract Idm-E1108, Docket BMEA-4659 (lead-zinc), dated July 19, 1957, as amended.

My examination was made in accordance with generally accepted standards applicable in the circumstances.

The audit established the total proceeds from concentrates subject to Government royalty during the period March 1, 1962, through March 26, 1963, to be $179,117.96. Royalty due to the Government at the rates specified in the contract is $8,955.87.

A prior audit report dated May 29, 1962, found the sales subject to Government royalty during the period July 19, 1957, through February 28, 1962, to be $198,276.24 which added to the proceeds for the subsequent period make a total of $377,394.20 as of March 26, 1963. The royalty account of this project as of February 28, 1962, was:

Total Royalty Payable	$ 9,913.84
Total Royalty Paid	9,913.84
Balance of Royalty Due	$ -0-

As of March 26, 1963, the royalty account of this project was found to be:

Total Royalty Payable	$18,869.71
Total Royalty Paid	18,179.65
Balance of Royalty Due	$ 690.06

C. E. Fisher

C. E. Fisher, OME Auditor

MAY 2 1963

OFFICE OF MINERALS EXPLORATION
CONTRACT ADMINISTRATION AND AUDIT DIVISION

ROYALTY AUDIT REPORT

I. INTRODUCTION

On April 18, 1963, an audit was made of the production, sales, and royalty accounts and records of

Clayton Silver Mines
Sunshine Star Route
Kellogg, Idaho

pertaining to the sale of lead concentrates during the period March 1, 1962, through March 26, 1963, produced from property referred to as Clayton Mine located in Custer County, Idaho, on which royalty is payable to the U. S. Government under the terms of Contract Idm-E1108, Docket DMEA-4639 (lead-zinc), dated July 19, 1957, as amended.

The general books of the Operator are maintained by Arthur Riecke, certified public accountant, of the firm of M. F. Magnusson & Co., Scott Building, Wallace, Idaho. The production and sales records are kept by Norman M. Smith, the Operator's general manager, in his office on Sunshine Star Route, Kellogg, Idaho. Mr. Smith made all of his records freely available for the purpose of this audit. Such records were deemed to be adequate and it was not considered necessary to consult the general books nor to visit the mine office during this audit.

II. GENERAL INFORMATION

In accordance with Article 6, Annex I, and Amendment No. 2 of the contract, royalty is payable by the Operator, as principal if the producer or as surety if not the producer, on all minerals produced from the land described in Article 2 of the contract, except portions of ore bodies above the 500 level known to exist on the date of the contract, and on any minerals transported through any workings driven under the contract, for a period of 11 years from the date of the contract or until the total net amount contributed by the Government without interest is fully repaid, whichever occurs first. A Report of Review in lieu of final cost audit dated September 15, 1960, indicated accepted costs under the exploration contract amounting to $129,260.40 with the Government's contribution, on a 50 percent basis, being $64,630.20.

This Operator has qualified for stabilization payments under Public Law 87-347 and such payments have been received from the General

Services Administration applicable to production sold during the period January 1962 through January 1963. Claim has been filed with GSA for the amount of stabilization computed by the Operator as due for production during February 1963. Settlement had not been received at the time of this audit. These stabilization payments have been apportioned between production subject to royalty and that not subject to royalty on the same basis as the original smelter returns have been allocated.

III. SCOPE OF AUDIT AND FINDINGS

A considerable amount of preaudit work was accomplished in the OMM office, Washington, D. C., prior to the field audit. During this preaudit work a tabulation of royalty paid by the Operator was prepared from copies of monthly statements, including statement of stabilization payments, furnished by the Operator in support of royalty payments. All of the data included in the statement was confirmed and verified with records of deposits. It was also verified with the Operator's underlying records during the on-site audit. The tabulation is filed as a part of my audit work papers.

This audit disclosed that the manner of record keeping and computing royalty described in my audit report dated June 6, 1961, was continued during the period under review.

IV. CONCLUSION

A summary of production, sales, and royalty payable and paid during the period covered by this audit and during the total period of July 19, 1957, through February 28, 1963, follows:

	This Period	Total Period
Ore Mined:		
Below 500 level, tons	16,723	46,306
Other, tons	3,989	57,452
Concentrates Sold:		
Short wet tons	1,159.90	5,733.42
Short dry tons	1,064.34	5,337.58
Gross Smelter Value	$191,277.97	$868,349.47
Less: Hauling	18,558.43	92,847.19
Sampling, etc.	258.09	1,218.51
Smelter returns	$172,461.45	$774,283.77
Stabilization payments	48,211.36	48,211.36
Total net proceeds	$220,672.81	$822,495.13

	This Period	Total Period
Portion subject to Government royalty	$179,117.96	$377,394.80
Royalty payable at 5%	$ 8,955.87	$ 18,869.71
Royalty paid	8,265.81	18,179.65
Balance of Royalty Due	$ 690.06	$ 690.06

The above summary includes actual proceeds including stabilization payments on production through January 1963. It also includes estimated proceeds of $7,346.62, including an estimated $911.40 stabilization payment, and estimated royalty of $377.33 on February 1963 production. Subsequent to this audit, but prior to the release of this report, a royalty payment of $312.73 was received for application against the balance of royalty due.

The audit has confirmed the accuracy and propriety of the royalty payments received by the Government applicable to proceeds from concentrates sold during the period under review. It has also determined that proceeds during such period have been properly accounted for.

C. E. Fisher

C. E. Fisher, GMK Auditor

MAY 2 1963

MAY 2 1963

Memorandum

To: Acting Field Officer, Region I

From: E. D. Talbert, Chief (Signed) E. D. Talbert
Contract Administration and Audit Division

Subject: DMRA-4659 (Lead-Zinc)
Clayton Silver Mines
Clayton Mine
Custer County, Idaho
Contract Idm-E1108

The original and two copies of a Royalty Audit Certificate and Royalty Audit Report covering the subject contract are enclosed. If you concur in the facts stated therein, please make the following distribution:

(a) Original to the Fiscal Section, Division of Administrative Services, Office of the Secretary, Department of the Interior, Washington 25, D. C.;
(b) One copy for the Operator; and
(c) One copy for your files.

As evidence of your concurrence, a copy of your letter transmitting the Operator's copy should be furnished this Division. If for any reason you do not concur, the original and both copies of the report should be returned to this Division with your comments.

Enclosures

CEFisher/ama 5-2-63

cc:
Docket
Director's Reading File
CA & A Division
Fiscal Section

E-1108

For royalty payment of $404.46, dated March 26, 1963, see transmittal letter file.

EXTRA COPY
O. M. E.
RECEIVED MAR 25 1963
DATE
800

E-1108

For royalty payment of $501.16, dated March 20, 1963, see transmittal letter file.

So. 157 Howard Street
Spokane 4, Washington
March 11, 1963

RECEIVED
O. M. E.
MAR 1 1963
800

Mr. Norman M. Smith, General Manager
Clayton Silver Mines
Sunshine Star Route
Kellogg, Idaho

Re: DMEA-4659 (Lead-Zinc)
Clayton Silver Mines
Clayton Mine
Custer County, Idaho
Contract Idm-X1108

Dear Mr. Smith:

According to an article in the March 7, 1963, issue of the "Wallace Miner," Clayton Silver Mines has received the sum of $41,465 under the Lead-Zinc Subsidy plan.

That portion of the payment that is the result of the shipment of ore subject to DMEA royalty is also subject to royalty as provided for in Article 6(b) and (c) of the contract.

We have just been advised that Mr. Clarence E. Fisher plans to visit Spokane and will make royalty audits in the Coeur d'Alene area on or about April 17 through 19.

Sincerely yours,

D. R. MacLaren
Acting Field Officer, OMS
Region I

DRMacLaren:my

cc: OMS(2)
CFF
Reading copies to:
Nolan
McKalvey

E-1108

For royalty payment of $1,028.44, dated January 16, 1963, see transmittal letter file.

E-1108

For royalty payments of $781.05 and $1,457.05, dated January 3, 1963, see transmittal letter file.

For royalty payment of $1,044.71, dated December 4, 1962, see transmittal letter file.

E-1108

For royalty payment of $1,563.29 dated October 3, 1962, see transmittal letter file.

E-1108

For royalty payment of $308.78, dated September 26, 1962, see transmittal letter file.

E-1108

For royalty payment of $679.36, dated July 30, 1962, see transmittal letter file.

E-1108

For royalty payment of $497.51, dated June 8, 1962, see transmittal letter file.

OFFICE OF MINERALS EXPLORATION
CONTRACT ADMINISTRATION AND AUDIT DIVISION

ROYALTY AUDIT CERTIFICATE

I have examined the production records and sales documents pertaining to the sale of lead concentrates for the period March 1, 1961, through February 28, 1962, by

Clayton Silver Mines
Sunshine Star Route
Kellogg, Idaho

produced from Clayton Mine located in Custer County, Idaho, on which royalty is payable to the U. S. Government under terms of Contract Idm-E1108, Docket OMEA-4659 (lead-zinc), dated July 19, 1957, as amended.

My examination was made in accordance with generally accepted standards applicable in the circumstances.

The audit established the total sales of concentrates subject to Government royalty during the period March 1, 1961, through February 28, 1962, to be $120,453.70. Royalty due to the Government at the rates specified in the contract is $6,022.69.

A prior audit report dated June 6, 1961, found the sales subject to Government royalty during the period July 19, 1957, through February 28, 1961, to be $77,823.14 which added to the sales for the subsequent period make a total of $198,276.84 as of February 28, 1962. The royalty account as of February 28, 1961, was:

Total Royalty Payable	$3,891.15
Total Royalty Paid	3,891.15
Balance of Royalty Due	$ -0-

As of February 28, 1962, the royalty account was found to be:

Total Royalty Payable	$9,913.84
Total Royalty Paid	9,913.84
Balance of Royalty Due	$ -0-

C. E. Fisher

C. E. Fisher, OME Auditor

May 29, 1962

OFFICE OF MINERALS EXPLORATION
CONTRACT ADMINISTRATION AND AUDIT DIVISION

ROYALTY AUDIT REPORT

I. INTRODUCTION

On May 4, 1962, an audit was made of the production, sales, and royalty accounts and records of

Clayton Silver Mines
Sunshine Star Route
Kellogg, Idaho

pertaining to the sale of lead concentrates during the period March 1, 1961, through February 28, 1962, produced from property referred to as the Clayton Mine located in Custer County, Idaho, on which royalty is payable to the U. S. Government under the terms of Contract Idm-31108, Docket DMEA-4659 (lead-zinc), dated July 19, 1957, as amended.

The general books of the company are maintained by Arthur Riecke, certified public accountant, of the firm of H. F. Magnusson & Co., Scott Building, Wallace, Idaho, where this audit was performed.

II. GENERAL INFORMATION

In accordance with Article 6, Annex I, and Amendment No. 2 of the contract, royalty is payable by the Operator, as principal if the producer or as surety if not the producer, on all minerals mined or produced from the land described in Article 2 of the contract, except portions of known ore bodies above the 500 level, and on any minerals transported through any workings driven under the contract, for a period of 11 years from the date of the contract or until the total net amount contributed by the Government without interest is fully repaid, whichever occurs first. A Report of Review in lieu of final cost audit dated September 15, 1960, indicated accepted costs under the exploration contract amounting to $129,260.40 with the Government's contribution, on a 50 percent basis, being $64,630.20.

This audit disclosed that the manner of record keeping and computing Government royalty described in my audit report dated June 6, 1961, was continued during the period under review.

III. SCOPE OF AUDIT AND FINDINGS

A considerable amount of preaudit work was accomplished in the OME office, Washington, D. C., prior to the field audit. During this preaudit work a tabulation of royalty paid by the Operator was prepared from copies of monthly statements furnished by the Operator

in support of royalty payments. All of the data included in the statement was confirmed and verified with records of deposits. It was also verified with the Operator's underlying records during the on-site audit. The tabulation is filed as a part of my audit work papers.

IV. CONCLUSION

A summary of production, sales, and royalty payable and paid during the period covered by this audit and during the period July 19, 1957, through February 28, 1962, follows:

	March 1, 1961 through February 28, 1962	July 19, 1957 through February 28, 1962
Ore Mined:		
Below 500 level, tons	19,629	29,583
Other, tons	10,505	53,463
Concentrates Sold:		
Short wet tons	1,462.28	4,573.52
Short dry tons	1,342.04	4,273.24
Gross Smelter Value	$220,027.21	$677,071.50
Less: Hauling	23,396.13	74,288.76
Sampling, etc.	297.82	960.42
Smelter returns	$196,333.26	$601,822.32
Portion subject to Cov't. royalty	$120,453.70	$198,276.84
Royalty payable at 5%	$ 6,022.69	$ 9,913.84
Royalty paid	6,022.69	9,913.84

The audit has confirmed the accuracy and propriety of the royalty payments received by the Government applicable to the sale of concentrates during the period under review. It also has determined that all sales during such period have been properly accounted for.

C. E. Fisher

C. E. Fisher, OME Auditor

May 29, 1962

So. 157 Howard Street
Spokane 4, Washington
June 8, 1962

EXTRA COPY
O. M. E
RECEIVED JUN 12 '62
DATE
800

Memorandum

To: Chief, Fiscal Section, Division of Administrative Services, Office of the Secretary, Washington 25, D. C.

From: Acting Field Officer, OME, Region I

Subject: DMEA-4659 (Lead-Zinc)
Clayton Silver Mines
Clayton Mine
Custer County, Idaho
Contract Idm-E1108

There are enclosed a Royalty Audit Certificate and Royalty Audit Report, dated May 29, 1962, covering the subject contract for the period March 1, 1961, through February 28, 1962.

One copy each of the Audit Certificate and Audit Report are being mailed to the operator today.

D. R. MacLaren

Enclosures

DRMacLaren:my
cc: CA&A Div., OME
OME, CFF, Spokane
Reading copies to:
Nolan
Hobbs
Guild

So. 157 Howard Street
Spokane 4, Washington
June 8, 1962

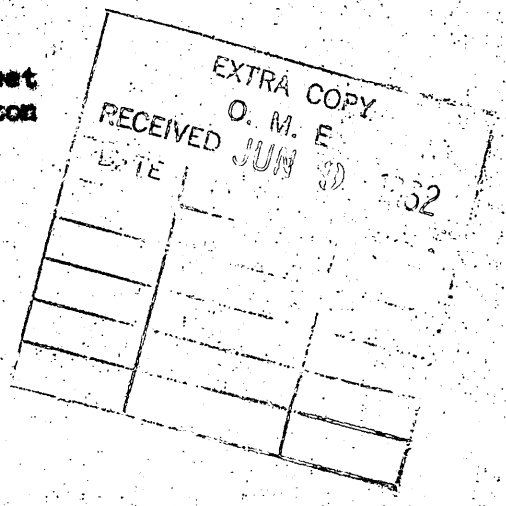

Mr. Norman M. Smith
General Manager
Clayton Silver Mines
Sunshine Star Route
Kellogg, Idaho

Re: DMEA-4659 (Lead-Zinc)
Clayton Silver Mines
Clayton Mine
Custer County, Idaho
Contract Idm-E1108

Dear Mr. Smith:

There are enclosed for your information one copy each of a Royalty Audit Certificate and Royalty Audit Report dated May 29, 1962, on the sale of lead concentrates from the Clayton mine for the period March 1, 1961, through February 28, 1962, on which royalty is payable to the U. S. Government under the terms of Contract Idm-E1108 dated July 19, 1957, as amended.

Sincerely yours,

D. R. MacLaren
Acting Field Officer, OME
Region I

Enclosures

DRMacLaren:my
cc: Fisc. Sec., Div. of Admin. Serv., OS
w/orig. Royalty Audit Report and Certificate

CA&A Div., OME
OME
Reading copies to:
Nolan
Hobbs
Guild

JUN 1 1962

Memorandum

To: Acting Field Officer, Region I

From: E. D. Talbert, Acting Chief (Signed) E. D. Talbert
Contract Administration and Audit Division

Subject: DMEA-4659 (Lead-Zinc)
Clayton Silver Mines
Clayton Mine
Custer County, Idaho
Contract Idm-51108

The original and two copies of a Royalty Audit Certificate and Royalty Audit Report covering the subject contract are enclosed. If you concur in the facts stated therein, please make the following distribution:

(a) Original to the Fiscal Section, Division of Administrative Services, Office of the Secretary, Department of the Interior, Washington 25, D. C.;
(b) One copy for the Operator; and
(c) One copy for your files.

As evidence of your concurrence, a copy of your letter transmitting the Operator's copy should be furnished this Division. If for any reason you do not concur, the original and both copies of the report should be returned to this Division with your comments.

Enclosures

CEFisher/ama 6-1-62

cc:
Docket
Director's Reading File
CA & A Division
Mr. Rothrock

E-1108

For royalty payment of $358.65, dated May 3, 1962, see transmittal letter file.

E-1108

For royalty payment of $415.37, dated April 24, 1962, see transmittal letter file.

Ultra

~~OFFICIAL FILE~~ COPY
O. M. E
RECEIVED APR 13 1962
DATE

800
~~500~~

So. 157 Howard Street
Spokane 4, Washington
April 11, 1962

Mr. Norman Smith
General Manager
Clayton Silver Mines
Sunshine Star Route
Kellogg, Idaho

Re: DMEA-1659 (Lead-Zinc)
Clayton Mine
Custer County, Idaho
Contract Idm-E1108

Dear Mr. Smith:

C. E. Fisher, OME auditor, plans to visit the Kellogg office of Clayton Silver Mines for the purpose of making a royalty audit on Thursday, May 3, or Friday, May 4, 1962. If either of these dates will not be convenient, please let me know.

Sincerely yours,

D. R. MacLaren
Acting Field Officer, OME
Region I

DRMacLaren:my
cc: CAAA Div.
OME
CFF
Reading copies to:
Nolan
Hebbs
Guild

E-1108

For royalty payment of $517.42, dated March 30, 1962, see transmittal letter file.

E-1108

For royalty payment of $1,401.47, dated January 24, 1962, see transmittal letter file.

E-1108

For royalty payment of $678.35, dated December 22, 1961, see transmittal letter file.

E-1108

For royalty payment of $526.01, dated November 29, 1961, see transmittal letter file.

E-1108

For royalty payment of $186.34, dated October 11, 1961, see transmittal letter file.

E-1108

For royalty payment of $402.39, dated September 19, 1961, see transmittal letter file.

E-1108

For royalty payment of $569.90, dated August 11, 1961, see transmittal letter file.

EXTRA COPY
O. M. E.
RECEIVED AUG 4 1961
DATE | INITIALS | CODE
800

So. 157 Howard Street
Spokane 4, Washington
August 2, 1961

Memorandum

To: Chief, Division of Field Operations

From: Acting Field Officer, Region I

Subject: Royalty inspections

Docket No. DMEA-4699 (Lead-Zinc), Clayton Silver Mines, Clayton Silver Mine, Custer County, Idaho, Contract No. Idm-E1108:

The Clayton mine was visited July 22, 1961. Richard Settle, Superintendent, was interviewed. The mill was undergoing routine repairs. The purpose of this visit was primarily to inquire about possible activity at other Certified Projects in the area that time did not permit visiting. Mr. Settle was able to give me some information on the following mines:

Docket No. DMEA-1894 (Lead), Buchman, Brecken and Norden, Red Bird Mine, Custer County, Idaho, Amended Contract No. 266 (There have been no shipments from the Red Bird mine which Settle believes has been leased by Bunker-Hill.)

Docket No. DMEA-1999K (Zinc-Lead), Gardner and Vance, Hoodoo Mine, Custer County, Idaho, Contract No. Idm-E223 (There has been no production from the Hoodoo mine but Settle believes that it too has been taken over by Bunker Hill.)

Docket No. DMEA-3015 (Lead-Zinc), Hecla Mining Company, Livingston Mine, Custer County, Idaho, Amended Contract No. Idm-E373 (Elmer H. Swanson, present owner of the Livingston mine by virtue of a Receiver's Sale is doing some bulldozer trenching in an effort to find some shallow ore that can be mined by open cut or shallow workings. To date, no shipments have been made.

Docket No. DMEA-2213 (Zinc), Elmer Ruderlin, Meadow View Claims, Custer County, Idaho, Contract No. Idm-E294 (Settle has not heard of any shipments being made but believes that Bunker-Hill has leased the property. He has no information on what activity there may be.

Docket No. DMEA-3664 (Lead-Zinc), Highland-Surprise Consolidated Mining Company, Deer Trail Mine, Custer County, Idaho, Contract No. Idm-E819 (Settle has no positive information on activity at the Deer Trail mine but believes something is being done there.

I shall write to the various Operators or owners of the above properties for more definite information.

D. R. MacLaren

E-1108

For royalty payment of $472.20, dated June 14, 1961, see transmittal letter file.

E-1108

For royalty payment of $494.59, dated May 16, 1961, see transmittal letter file.

OFFICE OF MINERALS EXPLORATION
CONTRACT ADMINISTRATION AND AUDIT DIVISION

ROYALTY AUDIT CERTIFICATE

I have examined the production records and sales documents pertaining to the sale of lead concentrates for the period January 1, 1961, through February 28, 1961, by

Clayton Silver Mines
Sunshine Star Route
Kellogg, Idaho

produced from the Clayton Mine, located in Custer County, Idaho, on which royalty is payable to the U. S. Government under terms of Contract Idm-E1108, Docket No. DMEA-4659 (lead-zinc), dated July 19, 1957, as amended.

My examination was made in accordance with generally accepted standards applicable in the circumstances.

The audit established the total sales of concentrates subject to DMEA royalty during the period January 1, 1961, through February 28, 1961, to be $11,465.54. Royalty due to the Government at the rates specified in the contract is $573.18.

A Report of Royalty Review for the period July 19, 1957, through December 31, 1960, found the sales subject to Government royalty as of the last date to be $66,359.60, which added to the sales for the subsequent period make a total of $77,825.14 as of February 28, 1961. The royalty account as of December 31, 1960, was:

Total Royalty Due	$3,317.97
Total Royalty Paid	3,317.97
Balance of Royalty Due	$ -0-

As of February 28, 1961, the royalty account was found to be:

Total Royalty Due	$3,891.15
Total Royalty Paid	3,891.15
Balance of Royalty Due	$ -0-

C. E. Fisher

C. E. Fisher, OME Auditor

June 6, 1961

OFFICE OF MINERALS EXPLORATION
CONTRACT ADMINISTRATION AND AUDIT DIVISION

ROYALTY AUDIT REPORT

I. INTRODUCTION

On May 5, 1961, an audit was made of the production, sales, and royalty accounts and records of

Clayton Silver Mines
Sunshine Star Route
Kellogg, Idaho

pertaining to the sale of lead concentrates during the period January 1, 1961, through February 28, 1961, produced from property referred to as the Clayton Mine located in Custer County, Idaho, on which royalty is payable to the U. S. Government under the terms of Contract Idm-61108, Docket No. DMEA-4659 (lead-zinc), dated July 19, 1957, as amended.

The Operator's production and sales records were made available for audit by Norman M. Smith, general manager, in his office at the above address. The general books of the company are maintained by Arthur Riecke, certified public accountant, of the firm of H. F. Magnusson & Co., Scott Bldg., Wallace, Idaho. Mr. Riecke also made his records available for inspection.

II. GENERAL INFORMATION

In accordance with Article 6, Annex I, and Amendment No. 2 of the contract, royalty is payable on all minerals mined or produced from the land described in Article 2 of the contract, except portions of known ore bodies above the 500 level, and on any minerals transported through any workings driven under the contract, for a period of 11 years from the date of the contract or until the total net amount contributed by the Government without interest is fully repaid, whichever occurs first. A Report of Review in lieu of final audit dated September 15, 1960, indicated accepted costs under the exploration contract amounting to $129,260.40 with the Government's contribution, on a 50 percent basis, being $64,630.20.

Production from the area subject to Government royalty (below the 500 level) began during July 1959 and is continuing at the time of this audit. Such ore is commingled prior to sampling with ore from above the 500 level, which is not subject to such royalty. After concentration, shipments are made to the East Helena Plant of the American Smelting and Refining Co.

The Operator pays royalty monthly, after receipt of the applicable settlement sheets, on that portion of the gross proceeds that is

the direct proportion of the tons removed each month from below the 500 level to the total tons mined during that month. This procedure, which was proposed by the Operator in a letter dated February 16, 1959, was accepted by the DMEA Field Team, Region I, in a letter dated February 24, 1959.

The audit disclosed that Mr. Smith prepares the monthly statements of production based on reports made to him by the mine superintendent. These reports are sent to Mr. Riecke for the issuance of the checks to the Government and the recording of the disbursements.

Mr. Smith stated that the company does not have facilities for weighing ore. Instead, a skip count is maintained by the hoistman who makes daily reports of the number of skips hoisted from the different areas of the mine. The tonnage of ore is estimated as one and one-half tons for each skip load.

It is this auditor's opinion that the records maintained by Mr. Smith are accurately kept, are reliable, that the Government is getting its fair royalty return, and that the time and expense involved in a trip to the mine for the inspection of the records at that place is not warranted.

III. SCOPE OF AUDIT AND FINDINGS

A. Conference with Acting Field Officer

A conference with D. R. MacLaren, Acting Field Officer, Region I, Spokane, Washington, disclosed the following:

(a) The Operator does not stockpile ore subject to royalty repayment.
(b) Production subject to Government royalty is commingled with exempt production. Allocation of the proceeds from the commingled production is made according to procedure outlined above and is considered to be equitable.
(c) The Operator does not stockpile mine or mill rejects that are considered as having a potential value during the royalty repayment period. However, mill tailings are held in a tailing pond to avoid stream pollution. Such tailings have no foreseeable potential value.
(d) Assay controls in effect are deemed adequate.
(e) The manner of disposing of production gives the Government its fair royalty returns.

(f) Periodic examinations of operations indicate that the Operator is properly reporting his production subject to Government royalty.
(g) The Operator does not buy from or sell to other operators.
(h) The property is currently active.

B. Audit of Settlement Statements

A Report of Royalty Review dated March 14, 1961, covered settlements of royalty made by the Operator for the period July 19, 1957, through December 31, 1960. The results shown in that review were determined subject to verification by site audit of the Operator's accounts and production records. This audit included such verification of that period and extends the period of audit through February 28, 1961.

The audit did not disclose any improprieties requiring adjustment.

IV. CONCLUSION

A summary of production, sales, and royalty due and paid during the period covered by this audit and during the period July 19, 1957, through February 28, 1961, follows:

	January 1, 1961 through February 28, 1961	July 19, 1957 through February 28, 1961
Ore Mined:		
Below 500 level, tons	1,576	9,954
Other tons	5,161	42,958
Concentrates Sold:		
Short wet tons	306.33	3,111.24
Short dry tons	285.38	2,931.34
Gross Smelter Value	$46,252.08	$457,044.29
Less: Hauling	(4,909.21)	(50,892.63)
Sampling, etc.	(63.64)	(662.60)
Smelter returns	$41,279.23	$405,489.06
Portion subject to DMGA royalty	$11,463.54	$ 77,823.14
Royalty due at 5%	$ 573.18	$ 3,891.15
Royalty paid	$ 573.18	$ 3,891.15
Balance of royalty due	$ -0-	$ -0-

The audit has confirmed the accuracy and propriety of the royalty payments received by the regional office applicable to sale of

concentrates during the period July 19, 1957, through February 28, 1961. It also has determined that all indicated sales during such period have been properly accounted for.

Settlements had not been received from the smelter in connection with all shipments during March and April 1961 at the time of this audit. Mr. Smith stated that, as soon as such settlements are received, the Government will be paid royalty in line with the established practice.

C. E. Fisher

C. E. Fisher, IMZ Auditor

June 6, 1961

MME Form 22
Dec. 60

DEPARTMENT OF THE INTERIOR
Office of Minerals Exploration

CHECK SHEET OF EXAMINING ENGINEER

Operator's Name and Address

Clayton Silver Mines
Scott Building
P. O. Box 890
Wallace, Idaho

Contract No. **Idm-E1108** Docket No. **DMEA-4659**

Prepared by (Signature) D.H. Jackson | Date 5/4/61

Yes	No		
	X	1.	(a) Does the Operator stockpile ore subject to royalty repayment?
			(b) If so, is segregation and identification procedure adequate?
X		2.	(a) Does the Operator commingle production subject to DMEA or OME royalties with exempt production?
X			(b) If so, is the allocation of the commingled production equitable?
	X	3.	(a) Does the Operator stockpile mine or mill rejects (low grade ore, tailing, middlings, etc.) that may have potential value within the royalty payment period?
			(b) If so, are adequate records maintained on such material to protect the Government's interest?
X		4.	Are the assay controls in effect adequate?
X		5.	Does the manner of disposing of production give the Government its fair royalty returns?
X		6.	Do your periodic examinations of operations indicate the Operator is properly reporting his production of ores subject to DMEA or OME royalties?
	X	7.	Does the Operator buy from or sell to other Operators?

8. Current status of property. (Check one).

- [X] Operating.
- [ ] Inactive.
- [ ] Abandoned.

Date of last production if not operating.

Comment on items 1(b), 2(b), 3(b), and 4 to 6, if answer is No:

84861-60

CAAA Div.

EXTRA COPY
O. M. E.
RECEIVED JUN 19 1961
DATE INITIALS CODE
800

So. 157 Howard Street
Spokane 4, Washington
June 16, 1961

Mr. Norman Smith
General Manager
Clayton Silver Mines
Sunshine Star Route
Kellogg, Idaho

Re: DSEA-4659 (Lead-Zinc)
Clayton Mine
Custer County, Idaho
Contract Idm-11103

Dear Mr. Smith:

There is enclosed for your information and files a copy of a Royalty Audit Report and Certificate dated June 6, 1961, on the sale of lead concentrates produced from the Clayton mine, located in Custer County, Idaho, for the period January 1, 1961, through February 28, 1961, on which royalty is payable to the U. S. Government under the terms of the above-referenced contract dated July 19, 1957, as amended.

Sincerely yours,

D. R. Maclaren
Acting Field Officer, OME
Region I

Enclosure

MLSmalser:mls
cc: Fiscal Section, Div. of Admin. Services
Office of the Secretary w/orig. Royalty Audit Report and Certificate

CAAA Div., OME
OME
Reading copies to:
Nolan
Hobbs
Guild

E-1108

For royalty payment of $348.88, dated April 13, 1961, see transmittal letter file.

E-1108

For royalty payment of $224.30, dated March 23, 1961, see transmittal letter file.

OFFICE OF MINERALS EXPLORATION
CONTRACT ADMINISTRATION AND AUDIT DIVISION

REPORT OF ROYALTY REVIEW

I have reviewed the files of the Washington office pertaining to Contract No. Idm-E1108, Docket No. DMEA-4659 (lead-zinc), dated July 19, 1957, with

Clayton Silver Mines
Sunshine Star Route
Kellogg, Idaho

for the purpose of determining the amount of royalty due the U. S. Government on production of minerals from property referred to as the Clayton Mine located in Custer County, Idaho, during the period July 19, 1957, through December 31, 1960.

In accordance with Article 6, Annex I, and Amendment No. 2 of the contract, royalty is payable on all minerals mined or produced from the land described in Article 2 of the contract, except portions of known ore bodies above the 500 level, and on any minerals transported through any workings driven under the contract, for a period of 11 years from the date of the contract or until the total net amount contributed by the Government without interest is fully repaid, whichever occurs first. A Report of Review dated September 15, 1960, indicated accepted costs under the exploration contract amounting to $129,260.40 with the Government's contribution, on a 50 percent basis, being $64,630.20.

The status of the project, the scope of review, and the reasons therefor are stated on page 2.

This review established the total sales of lead concentrates from ore mined during the period from the area subject to royalty to be $66,359.60. Royalty due the Government at rates specified in the contract is $3,317.97. The royalty account of this project as of February 21, 1961, was found to be:

Total Royalty Due	$3,317.97
Total Royalty Paid	3,317.97
Balance of Royalty Due	$ -0-

E. D. Talbert
E. D. Talbert, OME Auditor

March 14, 1961

Idm-E1108 Clayton Silver Mines DMEA-4659

STATUS OF PROJECT, SCOPE OF REVIEW
AND REASONS THEREFOR

Production from the area subject to DMEA royalty began during July 1959. Such ore is commingled prior to sampling with ore from above the 500 level, which is not subject to the DMEA royalty. After concentration, shipments are made to the East Helena Plant of the American Smelting and Refining Co.

The Operator pays royalty monthly, after receipt of the applicable settlement sheets, on that portion of the gross proceeds that is in direct proportion to the tons removed each month from below the 500 level over the total tons mined each month. This procedure, which was proposed by the Operator in a letter dated February 16, 1959, was accepted by the DMEA Field Team, Region I, in a letter dated February 24, 1959.

This review included examination, recomputation, and tabulation of the Operator's monthly statements and the settlement sheets. The tabulations, which are subject to verification by site audit of the Operator's accounts and production records, are filed with my review work-papers.

A summary of the findings, which include the Operator's production through December 1960 and the royalty payment thereon received February 21, 1961, follows:

	Ore Mined	Concentrates Sold Wet	Concentrates Sold Dry
Below 500 level, tons	8,378)		
Other, tons	39,797)	2,804.41	2,647.96
Gross smelter value			$410,792.21
Less: Hauling		$45,983.42	
Sampling, etc.		598.96	46,582.38
Smelter returns			$364,209.83
Portion subject to DMEA royalty			66,359.60
Royalty @ 5%			3,317.97

This review was made in lieu of an on-site audit of the Operator's accounts and records for the following reasons:

(a) Reports, correspondence, and other documents in the files indicate that all production during the period covered by this review has been reported and proper royalty has been paid; and

(b) The administrative cost to the Government of an on-site royalty audit at this time would be excessive in relation to the amount of possible additional royalty which might be disclosed.

MME Form 22
Ap[illegible] 59

DEPARTMENT OF THE INTERIOR
Office of Minerals Exploration

CHECK SHEET OF EXAMINING ENGINEER

Operator's Name CIAYTON SILVER MINES

Address Scott Building
P. O. Box 890

Wallace, Idaho

Exploration Contract No. Idm-E1108

Docket No. DMEA-4659 (Pb-Zn)

		Check One Yes	Check One No.
1.	(a) Does the Operator stockpile ore subject to royalty repayment?		X
	(b) If so, is segregation and identification procedure adequate?		
2.	(a) Does Operator commingle production subject to DMEA or OME royalties with exempt production?	X	
	(b) If so, do you consider the allocation of the commingled production equitable?	X	
*3.	(a) Does the Operator stockpile mine or mill rejects (low grade ore, tailing, middlings, etc.) that may have potential value within the royalty payment period?		X
	(b) If so, are adequate records maintained on such material to protect the Government's interest?		
4.	Do you consider the assay controls in effect are adequate?	X	
5.	Do you consider that the manner of disposing of production gives the Government its fair royalty returns?	X	
6.	Do your periodic examinations of operations indicate the Operator is properly reporting his production of ores subject to DMEA or OME royalties?	X	
7.	Does the Operator buy from or sell to other Operators?		X
8.	Comment on any item 2 (b) to 6 if answer is No.		

***3(a) To avoid stream pollution mill tailings are held in a tailings pond but have no foreseeable potential value.**

3/ 7/61
Date

~~Mining Engineer~~
D. R. MacLaren
Geologist

53362

MAR 13 1961
O.M.E.

OFFICIAL FILE COPY
O. M. E
RECEIVED MAR 21 1961

DATE	INITIALS	CODE

No. 157 Howard Street
Spokane 4, Washington
March 17, 1961

Clayton Silver Mines
Scott Building
P. O. Box 890
Wallace, Idaho

Re: IDMA-4659 (Lead-Zinc)
Clayton Mine
Custer County, Idaho
Contract IDm-21108

Gentlemen:

There is enclosed for your information and files a copy of a Report of Royalty Review dated March 14, 1961, for the purpose of determining the amount of royalty due the U. S. Government on production of minerals from property referred to as the Clayton mine located in Custer County, Idaho, during the period July 19, 1957, through December 31, 1960.

Sincerely yours,

Donald R. MacLaren

D. R. MacLaren
Acting Field Officer, OME
Region I

Enclosure

cc: Fiscal Section, Div. of Admin. Services
Office of the Secretary w/orig. Report of Royalty Review

CAAA Div., OME
OME(2)
Director
Reg. Geol.
BLM

MAR 1 4 1961

Memorandum

To: Acting Field Officer, Region I

From: E. D. Talbert, Acting Chief (Signed) E. D. Talbert
Contract Administration and Audit Division

Subject: DMEA-4659 (Lead-Zinc)
Clayton Silver Mines
Clayton Mine
Custer County, Idaho
Contract Idm-E1108

The original and two copies of a Report of Royalty Review covering the subject contract are attached. If you concur in the facts stated therein, please make the following distribution:

(a) Original to the Fiscal Section, Division of Administrative Services, Office of the Secretary, Department of the Interior, Washington 25, D. C.;
(b) One copy to the Operator; and
(c) One copy for your files.

As evidence of your concurrence, a copy of your memorandum transmitting the original report to the Fiscal Section should be furnished this Division. If for any reason you do not concur, the original and both copies of the report should be returned to this Division with your comments.

Attachments

EDTalbert/ama
March 14, 1961

Copy to: Docket
Director's Reading File
CA & A Division
Mr. Rothrock

FEB 28 1961

Memorandum

To: Acting Field Officer, Region I

From: E. D. Talbert, Acting Chief (Signed) E. D. Talbert
Contract Administration and Audit Division

Subject: DMRA-4659 (Lead-Zinc)
Clayton Silver Mines
Clayton Mine
Custer County, Idaho
Contract Idm-E1108

This Division is in the process of preparing a Report of Royalty Review on the subject contract. Your submission of an original and one copy of MMS Form 22, Check Sheet of Examining Engineer, will be appreciated.

EDTalbert/ama
February 28, 1961

Copy to: Docket
Director's Reading File
CA & A Division

E-1108

For royalty payment of $170.32, dated February 21, 1961, see transmittal letter file.

E-1108

For royalty payment of $270.72, dated January 24, 1961, see transmittal letter file.

E-1108

For royalty payment of $391.64, dated January 12, 1961, see transmittal letter file.

So. 157 Howard Street
Spokane 4, Washington
December 14, 1960

EXTRA COPY
O. M. E
RECEIVED DEC 27 1960
DATE
CODE
800

Memorandum

To: Chief, Fiscal Section, Division of Administrative Services
Office of the Secretary, Department of the Interior
Washington, D. C.

From: Acting Field Officer, Region I, OME

Subject: Royalty payments
BMMA-4659 (Lead-Zinc)
Clayton Silver Mines
Clayton Silver Mine
Custer County, Idaho
Contract Ida-K1108
Appropriation Symbol: BMMA-14x4401

On the copy of our memorandum dated November 9, 1960, which you return to us the receipt shows royalty payments to date as $2,130.18, with which sum our records agree.

With our memorandum dated November 23, 1960, we enclosed a check from the Operator in the amount of $355.11. However, the receipt on the copy returned to us shows royalty payments to date as being only $1,930.18. It appears that this latter figure should be $2,485.29.

Clarification of the total royalty paid to this account will be appreciated.

D. R. MacLaren

Dear Mr. MacLaren:
Royalty payments as of this date 12/16/60 on Contract No. 1108 total $2,485.29. The receipt sent showing 1,930.18 was in error. Sorry.

/s/ Opal M. Alexander
Assistant Chief, Accounting Unit

800

No. 157 Howard Street
Spokane 4, Washington
December 14, 1960

Memorandum

To: Chief, Fiscal Section, Division of Administrative Services
Office of the Secretary, Department of the Interior
Washington, D. C.

From: Acting Field Officer, Region I, OME

Subject: Royalty payments
DMEA-4659 (Lead-Zinc)
Clayton Silver Mines
Clayton Silver Mine
Custer County, Idaho
Contract Ida-11108
Appropriation Symbol: DMEA-14x4401

On the copy of our memorandum dated November 9, 1960, which you return to us the receipt shows royalty payments to date as $2,130.18, with which sum our records agree.

With our memorandum dated November 25, 1960, we enclosed a check from the Operator in the amount of $355.11. However, the receipt on the copy returned to us shows royalty payments to date as being only $1,950.18. It appears that this latter figure should be $2,485.29.

Clarification of the total royalty paid to this account will be appreciated.

D. R. Maclaren

cc: OME(3)
CPF
Director
Econ. Geol.
BLM

E-1108

For royalty payment of $355.11, dated November 23, 1960, see Transmittal letter file.

E-1108

For royalty payment of $555.11, dated November 9, 1960, see transmittal letter file.

E-1108

For royalty payment of $129.88, dated October 6, 1960, see transmittal letter file.

E-1108

For royalty payment of $229.53, dated September 1, 1960, see transmittal letter file.

E-1108

For royalty payment of $323.98, dated August 3, 1960, see transmittal letter file.

E-1108

For royalty payment of $142.70, dated July 1, 1960, see transmittal letter file.

E-1108

For royalty payment of $135.92, dated May 25, 1960, see transmittal letter file.

E-1108

For royalty payment of $116.42, dated April 15, 1960, see transmittal letter file.

E-1108

For royalty payment of $267.06, dated April 4, 1960, see transmittal letter file.

E-1108

For royalty payment of $195.94, dated March 25, 1960, see transmittal letter file.

E-1108

For Certificate of Deposit No. 521, dated September 18, 1959, giving royalty payment of $33.64, see E-152.

COPY
O. M. E.
RECEIVED MAR 2 1959

DATE	INITIALS	CODE
		800

So. 157 Howard Street
Spokane 4, Washington

February 24, 1959

Mr. Norman M. Smith
General Manager
Clayton Silver Mines
Sunshine Star Route
Kellogg, Idaho

Re: Docket No. DMEA-4059 (Lead-Zinc)
Clayton Silver Mines
Custer County, Idaho
Contract No. Idm-E1108

Dear Mr. Smith:

Thank you for your letter of February 16, 1959, in which you propose a method of computing royalty due the Government from ore produced from below the 500 level.

The method you propose will be acceptable. You should send us, with each royalty check, a tabulation similar to the one in your letter showing the breakdown of the ore by levels and the computation of royalty based on the percentage of the total shipment that comes from below the 500 level. You should also include a signed copy of the smelter settlement sheet. It will not be necessary to have the smelter send us a copy.

Royalty checks should be made payable to Office of Minerals Exploration and sent to A. E. Weissenborn at the above address as soon as possible after you receive payment from the smelter.

By Field Team Region I

A. E. Weissenborn, Exec. Officer
U. S. Geological Survey

Wing G. Arnew, Member
U. S. Bureau of Mines

cc: OME (2) w/incoming
USBM (2)
USBM(AD)
CPF

W. H. YEAMAN, PRESIDENT
YAKIMA WASHINGTON

NORMAN M. SMITH
OPERATING ENGINEER

CLAYTON SILVER MINES

ENGINEERING OFFICE
SUNSHINE STAR ROUTE
KELLOGG, IDAHO

EXTRA COPY
1959
CODE
INITIALS

February 16, 1959

Mr. A. E. Weissenborn, Executive Officer
DMEA Field Team, Region I
South 157 Howard Street
Spokane, Washington

Dear Mr. Weissenborn:

Re: Docket No. DMEA No. 4659
Contract No. E 1108
Royalties

During the progress of completing the drifting project under this contract, most probably some ores will be salvaged from this work. These ores will come from below the 500 level and will be subject to royalty payments to the government.

Before these ores are reached I would like a clear understanding on just exactly how we can arrive at royalty payments, how and when they may be made, and still not greatly inconvenience our operations.

The rate of royalty in our case will be 5% of gross proceeds (net smelter returns) as defined. But the royalty will apply only on the proceeds from ore below 500 level. At the mine, ore from both above and below 500 level will be hoisted and commingled in the coarse ore bin at the shaft collar. No regular sampling is done ahead of the coarse ore bin.

This commingled ore is then crushed, concentrated and shipped to the smelter. After the end of each month we make up a production report in which data are compiled showing tons of ore produced from each working place, concentrates produced, and gross value of concentrates.

The contract under Article 6, section h, "Notice to Purchaser", provides, among other things, that the operator "- - - -authorize and direct the purchaser to pay the royalty direct to the Government- - - -". In our case here where only a portion of the proceeds are subject to royalty, and those portions varying from month to month, it will be quite impossible to direct the smelter in advance on what proceeds the royalty would apply. Therefore, I would very much like to have you consider and approve a method for royalty calculation and payments along the following lines.

1959

The gross proceeds upon which royalties will apply will be that portion of the total proceeds each month that is in direct proportion to ores taken each month from below 500 level over the total tons mined each month.

Example:

Month of _____	
Ore from below 500 level	600 tons
Ore from above 500 level	2,400 tons
Total Mined	3,000 tons
Total Gross Proceeds	$30,000

Royalty:

600 tons is 20% of 3,000 tons
20% of $30,000 = $6,000
Royalty: 5% of $6,000 = $300.00

The royalty payment would be made by Clayton Silver Mines supported by the necessary data and documents to substantiate the calculations. Copies of the settlement sheets could be furnished either by the operator or the smelter, whichever you prefer.

Payments and reportings would be made some 30 days following the end of each month. It usually takes between 18 and 22 days from date of shipment to date of settlement, thus the 30-day period for reporting.

Your consideration on this problem will surely be appreciated. If you should care to discuss this further with me, please do not hesitate to let me know. I plan to be in Spokane sometime the latter part of February.

Sincerely yours,

Norman M. Smith
General Manager
Clayton Silver Mines

jh

OFFICE OF MINERALS EXPLORATION
CONTRACT ADMINISTRATION AND AUDIT DIVISION

REPORT OF REVIEW

I have reviewed the Monthly Reports of:

Clayton Silver Mines
Kellogg, Idaho

pertaining to Exploration Project Contract Idm-81108, DMEA No. 4659, including Amendments Nos. 1 and 2, for July 1957 to July 1960, inclusive, covering a lead-zinc project at the Clayton Mine, Custer County, Idaho.

My review included an examination of the Monthly Reports (Forms MF-104) and supporting documents, comparison of the claimed costs with the contract and pertinent schedules, confirmation of work performed by reference to Field Office reports and correspondence, and a determination of the reasonableness and propriety of the costs.

This review was made in lieu of a final audit of the Operator's accounts and records for the reason that:

> All of the acceptable costs was under a contract provision for contribution by the Government on the basis of fixed unit costs for work performed.

The findings of this review are stated in the following summary and the attached schedule:

Total cost billed by Operator		$129,260.40
Exceptions:		
Prior to this review	$ -0-	
Herewith	-0-	-0-
Acceptable cost		$129,260.40

The contract calls for a 50 percent contribution of the allowable costs by the Government. Therefore, if the project is otherwise accepted as having met the terms of the contract, payments as follows are valid and proper:

Payable on audited claim	$ 64,630.20
Paid to date	62,969.08
Balance due Operator	$ 1,661.12

September 15, 1960

E. D. Talbert, OME Auditor

Contract Idm-E1108 Clayton Silver Mines DMEA-4659

Acceptable Costs:

Extension of shaft		300 ft.	@	$149.00	$ 44,700.00
Station, 800 level		3,000 cu.ft.	@	.62	1,860.00
Sump, 800 level		4,000 cu.ft.	@	.62	2,480.00
Loading pockets, 800 level		3,000 cu.ft.	@	.62	1,860.00
Drifts and crosscuts:					
800 DS	35.0 ft.				
800 DSW	136.3 "				
803 XCW	45.0 "				
804 XCW	46.0 "				
813 XCW	75.5 "				
814 XCE	36.0 "				
814 XCW	49.6 "				
800 DN	1,702.6 "	2,126 ft.	@	33.90	72,071.40
Long hole drilling		470 ft.	@	1.00	470.00
Samples assayed		25 ea.	@	3.00	69.00
Engineer-geologist		25 mos.	@	250.00	5,750.00
Total					$129,260.40

EXTRA COPY
O. M. E
RECEIVED SEP 23 1960

DATE		CODE
		800

So. 157 Howard Street
Spokane 4, Washington
September 20, 1960

Clayton Silver Mines
Scott Building
P. O. Box 890
Wallace, Idaho

Re: DMEA-4659 (Lead-Zinc)
Clayton Mine
Custer County, Idaho
Contract Idm-E1108

Gentlemen:

Enclosed for your information and files is a Report of Review in lieu of a final audit dated September 15, 1960, for July 1957 to July 1960, inclusive, covering a lead-zinc project at the Clayton mine, Custer County, Idaho.

The audit discloses that $1,661.12 is payable and will be scheduled for payment in the near future.

Sincerely yours,

Donald R. MacLaren

D. R. MacLaren
Acting Field Officer, OME
Region I

Enclosure

cc: Fiscal Section w/orig. of Report of Review, orig. and 2 copies of final (July 1960) MF-104 & MF-104A, and Narrative Report
Contract Admin. & Audit Div., OME
OME(2)
DRF

SEP 15 1960

Memorandum

To: Acting Field Officer, Region I

From: E. D. Talbert, Acting Chief (Signed) E. D. Talbert
Contract Administration and Audit Division

Subject: DMEA-4659 (Lead-Zinc)
Clayton Silver Mines
Clayton Mine
Custer County, Idaho
Contract Ida-E1108

As requested by your September 13 memorandum a Report of Review, in lieu of a final audit of the subject project, has been prepared. The original and two copies are attached.

If you concur in the facts as stated in this Report of Review, please make the distribution prescribed by section 4 of OME Circular 2, dated February 17, 1960. If for any reason you do not concur please return the original and both copies to this Division with your comments.

The originals of the Operator's final (July 1960) Forms MF-104 and MF-104A, which were submitted with your September 13 memorandum, are returned herewith.

Attachments

EDTalbert/ama
September 15, 1960

Copy to: Docket
Director's Reading File
CA & A Division
Mr. Rothrock

UNITED STATES
DEPARTMENT OF THE INTERIOR
OFFICE OF MINERALS EXPLORATION
So. 157 Howard Street
Spokane 4, Washington
September 13, 1960

OFFICIAL FILE COPY
O. M. E.
RECEIVED SEP 15 1960

DATE	INITIALS	CODE
9-15	gad	vvo
		~~600~~
		~~500~~
		800

Memorandum

To: Chief, Contract Administration & Audit Division

From: Acting Field Officer, Region I

Subject: DMEA-4659 (Lead-Zinc)
Clayton Silver Mines
Clayton Mine
Custer County, Idaho
Contract Idm-E1108

Work under the subject contract was terminated effective July 19, 1960, under the terms of Amendment No. 2.

The number of units of work completed by the Operator and accepted as conforming to contract specifications were:

Shaft sinking	300 feet
800 level station cutting	3,000 cubic feet
800 level sump	4,000 " "
800 level loading pocket	3,000 " "
Drifting and crosscutting	2,126 feet
Long hole drilling	470 "
Samples assayed	23
Engineer-geologist	23 months

An acceptable engineering and geological report was received from the Operator on September 6, 1960.

A Report of Review, in lieu of a final audit is in order and requested. For this purpose the original copies of the final (July 1960) MF-104 and MF-104A are attached.

D R MacLaren

D. R. MacLaren

Enclosures

EXTRA COPY
O. M. E
RECEIVED AUG 19 1960
DATE | INITIALS | CODE
800

So. 157 Howard Street
Spokane 4, Washington
August 15, 1960

Mr. Norman M. Smith
General Manager
Clayton Silver Mines
Engineering Office
Sunshine Star Route
Kellogg, Idaho

Re: DMEA-4659 (Lead-Zinc)
Clayton Mine
Custer County, Idaho
Contract No. Idm-E1108

Dear Mr. Smith:

Thank you for your letter of August 6 regarding a measurement discrepancy in the 800 N drift. I expect to visit the property the 26th of this month, at which time I will check with Mr. Legard the final measurement to the face as of July 19, 1960, the effective termination date under the terms of Amendment No. 2.

If the authorized drifting and crosscutting was not completed as of July 19, 1960, the pseudocertification in item 3 of Amendment No. 2 will be effective. In any case under Annex I of the contract, royalty is due the Government from any production transported through the DMEA workings.

We will appreciate receiving your final account and final report at your earliest convenience so that we may have a final audit made and close our books on this contract.

Sincerely yours,

D. R. MacLaren
Acting Field Officer, OME
Region I

cc: OME(3)
CPF
DRF

Form MF-104 (Rev.)
(April 1952)

SEP 23 1960
O.M.E.

Sch. 413 800

Budget Bureau No. 42-R1036.5

UNITED STATES
DEPARTMENT OF THE INTERIOR
DEFENSE MINERALS EXPLORATION ADMINISTRATION
OPERATOR'S MONTHLY REPORT AND VOUCHER

Month of July 01, 1960 Docket No. DMEA 4659 Contract No. E-1108
Operator's Name Clayton Silver Mines Minerals Pb-Zn
Address Kellogg, Idaho
Contract Amount, $ 130,840. Government Participation: 50 % Amount, $ 65,420.

ITEMS OF COSTS	FOR OPERATOR'S USE			FOR GOVERNMENT USE ONLY		
	Monthly Total	Totals Previously Reported	Totals To Date	Approved Monthly Total	Approved Totals Previously Reported	Approved Totals To Date
(1) Independent Short Form Contracts:						
~~Drifting~~ Pocket	- -	1,860.00	1,860.00			
~~Drifting~~ Sump	- -	2,480.00	2,480.00			
~~Crosscutting~~ Sta.	- -	1,860.00	1,860.00			
Drifting	3322.20	68,749.20	72,071.40			
Shaft	- -	44,700.00	44,700.00			
(2) Labor and Supervision: Long Holes	- -	470.00	470.00			
Labor						
Supervision						
Technical Services	- -	5,750.00	5,750.00			
(3) Operating Mat'ls. and Supplies:						
Timber						
Explosives						
Pipe						
Track						
(4) Operating Equipment:						
Rental						
Purchase						
Depreciation						
(5) Initial Rehabilitation and Repairs						
(6) New Bldgs., Improvements, etc.						
(7) Miscellaneous:						
Repairs to Equipment						
Sampling and Analysis	- -	69.00	69.00			
Payroll Taxes						
Liability Insurance						
(8) Contingencies (specify):						
TOTALS	3322.20	126,938.20	129,260.40	3322.20	125,938.20	129,260.40

I certify that the above bill is correct and just and that payment therefor has not been received.

Date 8/22/60 *Payee Clayton Silver Mines

Per [signature] Title General Manager

*When a voucher is signed or receipted in the name of a company or corporation, the name of the person writing the company or corporate name, as well as the capacity in which he signs, must appear. For example: "John Doe Company, per John Smith, Secretary," or "Treasurer," as the case may be.

NOTE.—Title 18, U. S. Code (Crimes), section 1001, makes it a criminal offense to make a willfully false statement or representation to any department or agency of the United States as to any matter within its jurisdiction.

(Instructions on reverse)

Pursuant to authority vested in me, I certify that this account is correct and proper for payment in the amount of:

$ 1,661.12

Signature [signature]
(Authorized Certifying Officer)

Date 9/23/60 Vou. No. 1204

(See other side)

(For Government use only)

CERTIFICATION BY GOVERNMENT REPRESENTATIVE:

I certify that to the best of my knowledge and belief the contractor submitting this voucher is operating a Defense Minerals Exploration Administration project under Contract No. ..... in accordance with the terms of the contract.

Signature ..... Title ..... Date .....

APPROVAL BY DMEA EXECUTIVE OFFICER OR ALTERNATE:

Signature ..... Title ..... Date .....

MONTHLY REPORT OF OPERATOR

The Operator (Contractor) of an exploration project is required to make a monthly report to the Government through the Regional Executive Officer. This report consists of three parts as follows:

(a) *Form MF-104—Operator's Monthly Report and Voucher.*—This form details expenditures and constitutes a voucher for reimbursing the Operator for the Government's share of costs;

(b) *Form MF-104A—Operator's Unit Cost and Progress Report.*—This is a statistical report of expenditures which shows costs for the various types of operation; and

(c) *Narrative.*—A concise narrative description of progress made, results accomplished, and any unusual difficulties encountered must be furnished as an attachment to this Report and Voucher. Wherever possible, the narrative is to be illustrated with maps or sketches showing formations penetrated and location and assays of samples taken as well as advances in workings. In the case of diamond drilling or churn drilling, the location and inclination of holes is to be shown on a map; logs and assays also are to be submitted.

The Monthly Report of Operator should be prepared in an original and four copies all of which must be sent to the Executive Officer of the Region not later than the 15th of the month following.

Preparation of Form MF-104—Operator's Monthly Report and Voucher.—All the applicable spaces in Form MF-104 should be filled in by the Operator, and the Operator or his agent should sign the certification in the lower left corner of the form.

The items of costs are arranged in the order they appear in Article 6 (a) of Form MF-200 (Revised February 1952), however, this form is readily adaptable for use in reporting activities under other contract forms.

Under Item (1) delete words "Short Form" if the contract is a sub-contract under Form MF-200; and delete word "Independent" if the contract reported is on Form MF-200 (A). Also, report work paid for on a unit basis under contract Form MF-200 as though it were performed under an independent contract.

Under Item (2) include labor, supervision and technical services incurred for the exploratory operations. Do not include labor, supervision and technical services used for work performed under items (5) and (6).

Under Item (3) include the costs of material and supplies used in the project other than that used under items (5) and (6).

Under Item (4) appear the three types of operating equipment expenditures, that is, rental, purchase and depreciation. The expenditures made for renting equipment belonging to a third party will be reported under "Rental". The amount paid or duly obligated for payment for the purchase of equipment will be reported under "Purchase". The amount of expenditures due the Operator to reimburse him for depreciation of equipment owned will be reported under "Depreciation".

Item (5) comprises costs of labor, supervision, technical services, materials, etc., which are used in the initial rehabilitation and repair of existing buildings, installations, fixtures, and equipment. These costs, therefore, should not be reported under items (2) and (3).

Item (6) includes the labor, supervision, technical services, materials, etc., used in the installation or construction of new buildings, fixed improvements, etc., necessary for the project. These costs, therefore, should not be reported under items (2) and (3).

Item (7) covers miscellaneous types of expenditure such as payroll taxes, liability insurance, workmen's compensation insurance, repairs to equipment and sampling and analysis. Only that part of payroll taxes, liability insurance and workmen's compensation which are paid by the operator should be reported under item (7). The share paid by the employee as a payroll deduction is to be included under item (2) as labor costs.

Item (8) includes any unforeseen costs not included in the other seven categories.

The original of Form MF-104 when submitted for reimbursable expenses incurred under contract Form MF-200 must be supported by original documentation or by certified copies of purchase orders, payrolls or transcripts of payrolls, unless such documentation has been waived by the Regional Executive Officer. This certification may be stated thus, "Certified True Copy (or Transcript)", followed by appropriate signature. If the Executive Officer of the Region determines that a contract under Form MF-200 should have an "on-site" audit, that is, a Government auditor should make an audit of the Operator's books and records of account, the Operator need not support his monthly voucher with original or certified documents except in cases of equipment purchases whose individual costs exceed $50.00. In these cases the original or a certified copy of the purchase order or invoice should be attached to the Monthly Voucher. N. B.—Only the *original* of Form MF-104 is required to be documented. The four copies of Form MF-104 are not to be thus supported.

Form MF-104 submitted for reimbursement under fixed price contracts on Form MF-200 (A), however, are not required to be supported by documentation of any kind. The Operator will submit his claim under item (1) of Form MF-104 by deleting as stated above the word "Independent" and by showing the number of feet or other units immediately after the appropriate descriptive word, such as, drilling, bulldozing, crosscutting, drifting, etc., and giving the "Monthly Total" amount due. "Totals Previously Reported", and "Totals to Date" columns should also be filled in.

GPO 872893

Form MF-104A
(April 1952)

Budget Bureau No. 42-R1151.2

UNITED STATES
DEPARTMENT OF THE INTERIOR

DEFENSE MINERALS EXPLORATION ADMINISTRATION

OPERATOR'S UNIT COST AND PROGRESS REPORT

Month of July 1960 Docket No. DMEA 4659 Contract No. E-1108
Operator's Name Clayton Silver Mines Minerals Pb-Zn
Address Kellogg, Idaho

OPERATION	Unit	Costs This Month	Units This Month	Costs to Date	Units to Date	Unit Costs to Date	Authorized by Contract: Units	Authorized by Contract: Unit Costs
Drifting	ft.	3322.20	98.0	72,071.40	2126.0	33.90	2150	$33.90
Crosscutting								
Raising								
Shafts	ft.	- -	- -	44,700.00	300	$149.	300	$149.
Winzes								
Excavation								
~~Drilling: Core~~ Sta.	cu. ft.	- -	- -	1,860.00	3000	0.62	3000	0.62
~~Churn~~ Pocket	cu. ft.	- -	- -	1,860.00	3000	0.62	3000	0.62
~~Auger~~ Sump	cu. ft.	- -	- -	2,480.00	4000	0.62	4000	0.62
~~Stripping~~ Long Holes	Ft.	- -	- -	470.00	470	1.00	700	1.00
~~Trenching~~ Assays		- -	- -	69.00	23	3.00	200	3.00
Test Pits								
Roads and Trails								
Total Distributed Costs		3322.20	-	123,510.40				Total Costs Authorized by Contract
Operating Equipment Purchased								
Initial Rehabilitation and Repairs								
New Buildings, Improvements, etc.								
Engineering		- -		5,750.00				5,750
Total Costs		3322.20		129,260.40				130,840

The undersigned company, and the official executing this certification on its behalf, hereby certify that the information contained in this report is correct and complete to the best of their knowledge and belief.

Date 8/22/60 Operator Clayton Silver Mines

Per [signature] Title General Manager

Remarks:

NOTE.—Title 18, U. S. Code (Crimes), section 1001, makes it a criminal offense to make a willfully false statement or representation to any department or agency of the United States as to any matter within its jurisdiction.

(Instructions on reverse)

(For Government use only)

INSTRUCTIONS

Preparation of Form MF-104A—Operator's Unit Cost and Progress Report.—Applicable places on Form 104A should be filled in by the Operator. The purpose of this form is twofold as follows: (1) to furnish the supervising engineers and other administrators with statistical information necessary to better determine the progress of the project; and (2) to furnish more permanent information on mining costs for future use. The more important phases of operation on which permanent information is desired have been outlined in the form. There are blank lines, however, for those unusual phases which may need to be reported for a particular project. It will be necessary for the Operator to distribute his costs among the applicable phases reported with the exception of three items the costs of which are not to be distributed by the Operator. These three items are: "Operating Equipment Purchased", "Initial Rehabilitation and Repairs", and "New Buildings, Improvements, etc." The reason for not distributing these items on a monthly basis is doubtless clear to the Operator, since such distribution might well overstate the cost for any one month or period short of the entire contract period.

Form MF-104A has been designed to tie in with Form MF-104 for both monthly and cumulative costs. The "Total Costs" on Form MF-104A for each month should equal the monthly "Total Costs" as reported on Form MF-104. This is also true of the "Total Costs To Date".

In preparing Form MF-104A, it will be necessary frequently to distribute certain costs over a number of items. For instance, supervisory and engineering costs may have to be distributed over several phases, such as, drifting, crosscutting, raising, etc., provided that these items were reported active for the month. Such distributions should be made on the basis of time spent on the various phases, on man days of labor charged to such phases, or on some other equitable basis. "Operating Equipment", "Initial Rehabilitation and Repairs", and "New Buildings Improvements, etc.", will be distributed to the several phases of the project by the Washington Office of DMEA at the close of the project if determined necessary. The last two columns headed "Authorized by Contract" will be filled in by the Operator if such information is found in the contract. This information is usually a part of Exhibit "A" of the contract. A space for remarks has been provided for the use of the Operator to call attention to any unusual circumstances causing excessive or disproportionate unit costs.

SEP 22 1960
OFFICE OF THE SECRETARY
FISCAL SECTION

GPO 872894

CLAYTON SILVER MINES

Docket No. DMEA 4659
Contract No. Idm. E-1108

N A R R A T I V E

July, 1960

The above named contract expired after July 19, 1960. Up to that time the advance for July on the 800 North Drift was 98.0 feet to a point 225.0 feet north of survey station 814 and 95.3 feet north of survey station 817.

This advance followed a northerly striking fault dipping approximately 66° east and mineralized with pyrite and minor galena on the west side over a width varying from 2' to 5'.

Submitted by:

Norman W. Smith

NORMAN W. SMITH

Form MF-104 (Rev.)
(April 1952)

RECEIVED
JUL 22 1960
U.S.G.S.
SPOKANE, WASH.

Sch 164

Budget Bureau No. 42-R1036.5

UNITED STATES
DEPARTMENT OF THE INTERIOR
DEFENSE MINERALS EXPLORATION ADMINISTRATION
OPERATOR'S MONTHLY REPORT AND VOUCHER

Month of June 1960 Docket No. DMEA 4659 Contract No. E-1108
Operator's Name Clayton Silver Mines Minerals Pb-Zn
Address Kellogg, Idaho
Contract Amount, $ 130,840. Government Participation: 50 % Amount, $ 65,420.

ITEMS OF COSTS	FOR OPERATOR'S USE: Monthly Total	Totals Previously Reported	Totals To Date	FOR GOVERNMENT USE ONLY: Approved Monthly Total	Approved Totals Previously Reported	Approved Totals To Date
(1) Independent Short Form Contracts:						
~~Drilling~~ Pocket	- -	1,860.00	1,860.00			
~~Bulldozing~~ Sump	- -	2,480.00	2,480.00			
~~Crosscutting~~ Sta.	- -	1,860.00	1,860.00			
Drifting	2657.76	66091.44	68,749.20			
Long Haling Shaft	- -	44,700.00	44,700.00			
(2) Labor and Supervision:	—	470.00	470.00			
Labor						
Supervision						
Technical Services	- -	5,750.00	5,750.00			
(3) Operating Mat'ls. and Supplies:						
Timber						
Explosives						
Pipe						
Track						
(4) Operating Equipment:						
Rental						
Purchase						
Depreciation						
(5) Initial Rehabilitation and Repairs						
(6) New Bldgs., Improvements, etc.						
(7) Miscellaneous:						
Repairs to Equipment						
Sampling and Analysis	—	69.00	69.00			
Payroll Taxes						
Liability Insurance						
(8) Contingencies (specify):						
TOTALS	2657.76	123,280.44	125,938.20	2657.76	123,280.44	125,938.20

AUG 3 1960 O.M.E

I certify that the above bill is correct and just and that payment therefor has not been received.
Date 7/20/60 *Payee Clayton Silver Mines
Per M. M. Smith Title General Manager

*When a voucher is signed or receipted in the name of a company or corporation, the name of the person writing the company or corporate name, as well as the capacity in which he signs, must appear. For example: "John Doe Company, per John Smith, Secretary," or "Treasurer," as the case may be.

NOTE.—Title 18, U. S. Code (Crimes), section 1001, makes it a criminal offense to make a willfully false statement or representation to any department or agency of the United States as to any matter within its jurisdiction.

(Instructions on reverse)

Pursuant to authority vested in me, I certify that this account is correct and proper for payment in the amount of:
$ 1,328 88

Signature oa
(Authorized Certifying Officer)
Date 8/3/60 Vou. No. 512
(See other side)

(For Government use only)

CERTIFICATION BY GOVERNMENT REPRESENTATIVE:

I certify that to the best of my knowledge and belief the contractor submitting this voucher is operating a Defense Minerals Exploration Administration project under Contract No. ..... in accordance with the terms of the contract.

Signature ..... Title ..... Date .....

APPROVAL BY DMEA EXECUTIVE OFFICER OR ALTERNATE:

Signature ..... Title ..... Date .....

MONTHLY REPORT OF OPERATOR

The Operator (Contractor) of an exploration project is required to make a monthly report to the Government through the Regional Executive Officer. This report consists of three parts as follows:

(a) *Form MF-104—Operator's Monthly Report and Voucher.*—This form details expenditures and constitutes a voucher for reimbursing the Operator for the Government's share of costs;

(b) *Form MF-104A—Operator's Unit Cost and Progress Report.*—This is a statistical report of expenditures which shows costs for the various types of operation; and

(c) *Narrative.*—A concise narrative description of progress made, results accomplished, and any unusual difficulties encountered must be furnished as an attachment to this Report and Voucher. Wherever possible, the narrative is to be illustrated with maps or sketches showing formations penetrated and location and assays of samples taken as well as advances in workings. In the case of diamond drilling or churn drilling, the location and inclination of holes is to be shown on a map; logs and assays also are to be submitted.

The Monthly Report of Operator should be prepared in an original and four copies all of which must be sent to the Executive Officer of the Region not later than the 15th of the month following.

Preparation of Form MF-104—Operator's Monthly Report and Voucher.—All the applicable spaces in Form MF-104 should be filled in by the Operator, and the Operator or his agent should sign the certification in the lower left corner of the form.

The items of costs are arranged in the order they appear in Article 6 (a) of Form MF-200 (Revised February 1952), however, this form is readily adaptable for use in reporting activities under other contract forms.

Under Item (1) delete words "Short Form" if the contract is a sub-contract under Form MF-200; and delete word "Independent" if the contract reported is on Form MF-200 (A). Also, report work paid for on a unit basis under contract Form MF-200 as though it were performed under an independent contract.

Under Item (2) include labor, supervision and technical services incurred for the exploratory operations. Do not include labor, supervision and technical services used for work performed under items (5) and (6).

Under Item (3) include the costs of material and supplies used in the project other than that used under items (5) and (6).

Under Item (4) appear the three types of operating equipment expenditures, that is, rental, purchase and depreciation. The expenditures made for renting equipment belonging to a third party will be reported under "Rental". The amount paid or duly obligated for payment for the purchase of equipment will be reported under "Purchase". The amount of expenditures due the Operator to reimburse him for depreciation of equipment owned will be reported under "Depreciation".

Item (5) comprises costs of labor, supervision, technical services, materials, etc., which are used in the initial rehabilitation and repair of existing buildings, installations, fixtures, and equipment. These costs, therefore, should not be reported under items (2) and (3).

Item (6) includes the labor, supervision, technical services, materials, etc., used in the installation or construction of new buildings, fixed improvements, etc., necessary for the project. These costs, therefore, should not be reported under items (2) and (3).

Item (7) covers miscellaneous types of expenditure such as payroll taxes, liability insurance, workmen's compensation insurance, repairs to equipment and sampling and analysis. Only that part of payroll taxes, liability insurance and workmen's compensation which are paid by the operator should be reported under item (7). The share paid by the employee as a payroll deduction is to be included under item (2) as labor costs.

Item (8) includes any unforeseen costs not included in the other seven categories.

The original of Form MF-104 when submitted for reimbursable expenses incurred under contract Form MF-200 must be supported by original documentation or by certified copies of purchase orders, payrolls or transcripts of payrolls, unless such documentation has been waived by the Regional Executive Officer. This certification may be stated thus, "Certified True Copy (or Transcript)", followed by appropriate signature. If the Executive Officer of the Region determines that a contract under Form MF-200 should have an "on-site" audit, that is, a Government auditor should make an audit of the Operator's books and records of account, the Operator need not support his monthly voucher with original or certified documents except in cases of equipment purchases whose individual costs exceed $50.00. In these cases the original or a certified copy of the purchase order or invoice should be attached to the Monthly Voucher. N. B.—Only the *original* of Form MF-104 is required to be documented. The four copies of Form MF-104 are not to be thus supported.

Form MF-104 submitted for reimbursement under fixed price contracts on Form MF-200 (A), however, are not required to be supported by documentation of any kind. The Operator will submit his claim under item (1) of Form MF-104 by deleting as stated above the word "Independent" and by showing the number of feet or other units immediately after the appropriate descriptive word, such as, drilling, bulldozing, crosscutting, drifting, etc., and giving the "Monthly Total" amount due. "Totals Previously Reported", and "Totals to Date" columns should also be filled in.

GPO 872893

Form MF-104A
(April 1952)

Budget Bureau No. 42-R1151.2

RECEIVED
JUL 22 1960
U. S.
SPOKANE, WASH.

UNITED STATES
DEPARTMENT OF THE INTERIOR
DEFENSE MINERALS EXPLORATION ADMINISTRATION
OPERATOR'S UNIT COST AND PROGRESS REPORT

Month of June 1960 Docket No. DMEA 4659 Contract No. E-1108
Operator's Name Clayton Silver Mines Minerals Pb-Zn
Address Kellogg, Idaho

OPERATION	Unit	Costs This Month	Units This Month	Costs to Date	Units to Date	Unit Costs to Date	Authorized by Contract: Units	Authorized by Contract: Unit Costs
Drifting	ft.	2657.76	78.4	68,749.20	2028	33.90	[illegible]	$33.00
Crosscutting								
Raising								
Shafts	ft.	--	--	44,720.00	300	$149.	300	$149.
Winzes								
Excavation Sta.	cu. ft.	--	--	1,860.00	3000	0.62	3000	0.62
Drilling: Core								
Churn Pocket	cu. ft.	--	--	1,860.00	3000	0.62	3000	0.62
Auger Sump	cu. ft.	--	--	2,480.00	4000	0.62	4000	0.62
Stripping Long Haling	ft	--	--	470.00	470	1.00	700	1.00
Trenching Assay	Sample	--	--	69.00	23	3.00	200	3.00
Test Pits								
Roads and Trails								
Total Distributed Costs		2657.76		120,188.20				Total Costs Authorized by Contract
Operating Equipment Purchased								
Initial Rehabilitation and Repairs								
New Buildings, Improvements, etc.								
Engineering		--		5,750.00				9,750
Total Costs		2657.76		125,938.20				150,860

The undersigned company, and the official executing this certification on its behalf, hereby certify that the information contained in this report is correct and complete to the best of their knowledge and belief.

Date 7/20/60 Operator Clayton Silver Mines

Per M. M. Smith Title General Manager

Remarks:

NOTE.—Title 18, U. S. Code (Crimes), section 1001, makes it a criminal offense to make a willfully false statement or representation to any department or agency of the United States as to any matter within its jurisdiction.

(Instructions on reverse)

(For Government use only)

INSTRUCTIONS

Preparation of Form MF-104A—Operator's Unit Cost and Progress Report.—Applicable places on Form 104A should be filled in by the Operator. The purpose of this form is twofold as follows: (1) to furnish the supervising engineers and other administrators with statistical information necessary to better determine the progress of the project; and (2) to furnish more permanent information on mining costs for future use. The more important phases of operation on which permanent information is desired have been outlined in the form. There are blank lines, however, for those unusual phases which may need to be reported for a particular project. It will be necessary for the Operator to distribute his costs among the applicable phases reported with the exception of three items the costs of which are not to be distributed by the Operator. These three items are: "Operating Equipment Purchased", "Initial Rehabilitation and Repairs", and "New Buildings, Improvements, etc." The reason for not distributing these items on a monthly basis is doubtless clear to the Operator, since such distribution might well overstate the cost for any one month or period short of the entire contract period.

Form MF-104A has been designed to tie in with Form MF-104 for both monthly and cumulative costs. The "Total Costs" on Form MF-104A for each month should equal the monthly "Total Costs" as reported on Form MF-104. This is also true of the "Total Costs To Date".

In preparing Form MF-104A, it will be necessary frequently to distribute certain costs over a number of items. For instance, supervisory and engineering costs may have to be distributed over several phases, such as, drifting, crosscutting, raising, etc., provided that these items were reported active for the month. Such distributions should be made on the basis of time spent on the various phases, on man days of labor charged to such phases, or on some other equitable basis. "Operating Equipment", "Initial Rehabilitation and Repairs", and "New Buildings Improvements, etc.", will be distributed to the several phases of the project by the Washington Office of DMEA at the close of the project if determined necessary. The last two columns headed "Authorized by Contract" will be filled in by the Operator if such information is found in the contract. This information is usually a part of Exhibit "A" of the contract. A space for remarks has been provided for the use of the Operator to call attention to any unusual circumstances causing excessive or disproportionate unit costs.

GPO 872894

CLAYTON SILVER MINES

Docket No. DMEA 4659

Contract No. Idm. E-1108

N A R R A T I V E

June, 1960

Advance on the 800 level, north end, amounted to 78.4 feet in June. The North drift advanced 42.4 feet and a crosscut to the east from a point 45 feet north of Station 814 was advanced 36 feet.

A very heavy flow of water in the north heading delayed progress for some time in June.

Submitted by:

NORMAN M. SMITH

RECEIVED
JUL 22 1960
U. S. G. S.
SPOKANE, WASH.

Form MF-104a (Rev.) (April 1952)

RECEIVED JUN 16 1960 U.S. GS SPOKANE

UNITED STATES
DEPARTMENT OF THE INTERIOR
DEFENSE MINERALS EXPLORATION ADMINISTRATION

JUN 27 1960 O.M.E.

Budget Bureau No. 42-R1036.5

OPERATOR'S MONTHLY REPORT AND VOUCHER

Month of May, 1960 Docket No. DMEA 4659 Contract No. E-1108

Operator's Name Clayton Silver Mines Minerals Pb-Zn

Address Kellogg, Idaho

Contract Amount, $ 130,840. Government Participation: 50% Amount, $ 65,420.

ITEMS OF COSTS	FOR OPERATOR'S USE			FOR GOVERNMENT USE ONLY		
	Monthly Total	Totals Previously Reported	Totals To Date	Approved Monthly Total	Approved Totals Previously Reported	Approved Totals To Date
(1) Independent Short Form Contracts:						
~~Drifting~~ Pocket	- -	1,860.00	1,860.00			
~~Drifting~~ Sump	- -	2,480.00	2,480.00			
Crosscutting Sta.	- -	1,860.00	1,860.00			
Drifting	5386.41	60 704.73	66 091.44			
Shaft	- -	44,700.00	44,700.00			
Long Hole Drilling	174.00	296.00	470.00			
(2) Labor and Supervision:						
Labor						
Supervision						
Technical Services	- -	5,750.00	5,750.00			
(3) Operating Mat'ls. and Supplies:						
Timber						
Explosives						
Pipe						
Track						
(4) Operating Equipment:						
Rental						
Purchase						
Depreciation						
(5) Initial Rehabilitation and Repairs						
(6) New Bldgs., Improvements, etc.						
(7) Miscellaneous:						
Repairs to Equipment						
Sampling and Analysis	33.00	36.00	69.00			
Payroll Taxes						
Liability Insurance						
(8) Contingencies (specify):						
TOTALS	5593.71	117,686.73	123,280.44	5593.71	117,686.73	123,280.44

I certify that the above bill is correct and just and that payment therefor has not been received.

Date 6-14-60 *Payee Clayton Silver Mines

Per W. M. Smith Title General Manager

*When a voucher is signed or receipted in the name of a company or corporation, the name of the person writing the company or corporate name, as well as the capacity in which he signs, must appear. For example: "John Doe Company, per John Smith, Secretary," or "Treasurer," as the case may be.

NOTE.—Title 18, U. S. Code (Crimes), section 1001, makes it a criminal offense to make a willfully false statement or representation to any department or agency of the United States as to any matter within its jurisdiction.

(Instructions on reverse)

Pursuant to authority vested in me, I certify that this account is correct and proper for payment in the amount of:

$ 2796 85

Signature (Authorized Certifying Officer)

Date 6/24/60 Vou. No. 5383

(See other side)

(For Government use only)

CERTIFICATION BY GOVERNMENT REPRESENTATIVE:

I certify that to the best of my knowledge and belief the contractor submitting this voucher is operating a Defense Minerals Exploration Administration project under Contract No. ..... in accordance with the terms of the contract.

Signature ..... Title ..... Date .....

APPROVAL BY DMEA EXECUTIVE OFFICER OR ALTERNATE:

Signature ..... Title ..... Date .....

MONTHLY REPORT OF OPERATOR

The Operator (Contractor) of an exploration project is required to make a monthly report to the Government through the Regional Executive Officer. This report consists of three parts as follows:

(a) *Form MF-104—Operator's Monthly Report and Voucher.*—This form details expenditures and constitutes a voucher for reimbursing the Operator for the Government's share of costs;

(b) *Form MF-104A—Operator's Unit Cost and Progress Report.*—This is a statistical report of expenditures which shows costs for the various types of operation; and

(c) *Narrative.*—A concise narrative description of progress made, results accomplished, and any unusual difficulties encountered must be furnished as an attachment to this Report and Voucher. Wherever possible, the narrative is to be illustrated with maps or sketches showing formations penetrated and location and assays of samples taken as well as advances in workings. In the case of diamond drilling or churn drilling, the location and inclination of holes is to be shown on a map; logs and assays also are to be submitted.

The Monthly Report of Operator should be prepared in an original and four copies all of which must be sent to the Executive Officer of the Region not later than the 15th of the month following.

Preparation of Form MF-104—Operator's Monthly Report and Voucher.—All the applicable spaces in Form MF-104 should be filled in by the Operator, and the Operator or his agent should sign the certification in the lower left corner of the form.

The items of costs are arranged in the order they appear in Article 6 (a) of Form MF-200 (Revised February 1952), however, this form is readily adaptable for use in reporting activities under other contract forms.

Under Item (1) delete words "Short Form" if the contract is a sub-contract under Form MF-200; and delete word "Independent" if the contract reported is on Form MF-200 (A). Also, report work paid for on a unit basis under contract Form MF-200 as though it were performed under an independent contract.

Under Item (2) include labor, supervision and technical services incurred for the exploratory operations. Do not include labor, supervision and technical services used for work performed under items (5) and (6).

Under Item (3) include the costs of material and supplies used in the project other than that used under items (5) and (6).

Under Item (4) appear the three types of operating equipment expenditures, that is, rental, purchase and depreciation. The expenditures made for renting equipment belonging to a third party will be reported under "Rental". The amount paid or duly obligated for payment for the purchase of equipment will be reported under "Purchase". The amount of expenditures due the Operator to reimburse him for depreciation of equipment owned will be reported under "Depreciation".

Item (5) comprises costs of labor, supervision, technical services, materials, etc., which are used in the initial rehabilitation and repair of existing buildings, installations, fixtures, and equipment. These costs, therefore, should not be reported under items (2) and (3).

Item (6) includes the labor, supervision, technical services, materials, etc., used in the installation or construction of new buildings, fixed improvements, etc., necessary for the project. These costs, therefore, should not be reported under items (2) and (3).

Item (7) covers miscellaneous types of expenditure such as payroll taxes, liability insurance, workmen's compensation insurance, repairs to equipment and sampling and analysis. Only that part of payroll taxes, liability insurance and workmen's compensation which are paid by the operator should be reported under item (7). The share paid by the employee as a payroll deduction is to be included under item (2) as labor costs.

Item (8) includes any unforeseen costs not included in the other seven categories.

The original of Form MF-104 when submitted for reimbursable expenses incurred under contract Form MF-200 must be supported by original documentation or by certified copies of purchase orders, payrolls or transcripts of payrolls, unless such documentation has been waived by the Regional Executive Officer. This certification may be stated thus, "Certified True Copy (or Transcript)", followed by appropriate signature. If the Executive Officer of the Region determines that a contract under Form MF-200 should have an "on-site" audit, that is, a Government auditor should make an audit of the Operator's books and records of account, the Operator need not support his monthly voucher with original or certified documents except in cases of equipment purchases whose individual costs exceed $50.00. In these cases the original or a certified copy of the purchase order or invoice should be attached to the Monthly Voucher. N. B.—Only the *original* of Form MF-104 is required to be documented. The four copies of Form MF-104 are not to be thus supported.

Form MF-104 submitted for reimbursement under fixed price contracts on Form MF-200 (A), however, are not required to be supported by documentation of any kind. The Operator will submit his claim under item (1) of Form MF-104 by deleting as stated above the word "Independent" and by showing the number of feet or other units immediately after the appropriate descriptive word, such as, drilling, bulldozing, crosscutting, drifting, etc., and giving the "Monthly Total" amount due. "Totals Previously Reported", and "Totals to Date" columns should also be filled in.

GPO 872893

Form MF-104A
(April 1952)

Budget Bureau No. 42-R1151.2

RECEIVED
JUN 16 1960
U.S. DEPT. OF INT.

JUN 27 1960
O.M.E.

UNITED STATES
DEPARTMENT OF THE INTERIOR
DEFENSE MINERALS EXPLORATION ADMINISTRATION
OPERATOR'S UNIT COST AND PROGRESS REPORT

Month of May 1960 Docket No. DMEA 4659 Contract No. M-1108
Operator's Name Clayton Silver Mines Minerals Pb-Zn
Address Kellogg, Idaho

OPERATION	UNIT	COSTS THIS MONTH	UNITS THIS MONTH	COSTS TO DATE	UNITS TO DATE	UNIT COSTS TO DATE	AUTHORIZED BY CONTRACT Units	AUTHORIZED BY CONTRACT Unit Costs
Drifting	ft.	5386.71	158.9	66091.44	1949.6	33.90	2150	$33.90
Crosscutting								
Raising								
Shafts	ft.	- -	- -	44,700.00	300	$149.	300	$149.
Winzes								
Excavation Drilling: Core Sta.	cu. ft.	- -	- -	1,860.00	3000	0.62	3000	0.62
Churn Pocket	cu. ft.	- -	- -	1,860.00	3000	0.62	3000	0.62
Auger Sump	cu. ft.	- -	- -	2,480.00	4000	0.62	4000	0.62
~~Stripping~~ Long Hole Drilling	ft	174.00	174.	470.00	470	1.00	700	1.00
~~Trenching~~ Assays	Samples	33.00	11	69.00	23	3.00	200	3.00
Test Pits								
Roads and Trails								
TOTAL DISTRIBUTED COSTS		5593.71		117,530.44				TOTAL COSTS AUTHORIZED BY CONTRACT
Operating Equipment Purchased								
Initial Rehabilitation and Repairs								
New Buildings, Improvements, etc.								
Engineering		- -		5,750.00				5,750
TOTAL COSTS		5593.71		123,280.44				130,840

The undersigned company, and the official executing this certification on its behalf, hereby certify that the information contained in this report is correct and complete to the best of their knowledge and belief.

Date 6-14-60 Operator Clayton Silver Mines

Per M. M. Smith Title General Manager

NOTE.—Title 18, U. S. Code (Crimes), section 1001, makes it a criminal offense to make a willfully false statement or representation to any department or agency of the United States as to any matter within its jurisdiction.

REMARKS:

(Instructions on reverse)

(For Government use only)

INSTRUCTIONS

Preparation of Form MF-104A—Operator's Unit Cost and Progress Report.—Applicable places on Form 104A should be filled in by the Operator. The purpose of this form is twofold as follows: (1) to furnish the supervising engineers and other administrators with statistical information necessary to better determine the progress of the project; and (2) to furnish more permanent information on mining costs for future use. The more important phases of operation on which permanent information is desired have been outlined in the form. There are blank lines, however, for those unusual phases which may need to be reported for a particular project. It will be necessary for the Operator to distribute his costs among the applicable phases reported with the exception of three items the costs of which are not to be distributed by the Operator. These three items are: "Operating Equipment Purchased", "Initial Rehabilitation and Repairs", and "New Buildings, Improvements, etc." The reason for not distributing these items on a monthly basis is doubtless clear to the Operator, since such distribution might well overstate the cost for any one month or period short of the entire contract period.

Form MF-104A has been designed to tie in with Form MF-104 for both monthly and cumulative costs. The "Total Costs" on Form MF-104A for each month should equal the monthly "Total Costs" as reported on Form MF-104. This is also true of the "Total Costs To Date".

In preparing Form MF-104A, it will be necessary frequently to distribute certain costs over a number of items. For instance, supervisory and engineering costs may have to be distributed over several phases, such as, drifting, crosscutting, raising, etc., provided that these items were reported active for the month. Such distributions should be made on the basis of time spent on the various phases, on man days of labor charged to such phases, or on some other equitable basis. "Operating Equipment", "Initial Rehabilitation and Repairs", and "New Buildings Improvements, etc.", will be distributed to the several phases of the project by the Washington Office of DMEA at the close of the project if determined necessary. The last two columns headed "Authorized by Contract" will be filled in by the Operator if such information is found in the contract. This information is usually a part of Exhibit "A" of the contract. A space for remarks has been provided for the use of the Operator to call attention to any unusual circumstances causing excessive or disproportionate unit costs.

GPO 872894

CLAYTON SILVER MINES

Docket No. DMEA 4659
Contract No. Idm. E-1108

N A R R A T I V E

Month of May, 1960

The 800 North Drift was advanced almost due north a distance of 78.3 feet. Of this distance 50 feet were thru ore and 28.3 feet were in waste. The 813 West Crosscut was advanced west a distance of 30.5 feet all thru waste. No. 814 West Crosscut located 100 feet north of 813 West Crosscut was driven westward a distance of 49.6 feet all in waste.

Five long holes were drilled for a total of 174 feet. Plat for location and assays is enclosed.

Eleven samples had been assayed by the end of the month. Their values and locations are shown on enclosed plats.

Enclosed are:

Plan of North end of 800 drift,	1" = 50'
Plat showing long holes,	1" = 20'
Plat showing 813 crosscut,	1" = 20'
Plat showing ore in 800 drift and 814 West Crosscut,	1" = 20'

Submitted by:

Norman M. Smith
NORMAN M. SMITH

RECEIVED
JUN 16 1960
M. S. A.
SPOKANE, WASH.

EXTRA COPY O. M. E RECEIVED JUN 6 1960		
DATE	INITIALS	CODE
		800

So. 157 Howard Street
Spokane 4, Washington
June 3, 1960

Memorandum

To: Chief, Division of Field Operations, OME

From: Acting Field Officer, Region I

Subject: Docket No. DMEA 4659 (Lead Zinc)
Clayton Silver Mines
Custer County, Idaho
Contract No. Idm E1108

Enclosed are three copies of a letter dated June 1 from Mr. Norman M. Smith in regard to the above referenced contract, and our reply of this date.

OME Circular 1, paragraph 2, Payments, lists the distribution of all operator's monthly reports (voucher, progress report and narrative). It seems that it has been the practice of the Certifying Officer, Region I, since early 1952 to send to the operator a copy of the MF-104 showing the corrections and deletions made so that he may see what has been disallowed or what changes have been made and then correct his records accordingly.

As Mr. MacLaren is in the field, I am forwarding Mr. Smith's letter to you for reply.

Mary L. Smelser
For: D. R. MacLaren

Enclosures

cc: DRF

EXTRA COPY
O. M. E
RECEIVED JUN 6 1960

DATE	INITIALS	CODE

So. 157 Howard Street
Spokane 4, Washington
June 3, 1960

Mr. Norman M. Smith
General Manager
Clayton Silver Mines
Scott Building
P. O. Box 890
Wallace, Idaho

Re: Docket No. DMEA-4659 (Lead Zinc)
Clayton Silver Mines
Custer County, Idaho
Contract No. Idm-E1108

Dear Mr. Smith:

In the absence of Mr. MacLaren I am acknowledging receipt of your letter of June 1. Effective March 1, 1960, all contract payments and collections are being made by the Fiscal Section, Division of Administrative Services, Office of the Secretary, Department of the Interior, Washington 25, D. C.

I am forwarding copies of your letter to our OME Washington office for reply.

Sincerely yours,

Mary L. Smelser
Secretary to
D. R. MacLaren
Acting Field Officer, OME
Region I

cc: OME(3) w/3 cys incoming
and reply
OMP

NORMAN M. SMITH
OPERATING ENGINEER

CLAYTON SILVER MINES
ENGINEERING OFFICE
BURKEMIA STAR ROUTE
KELLOGG, IDAHO

June 1, 1960

Mr. D. R. MacLaren
Acting Field Officer, OME
S. 157 Howard Street
Spokane 4, Washington

Re: DMEA Docket No. 4659
Contract No. Idm. E-1108

Dear Mr. MacLaren:

Previous to March 1960, a copy each of Forms MF-104 and MF-104A was returned to us (operator) along with blanks for the following month. We have sufficient blanks to complete the project but we need copies of the reports for our files. Would you arrange to supply us with copies for March and April as well as all following monthly reports.

Sincerely yours,

NORMAN M. SMITH

NMS
m

RECEIVED
JUN 3 1960
U.S.G.S.
SPOKANE, WASH.

Form MF-104 (Rev.)
(April 1952)

RECEIVED
MAY 11 1960
U. S. G. S.
SPOKANE, WASH.

1772

UNITED STATES
DEPARTMENT OF THE INTERIOR
DEFENSE MINERALS EXPLORATION ADMINISTRATION

Budget Bureau No. 42-R1036.5

MAY 23 1960

OPERATOR'S MONTHLY REPORT AND VOUCHER

Month of April, 1960 Docket No. DMEA 4659 Contract No. E-1108
Operator's Name Clayton Silver Mines Minerals Pb-Zn
Address Kellogg, Idaho
Contract Amount, $130,840. Government Participation: 50 % Amount, $65,420.

ITEMS OF COSTS	FOR OPERATOR'S USE			FOR GOVERNMENT USE ONLY		
	Monthly Total	Totals Previously Reported	Totals To Date	Approved Monthly Total	Approved Totals Previously Reported	Approved Totals To Date
(1) Independent Short Form Contracts:						
~~Drilling~~ Pocket	- -	1,860.00	1,860.00		1,860.00	1,860.00
~~Building~~ Sump	- -	2,480.00	2,480.00		2,480.00	2,480.00
~~Crosscutting~~ Sta.	- -	1,860.00	1,860.00		1,860.00	1,860.00
~~Drifting~~	5285.01	55 419.72	60 704.73	5,285.01	55,419.72	60,704.73
Shaft	- -	44,700.00	44,700.00		44,700.00	44,700.00
Long Hole Drilling	372.00	—	372.00	296.00	—	296.00
(2) Labor and Supervision:						
Labor						
Supervision						
Technical Services	- -	5,750.00	5,750.00		5,750.00	5,750.00
(3) Operating Mat'ls. and Supplies:						
Timber						
Explosives						
Pipe						
Track						
(4) Operating Equipment:						
Rental						
Purchase						
Depreciation						
(5) Initial Rehabilitation and Repairs						
(6) New Bldgs., Improvements, etc.						
(7) Miscellaneous:						
Repairs to Equipment						
Sampling and Analysis	36.00	—	36.00	36.00	—	36.00
Payroll Taxes						
Liability Insurance						
(8) Contingencies (specify):						
TOTALS	5693.01	112,069.72	117,762.73	5617.01	112,069.72	117,686.73

I certify that the above bill is correct and just and that payment therefor has not been received.

Date 5/9/60 *Payee Clayton Silver Mines

Per M. M. Smith Title General Manager

*When a voucher is signed or receipted in the name of a company or corporation, the name of the person writing the company or corporate name, as well as the capacity in which he signs, must appear. For example: "John Doe Company, per John Smith, Secretary," or "Treasurer," as the case may be.

NOTE.—Title 18, U. S. Code (Crimes), section 1001, makes it a criminal offense to make a willfully false statement or representation to any department or agency of the United States as to any matter within its jurisdiction.

(Instructions on reverse)

Pursuant to authority vested in me, I certify that this account is correct and proper for payment in the amount of:

$ 2808 50

Signature
(Authorized Certifying Officer)

Date 5/20/60 Vou. No. 4759

(See other side)

(For Government use only)

CERTIFICATION BY GOVERNMENT REPRESENTATIVE:

I certify that to the best of my knowledge and belief the contractor submitting this voucher is operating a Defense Minerals Exploration Administration project under Contract No. ..... in accordance with the terms of the contract.

Signature ..... Title ..... Date .....

APPROVAL BY DMEA EXECUTIVE OFFICER OR ALTERNATE:

Signature ..... Title ..... Date .....

MONTHLY REPORT OF OPERATOR

The Operator (Contractor) of an exploration project is required to make a monthly report to the Government through the Regional Executive Officer. This report consists of three parts as follows:

(a) *Form MF-104—Operator's Monthly Report and Voucher.*—This form details expenditures and constitutes a voucher for reimbursing the Operator for the Government's share of costs;

(b) *Form MF-104A—Operator's Unit Cost and Progress Report.*—This is a statistical report of expenditures which shows costs for the various types of operation; and

(c) *Narrative.*—A concise narrative description of progress made, results accomplished, and any unusual difficulties encountered must be furnished as an attachment to this Report and Voucher. Wherever possible, the narrative is to be illustrated with maps or sketches showing formations penetrated and location and assays of samples taken as well as advances in workings. In the case of diamond drilling or churn drilling, the location and inclination of holes is to be shown on a map; logs and assays also are to be submitted.

The Monthly Report of Operator should be prepared in an original and four copies all of which must be sent to the Executive Officer of the Region not later than the 15th of the month following.

Preparation of Form MF-104—Operator's Monthly Report and Voucher.—All the applicable spaces in Form MF-104 should be filled in by the Operator, and the Operator or his agent should sign the certification in the lower left corner of the form.

The items of costs are arranged in the order they appear in Article 6 (a) of Form MF-200 (Revised February 1952), however, this form is readily adaptable for use in reporting activities under other contract forms.

Under Item (1) delete words "Short Form" if the contract is a sub-contract under Form MF-200; and delete word "Independent" if the contract reported is on Form MF-200 (A). Also, report work paid for on a unit basis under contract Form MF-200 as though it were performed under an independent contract.

Under Item (2) include labor, supervision and technical services incurred for the exploratory operations. Do not include labor, supervision and technical services used for work performed under items (5) and (6).

Under Item (3) include the costs of material and supplies used in the project other than that used under items (5) and (6).

Under Item (4) appear the three types of operating equipment expenditures, that is, rental, purchase and depreciation. The expenditures made for renting equipment belonging to a third party will be reported under "Rental". The amount paid or duly obligated for payment for the purchase of equipment will be reported under "Purchase". The amount of expenditures due the Operator to reimburse him for depreciation of equipment owned will be reported under "Depreciation".

Item (5) comprises costs of labor, supervision, technical services, materials, etc., which are used in the initial rehabilitation and repair of existing buildings, installations, fixtures, and equipment. These costs, therefore, should not be reported under items (2) and (3).

Item (6) includes the labor, supervision, technical services, materials, etc., used in the installation or construction of new buildings, fixed improvements, etc., necessary for the project. These costs, therefore, should not be reported under items (2) and (3).

Item (7) covers miscellaneous types of expenditure such as payroll taxes, liability insurance, workmen's compensation insurance, repairs to equipment and sampling and analysis. Only that part of payroll taxes, liability insurance and workmen's compensation which are paid by the operator should be reported under item (7). The share paid by the employee as a payroll deduction is to be included under item (2) as labor costs.

Item (8) includes any unforeseen costs not included in the other seven categories.

The original of Form MF-104 when submitted for reimbursable expenses incurred under contract Form MF-200 must be supported by original documentation or by certified copies of purchase orders, payrolls or transcripts of payrolls, unless such documentation has been waived by the Regional Executive Officer. This certification may be stated thus, "Certified True Copy (or Transcript)", followed by appropriate signature. If the Executive Officer of the Region determines that a contract under Form MF-200 should have an "on-site" audit, that is, a Government auditor should make an audit of the Operator's books and records of account, the Operator need not support his monthly voucher with original or certified documents except in cases of equipment purchases whose individual costs exceed $50.00. In these cases the original or a certified copy of the purchase order or invoice should be attached to the Monthly Voucher. N. B.—Only the *original* of Form MF-104 is required to be documented. The four copies of Form MF-104 are not to be thus supported.

Form MF-104 submitted for reimbursement under fixed price contracts on Form MF-200 (A), however, are not required to be supported by documentation of any kind. The Operator will submit his claim under item (1) of Form MF-104 by deleting as stated above the word "Independent" and by showing the number of feet or other units immediately after the appropriate descriptive word, such as, drilling, bulldozing, crosscutting, drifting, etc., and giving the "Monthly Total" amount due. "Totals Previously Reported", and "Totals to Date" columns should also be filled in.

GPO 872893

Form MF-104A
(April 1952)

Budget Bureau No. 42-R1151.2

RECEIVED
MAY 11 1960
U. S. G. S.
SPOKANE, WASH.

UNITED STATES
DEPARTMENT OF THE INTERIOR
DEFENSE MINERALS EXPLORATION ADMINISTRATION

OPERATOR'S UNIT COST AND PROGRESS REPORT

Month of April 1960 Docket No. DMEA 4659 Contract No. 1109
Operator's Name Clayton Silver Mines Minerals Pb-Zn
Address Kellogg, Idaho

OPERATION	UNIT	COSTS THIS MONTH	UNITS THIS MONTH	COSTS TO DATE	UNITS TO DATE	UNIT COSTS TO DATE	AUTHORIZED BY CONTRACT Units	AUTHORIZED BY CONTRACT Unit Costs
Drifting	ft.	5285.01	155.9	60,704.73	1790.7	33.90	2150	$33.90
Crosscutting								
Raising								
Shafts	ft.	--	--	44,700.00	300	$149.	300	$149.
Winzes								
Excavation								
Drilling: Core Sta.	cu. ft.	--	--	1,860.00	3000	0.62	3000	0.62
Churn Pocket	cu. ft.	--	--	1,860.00	3000	0.62	3000	0.62
Auger Surep	cu. ft.	--	--	2,480.00	4000	0.62	4000	0.62
~~Stripping~~ Long Hole Drilling	ft	372.00	372	372.00	372	1.00	700	1.00
~~Trenching~~ Assays	Sample	36.00	12	36.00	12	3.00	200	3.00
Test Pits								
Roads and Trails								
TOTAL DISTRIBUTED COSTS		5693.01		112,012.73				TOTAL COSTS AUTHORIZED BY CONTRACT
Operating Equipment Purchased								
Initial Rehabilitation and Repairs								
New Buildings, Improvements, etc.								
Engineering		--		5,750.00				5,750
TOTAL COSTS		5693.01		117,762.73				130,849

The undersigned company, and the official executing this certification on its behalf, hereby certify that the information contained in this report is correct and complete to the best of their knowledge and belief.

Date 5/9/60 Operator Clayton Silver Mines

Per M. M. Smith Title General Manager

NOTE.—Title 18, U. S. Code (Crimes), section 1001, makes it a criminal offense to make a willfully false statement or representation to any department or agency of the United States as to any matter within its jurisdiction.

REMARKS:
296 ft. allowed
76 ft. disallowed
per D. R. MacLaren
Deducted 76.00 D.A.

(Instructions on reverse)

(For Government use only)

INSTRUCTIONS

Preparation of Form MF–104A—Operator's Unit Cost and Progress Report.—Applicable places on Form 104A should be filled in by the Operator. The purpose of this form is twofold as follows: (1) to furnish the supervising engineers and other administrators with statistical information necessary to better determine the progress of the project; and (2) to furnish more permanent information on mining costs for future use. The more important phases of operation on which permanent information is desired have been outlined in the form. There are blank lines, however, for those unusual phases which may need to be reported for a particular project. It will be necessary for the Operator to distribute his costs among the applicable phases reported with the exception of three items the costs of which are not to be distributed by the Operator. These three items are: "Operating Equipment Purchased", "Initial Rehabilitation and Repairs", and "New Buildings, Improvements, etc." The reason for not distributing these items on a monthly basis is doubtless clear to the Operator, since such distribution might well overstate the cost for any one month or period short of the entire contract period.

Form MF–104A has been designed to tie in with Form MF–104 for both monthly and cumulative costs. The "Total Costs" on Form MF–104A for each month should equal the monthly "Total Costs" as reported on Form MF–104. This is also true of the "Total Costs To Date".

In preparing Form MF–104A, it will be necessary frequently to distribute certain costs over a number of items. For instance, supervisory and engineering costs may have to be distributed over several phases, such as, drifting, crosscutting, raising, etc., provided that these items were reported active for the month. Such distributions should be made on the basis of time spent on the various phases, on man days of labor charged to such phases, or on some other equitable basis. "Operating Equipment", "Initial Rehabilitation and Repairs", and "New Buildings Improvements, etc.", will be distributed to the several phases of the project by the Washington Office of DMEA at the close of the project if determined necessary. The last two columns headed "Authorized by Contract" will be filled in by the Operator if such information is found in the contract. This information is usually a part of Exhibit "A" of the contract. A space for remarks has been provided for the use of the Operator to call attention to any unusual circumstances causing excessive or disproportionate unit costs.

GPO 872894

6157
46677

UNITED STATES
DEPARTMENT OF THE INTERIOR
Office of the Secretary
Accounting Unit
Washington

ADMINISTRATIVE SUSPENSION STATEMENT

Name and Address of Payee: Clayton Silver Mines
Kellogg, Idaho

Amount Claimed:	Differences (Explained Below)	Amount Approved
5,693.01	76.00	5,617.01 Govt. Part. 50% 2,808.50
Bu. Voucher No.	Payee's Invoice No. April 1960 E-1108	Period

EXPLANATION

372 feet of long hole drilling claimed @1.00 per feet	372.00
296 feet allowed	296.00
Difference	76.00

Drilled too close to holes previously drilled:

Long Hole	1W	20 feet
Long Hole	3W	32 "
Long Hole	2E	24 "
		76 feet at 1.00

Any reclaim for items deducted must be supported by the original of this statement and submitted to the office shown above.

Suspension made by:

(Sgd.) Opal M. Alexander

Signature

Assistant
~~ACTING~~ Chief, Accounting Unit

Title

OFFICIAL FILE COPY O. M. E. RECEIVED MAY 23 1960		
DATE	INITIALS	CODE
5-23	gad	VVO
		800

So. 157 Howard Street
Spokane 4, Washington
May 12, 1960

Memorandum

To: Chief, Fiscal Section, Office of the Secretary
Department of the Interior, Washington, D. C.

From: Acting Field Officer, Region I, OME

Subject: Transmittal of Operator's Monthly Voucher, Progress Report, and Narrative for April 1960
Docket No. DMEA-4659 (Lead-Zinc)
Clayton Silver Mines
Custer County, Idaho
Contract No. Idm-E1108
Appropriation Symbol DMEA 14x4401

The Operator drilled 372 feet of long holes as claimed in the voucher. However, the following holes were drilled too close to holes previously drilled and payment for them should be disallowed:

Long hole 1W	20 feet	
Long hole 3W	32 "	
Long hole 2E	24 "	
Total	76 feet at $1.00/ft.	$76.00

Donald R. MacLaren
D. R. MacLaren

CLAYTON SILVER MINES

Docket No. DMEA 4659
Contract No. Idm. E-1108

N A R R A T I V E

Month of April, 1960

The 800 N. Drift was advanced on line a distance of 110.6 feet to a point 80.5' north of Station 813 and 230.1' north of Station 812. A north-westerly crosscut (No. 813W) was run from near Station 813 a distance of 45.3 feet. This crosscut crossed a 20-foot zone of shearing which is weakly mineralized with galena and sphalerite. This zone has a north-South strike, a 70° east dip and lies a few feet west of the 800 N. Drift at Station 813. Five grab samples taken from the muck of this crosscut averaged 1.48 ounces of silver, 1.6% lead and 2.2% zinc and is not considered ore.

The 800 N. Drift entered obliquely the east side of the mineralized zone some 40 feet north of No. 813 W. Crosscut and had followed the hanging wall 20 feet by the end of the month. This 20 feet might be ore, however, no assay of the samples from here are yet available.

Three hundred seventy-two feet of long hole drilling had been done by the end of April. Maps for location and assays are enclosed.

Twelve samples had been assayed by the end of the month. Their values and locations are shown on the accompanying maps and plats.

Enclosed:

(1) 50 scale plan of North portion of Clayton Mine showing mineralized zone near Station 813.

(2) 20 scale plan of 800 North Drift showing geology and assays.

(3) 20 scale plan of 800 North Drift showing locations of long holes A through E.

(4) 20 scale plan of 800 North Drift showing long holes at Station 813 and assays.

RECEIVED
MAY 11 1960
U. S. G. S.
SPOKANE, WASH.

M. M. Smith

CLAYTON SILVER MINES

Locket No. DMLA 4659
Contract No. Idm. E-1108

NARRATIVE

Month of February, 1960

The project, under Contract No. E-1108, was down most of the month of February, 1960 due to a heavy flow of water encountered at the north heading early in the month. By early March the flow had subsided enough to continue the work on a one-shift basis. On March 14th the second shift was added.

For about a week in early February we were pumping an estimated 1800 gallons per minute - the full capacity of all pumps.

Because of such little progress made in February, Forms MF-104 and ME-104A have not been executed, and the progress will be combined with March progress.

Enclosed are four copies of the Clayton plan map showing 800 progress to date.

Submitted by:

Norman M. Smith

NORMAN M. SMITH

RECEIVED
MAR 16 1960
U. S. G. S.
SPOKANE, WASH.

Form MF-102 (Rev.) (April 1952)

RECEIVED APR 6 1960 U. S. G. S. SPOKANE, WASH.

Sch 1614

Budget Bureau No. 42-R1036.5

UNITED STATES
DEPARTMENT OF THE INTERIOR
DEFENSE MINERALS EXPLORATION ADMINISTRATION
OPERATOR'S MONTHLY REPORT AND VOUCHER

Month of Feb + March, 1960 Docket No. DMEA 4659 Contract No. E-1108

Operator's Name Clayton Silver Mines Minerals Pb-Zn

Address Kellogg, Idaho

Contract Amount, $ 130,840. Government Participation: 50 % Amount, $ 65,420.

ITEMS OF COSTS	FOR OPERATOR'S USE			FOR GOVERNMENT USE ONLY		
	Monthly Total	Totals Previously Reported	Totals To Date	Approved Monthly Total	Approved Totals Previously Reported	Approved Totals To Date
(1) Independent Short Form Contracts:						
~~Drilling~~ Pocket	- -	1,860.00	1,860.00			
~~Bulkheading~~ Sump	- -	2,480.00	2,480.00			
~~Crosscutting~~ Sta.	- -	1,860.00	1,860.00			
Drifting	4929.06	50,490.66	55 419.72			
Shaft	- -	44,700.00	44,700.00			
(2) Labor and Supervision:						
Labor						
Supervision						
Technical Services	- -	5,750.00	5,750.00			
(3) Operating Mat'ls. and Supplies:						
Timber						
Explosives						
Pipe						
Track						
(4) Operating Equipment:						
Rental						
Purchase						
Depreciation						
(5) Initial Rehabilitation and Repairs						
(6) New Bldgs., Improvements, etc.						
(7) Miscellaneous:						
Repairs to Equipment						
Sampling and Analysis						
Payroll Taxes						
Liability Insurance						
(8) Contingencies (specify):						
TOTALS	4929.06	107,140.66	112,069.72	4929.06	107,140.66	112,069.72

I certify that the above bill is correct and just and that payment therefor has not been received.

Date 4-5-60 *Payee Clayton Silver Mines

Per [signature] Title General Manager

*When a voucher is signed or receipted in the name of a company or corporation, the name of the person writing the company or corporate name, as well as the capacity in which he signs, must appear. For example: "John Doe Company, per John Smith, Secretary," or "Treasurer," as the case may be.

NOTE.—Title 18, U. S. Code (Crimes), section 1001, makes it a criminal offense to make a willfully false statement or representation to any department or agency of the United States as to any matter within its jurisdiction.

(Instructions on reverse)

Pursuant to authority vested in me, I certify that this account is correct and proper for payment in the amount of:

$ 2,464.53

Signature [signature] (Authorized Certifying Officer)

Date 4/26/60 Vou. No. 4293

(See other side)

(For Government use only)

CERTIFICATION BY GOVERNMENT REPRESENTATIVE:

I certify that to the best of my knowledge and belief the contractor submitting this voucher is operating a Defense Minerals Exploration Administration project under Contract No. ..... in accordance with the terms of the contract.

Signature ..... Title ..... Date .....

APPROVAL BY DMEA EXECUTIVE OFFICER OR ALTERNATE:

Signature ..... Title ..... Date .....

MONTHLY REPORT OF OPERATOR

The Operator (Contractor) of an exploration project is required to make a monthly report to the Government through the Regional Executive Officer. This report consists of three parts as follows:

(a) *Form MF-104—Operator's Monthly Report and Voucher.*—This form details expenditures and constitutes a voucher for reimbursing the Operator for the Government's share of costs;

(b) *Form MF-104A—Operator's Unit Cost and Progress Report.*—This is a statistical report of expenditures which shows costs for the various types of operation; and

(c) *Narrative.*—A concise narrative description of progress made, results accomplished, and any unusual difficulties encountered must be furnished as an attachment to this Report and Voucher. Wherever possible, the narrative is to be illustrated with maps or sketches showing formations penetrated and location and assays of samples taken as well as advances in workings. In the case of diamond drilling or churn drilling, the location and inclination of holes is to be shown on a map; logs and assays also are to be submitted.

The Monthly Report of Operator should be prepared in an original and four copies all of which must be sent to the Executive Officer of the Region not later than the 15th of the month following.

Preparation of Form MF-104—Operator's Monthly Report and Voucher.—All the applicable spaces in Form MF-104 should be filled in by the Operator, and the Operator or his agent should sign the certification in the lower left corner of the form.

The items of costs are arranged in the order they appear in Article 6 (a) of Form MF-200 (Revised February 1952), however, this form is readily adaptable for use in reporting activities under other contract forms.

Under Item (1) delete words "Short Form" if the contract is a sub-contract under Form MF-200; and delete word "Independent" if the contract reported is on Form MF-200 (A). Also, report work paid for on a unit basis under contract Form MF-200 as though it were performed under an independent contract.

Under Item (2) include labor, supervision and technical services incurred for the exploratory operations. Do not include labor, supervision and technical services used for work performed under items (5) and (6).

Under Item (3) include the costs of material and supplies used in the project other than that used under items (5) and (6).

Under Item (4) appear the three types of operating equipment expenditures, that is, rental, purchase and depreciation. The expenditures made for renting equipment belonging to a third party will be reported under "Rental". The amount paid or duly obligated for payment for the purchase of equipment will be reported under "Purchase". The amount of expenditures due the Operator to reimburse him for depreciation of equipment owned will be reported under "Depreciation".

Item (5) comprises costs of labor, supervision, technical services, materials, etc., which are used in the initial rehabilitation and repair of existing buildings, installations, fixtures, and equipment. These costs, therefore, should not be reported under items (2) and (3).

Item (6) includes the labor, supervision, technical services, materials, etc., used in the installation or construction of new buildings, fixed improvements, etc., necessary for the project. These costs, therefore, should not be reported under items (2) and (3).

Item (7) covers miscellaneous types of expenditure such as payroll taxes, liability insurance, workmen's compensation insurance, repairs to equipment and sampling and analysis. Only that part of payroll taxes, liability insurance and workmen's compensation which are paid by the operator should be reported under item (7). The share paid by the employee as a payroll deduction is to be included under item (2) as labor costs.

Item (8) includes any unforeseen costs not included in the other seven categories.

The original of Form MF-104 when submitted for reimbursable expenses incurred under contract Form MF-200 must be supported by original documentation or by certified copies of purchase orders, payrolls or transcripts of payrolls, unless such documentation has been waived by the Regional Executive Officer. This certification may be stated thus, "Certified True Copy (or Transcript)", followed by appropriate signature. If the Executive Officer of the Region determines that a contract under Form MF-200 should have an "on-site" audit, that is, a Government auditor should make an audit of the Operator's books and records of account, the Operator need not support his monthly voucher with original or certified documents except in cases of equipment purchases whose individual costs exceed $50.00. In these cases the original or a certified copy of the purchase order or invoice should be attached to the Monthly Voucher. N. B.—Only the *original* of Form MF-104 is required to be documented. The four copies of Form MF-104 are not to be thus supported.

Form MF-104 submitted for reimbursement under fixed price contracts on Form MF-200 (A), however, are not required to be supported by documentation of any kind. The Operator will submit his claim under item (1) of Form MF-104 by deleting as stated above the word "Independent" and by showing the number of feet or other units immediately after the appropriate descriptive word, such as, drilling, bulldozing, crosscutting, drifting, etc., and giving the "Monthly Total" amount due. "Totals Previously Reported", and "Totals to Date" columns should also be filled in.

GPO 872893

Budget Bureau No. 42-R1151.2

RECEIVED
APR 6 1960
U. S. G. S.
SPOKANE, WASH.

UNITED STATES
DEPARTMENT OF THE INTERIOR
DEFENSE MINERALS EXPLORATION ADMINISTRATION
OPERATOR'S UNIT COST AND PROGRESS REPORT

Feb +

Month of March 1960 Docket No. DMEA 4659 Contract No. E-1108
Operator's Name Clayton Silver Mines Minerals Pb-Zn
Address Kellogg, Idaho

OPERATION	Unit	Costs This Month	Units This Month	Costs to Date	Units to Date	Unit Costs to Date	Authorized by Contract: Units	Authorized by Contract: Unit Costs
Drifting	ft.	4929.06	145.4	55,419.72	1634.8	33.90	2150	$33.90
Crosscutting								
Raising								
Shafts	ft.	- -	- -	44,700.00	300	$149.	300	$149.
Winzes								
Excavation ~~Drilling: Core~~ Sta.	cu. ft.	- -	- -	1,860.00	3000	0.62	3000	0.62
~~Churn~~ Pocket	cu. ft.	- -	- -	1,860.00	3000	0.62	3000	0.62
~~Auger~~ Sump	cu. ft.	- -	- -	2,480.00	4000	0.62	4000	0.62
Stripping								
Trenching								
Test Pits								
Roads and Trails								
Total Distributed Costs		4929.06		106,319.72				Total Costs Authorized by Contract
Operating Equipment Purchased								
Initial Rehabilitation and Repairs								
New Buildings, Improvements, etc.								
Engineering				5,750.00				5,750
Total Costs		4929.06		112,069.72				130,840

The undersigned company, and the official executing this certification on its behalf, hereby certify that the information contained in this report is correct and complete to the best of their knowledge and belief.

Date 4/5/60 Operator Clayton Silver Mines

Per M. M. Smith Title General Manager

Remarks:

NOTE.—Title 18, U. S. Code (Crimes), section 1001, makes it a criminal offense to make a willfully false statement or representation to any department or agency of the United States as to any matter within its jurisdiction.

(Instructions on reverse)

(For Government use only)

APR 28 1960 O.M.E.

INSTRUCTIONS

Preparation of Form MF-104A—Operator's Unit Cost and Progress Report.—Applicable places on Form 104A should be filled in by the Operator. The purpose of this form is twofold as follows: (1) to furnish the supervising engineers and other administrators with statistical information necessary to better determine the progress of the project; and (2) to furnish more permanent information on mining costs for future use. The more important phases of operation on which permanent information is desired have been outlined in the form. There are blank lines, however, for those unusual phases which may need to be reported for a particular project. It will be necessary for the Operator to distribute his costs among the applicable phases reported with the exception of three items the costs of which are not to be distributed by the Operator. These three items are: "Operating Equipment Purchased", "Initial Rehabilitation and Repairs", and "New Buildings, Improvements, etc." The reason for not distributing these items on a monthly basis is doubtless clear to the Operator, since such distribution might well overstate the cost for any one month or period short of the entire contract period.

Form MF-104A has been designed to tie in with Form MF-104 for both monthly and cumulative costs. The "Total Costs" on Form MF-104A for each month should equal the monthly "Total Costs" as reported on Form MF-104. This is also true of the "Total Costs To Date".

In preparing Form MF-104A, it will be necessary frequently to distribute certain costs over a number of items. For instance, supervisory and engineering costs may have to be distributed over several phases, such as, drifting, crosscutting, raising, etc., provided that these items were reported active for the month. Such distributions should be made on the basis of time spent on the various phases, on man days of labor charged to such phases, or on some other equitable basis. "Operating Equipment", "Initial Rehabilitation and Repairs", and "New Buildings Improvements, etc.", will be distributed to the several phases of the project by the Washington Office of DMEA at the close of the project if determined necessary. The last two columns headed "Authorized by Contract" will be filled in by the Operator if such information is found in the contract. This information is usually a part of Exhibit "A" of the contract. A space for remarks has been provided for the use of the Operator to call attention to any unusual circumstances causing excessive or disproportionate unit costs.

GPO 872894

CLAYTON SILVER MINES

Docket No. DMEA 4659
Contract No. Idm. E-1108

N A R R A T I V E

Month of March, 1960

As stated in the "Narrative" report for February, 1960, the total progress for both February and March are being reported here in the March report. During February and March the 800 N. Drift advanced 145.4 feet to a point 119.5 feet north of measuring point No. 812 and 229.5 feet north of survey station No. 811.

Long holes (approx. 50') have been periodically run obliquely 30 degrees to the right and left of the face to determine water volumes ahead and also to explore the nature of the rock. All rock has been dolomite - some alteration is noticed and occasional minor occurrence of galena and pyrite along fracture or bedding planes.

At the end of the month we had approximately 200 g.p.m. extra pump capacity.

Submitted by:

NORMAN M. SMITH

Form MF-104 (Rev.)
(April 1952)

Budget Bureau No. 42-R1036.5

FEB 23 1960
O.M.E.

UNITED STATES
DEPARTMENT OF THE INTERIOR
DEFENSE MINERALS EXPLORATION ADMINISTRATION
OPERATOR'S MONTHLY REPORT AND VOUCHER

Month of January, 1960 Docket No. DMEA 4659 Contract No. E-1108
Operator's Name Clayton Silver Mines Minerals Pb-Zn
Address Kellogg, Idaho
Contract Amount, $130,840. Government Participation: 50 % Amount, $65,420.

ITEMS OF COSTS	FOR OPERATOR'S USE			FOR GOVERNMENT USE ONLY		
	Monthly Total	Totals Previously Reported	Totals To Date	Approved Monthly Total	Approved Totals Previously Reported	Approved Totals To Date
(1) Independent Short Form Contracts:						
~~Drifting~~ Pocket	- -	1,860.00	1,860.00		1860.00	1860.00
~~Building~~ Sump	- -	2,480.00	2,480.00		2480.00	2480.00
~~Crosscutting~~ Sta.	- -	1,860.00	1,860.00		1860.00	1860.00
Drifting	4000.20	46490.46	50490.66	4000.20	46490.46	50490.66
Shaft	- -	44,700.00	44,700.00		44700.00	44700.00
(2) Labor and Supervision:						
Labor						
Supervision						
Technical Services	- -	5,750.00	5,750.00		5750.00	5750.00
(3) Operating Mat'ls. and Supplies:						
Timber						
Explosives						
Pipe						
Track						
(4) Operating Equipment:						
Rental						
Purchase						
Depreciation						
(5) Initial Rehabilitation and Repairs						
(6) New Bldgs., Improvements, etc.						
(7) Miscellaneous:						
Repairs to Equipment						
Sampling and Analysis						
Payroll Taxes						
Liability Insurance						
(8) Contingencies (specify):						
TOTALS	4000.20	103,140.46	107,140.66	4000.20	103,140.46	107,140.66

I certify that the above bill is correct and just and that payment therefor has not been received.

Date 2/5/60 Payee Clayton Silver Mines

Per [signature] Title General Manager

*When a voucher is signed or receipted in the name of a company or corporation, the name of the person writing the company or corporate name, as well as the capacity in which he signs, must appear. For example: "John Doe Company, per John Smith, Secretary," or "Treasurer," as the case may be.

NOTE.—Title 18, U. S. Code (Crimes), section 1001, makes it a criminal offense to make a willfully false statement or representation to any department or agency of the United States as to any matter within its jurisdiction.

(Instructions on reverse)

Pursuant to authority vested in me, I certify that this account is correct and proper for payment in the amount of:

$2000.10

Signature Dorothy F. Long
(Authorized Certifying Officer)

Date 2/15/60 Vou. No. 2341

(See other side)

(For Government use only)

Certification by Government Representative:

I certify that to the best of my knowledge and belief the contractor submitting this voucher is operating a Defense Minerals Exploration Administration project under Contract No. 61108 in accordance with the terms of the contract.

Signature /s/ Stephen W. Goldoff Title Mining Engr. Date 2-10-60

Approval by DMEA Executive Officer or Alternate:

Signature /s/ O. E. Weissenborn Title Exec. Officer Date Feb. 11, 1960

MONTHLY REPORT OF OPERATOR

The Operator (Contractor) of an exploration project is required to make a monthly report to the Government through the Regional Executive Officer. This report consists of three parts as follows:

(a) *Form MF-104—Operator's Monthly Report and Voucher.*—This form details expenditures and constitutes a voucher for reimbursing the Operator for the Government's share of costs;

(b) *Form MF-104A—Operator's Unit Cost and Progress Report.*—This is a statistical report of expenditures which shows costs for the various types of operation; and

(c) *Narrative.*—A concise narrative description of progress made, results accomplished, and any unusual difficulties encountered must be furnished as an attachment to this Report and Voucher. Wherever possible, the narrative is to be illustrated with maps or sketches showing formations penetrated and location and assays of samples taken as well as advances in workings. In the case of diamond drilling or churn drilling, the location and inclination of holes is to be shown on a map; logs and assays also are to be submitted.

The Monthly Report of Operator should be prepared in an original and four copies all of which must be sent to the Executive Officer of the Region not later than the 15th of the month following.

Preparation of Form MF-104—Operator's Monthly Report and Voucher.—All the applicable spaces in Form MF-104 should be filled in by the Operator, and the Operator or his agent should sign the certification in the lower left corner of the form.

The items of costs are arranged in the order they appear in Article 6 (a) of Form MF-200 (Revised February 1952), however, this form is readily adaptable for use in reporting activities under other contract forms.

Under Item (1) delete words "Short Form" if the contract is a sub-contract under Form MF-200; and delete word "Independent" if the contract reported is on Form MF-200 (A). Also, report work paid for on a unit basis under contract Form MF-200 as though it were performed under an independent contract.

Under Item (2) include labor, supervision and technical services incurred for the exploratory operations. Do not include labor, supervision and technical services used for work performed under items (5) and (6).

Under Item (3) include the costs of material and supplies used in the project other than that used under items (5) and (6).

Under Item (4) appear the three types of operating equipment expenditures, that is, rental, purchase and depreciation. The expenditures made for renting equipment belonging to a third party will be reported under "Rental". The amount paid or duly obligated for payment for the purchase of equipment will be reported under "Purchase". The amount of expenditures due the Operator to reimburse him for depreciation of equipment owned will be reported under "Depreciation".

Item (5) comprises costs of labor, supervision, technical services, materials, etc., which are used in the initial rehabilitation and repair of existing buildings, installations, fixtures, and equipment. These costs, therefore, should not be reported under items (2) and (3).

Item (6) includes the labor, supervision, technical services, materials, etc., used in the installation or construction of new buildings, fixed improvements, etc., necessary for the project. These costs, therefore, should not be reported under items (2) and (3).

Item (7) covers miscellaneous types of expenditure such as payroll taxes, liability insurance, workmen's compensation insurance, repairs to equipment and sampling and analysis. Only that part of payroll taxes, liability insurance and workmen's compensation which are paid by the operator should be reported under item (7). The share paid by the employee as a payroll deduction is to be included under item (2) as labor costs.

Item (8) includes any unforeseen costs not included in the other seven categories.

The original of Form MF-104 when submitted for reimbursable expenses incurred under contract Form MF-200 must be supported by original documentation or by certified copies of purchase orders, payrolls or transcripts of payrolls, unless such documentation has been waived by the Regional Executive Officer. This certification may be stated thus, "Certified True Copy (or Transcript)", followed by appropriate signature. If the Executive Officer of the Region determines that a contract under Form MF-200 should have an "on-site" audit, that is, a Government auditor should make an audit of the Operator's books and records of account, the Operator need not support his monthly voucher with original or certified documents except in cases of equipment purchases whose individual costs exceed $50.00. In these cases the original or a certified copy of the purchase order or invoice should be attached to the Monthly Voucher. N. B.—Only the *original* of Form MF-104 is required to be documented. The four copies of Form MF-104 are not to be thus supported.

Form MF-104 submitted for reimbursement under fixed price contracts on Form MF-200 (A), however, are not required to be supported by documentation of any kind. The Operator will submit his claim under item (1) of Form MF-104 by deleting as stated above the word "Independent" and by showing the number of feet or other units immediately after the appropriate descriptive word, such as, drilling, bulldozing, crosscutting, drifting, etc., and giving the "Monthly Total" amount due. "Totals Previously Reported", and "Totals to Date" columns should also be filled in.

Form MF-104A
(April 1952)

Budget Bureau No. 42-R1151.2

FEB 23 1960
O.M.E.

UNITED STATES
DEPARTMENT OF THE INTERIOR
DEFENSE MINERALS EXPLORATION ADMINISTRATION
OPERATOR'S UNIT COST AND PROGRESS REPORT

Month of Jan. 1960 Docket No. DMEA 4659 Contract No. E-1108
Operator's Name Clayton Silver Mines Minerals Pb-Zn
Address Kellogg, Idaho

OPERATION	Unit	Costs This Month	Units This Month	Costs to Date	Units to Date	Unit Costs to Date	Authorized by Contract: Units	Authorized by Contract: Unit Costs
Drifting	ft.	4000.20	118.0	50,490.66	1489.4	33.90	2150	$33.90
Crosscutting								
Raising								
Shafts	ft.	- -	- -	44,700.00	300	$149.	300	$149.
Winzes								
Excavation Sta.	cu. ft.	- -	- -	1,860.00	3000	0.62	3000	0.62
Pocket	cu. ft.	- -	- -	1,860.00	3000	0.62	3000	0.62
Sump	cu. ft.	- -	- -	2,480.00	4000	0.62	4000	0.62
Stripping								
Trenching								
Test Pits								
Roads and Trails								
Total Distributed Costs		4000.20		101,390.66				Total Costs Authorized by Contract
Operating Equipment Purchased								
Initial Rehabilitation and Repairs								
New Buildings, Improvements, etc.								
Engineering		- -		5,750.00				5,750
Total Costs		4000.20		107,140.66				130,840

The undersigned company, and the official executing this certification on its behalf, hereby certify that the information contained in this report is correct and complete to the best of their knowledge and belief.

Date 2/5/60 Operator Clayton Silver Mines

Per [signature] Title General Manager

Remarks:

NOTE.—Title 18, U. S. Code (Crimes), section 1001, makes it a criminal offense to make a willfully false statement or representation to any department or agency of the United States as to any matter within its jurisdiction.

(Instructions on reverse)

(For Government use only)

/s/ Stephen W. Goldich
Mining Engr.
Feb. 10, 1960

INSTRUCTIONS

Preparation of Form MF-104A—Operator's Unit Cost and Progress Report.—Applicable places on Form 104A should be filled in by the Operator. The purpose of this form is twofold as follows: (1) to furnish the supervising engineers and other administrators with statistical information necessary to better determine the progress of the project; and (2) to furnish more permanent information on mining costs for future use. The more important phases of operation on which permanent information is desired have been outlined in the form. There are blank lines, however, for those unusual phases which may need to be reported for a particular project. It will be necessary for the Operator to distribute his costs among the applicable phases reported with the exception of three items the costs of which are not to be distributed by the Operator. These three items are: "Operating Equipment Purchased", "Initial Rehabilitation and Repairs", and "New Buildings, Improvements, etc." The reason for not distributing these items on a monthly basis is doubtless clear to the Operator, since such distribution might well overstate the cost for any one month or period short of the entire contract period.

Form MF-104A has been designed to tie in with Form MF-104 for both monthly and cumulative costs. The "Total Costs" on Form MF-104A for each month should equal the monthly "Total Costs" as reported on Form MF-104. This is also true of the "Total Costs To Date".

In preparing Form MF-104A, it will be necessary frequently to distribute certain costs over a number of items. For instance, supervisory and engineering costs may have to be distributed over several phases, such as, drifting, crosscutting, raising, etc., provided that these items were reported active for the month. Such distributions should be made on the basis of time spent on the various phases, on man days of labor charged to such phases, or on some other equitable basis. "Operating Equipment", "Initial Rehabilitation and Repairs", and "New Buildings Improvements, etc.", will be distributed to the several phases of the project by the Washington Office of DMEA at the close of the project if determined necessary. The last two columns headed "Authorized by Contract" will be filled in by the Operator if such information is found in the contract. This information is usually a part of Exhibit "A" of the contract. A space for remarks has been provided for the use of the Operator to call attention to any unusual circumstances causing excessive or disproportionate unit costs.

GPO 872894

CLAYTON SILVER MINES

February 5, 1960

Docket No. [illegible] 4059
Contract No. [illegible]-1100

[illegible] month of January, 1960

[illegible] 600 north, raise was advanced outward on line [illegible] feet to a point [illegible] feet north of station [illegible].

[illegible] water flow was encountered near [illegible] the loss of several [illegible] station [illegible] drilled [illegible].

[illegible] hundred seventy-seven (677) tons of ore were extracted from 700 level stope upon which royalty is due.

Submitted by:

Norman M. Smith

Form MF-104 (Rev.)
(April 1952)

Budget Bureau No. 42-R1036.3.
Approval expires 6-30-53.

UNITED STATES
DEPARTMENT OF THE INTERIOR
DEFENSE MINERALS EXPLORATION ADMINISTRATION
OPERATOR'S MONTHLY REPORT AND VOUCHER

JAN 22 1960 O.M.E.

Month of December, 1959 Docket No. DMEA 4659 Contract No. E-1108
Operator's Name Clayton Silver Mines Minerals Pb-Zn
Address Kellogg, Idaho
Contract Amount, $ 130,840. Government Participation: 50 % Amount, $ 65,420.

ITEMS OF COSTS	FOR OPERATOR'S USE: Monthly Total	Totals Previously Reported	Totals To Date	FOR GOVERNMENT USE ONLY: Approved Monthly Total	Approved Totals Previously Reported	Approved Totals To Date
(1) Independent Short Form Contracts:						
Drilling ~~xxxxx~~ Pocket	- -	1,860.00	1,860.00		1860.00	1860.00
Bulldozing ~~xxxxxx~~ Sump	- -	2,480.00	2,480.00		2480.00	2480.00
Crosscutting ~~xxxxxxxx~~ Sta.	- -	1,860.00	1,860.00		1860.00	1860.00
Drifting	5051.10	41,439.36	46,490.46	5051.10	41439.36	46490.46
Shaft	- -	44,700.00	44,700.00		44700.00	44700.00
(2) Labor and Supervision:						
Labor						
Supervision						
Technical Services	- -	5,750.00	5,750.00		5750.00	5750.00
(3) Operating Mat'ls. and Supplies:						
Timber						
Explosives						
Pipe						
Track						
(4) Operating Equipment:						
Rental						
Purchase						
Depreciation						
(5) Initial Rehabilitation and Repairs						
(6) New Bldgs., Improvements, etc.						
(7) Miscellaneous:						
Repairs to Equipment						
Sampling and Analysis						
Payroll Taxes						
Liability Insurance						
(8) Contingencies (specify):						
TOTALS	5051.10	98089.36	103140.46	5051.10	98089.36	103140.46

I certify that the above bill is correct and just and that payment therefor has not been received.

Date 1-8-60 *Payee Clayton Silver Mines

Per [signature] Title General Manager

*When a voucher is signed or receipted in the name of a company or corporation, the name of the person writing the company or corporate name, as well as the capacity in which he signs, must appear. For example: "John Doe Company, per John Smith, Secretary," or "Treasurer," as the case may be.

NOTE.—Title 18, U. S. Code (Crimes), section 1001, makes it a criminal offense to make a willfully false statement or representation to any department or agency of the United States as to any matter within its jurisdiction.

(Instructions on reverse)

Pursuant to authority vested in me, I certify that this account is correct and proper for payment in the amount of:

$ 2525.55

Signature Dorothy F. Long
(Authorized Certifying Officer)

Date 1/18/60 Vou. No. 2339

(See other side)

(For Government use only)

CERTIFICATION BY GOVERNMENT REPRESENTATIVE:

I certify that to the best of my knowledge and belief the contractor submitting this voucher is operating a Defense Minerals Exploration Administration project under Contract No. E 1108 in accordance with the terms of the contract.

Signature /s/ Stephen W. Zoldok Title Mining Engr. Date 1-12-60

APPROVAL BY ~~DMEA~~ DME EXECUTIVE OFFICER OR ALTERNATE:

Signature /s/ A. E. Weissenborn Title Exec. Officer Date Jan. 14, 1960

MONTHLY REPORT OF OPERATOR

The Operator (Contractor) of an exploration project is required to make a monthly report to the Government through the Regional Executive Officer. This report consists of three parts as follows:

(a) *Form MF-104—Operator's Monthly Report and Voucher.*—This form details expenditures and constitutes a voucher for reimbursing the Operator for the Government's share of costs;

(b) *Form MF-104A—Operator's Unit Cost and Progress Report.*—This is a statistical report of expenditures which shows costs for the various types of operation; and

(c) *Narrative.*—A concise narrative description of progress made, results accomplished, and any unusual difficulties encountered must be furnished as an attachment to this Report and Voucher. Wherever possible, the narrative is to be illustrated with maps or sketches showing formations penetrated and location and assays of samples taken as well as advances in workings. In the case of diamond drilling or churn drilling, the location and inclination of holes is to be shown on a map; logs and assays also are to be submitted.

The Monthly Report of Operator should be prepared in an original and four copies all of which must be sent to the Executive Officer of the Region not later than the 15th of the month following.

Preparation of Form MF-104—Operator's Monthly Report and Voucher.—All the applicable spaces in Form MF-104 should be filled in by the Operator, and the Operator or his agent should sign the certification in the lower left corner of the form.

The items of costs are arranged in the order they appear in Article 6 (a) of Form MF-200 (Revised February 1952), however, this form is readily adaptable for use in reporting activities under other contract forms.

Under Item (1) delete words "Short Form" if the contract is a sub-contract under Form MF-200; and delete word "Independent" if the contract reported is on Form MF-200 (A). Also, report work paid for on a unit basis under contract Form MF-200 as though it were performed under an independent contract.

Under Item (2) include labor, supervision and technical services incurred for the exploratory operations. Do not include labor, supervision and technical services used for work performed under items (5) and (6).

Under Item (3) include the costs of material and supplies used in the project other than that used under items (5) and (6).

Under Item (4) appear the three types of operating equipment expenditures, that is, rental, purchase and depreciation. The expenditures made for renting equipment belonging to a third party will be reported under "Rental". The amount paid or duly obligated for payment for the purchase of equipment will be reported under "Purchase". The amount of expenditures due the Operator to reimburse him for depreciation of equipment owned will be reported under "Depreciation".

Item (5) comprises costs of labor, supervision, technical services, materials, etc., which are used in the initial rehabilitation and repair of existing buildings, installations, fixtures, and equipment. These costs, therefore, should not be reported under items (2) and (3).

Item (6) includes the labor, supervision, technical services, materials, etc., used in the installation or construction of new buildings, fixed improvements, etc., necessary for the project. These costs, therefore, should not be reported under items (2) and (3).

Item (7) covers miscellaneous types of expenditure such as payroll taxes, liability insurance, workmen's compensation insurance, repairs to equipment and sampling and analysis. Only that part of payroll taxes, liability insurance and workmen's compensation which are paid by the operator should be reported under item (7). The share paid by the employee as a payroll deduction is to be included under item (2) as labor costs.

Item (8) includes any unforeseen costs not included in the other seven categories.

The original of Form MF-104 when submitted for reimbursable expenses incurred under contract Form MF-200 must be supported by original documentation or by certified copies of purchase orders, payrolls or transcripts of payrolls, unless such documentation has been waived by the Regional Executive Officer. This certification may be stated thus, "Certified True Copy (or Transcript)", followed by appropriate signature. If the Executive Officer of the Region determines that a contract under Form MF-200 should have an "on-site" audit, that is, a Government auditor should make an audit of the Operator's books and records of account, the Operator need not support his monthly voucher with original or certified documents except in cases of equipment purchases whose individual costs exceed $50.00. In these cases the original or a certified copy of the purchase order or invoice should be attached to the Monthly Voucher. N. B.—Only the *original* of Form MF-104 is required to be documented. The four copies of Form MF-104 are not to be thus supported.

Form MF-104 submitted for reimbursement under fixed price contracts on Form MF-200 (A), however, are not required to be supported by documentation of any kind. The Operator will submit his claim under item (1) of Form MF-104 by deleting as stated above the word "Independent" and by showing the number of feet or other units immediately after the appropriate descriptive word, such as, drilling, bulldozing, crosscutting, drifting, etc., and giving the "Monthly Total" amount due. "Totals Previously Reported", and "Totals to Date" columns should also be filled in.

GPO 83-38476

Form MF-104A
(April 1952)

Budget Bureau No. 42-R1151
Approval expires 6-30-53.

JAN 22 1960
O.M.E.

UNITED STATES
DEPARTMENT OF THE INTERIOR
DEFENSE MINERALS EXPLORATION ADMINISTRATION
OPERATOR'S UNIT COST AND PROGRESS REPORT

Month of Dec 1959 Docket No. DMEA 4659 Contract No. E-1108
Operator's Name Clayton Silver Mines Minerals Pb-Zn
Address Kellogg, Idaho

OPERATION	UNIT	COSTS THIS MONTH	UNITS THIS MONTH	COSTS TO DATE	UNITS TO DATE	UNIT COSTS TO DATE	AUTHORIZED BY CONTRACT Units	AUTHORIZED BY CONTRACT Unit Costs
Drifting	ft.	5051.10	149.0	46490.46	1370.4	33.90	2150	$33.90
Crosscutting								
Raising								
Shafts	ft.	- -	- -	44,700.00	300	$149.00	300	$149.
Winzes								
Excavation ~~Drifting~~ ~~Core~~ Sta.	cu. ft.	- -	- -	1,860.00	3000	0.62	3000	0.62
~~Chute~~ Pocket	cu. ft.	- -	- -	1,860.00	3000	0.62	3000	0.62
~~Auger~~ Sump	cu. ft.	- -	- -	2,480.00	4000	0.62	4000	0.62
Stripping								
Trenching								
Test Pits								
Roads and Trails								
TOTAL DISTRIBUTED COSTS		5051.10		97390.46				TOTAL COSTS AUTHORIZED BY CONTRACT
Operating Equipment Purchased								
Initial Rehabilitation and Repairs								
New Buildings, Improvements, etc.								
Engineering		- -		5,750.00				5,750
TOTAL COSTS		5051.10		103,140.46				130,840

The undersigned company, and the official executing this certification on its behalf, hereby certify that the information contained in this report is correct and complete to the best of their knowledge and belief.

Date 1-8-60 Operator Clayton Silver Mines

Per M. M. Smith Title General Manager

NOTE.—Title 18, U. S. Code (Crimes), section 1001, makes it a criminal offense to make a willfully false statement or representation to any department or agency of the United States as to any matter within its jurisdiction.

(Instructions on reverse)

REMARKS:

(For Government use only)

Jan. 13, 1960
/s/ Stephen W. Zoldok
Mining Eng.

INSTRUCTIONS

Preparation of Form MF-104A—Operator's Unit Cost and Progress Report.—Applicable places on Form 104A should be filled in by the Operator. The purpose of this form is twofold as follows: (1) to furnish the supervising engineers and other administrators with statistical information necessary to better determine the progress of the project; and (2) to furnish more permanent information on mining costs for future use. The more important phases of operation on which permanent information is desired have been outlined in the form. There are blank lines, however, for those unusual phases which may need to be reported for a particular project. It will be necessary for the Operator to distribute his costs among the applicable phases reported with the exception of three items the costs of which are not to be distributed by the Operator. These three items are: "Operating Equipment Purchased", "Initial Rehabilitation and Repairs", and "New Buildings, Improvements, etc." The reason for not distributing these items on a monthly basis is doubtless clear to the Operator, since such distribution might well overstate the cost for any one month or period short of the entire contract period.

Form MF-104A has been designed to tie in with Form MF-104 for both monthly and cumulative costs. The "Total Costs" on Form MF-104A for each month should equal the monthly "Total Costs" as reported on Form MF-104. This is also true of the "Total Costs To Date".

In preparing Form MF-104A, it will be necessary frequently to distribute certain costs over a number of items. For instance, supervisory and engineering costs may have to be distributed over several phases, such as, drifting, crosscutting, raising, etc., provided that these items were reported active for the month. Such distributions should be made on the basis of time spent on the various phases, on man days of labor charged to such phases, or on some other equitable basis. "Operating Equipment", "Initial Rehabilitation and Repairs", and "New Buildings Improvements, etc.", will be distributed to the several phases of the project by the Washington Office of DMEA at the close of the project if determined necessary. The last two columns headed "Authorized by Contract" will be filled in by the Operator if such information is found in the contract. This information is usually a part of Exhibit "A" of the contract. A space for remarks has been provided for the use of the Operator to call attention to any unusual circumstances causing excessive or disproportionate unit costs.

GPO 83-38475

CLAYTON SILVER MINES

Docket No. DMEA 4659
Contract No. Idm-E-1108

NARRATIVE

Month of December, 1959

The 800 North Drift was advanced northward on line 149.0 feet to a point 277.0 feet north of Station 809.

There were no particular changes in rock formations during this advance, and very little additional water was made.

Three hundred sixty-nine (369) tons of ore were extracted from the 700 level stope upon which royalty is due.

On the matter of royalties due since the month of July, 1959, the smelter ended its strike about December 15, 1959. However, the concentrates accumulated during the strike will be settled for over a three-month period of December 15, 1959 and March 15, 1960.

Settlements and income will not be known until after March 15, 1960 and after that time royalties can be calculated.

Submitted by:

Norman M. Smith

NORMAN M. SMITH

Form MF-104 (Rev.)
(April 1952)

Budget Bureau No. 42-R1036.3.
Approval expires 6-30-53.

UNITED STATES
DEPARTMENT OF THE INTERIOR
DEFENSE MINERALS EXPLORATION ADMINISTRATION
OPERATOR'S MONTHLY REPORT AND VOUCHER

Month of November, 1959 Docket No. DMEA 4659 Contract No. E-1108
Operator's Name Clayton Silver Mines Minerals Pb-Zn
Address Kellogg, Idaho
Contract Amount, $ 130,840. Government Participation: 50 % Amount, $ 65,420.

ITEMS OF COSTS	FOR OPERATOR'S USE			FOR GOVERNMENT USE ONLY		
	Monthly Total	Totals Previously Reported	Totals To Date	Approved Monthly Total	Approved Totals Previously Reported	Approved Totals To Date
(1) Independent Short Form Contracts:						
~~Drifting~~ Pocket	- -	1,860.00	1,860.00		1860.00	1860.00
~~Drifting~~ Sump	- -	2,480.00	2,480.00		2480.00	2480.00
~~Crosscutting~~ Sta.	- -	1,860.00	1,860.00		1860.00	1860.00
Drifting	4834.14	36605.22	41439.36	4834.14	36605.22	41439.36
Shaft	- -	44,700.00	44,700.00		44700.00	44700.00
(2) Labor and Supervision:						
Labor						
Supervision						
Technical Services	- -	5,750.00	5,750.00		5750.00	5750.00
(3) Operating Mat'ls. and Supplies:						
Timber						
Explosives						
Pipe						
Track						
(4) Operating Equipment:						
Rental						
Purchase						
Depreciation						
(5) Initial Rehabilitation and Repairs						
(6) New Bldgs., Improvements, etc.						
(7) Miscellaneous:						
Repairs to Equipment						
Sampling and Analysis						
Payroll Taxes						
Liability Insurance						
(8) Contingencies (specify):						
TOTALS	4834.14	93256.22	98089.36	4834.14	93255.22	98089.36

I certify that the above bill is correct and just and that payment therefor has not been received.

Date 12/8/59 *Payee Clayton Silver Mines

Per [signature] Title General Manager

*When a voucher is signed or receipted in the name of a company or corporation, the name of the person writing the company or corporate name, as well as the capacity in which he signs, must appear. For example: "John Doe Company, per John Smith, Secretary," or "Treasurer," as the case may be.

NOTE.—Title 18, U. S. Code (Crimes), section 1001, makes it a criminal offense to make a willfully false statement or representation to any department or agency of the United States as to any matter within its jurisdiction.

(Instructions on reverse)

Pursuant to authority vested in me, I certify that this account is correct and proper for payment in the amount of:

$ 2417.07

Signature [signature]
(Authorized Certifying Officer)

Date 12/17/59 Vou. No. 2337

(See other side)

(For Government use only)

CERTIFICATION BY GOVERNMENT REPRESENTATIVE:

I certify that to the best of my knowledge and belief the contractor submitting this voucher is operating a Defense Minerals Exploration Administration project under Contract No. E1108 in accordance with the terms of the contract.

Signature /s/ Stephen W. Goldoh Title Mining Engr. Date 12-14-59

APPROVAL BY ~~DMEA~~ OME EXECUTIVE OFFICER OR ALTERNATE:

Signature /s/ A. E. Weissenborn Title Exec. Officer Date Dec. 15, 1959

MONTHLY REPORT OF OPERATOR

The Operator (Contractor) of an exploration project is required to make a monthly report to the Government through the Regional Executive Officer. This report consists of three parts as follows:

(a) *Form MF-104—Operator's Monthly Report and Voucher.*—This form details expenditures and constitutes a voucher for reimbursing the Operator for the Government's share of costs;

(b) *Form MF-104A—Operator's Unit Cost and Progress Report.*—This is a statistical report of expenditures which shows costs for the various types of operation; and

(c) *Narrative.*—A concise narrative description of progress made, results accomplished, and any unusual difficulties encountered must be furnished as an attachment to this Report and Voucher. Wherever possible, the narrative is to be illustrated with maps or sketches showing formations penetrated and location and assays of samples taken as well as advances in workings. In the case of diamond drilling or churn drilling, the location and inclination of holes is to be shown on a map; logs and assays also are to be submitted.

The Monthly Report of Operator should be prepared in an original and four copies all of which must be sent to the Executive Officer of the Region not later than the 15th of the month following.

Preparation of Form MF-104—Operator's Monthly Report and Voucher.—All the applicable spaces in Form MF-104 should be filled in by the Operator, and the Operator or his agent should sign the certification in the lower left corner of the form.

The items of costs are arranged in the order they appear in Article 6 (a) of Form MF-200 (Revised February 1952), however, this form is readily adaptable for use in reporting activities under other contract forms.

Under Item (1) delete words "Short Form" if the contract is a sub-contract under Form MF-200; and delete word "Independent" if the contract reported is on Form MF-200 (A). Also, report work paid for on a unit basis under contract Form MF-200 as though it were performed under an independent contract.

Under Item (2) include labor, supervision and technical services incurred for the exploratory operations. Do not include labor, supervision and technical services used for work performed under items (5) and (6).

Under Item (3) include the costs of material and supplies used in the project other than that used under items (5) and (6).

Under Item (4) appear the three types of operating equipment expenditures, that is, rental, purchase and depreciation. The expenditures made for renting equipment belonging to a third party will be reported under "Rental". The amount paid or duly obligated for payment for the purchase of equipment will be reported under "Purchase". The amount of expenditures due the Operator to reimburse him for depreciation of equipment owned will be reported under "Depreciation".

Item (5) comprises costs of labor, supervision, technical services, materials, etc., which are used in the initial rehabilitation and repair of existing buildings, installations, fixtures, and equipment. These costs, therefore, should not be reported under items (2) and (3).

Item (6) includes the labor, supervision, technical services, materials, etc., used in the installation or construction of new buildings, fixed improvements, etc., necessary for the project. These costs, therefore, should not be reported under items (2) and (3).

Item (7) covers miscellaneous types of expenditure such as payroll taxes, liability insurance, workmen's compensation insurance, repairs to equipment and sampling and analysis. Only that part of payroll taxes, liability insurance and workmen's compensation which are paid by the operator should be reported under item (7). The share paid by the employee as a payroll deduction is to be included under item (2) as labor costs.

Item (8) includes any unforeseen costs not included in the other seven categories.

The original of Form MF-104 when submitted for reimbursable expenses incurred under contract Form MF-200 must be supported by original documentation or by certified copies of purchase orders, payrolls or transcripts of payrolls, unless such documentation has been waived by the Regional Executive Officer. This certification may be stated thus, "Certified True Copy (or Transcript)", followed by appropriate signature. If the Executive Officer of the Region determines that a contract under Form MF-200 should have an "on-site" audit, that is, a Government auditor should make an audit of the Operator's books and records of account, the Operator need not support his monthly voucher with original or certified documents except in cases of equipment purchases whose individual costs exceed $50.00. In these cases the original or a certified copy of the purchase order or invoice should be attached to the Monthly Voucher. N. B.—Only the *original* of Form MF-104 is required to be documented. The four copies of Form MF-104 are not to be thus supported.

Form MF-104 submitted for reimbursement under fixed price contracts on Form MF-200 (A), however, are not required to be supported by documentation of any kind. The Operator will submit his claim under item (1) of Form MF-104 by deleting as stated above the word "Independent" and by showing the number of feet or other units immediately after the appropriate descriptive word, such as, drilling, bulldozing, crosscutting, drifting, etc., and giving the "Monthly Total" amount due. "Totals Previously Reported", and "Totals to Date" columns should also be filled in.

GPO 83-38476

Form MF-104A
(April 1952)

Budget Bureau No. 42-R1151.2

DEC 22 1959 O.M.E.

UNITED STATES
DEPARTMENT OF THE INTERIOR
DEFENSE MINERALS EXPLORATION ADMINISTRATION
OPERATOR'S UNIT COST AND PROGRESS REPORT

Month of Nov. 1959 Docket No. DMEA 4659 Contract No. E-1108
Operator's Name Clayton Silver Mines Minerals Pb-Zn
Address Kellogg, Idaho

OPERATION	UNIT	COSTS THIS MONTH	UNITS THIS MONTH	COSTS TO DATE	UNITS TO DATE	UNIT COSTS TO DATE	AUTHORIZED BY CONTRACT Units	AUTHORIZED BY CONTRACT Unit Costs
Drifting	ft.	4834.14	142.6	41,439.36	1222.4	33.90	2150	$33.90
Crosscutting								
Raising								
Shafts	ft.	- -	- -	44,700.00	300	$149.	300	$149.
Winzes								
~~Drilling: Core~~ Excavation Sta.	cu. ft.	- -	- -	1,860.00	3000	0.62	3000	0.62
~~Churn~~ Pocket	cu. ft.	- -	- -	1,860.00	3000	0.62	3000	0.62
~~Auger~~ Sump	cu. ft.	- -	- -	2,480.00	4000	0.62	4000	0.62
Stripping								
Trenching								
Test Pits								
Roads and Trails								
TOTAL DISTRIBUTED COSTS		4834.14		92,339.36				TOTAL COSTS AUTHORIZED BY CONTRACT
Operating Equipment Purchased								
Initial Rehabilitation and Repairs								
New Buildings, Improvements, etc.								
Engineering		- -		5,750.00				5,750
TOTAL COSTS		4834.14		98,089.36				130,840

The undersigned company, and the official executing this certification on its behalf, hereby certify that the information contained in this report is correct and complete to the best of their knowledge and belief.

Date 12/8/59 Operator Clayton Silver Mines

Per [signature] Title General Manager

NOTE.—Title 18, U. S. Code (Crimes), section 1001, makes it a criminal offense to make a willfully false statement or representation to any department or agency of the United States as to any matter within its jurisdiction.

REMARKS:

(Instructions on reverse)

(For Government use only)

12-14-59
/s/ Stephen W. Goldock, Mining Engr.

INSTRUCTIONS

Preparation of Form MF-104A—Operator's Unit Cost and Progress Report.—Applicable places on Form 104A should be filled in by the Operator. The purpose of this form is twofold as follows: (1) to furnish the supervising engineers and other administrators with statistical information necessary to better determine the progress of the project; and (2) to furnish more permanent information on mining costs for future use. The more important phases of operation on which permanent information is desired have been outlined in the form. There are blank lines, however, for those unusual phases which may need to be reported for a particular project. It will be necessary for the Operator to distribute his costs among the applicable phases reported with the exception of three items the costs of which are not to be distributed by the Operator. These three items are: "Operating Equipment Purchased", "Initial Rehabilitation and Repairs", and "New Buildings, Improvements, etc." The reason for not distributing these items on a monthly basis is doubtless clear to the Operator, since such distribution might well overstate the cost for any one month or period short of the entire contract period.

Form MF-104A has been designed to tie in with Form MF-104 for both monthly and cumulative costs. The "Total Costs" on Form MF-104A for each month should equal the monthly "Total Costs" as reported on Form MF-104. This is also true of the "Total Costs To Date".

In preparing Form MF-104A, it will be necessary frequently to distribute certain costs over a number of items. For instance, supervisory and engineering costs may have to be distributed over several phases, such as, drifting, crosscutting, raising, etc., provided that these items were reported active for the month. Such distributions should be made on the basis of time spent on the various phases, on man days of labor charged to such phases, or on some other equitable basis. "Operating Equipment", "Initial Rehabilitation and Repairs", and "New Buildings Improvements, etc.", will be distributed to the several phases of the project by the Washington Office of DMEA at the close of the project if determined necessary. The last two columns headed "Authorized by Contract" will be filled in by the Operator if such information is found in the contract. This information is usually a part of Exhibit "A" of the contract. A space for remarks has been provided for the use of the Operator to call attention to any unusual circumstances causing excessive or disproportionate unit costs.

GPO 872894

CLAYTON SILVER MINES

Docket No. D LA 4659
Contract No. Ion- -1130

[illegible]

Month of November, 1959

The 800 North Drift was advanced northward on line 96.6 feet to a point 128.0 feet north of Station 809.

A westward crosscut was established near Station 809 for switch and siding.

This was advanced northwestward a distance of 46.0 feet.

One hundred eighty-three (183) tons of ore were recovered from stope preparations on 700 level. No settlements from concentrate recovery yet received because of strike at smelter.

Submitted by:

[illegible]

[illegible]

COPY

Form MF-104 (Rev.)
(April 1952)

Budget Bureau No. 42-R1036.5

UNITED STATES
DEPARTMENT OF THE INTERIOR
DEFENSE MINERALS EXPLORATION ADMINISTRATION
OPERATOR'S MONTHLY REPORT AND VOUCHER

NOV 23 1959
C.M.E.

Month of October, 1959 Docket No. DMEA 4659 C Contract No. E-1108
Operator's Name Clayton Silver Mines Minerals Pb-Zn
Address Kellogg, Idaho
Contract Amount, $ 130,840. Government Participation: 50% Amount, $ 65,420.

ITEMS OF COSTS	FOR OPERATOR'S USE			FOR GOVERNMENT USE ONLY		
	Monthly Total	Totals Previously Reported	Totals To Date	Approved Monthly Total	Approved Totals Previously Reported	Approved Totals To Date
(1) Independent Short Form Contracts:						
~~Drilling~~ Pocket	---	1,860.00	1,860.00		1860.00	1860.00
~~Blocking~~ Sump	---	2,480.00	2,480.00		2480.00	2480.00
~~Crosscutting~~ Sta.	---	1,860.00	1,860.00		1860.00	1860.00
Drifting	5522.31	31 082.91	36 605.22	5522.31	31082.91	36605.22
Shaft	---	44,700.00	44,700.00		44700.00	44700.00
(2) Labor and Supervision:						
Labor						
Supervision						
Technical Services	~~250.00~~	5750.00	5750.00		5750.00	5750.00
(3) Operating Mat'ls. and Supplies:						
Timber						
Explosives						
Pipe						
Track						
(4) Operating Equipment:						
Rental						
Purchase						
Depreciation						
(5) Initial Rehabilitation and Repairs						
(6) New Bldgs., Improvements, etc.						
(7) Miscellaneous:						
Repairs to Equipment						
Sampling and Analysis						
Payroll Taxes						
Liability Insurance						
(8) Contingencies (specify):						
TOTALS	5522.31	87,732.91	93,255.22	5522.31	87732.91	93255.22

I certify that the above bill is correct and just and that payment therefor has not been received.

Date 11/3/59 *Payee Clayton Silver Mines

Per [signature] Title General Manager

*When a voucher is signed or receipted in the name of a company or corporation, the name of the person writing the company or corporate name, as well as the capacity in which he signs, must appear. For example: "John Doe Company, per John Smith, Secretary," or "Treasurer," as the case may be.

→ NOTE.—Title 18, U. S. Code (Crimes), section 1001, makes it a criminal offense to make a willfully false statement or representation to any department or agency of the United States as to any matter within its jurisdiction.

(Instructions on reverse)

Pursuant to authority vested in me, I certify that this account is correct and proper for payment in the amount of:

$ 2761.15

Signature [signature]
(Authorized Certifying Officer)

Date 11/13/59 Vou. No. 2332
(See other side)

(For Government use only)

CERTIFICATION BY GOVERNMENT REPRESENTATIVE:

I certify that to the best of my knowledge and belief the contractor submitting this voucher is operating a Defense Minerals Exploration Administration project under Contract No. E1108 in accordance with the terms of the contract.

Signature /S/ Stephen W. Foldoh Title Mining Engr. Date 11-6-59

APPROVAL BY ~~DMEA~~ CMEA EXECUTIVE OFFICER OR ALTERNATE:

Signature /S/ Wesley G. Agnew Title Acting Exec. Date 11-10-59

MONTHLY REPORT OF OPERATOR

The Operator (Contractor) of an exploration project is required to make a monthly report to the Government through the Regional Executive Officer. This report consists of three parts as follows:

(a) *Form MF-104—Operator's Monthly Report and Voucher.*—This form details expenditures and constitutes a voucher for reimbursing the Operator for the Government's share of costs;

(b) *Form MF-104A—Operator's Unit Cost and Progress Report.*—This is a statistical report of expenditures which shows costs for the various types of operation; and

(c) *Narrative.*—A concise narrative description of progress made, results accomplished, and any unusual difficulties encountered must be furnished as an attachment to this Report and Voucher. Wherever possible, the narrative is to be illustrated with maps or sketches showing formations penetrated and location and assays of samples taken as well as advances in workings. In the case of diamond drilling or churn drilling, the location and inclination of holes is to be shown on a map; logs and assays also are to be submitted.

The Monthly Report of Operator should be prepared in an original and four copies all of which must be sent to the Executive Officer of the Region not later than the 15th of the month following.

Preparation of Form MF-104—Operator's Monthly Report and Voucher.—All the applicable spaces in Form MF-104 should be filled in by the Operator, and the Operator or his agent should sign the certification in the lower left corner of the form.

The items of costs are arranged in the order they appear in Article 6 (a) of Form MF-200 (Revised February 1952), however, this form is readily adaptable for use in reporting activities under other contract forms.

Under Item (1) delete words "Short Form" if the contract is a sub-contract under Form MF-200; and delete word "Independent" if the contract reported is on Form MF-200 (A). Also, report work paid for on a unit basis under contract Form MF-200 as though it were performed under an independent contract.

Under Item (2) include labor, supervision and technical services incurred for the exploratory operations. Do not include labor, supervision and technical services used for work performed under items (5) and (6).

Under Item (3) include the costs of material and supplies used in the project other than that used under items (5) and (6).

Under Item (4) appear the three types of operating equipment expenditures, that is, rental, purchase and depreciation. The expenditures made for renting equipment belonging to a third party will be reported under "Rental". The amount paid or duly obligated for payment for the purchase of equipment will be reported under "Purchase". The amount of expenditures due the Operator to reimburse him for depreciation of equipment owned will be reported under "Depreciation".

Item (5) comprises costs of labor, supervision, technical services, materials, etc., which are used in the initial rehabilitation and repair of existing buildings, installations, fixtures, and equipment. These costs, therefore, should not be reported under items (2) and (3).

Item (6) includes the labor, supervision, technical services, materials, etc., used in the installation or construction of new buildings, fixed improvements, etc., necessary for the project. These costs, therefore, should not be reported under items (2) and (3).

Item (7) covers miscellaneous types of expenditure such as payroll taxes, liability insurance, workmen's compensation insurance, repairs to equipment and sampling and analysis. Only that part of payroll taxes, liability insurance and workmen's compensation which are paid by the operator should be reported under item (7). The share paid by the employee as a payroll deduction is to be included under item (2) as labor costs.

Item (8) includes any unforeseen costs not included in the other seven categories.

The original of Form MF-104 when submitted for reimbursable expenses incurred under contract Form MF-200 must be supported by original documentation or by certified copies of purchase orders, payrolls or transcripts of payrolls, unless such documentation has been waived by the Regional Executive Officer. This certification may be stated thus, "Certified True Copy (or Transcript)", followed by appropriate signature. If the Executive Officer of the Region determines that a contract under Form MF-200 should have an "on-site" audit, that is, a Government auditor should make an audit of the Operator's books and records of account, the Operator need not support his monthly voucher with original or certified documents except in cases of equipment purchases whose individual costs exceed $50.00. In these cases the original or a certified copy of the purchase order or invoice should be attached to the Monthly Voucher. N. B.—Only the *original* of Form MF-104 is required to be documented. The four copies of Form MF-104 are not to be thus supported.

Form MF-104 submitted for reimbursement under fixed price contracts on Form MF-200 (A), however, are not required to be supported by documentation of any kind. The Operator will submit his claim under item (1) of Form MF-104 by deleting as stated above the word "Independent" and by showing the number of feet or other units immediately after the appropriate descriptive word, such as, drilling, bulldozing, crosscutting, drifting, etc., and giving the "Monthly Total" amount due. "Totals Previously Reported", and "Totals to Date" columns should also be filled in.

Form MF-104A
(April 1952)

Budget Bureau No. 42-R1151.2

UNITED STATES
DEPARTMENT OF THE INTERIOR

DEFENSE MINERALS EXPLORATION ADMINISTRATION

OPERATOR'S UNIT COST AND PROGRESS REPORT

Month of Oct 1959 Docket No. DMEA 4659 Contract No. E-1108

Operator's Name Clayton Silver Mines Minerals Pb-Zn

Address Kellogg, Idaho

OPERATION	Unit	Costs This Month	Units This Month	Costs to Date	Units to Date	Unit Costs to Date	Authorized by Contract: Units	Authorized by Contract: Unit Costs
Drifting	ft.	5522.31	162.9	36,605.22	1079.8	33.90	2150	33.90
Crosscutting								
Raising								
Shafts	ft.	---	---	44,700.00	300	149.	300	149.
Winzes								
Excavation ~~Drilling Code~~ Sta.	cu. ft.	---	---	1,860.00	3000	0.62	3000	0.62
~~xxxx~~ Pocket	cu. ft.	---	---	1,860.00	3000	0.62	3000	0.62
~~xxxx~~ Sump	cu. ft.	---	---	2,480.00	4000	0.62	4000	0.62
Stripping								
Trenching								
Test Pits								
Roads and Trails								
Total Distributed Costs		5522.31		87,505.22				Total Costs Authorized by Contract
Operating Equipment Purchased								
Initial Rehabilitation and Repairs								
New Buildings, Improvements, etc.								
Engineering				5750.00				5,750.
Total Costs		5522.31		93,255.22				130,840.

The undersigned company, and the official executing this certification on its behalf, hereby certify that the information contained in this report is correct and complete to the best of their knowledge and belief.

Date 11/3/59 Operator Clayton Silver Mines

Per [signature] Title General Manager

Remarks:

NOTE.—Title 18, U. S. Code (Crimes), section 1001, makes it a criminal offense to make a willfully false statement or representation to any department or agency of the United States as to any matter within its jurisdiction.

(Instructions on reverse)

(For Government use only)

/s/ Stephen W. Zoldok
Mining Eng.

NOV 23 1959
O.M.E.

INSTRUCTIONS

Preparation of Form MF-104A—Operator's Unit Cost and Progress Report.—Applicable places on Form 104A should be filled in by the Operator. The purpose of this form is twofold as follows: (1) to furnish the supervising engineers and other administrators with statistical information necessary to better determine the progress of the project; and (2) to furnish more permanent information on mining costs for future use. The more important phases of operation on which permanent information is desired have been outlined in the form. There are blank lines, however, for those unusual phases which may need to be reported for a particular project. It will be necessary for the Operator to distribute his costs among the applicable phases reported with the exception of three items the costs of which are not to be distributed by the Operator. These three items are: "Operating Equipment Purchased", "Initial Rehabilitation and Repairs", and "New Buildings, Improvements, etc." The reason for not distributing these items on a monthly basis is doubtless clear to the Operator, since such distribution might well overstate the cost for any one month or period short of the entire contract period.

Form MF-104A has been designed to tie in with Form MF-104 for both monthly and cumulative costs. The "Total Costs" on Form MF-104A for each month should equal the monthly "Total Costs" as reported on Form MF-104. This is also true of the "Total Costs To Date".

In preparing Form MF-104A, it will be necessary frequently to distribute certain costs over a number of items. For instance, supervisory and engineering costs may have to be distributed over several phases, such as, drifting, crosscutting, raising, etc., provided that these items were reported active for the month. Such distributions should be made on the basis of time spent on the various phases, on man days of labor charged to such phases, or on some other equitable basis. "Operating Equipment", "Initial Rehabilitation and Repairs", and "New Buildings Improvements, etc.", will be distributed to the several phases of the project by the Washington Office of DMEA at the close of the project if determined necessary. The last two columns headed "Authorized by Contract" will be filled in by the Operator if such information is found in the contract. This information is usually a part of Exhibit "A" of the contract. A space for remarks has been provided for the use of the Operator to call attention to any unusual circumstances causing excessive or disproportionate unit costs.

GPO 872894

CLAYTON SILVER MINES

Docket No. DMEA 4659
Contract No. Idm - E - 1108

NARRATIVE

Month of October, 1959

The 800 North Drift was advanced northward on line 162.9 feet to a point 413.9 feet north of Station 807. This point is also 31.4 feet north of the newly established Station 809, which is located 382.5 feet northerly from Station 807.

The drift passed through some galena and sphalerite mineralization from a point 10 feet north of Station 809 to the face on November 1, 1959.

Sixty tons of ore were recovered from this area in October. This 60 tons of ore constitutes the total ore recovered from below 500 level on which royalty is due.

The strike is still effective at the smelter and all concentrates are stored as inventory. Royalty will be calculated after smelting of lead concentrate inventory.

Submitted by:

Norman M. Smith

NORMAN M. SMITH

Form MF-104 (Rev.)
(April 1952)

Budget Bureau No. 42-R1036.5

UNITED STATES
DEPARTMENT OF THE INTERIOR
DEFENSE MINERALS EXPLORATION ADMINISTRATION

OCT 26 1959 O.M.E.

OPERATOR'S MONTHLY REPORT AND VOUCHER

Month of Sept, 1959 Docket No. DMEA 4659 Contract No. E-1108
Operator's Name Clayton Silver Mines Minerals Pb-Zn
Address Kellogg, Idaho
Contract Amount, $ 130,840. Government Participation: 50 % Amount, $ 65,420.

ITEMS OF COSTS	FOR OPERATOR'S USE			FOR GOVERNMENT USE ONLY		
	Monthly Total	Totals Previously Reported	Totals To Date	Approved Monthly Total	Approved Totals Previously Reported	Approved Totals To Date
(1) Independent Short Form Contracts:						
~~Drifting~~ Pocket	---	1,860.00	1,860.00		1860.00	1860.00
~~Bulkhead~~ Sump	---	2,480.00	2,480.00		2480.00	2480.00
~~Cleaning~~ Sta.	---	1,860.00	1,860.00		1860.00	1860.00
Drifting	4244.28	26,838.63	31,082.91	4244.28	26,838.63	31,082.91
Shaft	---	44,700.00	44,700.00		44700.00	44700.00
(2) Labor and Supervision:						
Labor						
Supervision						
Technical Services	~~250.00~~	5750.00	5750.00		5750.00	5750.00
(3) Operating Mat'ls. and Supplies:						
Timber						
Explosives						
Pipe						
Track						
(4) Operating Equipment:						
Rental						
Purchase						
Depreciation						
(5) Initial Rehabilitation and Repairs						
(6) New Bldgs., Improvements, etc.						
(7) Miscellaneous:						
Repairs to Equipment						
Sampling and Analysis						
Payroll Taxes						
Liability Insurance						
(8) Contingencies (specify):						
TOTALS	4244.28	83488.63	87732.91	4244.28	83488.63	87732.91

I certify that the above bill is correct and just and that payment therefor has not been received.

Date 10/12/59 *Payee Clayton Silver Mines

Per [signature] Title General Manager

*When a voucher is signed or receipted in the name of a company or corporation, the name of the person writing the company or corporate name, as well as the capacity in which he signs, must appear. For example: "John Doe Company, per John Smith, Secretary," or "Treasurer," as the case may be.

NOTE.—Title 18, U. S. Code (Crimes), section 1001, makes it a criminal offense to make a willfully false statement or representation to any department or agency of the United States as to any matter within its jurisdiction.

(Instructions on reverse)

Pursuant to authority vested in me, I certify that this account is correct and proper for payment in the amount of:

$ 2122.14

Signature Dorothy F. Fong
(Authorized Certifying Officer)

Date 10/27/59 Vou. No. 2328

(See other side)

(For Government use only)

CERTIFICATION BY GOVERNMENT REPRESENTATIVE:

I certify that to the best of my knowledge and belief the contractor submitting this voucher is operating a Defense Minerals Exploration Administration project under Contract No. 61108 in accordance with the terms of the contract.

Signature /S/ Stephen W. Goldock Title Mining Engr. Date 10-19-59

APPROVAL BY ~~DMEA~~ ONE EXECUTIVE OFFICER OR ALTERNATE:

Signature /S/ A. E. Weissenborn Title Exec. Officer Date Oct. 21, 1959

MONTHLY REPORT OF OPERATOR

The Operator (Contractor) of an exploration project is required to make a monthly report to the Government through the Regional Executive Officer. This report consists of three parts as follows:

(a) *Form MF-104—Operator's Monthly Report and Voucher.*—This form details expenditures and constitutes a voucher for reimbursing the Operator for the Government's share of costs;

(b) *Form MF-104A—Operator's Unit Cost and Progress Report.*—This is a statistical report of expenditures which shows costs for the various types of operation; and

(c) *Narrative.*—A concise narrative description of progress made, results accomplished, and any unusual difficulties encountered must be furnished as an attachment to this Report and Voucher. Wherever possible, the narrative is to be illustrated with maps or sketches showing formations penetrated and location and assays of samples taken as well as advances in workings. In the case of diamond drilling or churn drilling, the location and inclination of holes is to be shown on a map; logs and assays also are to be submitted.

The Monthly Report of Operator should be prepared in an original and four copies all of which must be sent to the Executive Officer of the Region not later than the 15th of the month following.

Preparation of Form MF-104—Operator's Monthly Report and Voucher.—All the applicable spaces in Form MF-104 should be filled in by the Operator, and the Operator or his agent should sign the certification in the lower left corner of the form.

The items of costs are arranged in the order they appear in Article 6 (a) of Form MF-200 (Revised February 1952), however, this form is readily adaptable for use in reporting activities under other contract forms.

Under Item (1) delete words "Short Form" if the contract is a sub-contract under Form MF-200; and delete word "Independent" if the contract reported is on Form MF-200 (A). Also, report work paid for on a unit basis under contract Form MF-200 as though it were performed under an independent contract.

Under Item (2) include labor, supervision and technical services incurred for the exploratory operations. Do not include labor, supervision and technical services used for work performed under items (5) and (6).

Under Item (3) include the costs of material and supplies used in the project other than that used under items (5) and (6).

Under Item (4) appear the three types of operating equipment expenditures, that is, rental, purchase and depreciation. The expenditures made for renting equipment belonging to a third party will be reported under "Rental". The amount paid or duly obligated for payment for the purchase of equipment will be reported under "Purchase". The amount of expenditures due the Operator to reimburse him for depreciation of equipment owned will be reported under "Depreciation".

Item (5) comprises costs of labor, supervision, technical services, materials, etc., which are used in the initial rehabilitation and repair of existing buildings, installations, fixtures, and equipment. These costs, therefore, should not be reported under items (2) and (3).

Item (6) includes the labor, supervision, technical services, materials, etc., used in the installation or construction of new buildings, fixed improvements, etc., necessary for the project. These costs, therefore, should not be reported under items (2) and (3).

Item (7) covers miscellaneous types of expenditure such as payroll taxes, liability insurance, workmen's compensation insurance, repairs to equipment and sampling and analysis. Only that part of payroll taxes, liability insurance and workmen's compensation which are paid by the operator should be reported under item (7). The share paid by the employee as a payroll deduction is to be included under item (2) as labor costs.

Item (8) includes any unforeseen costs not included in the other seven categories.

The original of Form MF-104 when submitted for reimbursable expenses incurred under contract Form MF-200 must be supported by original documentation or by certified copies of purchase orders, payrolls or transcripts of payrolls, unless such documentation has been waived by the Regional Executive Officer. This certification may be stated thus, "Certified True Copy (or Transcript)", followed by appropriate signature. If the Executive Officer of the Region determines that a contract under Form MF-200 should have an "on-site" audit, that is, a Government auditor should make an audit of the Operator's books and records of account, the Operator need not support his monthly voucher with original or certified documents except in cases of equipment purchases whose individual costs exceed $50.00. In these cases the original or a certified copy of the purchase order or invoice should be attached to the Monthly Voucher. N. B.—Only the *original* of Form MF-104 is required to be documented. The four copies of Form MF-104 are not to be thus supported.

Form MF-104 submitted for reimbursement under fixed price contracts on Form MF-200 (A), however, are not required to be supported by documentation of any kind. The Operator will submit his claim under item (1) of Form MF-104 by deleting as stated above the word "Independent" and by showing the number of feet or other units immediately after the appropriate descriptive word, such as, drilling, bulldozing, crosscutting, drifting, etc., and giving the "Monthly Total" amount due. "Totals Previously Reported", and "Totals to Date" columns should also be filled in.

Form MF-104A
(April 1952)

Budget Bureau No. 42-R1151.2

UNITED STATES
DEPARTMENT OF THE INTERIOR
DEFENSE MINERALS EXPLORATION ADMINISTRATION

OCT 26 1959 O.M.E.

OPERATOR'S UNIT COST AND PROGRESS REPORT

Month of Sept 1959 Docket No. DMEA 4659 Contract No. E-1108
Operator's Name Clayton Silver Mines Minerals Pb-Zn
Address Kellogg, Idaho

OPERATION	UNIT	COSTS THIS MONTH	UNITS THIS MONTH	COSTS TO DATE	UNITS TO DATE	UNIT COSTS TO DATE	AUTHORIZED BY CONTRACT Units	AUTHORIZED BY CONTRACT Unit Costs
Drifting	ft.	4244.28	125.2	31,082.91	916.9	33.90	2150	33.90
Crosscutting								
Raising								
Shafts	ft.	---	---	44,700.00	300	149.	300	149.
Winzes								
~~Drilling: Core~~ Excavation Sta.	cu. ft.	---	---	1,860.00	3000	0.62	3000	0.62
~~Churn~~ Pocket	cu. ft.	---	---	1,860.00	3000	0.62	3000	0.62
~~Auger~~ Sump	cu. ft.	---	---	2,480.00	4000	0.62	4000	0.62
Stripping								
Trenching								
Test Pits								
Roads and Trails								
TOTAL DISTRIBUTED COSTS		4244.28		81,982.91				TOTAL COSTS AUTHORIZED BY CONTRACT
Operating Equipment Purchased								
Initial Rehabilitation and Repairs								
New Buildings, Improvements, etc.								
Engineering				5750.00				5,750.
TOTAL COSTS		4244.28		87,732.91				130,840.

The undersigned company, and the official executing this certification on its behalf, hereby certify that the information contained in this report is correct and complete to the best of their knowledge and belief.

Date 10/12/59 Operator Clayt9n Silver Mines

Per M M Smith Title General Manager

NOTE.—Title 18, U. S. Code (Crimes), section 1001, makes it a criminal offense to make a willfully false statement or representation to any department or agency of the United States as to any matter within its jurisdiction.

REMARKS:

(Instructions on reverse)

(For Government use only)

/s/ Stephen W. Zoldok, 10/19/59

INSTRUCTIONS

Preparation of Form MF-104A—Operator's Unit Cost and Progress Report.—Applicable places on Form 104A should be filled in by the Operator. The purpose of this form is twofold as follows: (1) to furnish the supervising engineers and other administrators with statistical information necessary to better determine the progress of the project; and (2) to furnish more permanent information on mining costs for future use. The more important phases of operation on which permanent information is desired have been outlined in the form. There are blank lines, however, for those unusual phases which may need to be reported for a particular project. It will be necessary for the Operator to distribute his costs among the applicable phases reported with the exception of three items the costs of which are not to be distributed by the Operator. These three items are: "Operating Equipment Purchased", "Initial Rehabilitation and Repairs", and "New Buildings, Improvements, etc." The reason for not distributing these items on a monthly basis is doubtless clear to the Operator, since such distribution might well overstate the cost for any one month or period short of the entire contract period.

Form MF-104A has been designed to tie in with Form MF-104 for both monthly and cumulative costs. The "Total Costs" on Form MF-104A for each month should equal the monthly "Total Costs" as reported on Form MF-104. This is also true of the "Total Costs To Date".

In preparing Form MF-104A, it will be necessary frequently to distribute certain costs over a number of items. For instance, supervisory and engineering costs may have to be distributed over several phases, such as, drifting, crosscutting, raising, etc., provided that these items were reported active for the month. Such distributions should be made on the basis of time spent on the various phases, on man days of labor charged to such phases, or on some other equitable basis. "Operating Equipment", "Initial Rehabilitation and Repairs", and "New Buildings Improvements, etc.", will be distributed to the several phases of the project by the Washington Office of DMEA at the close of the project if determined necessary. The last two columns headed "Authorized by Contract" will be filled in by the Operator if such information is found in the contract. This information is usually a part of Exhibit "A" of the contract. A space for remarks has been provided for the use of the Operator to call attention to any unusual circumstances causing excessive or disproportionate unit costs.

GPO 872894

CLAYTON SILVER MINES

Docket No. DMEA 4659
Contract No. Idm-E-1108

NARRATIVE

Month of September 1959

The 800 North Drift was advanced northward on line 125.2 feet to a point 251.0 feet north of Station 807.

No ore below 500 level was recovered.

Royalties on 258 tons of ore produced from below 500 in August can not be calculated, due to smelter shut-down about August 20 because of strike. Some of the concentrate produced from this ore is held in inventory awa it ing opening of smelter.

Submitted by:

Norman M. Smith
General Manager

Form MF-104 (Rev.)
(April 1952)

Budget Bureau No. 42-R1036.5

UNITED STATES
DEPARTMENT OF THE INTERIOR
DEFENSE MINERALS EXPLORATION ADMINISTRATION

SEP 21 1959
O.M.E.

OPERATOR'S MONTHLY REPORT AND VOUCHER

Month of Aug., 1959 Docket No. DMEA 4659 Contract No. E-1108
Operator's Name Clayton Silver Mines Minerals Pb-Zn
Address Kellogg, Idaho
Contract Amount, $ 130,840. Government Participation: 50% Amount, $ 65,420.

ITEMS OF COSTS	FOR OPERATOR'S USE			FOR GOVERNMENT USE ONLY		
	Monthly Total	Totals Previously Reported	Totals To Date	Approved Monthly Total	Approved Totals Previously Reported	Approved Totals To Date
(1) Independent Short Form Contracts:						
~~Drifting~~ Pocket	---	1,860.00	1,860.00		1860.00	1860.00
~~Raising~~ Sump	---	2,480.00	2,480.00		2480.00	2480.00
~~Crosscutting~~ Sta.	---	1,860.00	1,860.00		1860.00	1860.00
Drifting + Crosscutting	3956.13	22,882.50	26,838.63	3956.13	22,882.50	26,838.63
Shaft	---	44,700.00	44,700.00		44,700.00	44,700.00
(2) Labor and Supervision:						
Labor						
Supervision						
Technical Services	250.00	5500.00	5750.00	250.00	5500.00	5750.00
(3) Operating Mat'ls. and Supplies:						
Timber						
Explosives						
Pipe						
Track						
(4) Operating Equipment:						
Rental						
Purchase						
Depreciation						
(5) Initial Rehabilitation and Repairs						
(6) New Bldgs., Improvements, etc.						
(7) Miscellaneous:						
Repairs to Equipment						
Sampling and Analysis						
Payroll Taxes						
Liability Insurance						
(8) Contingencies (specify):						
TOTALS	4206.13	79,282.50	83,488.63	4206.13	79,282.50	83,488.63

I certify that the above bill is correct and just and that payment therefor has not been received.

Date 9/11/59 *Payee Clayton Silver Mines

Per [signature] Title General Manager

*When a voucher is signed or receipted in the name of a company or corporation, the name of the person writing the company or corporate name, as well as the capacity in which he signs, must appear. For example: "John Doe Company, per John Smith, Secretary," or "Treasurer," as the case may be.

NOTE.—Title 18, U. S. Code (Crimes), section 1001, makes it a criminal offense to make a willfully false statement or representation to any department or agency of the United States as to any matter within its jurisdiction.

(Instructions on reverse)

Pursuant to authority vested in me, I certify that this account is correct and proper for payment in the amount of:

2103.06

$ 2103.06

Signature Dorothy F. Fong
(Authorized Certifying Officer)

Date 9/16/59 Vou. No. 2323

(See other side)

(For Government use only)

CERTIFICATION BY GOVERNMENT REPRESENTATIVE:

I certify that to the best of my knowledge and belief the contractor submitting this voucher is operating a Defense Minerals Exploration Administration project under Contract No. E 1108 in accordance with the terms of the contract.

Signature /s/ Stephen W. Zoldak Title Mining Engr. Date 9-15-59

APPROVAL BY ~~DMEA~~ OME EXECUTIVE OFFICER OR ALTERNATE:

Signature /s/ Donald R. MacPherson Title Alternate Acting Exec. Officer Date Sept. 16, 1959

MONTHLY REPORT OF OPERATOR

The Operator (Contractor) of an exploration project is required to make a monthly report to the Government through the Regional Executive Officer. This report consists of three parts as follows:

(a) *Form MF-104—Operator's Monthly Report and Voucher.*—This form details expenditures and constitutes a voucher for reimbursing the Operator for the Government's share of costs;

(b) *Form MF-104A—Operator's Unit Cost and Progress Report.*—This is a statistical report of expenditures which shows costs for the various types of operation; and

(c) *Narrative.*—A concise narrative description of progress made, results accomplished, and any unusual difficulties encountered must be furnished as an attachment to this Report and Voucher. Wherever possible, the narrative is to be illustrated with maps or sketches showing formations penetrated and location and assays of samples taken as well as advances in workings. In the case of diamond drilling or churn drilling, the location and inclination of holes is to be shown on a map; logs and assays also are to be submitted.

The Monthly Report of Operator should be prepared in an original and four copies all of which must be sent to the Executive Officer of the Region not later than the 15th of the month following.

Preparation of Form MF-104—Operator's Monthly Report and Voucher.—All the applicable spaces in Form MF-104 should be filled in by the Operator, and the Operator or his agent should sign the certification in the lower left corner of the form.

The items of costs are arranged in the order they appear in Article 6 (a) of Form MF-200 (Revised February 1952), however, this form is readily adaptable for use in reporting activities under other contract forms.

Under Item (1) delete words "Short Form" if the contract is a sub-contract under Form MF-200; and delete word "Independent" if the contract reported is on Form MF-200 (A). Also, report work paid for on a unit basis under contract Form MF-200 as though it were performed under an independent contract.

Under Item (2) include labor, supervision and technical services incurred for the exploratory operations. Do not include labor, supervision and technical services used for work performed under items (5) and (6).

Under Item (3) include the costs of material and supplies used in the project other than that used under items (5) and (6).

Under Item (4) appear the three types of operating equipment expenditures, that is, rental, purchase and depreciation. The expenditures made for renting equipment belonging to a third party will be reported under "Rental". The amount paid or duly obligated for payment for the purchase of equipment will be reported under "Purchase". The amount of expenditures due the Operator to reimburse him for depreciation of equipment owned will be reported under "Depreciation".

Item (5) comprises costs of labor, supervision, technical services, materials, etc., which are used in the initial rehabilitation and repair of existing buildings, installations, fixtures, and equipment. These costs, therefore, should not be reported under items (2) and (3).

Item (6) includes the labor, supervision, technical services, materials, etc., used in the installation or construction of new buildings, fixed improvements, etc., necessary for the project. These costs, therefore, should not be reported under items (2) and (3).

Item (7) covers miscellaneous types of expenditure such as payroll taxes, liability insurance, workmen's compensation insurance, repairs to equipment and sampling and analysis. Only that part of payroll taxes, liability insurance and workmen's compensation which are paid by the operator should be reported under item (7). The share paid by the employee as a payroll deduction is to be included under item (2) as labor costs.

Item (8) includes any unforeseen costs not included in the other seven categories.

The original of Form MF-104 when submitted for reimbursable expenses incurred under contract Form MF-200 must be supported by original documentation or by certified copies of purchase orders, payrolls or transcripts of payrolls, unless such documentation has been waived by the Regional Executive Officer. This certification may be stated thus, "Certified True Copy (or Transcript)", followed by appropriate signature. If the Executive Officer of the Region determines that a contract under Form MF-200 should have an "on-site" audit, that is, a Government auditor should make an audit of the Operator's books and records of account, the Operator need not support his monthly voucher with original or certified documents except in cases of equipment purchases whose individual costs exceed $50.00. In these cases the original or a certified copy of the purchase order or invoice should be attached to the Monthly Voucher. N. B.—Only the *original* of Form MF-104 is required to be documented. The four copies of Form MF-104 are not to be thus supported.

Form MF-104 submitted for reimbursement under fixed price contracts on Form MF-200 (A), however, are not required to be supported by documentation of any kind. The Operator will submit his claim under item (1) of Form MF-104 by deleting as stated above the word "Independent" and by showing the number of feet or other units immediately after the appropriate descriptive word, such as, drilling, bulldozing, crosscutting, drifting, etc., and giving the "Monthly Total" amount due. "Totals Previously Reported", and "Totals to Date" columns should also be filled in.

Form ME-104A
(April 1952)

Budget Bureau No. 42-R1151.2

SEP 21 1959

UNITED STATES
DEPARTMENT OF THE INTERIOR
DEFENSE MINERALS EXPLORATION ADMINISTRATION
OPERATOR'S UNIT COST AND PROGRESS REPORT

Month of Aug. 1959 Docket No. DMEA 4659 Contract No. E-1108
Operator's Name Clayton Silver Mines Minerals Pb-Zn
Address Kellogg, Idaho

OPERATION	Unit	Costs This Month	Units This Month	Costs to Date	Units to Date	Unit Costs to Date	Authorized by Contract: Units	Authorized by Contract: Unit Costs
Drifting 71.7 }	ft.	3956.13	116.7	26,838.63	791.7	33.90	2150	33.90
Crosscutting 46.0 }								
Raising								
Shafts	ft.	---	---	44,700.00	300	149.	300	149.
Winzes								
Excavation ~~Drifting~~ ~~Cross~~ Sta.	cu. ft.	---	---	1,860.00	3000	0.62	3000	0.62
~~Stope~~ Pocket	cu. ft.	---	---	1,860.00	3000	0.62	3000	0.62
~~Raise~~ Sump	cu. ft.	---	---	2,480.00	4000	0.62	4000	0.62
Stripping								
Trenching								
Test Pits								
Roads and Trails								
Total Distributed Costs		3956.13		77,738.63				Total Costs Authorized by Contract
Operating Equipment Purchased								
Initial Rehabilitation and Repairs								
New Buildings, Improvements, etc.								
Engineering		250.00		5750.00				5,750.
Total Costs		4206.13		83,488.63				130,840.

The undersigned company, and the official executing this certification on its behalf, hereby certify that the information contained in this report is correct and complete to the best of their knowledge and belief.

Date 9/11/59 Operator Clayton Silver Mines

Per [signature] Title General Manager

→ NOTE.—Title 18, U. S. Code (Crimes), section 1001, makes it a criminal offense to make a willfully false statement or representation to any department or agency of the United States as to any matter within its jurisdiction.

Remarks:

(Instructions on reverse)

9-15-59 (For Government use only)

/s/ Stephen W. Zoldok
Mining Engr.

INSTRUCTIONS

Preparation of Form MF-104A—Operator's Unit Cost and Progress Report.—Applicable places on Form 104A should be filled in by the Operator. The purpose of this form is twofold as follows: (1) to furnish the supervising engineers and other administrators with statistical information necessary to better determine the progress of the project; and (2) to furnish more permanent information on mining costs for future use. The more important phases of operation on which permanent information is desired have been outlined in the form. There are blank lines, however, for those unusual phases which may need to be reported for a particular project. It will be necessary for the Operator to distribute his costs among the applicable phases reported with the exception of three items the costs of which are not to be distributed by the Operator. These three items are: "Operating Equipment Purchased", "Initial Rehabilitation and Repairs", and "New Buildings, Improvements, etc." The reason for not distributing these items on a monthly basis is doubtless clear to the Operator, since such distribution might well overstate the cost for any one month or period short of the entire contract period.

Form MF-104A has been designed to tie in with Form MF-104 for both monthly and cumulative costs. The "Total Costs" on Form MF-104A for each month should equal the monthly "Total Costs" as reported on Form MF-104. This is also true of the "Total Costs To Date".

In preparing Form MF-104A, it will be necessary frequently to distribute certain costs over a number of items. For instance, supervisory and engineering costs may have to be distributed over several phases, such as, drifting, crosscutting, raising, etc., provided that these items were reported active for the month. Such distributions should be made on the basis of time spent on the various phases, on man days of labor charged to such phases, or on some other equitable basis. "Operating Equipment", "Initial Rehabilitation and Repairs", and "New Buildings Improvements, etc.", will be distributed to the several phases of the project by the Washington Office of DMEA at the close of the project if determined necessary. The last two columns headed "Authorized by Contract" will be filled in by the Operator if such information is found in the contract. This information is usually a part of Exhibit "A" of the contract. A space for remarks has been provided for the use of the Operator to call attention to any unusual circumstances causing excessive or disproportionate unit costs.

GPO 872894

CLAYTON SILVER MINES

Docket No. DMEA 4659
Contract No. Idm-E-1108

NARRATIVE

Month of August 1959

The 800 North Drift was advanced northward on line 71.7 feet to a point 271.9 feet north of Station 806, or 125.8 feet north of Station 807.

A cross cut was driven Northwesterly a distance of 45.0 feet, from Station 807, for two purposes:

1. to explore for the downward projection of a small mineralized area occurring above on 500 level.

2. to accommodate a switch for cars from the 800 North drift.

An earthquake severely shook and jarred the mine workings on the evening of August 17. This disturbance increased the flow of water in the mine some 300 gallons per minute. All pumps have been running to full capacity since the morning of August 18, when the 500 pump-reservoir filled. By the end of the month no gain has been made on emptying the reservoir. All work was suspended on the 800 level (this project) after Thursday, August 20, from fear of increasing the water flow beyond pump capacity. Two used 4 stage Byron-Jackson 60 H.P. pumps were purchased along with 6" pipe for new column up the shaft to surface, three 75 KVA transformers, and electric cable, switches etc. Installation of this equipment to handle additional water was completed September 10, 1959.

two hundred fifty-eight (258) tons of ore were recovered from ~~700 South~~ raise, on which royalty is payable.

OFFICIAL FILE COPY
O. M. E.
RECEIVED SEP 21 1959

DATE	INITIALS	CODE

Submitted by:

Norman M. Smith
General Manager

Form MF-104 (Rev.)
(April 1952)

Budget Bureau No. 42-R1036.5

AUG 17 1959 O.M.E.

UNITED STATES
DEPARTMENT OF THE INTERIOR
DEFENSE MINERALS EXPLORATION ADMINISTRATION
OPERATOR'S MONTHLY REPORT AND VOUCHER

Month of July, 1959 Docket No. DMEA 4659 Contract No. E-1108
Operator's Name Clayton Silver Mines Minerals Pb-Zn
Address Kellogg, Idaho
Contract Amount, $ 130,840. Government Participation: 50 % Amount, $ 65,420.

ITEMS OF COSTS	FOR OPERATOR'S USE			FOR GOVERNMENT USE ONLY		
	Monthly Total	Totals Previously Reported	Totals To Date	Approved Monthly Total	Approved Totals Previously Reported	Approved Totals To Date
(1) Independent Short Form Contracts:						
~~Drilling~~ Pocket	---	1,860.00	1,860.00		1860.00	1860.00
~~Excavating~~ Sump	---	2,480.00	2,480.00		2480.00	2480.00
~~Crosscutting~~ Sta. ---	---	1,860.00	1,860.00		1860.00	1860.00
Drifting	4515.48	18,367.02	22,882.50	4515.48	18367.02	22882.50
Shaft	---	44,700.00	44,700.00		44700.00	44700.00
(2) Labor and Supervision:						
Labor						
Supervision						
Technical Services	250.00	5250.00	5,500.00	250.00	5250.00	5500.00
(3) Operating Mat'ls. and Supplies:						
Timber						
Explosives						
Pipe						
Track						
(4) Operating Equipment:						
Rental						
Purchase						
Depreciation						
(5) Initial Rehabilitation and Repairs						
(6) New Bldgs., Improvements, etc.						
(7) Miscellaneous:						
Repairs to Equipment						
Sampling and Analysis						
Payroll Taxes						
Liability Insurance						
(8) Contingencies (specify):						
TOTALS	4765.48	74,517.02	79,282.50	4765.48	74517.02	79282.50

I certify that the above bill is correct and just and that payment therefor has not been received.

Date 8-5-59 *Payee Clayton Silver Mines

Per M. M. Smith Title General Manager

*When a voucher is signed or receipted in the name of a company or corporation, the name of the person writing the company or corporate name, as well as the capacity in which he signs, must appear. For example: "John Doe Company, per John Smith, Secretary," or "Treasurer," as the case may be.

NOTE.—Title 18, U. S. Code (Crimes), section 1001, makes it a criminal offense to make a willfully false statement or representation to any department or agency of the United States as to any matter within its jurisdiction.

(Instructions on reverse)

Pursuant to authority vested in me, I certify that this account is correct and proper for payment in the amount of:

$ 23824

Signature Dorothy F. Long
(Authorized Certifying Officer)

Date 8/13/59 Vou. No. 2314

(See other side)

(For Government use only)

CERTIFICATION BY GOVERNMENT REPRESENTATIVE:

I certify that to the best of my knowledge and belief the contractor submitting this voucher is operating a Defense Minerals Exploration Administration project under Contract No. E 1108 in accordance with the terms of the contract.

Signature /s/ Stephen W. Jolcak Title Mining Engr. Date Aug. 6, 1959

APPROVAL BY ~~DMEA~~ DMEE EXECUTIVE OFFICER OR ALTERNATE:

Signature /s/ A. E. Weissenborn Title Exec. Officer Date Aug. 12, 1959

MONTHLY REPORT OF OPERATOR

The Operator (Contractor) of an exploration project is required to make a monthly report to the Government through the Regional Executive Officer. This report consists of three parts as follows:

(a) *Form MF-104—Operator's Monthly Report and Voucher.*—This form details expenditures and constitutes a voucher for reimbursing the Operator for the Government's share of costs;

(b) *Form MF-104A—Operator's Unit Cost and Progress Report.*—This is a statistical report of expenditures which shows costs for the various types of operation; and

(c) *Narrative.*—A concise narrative description of progress made, results accomplished, and any unusual difficulties encountered must be furnished as an attachment to this Report and Voucher. Wherever possible, the narrative is to be illustrated with maps or sketches showing formations penetrated and location and assays of samples taken as well as advances in workings. In the case of diamond drilling or churn drilling, the location and inclination of holes is to be shown on a map; logs and assays also are to be submitted.

The Monthly Report of Operator should be prepared in an original and four copies all of which must be sent to the Executive Officer of the Region not later than the 15th of the month following.

Preparation of Form MF-104—Operator's Monthly Report and Voucher.—All the applicable spaces in Form MF-104 should be filled in by the Operator, and the Operator or his agent should sign the certification in the lower left corner of the form.

The items of costs are arranged in the order they appear in Article 6 (a) of Form MF-200 (Revised February 1952), however, this form is readily adaptable for use in reporting activities under other contract forms.

Under Item (1) delete words "Short Form" if the contract is a sub-contract under Form MF-200; and delete word "Independent" if the contract reported is on Form MF-200 (A). Also, report work paid for on a unit basis under contract Form MF-200 as though it were performed under an independent contract.

Under Item (2) include labor, supervision and technical services incurred for the exploratory operations. Do not include labor, supervision and technical services used for work performed under items (5) and (6).

Under Item (3) include the costs of material and supplies used in the project other than that used under items (5) and (6).

Under Item (4) appear the three types of operating equipment expenditures, that is, rental, purchase and depreciation. The expenditures made for renting equipment belonging to a third party will be reported under "Rental". The amount paid or duly obligated for payment for the purchase of equipment will be reported under "Purchase". The amount of expenditures due the Operator to reimburse him for depreciation of equipment owned will be reported under "Depreciation".

Item (5) comprises costs of labor, supervision, technical services, materials, etc., which are used in the initial rehabilitation and repair of existing buildings, installations, fixtures, and equipment. These costs, therefore, should not be reported under items (2) and (3).

Item (6) includes the labor, supervision, technical services, materials, etc., used in the installation or construction of new buildings, fixed improvements, etc., necessary for the project. These costs, therefore, should not be reported under items (2) and (3).

Item (7) covers miscellaneous types of expenditure such as payroll taxes, liability insurance, workmen's compensation insurance, repairs to equipment and sampling and analysis. Only that part of payroll taxes, liability insurance and workmen's compensation which are paid by the operator should be reported under item (7). The share paid by the employee as a payroll deduction is to be included under item (2) as labor costs.

Item (8) includes any unforeseen costs not included in the other seven categories.

The original of Form MF-104 when submitted for reimbursable expenses incurred under contract Form MF-200 must be supported by original documentation or by certified copies of purchase orders, payrolls or transcripts of payrolls, unless such documentation has been waived by the Regional Executive Officer. This certification may be stated thus, "Certified True Copy (or Transcript)", followed by appropriate signature. If the Executive Officer of the Region determines that a contract under Form MF-200 should have an "on-site" audit, that is, a Government auditor should make an audit of the Operator's books and records of account, the Operator need not support his monthly voucher with original or certified documents except in cases of equipment purchases whose individual costs exceed $50.00. In these cases the original or a certified copy of the purchase order or invoice should be attached to the Monthly Voucher. N. B.—Only the *original* of Form MF-104 is required to be documented. The four copies of Form MF-104 are not to be thus supported.

Form MF-104 submitted for reimbursement under fixed price contracts on Form MF-200 (A), however, are not required to be supported by documentation of any kind. The Operator will submit his claim under item (1) of Form MF-104 by deleting as stated above the word "Independent" and by showing the number of feet or other units immediately after the appropriate descriptive word, such as, drilling, bulldozing, crosscutting, drifting, etc., and giving the "Monthly Total" amount due. "Totals Previously Reported", and "Totals to Date" columns should also be filled in.

Form MF-104A
(April 1952)

Budget Bureau No. 42-R1151.2

AUG 17 1959
OMS

UNITED STATES
DEPARTMENT OF THE INTERIOR
DEFENSE MINERALS EXPLORATION ADMINISTRATION
OPERATOR'S UNIT COST AND PROGRESS REPORT

Month of July 1959 Docket No. DMEA 4659 Contract No. E-1108
Operator's Name Clayton Silver Mines Minerals Pb-Zn
Address Kellogg, Idaho

OPERATION	Unit	Costs This Month	Units This Month	Costs to Date	Units to Date	Unit Costs to Date	Authorized by Contract: Units	Authorized by Contract: Unit Costs
Drifting	ft.	4515.48	133.2	22 882.50	675.	33.90	2150	33.90
Crosscutting								
Raising								
Shafts	ft.	---	---	44,700.00	300	149.	300	149.
Winzes								
Excavation Sta.	cu. ft.	---	---	1,860.00	3000	0.62	3000	0.62
Pocket	cu. ft.	---	---	1,860.00	3000	0.62	3000	0.62
Sump	cu. ft.	---	---	2,480.00	4000	0.62	4000	0.62
Stripping								
Trenching								
Test Pits								
Roads and Trails								
Total Distributed Costs		4515.48		73 782.50				Total Costs Authorized by Contract
Operating Equipment Purchased								
Initial Rehabilitation and Repairs								
New Buildings, Improvements, etc.								
Engineering		250.-		5500.00				5,750.
Total Costs		4765.48		79 282.50				130,840.

The undersigned company, and the official executing this certification on its behalf, hereby certify that the information contained in this report is correct and complete to the best of their knowledge and belief.

Date 8-5-59 Operator Clayton Silver Mines

Per [signature] Title General Manager

NOTE.—Title 18, U. S. Code (Crimes), section 1001, makes it a criminal offense to make a willfully false statement or representation to any department or agency of the United States as to any matter within its jurisdiction.

Remarks:

(Instructions on reverse)

(For Government use only)

/s/ Stephen W. Zoldok
Mining Engr.
Aug. 6, 1959

INSTRUCTIONS

Preparation of Form MF-104A—Operator's Unit Cost and Progress Report.—Applicable places on Form 104A should be filled in by the Operator. The purpose of this form is twofold as follows: (1) to furnish the supervising engineers and other administrators with statistical information necessary to better determine the progress of the project; and (2) to furnish more permanent information on mining costs for future use. The more important phases of operation on which permanent information is desired have been outlined in the form. There are blank lines, however, for those unusual phases which may need to be reported for a particular project. It will be necessary for the Operator to distribute his costs among the applicable phases reported with the exception of three items the costs of which are not to be distributed by the Operator. These three items are: "Operating Equipment Purchased", "Initial Rehabilitation and Repairs", and "New Buildings, Improvements, etc." The reason for not distributing these items on a monthly basis is doubtless clear to the Operator, since such distribution might well overstate the cost for any one month or period short of the entire contract period.

Form MF-104A has been designed to tie in with Form MF-104 for both monthly and cumulative costs. The "Total Costs" on Form MF-104A for each month should equal the monthly "Total Costs" as reported on Form MF-104. This is also true of the "Total Costs To Date".

In preparing Form MF-104A, it will be necessary frequently to distribute certain costs over a number of items. For instance, supervisory and engineering costs may have to be distributed over several phases, such as, drifting, crosscutting, raising, etc., provided that these items were reported active for the month. Such distributions should be made on the basis of time spent on the various phases, on man days of labor charged to such phases, or on some other equitable basis. "Operating Equipment", "Initial Rehabilitation and Repairs", and "New Buildings Improvements, etc.", will be distributed to the several phases of the project by the Washington Office of DMEA at the close of the project if determined necessary. The last two columns headed "Authorized by Contract" will be filled in by the Operator if such information is found in the contract. This information is usually a part of Exhibit "A" of the contract. A space for remarks has been provided for the use of the Operator to call attention to any unusual circumstances causing excessive or disproportionate unit costs.

GPO 872894

CLAYTON SILVER MINES

Docket No. DMEA 4659
Contract No. Idm-E-1108

NARRATIVE

Month of July, 1959

The 800 North Drift was advanced on line northward 133.2 feet to a point 200.2 feet north of Station 806.

Sixty tons of ore were recovered from the 700 South Raise. Royalty is payable on this ore. Payment will be made when smelter settlements are completed.

Enclosed are two (2) copies of the Clayton Silver Mines plan map showing 800 level to date.

EXTRA COPY
O. M. E.
RECEIVED AUG 17 1959

DATE	INITIALS	CODE

Submitted by:

NORMAN M. SMITH
General Manager

Form MF-104 (Rev.)
(April 1952)

Budget Bureau No. 42-R1036.5

JUL 1959 O.M.E.

UNITED STATES
DEPARTMENT OF THE INTERIOR
DEFENSE MINERALS EXPLORATION ADMINISTRATION
OPERATOR'S MONTHLY REPORT AND VOUCHER

Month of June, 1959 Docket No. DMEA 4659 Contract No. E-1108
Operator's Name Clayton Silver Mines Minerals Pb-Zn
Address Kellogg, Idaho
Contract Amount, $ 130,840 Government Participation: 50 % Amount, $ 65,420.

ITEMS OF COSTS	FOR OPERATOR'S USE			FOR GOVERNMENT USE ONLY		
	Monthly Total	Totals Previously Reported	Totals To Date	Approved Monthly Total	Approved Totals Previously Reported	Approved Totals To Date
(1) Independent Short Form Contracts:						
~~Drifting~~ Pocket	---	1,860.00	1,860.00		1860.00	1860.00
~~Drifting~~ Sump	---	2,480.00	2,480.00		2480.00	2480.00
~~Crosscutting~~ Sta.	---	1,860.00	1,860.00		1860.00	1860.00
Drifting	4315.47	14,051.55	18,367.02	4315.47	14051.55	18367.02
Shaft	---	44,700.00	44,700.00		44700.00	44700.00
(2) Labor and Supervision:						
Labor						
Supervision						
Technical Services	250.00	5,000 —	5250.00	250.00	5000.00	5250.00
(3) Operating Mat'ls. and Supplies:						
Timber						
Explosives						
Pipe						
Track						
(4) Operating Equipment:						
Rental						
Purchase						
Depreciation						
(5) Initial Rehabilitation and Repairs						
(6) New Bldgs., Improvements, etc.						
(7) Miscellaneous:						
Repairs to Equipment						
Sampling and Analysis						
Payroll Taxes						
Liability Insurance						
(8) Contingencies (specify):						
TOTALS	4565.47	69,951.55	74,517.02	4565.47	69951.55	74517.02

I certify that the above bill is correct and just and that payment therefor has not been received.

Date 7-10-59 *Payee Clayton Silver Mines

Per M. M. Smith Title General Manager

*When a voucher is signed or receipted in the name of a company or corporation, the name of the person writing the company or corporate name, as well as the capacity in which he signs, must appear. For example: "John Doe Company, per John Smith, Secretary," or "Treasurer," as the case may be.

NOTE.—Title 18, U. S. Code (Crimes), section 1001, makes it a criminal offense to make a willfully false statement or representation to any department or agency of the United States as to any matter within its jurisdiction.

(Instructions on reverse)

Pursuant to authority vested in me, I certify that this account is correct and proper for payment in the amount of:

2282.73

$ 2282.73

Signature Dorothy F. Long
(Authorized Certifying Officer)

Date 7/15/59 Vou. No. 2305

(See other side)

(For Government use only)

CERTIFICATION BY GOVERNMENT REPRESENTATIVE:

I certify that to the best of my knowledge and belief the contractor submitting this voucher is operating a Defense Minerals Exploration Administration project under Contract No. E 1108 in accordance with the terms of the contract.

Signature /s/ William M. Romischer Title Mining Engr. Date 7/13/59

APPROVAL BY ~~DMEA~~ ONE EXECUTIVE OFFICER OR ALTERNATE:

Signature /s/ A. E. Weissenborn Title Exec. Officer Date July 14, 1959

MONTHLY REPORT OF OPERATOR

The Operator (Contractor) of an exploration project is required to make a monthly report to the Government through the Regional Executive Officer. This report consists of three parts as follows:

(a) *Form MF-104—Operator's Monthly Report and Voucher.*—This form details expenditures and constitutes a voucher for reimbursing the Operator for the Government's share of costs;

(b) *Form MF-104A—Operator's Unit Cost and Progress Report.*—This is a statistical report of expenditures which shows costs for the various types of operation; and

(c) *Narrative.*—A concise narrative description of progress made, results accomplished, and any unusual difficulties encountered must be furnished as an attachment to this Report and Voucher. Wherever possible, the narrative is to be illustrated with maps or sketches showing formations penetrated and location and assays of samples taken as well as advances in workings. In the case of diamond drilling or churn drilling, the location and inclination of holes is to be shown on a map; logs and assays also are to be submitted.

The Monthly Report of Operator should be prepared in an original and four copies all of which must be sent to the Executive Officer of the Region not later than the 15th of the month following.

Preparation of Form MF-104—Operator's Monthly Report and Voucher.—All the applicable spaces in Form MF-104 should be filled in by the Operator, and the Operator or his agent should sign the certification in the lower left corner of the form.

The items of costs are arranged in the order they appear in Article 6 (a) of Form MF-200 (Revised February 1952), however, this form is readily adaptable for use in reporting activities under other contract forms.

Under Item (1) delete words "Short Form" if the contract is a sub-contract under Form MF-200; and delete word "Independent" if the contract reported is on Form MF-200 (A). Also, report work paid for on a unit basis under contract Form MF-200 as though it were performed under an independent contract.

Under Item (2) include labor, supervision and technical services incurred for the exploratory operations. Do not include labor, supervision and technical services used for work performed under items (5) and (6).

Under Item (3) include the costs of material and supplies used in the project other than that used under items (5) and (6).

Under Item (4) appear the three types of operating equipment expenditures, that is, rental, purchase and depreciation. The expenditures made for renting equipment belonging to a third party will be reported under "Rental". The amount paid or duly obligated for payment for the purchase of equipment will be reported under "Purchase". The amount of expenditures due the Operator to reimburse him for depreciation of equipment owned will be reported under "Depreciation".

Item (5) comprises costs of labor, supervision, technical services, materials, etc., which are used in the initial rehabilitation and repair of existing buildings, installations, fixtures, and equipment. These costs, therefore, should not be reported under items (2) and (3).

Item (6) includes the labor, supervision, technical services, materials, etc., used in the installation or construction of new buildings, fixed improvements, etc., necessary for the project. These costs, therefore, should not be reported under items (2) and (3).

Item (7) covers miscellaneous types of expenditure such as payroll taxes, liability insurance, workmen's compensation insurance, repairs to equipment and sampling and analysis. Only that part of payroll taxes, liability insurance and workmen's compensation which are paid by the operator should be reported under item (7). The share paid by the employee as a payroll deduction is to be included under item (2) as labor costs.

Item (8) includes any unforeseen costs not included in the other seven categories.

The original of Form MF-104 when submitted for reimbursable expenses incurred under contract Form MF-200 must be supported by original documentation or by certified copies of purchase orders, payrolls or transcripts of payrolls, unless such documentation has been waived by the Regional Executive Officer. This certification may be stated thus, "Certified True Copy (or Transcript)", followed by appropriate signature. If the Executive Officer of the Region determines that a contract under Form MF-200 should have an "on-site" audit, that is, a Government auditor should make an audit of the Operator's books and records of account, the Operator need not support his monthly voucher with original or certified documents except in cases of equipment purchases whose individual costs exceed $50.00. In these cases the original or a certified copy of the purchase order or invoice should be attached to the Monthly Voucher. N. B.—Only the *original* of Form MF-104 is required to be documented. The four copies of Form MF-104 are not to be thus supported.

Form MF-104 submitted for reimbursement under fixed price contracts on Form MF-200 (A), however, are not required to be supported by documentation of any kind. The Operator will submit his claim under item (1) of Form MF-104 by deleting as stated above the word "Independent" and by showing the number of feet or other units immediately after the appropriate descriptive word, such as, drilling, bulldozing, crosscutting, drifting, etc., and giving the "Monthly Total" amount due. "Totals Previously Reported", and "Totals to Date" columns should also be filled in.

Form MF-104A
(April 1952)

Budget Bureau No. 42-R1151.2

JUL 20 1959
D.M.E.

UNITED STATES
DEPARTMENT OF THE INTERIOR
DEFENSE MINERALS EXPLORATION ADMINISTRATION
OPERATOR'S UNIT COST AND PROGRESS REPORT

Month of June 1959 Docket No. DMEA 4659 Contract No. E-1108
Operator's Name Clayton Silver Mines Minerals Pb-Zn
Address Kellogg, Idaho

OPERATION	Unit	Costs This Month	Units This Month	Costs to Date	Units to Date	Unit Costs to Date	Authorized by Contract: Units	Authorized by Contract: Unit Costs
Drifting	ft.	4315.47	127.3	18,367.02	541.8	33.90	2150	33.90
Crosscutting								
Raising								
Shafts	ft.	---	---	44,700.00	300	149.	300	149.
Winzes								
Excavation ~~Stoping~~ Sta.	cu. ft.	---	---	1,860.00	3000	0.62	3000	0.62
~~Chute~~ pocket	cu. ft.	---	---	1,860.00	3000	0.62	3000	0.62
~~Raise~~ Sump	cu. ft.	---	---	2,480.00	4000	0.62	4000	0.62
Stripping								
Trenching								
Test Pits								
Roads and Trails								
Total Distributed Costs		4315.47		69,267.02				Total Costs Authorized by Contract
Operating Equipment Purchased								
Initial Rehabilitation and Repairs								
New Buildings, Improvements, etc.								
Engineering		250.-		5250.—				5,750.
Total Costs		4565.47		74,517.02				130,840.

The undersigned company, and the official executing this certification on its behalf, hereby certify that the information contained in this report is correct and complete to the best of their knowledge and belief.

Date 7/10/59 Operator Clayton Silver Mines

Per [signature] Title General Manager

NOTE.—Title 18, U. S. Code (Crimes), section 1001, makes it a criminal offense to make a willfully false statement or representation to any department or agency of the United States as to any matter within its jurisdiction.

Remarks:

(Instructions on reverse)

(For Government use only)

/s/ William M. Romischer, 7/13/59

INSTRUCTIONS

Preparation of Form MF-104A—Operator's Unit Cost and Progress Report.—Applicable places on Form 104A should be filled in by the Operator. The purpose of this form is twofold as follows: (1) to furnish the supervising engineers and other administrators with statistical information necessary to better determine the progress of the project; and (2) to furnish more permanent information on mining costs for future use. The more important phases of operation on which permanent information is desired have been outlined in the form. There are blank lines, however, for those unusual phases which may need to be reported for a particular project. It will be necessary for the Operator to distribute his costs among the applicable phases reported with the exception of three items the costs of which are not to be distributed by the Operator. These three items are: "Operating Equipment Purchased", "Initial Rehabilitation and Repairs", and "New Buildings, Improvements, etc." The reason for not distributing these items on a monthly basis is doubtless clear to the Operator, since such distribution might well overstate the cost for any one month or period short of the entire contract period.

Form MF-104A has been designed to tie in with Form MF-104 for both monthly and cumulative costs. The "Total Costs" on Form MF-104A for each month should equal the monthly "Total Costs" as reported on Form MF-104. This is also true of the "Total Costs To Date".

In preparing Form MF-104A, it will be necessary frequently to distribute certain costs over a number of items. For instance, supervisory and engineering costs may have to be distributed over several phases, such as, drifting, crosscutting, raising, etc., provided that these items were reported active for the month. Such distributions should be made on the basis of time spent on the various phases, on man days of labor charged to such phases, or on some other equitable basis. "Operating Equipment", "Initial Rehabilitation and Repairs", and "New Buildings Improvements, etc.", will be distributed to the several phases of the project by the Washington Office of DMEA at the close of the project if determined necessary. The last two columns headed "Authorized by Contract" will be filled in by the Operator if such information is found in the contract. This information is usually a part of Exhibit "A" of the contract. A space for remarks has been provided for the use of the Operator to call attention to any unusual circumstances causing excessive or disproportionate unit costs.

GPO 872894

CLAYTON SILVER MINES

Docket No. DMEA 4659
Contract No. Idm-E-1108

NARRATIVE

The 800 North Drift was advanced on line northward 99.5 feet to a point 375.8 feet north of Station No. 801.

The 800 South Drift was advanced southward 27.8 feet to a point 140.0 feet south of Station No. 802.

A meridian transfer survey was made between 500 and 800 levels and the 800 level was surveyed on June 20, 1959. At a later date when the map is completed from these surveys, a copy will be furnished the Field Team.

Some mineralization has been found in the 800 South Drift, but further exploration will await the raising from 800 to 700 levels.

Submitted by:

OFFICIAL FILE COPY
O. M. E.
RECEIVED JUL 20 1959

DATE	INITIALS	CODE

Norman M. Smith
General Manager

Form MF-104 (Rev.)
(April 1952)

Budget Bureau No. 42-R1036.5

UNITED STATES
DEPARTMENT OF THE INTERIOR
DEFENSE MINERALS EXPLORATION ADMINISTRATION

JUN 1959 O.M.E.

OPERATOR'S MONTHLY REPORT AND VOUCHER

Month of May, 1959 Docket No. DMEA 4659 Contract No. E-1108
Operator's Name Clayton Silver Mines Minerals Pb-Zn
Address Kellogg, Idaho
Contract Amount, $ 130,840. Government Participation: 50 % Amount, $ 65,420.

ITEMS OF COSTS	FOR OPERATOR'S USE			FOR GOVERNMENT USE ONLY		
	Monthly Total	Totals Previously Reported	Totals To Date	Approved Monthly Total	Approved Totals Previously Reported	Approved Totals To Date
(1) Independent Short Form Contracts:						
~~Drifting~~ Pocket	---	1,860.00	1,860.00		1860.00	1860.00
~~Bulldozing~~ Sump	---	2,480.00	2,480.00		2480.00	2480.00
~~Sinking~~ Sta.	---	1,860.00	1,860.00		1860.00	1860.00
Drifting	4271.40	9,780.15	14,051.55	4271.40	9780.15	14051.55
Shaft	---	44,700.00	44,700.00		44700.00	44700.00
(2) Labor and Supervision:						
Labor						
Supervision						
Technical Services	250.00	4,750.00	5,000.00	250.00	4750.00	5000.00
(3) Operating Mat'ls. and Supplies:						
Timber						
Explosives						
Pipe						
Track						
(4) Operating Equipment:						
Rental						
Purchase						
Depreciation						
(5) Initial Rehabilitation and Repairs						
(6) New Bldgs., Improvements, etc.						
(7) Miscellaneous:						
Repairs to Equipment						
Sampling and Analysis						
Payroll Taxes						
Liability Insurance						
(8) Contingencies (specify):						
TOTALS	4521.40	65,430.15	69,951.55	4521.40	65430.15	69951.55

I certify that the above bill is correct and just and that payment therefor has not been received.

Date 6/8/59 *Payee Clayton Silver Mines

Per [signature] Title General Manager

*When a voucher is signed or receipted in the name of a company or corporation, the name of the person writing the company or corporate name, as well as the capacity in which he signs, must appear. For example: "John Doe Company, per John Smith, Secretary," or "Treasurer," as the case may be.

NOTE.—Title 18, U. S. Code (Crimes), section 1001, makes it a criminal offense to make a willfully false statement or representation to any department or agency of the United States as to any matter within its jurisdiction.

(Instructions on reverse)

Pursuant to authority vested in me, I certify that this account is correct and proper for payment in the amount of:

$ 2260.70

Signature [signature]
(Authorized Certifying Officer)

Date 6/11/59 Vou. No. 2361

(See other side)

(For Government use only)

CERTIFICATION BY GOVERNMENT REPRESENTATIVE:

I certify that to the best of my knowledge and belief the contractor submitting this voucher is operating a Defense Minerals Exploration Administration project under Contract No. E 1108 in accordance with the terms of the contract.

Signature /s/ William M. Roneseker Title Mining Engr. Date 6/9/59

APPROVAL BY ~~DMEA~~ OME EXECUTIVE OFFICER OR ALTERNATE:

Signature /s/ Wm. L. Agnew Title Acting Exec. Date 6-11-59

MONTHLY REPORT OF OPERATOR

The Operator (Contractor) of an exploration project is required to make a monthly report to the Government through the Regional Executive Officer. This report consists of three parts as follows:

(a) *Form MF-104—Operator's Monthly Report and Voucher.*—This form details expenditures and constitutes a voucher for reimbursing the Operator for the Government's share of costs;

(b) *Form MF-104A—Operator's Unit Cost and Progress Report.*—This is a statistical report of expenditures which shows costs for the various types of operation; and

(c) *Narrative.*—A concise narrative description of progress made, results accomplished, and any unusual difficulties encountered must be furnished as an attachment to this Report and Voucher. Wherever possible, the narrative is to be illustrated with maps or sketches showing formations penetrated and location and assays of samples taken as well as advances in workings. In the case of diamond drilling or churn drilling, the location and inclination of holes is to be shown on a map; logs and assays also are to be submitted.

The Monthly Report of Operator should be prepared in an original and four copies all of which must be sent to the Executive Officer of the Region not later than the 15th of the month following.

Preparation of Form MF-104—Operator's Monthly Report and Voucher.—All the applicable spaces in Form MF-104 should be filled in by the Operator, and the Operator or his agent should sign the certification in the lower left corner of the form.

The items of costs are arranged in the order they appear in Article 6 (a) of Form MF-200 (Revised February 1952), however, this form is readily adaptable for use in reporting activities under other contract forms.

Under Item (1) delete words "Short Form" if the contract is a sub-contract under Form MF-200; and delete word "Independent" if the contract reported is on Form MF-200 (A). Also, report work paid for on a unit basis under contract Form MF-200 as though it were performed under an independent contract.

Under Item (2) include labor, supervision and technical services incurred for the exploratory operations. Do not include labor, supervision and technical services used for work performed under items (5) and (6).

Under Item (3) include the costs of material and supplies used in the project other than that used under items (5) and (6).

Under Item (4) appear the three types of operating equipment expenditures, that is, rental, purchase and depreciation. The expenditures made for renting equipment belonging to a third party will be reported under "Rental". The amount paid or duly obligated for payment for the purchase of equipment will be reported under "Purchase". The amount of expenditures due the Operator to reimburse him for depreciation of equipment owned will be reported under "Depreciation".

Item (5) comprises costs of labor, supervision, technical services, materials, etc., which are used in the initial rehabilitation and repair of existing buildings, installations, fixtures, and equipment. These costs, therefore, should not be reported under items (2) and (3).

Item (6) includes the labor, supervision, technical services, materials, etc., used in the installation or construction of new buildings, fixed improvements, etc., necessary for the project. These costs, therefore, should not be reported under items (2) and (3).

Item (7) covers miscellaneous types of expenditure such as payroll taxes, liability insurance, workmen's compensation insurance, repairs to equipment and sampling and analysis. Only that part of payroll taxes, liability insurance and workmen's compensation which are paid by the operator should be reported under item (7). The share paid by the employee as a payroll deduction is to be included under item (2) as labor costs.

Item (8) includes any unforeseen costs not included in the other seven categories.

The original of Form MF-104 when submitted for reimbursable expenses incurred under contract Form MF-200 must be supported by original documentation or by certified copies of purchase orders, payrolls or transcripts of payrolls, unless such documentation has been waived by the Regional Executive Officer. This certification may be stated thus, "Certified True Copy (or Transcript)", followed by appropriate signature. If the Executive Officer of the Region determines that a contract under Form MF-200 should have an "on-site" audit, that is, a Government auditor should make an audit of the Operator's books and records of account, the Operator need not support his monthly voucher with original or certified documents except in cases of equipment purchases whose individual costs exceed $50.00. In these cases the original or a certified copy of the purchase order or invoice should be attached to the Monthly Voucher. N. B.—Only the *original* of Form MF-104 is required to be documented. The four copies of Form MF-104 are not to be thus supported.

Form MF-104 submitted for reimbursement under fixed price contracts on Form MF-200 (A), however, are not required to be supported by documentation of any kind. The Operator will submit his claim under item (1) of Form MF-104 by deleting as stated above the word "Independent" and by showing the number of feet or other units immediately after the appropriate descriptive word, such as, drilling, bulldozing, crosscutting, drifting, etc., and giving the "Monthly Total" amount due. "Totals Previously Reported", and "Totals to Date" columns should also be filled in.

Form MF-104A
(April 1952)

Budget Bureau No. 42-R1151.2

UNITED STATES
DEPARTMENT OF THE INTERIOR

DEFENSE MINERALS EXPLORATION ADMINISTRATION

OPERATOR'S UNIT COST AND PROGRESS REPORT

Month of May 1959 Docket No. DMEA 4659 Contract No. E-1108

Operator's Name Clayton Silver Mines Minerals Pb-Zn

Address Kellogg, Idaho

OPERATION	Unit	Costs This Month	Units This Month	Costs to Date	Units to Date	Unit Costs to Date	Authorized by Contract: Units	Authorized by Contract: Unit Costs
Drifting	ft.	4271.40	126.0	14,051.55	414.5	33.90	2150	33.90
Crosscutting								
Raising	ft.	---	---	44,700.00	300	149	300	149.
Shafts								
Excavation Sta.	cu. ft.	---	---	1,860.00	3000	0.62	3000	0.62
Drilling: Core Pocket	cu. ft.	---	---	1,860.00	3000	0.62	3000	0.62
Churn Sump	cu. ft.	---	---	2,480.00	4000	0.62	4000	0.62
Auger								
Stripping								
Trenching								
Test Pits								
Roads and Trails								
Total Distributed Costs		4271.40		64,951.55				Total Costs Authorized by Contract
Operating Equipment Purchased								
Initial Rehabilitation and Repairs								
New Buildings, Improvements, etc.								
Engineering		250.00		5,000.00				5,750.
Total Costs		4521.40		69,951.55				130,840.

The undersigned company, and the official executing this certification on its behalf, hereby certify that the information contained in this report is correct and complete to the best of their knowledge and belief.

Date 6/8/59 Operator Clayton Silver Mines

Per M. M. Galbraith Title General Manager

Remarks:

→ NOTE.—Title 18, U. S. Code (Crimes), section 1001, makes it a criminal offense to make a willfully false statement or representation to any department or agency of the United States as to any matter within its jurisdiction.

(Instructions on reverse)

(For Government use only)

/s/ William M. Romeschu, 6/9/59

INSTRUCTIONS

Preparation of Form MF-104A—Operator's Unit Cost and Progress Report.—Applicable places on Form 104A should be filled in by the Operator. The purpose of this form is twofold as follows: (1) to furnish the supervising engineers and other administrators with statistical information necessary to better determine the progress of the project; and (2) to furnish more permanent information on mining costs for future use. The more important phases of operation on which permanent information is desired have been outlined in the form. There are blank lines, however, for those unusual phases which may need to be reported for a particular project. It will be necessary for the Operator to distribute his costs among the applicable phases reported with the exception of three items the costs of which are not to be distributed by the Operator. These three items are: "Operating Equipment Purchased", "Initial Rehabilitation and Repairs", and "New Buildings, Improvements, etc." The reason for not distributing these items on a monthly basis is doubtless clear to the Operator, since such distribution might well overstate the cost for any one month or period short of the entire contract period.

Form MF-104A has been designed to tie in with Form MF-104 for both monthly and cumulative costs. The "Total Costs" on Form MF-104A for each month should equal the monthly "Total Costs" as reported on Form MF-104. This is also true of the "Total Costs To Date".

In preparing Form MF-104A, it will be necessary frequently to distribute certain costs over a number of items. For instance, supervisory and engineering costs may have to be distributed over several phases, such as, drifting, crosscutting, raising, etc., provided that these items were reported active for the month. Such distributions should be made on the basis of time spent on the various phases, on man days of labor charged to such phases, or on some other equitable basis. "Operating Equipment", "Initial Rehabilitation and Repairs", and "New Buildings Improvements, etc.", will be distributed to the several phases of the project by the Washington Office of DMEA at the close of the project if determined necessary. The last two columns headed "Authorized by Contract" will be filled in by the Operator if such information is found in the contract. This information is usually a part of Exhibit "A" of the contract. A space for remarks has been provided for the use of the Operator to call attention to any unusual circumstances causing excessive or disproportionate unit costs.

GPO 872894

JUN 15 1959
O.M.E.

CLAYTON SILVER MINES

Docket No. DMEA 4659
Contract No. Idm-E-1108

NARRATIVE

Month of May 1959

The 800 North Drift was advanced on line northward 126.0 feet to a point 276.3 feet north of Station No. 801.

No further work was done on the 800 South Drift. Raises for ventilation are being run between 700 and 500 levels and between 800 and 700 levels.

A survey crew will carry the Clayton survey system from the 500 level to the 800 level on June 20th.

Submitted by:

Norman M. Smith
General Manager

Form MF-104 (Rev.)
(April 1952)

Budget Bureau No. 42-R1036.5

MAY 18 1959 O.M.E.

UNITED STATES
DEPARTMENT OF THE INTERIOR
DEFENSE MINERALS EXPLORATION ADMINISTRATION
OPERATOR'S MONTHLY REPORT AND VOUCHER

Month of April, 1959 Docket No. DMEA 4659 Contract No. E-1108
Operator's Name Clayton Silver Mines Minerals Pb-Zn
Address Kellogg, Idaho
Contract Amount, $ 130,840. Government Participation: 50 % Amount, $ 65,420.

ITEMS OF COSTS	FOR OPERATOR'S USE: Monthly Total	Totals Previously Reported	Totals To Date	FOR GOVERNMENT USE ONLY: Approved Monthly Total	Approved Totals Previously Reported	Approved Totals To Date
(1) Independent Short Form Contracts:						
~~Drilling~~ Pocket	---	1,860.00	1,860.00		1860.00	1860.00
~~Drilling~~ Sump	---	2,480.00	2,480.00		2480.00	2480.00
~~Crosscutting~~ Sta.	---	1,860.00	1,860.00		1860.00	1860.00
Drifting	3305.25	6474.90	9780.15	3305.25	6474.90	9780.15
Shaft	---	44,700.00	44,700.00		44700.00	44700.00
(2) Labor and Supervision:						
Labor						
Supervision						
Technical Services	250.00	4500.00	4750.00	250.00	4500.00	4750.00
(3) Operating Mat'ls. and Supplies:						
Timber						
Explosives						
Pipe						
Track						
(4) Operating Equipment:						
Rental						
Purchase						
Depreciation						
(5) Initial Rehabilitation and Repairs						
(6) New Bldgs., Improvements, etc.						
(7) Miscellaneous:						
Repairs to Equipment						
Sampling and Analysis						
Payroll Taxes						
Liability Insurance						
(8) Contingencies (specify):						
TOTALS	3555.25	61874.90	65430.15	3555.25	61874.90	65430.15

I certify that the above bill is correct and just and that payment therefor has not been received.

Date 5/11/59 *Payee Clayton Silver Mines

Per [signature] Title General Manager

*When a voucher is signed or receipted in the name of a company or corporation, the name of the person writing the company or corporate name, as well as the capacity in which he signs, must appear. For example: "John Doe Company, per John Smith, Secretary," or "Treasurer," as the case may be.

NOTE.—Title 18, U. S. Code (Crimes), section 1001, makes it a criminal offense to make a willfully false statement or representation to any department or agency of the United States as to any matter within its jurisdiction.

(Instructions on reverse)

Pursuant to authority vested in me, I certify that this account is correct and proper for payment in the amount of:

$ 1777.63

Signature [signature] (Authorized Certifying Officer)

Date 5/13/59 Vou. No. 2296

(See other side)

(For Government use only)

CERTIFICATION BY GOVERNMENT REPRESENTATIVE:

I certify that to the best of my knowledge and belief the contractor submitting this voucher is operating a Defense Minerals Exploration Administration project under Contract No. G 1108 in accordance with the terms of the contract.

Signature /s/ William M. Reniecker Title Mining Engr. Date 5/12/59

APPROVAL BY ~~DMEA~~ ONE EXECUTIVE OFFICER OR ALTERNATE:

Signature /s/ Wing L. Agnew Title Acting Exec. Date 5/13/59

MONTHLY REPORT OF OPERATOR

The Operator (Contractor) of an exploration project is required to make a monthly report to the Government through the Regional Executive Officer. This report consists of three parts as follows:

(a) *Form MF-104—Operator's Monthly Report and Voucher.*—This form details expenditures and constitutes a voucher for reimbursing the Operator for the Government's share of costs;

(b) *Form MF-104A—Operator's Unit Cost and Progress Report.*—This is a statistical report of expenditures which shows costs for the various types of operation; and

(c) *Narrative.*—A concise narrative description of progress made, results accomplished, and any unusual difficulties encountered must be furnished as an attachment to this Report and Voucher. Wherever possible, the narrative is to be illustrated with maps or sketches showing formations penetrated and location and assays of samples taken as well as advances in workings. In the case of diamond drilling or churn drilling, the location and inclination of holes is to be shown on a map; logs and assays also are to be submitted.

The Monthly Report of Operator should be prepared in an original and four copies all of which must be sent to the Executive Officer of the Region not later than the 15th of the month following.

Preparation of Form MF-104—Operator's Monthly Report and Voucher.—All the applicable spaces in Form MF-104 should be filled in by the Operator, and the Operator or his agent should sign the certification in the lower left corner of the form.

The items of costs are arranged in the order they appear in Article 6 (a) of Form MF-200 (Revised February 1952), however, this form is readily adaptable for use in reporting activities under other contract forms.

Under Item (1) delete words "Short Form" if the contract is a sub-contract under Form MF-200; and delete word "Independent" if the contract reported is on Form MF-200 (A). Also, report work paid for on a unit basis under contract Form MF-200 as though it were performed under an independent contract.

Under Item (2) include labor, supervision and technical services incurred for the exploratory operations. Do not include labor, supervision and technical services used for work performed under items (5) and (6).

Under Item (3) include the costs of material and supplies used in the project other than that used under items (5) and (6).

Under Item (4) appear the three types of operating equipment expenditures, that is, rental, purchase and depreciation. The expenditures made for renting equipment belonging to a third party will be reported under "Rental". The amount paid or duly obligated for payment for the purchase of equipment will be reported under "Purchase". The amount of expenditures due the Operator to reimburse him for depreciation of equipment owned will be reported under "Depreciation".

Item (5) comprises costs of labor, supervision, technical services, materials, etc., which are used in the initial rehabilitation and repair of existing buildings, installations, fixtures, and equipment. These costs, therefore, should not be reported under items (2) and (3).

Item (6) includes the labor, supervision, technical services, materials, etc., used in the installation or construction of new buildings, fixed improvements, etc., necessary for the project. These costs, therefore, should not be reported under items (2) and (3).

Item (7) covers miscellaneous types of expenditure such as payroll taxes, liability insurance, workmen's compensation insurance, repairs to equipment and sampling and analysis. Only that part of payroll taxes, liability insurance and workmen's compensation which are paid by the operator should be reported under item (7). The share paid by the employee as a payroll deduction is to be included under item (2) as labor costs.

Item (8) includes any unforeseen costs not included in the other seven categories.

The original of Form MF-104 when submitted for reimbursable expenses incurred under contract Form MF-200 must be supported by original documentation or by certified copies of purchase orders, payrolls or transcripts of payrolls, unless such documentation has been waived by the Regional Executive Officer. This certification may be stated thus, "Certified True Copy (or Transcript)", followed by appropriate signature. If the Executive Officer of the Region determines that a contract under Form MF-200 should have an "on-site" audit, that is, a Government auditor should make an audit of the Operator's books and records of account, the Operator need not support his monthly voucher with original or certified documents except in cases of equipment purchases whose individual costs exceed $50.00. In these cases the original or a certified copy of the purchase order or invoice should be attached to the Monthly Voucher. N. B.—Only the *original* of Form MF-104 is required to be documented. The four copies of Form MF-104 are not to be thus supported.

Form MF-104 submitted for reimbursement under fixed price contracts on Form MF-200 (A), however, are not required to be supported by documentation of any kind. The Operator will submit his claim under item (1) of Form MF-104 by deleting as stated above the word "Independent" and by showing the number of feet or other units immediately after the appropriate descriptive word, such as, drilling, bulldozing, crosscutting, drifting, etc., and giving the "Monthly Total" amount due. "Totals Previously Reported", and "Totals to Date" columns should also be filled in.

Form MF-104A
(April 1952)

Budget Bureau No. 42-R1151.2

UNITED STATES
DEPARTMENT OF THE INTERIOR
DEFENSE MINERALS EXPLORATION ADMINISTRATION

MAY 18 1959 O.M.E.

OPERATOR'S UNIT COST AND PROGRESS REPORT

Month of April 1959 Docket No. DMEA 4659 Contract No. E-1108

Operator's Name Clayton Silver Mines Minerals Pb-Zn

Address Kellogg, Idaho

OPERATION	Unit	Costs This Month	Units This Month	Costs to Date	Units to Date	Unit Costs to Date	Authorized by Contract: Units	Authorized by Contract: Unit Costs
Drifting	Ft.	3305.25	97.5	9780.15	288.5	33.90	2150	33.90
Crosscutting								
Raising								
Shafts	Ft.	---	---	44,700.00	300	149.	300	149.
Winzes								
Excavation: Ore Sta.	cu. ft.	---	---	1,860.00	3000	0.62	3000	0.62
Churn Auger: Pocket	cu. ft.	---	---	1,860.00	3000	0.62	3000	0.62
Sump	cu. ft.	---	---	2,480.00	4000	0.62	4000	0.62
Stripping								
Trenching								
Test Pits								
Roads and Trails								
Total Distributed Costs		3305.25		60,680.15				Total Costs Authorized by Contract
Operating Equipment Purchased								
Initial Rehabilitation and Repairs								
New Buildings, Improvements, etc.								
Engineering		250.00		4750.00				5,750.
Total Costs		3555.25		65430.15				130,840.

The undersigned company, and the official executing this certification on its behalf, hereby certify that the information contained in this report is correct and complete to the best of their knowledge and belief.

Date 5/11/59 Operator Clayton Silver Mines

Per [signature] Title General Manager

Remarks:

NOTE.—Title 18, U. S. Code (Crimes), section 1001, makes it a criminal offense to make a willfully false statement or representation to any department or agency of the United States as to any matter within its jurisdiction.

(Instructions on reverse)

(For Government use only)

/s/ William M. Roniseker
5/12/59

INSTRUCTIONS

Preparation of Form MF–104A—Operator's Unit Cost and Progress Report.—Applicable places on Form 104A should be filled in by the Operator. The purpose of this form is twofold as follows: (1) to furnish the supervising engineers and other administrators with statistical information necessary to better determine the progress of the project; and (2) to furnish more permanent information on mining costs for future use. The more important phases of operation on which permanent information is desired have been outlined in the form. There are blank lines, however, for those unusual phases which may need to be reported for a particular project. It will be necessary for the Operator to distribute his costs among the applicable phases reported with the exception of three items the costs of which are not to be distributed by the Operator. These three items are: "Operating Equipment Purchased", "Initial Rehabilitation and Repairs", and "New Buildings, Improvements, etc." The reason for not distributing these items on a monthly basis is doubtless clear to the Operator, since such distribution might well overstate the cost for any one month or period short of the entire contract period.

Form MF–104A has been designed to tie in with Form MF–104 for both monthly and cumulative costs. The "Total Costs" on Form MF–104A for each month should equal the monthly "Total Costs" as reported on Form MF–104. This is also true of the "Total Costs To Date".

In preparing Form MF–104A, it will be necessary frequently to distribute certain costs over a number of items. For instance, supervisory and engineering costs may have to be distributed over several phases, such as, drifting, crosscutting, raising, etc., provided that these items were reported active for the month. Such distributions should be made on the basis of time spent on the various phases, on man days of labor charged to such phases, or on some other equitable basis. "Operating Equipment", "Initial Rehabilitation and Repairs", and "New Buildings Improvements, etc.", will be distributed to the several phases of the project by the Washington Office of DMEA at the close of the project if determined necessary. The last two columns headed "Authorized by Contract" will be filled in by the Operator if such information is found in the contract. This information is usually a part of Exhibit "A" of the contract. A space for remarks has been provided for the use of the Operator to call attention to any unusual circumstances causing excessive or disproportionate unit costs.

GPO 872894

CLAYTON SILVER MINES

Docket No. DMEA 4659
Contract No. Idm-E-1108

NARRATIVE

Month of April 1959

The 800 SouthDrift was advanced Southward 81.2 feet to a point 112.2 feet from the ℄ of the North Drift. No ore has yet been found by this drift. From what is found in the latest work on 700 level it is believed the 800 South Drift is to the east of the ore.

The 800 North Drift was advanced Northward 16.3 feet to a point 150.3 feet north from Station 801 (800 ℄ Station).

Submitted by:

Norman M. Smith
General Manager

MF-104 (Rev.)
April 1952)

UNITED STATES
DEPARTMENT OF THE INTERIOR
DEFENSE MINERALS EXPLORATION ADMINISTRATION

Budget Bureau No. 42-R1036.5

APR 20 1959 O.M.E.

OPERATOR'S MONTHLY REPORT AND VOUCHER

Month of March, 1959 Docket No. DMEA 4659 Contract No. 1108

Operator's Name Clayton Silver Mines Minerals Pb-Zn

Address Kellogg, Idaho

Contract Amount, $ 130,840. Government Participation: 50 % Amount, $ 65,420.

ITEMS OF COSTS	FOR OPERATOR'S USE: Monthly Total	Totals Previously Reported	Totals To Date	FOR GOVERNMENT USE ONLY: Approved Monthly Total	Approved Totals Previously Reported	Approved Totals To Date
(1) Independent Short Form Contracts:						
~~Drilling~~ Pocket	---	1,860.00	1,860.00		1860.00	1860.00
~~Bulldozing~~ Sump	---	2,480.00	2,480.00		2480.00	2480.00
~~Crosscutting~~ Sta.	---	1,860.00	1,860.00		1860.00	1860.00
Drifting	1559.40	4915.50	6474.90	1559.40	4915.50	6474.90
Shaft	---	44,700.00	44,700.00		44700.00	44700.00
(2) Labor and Supervision:						
Labor						
Supervision						
Technical Services	250.00	4250.00	4,500.00	250.00	4250.00	4500.00
(3) Operating Mat'ls. and Supplies:						
Timber						
Explosives						
Pipe						
Track						
(4) Operating Equipment:						
Rental						
Purchase						
Depreciation						
(5) Initial Rehabilitation and Repairs						
(6) New Bldgs., Improvements, etc.						
(7) Miscellaneous:						
Repairs to Equipment						
Sampling and Analysis						
Payroll Taxes						
Liability Insurance						
(8) Contingencies (specify):						
	180.940					
TOTALS	~~1779.40~~	60,065.50	61,874.90	1809.40	60065.50	61874.90

I certify that the above bill is correct and just and that payment therefor has not been received.

Date 4/7/59 *Payee Clayton Silver Mines

Per [signature] Title General Manager

*When a voucher is signed or receipted in the name of a company or corporation, the name of the person writing the company or corporate name, as well as the capacity in which he signs, must appear. For example: "John Doe Company, per John Smith, Secretary," or "Treasurer," as the case may be.

NOTE.—Title 18, U. S. Code (Crimes), section 1001, makes it a criminal offense to make a willfully false statement or representation to any department or agency of the United States as to any matter within its jurisdiction.

(Instructions on reverse)

Pursuant to authority vested in me, I certify that this account is correct and proper for payment in the amount of:

$ 904.70

Signature Dorothy F. Long (Authorized Certifying Officer)

Date 4/15/59 Vou. No. 2288

(See other side)

(For Government use only)

CERTIFICATION BY GOVERNMENT REPRESENTATIVE:

I certify that to the best of my knowledge and belief the contractor submitting this voucher is operating a Defense Minerals Exploration Administration project under Contract No. E1108 in accordance with the terms of the contract.

Signature /s/ William M. Kowischer Title Mining Engr. Date 4/10/59

APPROVAL BY ~~DMEA~~ ONE EXECUTIVE OFFICER OR ALTERNATE:

Signature /s/ A. E. Weissenborn Title Exec. Officer Date April 14, 1959

MONTHLY REPORT OF OPERATOR

The Operator (Contractor) of an exploration project is required to make a monthly report to the Government through the Regional Executive Officer. This report consists of three parts as follows:

(a) *Form MF-104—Operator's Monthly Report and Voucher.*—This form details expenditures and constitutes a voucher for reimbursing the Operator for the Government's share of costs;

(b) *Form MF-104A—Operator's Unit Cost and Progress Report.*—This is a statistical report of expenditures which shows costs for the various types of operation; and

(c) *Narrative.*—A concise narrative description of progress made, results accomplished, and any unusual difficulties encountered must be furnished as an attachment to this Report and Voucher. Wherever possible, the narrative is to be illustrated with maps or sketches showing formations penetrated and location and assays of samples taken as well as advances in workings. In the case of diamond drilling or churn drilling, the location and inclination of holes is to be shown on a map; logs and assays also are to be submitted.

The Monthly Report of Operator should be prepared in an original and four copies all of which must be sent to the Executive Officer of the Region not later than the 15th of the month following.

Preparation of Form MF-104—Operator's Monthly Report and Voucher.—All the applicable spaces in Form MF-104 should be filled in by the Operator, and the Operator or his agent should sign the certification in the lower left corner of the form.

The items of costs are arranged in the order they appear in Article 6 (a) of Form MF-200 (Revised February 1952), however, this form is readily adaptable for use in reporting activities under other contract forms.

Under Item (1) delete words "Short Form" if the contract is a sub-contract under Form MF-200; and delete word "Independent" if the contract reported is on Form MF-200 (A). Also, report work paid for on a unit basis under contract Form MF-200 as though it were performed under an independent contract.

Under Item (2) include labor, supervision and technical services incurred for the exploratory operations. Do not include labor, supervision and technical services used for work performed under items (5) and (6).

Under Item (3) include the costs of material and supplies used in the project other than that used under items (5) and (6).

Under Item (4) appear the three types of operating equipment expenditures, that is, rental, purchase and depreciation. The expenditures made for renting equipment belonging to a third party will be reported under "Rental". The amount paid or duly obligated for payment for the purchase of equipment will be reported under "Purchase". The amount of expenditures due the Operator to reimburse him for depreciation of equipment owned will be reported under "Depreciation".

Item (5) comprises costs of labor, supervision, technical services, materials, etc., which are used in the initial rehabilitation and repair of existing buildings, installations, fixtures, and equipment. These costs, therefore, should not be reported under items (2) and (3).

Item (6) includes the labor, supervision, technical services, materials, etc., used in the installation or construction of new buildings, fixed improvements, etc., necessary for the project. These costs, therefore, should not be reported under items (2) and (3).

Item (7) covers miscellaneous types of expenditure such as payroll taxes, liability insurance, workmen's compensation insurance, repairs to equipment and sampling and analysis. Only that part of payroll taxes, liability insurance and workmen's compensation which are paid by the operator should be reported under item (7). The share paid by the employee as a payroll deduction is to be included under item (2) as labor costs.

Item (8) includes any unforeseen costs not included in the other seven categories.

The original of Form MF-104 when submitted for reimbursable expenses incurred under contract Form MF-200 must be supported by original documentation or by certified copies of purchase orders, payrolls or transcripts of payrolls, unless such documentation has been waived by the Regional Executive Officer. This certification may be stated thus, "Certified True Copy (or Transcript)", followed by appropriate signature. If the Executive Officer of the Region determines that a contract under Form MF-200 should have an "on-site" audit, that is, a Government auditor should make an audit of the Operator's books and records of account, the Operator need not support his monthly voucher with original or certified documents except in cases of equipment purchases whose individual costs exceed $50.00. In these cases the original or a certified copy of the purchase order or invoice should be attached to the Monthly Voucher. N. B.—Only the *original* of Form MF-104 is required to be documented. The four copies of Form MF-104 are not to be thus supported.

Form MF-104 submitted for reimbursement under fixed price contracts on Form MF-200 (A), however, are not required to be supported by documentation of any kind. The Operator will submit his claim under item (1) of Form MF-104 by deleting as stated above the word "Independent" and by showing the number of feet or other units immediately after the appropriate descriptive word, such as, drilling, bulldozing, crosscutting, drifting, etc., and giving the "Monthly Total" amount due. "Totals Previously Reported", and "Totals to Date" columns should also be filled in.

GPO 872893

Form MF-104A
(April 1952)

Budget Bureau No. 42-R1151.2

UNITED STATES
DEPARTMENT OF THE INTERIOR

DEFENSE MINERALS EXPLORATION ADMINISTRATION

OPERATOR'S UNIT COST AND PROGRESS REPORT

Month of March 1957 Docket No. DMEA 4659 Contract No. E-1108
Operator's Name Clayton Silver Mines Minerals Pb-Zn
Address Kellogg, Idaho

OPERATION	Unit	Costs This Month	Units This Month	Costs to Date	Units to Date	Unit Costs to Date	Authorized by Contract: Units	Authorized by Contract: Unit Costs
Drifting	ft.	1559.40	46.6	6474.90	191.	33.90	2150	33.90
Crosscutting								
Raising								
Shafts	ft.	---	---	44,700.00	300	149.	300	149.
Winzes								
Excavation Drilling Adits Sta.	cu. ft.	---	---	1,860.00	3000	0.62	3000	0.62
Chute Pocket	cu. ft.	---	---	1,860.00	3000	0.62	3000	0.62
Mgr. Sump	cu. ft.	---	---	2,480.00	4000	0.62	4000	0.62
Stripping								
Trenching								
Test Pits								
Roads and Trails								
Total Distributed Costs		1559.40		57,374.90				Total Costs Authorized by Contract
Operating Equipment Purchased								
Initial Rehabilitation and Repairs								
New Buildings, Improvements, etc.								
Engineering		250.-		4500.-				5,750.
Total Costs		1779.40 -180940		61,874.90				130,840.

The undersigned company, and the official executing this certification on its behalf, hereby certify that the information contained in this report is correct and complete to the best of their knowledge and belief.

Date 4/7/59 Operator Clayton Silver Mines

Per M. M. Smith Title General Manager

→ NOTE.—Title 18, U. S. Code (Crimes), section 1001, makes it a criminal offense to make a willfully false statement or representation to any department or agency of the United States as to any matter within its jurisdiction.

Remarks:

(Instructions on reverse)

(For Government use only)

/s/ William M. Romeicke, Mining Engr.
4/10/59

INSTRUCTIONS

Preparation of Form MF-104A—Operator's Unit Cost and Progress Report.—Applicable places on Form 104A should be filled in by the Operator. The purpose of this form is twofold as follows: (1) to furnish the supervising engineers and other administrators with statistical information necessary to better determine the progress of the project; and (2) to furnish more permanent information on mining costs for future use. The more important phases of operation on which permanent information is desired have been outlined in the form. There are blank lines, however, for those unusual phases which may need to be reported for a particular project. It will be necessary for the Operator to distribute his costs among the applicable phases reported with the exception of three items the costs of which are not to be distributed by the Operator. These three items are: "Operating Equipment Purchased", "Initial Rehabilitation and Repairs", and "New Buildings, Improvements, etc." The reason for not distributing these items on a monthly basis is doubtless clear to the Operator, since such distribution might well overstate the cost for any one month or period short of the entire contract period.

Form MF-104A has been designed to tie in with Form MF-104 for both monthly and cumulative costs. The "Total Costs" on Form MF-104A for each month should equal the monthly "Total Costs" as reported on Form MF-104. This is also true of the "Total Costs To Date".

In preparing Form MF-104A, it will be necessary frequently to distribute certain costs over a number of items. For instance, supervisory and engineering costs may have to be distributed over several phases, such as, drifting, crosscutting, raising, etc., provided that these items were reported active for the month. Such distributions should be made on the basis of time spent on the various phases, on man days of labor charged to such phases, or on some other equitable basis. "Operating Equipment", "Initial Rehabilitation and Repairs", and "New Buildings Improvements, etc.", will be distributed to the several phases of the project by the Washington Office of DMEA at the close of the project if determined necessary. The last two columns headed "Authorized by Contract" will be filled in by the Operator if such information is found in the contract. This information is usually a part of Exhibit "A" of the contract. A space for remarks has been provided for the use of the Operator to call attention to any unusual circumstances causing excessive or disproportionate unit costs.

GPO 872894

CLAYTON SILVER MINES

Docket No. DMEA 4659
Contract No. Idm. E-1108

NARRATIVE

Month of March 1959

The 800 South Drift was advanced southward a distance of 23.0 feet to a point 31.0 feet from ℄ of N. Drift.

The 800 North Drift was advanced northward a distance of 23.0 feet to a point 130.0 feet from ℄ of Station.

Submitted by:

Norman M. Smith

Form MF-104 (Rev.)
(April 1952)

Budget Bureau No. 42-R1036.5

UNITED STATES
DEPARTMENT OF THE INTERIOR
DEFENSE MINERALS EXPLORATION ADMINISTRATION
OPERATOR'S MONTHLY REPORT AND VOUCHER

MAR 19 1959 O.M.E.

Month of Feb, 1959 Docket No. DMEA 4659 Contract No. E-1108
Operator's Name Clayton Silver Mines Minerals Pb-Zn
Address Kellogg, Idaho
Contract Amount, $ 130,840. Government Participation: 50 % Amount, $ 65,420.

ITEMS OF COSTS	FOR OPERATOR'S USE			FOR GOVERNMENT USE ONLY		
	Monthly Total	Totals Previously Reported	Totals To Date	Approved Monthly Total	Approved Totals Previously Reported	Approved Totals To Date
(1) Independent Short Form Contracts:						
~~Drilling~~ Pocket	---	1,860.00	1,860.00		1860.00	1860.00
~~Bulldozing~~ Sump	---	2,480.00	2,480.00		2480.00	2480.00
~~Crosscutting~~ Sta.	---	1,860.00	1,860.00		1860.00	1860.00
Drifting	661.05	4 254.45	4 915.50	661.05	4254.45	4915.50
Shaft	---	44,700.00	44,700.00		44700.00	44700.00
(2) Labor and Supervision:						
Labor						
Supervision						
Technical Services	250.00	4 000.-	4,250.—	250.00	4000.00	4250.00
(3) Operating Mat'ls. and Supplies:						
Timber						
Explosives						
Pipe						
Track						
(4) Operating Equipment:						
Rental						
Purchase						
Depreciation						
(5) Initial Rehabilitation and Repairs						
(6) New Bldgs., Improvements, etc.						
(7) Miscellaneous:						
Repairs to Equipment						
Sampling and Analysis						
Payroll Taxes						
Liability Insurance						
(8) Contingencies (specify):						
TOTALS	911.05	59,154.45	60,065.50	911.05	59154.45	60065.50

I certify that the above bill is correct and just and that payment therefor has not been received.

Date 3/6/59 *Payee Clayton Silver Mines

Per M. M. Smith Title General Manager

*When a voucher is signed or receipted in the name of a company or corporation, the name of the person writing the company or corporate name, as well as the capacity in which he signs, must appear. For example: "John Doe Company, per John Smith, Secretary," or "Treasurer," as the case may be.

NOTE.—Title 18, U. S. Code (Crimes), section 1001, makes it a criminal offense to make a willfully false statement or representation to any department or agency of the United States as to any matter within its jurisdiction.

(Instructions on reverse)

Pursuant to authority vested in me, I certify that this account is correct and proper for payment in the amount of:

$ 455.57

Signature Dorothy F. Pope
(Authorized Certifying Officer)

Date 3/16/59 Vou. No. 22855

(See other side)

(For Government use only)

CERTIFICATION BY GOVERNMENT REPRESENTATIVE:

I certify that to the best of my knowledge and belief the contractor submitting this voucher is operating a Defense Minerals Exploration Administration project under Contract No. E 1108 in accordance with the terms of the contract.

Signature /s/ William M. Kanesiecker Title Mining Engr. Date 3/9/59

APPROVAL BY ~~DMEA~~ ONE EXECUTIVE OFFICER OR ALTERNATE:

Signature /s/ A. E. Weissenborn Title Exec Officer Date March 10, 1959

MONTHLY REPORT OF OPERATOR

The Operator (Contractor) of an exploration project is required to make a monthly report to the Government through the Regional Executive Officer. This report consists of three parts as follows:

(a) *Form MF-104—Operator's Monthly Report and Voucher.*—This form details expenditures and constitutes a voucher for reimbursing the Operator for the Government's share of costs;

(b) *Form MF-104A—Operator's Unit Cost and Progress Report.*—This is a statistical report of expenditures which shows costs for the various types of operation; and

(c) *Narrative.*—A concise narrative description of progress made, results accomplished, and any unusual difficulties encountered must be furnished as an attachment to this Report and Voucher. Wherever possible, the narrative is to be illustrated with maps or sketches showing formations penetrated and location and assays of samples taken as well as advances in workings. In the case of diamond drilling or churn drilling, the location and inclination of holes is to be shown on a map; logs and assays also are to be submitted.

The Monthly Report of Operator should be prepared in an original and four copies all of which must be sent to the Executive Officer of the Region not later than the 15th of the month following.

Preparation of Form MF-104—Operator's Monthly Report and Voucher.—All the applicable spaces in Form MF-104 should be filled in by the Operator, and the Operator or his agent should sign the certification in the lower left corner of the form.

The items of costs are arranged in the order they appear in Article 6 (a) of Form MF-200 (Revised February 1952), however, this form is readily adaptable for use in reporting activities under other contract forms.

Under Item (1) delete words "Short Form" if the contract is a sub-contract under Form MF-200; and delete word "Independent" if the contract reported is on Form MF-200 (A). Also, report work paid for on a unit basis under contract Form MF-200 as though it were performed under an independent contract.

Under Item (2) include labor, supervision and technical services incurred for the exploratory operations. Do not include labor, supervision and technical services used for work performed under items (5) and (6).

Under Item (3) include the costs of material and supplies used in the project other than that used under items (5) and (6).

Under Item (4) appear the three types of operating equipment expenditures, that is, rental, purchase and depreciation. The expenditures made for renting equipment belonging to a third party will be reported under "Rental". The amount paid or duly obligated for payment for the purchase of equipment will be reported under "Purchase". The amount of expenditures due the Operator to reimburse him for depreciation of equipment owned will be reported under "Depreciation".

Item (5) comprises costs of labor, supervision, technical services, materials, etc., which are used in the initial rehabilitation and repair of existing buildings, installations, fixtures, and equipment. These costs, therefore, should not be reported under items (2) and (3).

Item (6) includes the labor, supervision, technical services, materials, etc., used in the installation or construction of new buildings, fixed improvements, etc., necessary for the project. These costs, therefore, should not be reported under items (2) and (3).

Item (7) covers miscellaneous types of expenditure such as payroll taxes, liability insurance, workmen's compensation insurance, repairs to equipment and sampling and analysis. Only that part of payroll taxes, liability insurance and workmen's compensation which are paid by the operator should be reported under item (7). The share paid by the employee as a payroll deduction is to be included under item (2) as labor costs.

Item (8) includes any unforeseen costs not included in the other seven categories.

The original of Form MF-104 when submitted for reimbursable expenses incurred under contract Form MF-200 must be supported by original documentation or by certified copies of purchase orders, payrolls or transcripts of payrolls, unless such documentation has been waived by the Regional Executive Officer. This certification may be stated thus, "Certified True Copy (or Transcript)", followed by appropriate signature. If the Executive Officer of the Region determines that a contract under Form MF-200 should have an "on-site" audit, that is, a Government auditor should make an audit of the Operator's books and records of account, the Operator need not support his monthly voucher with original or certified documents except in cases of equipment purchases whose individual costs exceed $50.00. In these cases the original or a certified copy of the purchase order or invoice should be attached to the Monthly Voucher. N. B.—Only the *original* of Form MF-104 is required to be documented. The four copies of Form MF-104 are not to be thus supported.

Form MF-104 submitted for reimbursement under fixed price contracts on Form MF-200 (A), however, are not required to be supported by documentation of any kind. The Operator will submit his claim under item (1) of Form MF-104 by deleting as stated above the word "Independent" and by showing the number of feet or other units immediately after the appropriate descriptive word, such as, drilling, bulldozing, crosscutting, drifting, etc., and giving the "Monthly Total" amount due. "Totals Previously Reported", and "Totals to Date" columns should also be filled in.

Form MF-104A
(April 1962)

Budget Bureau No. 42-R1151.2

UNITED STATES
DEPARTMENT OF THE INTERIOR

DEFENSE MINERALS EXPLORATION ADMINISTRATION

OPERATOR'S UNIT COST AND PROGRESS REPORT

Month of Feb 1959 Docket No. DMEA 4659 Contract No. E-1108

Operator's Name Clayton Silver Mines Minerals Pb-Zn

Address Kellogg, Idaho

OPERATION	UNIT	COSTS THIS MONTH	UNITS THIS MONTH	COSTS TO DATE	UNITS TO DATE	UNIT COSTS TO DATE	AUTHORIZED BY CONTRACT Units	AUTHORIZED BY CONTRACT Unit Costs
Drifting	ft.	661.05	19.5	4,915.50	145 ~~440~~	33.90	2150	33.90
Crosscutting								
Raising								
Shafts	ft.	---	---	44,700.00	300	149.	300	149.
Winzes								
Excavation ~~Drilling-Core~~ Sta.	cu. ft.	---	---	1,860.00	3000	0.62	3000	0.62
~~Bins~~ Pocket	cu. ft.	---	---	1,860.00	3000	0.62	3000	0.62
~~Mixer~~ Sump	cu. ft.	---	---	2,480.00	4000	0.62	4000	0.62
Stripping								
Trenching								
Test Pits								
Roads and Trails								
TOTAL DISTRIBUTED COSTS		661.05		55,815.50				TOTAL COSTS AUTHORIZED BY CONTRACT
Operating Equipment Purchased								
Initial Rehabilitation and Repairs								
New Buildings, Improvements, etc.								
Engineering		250.—		4,250.—				5,750.
TOTAL COSTS		911.05		60,065.50				130,840.

The undersigned company, and the official executing this certification on its behalf, hereby certify that the information contained in this report is correct and complete to the best of their knowledge and belief.

Date 3/6/59 Operator Clayton Silver Mines

Per M. M. Smith Title General Manager

NOTE.—Title 18, U. S. Code (Crimes), section 1001, makes it a criminal offense to make a willfully false statement or representation to any department or agency of the United States as to any matter within its jurisdiction.

REMARKS:

(Instructions on reverse)

(For Government use only)

/s/ William M. Romischer, 3/9/59

INSTRUCTIONS

Preparation of Form MF-104A—Operator's Unit Cost and Progress Report.—Applicable places on Form 104A should be filled in by the Operator. The purpose of this form is twofold as follows: (1) to furnish the supervising engineers and other administrators with statistical information necessary to better determine the progress of the project; and (2) to furnish more permanent information on mining costs for future use. The more important phases of operation on which permanent information is desired have been outlined in the form. There are blank lines, however, for those unusual phases which may need to be reported for a particular project. It will be necessary for the Operator to distribute his costs among the applicable phases reported with the exception of three items the costs of which are not to be distributed by the Operator. These three items are: "Operating Equipment Purchased", "Initial Rehabilitation and Repairs", and "New Buildings, Improvements, etc." The reason for not distributing these items on a monthly basis is doubtless clear to the Operator, since such distribution might well overstate the cost for any one month or period short of the entire contract period.

Form MF-104A has been designed to tie in with Form MF-104 for both monthly and cumulative costs. The "Total Costs" on Form MF-104A for each month should equal the monthly "Total Costs" as reported on Form MF-104. This is also true of the "Total Costs To Date".

In preparing Form MF-104A, it will be necessary frequently to distribute certain costs over a number of items. For instance, supervisory and engineering costs may have to be distributed over several phases, such as, drifting, crosscutting, raising, etc., provided that these items were reported active for the month. Such distributions should be made on the basis of time spent on the various phases, on man days of labor charged to such phases, or on some other equitable basis. "Operating Equipment", "Initial Rehabilitation and Repairs", and "New Buildings Improvements, etc.", will be distributed to the several phases of the project by the Washington Office of DMEA at the close of the project if determined necessary. The last two columns headed "Authorized by Contract" will be filled in by the Operator if such information is found in the contract. This information is usually a part of Exhibit "A" of the contract. A space for remarks has been provided for the use of the Operator to call attention to any unusual circumstances causing excessive or disproportionate unit costs.

GPO 872894

CLAYTON SILVER MINES

Docket No. DMEA 4659
Contract No. Idm E-1108

NARRATIVE

Month of February 1959

Installations, connected with ore pockets, such as grizzlies and loading chutes were completed on both 800 and 700 levels.

The north drift was advanced northward 15.5 feet.

Some 75 feet north of the shaft a Southwest drift was started, in order to explore the South ore vein. One round was blasted, advancing 4.0 feet. This latter work opened up a large water course. The flow from this course over reached the capacity of the main 500-level pumps. Only by manipulating various storage areas were we able to keep from flooding the 800 level.

All work has been suspended on the 800 until pumps with larger capacity are installed.

This latter installation is expected to be made by the end of the first week in March.

Submitted by:

Norman M. Smith
General Manager

Form MF-104 (Rev.)
(April 1952)

Budget Bureau No. 42-R1036.5

UNITED STATES
DEPARTMENT OF THE INTERIOR
DEFENSE MINERALS EXPLORATION ADMINISTRATION
OPERATOR'S MONTHLY REPORT AND VOUCHER

Month of Jan, 1959 Docket No. DMEA 4659 Contract No. E-1108
Operator's Name Clayton Silver Mines Minerals Pb-Zn
Address Kellogg, Idaho
Contract Amount, $ 130,840 Government Participation: 50 % Amount, $ 65,420

ITEMS OF COSTS	FOR OPERATOR'S USE			FOR GOVERNMENT USE ONLY		
	Monthly Total	Totals Previously Reported	Totals To Date	Approved Monthly Total	Approved Totals Previously Reported	Approved Totals To Date
(1) Independent Short Form Contracts:						
Drilling Pocket	1143.90	716.10	1860.00	1143.90	716.10	1860.00
~~Drilling~~ Excavation	—	2480.—	2480.—		2480.00	2480.00
Crosscutting Sta.	—	1860.—	1860.—		1860.00	1860.00
Drifting	—	4254.45	4254.45		4254.45	4254.45
Shaft	983.40	43716.60	44,700.00	983.40	43716.60	44700.00
(2) Labor and Supervision:						
Labor						
Supervision						
Technical Services	250.—	3750.—	4000.—	250.00	3750.00	4000.00
(3) Operating Mat'ls. and Supplies:						
Timber						
Explosives						
Pipe						
Track						
(4) Operating Equipment:						
Rental						
Purchase						
Depreciation						
(5) Initial Rehabilitation and Repairs						
(6) New Bldgs., Improvements, etc.						
(7) Miscellaneous:						
Repairs to Equipment						
Sampling and Analysis						
Payroll Taxes						
Liability Insurance						
(8) Contingencies (specify):						
TOTALS	2377.30	56,777.15	59,154.45	2377.30	56777.15	59154.45

I certify that the above bill is correct and just and that payment therefor has not been received.

Date 2/5/59 *Payee Clayton Silver Mines

Per [signature] Title General Manager

*When a voucher is signed or receipted in the name of a company or corporation, the name of the person writing the company or corporate name, as well as the capacity in which he signs, must appear. For example: "John Doe Company, per John Smith, Secretary," or "Treasurer," as the case may be.

NOTE.—Title 18, U. S. Code (Crimes), section 1001, makes it a criminal offense to make a willfully false statement or representation to any department or agency of the United States as to any matter within its jurisdiction.

(Instructions on reverse)

Pursuant to authority vested in me, I certify that this account is correct and proper for payment in the amount of:

$ 1188.65

Signature Dorothy F. Long
(Authorized Certifying Officer)

Date 2/10/59 Vou. No. 2278
(See other side)

(For Government use only)

CERTIFICATION BY GOVERNMENT REPRESENTATIVE:

I certify that to the best of my knowledge and belief the contractor submitting this voucher is operating a Defense Minerals Exploration Administration project under Contract No. 6 1108 in accordance with the terms of the contract.

Signature /s/ Stephen W. Jillock Title Mining Engr. Date Feb 9, 1959

APPROVAL BY ~~DMEA~~ OMF EXECUTIVE OFFICER OR ALTERNATE:

Signature /s/ A. E. Weissenborn Title Exec. Officer Date Feb 9, 1959

MONTHLY REPORT OF OPERATOR

The Operator (Contractor) of an exploration project is required to make a monthly report to the Government through the Regional Executive Officer. This report consists of three parts as follows:

(a) *Form MF-104—Operator's Monthly Report and Voucher.*—This form details expenditures and constitutes a voucher for reimbursing the Operator for the Government's share of costs;

(b) *Form MF-104A—Operator's Unit Cost and Progress Report.*—This is a statistical report of expenditures which shows costs for the various types of operation; and

(c) *Narrative.*—A concise narrative description of progress made, results accomplished, and any unusual difficulties encountered must be furnished as an attachment to this Report and Voucher. Wherever possible, the narrative is to be illustrated with maps or sketches showing formations penetrated and location and assays of samples taken as well as advances in workings. In the case of diamond drilling or churn drilling, the location and inclination of holes is to be shown on a map; logs and assays also are to be submitted.

The Monthly Report of Operator should be prepared in an original and four copies all of which must be sent to the Executive Officer of the Region not later than the 15th of the month following.

Preparation of Form MF-104—Operator's Monthly Report and Voucher.—All the applicable spaces in Form MF-104 should be filled in by the Operator, and the Operator or his agent should sign the certification in the lower left corner of the form.

The items of costs are arranged in the order they appear in Article 6 (a) of Form MF-200 (Revised February 1952), however, this form is readily adaptable for use in reporting activities under other contract forms.

Under Item (1) delete words "Short Form" if the contract is a sub-contract under Form MF-200; and delete word "Independent" if the contract reported is on Form MF-200 (A). Also, report work paid for on a unit basis under contract Form MF-200 as though it were performed under an independent contract.

Under Item (2) include labor, supervision and technical services incurred for the exploratory operations. Do not include labor, supervision and technical services used for work performed under items (5) and (6).

Under Item (3) include the costs of material and supplies used in the project other than that used under items (5) and (6).

Under Item (4) appear the three types of operating equipment expenditures, that is, rental, purchase and depreciation. The expenditures made for renting equipment belonging to a third party will be reported under "Rental". The amount paid or duly obligated for payment for the purchase of equipment will be reported under "Purchase". The amount of expenditures due the Operator to reimburse him for depreciation of equipment owned will be reported under "Depreciation".

Item (5) comprises costs of labor, supervision, technical services, materials, etc., which are used in the initial rehabilitation and repair of existing buildings, installations, fixtures, and equipment. These costs, therefore, should not be reported under items (2) and (3).

Item (6) includes the labor, supervision, technical services, materials, etc., used in the installation or construction of new buildings, fixed improvements, etc., necessary for the project. These costs, therefore, should not be reported under items (2) and (3).

Item (7) covers miscellaneous types of expenditure such as payroll taxes, liability insurance, workmen's compensation insurance, repairs to equipment and sampling and analysis. Only that part of payroll taxes, liability insurance and workmen's compensation which are paid by the operator should be reported under item (7). The share paid by the employee as a payroll deduction is to be included under item (2) as labor costs.

Item (8) includes any unforeseen costs not included in the other seven categories.

The original of Form MF-104 when submitted for reimbursable expenses incurred under contract Form MF-200 must be supported by original documentation or by certified copies of purchase orders, payrolls or transcripts of payrolls, unless such documentation has been waived by the Regional Executive Officer. This certification may be stated thus, "Certified True Copy (or Transcript)", followed by appropriate signature. If the Executive Officer of the Region determines that a contract under Form MF-200 should have an "on-site" audit, that is, a Government auditor should make an audit of the Operator's books and records of account, the Operator need not support his monthly voucher with original or certified documents except in cases of equipment purchases whose individual costs exceed $50.00. In these cases the original or a certified copy of the purchase order or invoice should be attached to the Monthly Voucher. N. B.—Only the *original* of Form MF-104 is required to be documented. The four copies of Form MF-104 are not to be thus supported.

Form MF-104 submitted for reimbursement under fixed price contracts on Form MF-200 (A), however, are not required to be supported by documentation of any kind. The Operator will submit his claim under item (1) of Form MF-104 by deleting as stated above the word "Independent" and by showing the number of feet or other units immediately after the appropriate descriptive word, such as, drilling, bulldozing, crosscutting, drifting, etc., and giving the "Monthly Total" amount due. "Totals Previously Reported", and "Totals to Date" columns should also be filled in.

MF-104A
(April 1952)

Budget Bureau No. 42-R1151.2

FEB 16 1959 O.M.E.

UNITED STATES
DEPARTMENT OF THE INTERIOR
DEFENSE MINERALS EXPLORATION ADMINISTRATION
OPERATOR'S UNIT COST AND PROGRESS REPORT

Month of Jan 1959 Docket No. DMEA 4659 Contract No. E-1108
Operator's Name Clayton Silver Mines Minerals Pb-Zn
Address Kellogg, Idaho

OPERATION	Unit	Costs This Month	Units This Month	Costs to Date	Units to Date	Unit Costs to Date	Authorized by Contract: Units	Authorized by Contract: Unit Costs
Drifting	ft.	—	—	4254.45	125.5	33.90	2150	$33.90
Crosscutting								
Raising								
Shafts	ft.	983.40	6.6	44,700.00	300	$149.	300	$149.
Winzes								
Excavation Sta.	cu. ft.	—	—	1860.00	3000	0.62	3000	0.62
Pocket	cu. ft.	1143.90	1845	1860.00	3000	0.62	3000	0.62
Sump	cu. ft.	—	—	2480.-	4000	0.62	4000	0.62
Stripping								
Trenching								
Test Pits								
Roads and Trails								
Total Distributed Costs		2127.30		55,154.45				Total Costs Authorized by Contract
Operating Equipment Purchased								
Initial Rehabilitation and Repairs								
New Buildings, Improvements, etc.								
Engineering		250.00		4,000.00				5,750
Total Costs		2377.30		59,154.45				130,840

The undersigned company, and the official executing this certification on its behalf, hereby certify that the information contained in this report is correct and complete to the best of their knowledge and belief.

Date 2/5/59 Operator Clayton Silver Mines

Per W. M. Smith Title General Manager

NOTE.—Title 18, U. S. Code (Crimes), section 1001, makes it a criminal offense to make a willfully false statement or representation to any department or agency of the United States as to any matter within its jurisdiction.

Remarks:

(Instructions on reverse)

(For Government use only)

/s/ Stephen W. Geldok, Mining Engr.

INSTRUCTIONS

Preparation of Form MF–104A—Operator's Unit Cost and Progress Report.—Applicable places on Form 104A should be filled in by the Operator. The purpose of this form is twofold as follows: (1) to furnish the supervising engineers and other administrators with statistical information necessary to better determine the progress of the project; and (2) to furnish more permanent information on mining costs for future use. The more important phases of operation on which permanent information is desired have been outlined in the form. There are blank lines, however, for those unusual phases which may need to be reported for a particular project. It will be necessary for the Operator to distribute his costs among the applicable phases reported with the exception of three items the costs of which are not to be distributed by the Operator. These three items are: "Operating Equipment Purchased", "Initial Rehabilitation and Repairs", and "New Buildings, Improvements, etc." The reason for not distributing these items on a monthly basis is doubtless clear to the Operator, since such distribution might well overstate the cost for any one month or period short of the entire contract period.

Form MF–104A has been designed to tie in with Form MF–104 for both monthly and cumulative costs. The "Total Costs" on Form MF–104A for each month should equal the monthly "Total Costs" as reported on Form MF–104. This is also true of the "Total Costs To Date".

In preparing Form MF–104A, it will be necessary frequently to distribute certain costs over a number of items. For instance, supervisory and engineering costs may have to be distributed over several phases, such as, drifting, crosscutting, raising, etc., provided that these items were reported active for the month. Such distributions should be made on the basis of time spent on the various phases, on man days of labor charged to such phases, or on some other equitable basis. "Operating Equipment", "Initial Rehabilitation and Repairs", and "New Buildings Improvements, etc.", will be distributed to the several phases of the project by the Washington Office of DMEA at the close of the project if determined necessary. The last two columns headed "Authorized by Contract" will be filled in by the Operator if such information is found in the contract. This information is usually a part of Exhibit "A" of the contract. A space for remarks has been provided for the use of the Operator to call attention to any unusual circumstances causing excessive or disproportionate unit costs.

GPO 872894

CLAYTON SILVER MINES

Docket No. DMEA 4659
Contract No. Idm E-1108

NARRATIVE

Month of January 1959

The shaft was sunk a distance of 10.5 ft. to a point 385.9 ft. below the 500 Sill, and 82.5 ft. below the 800 Sill. On the completion of the above advance the shaft has been sunk a distance of 303.9 ft., or 3.9 ft. over contract specification.

Ore and waste loading pockets have been excavated in excess of 1845 cu. ft. during the month.

Shaft sinking part of this project has been completed. Incidentals, such as stations, sump and pockets excavation have been completed. There are a few installations to be done in February.

Drifting is expected to begin in February.

Submitted by:

Norman M. Smith
General Manager

Form MF-104 (Rev.)
(April 1952)

Budget Bureau No. 42-R1036.5

UNITED STATES
DEPARTMENT OF THE INTERIOR
DEFENSE MINERALS EXPLORATION ADMINISTRATION

JAN 19 1959

OPERATOR'S MONTHLY REPORT AND VOUCHER

Month of Dec, 1958 Docket No. DMEA 4659 Contract No. E-1108
Operator's Name Clayton Silver Mines Minerals Pb-Zn
Address Kellogg, Idaho
Contract Amount, $30,840 Government Participation: 50 % Amount, $15,420

ITEMS OF COSTS	FOR OPERATOR'S USE			FOR GOVERNMENT USE ONLY		
	Monthly Total	Totals Previously Reported	Totals To Date	Approved Monthly Total	Approved Totals Previously Reported	Approved Totals To Date
(1) Independent Short Form Contracts:						
~~Drilling~~ 800 Pocket	716.10		716.10	716.10	—	716.10
~~Blasting~~ Excavation Sump		2480.00	2480.00		2480.00	2480.00
~~Crosscutting~~ 800 Sta		1860.00	1860.00		1860.00	1860.00
Drifting		4254.45	4254.45		4254.45	4254.45
Shaft	2533.00	41183.60	43716.60	2533.00	41183.60	43716.60
(2) Labor and Supervision:						
Labor						
Supervision						
Technical Services	250.00	3500.—	3750.—	250.00	3500.00	3750.00
(3) Operating Mat'ls. and Supplies:						
Timber						
Explosives						
Pipe						
Track						
(4) Operating Equipment:						
Rental						
Purchase						
Depreciation						
(5) Initial Rehabilitation and Repairs						
(6) New Bldgs., Improvements, etc.						
(7) Miscellaneous:						
Repairs to Equipment						
Sampling and Analysis						
Payroll Taxes						
Liability Insurance						
(8) Contingencies (specify):						
TOTALS	3499.10	53278.05	56777.15	3499.10	53278.05	56777.15

I certify that the above bill is correct and just and that payment therefor has not been received.

Date 1/10/59 *Payee Clayton Silver Mines

Per [signature] Title General Manager

*When a voucher is signed or receipted in the name of a company or corporation, the name of the person writing the company or corporate name, as well as the capacity in which he signs, must appear. For example: "John Doe Company, per John Smith, Secretary," or "Treasurer," as the case may be.

NOTE.—Title 18, U. S. Code (Crimes), section 1001, makes it a criminal offense to make a willfully false statement or representation to any department or agency of the United States as to any matter within its jurisdiction.

(Instructions on reverse)

Pursuant to authority vested in me, I certify that this account is correct and proper for payment in the amount of:

$ 1749.55

Signature Dorothy F. Long
(Authorized Certifying Officer)

Date 1/15/59 Vou. No. 2270
(See other side)

(For Government use only)

CERTIFICATION BY GOVERNMENT REPRESENTATIVE:

I certify that to the best of my knowledge and belief the contractor submitting this voucher is operating a Defense Minerals Exploration Administration project under Contract No. G 1108 in accordance with the terms of the contract.

Signature /s/ William M. Ronnicker Title Mining Engr. Date 1/13/59

APPROVAL BY ~~DMEA~~ OME EXECUTIVE OFFICER OR ALTERNATE:

Signature /s/ A. E. Weissenborn Title Exec. Officer Date Jan. 15, 1959

MONTHLY REPORT OF OPERATOR

The Operator (Contractor) of an exploration project is required to make a monthly report to the Government through the Regional Executive Officer. This report consists of three parts as follows:

(a) *Form MF-104—Operator's Monthly Report and Voucher.*—This form details expenditures and constitutes a voucher for reimbursing the Operator for the Government's share of costs;

(b) *Form MF-104A—Operator's Unit Cost and Progress Report.*—This is a statistical report of expenditures which shows costs for the various types of operation; and

(c) *Narrative.*—A concise narrative description of progress made, results accomplished, and any unusual difficulties encountered must be furnished as an attachment to this Report and Voucher. Wherever possible, the narrative is to be illustrated with maps or sketches showing formations penetrated and location and assays of samples taken as well as advances in workings. In the case of diamond drilling or churn drilling, the location and inclination of holes is to be shown on a map; logs and assays also are to be submitted.

The Monthly Report of Operator should be prepared in an original and four copies all of which must be sent to the Executive Officer of the Region not later than the 15th of the month following.

Preparation of Form MF-104—Operator's Monthly Report and Voucher.—All the applicable spaces in Form MF-104 should be filled in by the Operator, and the Operator or his agent should sign the certification in the lower left corner of the form.

The items of costs are arranged in the order they appear in Article 6 (a) of Form MF-200 (Revised February 1952), however, this form is readily adaptable for use in reporting activities under other contract forms.

Under Item (1) delete words "Short Form" if the contract is a sub-contract under Form MF-200; and delete word "Independent" if the contract reported is on Form MF-200 (A). Also, report work paid for on a unit basis under contract Form MF-200 as though it were performed under an independent contract.

Under Item (2) include labor, supervision and technical services incurred for the exploratory operations. Do not include labor, supervision and technical services used for work performed under items (5) and (6).

Under Item (3) include the costs of material and supplies used in the project other than that used under items (5) and (6).

Under Item (4) appear the three types of operating equipment expenditures, that is, rental, purchase and depreciation. The expenditures made for renting equipment belonging to a third party will be reported under "Rental". The amount paid or duly obligated for payment for the purchase of equipment will be reported under "Purchase". The amount of expenditures due the Operator to reimburse him for depreciation of equipment owned will be reported under "Depreciation".

Item (5) comprises costs of labor, supervision, technical services, materials, etc., which are used in the initial rehabilitation and repair of existing buildings, installations, fixtures, and equipment. These costs, therefore, should not be reported under items (2) and (3).

Item (6) includes the labor, supervision, technical services, materials, etc., used in the installation or construction of new buildings, fixed improvements, etc., necessary for the project. These costs, therefore, should not be reported under items (2) and (3).

Item (7) covers miscellaneous types of expenditure such as payroll taxes, liability insurance, workmen's compensation insurance, repairs to equipment and sampling and analysis. Only that part of payroll taxes, liability insurance and workmen's compensation which are paid by the operator should be reported under item (7). The share paid by the employee as a payroll deduction is to be included under item (2) as labor costs.

Item (8) includes any unforeseen costs not included in the other seven categories.

The original of Form MF-104 when submitted for reimbursable expenses incurred under contract Form MF-200 must be supported by original documentation or by certified copies of purchase orders, payrolls or transcripts of payrolls, unless such documentation has been waived by the Regional Executive Officer. This certification may be stated thus, "Certified True Copy (or Transcript)", followed by appropriate signature. If the Executive Officer of the Region determines that a contract under Form MF-200 should have an "on-site" audit, that is, a Government auditor should make an audit of the Operator's books and records of account, the Operator need not support his monthly voucher with original or certified documents except in cases of equipment purchases whose individual costs exceed $50.00. In these cases the original or a certified copy of the purchase order or invoice should be attached to the Monthly Voucher. N. B.—Only the *original* of Form MF-104 is required to be documented. The four copies of Form MF-104 are not to be thus supported.

Form MF-104 submitted for reimbursement under fixed price contracts on Form MF-200 (A), however, are not required to be supported by documentation of any kind. The Operator will submit his claim under item (1) of Form MF-104 by deleting as stated above the word "Independent" and by showing the number of feet or other units immediately after the appropriate descriptive word, such as, drilling, bulldozing, crosscutting, drifting, etc., and giving the "Monthly Total" amount due. "Totals Previously Reported", and "Totals to Date" columns should also be filled in.

Form MF-104A
(April 1952)

Budget Bureau No. 42-R1151.2

JAN 19 1959 O.M.E.

UNITED STATES
DEPARTMENT OF THE INTERIOR
DEFENSE MINERALS EXPLORATION ADMINISTRATION
OPERATOR'S UNIT COST AND PROGRESS REPORT

Month of Dec. 1958 Docket No. DMEA 4659 Contract No. E-1108
Operator's Name Clayton Silver Mines Minerals Pb-Zn
Address Kellogg, Idaho

OPERATION	Unit	Costs This Month	Units This Month	Costs to Date	Units to Date	Unit Costs to Date	Authorized by Contract: Units	Authorized by Contract: Unit Costs
Drifting	ft.			4264.45	125.5	33.90	2150	$33.90
Crosscutting								
Raising								
Shafts	ft.	2533.00	17.0	43716.60	293.4	$149.	300	$149.
Winzes								
Excavation Sta.	cu. ft.			1860.00	3000	0.62	3000	0.62
Pocket	cu. ft.	716.10	1155	716.10	1155	0.62	3000	0.62
Sump	cu. ft.			2480.-	4000	0.62	4000	0.62
Stripping								
Trenching								
Test Pits								
Roads and Trails								
Total Distributed Costs		3249.10		53,027.15				Total Costs Authorized by Contract
Operating Equipment Purchased								
Initial Rehabilitation and Repairs								
New Buildings, Improvements, etc.								
Engineering		250.-		3750.-				5,750
Total Costs		3499.10		56777.15				130,840

The undersigned company, and the official executing this certification on its behalf, hereby certify that the information contained in this report is correct and complete to the best of their knowledge and belief.

Date 1/10/59 Operator Clayton Silver Mines

Per M M Smith Title General Manager

NOTE.—Title 18, U. S. Code (Crimes), section 1001, makes it a criminal offense to make a willfully false statement or representation to any department or agency of the United States as to any matter within its jurisdiction.

Remarks:

(Instructions on reverse)

(For Government use only)

/s/ William M. Romischer
1/13/59

INSTRUCTIONS

Preparation of Form MF-104A—Operator's Unit Cost and Progress Report.—Applicable places on Form 104A should be filled in by the Operator. The purpose of this form is twofold as follows: (1) to furnish the supervising engineers and other administrators with statistical information necessary to better determine the progress of the project; and (2) to furnish more permanent information on mining costs for future use. The more important phases of operation on which permanent information is desired have been outlined in the form. There are blank lines, however, for those unusual phases which may need to be reported for a particular project. It will be necessary for the Operator to distribute his costs among the applicable phases reported with the exception of three items the costs of which are not to be distributed by the Operator. These three items are: "Operating Equipment Purchased", "Initial Rehabilitation and Repairs", and "New Buildings, Improvements, etc." The reason for not distributing these items on a monthly basis is doubtless clear to the Operator, since such distribution might well overstate the cost for any one month or period short of the entire contract period.

Form MF-104A has been designed to tie in with Form MF-104 for both monthly and cumulative costs. The "Total Costs" on Form MF-104A for each month should equal the monthly "Total Costs" as reported on Form MF-104. This is also true of the "Total Costs To Date".

In preparing Form MF-104A, it will be necessary frequently to distribute certain costs over a number of items. For instance, supervisory and engineering costs may have to be distributed over several phases, such as, drifting, crosscutting, raising, etc., provided that these items were reported active for the month. Such distributions should be made on the basis of time spent on the various phases, on man days of labor charged to such phases, or on some other equitable basis. "Operating Equipment", "Initial Rehabilitation and Repairs", and "New Buildings Improvements, etc.", will be distributed to the several phases of the project by the Washington Office of DMEA at the close of the project if determined necessary. The last two columns headed "Authorized by Contract" will be filled in by the Operator if such information is found in the contract. This information is usually a part of Exhibit "A" of the contract. A space for remarks has been provided for the use of the Operator to call attention to any unusual circumstances causing excessive or disproportionate unit costs.

GPO 872894

CLAYTON SILVER MINES

Docket No. DMEA 4659
Contract No. Idm E-1108

NARRATIVE

Month of December, 1958

The shaft was sunk a distance of 17.0 ft. to a point 375.4 ft. below the 500 sill and 72. ft. below the 800 sill. An abundance of water is still being encountered.

Excavation for loading pocket below 800 level amounted to 1155 cu. ft. from an area 10 ft. wide, 10.5 ft. high and 11. ft. deep.

Submitted by:

Norman M. Smith
General Manager

Form MF-104 (Rev.)
(April 1952)

Budget Bureau No. 42-R1036.5

UNITED STATES
DEPARTMENT OF THE INTERIOR
DEFENSE MINERALS EXPLORATION ADMINISTRATION
OPERATOR'S MONTHLY REPORT AND VOUCHER

RECEIVED DEC 17 1958 O.M.E.

Month of Nov. 195 8 Docket No. DMEA 4659 Contract No. E-1108
Operator's Name Clayton Silver Mines Minerals Pb-Zn
Address Kellogg, Idaho
Contract Amount, $130,840 Government Participation: 50 % Amount, $ 65,420

ITEMS OF COSTS	FOR OPERATOR'S USE: Monthly Total	Totals Previously Reported	Totals To Date	FOR GOVERNMENT USE ONLY: Approved Monthly Total	Approved Totals Previously Reported	Approved Totals To Date
(1) Independent Short Form Contracts:						
Drilling						
~~Bulldozing~~ Excavation Sump		4,340.—	4,340.00		2480.00	2480.00
~~Crosscutting~~ " -800 Station					1860.00	1860.00
Drifting	332.22	3,922.23	4,254.45	332.22	3922.23	4254.45
Shaft	1,639.00	39,544.60	41,183.60	1639.00	39544.60	41183.60
(2) Labor and Supervision:						
Labor						
Supervision						
Technical Services	250.00	3,250.00	3,500.00	250.00	3250.00	3500.00
(3) Operating Mat'ls. and Supplies:						
Timber						
Explosives						
Pipe						
Track						
(4) Operating Equipment:						
Rental						
Purchase						
Depreciation						
(5) Initial Rehabilitation and Repairs						
(6) New Bldgs., Improvements, etc.						
(7) Miscellaneous:						
Repairs to Equipment						
Sampling and Analysis						
Payroll Taxes						
Liability Insurance						
(8) Contingencies (specify):						
TOTALS	2221.22	51,056.83	53,278.05	2221.22	51056.83	53278.05

I certify that the above bill is correct and just and that payment therefor has not been received.

Date 12/8/58 *Payee Clayton Silver Mines

Per [signature] Title General Manager

*When a voucher is signed or receipted in the name of a company or corporation, the name of the person writing the company or corporate name, as well as the capacity in which he signs, must appear. For example: "John Doe Company, per John Smith, Secretary," or "Treasurer," as the case may be.

NOTE.—Title 18, U. S. Code (Crimes), section 1001, makes it a criminal offense to make a willfully false statement or representation to any department or agency of the United States as to any matter within its jurisdiction.

(Instructions on reverse)

Pursuant to authority vested in me, I certify that this account is correct and proper for payment in the amount of:

$ 1110.61

Signature Dorothy F. Long
(Authorized Certifying Officer)

Date 12/17/58 Vou. No. 2262

(See other side)

(For Government use only)

CERTIFICATION BY GOVERNMENT REPRESENTATIVE:

I certify that to the best of my knowledge and belief the contractor submitting this voucher is operating a Defense Minerals Exploration Administration project under Contract No. E 1108 in accordance with the terms of the contract.

Signature /s/ Stephen W. Yoldok Title Mining Engr. Date 12-10-58

APPROVAL BY ~~DMEA~~ RMF EXECUTIVE OFFICER OR ALTERNATE:

Signature /s/ A. E. Weissenborn Title Exec. Officer Date Dec. 11, 1958

MONTHLY REPORT OF OPERATOR

The Operator (Contractor) of an exploration project is required to make a monthly report to the Government through the Regional Executive Officer. This report consists of three parts as follows:

(a) *Form MF-104—Operator's Monthly Report and Voucher.*—This form details expenditures and constitutes a voucher for reimbursing the Operator for the Government's share of costs;

(b) *Form MF-104A—Operator's Unit Cost and Progress Report.*—This is a statistical report of expenditures which shows costs for the various types of operation; and

(c) *Narrative.*—A concise narrative description of progress made, results accomplished, and any unusual difficulties encountered must be furnished as an attachment to this Report and Voucher. Wherever possible, the narrative is to be illustrated with maps or sketches showing formations penetrated and location and assays of samples taken as well as advances in workings. In the case of diamond drilling or churn drilling, the location and inclination of holes is to be shown on a map; logs and assays also are to be submitted.

The Monthly Report of Operator should be prepared in an original and four copies all of which must be sent to the Executive Officer of the Region not later than the 15th of the month following.

Preparation of Form MF-104—Operator's Monthly Report and Voucher.—All the applicable spaces in Form MF-104 should be filled in by the Operator, and the Operator or his agent should sign the certification in the lower left corner of the form.

The items of costs are arranged in the order they appear in Article 6 (a) of Form MF-200 (Revised February 1952), however, this form is readily adaptable for use in reporting activities under other contract forms.

Under Item (1) delete words "Short Form" if the contract is a sub-contract under Form MF-200; and delete word "Independent" if the contract reported is on Form MF-200 (A). Also, report work paid for on a unit basis under contract Form MF-200 as though it were performed under an independent contract.

Under Item (2) include labor, supervision and technical services incurred for the exploratory operations. Do not include labor, supervision and technical services used for work performed under items (5) and (6).

Under Item (3) include the costs of material and supplies used in the project other than that used under items (5) and (6).

Under Item (4) appear the three types of operating equipment expenditures, that is, rental, purchase and depreciation. The expenditures made for renting equipment belonging to a third party will be reported under "Rental". The amount paid or duly obligated for payment for the purchase of equipment will be reported under "Purchase". The amount of expenditures due the Operator to reimburse him for depreciation of equipment owned will be reported under "Depreciation".

Item (5) comprises costs of labor, supervision, technical services, materials, etc., which are used in the initial rehabilitation and repair of existing buildings, installations, fixtures, and equipment. These costs, therefore, should not be reported under items (2) and (3).

Item (6) includes the labor, supervision, technical services, materials, etc., used in the installation or construction of new buildings, fixed improvements, etc., necessary for the project. These costs, therefore, should not be reported under items (2) and (3).

Item (7) covers miscellaneous types of expenditure such as payroll taxes, liability insurance, workmen's compensation insurance, repairs to equipment and sampling and analysis. Only that part of payroll taxes, liability insurance and workmen's compensation which are paid by the operator should be reported under item (7). The share paid by the employee as a payroll deduction is to be included under item (2) as labor costs.

Item (8) includes any unforeseen costs not included in the other seven categories.

The original of Form MF-104 when submitted for reimbursable expenses incurred under contract Form MF-200 must be supported by original documentation or by certified copies of purchase orders, payrolls or transcripts of payrolls, unless such documentation has been waived by the Regional Executive Officer. This certification may be stated thus, "Certified True Copy (or Transcript)", followed by appropriate signature. If the Executive Officer of the Region determines that a contract under Form MF-200 should have an "on-site" audit, that is, a Government auditor should make an audit of the Operator's books and records of account, the Operator need not support his monthly voucher with original or certified documents except in cases of equipment purchases whose individual costs exceed $50.00. In these cases the original or a certified copy of the purchase order or invoice should be attached to the Monthly Voucher. N. B.—Only the *original* of Form MF-104 is required to be documented. The four copies of Form MF-104 are not to be thus supported.

Form MF-104 submitted for reimbursement under fixed price contracts on Form MF-200 (A), however, are not required to be supported by documentation of any kind. The Operator will submit his claim under item (1) of Form MF-104 by deleting as stated above the word "Independent" and by showing the number of feet or other units immediately after the appropriate descriptive word, such as, drilling, bulldozing, crosscutting, drifting, etc., and giving the "Monthly Total" amount due. "Totals Previously Reported", and "Totals to Date" columns should also be filled in.

Form MF-104A
(April 1952)

Budget Bureau No. 42-R1151.2

RECEIVED DEC 1958 O.M.E.

UNITED STATES
DEPARTMENT OF THE INTERIOR
DEFENSE MINERALS EXPLORATION ADMINISTRATION
OPERATOR'S UNIT COST AND PROGRESS REPORT

Month of Nov 1958 Docket No. DMEA 4659 Contract No. B-1108
Operator's Name Clayton Silver Mines Minerals Pb-Zn
Address Kellogg, Idaho

OPERATION	Unit	Costs This Month	Units This Month	Costs to Date	Units to Date	Unit Costs to Date	Authorized by Contract: Units	Authorized by Contract: Unit Costs
Drifting	ft.	332.22	9.8	4254.45	126.5	33.90	2150	$33.90
Crosscutting								
Raising								
Shafts	ft.	1639.00	11.0	41183.60	276.4	$149.	300	$149.
Winzes								
Excavation Drilling: Core Sta.	cu. ft.			1860.00	3000	0.62	3000	0.62
Churn Pocket	cu. ft.					0.62	3000	0.62
Auger Sump	cu. ft.			2480.—	4000	0.62	4000	0.62
Stripping								
Trenching								
Test Pits								
Roads and Trails								
Total Distributed Costs		1971.22		49778.05				Total Costs Authorized by Contract
Operating Equipment Purchased								
Initial Rehabilitation and Repairs								
New Buildings, Improvements, etc.								
Engineering		250.—		3500.—				5,750
Total Costs		2221.22		53,278.05				130,840

The undersigned company, and the official executing this certification on its behalf, hereby certify that the information contained in this report is correct and complete to the best of their knowledge and belief.

Date 12/8/58 Operator Clayton Silver Mines

Per M. M. Smith Title General Manager

NOTE.—Title 18, U. S. Code (Crimes), section 1001, makes it a criminal offense to make a willfully false statement or representation to any department or agency of the United States as to any matter within its jurisdiction.

Remarks:

(Instructions on reverse)

(For Government use only)

12-10-58
Stephen W. Foldok
Mining Engr.

INSTRUCTIONS

Preparation of Form MF-104A—Operator's Unit Cost and Progress Report.—Applicable places on Form 104A should be filled in by the Operator. The purpose of this form is twofold as follows: (1) to furnish the supervising engineers and other administrators with statistical information necessary to better determine the progress of the project; and (2) to furnish more permanent information on mining costs for future use. The more important phases of operation on which permanent information is desired have been outlined in the form. There are blank lines, however, for those unusual phases which may need to be reported for a particular project. It will be necessary for the Operator to distribute his costs among the applicable phases reported with the exception of three items the costs of which are not to be distributed by the Operator. These three items are: "Operating Equipment Purchased", "Initial Rehabilitation and Repairs", and "New Buildings, Improvements, etc." The reason for not distributing these items on a monthly basis is doubtless clear to the Operator, since such distribution might well overstate the cost for any one month or period short of the entire contract period.

Form MF-104A has been designed to tie in with Form MF-104 for both monthly and cumulative costs. The "Total Costs" on Form MF-104A for each month should equal the monthly "Total Costs" as reported on Form MF-104. This is also true of the "Total Costs To Date".

In preparing Form MF-104A, it will be necessary frequently to distribute certain costs over a number of items. For instance, supervisory and engineering costs may have to be distributed over several phases, such as, drifting, crosscutting, raising, etc., provided that these items were reported active for the month. Such distributions should be made on the basis of time spent on the various phases, on man days of labor charged to such phases, or on some other equitable basis. "Operating Equipment", "Initial Rehabilitation and Repairs", and "New Buildings Improvements, etc.", will be distributed to the several phases of the project by the Washington Office of DMEA at the close of the project if determined necessary. The last two columns headed "Authorized by Contract" will be filled in by the Operator if such information is found in the contract. This information is usually a part of Exhibit "A" of the contract. A space for remarks has been provided for the use of the Operator to call attention to any unusual circumstances causing excessive or disproportionate unit costs.

GPO 872894

CLAYTON SILVER MINES

Docket No. DMEA 4659
Contract No. Idm E-1108

NARRATIVE

Month of November 1958

The 800 North Drift was advanced 9.8 ft. to a point 95.5' northerly from 800 ℄ Station, The Mine Superintendent reports this advance "hit higher grade lead-zinc ore than found before " (October report).

The shaft bottom was cleaned out and sinking resumed, with an advance of 11.0' and one set of timber installed. The rock cut in this advance has been "streaked" with mineralization, and producing an abundance of water.

New installations during month:

1. A new 100 HP pump and motor on 500.
   This was necessary to take care of the increase of water flow from 800.

2. A 60 HP pump and motor on 800.

3. 3 - 45 KW transformers for 800 pumps.

4. 8" water column 500 to 800.

5. Electric cable, signal lines and light lines 500 to 800.

6. Moved sinking pumps to below 800.

Submitted by:

Norman M. Smith
General Manager

Form MF-104 (Rev.)
(April 1952)

Budget Bureau No. 42-R1036.5

RECEIVED NOV 28 1958 O.M.E.

UNITED STATES
DEPARTMENT OF THE INTERIOR
DEFENSE MINERALS EXPLORATION ADMINISTRATION
OPERATOR'S MONTHLY REPORT AND VOUCHER

Month of October, 1958 Docket No. DMEA 4659 Contract No. E-1108
Operator's Name Clayton Silver Mines Minerals Pb-Zn
Address Kellogg, Idaho
Contract Amount, $130,840 Government Participation: 50 % Amount, $65,420

ITEMS OF COSTS	FOR OPERATOR'S USE			FOR GOVERNMENT USE ONLY		
	Monthly Total	Totals Previously Reported	Totals To Date	Approved Monthly Total	Approved Totals Previously Reported	Approved Totals To Date
(1) Independent Short Form Contracts:						
Drilling						
~~Drifting~~ Excavation	2232.00	2108.00	4340.00	2232.00	248.00	2480.00
~~Crosscutting~~ 800 Station					1860.00	1860.00
Drifting	2566.23	1356.00	3922.23	2566.23	1356.00	3922.23
Shaft		39544.60	39544.60		39544.60	39544.60
(2) Labor and Supervision:						
Labor						
Supervision						
Technical Services	250.00	3000.00	3250.00	250.00	3000.00	3250.00
(3) Operating Mat'ls. and Supplies:						
Timber						
Explosives						
Pipe						
Track						
(4) Operating Equipment:						
Rental						
Purchase						
Depreciation						
(5) Initial Rehabilitation and Repairs						
(6) New Bldgs., Improvements, etc.						
(7) Miscellaneous:						
Repairs to Equipment						
Sampling and Analysis						
Payroll Taxes						
Liability Insurance						
(8) Contingencies (specify):						
TOTALS	5048.23	46008.60	51056.83	5048.23	46008.60	51056.83

I certify that the above bill is correct and just and that payment therefor has not been received.

Date 11/4/58 *Payee Clayton Silver Mines

Per [signature] Title General Manager

*When a voucher is signed or receipted in the name of a company or corporation, the name of the person writing the company or corporate name, as well as the capacity in which he signs, must appear. For example: "John Doe Company, per John Smith, Secretary," or "Treasurer," as the case may be.

NOTE.—Title 18, U. S. Code (Crimes), section 1001, makes it a criminal offense to make a willfully false statement or representation to any department or agency of the United States as to any matter within its jurisdiction.

(Instructions on reverse)

Pursuant to authority vested in me, I certify that this account is correct and proper for payment in the amount of:

$ 2524.12

Signature [signature]
(Authorized Certifying Officer)

Date 11/10/58 Vou. No. 2244

(See other side)

(For Government use only)

CERTIFICATION BY GOVERNMENT REPRESENTATIVE:

I certify that to the best of my knowledge and belief the contractor submitting this voucher is operating a Defense Minerals Exploration Administration project under Contract No. E 1108 in accordance with the terms of the contract.

Signature /s/ William M. Ponischer Title Mining Engr. Date 11/7/58

APPROVAL BY ~~DMEA~~ OME EXECUTIVE OFFICER OR ALTERNATE:

Signature /s/ A. E. Weissenborn Title Exec. Officer Date Nov 10, 1958

MONTHLY REPORT OF OPERATOR

The Operator (Contractor) of an exploration project is required to make a monthly report to the Government through the Regional Executive Officer. This report consists of three parts as follows:

(a) *Form MF-104—Operator's Monthly Report and Voucher.*—This form details expenditures and constitutes a voucher for reimbursing the Operator for the Government's share of costs;

(b) *Form MF-104A—Operator's Unit Cost and Progress Report.*—This is a statistical report of expenditures which shows costs for the various types of operation; and

(c) *Narrative.*—A concise narrative description of progress made, results accomplished, and any unusual difficulties encountered must be furnished as an attachment to this Report and Voucher. Wherever possible, the narrative is to be illustrated with maps or sketches showing formations penetrated and location and assays of samples taken as well as advances in workings. In the case of diamond drilling or churn drilling, the location and inclination of holes is to be shown on a map; logs and assays also are to be submitted.

The Monthly Report of Operator should be prepared in an original and four copies all of which must be sent to the Executive Officer of the Region not later than the 15th of the month following.

Preparation of Form MF-104—Operator's Monthly Report and Voucher.—All the applicable spaces in Form MF-104 should be filled in by the Operator, and the Operator or his agent should sign the certification in the lower left corner of the form.

The items of costs are arranged in the order they appear in Article 6 (a) of Form MF-200 (Revised February 1952), however, this form is readily adaptable for use in reporting activities under other contract forms.

Under Item (1) delete words "Short Form" if the contract is a sub-contract under Form MF-200; and delete word "Independent" if the contract reported is on Form MF-200 (A). Also, report work paid for on a unit basis under contract Form MF-200 as though it were performed under an independent contract.

Under Item (2) include labor, supervision and technical services incurred for the exploratory operations. Do not include labor, supervision and technical services used for work performed under items (5) and (6).

Under Item (3) include the costs of material and supplies used in the project other than that used under items (5) and (6).

Under Item (4) appear the three types of operating equipment expenditures, that is, rental, purchase and depreciation. The expenditures made for renting equipment belonging to a third party will be reported under "Rental". The amount paid or duly obligated for payment for the purchase of equipment will be reported under "Purchase". The amount of expenditures due the Operator to reimburse him for depreciation of equipment owned will be reported under "Depreciation".

Item (5) comprises costs of labor, supervision, technical services, materials, etc., which are used in the initial rehabilitation and repair of existing buildings, installations, fixtures, and equipment. These costs, therefore, should not be reported under items (2) and (3).

Item (6) includes the labor, supervision, technical services, materials, etc., used in the installation or construction of new buildings, fixed improvements, etc., necessary for the project. These costs, therefore, should not be reported under items (2) and (3).

Item (7) covers miscellaneous types of expenditure such as payroll taxes, liability insurance, workmen's compensation insurance, repairs to equipment and sampling and analysis. Only that part of payroll taxes, liability insurance and workmen's compensation which are paid by the operator should be reported under item (7). The share paid by the employee as a payroll deduction is to be included under item (2) as labor costs.

Item (8) includes any unforeseen costs not included in the other seven categories.

The original of Form MF-104 when submitted for reimbursable expenses incurred under contract Form MF-200 must be supported by original documentation or by certified copies of purchase orders, payrolls or transcripts of payrolls, unless such documentation has been waived by the Regional Executive Officer. This certification may be stated thus, "Certified True Copy (or Transcript)", followed by appropriate signature. If the Executive Officer of the Region determines that a contract under Form MF-200 should have an "on-site" audit, that is, a Government auditor should make an audit of the Operator's books and records of account, the Operator need not support his monthly voucher with original or certified documents except in cases of equipment purchases whose individual costs exceed $50.00. In these cases the original or a certified copy of the purchase order or invoice should be attached to the Monthly Voucher. N. B.—Only the *original* of Form MF-104 is required to be documented. The four copies of Form MF-104 are not to be thus supported.

Form MF-104 submitted for reimbursement under fixed price contracts on Form MF-200 (A), however, are not required to be supported by documentation of any kind. The Operator will submit his claim under item (1) of Form MF-104 by deleting as stated above the word "Independent" and by showing the number of feet or other units immediately after the appropriate descriptive word, such as, drilling, bulldozing, crosscutting, drifting, etc., and giving the "Monthly Total" amount due. "Totals Previously Reported", and "Totals to Date" columns should also be filled in.

Form MF-104A
(April 1952)

Budget Bureau No. 42-R1151.2

RECEIVED NOV 27 1958 O.M.E.

UNITED STATES
DEPARTMENT OF THE INTERIOR
DEFENSE MINERALS EXPLORATION ADMINISTRATION
OPERATOR'S UNIT COST AND PROGRESS REPORT

Month of Oct 1958 Docket No. DMEA 4659 Contract No. E-1108
Operator's Name Clayton Silver Mines Minerals Pb-Zn
Address Kellogg, Idaho

OPERATION	UNIT	COSTS THIS MONTH	UNITS THIS MONTH	COSTS TO DATE	UNITS TO DATE	UNIT COSTS TO DATE	AUTHORIZED BY CONTRACT Units	AUTHORIZED BY CONTRACT Unit Costs
Drifting	ft.	2566.23	76.7	3922.23	115.7	33.90	2150	$33.90
Crosscutting								
Raising								
Shafts	ft.			39544.60	265.4	$149.	300	$149.
Winzes								
Excavation Sta	cu. ft.			1860.00	3000	0.62	3000	0.62
Chute Pocket	cu. ft.					0.62	3000	0.62
Auger Sump	cu. ft.	2232.00	3600	2480.00	4000	0.62	4000	0.62
Stripping								
Trenching								
Test Pits								
Roads and Trails								
TOTAL DISTRIBUTED COSTS		4798.23		47806.83				TOTAL COSTS AUTHORIZED BY CONTRACT
Operating Equipment Purchased								
Initial Rehabilitation and Repairs								
New Buildings, Improvements, etc.								
Engineering		250.-		3250.-				5,750
TOTAL COSTS		5048.23		51056.83				130,640

The undersigned company, and the official executing this certification on its behalf, hereby certify that the information contained in this report is correct and complete to the best of their knowledge and belief.

Date 11/5/58 Operator Clayton Silver Mines

Per M M Smith Title General Manager

NOTE.—Title 18, U. S. Code (Crimes), section 1001, makes it a criminal offense to make a willfully false statement or representation to any department or agency of the United States as to any matter within its jurisdiction.

REMARKS: Total Pump & Sump Station Excavated 7288 cu ft.

(Instructions on reverse)

(For Government use only)

/s/ William M. Ronischer, 11/7/58

INSTRUCTIONS

Preparation of Form MF-104A—Operator's Unit Cost and Progress Report.—Applicable places on Form 104A should be filled in by the Operator. The purpose of this form is twofold as follows: (1) to furnish the supervising engineers and other administrators with statistical information necessary to better determine the progress of the project; and (2) to furnish more permanent information on mining costs for future use. The more important phases of operation on which permanent information is desired have been outlined in the form. There are blank lines, however, for those unusual phases which may need to be reported for a particular project. It will be necessary for the Operator to distribute his costs among the applicable phases reported with the exception of three items the costs of which are not to be distributed by the Operator. These three items are: "Operating Equipment Purchased", "Initial Rehabilitation and Repairs", and "New Buildings, Improvements, etc." The reason for not distributing these items on a monthly basis is doubtless clear to the Operator, since such distribution might well overstate the cost for any one month or period short of the entire contract period.

Form MF-104A has been designed to tie in with Form MF-104 for both monthly and cumulative costs. The "Total Costs" on Form MF-104A for each month should equal the monthly "Total Costs" as reported on Form MF-104. This is also true of the "Total Costs To Date".

In preparing Form MF-104A, it will be necessary frequently to distribute certain costs over a number of items. For instance, supervisory and engineering costs may have to be distributed over several phases, such as, drifting, crosscutting, raising, etc., provided that these items were reported active for the month. Such distributions should be made on the basis of time spent on the various phases, on man days of labor charged to such phases, or on some other equitable basis. "Operating Equipment", "Initial Rehabilitation and Repairs", and "New Buildings Improvements, etc.", will be distributed to the several phases of the project by the Washington Office of DMEA at the close of the project if determined necessary. The last two columns headed "Authorized by Contract" will be filled in by the Operator if such information is found in the contract. This information is usually a part of Exhibit "A" of the contract. A space for remarks has been provided for the use of the Operator to call attention to any unusual circumstances causing excessive or disproportionate unit costs.

GPO 872894

CLAYTON SILVER MINES

Docket No. DMEA 4659
Contract No. Idm E-1108

NARRATIVE

Month of October 1958

The 800 drift toward the north was advanced 75.7 feet to a point 85.7 feet northerly from the 800 ℄ station.

The temporary 800 pump station and sump were excavated and partially timbered by the end of the month.

Excavation of pump station amounted to 5,350 cu. ft. of rock removed.

Excavation of sump amounted to 1,938 cu. ft. of rock removed.

The north drift cut the South ore vein between points 65' and 71' N. 14° W. from 800 ℄ station. There occurs some galena mineralization across 4 feet of the vein but not sufficient to be ore.

An abundance of water flows from the South ore vein structure. It is estimated that the combined water flow from shaft and 800 workings is now approximately 400 gallons per minute.

Submitted by:

Norman M. Smith
General Manager

Form MF-104 (Rev.)
(April 1952)

Budget Bureau No. 42-R1036.5

RECEIVED OCT 27 1958 O.M.E.

UNITED STATES
DEPARTMENT OF THE INTERIOR
DEFENSE MINERALS EXPLORATION ADMINISTRATION
OPERATOR'S MONTHLY REPORT AND VOUCHER

Month of Aug & Sept, 1958 Docket No. DMEA 4559 Contract No. E-1108
Operator's Name Clayton Silver Mines Minerals Pb-Zn
Address Kellogg, Idaho
Contract Amount, $130,840 Government Participation: 50 % Amount, $65,420

ITEMS OF COSTS	FOR OPERATOR'S USE			FOR GOVERNMENT USE ONLY		
	Monthly Total	Totals Previously Reported	Totals To Date	Approved Monthly Total	Approved Totals Previously Reported	Approved Totals To Date
(1) Independent Short Form Contracts:						
Drilling						
~~Building~~ Sump Excavation	248.00	—	248.00	248.00	—	248.00
Crosscutting 800 Stq			1860.—		1860.00	1860.00
Drifting	1356.—	—	1356.00	1356.00	—	1356.00
Shaft			39,544.60		39544.60	39544.60
(2) Labor and Supervision:						
Labor						
Supervision						
Technical Services	250	2750	3000.—	250.00	2750.00	3000.00
(3) Operating Mat'ls. and Supplies:						
Timber						
Explosives						
Pipe						
Track						
(4) Operating Equipment:						
Rental						
Purchase						
Depreciation						
(5) Initial Rehabilitation and Repairs						
(6) New Bldgs., Improvements, etc.						
(7) Miscellaneous:						
Repairs to Equipment						
Sampling and Analysis						
Payroll Taxes						
Liability Insurance						
(8) Contingencies (specify):						
TOTALS	1854.00		46,008.60	1854.00	44154.60	46008.60

I certify that the above bill is correct and just and that payment therefor has not been received.

Date 10/8/58 *Payee Clayton Silver Mines

Per M M Smith Title General Manager

*When a voucher is signed or receipted in the name of a company or corporation, the name of the person writing the company or corporate name, as well as the capacity in which he signs, must appear. For example: "John Doe Company, per John Smith, Secretary," or "Treasurer," as the case may be.

NOTE.—Title 18, U. S. Code (Crimes), section 1001, makes it a criminal offense to make a willfully false statement or representation to any department or agency of the United States as to any matter within its jurisdiction.

(Instructions on reverse)

Pursuant to authority vested in me, I certify that this account is correct and proper for payment in the amount of:

$ 92700

Signature Dorothy F. Long
(Authorized Certifying Officer)

Date 10/17/58 Vou. No. 2234

(See other side)

(For Government use only)

CERTIFICATION BY GOVERNMENT REPRESENTATIVE:

I certify that to the best of my knowledge and belief the contractor submitting this voucher is operating a Defense Minerals Exploration Administration project under Contract No. E 1108 in accordance with the terms of the contract.

Signature /s/ William M. Pomeicher Title Mining Engr. Date 10/10/58

APPROVAL BY ~~DMEA~~ OME EXECUTIVE OFFICER OR ALTERNATE:

Signature /s/ A. E. Weissenborn Title Exec. Officer Date Oct. 14, 1958

MONTHLY REPORT OF OPERATOR

The Operator (Contractor) of an exploration project is required to make a monthly report to the Government through the Regional Executive Officer. This report consists of three parts as follows:

(a) *Form MF-104—Operator's Monthly Report and Voucher.*—This form details expenditures and constitutes a voucher for reimbursing the Operator for the Government's share of costs;

(b) *Form MF-104A—Operator's Unit Cost and Progress Report.*—This is a statistical report of expenditures which shows costs for the various types of operation; and

(c) *Narrative.*—A concise narrative description of progress made, results accomplished, and any unusual difficulties encountered must be furnished as an attachment to this Report and Voucher. Wherever possible, the narrative is to be illustrated with maps or sketches showing formations penetrated and location and assays of samples taken as well as advances in workings. In the case of diamond drilling or churn drilling, the location and inclination of holes is to be shown on a map; logs and assays also are to be submitted.

The Monthly Report of Operator should be prepared in an original and four copies all of which must be sent to the Executive Officer of the Region not later than the 15th of the month following.

Preparation of Form MF-104—Operator's Monthly Report and Voucher.—All the applicable spaces in Form MF-104 should be filled in by the Operator, and the Operator or his agent should sign the certification in the lower left corner of the form.

The items of costs are arranged in the order they appear in Article 6 (a) of Form MF-200 (Revised February 1952), however, this form is readily adaptable for use in reporting activities under other contract forms.

Under Item (1) delete words "Short Form" if the contract is a sub-contract under Form MF-200; and delete word "Independent" if the contract reported is on Form MF-200 (A). Also, report work paid for on a unit basis under contract Form MF-200 as though it were performed under an independent contract.

Under Item (2) include labor, supervision and technical services incurred for the exploratory operations. Do not include labor, supervision and technical services used for work performed under items (5) and (6).

Under Item (3) include the costs of material and supplies used in the project other than that used under items (5) and (6).

Under Item (4) appear the three types of operating equipment expenditures, that is, rental, purchase and depreciation. The expenditures made for renting equipment belonging to a third party will be reported under "Rental". The amount paid or duly obligated for payment for the purchase of equipment will be reported under "Purchase". The amount of expenditures due the Operator to reimburse him for depreciation of equipment owned will be reported under "Depreciation".

Item (5) comprises costs of labor, supervision, technical services, materials, etc., which are used in the initial rehabilitation and repair of existing buildings, installations, fixtures, and equipment. These costs, therefore, should not be reported under items (2) and (3).

Item (6) includes the labor, supervision, technical services, materials, etc., used in the installation or construction of new buildings, fixed improvements, etc., necessary for the project. These costs, therefore, should not be reported under items (2) and (3).

Item (7) covers miscellaneous types of expenditure such as payroll taxes, liability insurance, workmen's compensation insurance, repairs to equipment and sampling and analysis. Only that part of payroll taxes, liability insurance and workmen's compensation which are paid by the operator should be reported under item (7). The share paid by the employee as a payroll deduction is to be included under item (2) as labor costs.

Item (8) includes any unforeseen costs not included in the other seven categories.

The original of Form MF-104 when submitted for reimbursable expenses incurred under contract Form MF-200 must be supported by original documentation or by certified copies of purchase orders, payrolls or transcripts of payrolls, unless such documentation has been waived by the Regional Executive Officer. This certification may be stated thus, "Certified True Copy (or Transcript)", followed by appropriate signature. If the Executive Officer of the Region determines that a contract under Form MF-200 should have an "on-site" audit, that is, a Government auditor should make an audit of the Operator's books and records of account, the Operator need not support his monthly voucher with original or certified documents except in cases of equipment purchases whose individual costs exceed $50.00. In these cases the original or a certified copy of the purchase order or invoice should be attached to the Monthly Voucher. N. B.—Only the *original* of Form MF-104 is required to be documented. The four copies of Form MF-104 are not to be thus supported.

Form MF-104 submitted for reimbursement under fixed price contracts on Form MF-200 (A), however, are not required to be supported by documentation of any kind. The Operator will submit his claim under item (1) of Form MF-104 by deleting as stated above the word "Independent" and by showing the number of feet or other units immediately after the appropriate descriptive word, such as, drilling, bulldozing, crosscutting, drifting, etc., and giving the "Monthly Total" amount due. "Totals Previously Reported", and "Totals to Date" columns should also be filled in.

Form MF-104A
(April 1952)

Budget Bureau No. 42-R1151.2

UNITED STATES
DEPARTMENT OF THE INTERIOR

DEFENSE MINERALS EXPLORATION ADMINISTRATION

OPERATOR'S UNIT COST AND PROGRESS REPORT

Month of Aug & Sept 1958 Docket No. DMEA 4659 Contract No. E-1108
Operator's Name Clayton Silver Mines Minerals Pb-Zn
Address Kellogg, Idaho

OPERATION	Unit	Costs This Month	Units This Month	Costs to Date	Units to Date	Unit Costs to Date	Authorized by Contract: Units	Authorized by Contract: Unit Costs
Drifting	ft	1356.00	40.-	1356.00	40.	33.90	2150	33.90
Crosscutting								
Raising								
Shafts				39,544.60	265.4	$149.	300	$149.
Winzes								
Excavation ~~Bin Right Cole~~ Sta	cu ft			1860.00	3000	0.62	3000	0.62
~~Shaft~~ Pocket						0.62	3000	0.62
~~Winze~~ Sump	cu ft	248.00	400	248.00	400	0.62	4000	0.62
Stripping								
Trenching								
Test Pits								
Roads and Trails								
Total Distributed Costs		1604.00		43,008.60				Total Costs Authorized by Contract
Operating Equipment Purchased								
Initial Rehabilitation and Repairs								
New Buildings, Improvements, etc.								
Engineering		250.00		3000.-				5,750
Total Costs		1854.00		46,008.60				130,840

The undersigned company, and the official executing this certification on its behalf, hereby certify that the information contained in this report is correct and complete to the best of their knowledge and belief.

Date 10/8/58 Operator Clayton Silver Mines

Per M M Smith Title General Manager

NOTE.—Title 18, U. S. Code (Crimes), section 1001, makes it a criminal offense to make a willfully false statement or representation to any department or agency of the United States as to any matter within its jurisdiction.

Remarks:

(Instructions on reverse)

(For Government use only)

/s/ William M. Konieschke, 10/10/58

INSTRUCTIONS

Preparation of Form MF-104A—Operator's Unit Cost and Progress Report.—Applicable places on Form 104A should be filled in by the Operator. The purpose of this form is twofold as follows: (1) to furnish the supervising engineers and other administrators with statistical information necessary to better determine the progress of the project; and (2) to furnish more permanent information on mining costs for future use. The more important phases of operation on which permanent information is desired have been outlined in the form. There are blank lines, however, for those unusual phases which may need to be reported for a particular project. It will be necessary for the Operator to distribute his costs among the applicable phases reported with the exception of three items the costs of which are not to be distributed by the Operator. These three items are: "Operating Equipment Purchased", "Initial Rehabilitation and Repairs", and "New Buildings, Improvements, etc." The reason for not distributing these items on a monthly basis is doubtless clear to the Operator, since such distribution might well overstate the cost for any one month or period short of the entire contract period.

Form MF-104A has been designed to tie in with Form MF-104 for both monthly and cumulative costs. The "Total Costs" on Form MF-104A for each month should equal the monthly "Total Costs" as reported on Form MF-104. This is also true of the "Total Costs To Date".

In preparing Form MF-104A, it will be necessary frequently to distribute certain costs over a number of items. For instance, supervisory and engineering costs may have to be distributed over several phases, such as, drifting, crosscutting, raising, etc., provided that these items were reported active for the month. Such distributions should be made on the basis of time spent on the various phases, on man days of labor charged to such phases, or on some other equitable basis. "Operating Equipment", "Initial Rehabilitation and Repairs", and "New Buildings Improvements, etc.", will be distributed to the several phases of the project by the Washington Office of DMEA at the close of the project if determined necessary. The last two columns headed "Authorized by Contract" will be filled in by the Operator if such information is found in the contract. This information is usually a part of Exhibit "A" of the contract. A space for remarks has been provided for the use of the Operator to call attention to any unusual circumstances causing excessive or disproportionate unit costs.

GPO 872894

CLAYTON SILVER MINES

Docket No. DMEA 4659
Contract No. Idm E-1108

N A R R A T I V E

Month of September 1958

The Shaft and 800 Station were de-watered on September 23, 1958 (see Narrative for August 1958) and work began at that time.

The 800 South tail drift was advanced 35 feet, the North drift was advanced 5 feet.

Excavation for Sump (reservoir) amounted to 400 cu. ft.; an area 5' x 8' x 10' high.

The combined progress for August and September are shown on Form MF 104 A.

Submitted by:

Norman M. Smith
General Manager

10/6 CBM 100 800

CLAYTON SILVER MINES

Docket No. DMEA 4659
Contract No. Idm E-1108

NARRATIVE

Month of August 1958

Work was resumed on this project beginning the night shift of August 17.

Eight shifts were worked through August 25th driving the tail drift south from 800 station.

On the morning of the 26th, two shaft pump motors burned out. A third pump and motor was flooded at the 800 level. Water rose to the 700 before it could be held with available pumps. Two pumps from Wallace were rushed in but were inadequate for dewatering the shaft. The two burned motors were sent to Salt Lake for repair. At the end of August the project was standing, flooded to the 700 level. No measurements could be made for progress.

This progress will be combined with September's progress - if any.

As of this date, September 22, dewatering has not been accomplished.

Submitted by:

Norman M. Smith
General Manager

RECEIVED
BUREAU OF MINES
AUG 12 1958
SPOKANE, WASH.

EXTRA COPY
DMEA
RECEIVED AUG 25
DATE | INITIALS | CC
8/26 Com 100
800

CLAYTON SILVER MINES

Docket No. DMEA 4659
Contract No. Idm E-1108

NARRATIVE

Month of July 1958

The project, under Contract No. E-1108, was dormant during the month of July 1958. Reference is made to June's report concerning the blasting accident. The injuries of the crew members were more severe than was believed at first. To date, none is able to work. The Clayton management is making arrangements to obtain another crew and get its project underway sometime in August.

Because of no progress, Forms MF-104 and MF-104A have not been executed.

Submitted by:

Norman M. Smith
General Manager

Form MF-104 (Rev.)
(April 1952)

Budget Bureau No. 42-R1036.5

UNITED STATES
DEPARTMENT OF THE INTERIOR
DEFENSE MINERALS EXPLORATION ADMINISTRATION
OPERATOR'S MONTHLY REPORT AND VOUCHER

RECEIVED JUL 17 1958 D.M.E.A.

Month of June, 1958 Docket No. DMEA 4659 Contract No. E-1108
Operator's Name Clayton Silver Mines Minerals Pb-Zn
Address Kellogg, Idaho
Contract Amount, $ 130,840 Government Participation: 50% Amount, $ 65,420

ITEMS OF COSTS	FOR OPERATOR'S USE			FOR GOVERNMENT USE ONLY		
	Monthly Total	Totals Previously Reported	Totals To Date	Approved Monthly Total	Approved Totals Previously Reported	Approved Totals To Date
(1) Independent Short Form Contracts:						
Drilling						
~~Bulldozing~~ Excavation 800 Sq	341.—	1519.—	1860.—	341.00	1519.00	1860.00
Crosscutting						
Drifting						
Stuff	1713.50	37831.10	39,544.60	1713.50	37831.10	39544.60
(2) Labor and Supervision:						
Labor						
Supervision						
Technical Services	250.—	2500.—	2750.—	250.00	2500.00	2750.00
(3) Operating Mat'ls. and Supplies:						
Timber						
Explosives						
Pipe						
Track						
(4) Operating Equipment:						
Rental						
Purchase						
Depreciation						
(5) Initial Rehabilitation and Repairs						
(6) New Bldgs., Improvements, etc.						
(7) Miscellaneous:						
Repairs to Equipment						
Sampling and Analysis						
Payroll Taxes						
Liability Insurance						
(8) Contingencies (specify):						
TOTALS	2304.50	41,850.10	44,154.60	2304.50	41850.10	44154.60

I certify that the above bill is correct and just and that payment therefor has not been received.

Date 7/3/58 *Payee Clayton Silver Mines

Per M M Smith Title Gen. Mgr

*When a voucher is signed or receipted in the name of a company or corporation, the name of the person writing the company or corporate name, as well as the capacity in which he signs, must appear. For example: "John Doe Company, per John Smith, Secretary," or "Treasurer," as the case may be.

NOTE.—Title 18, U. S. Code (Crimes), section 1001, makes it a criminal offense to make a willfully false statement or representation to any department or agency of the United States as to any matter within its jurisdiction.

(Instructions on reverse)

Pursuant to authority vested in me, I certify that this account is correct and proper for payment in the amount of:

$ 1152.25

Signature Dorothy F. Long
(Authorized Certifying Officer)

Date 7/11/58 Vou. No. 2190

(See other side)

(For Government use only)

CERTIFICATION BY GOVERNMENT REPRESENTATIVE:

I certify that to the best of my knowledge and belief the contractor submitting this voucher is operating a Defense Minerals Exploration Administration project under Contract No. E 1108 in accordance with the terms of the contract.

Signature /s/ Stephen W. Goldsoke Title Min. Engr. Date 7-9-58

APPROVAL BY DMEA EXECUTIVE OFFICER OR ALTERNATE:

Signature /s/ A. E. Weissenborn Title Exec. Officer Date July 10, 1958

MONTHLY REPORT OF OPERATOR

The Operator (Contractor) of an exploration project is required to make a monthly report to the Government through the Regional Executive Officer. This report consists of three parts as follows:

(a) *Form MF-104—Operator's Monthly Report and Voucher.*—This form details expenditures and constitutes a voucher for reimbursing the Operator for the Government's share of costs;

(b) *Form MF-104A—Operator's Unit Cost and Progress Report.*—This is a statistical report of expenditures which shows costs for the various types of operation; and

(c) *Narrative.*—A concise narrative description of progress made, results accomplished, and any unusual difficulties encountered must be furnished as an attachment to this Report and Voucher. Wherever possible, the narrative is to be illustrated with maps or sketches showing formations penetrated and location and assays of samples taken as well as advances in workings. In the case of diamond drilling or churn drilling, the location and inclination of holes is to be shown on a map; logs and assays also are to be submitted.

The Monthly Report of Operator should be prepared in an original and four copies all of which must be sent to the Executive Officer of the Region not later than the 15th of the month following.

Preparation of Form MF-104—Operator's Monthly Report and Voucher.—All the applicable spaces in Form MF-104 should be filled in by the Operator, and the Operator or his agent should sign the certification in the lower left corner of the form.

The items of costs are arranged in the order they appear in Article 6 (a) of Form MF-200 (Revised February 1952), however, this form is readily adaptable for use in reporting activities under other contract forms.

Under Item (1) delete words "Short Form" if the contract is a sub-contract under Form MF-200; and delete word "Independent" if the contract reported is on Form MF-200 (A). Also, report work paid for on a unit basis under contract Form MF-200 as though it were performed under an independent contract.

Under Item (2) include labor, supervision and technical services incurred for the exploratory operations. Do not include labor, supervision and technical services used for work performed under items (5) and (6).

Under Item (3) include the costs of material and supplies used in the project other than that used under items (5) and (6).

Under Item (4) appear the three types of operating equipment expenditures, that is, rental, purchase and depreciation. The expenditures made for renting equipment belonging to a third party will be reported under "Rental". The amount paid or duly obligated for payment for the purchase of equipment will be reported under "Purchase". The amount of expenditures due the Operator to reimburse him for depreciation of equipment owned will be reported under "Depreciation".

Item (5) comprises costs of labor, supervision, technical services, materials, etc., which are used in the initial rehabilitation and repair of existing buildings, installations, fixtures, and equipment. These costs, therefore, should not be reported under items (2) and (3).

Item (6) includes the labor, supervision, technical services, materials, etc., used in the installation or construction of new buildings, fixed improvements, etc., necessary for the project. These costs, therefore, should not be reported under items (2) and (3).

Item (7) covers miscellaneous types of expenditure such as payroll taxes, liability insurance, workmen's compensation insurance, repairs to equipment and sampling and analysis. Only that part of payroll taxes, liability insurance and workmen's compensation which are paid by the operator should be reported under item (7). The share paid by the employee as a payroll deduction is to be included under item (2) as labor costs.

Item (8) includes any unforeseen costs not included in the other seven categories.

The original of Form MF-104 when submitted for reimbursable expenses incurred under contract Form MF-200 must be supported by original documentation or by certified copies of purchase orders, payrolls or transcripts of payrolls, unless such documentation has been waived by the Regional Executive Officer. This certification may be stated thus, "Certified True Copy (or Transcript)", followed by appropriate signature. If the Executive Officer of the Region determines that a contract under Form MF-200 should have an "on-site" audit, that is, a Government auditor should make an audit of the Operator's books and records of account, the Operator need not support his monthly voucher with original or certified documents except in cases of equipment purchases whose individual costs exceed $50.00. In these cases the original or a certified copy of the purchase order or invoice should be attached to the Monthly Voucher. N. B.—Only the *original* of Form MF-104 is required to be documented. The four copies of Form MF-104 are not to be thus supported.

Form MF-104 submitted for reimbursement under fixed price contracts on Form MF-200 (A), however, are not required to be supported by documentation of any kind. The Operator will submit his claim under item (1) of Form MF-104 by deleting as stated above the word "Independent" and by showing the number of feet or other units immediately after the appropriate descriptive word, such as, drilling, bulldozing, crosscutting, drifting, etc., and giving the "Monthly Total" amount due. "Totals Previously Reported", and "Totals to Date" columns should also be filled in.

Form 3IF-104A
(April 1962)

Budget Bureau No. 42-R1151.2

UNITED STATES
DEPARTMENT OF THE INTERIOR
DEFENSE MINERALS EXPLORATION ADMINISTRATION

RECEIVED JUL 3 1958 D.M.E.A.

OPERATOR'S UNIT COST AND PROGRESS REPORT

Month of June 1958 Docket No. DMEA 4659 Contract No. E-1108
Operator's Name Clayton Silver Mines Minerals Pb-Zn
Address Kellogg, Idaho

OPERATION	Unit	Costs This Month	Units This Month	Costs to Date	Units to Date	Unit Costs to Date	Authorized by Contract: Units	Authorized by Contract: Unit Costs
Drifting								
Crosscutting								
Raising								
Shafts	ft	1713.50	11.5	39,544.60	265.4	$149.	300	$149.
Winzes								
Drilling: Core								
Churn								
Auger								
Stripping								
Trenching								
Test Pits								
Roads and Trails								
Excavation 800 Sta	cu. ft.	341.–	550*	1,860.–	3000	$0.62	10,000	$0.62
Total Distributed Costs		2064.50		41,404.60				Total Costs Authorized by Contract
Operating Equipment Purchased								
Initial Rehabilitation and Repairs								
New Buildings, Improvements, etc.								
Engineering		250.–		2750.–				5,750
Total Costs		2304.50		44,154.60				~~130,840~~

The undersigned company, and the official executing this certification on its behalf, hereby certify that the information contained in this report is correct and complete to the best of their knowledge and belief.

Date 7/3/58 Operator Clayton Silver Mines
Per [signature] Title General Manager

Remarks: * 800 Sta total excavated = 600 cu ft but total contract calls for only 3000 cu ft

NOTE.—Title 18, U. S. Code (Crimes), section 1001, makes it a criminal offense to make a willfully false statement or representation to any department or agency of the United States as to any matter within its jurisdiction.

(Instructions on reverse)

(For Government use only)

7-9-58
/s/ Stephen W. Zollock
Mining Engr.

INSTRUCTIONS

Preparation of Form MF-104A—Operator's Unit Cost and Progress Report.—Applicable places on Form 104A should be filled in by the Operator. The purpose of this form is twofold as follows: (1) to furnish the supervising engineers and other administrators with statistical information necessary to better determine the progress of the project; and (2) to furnish more permanent information on mining costs for future use. The more important phases of operation on which permanent information is desired have been outlined in the form. There are blank lines, however, for those unusual phases which may need to be reported for a particular project. It will be necessary for the Operator to distribute his costs among the applicable phases reported with the exception of three items the costs of which are not to be distributed by the Operator. These three items are: "Operating Equipment Purchased", "Initial Rehabilitation and Repairs", and "New Buildings, Improvements, etc." The reason for not distributing these items on a monthly basis is doubtless clear to the Operator, since such distribution might well overstate the cost for any one month or period short of the entire contract period.

Form MF-104A has been designed to tie in with Form MF-104 for both monthly and cumulative costs. The "Total Costs" on Form MF-104A for each month should equal the monthly "Total Costs" as reported on Form MF-104. This is also true of the "Total Costs To Date".

In preparing Form MF-104A, it will be necessary frequently to distribute certain costs over a number of items. For instance, supervisory and engineering costs may have to be distributed over several phases, such as, drifting, crosscutting, raising, etc., provided that these items were reported active for the month. Such distributions should be made on the basis of time spent on the various phases, on man days of labor charged to such phases, or on some other equitable basis. "Operating Equipment", "Initial Rehabilitation and Repairs", and "New Buildings Improvements, etc.", will be distributed to the several phases of the project by the Washington Office of DMEA at the close of the project if determined necessary. The last two columns headed "Authorized by Contract" will be filled in by the Operator if such information is found in the contract. This information is usually a part of Exhibit "A" of the contract. A space for remarks has been provided for the use of the Operator to call attention to any unusual circumstances causing excessive or disproportionate unit costs.

GPO 872894

CLAYTON SILVER MINES

Docket No. DMEA 4659
Contract No. Idm E-1108

NARRATIVE

Month of June 1958

The Clayton shaft was sunk during the month of June 1958 a distance of 11.5 feet from a point 335.9 ft. to 347.4 ft. below the 500 sill. Near this bottom a large flow of water was encountered when a mineralized fault was cut. The amount of water is too great to handle with the present head of 347 feet and sink at the same time. Plans were consequently changed to finish cutting the 800-level station, drift northward and establish a temporary pumping reservoir and station. New 60 HP pumps will be installed in the pumping station to pump to the 500. On completion of this installation, the shaft sinking will be resumed.

The 800 station was advanced one round eastward for a distance of 6 feet, excavating a volume 10' x 10' x 6' or 600 cu. ft. On blasting this round the night of June 16 one charge exploded prematurely, injuring all three men of the sinking crew. They are now recovering and probably will return to work around July 10. In the meantime the project is down.

Submitted by:

Norman M. Smith

Norman M. Smith
General Manager

Form [illegible]-104 (Rev.)
(April 1952)

Budget Bureau No. 42-R1036.5

UNITED STATES
DEPARTMENT OF THE INTERIOR
DEFENSE MINERALS EXPLORATION ADMINISTRATION
OPERATOR'S MONTHLY REPORT AND VOUCHER

RECEIVED JUN 10 1958

Month of 1st May, 1958 Docket No. DMEA 4659 Contract No. E-1108
Operator's Name Clayton Silver Mines Minerals Pb - Zn
Address Kellogg, Idaho
Contract Amount, $ 130,840 Government Participation: 50 % Amount, $ 65,420

ITEMS OF COSTS	FOR OPERATOR'S USE			FOR GOVERNMENT USE ONLY		
	Monthly Total	Totals Previously Reported	Totals To Date	Approved Monthly Total	Approved Totals Previously Reported	Approved Totals To Date
(1) Independent Short Form Contracts:						
Drilling						
~~Bulldozing~~ Excavation	1519.—	none	1519.—	1519.00	—	1519.00
Crosscutting						
Drifting						
Shaft	1639.—	36,192.10	37831.10	1639.00	36192.10	37831.10
(2) Labor and Supervision:						
Labor						
Supervision						
Technical Services	250.—	2250.—	2500.—	250.00	2250.00	2500.00
(3) Operating Mat'ls. and Supplies:						
Timber						
Explosives						
Pipe						
Track						
(4) Operating Equipment:						
Rental						
Purchase						
Depreciation						
(5) Initial Rehabilitation and Repairs						
(6) New Bldgs., Improvements, etc.						
(7) Miscellaneous:						
Repairs to Equipment						
Sampling and Analysis						
Payroll Taxes						
Liability Insurance						
(8) Contingencies (specify):						
TOTALS	3408.00	38442.10	41,850.10	3408.00	38442.10	41850.10

I certify that the above bill is correct and just and that payment therefor has not been received.

Date 6/10/58 *Payee Clayton Silver Mines

Per [signature] Title Gen Mgr

*When a voucher is signed or receipted in the name of a company or corporation, the name of the person writing the company or corporate name, as well as the capacity in which he signs, must appear. For example: "John Doe Company, per John Smith, Secretary," or "Treasurer," as the case may be.

NOTE.—Title 18, U. S. Code (Crimes), section 1001, makes it a criminal offense to make a willfully false statement or representation to any department or agency of the United States as to any matter within its jurisdiction.

(Instructions on reverse)

Pursuant to authority vested in me, I certify that this account is correct and proper for payment in the amount of:

$ 1704.00

Signature Dorothy F. Long
(Authorized Certifying Officer)

Date 7-3-58 Vou. No. 2185

(See other side)

(For Government use only)

CERTIFICATION BY GOVERNMENT REPRESENTATIVE:

I certify that to the best of my knowledge and belief the contractor submitting this voucher is operating a Defense Minerals Exploration Administration project under Contract No. 61108 in accordance with the terms of the contract.

Signature /s/ William M. Konicka Title Mining Engr. Date 6/17/58

APPROVAL BY DMEA EXECUTIVE OFFICER OR ALTERNATE:

Signature /s/ Wing L. Agnew Title Acting Exec Date 7-2-58

MONTHLY REPORT OF OPERATOR

The Operator (Contractor) of an exploration project is required to make a monthly report to the Government through the Regional Executive Officer. This report consists of three parts as follows:

(a) *Form MF-104—Operator's Monthly Report and Voucher.*—This form details expenditures and constitutes a voucher for reimbursing the Operator for the Government's share of costs;

(b) *Form MF-104A—Operator's Unit Cost and Progress Report.*—This is a statistical report of expenditures which shows costs for the various types of operation; and

(c) *Narrative.*—A concise narrative description of progress made, results accomplished, and any unusual difficulties encountered must be furnished as an attachment to this Report and Voucher. Wherever possible, the narrative is to be illustrated with maps or sketches showing formations penetrated and location and assays of samples taken as well as advances in workings. In the case of diamond drilling or churn drilling, the location and inclination of holes is to be shown on a map; logs and assays also are to be submitted.

The Monthly Report of Operator should be prepared in an original and four copies all of which must be sent to the Executive Officer of the Region not later than the 15th of the month following.

Preparation of Form MF-104—Operator's Monthly Report and Voucher.—All the applicable spaces in Form MF-104 should be filled in by the Operator, and the Operator or his agent should sign the certification in the lower left corner of the form.

The items of costs are arranged in the order they appear in Article 6 (a) of Form MF-200 (Revised February 1952), however, this form is readily adaptable for use in reporting activities under other contract forms.

Under Item (1) delete words "Short Form" if the contract is a sub-contract under Form MF-200; and delete word "Independent" if the contract reported is on Form MF-200 (A). Also, report work paid for on a unit basis under contract Form MF-200 as though it were performed under an independent contract.

Under Item (2) include labor, supervision and technical services incurred for the exploratory operations. Do not include labor, supervision and technical services used for work performed under items (5) and (6).

Under Item (3) include the costs of material and supplies used in the project other than that used under items (5) and (6).

Under Item (4) appear the three types of operating equipment expenditures, that is, rental, purchase and depreciation. The expenditures made for renting equipment belonging to a third party will be reported under "Rental". The amount paid or duly obligated for payment for the purchase of equipment will be reported under "Purchase". The amount of expenditures due the Operator to reimburse him for depreciation of equipment owned will be reported under "Depreciation".

Item (5) comprises costs of labor, supervision, technical services, materials, etc., which are used in the initial rehabilitation and repair of existing buildings, installations, fixtures, and equipment. These costs, therefore, should not be reported under items (2) and (3).

Item (6) includes the labor, supervision, technical services, materials, etc., used in the installation or construction of new buildings, fixed improvements, etc., necessary for the project. These costs, therefore, should not be reported under items (2) and (3).

Item (7) covers miscellaneous types of expenditure such as payroll taxes, liability insurance, workmen's compensation insurance, repairs to equipment and sampling and analysis. Only that part of payroll taxes, liability insurance and workmen's compensation which are paid by the operator should be reported under item (7). The share paid by the employee as a payroll deduction is to be included under item (2) as labor costs.

Item (8) includes any unforeseen costs not included in the other seven categories.

The original of Form MF-104 when submitted for reimbursable expenses incurred under contract Form MF-200 must be supported by original documentation or by certified copies of purchase orders, payrolls or transcripts of payrolls, unless such documentation has been waived by the Regional Executive Officer. This certification may be stated thus, "Certified True Copy (or Transcript)", followed by appropriate signature. If the Executive Officer of the Region determines that a contract under Form MF-200 should have an "on-site" audit, that is, a Government auditor should make an audit of the Operator's books and records of account, the Operator need not support his monthly voucher with original or certified documents except in cases of equipment purchases whose individual costs exceed $50.00. In these cases the original or a certified copy of the purchase order or invoice should be attached to the Monthly Voucher. N. B.—Only the *original* of Form MF-104 is required to be documented. The four copies of Form MF-104 are not to be thus supported.

Form MF-104 submitted for reimbursement under fixed price contracts on Form MF-200 (A), however, are not required to be supported by documentation of any kind. The Operator will submit his claim under item (1) of Form MF-104 by deleting as stated above the word "Independent" and by showing the number of feet or other units immediately after the appropriate descriptive word, such as, drilling, bulldozing, crosscutting, drifting, etc., and giving the "Monthly Total" amount due. "Totals Previously Reported", and "Totals to Date" columns should also be filled in.

Form MF-104A
(April 1952)

Budget Bureau No. 42-R1151.2

UNITED STATES
DEPARTMENT OF THE INTERIOR
DEFENSE MINERALS EXPLORATION ADMINISTRATION

RECEIVED JUL 10 1958 D.M.E.A.

OPERATOR'S UNIT COST AND PROGRESS REPORT

Month of 5/14 195 8 Docket No. DMEA 4659 Contract No. E-1108

Operator's Name Clayton Silver Mines Minerals Pb - Zn

Address Kellogg, Idaho

OPERATION	Unit	Costs This Month	Units This Month	Costs to Date	Units to Date	Unit Costs to Date	Authorized by Contract: Units	Authorized by Contract: Unit Costs
Drifting								
Crosscutting								
Raising								
Shafts	ft	1639.-	11.0	37,831.10	253.9	$149.	300	$149.
Winzes								
Drilling: Core								
Churn								
Auger								
Stripping								
Trenching								
Test Pits								
Roads and Trails								
Excavation	cu. ft.	1519.-	2450	1519.00	2450	$0.62	10,000	$0.62
Total Distributed Costs		3158.00		39 350.10				Total Costs Authorized by Contract
Operating Equipment Purchased								
Initial Rehabilitation and Repairs								
New Buildings, Improvements, etc.								
Engineering		250.-		2 500.-				5,750
Total Costs		3408.-		41,850.10				130,840

The undersigned company, and the official executing this certification on its behalf, hereby certify that the information contained in this report is correct and complete to the best of their knowledge and belief.

Date 6/10/58 Operator Clayton Silver Mines

Per [signature] Title General Manager

NOTE.—Title 18, U. S. Code (Crimes), section 1001, makes it a criminal offense to make a willfully false statement or representation to any department or agency of the United States as to any matter within its jurisdiction.

Remarks:

(Instructions on reverse)

(For Government use only)

William M. Bomischer, Min. Engr.
6/17/58

INSTRUCTIONS

Preparation of Form MF-104A—Operator's Unit Cost and Progress Report.—Applicable places on Form 104A should be filled in by the Operator. The purpose of this form is twofold as follows: (1) to furnish the supervising engineers and other administrators with statistical information necessary to better determine the progress of the project; and (2) to furnish more permanent information on mining costs for future use. The more important phases of operation on which permanent information is desired have been outlined in the form. There are blank lines, however, for those unusual phases which may need to be reported for a particular project. It will be necessary for the Operator to distribute his costs among the applicable phases reported with the exception of three items the costs of which are not to be distributed by the Operator. These three items are: "Operating Equipment Purchased", "Initial Rehabilitation and Repairs", and "New Buildings, Improvements, etc." The reason for not distributing these items on a monthly basis is doubtless clear to the Operator, since such distribution might well overstate the cost for any one month or period short of the entire contract period.

Form MF-104A has been designed to tie in with Form MF-104 for both monthly and cumulative costs. The "Total Costs" on Form MF-104A for each month should equal the monthly "Total Costs" as reported on Form MF-104. This is also true of the "Total Costs To Date".

In preparing Form MF-104A, it will be necessary frequently to distribute certain costs over a number of items. For instance, supervisory and engineering costs may have to be distributed over several phases, such as, drifting, crosscutting, raising, etc., provided that these items were reported active for the month. Such distributions should be made on the basis of time spent on the various phases, on man days of labor charged to such phases, or on some other equitable basis. "Operating Equipment", "Initial Rehabilitation and Repairs", and "New Buildings Improvements, etc.", will be distributed to the several phases of the project by the Washington Office of DMEA at the close of the project if determined necessary. The last two columns headed "Authorized by Contract" will be filled in by the Operator if such information is found in the contract. This information is usually a part of Exhibit "A" of the contract. A space for remarks has been provided for the use of the Operator to call attention to any unusual circumstances causing excessive or disproportionate unit costs.

GPO 872894

CLAYTON SILVER MINES

Docket No. DMEA 4659
Contract No. Idm E-1108

NARRATIVE

Month of May 1958

The Clayton shaft was sunk during the month of May 1958 a distance of 11.0 feet from a point 324.9 ft. to 335.9 ft. below the 500 sill.

Part of the 800 station was excavated.

(a) average height 11.0' x 10' wide x 15' = 1650 cu. ft.
(b) average height 10.0' x 10' wide x 8' = 800 cu. ft.

Total cu. ft. exeavated on 800 station 2450

Submitted by:

Norman M. Smith
General Manager

Form MF-104 (Rev.)
(April 1952)

Budget Bureau No. 42-R1036.5

RECEIVED MAY 19 1958

UNITED STATES
DEPARTMENT OF THE INTERIOR
DEFENSE MINERALS EXPLORATION ADMINISTRATION
OPERATOR'S MONTHLY REPORT AND VOUCHER

Month of April, 1958 Docket No. DMEA 4659 Contract No. E-1108
Operator's Name Clayton Silver Mines Minerals Pb - Zn
Address Kellogg, Idaho
Contract Amount, $130,840 Government Participation: 50% Amount, $65,420

ITEMS OF COSTS	FOR OPERATOR'S USE			FOR GOVERNMENT USE ONLY		
	Monthly Total	Totals Previously Reported	Totals To Date	Approved Monthly Total	Approved Totals Previously Reported	Approved Totals To Date
(1) Independent Short Form Contracts:						
Drilling						
Bulldozing						
Crosscutting						
Drifting						
Stoping	2086.00	34,106.10	36,192.10	2086.00	34,106.10	36,192.10
(2) Labor and Supervision:						
Labor						
Supervision						
Technical Services	250.00	2,000.00	2250.00	250.00	2,000.00	2250.00
(3) Operating Mat'ls. and Supplies:						
Timber						
Explosives						
Pipe						
Track						
(4) Operating Equipment:						
Rental						
Purchase						
Depreciation						
(5) Initial Rehabilitation and Repairs						
(6) New Bldgs., Improvements, etc.						
(7) Miscellaneous:						
Repairs to Equipment						
Sampling and Analysis						
Payroll Taxes						
Liability Insurance						
(8) Contingencies (specify):						
TOTALS	2336.00	36,106.10	38,442.10	2336.00	36,106.10	38442.10

I certify that the above bill is correct and just and that payment therefor has not been received.

Date 5/5/58 *Payee Clayton Silver Mines

Per [signature] Title Gen Mgr.

*When a voucher is signed or receipted in the name of a company or corporation, the name of the person writing the company or corporate name, as well as the capacity in which he signs, must appear. For example: "John Doe Company, per John Smith, Secretary," or "Treasurer," as the case may be.

NOTE.—Title 18, U. S. Code (Crimes), section 1001, makes it a criminal offense to make a willfully false statement or representation to any department or agency of the United States as to any matter within its jurisdiction.

(Instructions on reverse)

Pursuant to authority vested in me, I certify that this account is correct and proper for payment in the amount of:

$1168.00

Signature [signature]
(Authorized Certifying Officer)

Date 5/14/58 Vou. No. 2159
(See other side)

(For Government use only)

CERTIFICATION BY GOVERNMENT REPRESENTATIVE:

I certify that to the best of my knowledge and belief the contractor submitting this voucher is operating a Defense Minerals Exploration Administration project under Contract No. E 1108 in accordance with the terms of the contract.

Signature /s/ William M. Romaecher Title Mining Engr. Date 5/12/58

APPROVAL BY DMEA EXECUTIVE OFFICER OR ALTERNATE:

Signature /s/ A. E. Weissenborn Title Exec. Officer Date May 13, 1958

MONTHLY REPORT OF OPERATOR

The Operator (Contractor) of an exploration project is required to make a monthly report to the Government through the Regional Executive Officer. This report consists of three parts as follows:

(a) *Form MF-104—Operator's Monthly Report and Voucher.*—This form details expenditures and constitutes a voucher for reimbursing the Operator for the Government's share of costs;

(b) *Form MF-104A—Operator's Unit Cost and Progress Report.*—This is a statistical report of expenditures which shows costs for the various types of operation; and

(c) *Narrative.*—A concise narrative description of progress made, results accomplished, and any unusual difficulties encountered must be furnished as an attachment to this Report and Voucher. Wherever possible, the narrative is to be illustrated with maps or sketches showing formations penetrated and location and assays of samples taken as well as advances in workings. In the case of diamond drilling or churn drilling, the location and inclination of holes is to be shown on a map; logs and assays also are to be submitted.

The Monthly Report of Operator should be prepared in an original and four copies all of which must be sent to the Executive Officer of the Region not later than the 15th of the month following.

Preparation of Form MF-104—Operator's Monthly Report and Voucher.—All the applicable spaces in Form MF-104 should be filled in by the Operator, and the Operator or his agent should sign the certification in the lower left corner of the form.

The items of costs are arranged in the order they appear in Article 6 (a) of Form MF-200 (Revised February 1952), however, this form is readily adaptable for use in reporting activities under other contract forms.

Under Item (1) delete words "Short Form" if the contract is a sub-contract under Form MF-200; and delete word "Independent" if the contract reported is on Form MF-200 (A). Also, report work paid for on a unit basis under contract Form MF-200 as though it were performed under an independent contract.

Under Item (2) include labor, supervision and technical services incurred for the exploratory operations. Do not include labor, supervision and technical services used for work performed under items (5) and (6).

Under Item (3) include the costs of material and supplies used in the project other than that used under items (5) and (6).

Under Item (4) appear the three types of operating equipment expenditures, that is, rental, purchase and depreciation. The expenditures made for renting equipment belonging to a third party will be reported under "Rental". The amount paid or duly obligated for payment for the purchase of equipment will be reported under "Purchase". The amount of expenditures due the Operator to reimburse him for depreciation of equipment owned will be reported under "Depreciation".

Item (5) comprises costs of labor, supervision, technical services, materials, etc., which are used in the initial rehabilitation and repair of existing buildings, installations, fixtures, and equipment. These costs, therefore, should not be reported under items (2) and (3).

Item (6) includes the labor, supervision, technical services, materials, etc., used in the installation or construction of new buildings, fixed improvements, etc., necessary for the project. These costs, therefore, should not be reported under items (2) and (3).

Item (7) covers miscellaneous types of expenditure such as payroll taxes, liability insurance, workmen's compensation insurance, repairs to equipment and sampling and analysis. Only that part of payroll taxes, liability insurance and workmen's compensation which are paid by the operator should be reported under item (7). The share paid by the employee as a payroll deduction is to be included under item (2) as labor costs.

Item (8) includes any unforeseen costs not included in the other seven categories.

The original of Form MF-104 when submitted for reimbursable expenses incurred under contract Form MF-200 must be supported by original documentation or by certified copies of purchase orders, payrolls or transcripts of payrolls, unless such documentation has been waived by the Regional Executive Officer. This certification may be stated thus, "Certified True Copy (or Transcript)", followed by appropriate signature. If the Executive Officer of the Region determines that a contract under Form MF-200 should have an "on-site" audit, that is, a Government auditor should make an audit of the Operator's books and records of account, the Operator need not support his monthly voucher with original or certified documents except in cases of equipment purchases whose individual costs exceed $50.00. In these cases the original or a certified copy of the purchase order or invoice should be attached to the Monthly Voucher. N. B.—Only the *original* of Form MF-104 is required to be documented. The four copies of Form MF-104 are not to be thus supported.

Form MF-104 submitted for reimbursement under fixed price contracts on Form MF-200 (A), however, are not required to be supported by documentation of any kind. The Operator will submit his claim under item (1) of Form MF-104 by deleting as stated above the word "Independent" and by showing the number of feet or other units immediately after the appropriate descriptive word, such as, drilling, bulldozing, crosscutting, drifting, etc., and giving the "Monthly Total" amount due. "Totals Previously Reported", and "Totals to Date" columns should also be filled in.

Form MF-104A
(April 1962)

Budget Bureau No. 42-R1151.2

UNITED STATES
DEPARTMENT OF THE INTERIOR
DEFENSE MINERALS EXPLORATION ADMINISTRATION
OPERATOR'S UNIT COST AND PROGRESS REPORT

Month of April 1958 Docket No. DMEA 4659 Contract No. E-1108
Operator's Name Clayton Silver Mines Minerals Pb-Zn
Address Kellogg, Idaho

OPERATION	UNIT	COSTS THIS MONTH	UNITS THIS MONTH	COSTS TO DATE	UNITS TO DATE	UNIT COSTS TO DATE	AUTHORIZED BY CONTRACT	
							Units	Unit Costs
Drifting								
Crosscutting								
Raising								
Shafts	FT	2086.-	14.0	36,192.10	242.9	$149.	300	$149.
Winzes								
Drilling: Core								
Churn								
Auger								
Stripping								
Trenching								
Test Pits								
Roads and Trails								
TOTAL DISTRIBUTED COSTS		2086.-		36,192.10				TOTAL COSTS AUTHORIZED BY CONTRACT
Operating Equipment Purchased								
Initial Rehabilitation and Repairs								
New Buildings, Improvements, etc.								
Engineering		250		2,250.				5,750
TOTAL COSTS		2,336.		38,442.10				130,840

The undersigned company, and the official executing this certification on its behalf, hereby certify that the information contained in this report is correct and complete to the best of their knowledge and belief.

Date 5/5/58 Operator Clayton Silver Mines

Per M. M. Smith Title Gen. Mgr.

NOTE.—Title 18, U. S. Code (Crimes), section 1001, makes it a criminal offense to make a willfully false statement or representation to any department or agency of the United States as to any matter within its jurisdiction.

REMARKS:

(Instructions on reverse)

(For Government use only)

/s/ William M. Romeiser, Mining Engr.
5/12/58

INSTRUCTIONS

Preparation of Form MF-104A—Operator's Unit Cost and Progress Report.—Applicable places on Form 104A should be filled in by the Operator. The purpose of this form is twofold as follows: (1) to furnish the supervising engineers and other administrators with statistical information necessary to better determine the progress of the project; and (2) to furnish more permanent information on mining costs for future use. The more important phases of operation on which permanent information is desired have been outlined in the form. There are blank lines, however, for those unusual phases which may need to be reported for a particular project. It will be necessary for the Operator to distribute his costs among the applicable phases reported with the exception of three items the costs of which are not to be distributed by the Operator. These three items are: "Operating Equipment Purchased", "Initial Rehabilitation and Repairs", and "New Buildings, Improvements, etc." The reason for not distributing these items on a monthly basis is doubtless clear to the Operator, since such distribution might well overstate the cost for any one month or period short of the entire contract period.

Form MF-104A has been designed to tie in with Form MF-104 for both monthly and cumulative costs. The "Total Costs" on Form MF-104A for each month should equal the monthly "Total Costs" as reported on Form MF-104. This is also true of the "Total Costs To Date".

In preparing Form MF-104A, it will be necessary frequently to distribute certain costs over a number of items. For instance, supervisory and engineering costs may have to be distributed over several phases, such as, drifting, crosscutting, raising, etc., provided that these items were reported active for the month. Such distributions should be made on the basis of time spent on the various phases, on man days of labor charged to such phases, or on some other equitable basis. "Operating Equipment", "Initial Rehabilitation and Repairs", and "New Buildings Improvements, etc.", will be distributed to the several phases of the project by the Washington Office of DMEA at the close of the project if determined necessary. The last two columns headed "Authorized by Contract" will be filled in by the Operator if such information is found in the contract. This information is usually a part of Exhibit "A" of the contract. A space for remarks has been provided for the use of the Operator to call attention to any unusual circumstances causing excessive or disproportionate unit costs.

GPO 872894

CLAYTON SILVER MINES

Docket No. DMEA 4659
Contract No. Idm E-1108

NARRATIVE

Month of April 1958

The Clayton shaft was sunk during the month of April 1958 a distance of 14.0 feet from a point 310.9 ft. to 324.9 ft. below the 500 sill.

Two regular shaft sets and the 800-station set were installed. Timbering in shaft by the end of the month included 2 sets below 800 sill.

The project was shut down for eight (8) days due to broken hoist.

Submitted by:

Norman M. Smith
General Manager

Form MF-104 (Rev.)
(April 1952)

Budget Bureau No. 42-R1036.5

RECEIVED Apr 14 1958 D.M.E.A.

UNITED STATES
DEPARTMENT OF THE INTERIOR
DEFENSE MINERALS EXPLORATION ADMINISTRATION
OPERATOR'S MONTHLY REPORT AND VOUCHER

Month of March, 1958 Docket No. DMEA 4659 Contract No. E-1108
Operator's Name Clayton Silver Mines Minerals Pb - Zn
Address Kellogg, Idaho
Contract Amount, $ 130,840 Government Participation: 50% Amount, $ 65,420

ITEMS OF COSTS	FOR OPERATOR'S USE			FOR GOVERNMENT USE ONLY		
	Monthly Total	Totals Previously Reported	Totals To Date	Approved Monthly Total	Approved Totals Previously Reported	Approved Totals To Date
(1) Independent Short Form Contracts:						
Drilling						
Bulldozing						
Crosscutting						
Drifting						
Shaft Sinking	4023.-	30,083.10	34,106.10	4023.00	30,083.10	34,106.10
(2) Labor and Supervision:						
Labor						
Supervision						
Technical Services	250.-	1750	2,000.-	250.00	1,750.00	2,000.00
(3) Operating Mat'ls. and Supplies:						
Timber						
Explosives						
Pipe						
Track						
(4) Operating Equipment:						
Rental						
Purchase						
Depreciation						
(5) Initial Rehabilitation and Repairs						
(6) New Bldgs., Improvements, etc.						
(7) Miscellaneous:						
Repairs to Equipment						
Sampling and Analysis						
Payroll Taxes						
Liability Insurance						
(8) Contingencies (specify):						
TOTALS	4273.00	31,833.10	36,106.10	4273.00	31,833.10	36,106.10

I certify that the above bill is correct and just and that payment therefor has not been received.

Date 4/5/58 *Payee Clayton Silver Mines

Per [signature] Title Gen Mgr

*When a voucher is signed or receipted in the name of a company or corporation, the name of the person writing the company or corporate name, as well as the capacity in which he signs, must appear. For example: "John Doe Company, per John Smith, Secretary," or "Treasurer," as the case may be.

NOTE.—Title 18, U. S. Code (Crimes), section 1001, makes it a criminal offense to make a willfully false statement or representation to any department or agency of the United States as to any matter within its jurisdiction.

(Instructions on reverse)

Pursuant to authority vested in me, I certify that this account is correct and proper for payment in the amount of:

$ 2136.50

Signature Dorothy F. Long
(Authorized Certifying Officer)

Date 4/10/58 Vou. No. 2145

(See other side)

(For Government use only)

CERTIFICATION BY GOVERNMENT REPRESENTATIVE:

I certify that to the best of my knowledge and belief the contractor submitting this voucher is operating a Defense Minerals Exploration Administration project under Contract No. E-1108 in accordance with the terms of the contract.

Signature /s/ William M. Romecher Title Mining Engr. Date 4/9/58

APPROVAL BY DMEA EXECUTIVE OFFICER OR ALTERNATE:

Signature /s/ A. E. Weissenborn Title Exec. Officer Date April 10, 1958

MONTHLY REPORT OF OPERATOR

The Operator (Contractor) of an exploration project is required to make a monthly report to the Government through the Regional Executive Officer. This report consists of three parts as follows:

(a) *Form MF-104—Operator's Monthly Report and Voucher.*—This form details expenditures and constitutes a voucher for reimbursing the Operator for the Government's share of costs;

(b) *Form MF-104A—Operator's Unit Cost and Progress Report.*—This is a statistical report of expenditures which shows costs for the various types of operation; and

(c) *Narrative.*—A concise narrative description of progress made, results accomplished, and any unusual difficulties encountered must be furnished as an attachment to this Report and Voucher. Wherever possible, the narrative is to be illustrated with maps or sketches showing formations penetrated and location and assays of samples taken as well as advances in workings. In the case of diamond drilling or churn drilling, the location and inclination of holes is to be shown on a map; logs and assays also are to be submitted.

The Monthly Report of Operator should be prepared in an original and four copies all of which must be sent to the Executive Officer of the Region not later than the 15th of the month following.

Preparation of Form MF-104—Operator's Monthly Report and Voucher.—All the applicable spaces in Form MF-104 should be filled in by the Operator, and the Operator or his agent should sign the certification in the lower left corner of the form.

The items of costs are arranged in the order they appear in Article 6 (a) of Form MF-200 (Revised February 1952), however, this form is readily adaptable for use in reporting activities under other contract forms.

Under Item (1) delete words "Short Form" if the contract is a sub-contract under Form MF-200; and delete word "Independent" if the contract reported is on Form MF-200 (A). Also, report work paid for on a unit basis under contract Form MF-200 as though it were performed under an independent contract.

Under Item (2) include labor, supervision and technical services incurred for the exploratory operations. Do not include labor, supervision and technical services used for work performed under items (5) and (6).

Under Item (3) include the costs of material and supplies used in the project other than that used under items (5) and (6).

Under Item (4) appear the three types of operating equipment expenditures, that is, rental, purchase and depreciation. The expenditures made for renting equipment belonging to a third party will be reported under "Rental". The amount paid or duly obligated for payment for the purchase of equipment will be reported under "Purchase". The amount of expenditures due the Operator to reimburse him for depreciation of equipment owned will be reported under "Depreciation".

Item (5) comprises costs of labor, supervision, technical services, materials, etc., which are used in the initial rehabilitation and repair of existing buildings, installations, fixtures, and equipment. These costs, therefore, should not be reported under items (2) and (3).

Item (6) includes the labor, supervision, technical services, materials, etc., used in the installation or construction of new buildings, fixed improvements, etc., necessary for the project. These costs, therefore, should not be reported under items (2) and (3).

Item (7) covers miscellaneous types of expenditure such as payroll taxes, liability insurance, workmen's compensation insurance, repairs to equipment and sampling and analysis. Only that part of payroll taxes, liability insurance and workmen's compensation which are paid by the operator should be reported under item (7). The share paid by the employee as a payroll deduction is to be included under item (2) as labor costs.

Item (8) includes any unforeseen costs not included in the other seven categories.

The original of Form MF-104 when submitted for reimbursable expenses incurred under contract Form MF-200 must be supported by original documentation or by certified copies of purchase orders, payrolls or transcripts of payrolls, unless such documentation has been waived by the Regional Executive Officer. This certification may be stated thus, "Certified True Copy (or Transcript)", followed by appropriate signature. If the Executive Officer of the Region determines that a contract under Form MF-200 should have an "on-site" audit, that is, a Government auditor should make an audit of the Operator's books and records of account, the Operator need not support his monthly voucher with original or certified documents except in cases of equipment purchases whose individual costs exceed $50.00. In these cases the original or a certified copy of the purchase order or invoice should be attached to the Monthly Voucher. N. B.—Only the *original* of Form MF-104 is required to be documented. The four copies of Form MF-104 are not to be thus supported.

Form MF-104 submitted for reimbursement under fixed price contracts on Form MF-200 (A), however, are not required to be supported by documentation of any kind. The Operator will submit his claim under item (1) of Form MF-104 by deleting as stated above the word "Independent" and by showing the number of feet or other units immediately after the appropriate descriptive word, such as, drilling, bulldozing, crosscutting, drifting, etc., and giving the "Monthly Total" amount due. "Totals Previously Reported", and "Totals to Date" columns should also be filled in.

Form MF-104A
(April 1962)

Budget Bureau No. 42-R1151.2

RECEIVED APR 14 1958 DMEA

UNITED STATES
DEPARTMENT OF THE INTERIOR
DEFENSE MINERALS EXPLORATION ADMINISTRATION
OPERATOR'S UNIT COST AND PROGRESS REPORT

Month of March 1958 Docket No. DMEA 4659 Contract No. E-1108
Operator's Name Clayton Silver Mines Minerals Pb-Zn
Address Kellogg, Idaho

OPERATION	UNIT	COSTS THIS MONTH	UNITS THIS MONTH	COSTS TO DATE	UNITS TO DATE	UNIT COSTS TO DATE	AUTHORIZED BY CONTRACT Units	AUTHORIZED BY CONTRACT Unit Costs
Drifting								
Crosscutting								
Raising								
Shafts	ft	4023.	27.0	34,106.10	228.9	$149.	300	$149.
Winzes								
Drilling: Core								
Churn								
Auger								
Stripping								
Trenching								
Test Pits								
Roads and Trails								
TOTAL DISTRIBUTED COSTS		4023.		34,106.10				TOTAL COSTS AUTHORIZED BY CONTRACT
Operating Equipment Purchased								
Initial Rehabilitation and Repairs								
New Buildings, Improvements, etc.								
Engineering		250		2000.				5,750
TOTAL COSTS		4273.-		36,106.10				130,840

The undersigned company, and the official executing this certification on its behalf, hereby certify that the information contained in this report is correct and complete to the best of their knowledge and belief.

Date 4-5-58 Operator Clayton Silver Mines

Per M M Smith Title Gen Mgr.

NOTE.—Title 18, U. S. Code (Crimes), section 1001, makes it a criminal offense to make a willfully false statement or representation to any department or agency of the United States as to any matter within its jurisdiction.

REMARKS:

(Instructions on reverse)

(For Government use only)

/s/ William M. Romischer, 4/9/58

INSTRUCTIONS

Preparation of Form MF-104A—Operator's Unit Cost and Progress Report.—Applicable places on Form 104A should be filled in by the Operator. The purpose of this form is twofold as follows: (1) to furnish the supervising engineers and other administrators with statistical information necessary to better determine the progress of the project; and (2) to furnish more permanent information on mining costs for future use. The more important phases of operation on which permanent information is desired have been outlined in the form. There are blank lines, however, for those unusual phases which may need to be reported for a particular project. It will be necessary for the Operator to distribute his costs among the applicable phases reported with the exception of three items the costs of which are not to be distributed by the Operator. These three items are: "Operating Equipment Purchased", "Initial Rehabilitation and Repairs", and "New Buildings, Improvements, etc." The reason for not distributing these items on a monthly basis is doubtless clear to the Operator, since such distribution might well overstate the cost for any one month or period short of the entire contract period.

Form MF-104A has been designed to tie in with Form MF-104 for both monthly and cumulative costs. The "Total Costs" on Form MF-104A for each month should equal the monthly "Total Costs" as reported on Form MF-104. This is also true of the "Total Costs To Date".

In preparing Form MF-104A, it will be necessary frequently to distribute certain costs over a number of items. For instance, supervisory and engineering costs may have to be distributed over several phases, such as, drifting, crosscutting, raising, etc., provided that these items were reported active for the month. Such distributions should be made on the basis of time spent on the various phases, on man days of labor charged to such phases, or on some other equitable basis. "Operating Equipment", "Initial Rehabilitation and Repairs", and "New Buildings Improvements, etc.", will be distributed to the several phases of the project by the Washington Office of DMEA at the close of the project if determined necessary. The last two columns headed "Authorized by Contract" will be filled in by the Operator if such information is found in the contract. This information is usually a part of Exhibit "A" of the contract. A space for remarks has been provided for the use of the Operator to call attention to any unusual circumstances causing excessive or disproportionate unit costs.

GPO 872894

CLAYTON SILVER MINES

Docket No. DMEA 4659
Contract No. Idm E-1108

NARRATIVE

Month of March 1958

The Clayton shaft was sunk during the month of March 1958 a distance of 27.0 feet from a point 283.9 ft. to 310.9 ft. below the 500 sill.

Three regular shaft sets of timber were installed. The next set will be the 800-station set (length ± 13 feet).

Pump and water troubles were again encountered during March. A 20 hp motor-pump burned out (electrical). While it was being repaired in Salt Lake, a falling rock damaged the wiring to the bottom pump and the shaft flooded to the 700 station. During this sudden flooding, two pumps were drown (flooded) but were not damaged. The Salt Lake repaired pump was rushed in and bottom was regained again after only a couple days' delay. Considerable heavier flow has been encountered at the present bottom - just below where the 800 sill will be established.

Submitted by:

Norman M. Smith
General Manager

Form MF-104 (Rev.)
(April 1952)

Budget Bureau No. 42-R1036.5

UNITED STATES
DEPARTMENT OF THE INTERIOR
DEFENSE MINERALS EXPLORATION ADMINISTRATION
OPERATOR'S MONTHLY REPORT AND VOUCHER

RECEIVED MAR 20 1958 D.M.E.A.

Month of Feb., 1958 Docket No. DMEA 4659 Contract No. E-1108
Operator's Name Clayton Silver Mines Minerals Pb-Zn
Address Kellogg, Idaho
Contract Amount, $ 130,840 Government Participation: 50 % Amount, $ 65,420

ITEMS OF COSTS	FOR OPERATOR'S USE			FOR GOVERNMENT USE ONLY		
	Monthly Total	Totals Previously Reported	Totals To Date	Approved Monthly Total	Approved Totals Previously Reported	Approved Totals To Date
(1) Independent Short Form Contracts:						
Drilling						
Bulldozing						
Crosscutting						
Drifting						
Shaft Sinking	3129.00	26,954.10	30,083.10	3129.00	26,954.10	30,083.10
(2) Labor and Supervision:						
Labor						
Supervision						
Technical Services	250.00	1500.00	1750.00	250.00	1,500.00	1,750.00
(3) Operating Mat'ls. and Supplies:						
Timber						
Explosives						
Pipe						
Track						
(4) Operating Equipment:						
Rental						
Purchase						
Depreciation						
(5) Initial Rehabilitation and Repairs						
(6) New Bldgs., Improvements, etc.						
(7) Miscellaneous:						
Repairs to Equipment						
Sampling and Analysis						
Payroll Taxes						
Liability Insurance						
(8) Contingencies (specify):						
TOTALS	3379.00	28,454.10	31,833.10	3379.00	28454.10	31,833.10

I certify that the above bill is correct and just and that payment therefor has not been received.

Date 3-10-58 *Payee Clayton Silver Mines

Per M. M. Smith Title Gen. Mgr.

*When a voucher is signed or receipted in the name of a company or corporation, the name of the person writing the company or corporate name, as well as the capacity in which he signs, must appear. For example: "John Doe Company, per John Smith, Secretary," or "Treasurer," as the case may be.

NOTE.—Title 18, U. S. Code (Crimes), section 1001, makes it a criminal offense to make a willfully false statement or representation to any department or agency of the United States as to any matter within its jurisdiction.

(Instructions on reverse)

Pursuant to authority vested in me, I certify that this account is correct and proper for payment in the amount of:

$1689.50 $ 1689.50

Signature Dorothy F. Long
(Authorized Certifying Officer)

Date 3/14/58 Vou. No. 2731

(See other side)

(For Government use only)

CERTIFICATION BY GOVERNMENT REPRESENTATIVE:

I certify that to the best of my knowledge and belief the contractor submitting this voucher is operating a Defense Minerals Exploration Administration project under Contract No. E1108 in accordance with the terms of the contract.

Signature /s/ William M. Romischer Title Mining Engr. Date 3/11/58

APPROVAL BY DMEA EXECUTIVE OFFICER OR ALTERNATE:

Signature /s/ A. E. Weissenborn Title Exec. Officer Date March 12, 1958

MONTHLY REPORT OF OPERATOR

The Operator (Contractor) of an exploration project is required to make a monthly report to the Government through the Regional Executive Officer. This report consists of three parts as follows:

(a) *Form MF-104—Operator's Monthly Report and Voucher.*—This form details expenditures and constitutes a voucher for reimbursing the Operator for the Government's share of costs;

(b) *Form MF-104A—Operator's Unit Cost and Progress Report.*—This is a statistical report of expenditures which shows costs for the various types of operation; and

(c) *Narrative.*—A concise narrative description of progress made, results accomplished, and any unusual difficulties encountered must be furnished as an attachment to this Report and Voucher. Wherever possible, the narrative is to be illustrated with maps or sketches showing formations penetrated and location and assays of samples taken as well as advances in workings. In the case of diamond drilling or churn drilling, the location and inclination of holes is to be shown on a map; logs and assays also are to be submitted.

The Monthly Report of Operator should be prepared in an original and four copies all of which must be sent to the Executive Officer of the Region not later than the 15th of the month following.

Preparation of Form MF-104—Operator's Monthly Report and Voucher.—All the applicable spaces in Form MF-104 should be filled in by the Operator, and the Operator or his agent should sign the certification in the lower left corner of the form.

The items of costs are arranged in the order they appear in Article 6 (a) of Form MF-200 (Revised February 1952), however, this form is readily adaptable for use in reporting activities under other contract forms.

Under Item (1) delete words "Short Form" if the contract is a sub-contract under Form MF-200; and delete word "Independent" if the contract reported is on Form MF-200 (A). Also, report work paid for on a unit basis under contract Form MF-200 as though it were performed under an independent contract.

Under Item (2) include labor, supervision and technical services incurred for the exploratory operations. Do not include labor, supervision and technical services used for work performed under items (5) and (6).

Under Item (3) include the costs of material and supplies used in the project other than that used under items (5) and (6).

Under Item (4) appear the three types of operating equipment expenditures, that is, rental, purchase and depreciation. The expenditures made for renting equipment belonging to a third party will be reported under "Rental". The amount paid or duly obligated for payment for the purchase of equipment will be reported under "Purchase". The amount of expenditures due the Operator to reimburse him for depreciation of equipment owned will be reported under "Depreciation".

Item (5) comprises costs of labor, supervision, technical services, materials, etc., which are used in the initial rehabilitation and repair of existing buildings, installations, fixtures, and equipment. These costs, therefore, should not be reported under items (2) and (3).

Item (6) includes the labor, supervision, technical services, materials, etc., used in the installation or construction of new buildings, fixed improvements, etc., necessary for the project. These costs, therefore, should not be reported under items (2) and (3).

Item (7) covers miscellaneous types of expenditure such as payroll taxes, liability insurance, workmen's compensation insurance, repairs to equipment and sampling and analysis. Only that part of payroll taxes, liability insurance and workmen's compensation which are paid by the operator should be reported under item (7). The share paid by the employee as a payroll deduction is to be included under item (2) as labor costs.

Item (8) includes any unforeseen costs not included in the other seven categories.

The original of Form MF-104 when submitted for reimbursable expenses incurred under contract Form MF-200 must be supported by original documentation or by certified copies of purchase orders, payrolls or transcripts of payrolls, unless such documentation has been waived by the Regional Executive Officer. This certification may be stated thus, "Certified True Copy (or Transcript)", followed by appropriate signature. If the Executive Officer of the Region determines that a contract under Form MF-200 should have an "on-site" audit, that is, a Government auditor should make an audit of the Operator's books and records of account, the Operator need not support his monthly voucher with original or certified documents except in cases of equipment purchases whose individual costs exceed $50.00. In these cases the original or a certified copy of the purchase order or invoice should be attached to the Monthly Voucher. N. B.—Only the *original* of Form MF-104 is required to be documented. The four copies of Form MF-104 are not to be thus supported.

Form MF-104 submitted for reimbursement under fixed price contracts on Form MF-200 (A), however, are not required to be supported by documentation of any kind. The Operator will submit his claim under item (1) of Form MF-104 by deleting as stated above the word "Independent" and by showing the number of feet or other units immediately after the appropriate descriptive word, such as, drilling, bulldozing, crosscutting, drifting, etc., and giving the "Monthly Total" amount due. "Totals Previously Reported", and "Totals to Date" columns should also be filled in.

Form MF-104A
(April 1962)

Budget Bureau No. 42-R1151.2

RECEIVED
MAR 20 1958
D.M.E.A.

UNITED STATES
DEPARTMENT OF THE INTERIOR
DEFENSE MINERALS EXPLORATION ADMINISTRATION
OPERATOR'S UNIT COST AND PROGRESS REPORT

Month of Feb 1958 Docket No. DMEA 4659 Contract No. E-1108
Operator's Name Clayton Silver Mines Minerals Pb-Zn
Address Kellogg, Idaho

OPERATION	Unit	Costs This Month	Units This Month	Costs to Date	Units to Date	Unit Costs to Date	Authorized by Contract: Units	Authorized by Contract: Unit Costs
Drifting								
Crosscutting								
Raising								
Shafts	ft	3129.00	21.0	30083.10	201.9	$149	300	$149
Winzes								
Drilling: Core								
Churn								
Auger								
Stripping								
Trenching								
Test Pits								
Roads and Trails								
Total Distributed Costs		3129.00		30 083.10				Total Costs Authorized by Contract
Operating Equipment Purchased								
Initial Rehabilitation and Repairs								
New Buildings, Improvements, etc.								
Engineering		250.00		1750.00				5,750
Total Costs		3379.00		31,833.10				130,840

The undersigned company, and the official executing this certification on its behalf, hereby certify that the information contained in this report is correct and complete to the best of their knowledge and belief.

Date 3-10-58 Operator Clayton Silver Mines

Per M. M. Smith Title Gen. Mgr.

NOTE.—Title 18, U. S. Code (Crimes), section 1001, makes it a criminal offense to make a willfully false statement or representation to any department or agency of the United States as to any matter within its jurisdiction.

(Instructions on reverse)

Remarks:

(For Government use only)

/s/ William M. Romischer, Mining Engr., 3/11/58

INSTRUCTIONS

Preparation of Form MF–104A—Operator's Unit Cost and Progress Report.—Applicable places on Form 104A should be filled in by the Operator. The purpose of this form is twofold as follows: (1) to furnish the supervising engineers and other administrators with statistical information necessary to better determine the progress of the project; and (2) to furnish more permanent information on mining costs for future use. The more important phases of operation on which permanent information is desired have been outlined in the form. There are blank lines, however, for those unusual phases which may need to be reported for a particular project. It will be necessary for the Operator to distribute his costs among the applicable phases reported with the exception of three items the costs of which are not to be distributed by the Operator. These three items are: "Operating Equipment Purchased", "Initial Rehabilitation and Repairs", and "New Buildings, Improvements, etc." The reason for not distributing these items on a monthly basis is doubtless clear to the Operator, since such distribution might well overstate the cost for any one month or period short of the entire contract period.

Form MF–104A has been designed to tie in with Form MF–104 for both monthly and cumulative costs. The "Total Costs" on Form MF–104A for each month should equal the monthly "Total Costs" as reported on Form MF–104. This is also true of the "Total Costs To Date".

In preparing Form MF–104A, it will be necessary frequently to distribute certain costs over a number of items. For instance, supervisory and engineering costs may have to be distributed over several phases, such as, drifting, crosscutting, raising, etc., provided that these items were reported active for the month. Such distributions should be made on the basis of time spent on the various phases, on man days of labor charged to such phases, or on some other equitable basis. "Operating Equipment", "Initial Rehabilitation and Repairs", and "New Buildings Improvements, etc.", will be distributed to the several phases of the project by the Washington Office of DMEA at the close of the project if determined necessary. The last two columns headed "Authorized by Contract" will be filled in by the Operator if such information is found in the contract. This information is usually a part of Exhibit "A" of the contract. A space for remarks has been provided for the use of the Operator to call attention to any unusual circumstances causing excessive or disproportionate unit costs.

GPO 872894

CLAYTON SILVER MINES

Docket No. DMEA 4659
Contract No. Idm E-1108

Narrative

Month of February 1958

The Clayton Shaft was sunk during the month of February 1958 a distance of 21.0 feet from a point 262.9 ft. to 283.9 ft. below the 500 sill.

Three regular shaft sets of timber were installed.

Considerable water trouble was encountered during the month caused by increase of water volume and increased head on pumps. It was necessary to install 2 jets in the bottom and 2 motor- pumps in shaft above bottom. Total motor power now being used to pump shaft-water to 500-level amounts to 65 h.p. The purchase of another 20 h.p. motor-pump was necessary.

Submitted by:

Norman M. Smith
General Manager

Form [redacted] 104 (Rev.)
(April 1952)

Budget Bureau No. 42-R1036.5

UNITED STATES
DEPARTMENT OF THE INTERIOR
DEFENSE MINERALS EXPLORATION ADMINISTRATION
OPERATOR'S MONTHLY REPORT AND VOUCHER

Month of Jan, 1958 Docket No. DMEA 4659 Contract No. E-1108
Operator's Name Clayton Silver Mines Minerals Pb-Zn
Address Kellogg, Idaho
Contract Amount, $ 130,840 Government Participation: 50 % Amount, $ 65,420

ITEMS OF COSTS	FOR OPERATOR'S USE			FOR GOVERNMENT USE ONLY		
	Monthly Total	Totals Previously Reported	Totals To Date	Approved Monthly Total	Approved Totals Previously Reported	Approved Totals To Date
(1) Independent Short Form Contracts:						
Drilling						
Bulldozing						
Crosscutting						
Drifting						
Shaft Sinking	5960.00	20,994.10	26,954.10	5960.00	20994.10	26,954.10
(2) Labor and Supervision:						
Labor						
Supervision						
Technical Services	250.	1250.	1500.	250.00	1250.00	1500.00
(3) Operating Mat'ls. and Supplies:						
Timber						
Explosives						
Pipe						
Track						
(4) Operating Equipment:						
Rental						
Purchase						
Depreciation						
(5) Initial Rehabilitation and Repairs						
(6) New Bldgs., Improvements, etc.						
(7) Miscellaneous:						
Repairs to Equipment						
Sampling and Analysis						
Payroll Taxes						
Liability Insurance						
(8) Contingencies (specify):						
TOTALS	6210.00	22,244.10	28,454.10	6210.00	22,244.10	28,454.10

I certify that the above bill is correct and just and that payment therefor has not been received.

Date 2-8-58 *Payee Clayton Silver Mines

Per M. M. Smith Title Gen. Mgr.

*When a voucher is signed or receipted in the name of a company or corporation, the name of the person writing the company or corporate name, as well as the capacity in which he signs, must appear. For example: "John Doe Company, per John Smith, Secretary," or "Treasurer," as the case may be.

NOTE.—Title 18, U. S. Code (Crimes), section 1001, makes it a criminal offense to make a willfully false statement or representation to any department or agency of the United States as to any matter within its jurisdiction.

(Instructions on reverse)

Pursuant to authority vested in me, I certify that this account is correct and proper for payment in the amount of:

$ 3105.00

Signature Dorothy F. Long
(Authorized Certifying Officer)

Date 2/21/58 Vou. No. 2127

(See other side)

(For Government use only)

CERTIFICATION BY GOVERNMENT REPRESENTATIVE:

I certify that to the best of my knowledge and belief the contractor submitting this voucher is operating a Defense Minerals Exploration Administration project under Contract No. 6 1108 in accordance with the terms of the contract.

Signature /s/ William M. Konisiter Title Mining Engr. Date 7/17/58

APPROVAL BY DMEA EXECUTIVE OFFICER OR ALTERNATE:

Signature /s/ Wing L. Agnew Title Acting Engr. Date 7/20/58

MONTHLY REPORT OF OPERATOR

The Operator (Contractor) of an exploration project is required to make a monthly report to the Government through the Regional Executive Officer. This report consists of three parts as follows:

(a) *Form MF-104—Operator's Monthly Report and Voucher.*—This form details expenditures and constitutes a voucher for reimbursing the Operator for the Government's share of costs;

(b) *Form MF-104A—Operator's Unit Cost and Progress Report.*—This is a statistical report of expenditures which shows costs for the various types of operation; and

(c) *Narrative.*—A concise narrative description of progress made, results accomplished, and any unusual difficulties encountered must be furnished as an attachment to this Report and Voucher. Wherever possible, the narrative is to be illustrated with maps or sketches showing formations penetrated and location and assays of samples taken as well as advances in workings. In the case of diamond drilling or churn drilling, the location and inclination of holes is to be shown on a map; logs and assays also are to be submitted.

The Monthly Report of Operator should be prepared in an original and four copies all of which must be sent to the Executive Officer of the Region not later than the 15th of the month following.

Preparation of Form MF-104—Operator's Monthly Report and Voucher.—All the applicable spaces in Form MF-104 should be filled in by the Operator, and the Operator or his agent should sign the certification in the lower left corner of the form.

The items of costs are arranged in the order they appear in Article 6 (a) of Form MF-200 (Revised February 1952), however, this form is readily adaptable for use in reporting activities under other contract forms.

Under Item (1) delete words "Short Form" if the contract is a sub-contract under Form MF-200; and delete word "Independent" if the contract reported is on Form MF-200 (A). Also, report work paid for on a unit basis under contract Form MF-200 as though it were performed under an independent contract.

Under Item (2) include labor, supervision and technical services incurred for the exploratory operations. Do not include labor, supervision and technical services used for work performed under items (5) and (6).

Under Item (3) include the costs of material and supplies used in the project other than that used under items (5) and (6).

Under Item (4) appear the three types of operating equipment expenditures, that is, rental, purchase and depreciation. The expenditures made for renting equipment belonging to a third party will be reported under "Rental". The amount paid or duly obligated for payment for the purchase of equipment will be reported under "Purchase". The amount of expenditures due the Operator to reimburse him for depreciation of equipment owned will be reported under "Depreciation".

Item (5) comprises costs of labor, supervision, technical services, materials, etc., which are used in the initial rehabilitation and repair of existing buildings, installations, fixtures, and equipment. These costs, therefore, should not be reported under items (2) and (3).

Item (6) includes the labor, supervision, technical services, materials, etc., used in the installation or construction of new buildings, fixed improvements, etc., necessary for the project. These costs, therefore, should not be reported under items (2) and (3).

Item (7) covers miscellaneous types of expenditure such as payroll taxes, liability insurance, workmen's compensation insurance, repairs to equipment and sampling and analysis. Only that part of payroll taxes, liability insurance and workmen's compensation which are paid by the operator should be reported under item (7). The share paid by the employee as a payroll deduction is to be included under item (2) as labor costs.

Item (8) includes any unforeseen costs not included in the other seven categories.

The original of Form MF-104 when submitted for reimbursable expenses incurred under contract Form MF-200 must be supported by original documentation or by certified copies of purchase orders, payrolls or transcripts of payrolls, unless such documentation has been waived by the Regional Executive Officer. This certification may be stated thus, "Certified True Copy (or Transcript)", followed by appropriate signature. If the Executive Officer of the Region determines that a contract under Form MF-200 should have an "on-site" audit, that is, a Government auditor should make an audit of the Operator's books and records of account, the Operator need not support his monthly voucher with original or certified documents except in cases of equipment purchases whose individual costs exceed $50.00. In these cases the original or a certified copy of the purchase order or invoice should be attached to the Monthly Voucher. N. B.—Only the *original* of Form MF-104 is required to be documented. The four copies of Form MF-104 are not to be thus supported.

Form MF-104 submitted for reimbursement under fixed price contracts on Form MF-200 (A), however, are not required to be supported by documentation of any kind. The Operator will submit his claim under item (1) of Form MF-104 by deleting as stated above the word "Independent" and by showing the number of feet or other units immediately after the appropriate descriptive word, such as, drilling, bulldozing, crosscutting, drifting, etc., and giving the "Monthly Total" amount due. "Totals Previously Reported", and "Totals to Date" columns should also be filled in.

Form [illegible]04A
(Apr[illegible]52)

Budget Bureau No. 42-R1151.2

UNITED STATES
DEPARTMENT OF THE INTERIOR

DEFENSE MINERALS EXPLORATION ADMINISTRATION

OPERATOR'S UNIT COST AND PROGRESS REPORT

Month of Jan 1958 Docket No. DMEA 4659 Contract No. E-1108
Operator's Name Clayton Silver Mines Minerals Pb-Zn
Address Kellogg, Idaho

OPERATION	UNIT	COSTS THIS MONTH	UNITS THIS MONTH	COSTS TO DATE	UNITS TO DATE	UNIT COSTS TO DATE	AUTHORIZED BY CONTRACT	
							Units	Unit Costs
Drifting								
Crosscutting								
Raising								
Shafts	ft	5960	40.0	26954.10	180.9	$149.	300	$149.
Winzes								
Drilling: Core								
Churn								
Auger								
Stripping								
Trenching								
Test Pits								
Roads and Trails								
TOTAL DISTRIBUTED COSTS		5960.00		26,954.10				TOTAL COSTS AUTHORIZED BY CONTRACT
Operating Equipment Purchased								
Initial Rehabilitation and Repairs								
New Buildings, Improvements, etc.								
Engineering		250		1 500.				5,750
TOTAL COSTS		6210.00		28 454.10				130,840

The undersigned company, and the official executing this certification on its behalf, hereby certify that the information contained in this report is correct and complete to the best of their knowledge and belief.

Date 2-8-58 Operator Clayton Silver Mines

Per M. M. Smith Title Gen. Mgr.

NOTE.—Title 18, U. S. Code (Crimes), section 1001, makes it a criminal offense to make a willfully false statement or representation to any department or agency of the United States as to any matter within its jurisdiction.

REMARKS:

(Instructions on reverse)

(For Government use only)

/s/ William M. Romischer, Mining Engr.
2/17/58

INSTRUCTIONS

Preparation of Form MF–104A—Operator's Unit Cost and Progress Report.—Applicable places on Form 104A should be filled in by the Operator. The purpose of this form is twofold as follows: (1) to furnish the supervising engineers and other administrators with statistical information necessary to better determine the progress of the project; and (2) to furnish more permanent information on mining costs for future use. The more important phases of operation on which permanent information is desired have been outlined in the form. There are blank lines, however, for those unusual phases which may need to be reported for a particular project. It will be necessary for the Operator to distribute his costs among the applicable phases reported with the exception of three items the costs of which are not to be distributed by the Operator. These three items are: "Operating Equipment Purchased", "Initial Rehabilitation and Repairs", and "New Buildings, Improvements, etc." The reason for not distributing these items on a monthly basis is doubtless clear to the Operator, since such distribution might well overstate the cost for any one month or period short of the entire contract period.

Form MF–104A has been designed to tie in with Form MF–104 for both monthly and cumulative costs. The "Total Costs" on Form MF–104A for each month should equal the monthly "Total Costs" as reported on Form MF–104. This is also true of the "Total Costs To Date".

In preparing Form MF–104A, it will be necessary frequently to distribute certain costs over a number of items. For instance, supervisory and engineering costs may have to be distributed over several phases, such as, drifting, crosscutting, raising, etc., provided that these items were reported active for the month. Such distributions should be made on the basis of time spent on the various phases, on man days of labor charged to such phases, or on some other equitable basis. "Operating Equipment", "Initial Rehabilitation and Repairs", and "New Buildings Improvements, etc.", will be distributed to the several phases of the project by the Washington Office of DMEA at the close of the project if determined necessary. The last two columns headed "Authorized by Contract" will be filled in by the Operator if such information is found in the contract. This information is usually a part of Exhibit "A" of the contract. A space for remarks has been provided for the use of the Operator to call attention to any unusual circumstances causing excessive or disproportionate unit costs.

GPO 872894

CLAYTON SILVER MINES

Docket No. DMEA 4659
Contract No. Idm-E 1108

NARRATIVE
Month of January 1958

The Clayton Shaft was sunk, during the month of January 1958, a distance of 40.0 feet from a point 222.9 feet to a point 262.9 feet below the sill.

Timber installed during this project, to date consists of 25 sets, to a point 250 feet below 500 sill.

Enclosed is a section sketch of shaft showing January 1958 advance and proposed locations of 800 Station, ore pockets and loading station.

Submitted by:

Norman M. Smith

Norman M. Smith

Form ME-104 (Rev.)
(April 1952)

RECEIVED JAN 20 1958

Budget Bureau No. 42-R1036.5

UNITED STATES
DEPARTMENT OF THE INTERIOR
DEFENSE MINERALS EXPLORATION ADMINISTRATION
OPERATOR'S MONTHLY REPORT AND VOUCHER

Month of December, 1957 Docket No. DMEA 4659 Contract No. E 1108
Operator's Name Clayton Silver Mines Minerals Pb - Zn
Address Kellogg, Idaho
Contract Amount, $ 130,840 Government Participation: 50% Amount, $ 65,420

ITEMS OF COSTS	FOR OPERATOR'S USE			FOR GOVERNMENT USE ONLY		
	Monthly Total	Totals Previously Reported	Totals To Date	Approved Monthly Total	Approved Totals Previously Reported	Approved Totals To Date
(1) Independent Short Form Contracts:						
Drilling						
Bulldozing						
Crosscutting						
Drifting						
Shaft Sinking	5066.-	15,928.10	20,994.10	5,066.00	15,928.10	20,994.10
(2) Labor and Supervision:						
Labor						
Supervision						
Technical Services	250	1,000.	1250-	250.00	1,000.00	1,250.00
(3) Operating Mat'ls. and Supplies:						
Timber						
Explosives						
Pipe						
Track						
(4) Operating Equipment:						
Rental						
Purchase						
Depreciation						
(5) Initial Rehabilitation and Repairs						
(6) New Bldgs., Improvements, etc.						
(7) Miscellaneous:						
Repairs to Equipment						
Sampling and Analysis						
Payroll Taxes						
Liability Insurance						
(8) Contingencies (specify):						
TOTALS	5316.00	16,928.10	22,244.10	5316.00	16,928.10	22,244.10

I certify that the above bill is correct and just and that payment therefor has not been received.

Date 1/6/58 *Payee Clayton Silver Mines

Per [signature] Title Gen. Mgr.

*When a voucher is signed or receipted in the name of a company or corporation, the name of the person writing the company or corporate name, as well as the capacity in which he signs, must appear. For example: "John Doe Company, per John Smith, Secretary," or "Treasurer," as the case may be.

NOTE.—Title 18, U. S. Code (Crimes), section 1001, makes it a criminal offense to make a willfully false statement or representation to any department or agency of the United States as to any matter within its jurisdiction.

(Instructions on reverse)

Pursuant to authority vested in me, I certify that this account is correct and proper for payment in the amount of:

$ 2658.00

Signature Dorothy F. Long
(Authorized Certifying Officer)

Date 1/14/58 Vou. No. 2104

(See other side)

(For Government use only)

CERTIFICATION BY GOVERNMENT REPRESENTATIVE:

I certify that to the best of my knowledge and belief the contractor submitting this voucher is operating a Defense Minerals Exploration Administration project under Contract No. E-1102 in accordance with the terms of the contract.

Signature /s/ William M. Konischer Title Mining Engr. Date 1/13/58

APPROVAL BY DMEA EXECUTIVE OFFICER OR ALTERNATE:

Signature /s/ A. E. Weissenborn Title Exec. Officer Date Jan. 14, 1958

MONTHLY REPORT OF OPERATOR

The Operator (Contractor) of an exploration project is required to make a monthly report to the Government through the Regional Executive Officer. This report consists of three parts as follows:

(*a*) *Form MF-104—Operator's Monthly Report and Voucher.*—This form details expenditures and constitutes a voucher for reimbursing the Operator for the Government's share of costs;

(*b*) *Form MF-104A—Operator's Unit Cost and Progress Report.*—This is a statistical report of expenditures which shows costs for the various types of operation; and

(*c*) *Narrative.*—A concise narrative description of progress made, results accomplished, and any unusual difficulties encountered must be furnished as an attachment to this Report and Voucher. Wherever possible, the narrative is to be illustrated with maps or sketches showing formations penetrated and location and assays of samples taken as well as advances in workings. In the case of diamond drilling or churn drilling, the location and inclination of holes is to be shown on a map; logs and assays also are to be submitted.

The Monthly Report of Operator should be prepared in an original and four copies all of which must be sent to the Executive Officer of the Region not later than the 15th of the month following.

Preparation of Form MF-104—Operator's Monthly Report and Voucher.—All the applicable spaces in Form MF-104 should be filled in by the Operator, and the Operator or his agent should sign the certification in the lower left corner of the form.

The items of costs are arranged in the order they appear in Article 6 (a) of Form MF-200 (Revised February 1952), however, this form is readily adaptable for use in reporting activities under other contract forms.

Under Item (1) delete words "Short Form" if the contract is a sub-contract under Form MF-200; and delete word "Independent" if the contract reported is on Form MF-200 (A). Also, report work paid for on a unit basis under contract Form MF-200 as though it were performed under an independent contract.

Under Item (2) include labor, supervision and technical services incurred for the exploratory operations. Do not include labor, supervision and technical services used for work performed under items (5) and (6).

Under Item (3) include the costs of material and supplies used in the project other than that used under items (5) and (6).

Under Item (4) appear the three types of operating equipment expenditures, that is, rental, purchase and depreciation. The expenditures made for renting equipment belonging to a third party will be reported under "Rental". The amount paid or duly obligated for payment for the purchase of equipment will be reported under "Purchase". The amount of expenditures due the Operator to reimburse him for depreciation of equipment owned will be reported under "Depreciation".

Item (5) comprises costs of labor, supervision, technical services, materials, etc., which are used in the initial rehabilitation and repair of existing buildings, installations, fixtures, and equipment. These costs, therefore, should not be reported under items (2) and (3).

Item (6) includes the labor, supervision, technical services, materials, etc., used in the installation or construction of new buildings, fixed improvements, etc., necessary for the project. These costs, therefore, should not be reported under items (2) and (3).

Item (7) covers miscellaneous types of expenditure such as payroll taxes, liability insurance, workmen's compensation insurance, repairs to equipment and sampling and analysis. Only that part of payroll taxes, liability insurance and workmen's compensation which are paid by the operator should be reported under item (7). The share paid by the employee as a payroll deduction is to be included under item (2) as labor costs.

Item (8) includes any unforeseen costs not included in the other seven categories.

The original of Form MF-104 when submitted for reimbursable expenses incurred under contract Form MF-200 must be supported by original documentation or by certified copies of purchase orders, payrolls or transcripts of payrolls, unless such documentation has been waived by the Regional Executive Officer. This certification may be stated thus, "Certified True Copy (or Transcript)", followed by appropriate signature. If the Executive Officer of the Region determines that a contract under Form MF-200 should have an "on-site" audit, that is, a Government auditor should make an audit of the Operator's books and records of account, the Operator need not support his monthly voucher with original or certified documents except in cases of equipment purchases whose individual costs exceed $50.00. In these cases the original or a certified copy of the purchase order or invoice should be attached to the Monthly Voucher. N. B.—Only the *original* of Form MF-104 is required to be documented. The four copies of Form MF-104 are not to be thus supported.

Form MF-104 submitted for reimbursement under fixed price contracts on Form MF-200 (A), however, are not required to be supported by documentation of any kind. The Operator will submit his claim under item (1) of Form MF-104 by deleting as stated above the word "Independent" and by showing the number of feet or other units immediately after the appropriate descriptive word, such as, drilling, bulldozing, crosscutting, drifting, etc., and giving the "Monthly Total" amount due. "Totals Previously Reported", and "Totals to Date" columns should also be filled in.

GPO 872893

Form MF-104A
(April 1952)

Budget Bureau No. 42-R1151.2

UNITED STATES
DEPARTMENT OF THE INTERIOR

DEFENSE MINERALS EXPLORATION ADMINISTRATION

OPERATOR'S UNIT COST AND PROGRESS REPORT

Month of Dec. 1957 Docket No. DMEA 4659 Contract No. F 1108

Operator's Name Clayton Silver Mines Minerals Pb - Zn

Address Kellogg, Idaho

OPERATION	UNIT	COSTS THIS MONTH	UNITS THIS MONTH	COSTS TO DATE	UNITS TO DATE	UNIT COSTS TO DATE	AUTHORIZED BY CONTRACT	
							Units	Unit Costs
Drifting								
Crosscutting								
Raising								
Shafts	Ft.	5,066.-	34.0	20,994.10	140.9	$149.	300	$149.
Winzes								
Drilling: Core								
Churn								
Auger								
Stripping								
Trenching								
Test Pits								
Roads and Trails								
TOTAL DISTRIBUTED COSTS		5,066.-	34.0	20,994.10				TOTAL COSTS AUTHORIZED BY CONTRACT
Operating Equipment Purchased								
Initial Rehabilitation and Repairs								
New Buildings, Improvements, etc.								
Engineering		250.-		1,250.-				5,750
TOTAL COSTS		5,316.		22,244.10				130,840

The undersigned company, and the official executing this certification on its behalf, hereby certify that the information contained in this report is correct and complete to the best of their knowledge and belief.

Date 1/6/58 Operator Clayton Silver Mines

Per M. M. McSmith Title Gen. Mgr.

NOTE.—Title 18, U. S. Code (Crimes), section 1001, makes it a criminal offense to make a willfully false statement or representation to any department or agency of the United States as to any matter within its jurisdiction.

REMARKS:

(Instructions on reverse)

(For Government use only)

1s/ William M. Konieschke, Mining Engr. 1/13/58

INSTRUCTIONS

Preparation of Form MF-104A—Operator's Unit Cost and Progress Report.—Applicable places on Form 104A should be filled in by the Operator. The purpose of this form is twofold as follows: (1) to furnish the supervising engineers and other administrators with statistical information necessary to better determine the progress of the project; and (2) to furnish more permanent information on mining costs for future use. The more important phases of operation on which permanent information is desired have been outlined in the form. There are blank lines, however, for those unusual phases which may need to be reported for a particular project. It will be necessary for the Operator to distribute his costs among the applicable phases reported with the exception of three items the costs of which are not to be distributed by the Operator. These three items are: "Operating Equipment Purchased", "Initial Rehabilitation and Repairs", and "New Buildings, Improvements, etc." The reason for not distributing these items on a monthly basis is doubtless clear to the Operator, since such distribution might well overstate the cost for any one month or period short of the entire contract period.

Form MF-104A has been designed to tie in with Form MF-104 for both monthly and cumulative costs. The "Total Costs" on Form MF-104A for each month should equal the monthly "Total Costs" as reported on Form MF-104. This is also true of the "Total Costs To Date".

In preparing Form MF-104A, it will be necessary frequently to distribute certain costs over a number of items. For instance, supervisory and engineering costs may have to be distributed over several phases, such as, drifting, crosscutting, raising, etc., provided that these items were reported active for the month. Such distributions should be made on the basis of time spent on the various phases, on man days of labor charged to such phases, or on some other equitable basis. "Operating Equipment", "Initial Rehabilitation and Repairs", and "New Buildings Improvements, etc.", will be distributed to the several phases of the project by the Washington Office of DMEA at the close of the project if determined necessary. The last two columns headed "Authorized by Contract" will be filled in by the Operator if such information is found in the contract. This information is usually a part of Exhibit "A" of the contract. A space for remarks has been provided for the use of the Operator to call attention to any unusual circumstances causing excessive or disproportionate unit costs.

GPO 872894

CLAYTON SILVER MINES

Docket No. DMEA 4659
Contract No. Idm-E1108

NARRATIVE

Month of December 1957

The Clayton Shaft was sunk during the month of December 1957 a distance of 34.0 feet to a point 222.9 feet below the 500-level sill.

Timber installed in shaft through set No. 19, to a point 208.0 feet below 500-level sill.

During the month, the 700 loading pocket station was timbered.

Submitted by:

Norman M. Smith

Norman M. Smith

Form MF-104 (Rev.)
(April 1952)

Budget Bureau No. 42-R1036.5

UNITED STATES
DEPARTMENT OF THE INTERIOR
DEFENSE MINERALS EXPLORATION ADMINISTRATION
OPERATOR'S MONTHLY REPORT AND VOUCHER

Month of Nov, 1957 Docket No. DMEA 4659 Contract No. E 1108
Operator's Name Clayton Silver Mines Minerals Pb - Zn
Address Kellogg, Idaho
Contract Amount, $ 130,840 Government Participation: 50% Amount, $ 65,420

ITEMS OF COSTS	FOR OPERATOR'S USE			FOR GOVERNMENT USE ONLY		
	Monthly Total	Totals Previously Reported	Totals To Date	Approved Monthly Total	Approved Totals Previously Reported	Approved Totals To Date
(1) Independent Short Form Contracts:						
Drilling						
Bulldozing						
Crosscutting						
Drifting						
Stoping & Stocking	3203.50	12,724.60	15,928.10	3203.50	12,724.60	15,928.10
(2) Labor and Supervision:						
Labor						
Supervision						
Technical Services	250.-	750	1,000	250.00	750.00	1000.00
(3) Operating Mat'ls. and Supplies:						
Timber						
Explosives						
Pipe						
Track						
(4) Operating Equipment:						
Rental						
Purchase						
Depreciation						
(5) Initial Rehabilitation and Repairs						
(6) New Bldgs., Improvements, etc.						
(7) Miscellaneous:						
Repairs to Equipment						
Sampling and Analysis						
Payroll Taxes						
Liability Insurance						
(8) Contingencies (specify):						
TOTALS	3453.50	13,474.60	16,928.10	3453.50	13,474.60	16,928.10

I certify that the above bill is correct and just and that payment therefor has not been received.

Date 12/5/57 *Payee Clayton Silver Mines

Per [signature] Title Gen Mgr

*When a voucher is signed or receipted in the name of a company or corporation, the name of the person writing the company or corporate name, as well as the capacity in which he signs, must appear. For example: "John Doe Company, per John Smith, Secretary," or "Treasurer," as the case may be.

NOTE.—Title 18, U. S. Code (Crimes), section 1001, makes it a criminal offense to make a willfully false statement or representation to any department or agency of the United States as to any matter within its jurisdiction.

(Instructions on reverse)

Pursuant to authority vested in me, I certify that this account is correct and proper for payment in the amount of:

$ 1726.75

Signature Dorothy F. Lowry
(Authorized Certifying Officer)

Date 12/11/57 Vou. No. 2087

(See other side)

(For Government use only)

CERTIFICATION BY GOVERNMENT REPRESENTATIVE:

I certify that to the best of my knowledge and belief the contractor submitting this voucher is operating a Defense Minerals Exploration Administration project under Contract No. 6 1108 in accordance with the terms of the contract.

Signature /s/ Stephen W. Zelesk Title Mining Engr. Date 12-10-57

APPROVAL BY DMEA EXECUTIVE OFFICER OR ALTERNATE:

Signature /s/ A. E. Weissenborn Title Exec. Officer Date Dec. 10, 1957

MONTHLY REPORT OF OPERATOR

The Operator (Contractor) of an exploration project is required to make a monthly report to the Government through the Regional Executive Officer. This report consists of three parts as follows:

(a) *Form MF-104—Operator's Monthly Report and Voucher.*—This form details expenditures and constitutes a voucher for reimbursing the Operator for the Government's share of costs;

(b) *Form MF-104A—Operator's Unit Cost and Progress Report.*—This is a statistical report of expenditures which shows costs for the various types of operation; and

(c) *Narrative.*—A concise narrative description of progress made, results accomplished, and any unusual difficulties encountered must be furnished as an attachment to this Report and Voucher. Wherever possible, the narrative is to be illustrated with maps or sketches showing formations penetrated and location and assays of samples taken as well as advances in workings. In the case of diamond drilling or churn drilling, the location and inclination of holes is to be shown on a map; logs and assays also are to be submitted.

The Monthly Report of Operator should be prepared in an original and four copies all of which must be sent to the Executive Officer of the Region not later than the 15th of the month following.

Preparation of Form MF-104—Operator's Monthly Report and Voucher.—All the applicable spaces in Form MF-104 should be filled in by the Operator, and the Operator or his agent should sign the certification in the lower left corner of the form.

The items of costs are arranged in the order they appear in Article 6 (a) of Form MF-200 (Revised February 1952), however, this form is readily adaptable for use in reporting activities under other contract forms.

Under Item (1) delete words "Short Form" if the contract is a sub-contract under Form MF-200; and delete word "Independent" if the contract reported is on Form MF-200 (A). Also, report work paid for on a unit basis under contract Form MF-200 as though it were performed under an independent contract.

Under Item (2) include labor, supervision and technical services incurred for the exploratory operations. Do not include labor, supervision and technical services used for work performed under items (5) and (6).

Under Item (3) include the costs of material and supplies used in the project other than that used under items (5) and (6).

Under Item (4) appear the three types of operating equipment expenditures, that is, rental, purchase and depreciation. The expenditures made for renting equipment belonging to a third party will be reported under "Rental". The amount paid or duly obligated for payment for the purchase of equipment will be reported under "Purchase". The amount of expenditures due the Operator to reimburse him for depreciation of equipment owned will be reported under "Depreciation".

Item (5) comprises costs of labor, supervision, technical services, materials, etc., which are used in the initial rehabilitation and repair of existing buildings, installations, fixtures, and equipment. These costs, therefore, should not be reported under items (2) and (3).

Item (6) includes the labor, supervision, technical services, materials, etc., used in the installation or construction of new buildings, fixed improvements, etc., necessary for the project. These costs, therefore, should not be reported under items (2) and (3).

Item (7) covers miscellaneous types of expenditure such as payroll taxes, liability insurance, workmen's compensation insurance, repairs to equipment and sampling and analysis. Only that part of payroll taxes, liability insurance and workmen's compensation which are paid by the operator should be reported under item (7). The share paid by the employee as a payroll deduction is to be included under item (2) as labor costs.

Item (8) includes any unforeseen costs not included in the other seven categories.

The original of Form MF-104 when submitted for reimbursable expenses incurred under contract Form MF-200 must be supported by original documentation or by certified copies of purchase orders, payrolls or transcripts of payrolls, unless such documentation has been waived by the Regional Executive Officer. This certification may be stated thus, "Certified True Copy (or Transcript)", followed by appropriate signature. If the Executive Officer of the Region determines that a contract under Form MF-200 should have an "on-site" audit, that is, a Government auditor should make an audit of the Operator's books and records of account, the Operator need not support his monthly voucher with original or certified documents except in cases of equipment purchases whose individual costs exceed $50.00. In these cases the original or a certified copy of the purchase order or invoice should be attached to the Monthly Voucher. N. B.—Only the *original* of Form MF-104 is required to be documented. The four copies of Form MF-104 are not to be thus supported.

Form MF-104 submitted for reimbursement under fixed price contracts on Form MF-200 (A), however, are not required to be supported by documentation of any kind. The Operator will submit his claim under item (1) of Form MF-104 by deleting as stated above the word "Independent" and by showing the number of feet or other units immediately after the appropriate descriptive word, such as, drilling, bulldozing, crosscutting, drifting, etc., and giving the "Monthly Total" amount due. "Totals Previously Reported", and "Totals to Date" columns should also be filled in.

Form MF-104A
(April 1952)

Budget Bureau No. 42-R1151.2

UNITED STATES
DEPARTMENT OF THE INTERIOR
DEFENSE MINERALS EXPLORATION ADMINISTRATION
OPERATOR'S UNIT COST AND PROGRESS REPORT

Month of Nov 1957 Docket No. DMEA 4659 Contract No. 1108
Operator's Name Clayton Silver Mines Minerals Pb - Zn
Address Kellogg, Idaho

OPERATION	UNIT	COSTS THIS MONTH	UNITS THIS MONTH	COSTS TO DATE	UNITS TO DATE	UNIT COSTS TO DATE	AUTHORIZED BY CONTRACT	
							Units	Unit Costs
Drifting								
Crosscutting								
Raising								
Shafts	Ft	3,203.50	21.5	15,928.10	106.9	$149.	300	$149.
Winzes								
Drilling: Core								
Churn								
Auger								
Stripping								
Trenching								
Test Pits								
Roads and Trails								
		~~3203.50~~						
TOTAL DISTRIBUTED COSTS		3203 50		15,928.10				TOTAL COSTS AUTHORIZED BY CONTRACT
Operating Equipment Purchased								
Initial Rehabilitation and Repairs								
New Buildings, Improvements, etc.								
Engineering		250		1,000.-				5,750
TOTAL COSTS		3453.50		16,928.10				130,840

The undersigned company, and the official executing this certification on its behalf, hereby certify that the information contained in this report is correct and complete to the best of their knowledge and belief.

Date 12/5/57 Operator Clayton Silver Mines

Per M. M. Smith Title Gen Mgr.

NOTE.—Title 18, U. S. Code (Crimes), section 1001, makes it a criminal offense to make a willfully false statement or representation to any department or agency of the United States as to any matter within its jurisdiction.

REMARKS:

(Instructions on reverse)

(For Government use only)

12-10-57
L. W. Goldsk
Mining Engr.

INSTRUCTIONS

Preparation of Form MF-104A—Operator's Unit Cost and Progress Report.—Applicable places on Form 104A should be filled in by the Operator. The purpose of this form is twofold as follows: (1) to furnish the supervising engineers and other administrators with statistical information necessary to better determine the progress of the project; and (2) to furnish more permanent information on mining costs for future use. The more important phases of operation on which permanent information is desired have been outlined in the form. There are blank lines, however, for those unusual phases which may need to be reported for a particular project. It will be necessary for the Operator to distribute his costs among the applicable phases reported with the exception of three items the costs of which are not to be distributed by the Operator. These three items are: "Operating Equipment Purchased", "Initial Rehabilitation and Repairs", and "New Buildings, Improvements, etc." The reason for not distributing these items on a monthly basis is doubtless clear to the Operator, since such distribution might well overstate the cost for any one month or period short of the entire contract period.

Form MF-104A has been designed to tie in with Form MF-104 for both monthly and cumulative costs. The "Total Costs" on Form MF-104A for each month should equal the monthly "Total Costs" as reported on Form MF-104. This is also true of the "Total Costs To Date".

In preparing Form MF-104A, it will be necessary frequently to distribute certain costs over a number of items. For instance, supervisory and engineering costs may have to be distributed over several phases, such as, drifting, crosscutting, raising, etc., provided that these items were reported active for the month. Such distributions should be made on the basis of time spent on the various phases, on man days of labor charged to such phases, or on some other equitable basis. "Operating Equipment", "Initial Rehabilitation and Repairs", and "New Buildings Improvements, etc.", will be distributed to the several phases of the project by the Washington Office of DMEA at the close of the project if determined necessary. The last two columns headed "Authorized by Contract" will be filled in by the Operator if such information is found in the contract. This information is usually a part of Exhibit "A" of the contract. A space for remarks has been provided for the use of the Operator to call attention to any unusual circumstances causing excessive or disproportionate unit costs.

GPO 872894

CLAYTON SILVER MINES

Docket No. DMEA-4659
Contract No. Idm-E1108

NARRATIVE

Month of November 1957

The Clayton shaft was sunk during the month of November 1957 a distance of 21.5 feet from 167.4 feet to 188.9 feet below 500-level sill.

392 cubic feet were excavated on the west side of shaft between 26' and 33½' below 700 sill for a 7' x 8' x 7' loading pocket.

Have had occasional water trouble in the bottom from plugged suction, kinked hose etc.

Have installed a 25-h.p. pump on 700-level for shaft water pumping.

Submitted by:

Norman M. Smith

ORIGINAL FILE COPY
DMEA
RECEIVED DEC 16 1957

Form MF-104 (Rev.)
(April 1952)

Budget Bureau No. 42-R1036.5

UNITED STATES
DEPARTMENT OF THE INTERIOR
DEFENSE MINERALS EXPLORATION ADMINISTRATION

RECEIVED NOV 18 1957 D.M.E.A.

OPERATOR'S MONTHLY REPORT AND VOUCHER

Month of October, 1957 Docket No. DMEA 4659 Contract No. E 1108

Operator's Name Clayton Silver Mines Minerals Pb - Zn

Address Kellogg, Idaho

Contract Amount, $ 130,840 Government Participation: 50% Amount, $ 65,420

ITEMS OF COSTS	FOR OPERATOR'S USE			FOR GOVERNMENT USE ONLY		
	Monthly Total	Totals Previously Reported	Totals To Date	Approved Monthly Total	Approved Totals Previously Reported	Approved Totals To Date
(1) Independent / Short Form Contracts:						
Drilling						
Bulldozing						
Crosscutting						
Drifting						
Shaft Sinking	1261.60	11,473.00	12,724.60	1251.60	11,473.00	12,724.60
(2) Labor and Supervision:						
Labor						
Supervision						
Technical Services	250.—	500.—	750.—	250.00	500.00	750.00
(3) Operating Mat'ls. and Supplies:						
Timber						
Explosives						
Pipe						
Track						
(4) Operating Equipment:						
Rental						
Purchase						
Depreciation						
(5) Initial Rehabilitation and Repairs						
(6) New Bldgs., Improvements, etc.						
(7) Miscellaneous:						
Repairs to Equipment						
Sampling and Analysis						
Payroll Taxes						
Liability Insurance						
(8) Contingencies (specify):						
TOTALS	1501.60	11,973.00	13,474.60	1501.60	11,973.00	13,474.60

I certify that the above bill is correct and just and that payment therefor has not been received.

Date 11/4/57 *Payee Clayton Silver Mines

Per [signature] Title Gen Mgr.

*When a voucher is signed or receipted in the name of a company or corporation, the name of the person writing the company or corporate name, as well as the capacity in which he signs, must appear. For example: "John Doe Company, per John Smith, Secretary," or "Treasurer," as the case may be.

NOTE.—Title 18, U. S. Code (Crimes), section 1001, makes it a criminal offense to make a willfully false statement or representation to any department or agency of the United States as to any matter within its jurisdiction.

(Instructions on reverse)

Pursuant to authority vested in me, I certify that this account is correct and proper for payment in the amount of:

$ 750.80

Signature [signature]
(Authorized Certifying Officer)

Date 11/14/57 Vou. No. 2069

(See other side)

(For Government use only)

CERTIFICATION BY GOVERNMENT REPRESENTATIVE:

I certify that to the best of my knowledge and belief the contractor submitting this voucher is operating a Defense Minerals Exploration Administration project under Contract No. E 1108 in accordance with the terms of the contract.

Signature /s/ William M. Romiche Title Mining Engr. Date 11/8/57

APPROVAL BY DMEA EXECUTIVE OFFICER OR ALTERNATE:

Signature /s/ A. E. Weissenborn Title Exec. Officer Date Nov. 12, 1957

MONTHLY REPORT OF OPERATOR

The Operator (Contractor) of an exploration project is required to make a monthly report to the Government through the Regional Executive Officer. This report consists of three parts as follows:

(a) *Form MF-104—Operator's Monthly Report and Voucher.*—This form details expenditures and constitutes a voucher for reimbursing the Operator for the Government's share of costs;

(b) *Form MF-104A—Operator's Unit Cost and Progress Report.*—This is a statistical report of expenditures which shows costs for the various types of operation; and

(c) *Narrative.*—A concise narrative description of progress made, results accomplished, and any unusual difficulties encountered must be furnished as an attachment to this Report and Voucher. Wherever possible, the narrative is to be illustrated with maps or sketches showing formations penetrated and location and assays of samples taken as well as advances in workings. In the case of diamond drilling or churn drilling, the location and inclination of holes is to be shown on a map; logs and assays also are to be submitted.

The Monthly Report of Operator should be prepared in an original and four copies all of which must be sent to the Executive Officer of the Region not later than the 15th of the month following.

Preparation of Form MF-104—Operator's Monthly Report and Voucher.—All the applicable spaces in Form MF-104 should be filled in by the Operator, and the Operator or his agent should sign the certification in the lower left corner of the form.

The items of costs are arranged in the order they appear in Article 6 (a) of Form MF-200 (Revised February 1952), however, this form is readily adaptable for use in reporting activities under other contract forms.

Under Item (1) delete words "Short Form" if the contract is a sub-contract under Form MF-200; and delete word "Independent" if the contract reported is on Form MF-200 (A). Also, report work paid for on a unit basis under contract Form MF-200 as though it were performed under an independent contract.

Under Item (2) include labor, supervision and technical services incurred for the exploratory operations. Do not include labor, supervision and technical services used for work performed under items (5) and (6).

Under Item (3) include the costs of material and supplies used in the project other than that used under items (5) and (6).

Under Item (4) appear the three types of operating equipment expenditures, that is, rental, purchase and depreciation. The expenditures made for renting equipment belonging to a third party will be reported under "Rental". The amount paid or duly obligated for payment for the purchase of equipment will be reported under "Purchase". The amount of expenditures due the Operator to reimburse him for depreciation of equipment owned will be reported under "Depreciation".

Item (5) comprises costs of labor, supervision, technical services, materials, etc., which are used in the initial rehabilitation and repair of existing buildings, installations, fixtures, and equipment. These costs, therefore, should not be reported under items (2) and (3).

Item (6) includes the labor, supervision, technical services, materials, etc., used in the installation or construction of new buildings, fixed improvements, etc., necessary for the project. These costs, therefore, should not be reported under items (2) and (3).

Item (7) covers miscellaneous types of expenditure such as payroll taxes, liability insurance, workmen's compensation insurance, repairs to equipment and sampling and analysis. Only that part of payroll taxes, liability insurance and workmen's compensation which are paid by the operator should be reported under item (7). The share paid by the employee as a payroll deduction is to be included under item (2) as labor costs.

Item (8) includes any unforeseen costs not included in the other seven categories.

The original of Form MF-104 when submitted for reimbursable expenses incurred under contract Form MF-200 must be supported by original documentation or by certified copies of purchase orders, payrolls or transcripts of payrolls, unless such documentation has been waived by the Regional Executive Officer. This certification may be stated thus, "Certified True Copy (or Transcript)", followed by appropriate signature. If the Executive Officer of the Region determines that a contract under Form MF-200 should have an "on-site" audit, that is, a Government auditor should make an audit of the Operator's books and records of account, the Operator need not support his monthly voucher with original or certified documents except in cases of equipment purchases whose individual costs exceed $50.00. In these cases the original or a certified copy of the purchase order or invoice should be attached to the Monthly Voucher. N. B.—Only the *original* of Form MF-104 is required to be documented. The four copies of Form MF-104 are not to be thus supported.

Form MF-104 submitted for reimbursement under fixed price contracts on Form MF-200 (A), however, are not required to be supported by documentation of any kind. The Operator will submit his claim under item (1) of Form MF-104 by deleting as stated above the word "Independent" and by showing the number of feet or other units immediately after the appropriate descriptive word, such as, drilling, bulldozing, crosscutting, drifting, etc., and giving the "Monthly Total" amount due. "Totals Previously Reported", and "Totals to Date" columns should also be filled in.

Form MF-104A
(April 1952)

Budget Bureau No. 42-R1151.2

RECEIVED NOV 15 1957 D.M.E.A.

UNITED STATES
DEPARTMENT OF THE INTERIOR
DEFENSE MINERALS EXPLORATION ADMINISTRATION
OPERATOR'S UNIT COST AND PROGRESS REPORT

Month of Oct. 1957 Docket No. DMEA 4659 Contract No. 1108
Operator's Name Clayton Silver Mines Minerals Pb - Zn
Address Kellogg, Idaho

OPERATION	UNIT	COSTS THIS MONTH	UNITS THIS MONTH	COSTS TO DATE	UNITS TO DATE	UNIT COSTS TO DATE	AUTHORIZED BY CONTRACT Units	AUTHORIZED BY CONTRACT Unit Costs
Drifting								
Crosscutting								
Raising								
Shafts	Ft.	1251.60	8.4	12,724.60	85.4	$149.	300	$149.
Winzes								
Drilling: Core								
Churn								
Auger								
Stripping								
Trenching								
Test Pits								
Roads and Trails								
TOTAL DISTRIBUTED COSTS		1,251.60		12,724.60				TOTAL COSTS AUTHORIZED BY CONTRACT
Operating Equipment Purchased								
Initial Rehabilitation and Repairs								
New Buildings, Improvements, etc.								
Engineering		250.		750.00				5,750
TOTAL COSTS		1501.60		13,474.60				130,840

The undersigned company, and the official executing this certification on its behalf, hereby certify that the information contained in this report is correct and complete to the best of their knowledge and belief.

Date 11/4/57 Operator Clayton Silver Mines

Per [signature] Title Gen. Mgr.

NOTE.—Title 18, U. S. Code (Crimes), section 1001, makes it a criminal offense to make a willfully false statement or representation to any department or agency of the United States as to any matter within its jurisdiction.

REMARKS:

(Instructions on reverse)

(For Government use only)

/s/ William M. Romeicke 11/8/57

INSTRUCTIONS

Preparation of Form MF-104A—Operator's Unit Cost and Progress Report.—Applicable places on Form 104A should be filled in by the Operator. The purpose of this form is twofold as follows: (1) to furnish the supervising engineers and other administrators with statistical information necessary to better determine the progress of the project; and (2) to furnish more permanent information on mining costs for future use. The more important phases of operation on which permanent information is desired have been outlined in the form. There are blank lines, however, for those unusual phases which may need to be reported for a particular project. It will be necessary for the Operator to distribute his costs among the applicable phases reported with the exception of three items the costs of which are not to be distributed by the Operator. These three items are: "Operating Equipment Purchased", "Initial Rehabilitation and Repairs", and "New Buildings, Improvements, etc." The reason for not distributing these items on a monthly basis is doubtless clear to the Operator, since such distribution might well overstate the cost for any one month or period short of the entire contract period.

Form MF-104A has been designed to tie in with Form MF-104 for both monthly and cumulative costs. The "Total Costs" on Form MF-104A for each month should equal the monthly "Total Costs" as reported on Form MF-104. This is also true of the "Total Costs To Date".

In preparing Form MF-104A, it will be necessary frequently to distribute certain costs over a number of items. For instance, supervisory and engineering costs may have to be distributed over several phases, such as, drifting, crosscutting, raising, etc., provided that these items were reported active for the month. Such distributions should be made on the basis of time spent on the various phases, on man days of labor charged to such phases, or on some other equitable basis. "Operating Equipment", "Initial Rehabilitation and Repairs", and "New Buildings Improvements, etc.", will be distributed to the several phases of the project by the Washington Office of DMEA at the close of the project if determined necessary. The last two columns headed "Authorized by Contract" will be filled in by the Operator if such information is found in the contract. This information is usually a part of Exhibit "A" of the contract. A space for remarks has been provided for the use of the Operator to call attention to any unusual circumstances causing excessive or disproportionate unit costs.

GPO 872894

CLAYTON SILVER MINES

Docket No. DMEA-4659
Contract No. Idm-E 1108

NARRATIVE

Month of October 1957

The Clayton Shaft was sunk during the month of October 1957 a distance of only 8.4 feet, from 159 feet to 167.4 feet below 500-level sill.

The 700 station sill was established at 150 feet below 500-sill. This station was excavated 26.1 feet on the west side of the shaft and one round each to the North and South was blasted.

Station excavation consisted of 1716 cu. ft., drifting amounted to 6.0 feet south and 6.5 feet north.

Absenteeism during the month was high due to allowable vacations and to sickness.

Of the 108 possible man shifts available 46 were lost time, 40 were expended on 700 station and 22 were used in the shaft.

Submitted by:

Norman M. Smith

Norman M. Smith

Form MF-104 (Rev.)
(April 1952)

Budget Bureau No. 42-R1036.5

UNITED STATES
DEPARTMENT OF THE INTERIOR
DEFENSE MINERALS EXPLORATION ADMINISTRATION
OPERATOR'S MONTHLY REPORT AND VOUCHER

Month of September, 1957 Docket No. DMEA 4659 Contract No. 1108
Operator's Name Clayton Silver Mines Minerals Lead & Zinc
Address Kellogg, Idaho
Contract Amount, $ 130,840 Government Participation: 50% Amount, $ 65,420

ITEMS OF COSTS	FOR OPERATOR'S USE			FOR GOVERNMENT USE ONLY		
	Monthly Total	Totals Previously Reported	Totals To Date	Approved Monthly Total	Approved Totals Previously Reported	Approved Totals To Date
(1) Independent Short Form Contracts:						
Drilling						
Bulldozing						
Crosscutting						
Drifting						
Shaft Sinking	3576	7,897	11,473	3576.00	7897.00	11,473.00
(2) Labor and Supervision:						
Labor						
Supervision						
Technical Services	250	250	500	250.00	250.00	500.00
(3) Operating Mat'ls. and Supplies:						
Timber						
Explosives						
Pipe						
Track						
(4) Operating Equipment:						
Rental						
Purchase						
Depreciation						
(5) Initial Rehabilitation and Repairs						
(6) New Bldgs., Improvements, etc.						
(7) Miscellaneous:						
Repairs to Equipment						
Sampling and Analysis						
Payroll Taxes						
Liability Insurance						
(8) Contingencies (specify):						
TOTALS	3826	8,147	11,973	3826.00	8147.00	11,973.00

I certify that the above bill is correct and just and that payment therefor has not been received.

Date 10-7-57 *Payee Clayton Silver Mines

Per Norman M. Smith Title Gen. Mgr.

*When a voucher is signed or receipted in the name of a company or corporation, the name of the person writing the company or corporate name, as well as the capacity in which he signs, must appear. For example: "John Doe Company, per John Smith, Secretary," or "Treasurer," as the case may be.

→ NOTE.—Title 18, U. S. Code (Crimes), section 1001, makes it a criminal offense to make a willfully false statement or representation to any department or agency of the United States as to any matter within its jurisdiction.

(Instructions on reverse)

Pursuant to authority vested in me, I certify that this account is correct and proper for payment in the amount of:

$ 1913.00

Signature Dorothy F. Long
(Authorized Certifying Officer)

Date 10/17/57 Vou. No. 2057
(See other side)

(For Government use only)

CERTIFICATION BY GOVERNMENT REPRESENTATIVE:

I certify that to the best of my knowledge and belief the contractor submitting this voucher is operating a Defense Minerals Exploration Administration project under Contract No. E-1108 in accordance with the terms of the contract.

Signature /s/ William M. Ramicke Title Mining Engineer Date 10/14/57

APPROVAL BY DMEA EXECUTIVE OFFICER OR ALTERNATE:

Signature /s/ A. E. Weissenborn Title Exec. Officer Date 10/15/57

MONTHLY REPORT OF OPERATOR

The Operator (Contractor) of an exploration project is required to make a monthly report to the Government through the Regional Executive Officer. This report consists of three parts as follows:

(a) *Form MF-104—Operator's Monthly Report and Voucher.*—This form details expenditures and constitutes a voucher for reimbursing the Operator for the Government's share of costs;

(b) *Form MF-104A—Operator's Unit Cost and Progress Report.*—This is a statistical report of expenditures which shows costs for the various types of operation; and

(c) *Narrative.*—A concise narrative description of progress made, results accomplished, and any unusual difficulties encountered must be furnished as an attachment to this Report and Voucher. Wherever possible, the narrative is to be illustrated with maps or sketches showing formations penetrated and location and assays of samples taken as well as advances in workings. In the case of diamond drilling or churn drilling, the location and inclination of holes is to be shown on a map; logs and assays also are to be submitted.

The Monthly Report of Operator should be prepared in an original and four copies all of which must be sent to the Executive Officer of the Region not later than the 15th of the month following.

Preparation of Form MF-104—Operator's Monthly Report and Voucher.—All the applicable spaces in Form MF-104 should be filled in by the Operator, and the Operator or his agent should sign the certification in the lower left corner of the form.

The items of costs are arranged in the order they appear in Article 6 (a) of Form MF-200 (Revised February 1952), however, this form is readily adaptable for use in reporting activities under other contract forms.

Under Item (1) delete words "Short Form" if the contract is a sub-contract under Form MF-200; and delete word "Independent" if the contract reported is on Form MF-200 (A). Also, report work paid for on a unit basis under contract Form MF-200 as though it were performed under an independent contract.

Under Item (2) include labor, supervision and technical services incurred for the exploratory operations. Do not include labor, supervision and technical services used for work performed under items (5) and (6).

Under Item (3) include the costs of material and supplies used in the project other than that used under items (5) and (6).

Under Item (4) appear the three types of operating equipment expenditures, that is, rental, purchase and depreciation. The expenditures made for renting equipment belonging to a third party will be reported under "Rental". The amount paid or duly obligated for payment for the purchase of equipment will be reported under "Purchase". The amount of expenditures due the Operator to reimburse him for depreciation of equipment owned will be reported under "Depreciation".

Item (5) comprises costs of labor, supervision, technical services, materials, etc., which are used in the initial rehabilitation and repair of existing buildings, installations, fixtures, and equipment. These costs, therefore, should not be reported under items (2) and (3).

Item (6) includes the labor, supervision, technical services, materials, etc., used in the installation or construction of new buildings, fixed improvements, etc., necessary for the project. These costs, therefore, should not be reported under items (2) and (3).

Item (7) covers miscellaneous types of expenditure such as payroll taxes, liability insurance, workmen's compensation insurance, repairs to equipment and sampling and analysis. Only that part of payroll taxes, liability insurance and workmen's compensation which are paid by the operator should be reported under item (7). The share paid by the employee as a payroll deduction is to be included under item (2) as labor costs.

Item (8) includes any unforeseen costs not included in the other seven categories.

The original of Form MF-104 when submitted for reimbursable expenses incurred under contract Form MF-200 must be supported by original documentation or by certified copies of purchase orders, payrolls or transcripts of payrolls, unless such documentation has been waived by the Regional Executive Officer. This certification may be stated thus, "Certified True Copy (or Transcript)", followed by appropriate signature. If the Executive Officer of the Region determines that a contract under Form MF-200 should have an "on-site" audit, that is, a Government auditor should make an audit of the Operator's books and records of account, the Operator need not support his monthly voucher with original or certified documents except in cases of equipment purchases whose individual costs exceed $50.00. In these cases the original or a certified copy of the purchase order or invoice should be attached to the Monthly Voucher. N. B.—Only the *original* of Form MF-104 is required to be documented. The four copies of Form MF-104 are not to be thus supported.

Form MF-104 submitted for reimbursement under fixed price contracts on Form MF-200 (A), however, are not required to be supported by documentation of any kind. The Operator will submit his claim under item (1) of Form MF-104 by deleting as stated above the word "Independent" and by showing the number of feet or other units immediately after the appropriate descriptive word, such as, drilling, bulldozing, crosscutting, drifting, etc., and giving the "Monthly Total" amount due. "Totals Previously Reported", and "Totals to Date" columns should also be filled in.

Form MF-104A
(April 1952)

Budget Bureau No. 42-R1151.2

UNITED STATES
DEPARTMENT OF THE INTERIOR

DEFENSE MINERALS EXPLORATION ADMINISTRATION

OPERATOR'S UNIT COST AND PROGRESS REPORT

Month of Sept. 1957 Docket No. DMEA 4659 Contract No. 1108
Operator's Name Clayton Silver Mines Minerals Lead & Zinc
Address Kellogg, Idaho

OPERATION	Unit	Costs This Month	Units This Month	Costs to Date	Units to Date	Unit Costs to Date	Authorized by Contract: Units	Authorized by Contract: Unit Costs
Drifting								
Crosscutting								
Raising								
Shafts	Ft.	3576	24	11,473	77	149	300	149
Winzes								
Drilling: Core								
Churn								
Auger								
Stripping								
Trenching								
Test Pits								
Roads and Trails								
Total Distributed Costs		3576		11,473				Total Costs Authorized by Contract
Operating Equipment Purchased								
Initial Rehabilitation and Repairs								
New Buildings, Improvements, etc.								
Engineering		250		500				5750
Total Costs		3826		11,973				130,840

The undersigned company, and the official executing this certification on its behalf, hereby certify that the information contained in this report is correct and complete to the best of their knowledge and belief.

Date 10-7-57 Operator Clayton Silver Mines

Per Norman M. Smith Title Gen Mgr.

NOTE.—Title 18, U. S. Code (Crimes), section 1001, makes it a criminal offense to make a willfully false statement or representation to any department or agency of the United States as to any matter within its jurisdiction.

(Instructions on reverse)

Remarks: An error was reported for total costs in Aug. 1947

Total should have been 8,147
Total reported 8127
Error was 20.

(For Government use only)

/s/ William M. Romeiser, 10/14/57

INSTRUCTIONS

Preparation of Form MF-104A—Operator's Unit Cost and Progress Report.—Applicable places on Form 104A should be filled in by the Operator. The purpose of this form is twofold as follows: (1) to furnish the supervising engineers and other administrators with statistical information necessary to better determine the progress of the project; and (2) to furnish more permanent information on mining costs for future use. The more important phases of operation on which permanent information is desired have been outlined in the form. There are blank lines, however, for those unusual phases which may need to be reported for a particular project. It will be necessary for the Operator to distribute his costs among the applicable phases reported with the exception of three items the costs of which are not to be distributed by the Operator. These three items are: "Operating Equipment Purchased", "Initial Rehabilitation and Repairs", and "New Buildings, Improvements, etc." The reason for not distributing these items on a monthly basis is doubtless clear to the Operator, since such distribution might well overstate the cost for any one month or period short of the entire contract period.

Form MF-104A has been designed to tie in with Form MF-104 for both monthly and cumulative costs. The "Total Costs" on Form MF-104A for each month should equal the monthly "Total Costs" as reported on Form MF-104. This is also true of the "Total Costs To Date".

In preparing Form MF-104A, it will be necessary frequently to distribute certain costs over a number of items. For instance, supervisory and engineering costs may have to be distributed over several phases, such as, drifting, crosscutting, raising, etc., provided that these items were reported active for the month. Such distributions should be made on the basis of time spent on the various phases, on man days of labor charged to such phases, or on some other equitable basis. "Operating Equipment", "Initial Rehabilitation and Repairs", and "New Buildings Improvements, etc.", will be distributed to the several phases of the project by the Washington Office of DMEA at the close of the project if determined necessary. The last two columns headed "Authorized by Contract" will be filled in by the Operator if such information is found in the contract. This information is usually a part of Exhibit "A" of the contract. A space for remarks has been provided for the use of the Operator to call attention to any unusual circumstances causing excessive or disproportionate unit costs.

GPO 872894

CLAYTON SILVER MINES

Docket No. DMEA-4659
Contract No. Idm-E 1108

NARRATIVE
Month of September 1957

The Clayton Shaft was sunk during the month of September 1957 from 135 feet to 159 feet below the 500-level sill, a distance of 24 feet. Progress during this period has been somewhat held up by the absence of one of the best men on the sinking crew.

Since the project began, 9 regular sets of shaft timber have been installed; 6 sets in August and 3 sets in September. In addition the 700-level station set (13-ft.) was installed in September.

The rock penetrated was black, unaltered dolomite, exhibiting some fracturing in the 700-level station set.

Accompanying this report is a section map of the shaft showing progress dates.

Submitted by:

Norman M. Smith

Norman M. Smith

Form MF-104 (Rev.) (April 1952)

RECEIVED BUREAU OF MINES SEP 16 1957 SPOKANE, WASH.

Budget Bureau No. 42-R1036.5

UNITED STATES DEPARTMENT OF THE INTERIOR
DEFENSE MINERALS EXPLORATION ADMINISTRATION

RECEIVED

OPERATOR'S MONTHLY REPORT AND VOUCHER

Month of July & August, 1957 Docket No. DMEA 4659 Contract No. 1108

Operator's Name Clayton Silver Mines Minerals Lead-Zinc

Address Kellogg, Idaho

Contract Amount, $130,840. Government Participation 50 % Amount, $65,420

ITEMS OF COSTS	FOR OPERATOR'S USE: Monthly Total	Totals Previously Reported	Totals To Date	FOR GOVERNMENT USE ONLY: Approved Monthly Total	Approved Totals Previously Reported	Approved Totals To Date
(1) ~~Independent~~ Short Form Contracts:						
Drilling						
Bulldozing						
Crosscutting						
Drifting						
Shaft sinking	7,897.	none	7,897.	7897.00	—	7897.00
(2) Labor and Supervision:						
Labor						
Supervision						
Technical Services	250.		250.	250.00	—	250.00
(3) Operating Mat'ls. and Supplies:						
Timber						
Explosives						
Pipe						
Track						
(4) Operating Equipment:						
Rental						
Purchase						
Depreciation						
(5) Initial Rehabilitation and Repairs						
(6) New Bldgs., Improvements, etc.						
(7) Miscellaneous:						
Repairs to Equipment						
Sampling and Analysis						
Payroll Taxes						
Liability Insurance						
(8) Contingencies (specify):						
TOTALS	8,127	none	8,127	8147.00	—	8147.00

I certify that the above bill is correct and just and that payment therefor has not been received.

Date 9/13/57 *Payee Clayton Silver Mines

Per [signature] Title Gen. Mgr.

*When a voucher is signed or receipted in the name of a company or corporation, the name of the person writing the company or corporate name, as well as the capacity in which he signs, must appear. For example: "John Doe Company, per John Smith, Secretary," or "Treasurer," as the case may be.

NOTE.—Title 18, U. S. Code (Crimes), section 1001, makes it a criminal offense to make a willfully false statement or representation to any department or agency of the United States as to any matter within its jurisdiction.

(Instructions on reverse)

Pursuant to authority vested in me, I certify that this account is correct and proper for payment in the amount of:

4073.50

$ 4073.50

Signature Dorothy F. Fou (Authorized Certifying Officer)

Date 10/7/57 Vou. No. 2047

(See other side)

(For Government use only)

CERTIFICATION BY GOVERNMENT REPRESENTATIVE:

I certify that to the best of my knowledge and belief the contractor submitting this voucher is operating a Defense Minerals Exploration Administration project under Contract No. E 1108 in accordance with the terms of the contract.

Signature /s/ William M. Konischer Title Mining Engr. Date 9/24/57

APPROVAL BY DMEA EXECUTIVE OFFICER OR ALTERNATE:

Signature /s/ A. E. Weissenborn Title Exec. Officer Date Oct. 3, 1957

MONTHLY REPORT OF OPERATOR

The Operator (Contractor) of an exploration project is required to make a monthly report to the Government through the Regional Executive Officer. This report consists of three parts as follows:

(a) *Form MF-104—Operator's Monthly Report and Voucher.*—This form details expenditures and constitutes a voucher for reimbursing the Operator for the Government's share of costs;

(b) *Form MF-104A—Operator's Unit Cost and Progress Report.*—This is a statistical report of expenditures which shows costs for the various types of operation; and

(c) *Narrative.*—A concise narrative description of progress made, results accomplished, and any unusual difficulties encountered must be furnished as an attachment to this Report and Voucher. Wherever possible, the narrative is to be illustrated with maps or sketches showing formations penetrated and location and assays of samples taken as well as advances in workings. In the case of diamond drilling or churn drilling, the location and inclination of holes is to be shown on a map; logs and assays also are to be submitted.

The Monthly Report of Operator should be prepared in an original and four copies all of which must be sent to the Executive Officer of the Region not later than the 15th of the month following.

Preparation of Form MF-104—Operator's Monthly Report and Voucher.—All the applicable spaces in Form MF-104 should be filled in by the Operator, and the Operator or his agent should sign the certification in the lower left corner of the form.

The items of costs are arranged in the order they appear in Article 6 (a) of Form MF-200 (Revised February 1952), however, this form is readily adaptable for use in reporting activities under other contract forms.

Under Item (1) delete words "Short Form" if the contract is a sub-contract under Form MF-200; and delete word "Independent" if the contract reported is on Form MF-200 (A). Also, report work paid for on a unit basis under contract Form MF-200 as though it were performed under an independent contract.

Under Item (2) include labor, supervision and technical services incurred for the exploratory operations. Do not include labor, supervision and technical services used for work performed under items (5) and (6).

Under Item (3) include the costs of material and supplies used in the project other than that used under items (5) and (6).

Under Item (4) appear the three types of operating equipment expenditures, that is, rental, purchase and depreciation. The expenditures made for renting equipment belonging to a third party will be reported under "Rental". The amount paid or duly obligated for payment for the purchase of equipment will be reported under "Purchase". The amount of expenditures due the Operator to reimburse him for depreciation of equipment owned will be reported under "Depreciation".

Item (5) comprises costs of labor, supervision, technical services, materials, etc., which are used in the initial rehabilitation and repair of existing buildings, installations, fixtures, and equipment. These costs, therefore, should not be reported under items (2) and (3).

Item (6) includes the labor, supervision, technical services, materials, etc., used in the installation or construction of new buildings, fixed improvements, etc., necessary for the project. These costs, therefore, should not be reported under items (2) and (3).

Item (7) covers miscellaneous types of expenditure such as payroll taxes, liability insurance, workmen's compensation insurance, repairs to equipment and sampling and analysis. Only that part of payroll taxes, liability insurance and workmen's compensation which are paid by the operator should be reported under item (7). The share paid by the employee as a payroll deduction is to be included under item (2) as labor costs.

Item (8) includes any unforeseen costs not included in the other seven categories.

The original of Form MF-104 when submitted for reimbursable expenses incurred under contract Form MF-200 must be supported by original documentation or by certified copies of purchase orders, payrolls or transcripts of payrolls, unless such documentation has been waived by the Regional Executive Officer. This certification may be stated thus, "Certified True Copy (or Transcript)", followed by appropriate signature. If the Executive Officer of the Region determines that a contract under Form MF-200 should have an "on-site" audit, that is, a Government auditor should make an audit of the Operator's books and records of account, the Operator need not support his monthly voucher with original or certified documents except in cases of equipment purchases whose individual costs exceed $50.00. In these cases the original or a certified copy of the purchase order or invoice should be attached to the Monthly Voucher. N. B.—Only the *original* of Form MF-104 is required to be documented. The four copies of Form MF-104 are not to be thus supported.

Form MF-104 submitted for reimbursement under fixed price contracts on Form MF-200 (A), however, are not required to be supported by documentation of any kind. The Operator will submit his claim under item (1) of Form MF-104 by deleting as stated above the word "Independent" and by showing the number of feet or other units immediately after the appropriate descriptive word, such as, drilling, bulldozing, crosscutting, drifting, etc., and giving the "Monthly Total" amount due. "Totals Previously Reported", and "Totals to Date" columns should also be filled in.

Form MT-104A
(April 1952)

Budget Bureau No. 42-R1151.2

UNITED STATES
DEPARTMENT OF THE INTERIOR
DEFENSE MINERALS EXPLORATION ADMINISTRATION

RECEIVED OCT 14 1957 D.M.E.A.

OPERATOR'S UNIT COST AND PROGRESS REPORT

Month of July & Aug 1957 Docket No. DMEA 4659 Contract No. 1108

Operator's Name Clayton Silver Mines Minerals Lead-Zinc

Address Kellogg, Idaho

OPERATION	UNIT	COSTS THIS MONTH	UNITS THIS MONTH	COSTS TO DATE	UNITS TO DATE	UNIT COSTS TO DATE	AUTHORIZED BY CONTRACT Units	AUTHORIZED BY CONTRACT Unit Costs
Drifting								
Crosscutting								
Raising								
Shafts	Ft.	7,897	53 ft.	7,897	53 ft	149.	300	149.
Winzes								
Drilling: Core								
Churn								
Auger								
Stripping								
Trenching								
Test Pits								
Roads and Trails								
TOTAL DISTRIBUTED COSTS		7,897		7,897				TOTAL COSTS AUTHORIZED BY CONTRACT
Operating Equipment Purchased								
Initial Rehabilitation and Repairs								
New Buildings, Improvements, etc.								
Engineering - 1 mo.		250.		250.				5,750
TOTAL COSTS		8,127		8,127				130,420

The undersigned company, and the official executing this certification on its behalf, hereby certify that the information contained in this report is correct and complete to the best of their knowledge and belief.

Date Sept. 13, 1957 Operator Clayton Silver Mines

Per [signature] Title Gen. Mgr.

NOTE.—Title 18, U. S. Code (Crimes), section 1001, makes it a criminal offense to make a willfully false statement or representation to any department or agency of the United States as to any matter within its jurisdiction.

REMARKS: Shaft sinking began 7/19/57 (date of contract) thru Aug. an advance of 53 ft. in unaltered dolomite had been made. Sinking began 82' below 500 sill. At end of Aug. bottom was at 135' below 500 sill.
This report covers period July 19, 1957 thru Aug 31, 1957

(Instructions on reverse)

(For Government use only)

/s/ William M. Kamiscler 9/24/57

INSTRUCTIONS

Preparation of Form MF-104A—Operator's Unit Cost and Progress Report.—Applicable places on Form 104A should be filled in by the Operator. The purpose of this form is twofold as follows: (1) to furnish the supervising engineers and other administrators with statistical information necessary to better determine the progress of the project; and (2) to furnish more permanent information on mining costs for future use. The more important phases of operation on which permanent information is desired have been outlined in the form. There are blank lines, however, for those unusual phases which may need to be reported for a particular project. It will be necessary for the Operator to distribute his costs among the applicable phases reported with the exception of three items the costs of which are not to be distributed by the Operator. These three items are: "Operating Equipment Purchased", "Initial Rehabilitation and Repairs", and "New Buildings, Improvements, etc." The reason for not distributing these items on a monthly basis is doubtless clear to the Operator, since such distribution might well overstate the cost for any one month or period short of the entire contract period.

Form MF-104A has been designed to tie in with Form MF-104 for both monthly and cumulative costs. The "Total Costs" on Form MF-104A for each month should equal the monthly "Total Costs" as reported on Form MF-104. This is also true of the "Total Costs To Date".

In preparing Form MF-104A, it will be necessary frequently to distribute certain costs over a number of items. For instance, supervisory and engineering costs may have to be distributed over several phases, such as, drifting, crosscutting, raising, etc., provided that these items were reported active for the month. Such distributions should be made on the basis of time spent on the various phases, on man days of labor charged to such phases, or on some other equitable basis. "Operating Equipment", "Initial Rehabilitation and Repairs", and "New Buildings Improvements, etc.", will be distributed to the several phases of the project by the Washington Office of DMEA at the close of the project if determined necessary. The last two columns headed "Authorized by Contract" will be filled in by the Operator if such information is found in the contract. This information is usually a part of Exhibit "A" of the contract. A space for remarks has been provided for the use of the Operator to call attention to any unusual circumstances causing excessive or disproportionate unit costs.

GPO 872894

CLAYTON SILVER MINES

Docket No. DMEA-4659
Contract No. Idm-E1108

NARRATIVE
Period: July 19, 1957 through August 31, 1957

The Clayton shaft-sinking, under the above listed DMEA contract, began by blasting the first round in the bottom on July 19, 1957. The bottom before blasting measured at 82 feet below the 500-level sill. On September 1st the bottom measured at 135 feet below 500-sill. Progress during this period was 53 feet, all in unaltered dolomite.

There is the difficulty in handling the water made by sinking, but at Clayton, this is not considered unusual. The rocks penetrated are of the usual Clayton dolomites as seen throughout the hanging wall of the Clayton ore bodies.

Shaft timbering and necessary accessories have been installed as per Contract Exhibit A, Item No. 1.

Submitted by:

Norman M. Smith

Norman M. Smith

ORIGINAL FILE COPY
DMEA
RECEIVED

JAN 3 1961

Clayton Silver Mines
c/o Norman M. Smith, General Manager
Sunshine Star Route
Kellogg, Idaho

Re: IMEA-4639 (Lead-Zinc)
Clayton Silver Mines
Clayton Mine
Custer County, Idaho
Contract Idm-21103

Gentlemen:

By the terms of the subject Exploration Project Contract, as amended, and with reference to Amendment No. 2 and the clause in Annex I, "Special Undertaking Concerning Royalty," all minerals mined or produced from July 19, 1957, to July 19, 1968, are subject to the Government's percentage royalty as set forth in the contract until the sum of $64,630.20 is repaid to the Government.

Royalty payments should be made to the Field Officer, OMX, Region I, South 157 Howard Street, Spokane 4, Washington, by the purchaser, with checks drawn payable to the Office of Minerals Exploration. The purchaser should be advised to deduct royalties from the amount due on each shipment and send the check directly to the Field Officer. Each check should be accompanied by suitable sales evidence - such as copies of settlement sheets - showing the name of the purchaser, the quantity and grade of the products sold, and the price and charges, certified to be correct by the purchaser.

You are requested to notify the Field Officer of any changes in ownership or production rights that may have any effect on the Government's right to its percentage royalty. Your attention is called particularly to Article 2(e) of the contract relating to the Government's right to a percentage royalty on production. If production ceases for any extended period, please notify the Field Officer accordingly at six-month intervals.

Sincerely yours,

George C. Selfridge

Acting Director

JMAlt/gla
9-28-60

cc to: Director's Reading File
Frank E. Johnson
Review Committee
Harold Kirkham, USGS
Region I (2)
Docket
Contract Adm. & Audit Division
Code 500

AUG 10 1960

Memorandum

To: Acting Field Officer, Region I

From: ACTING Chief, Division of Field Operations

Subject: DMEA-4659 (Lead-Zinc)
Clayton Silver Mines
Clayton Mine
Custer County, Idaho
Contract Idm-21106

With reference to your memorandum of August 4 regarding the Operator's August 1 letter, there is no obligation for an operator to sign any amendment if it does not see fit to do so. On our part, we never extend royalty repayment periods for a fraction of a year as the Operator seems to desire.

Since you appear to be dubious as to the value of any future work, we may as well consider the contract as having been terminated July 19, 1960, under the provisions of Amendment No. 2. We are not clear regarding your statement, "This question is important as it would determine whether or not the contract was completed on or before July 19, and hence, whether or not the pseudocertification in item 3 of Amendment No. 2 is effective." Actually, as we understand the facts, the project work was incomplete to the extent of some 125 feet of drifting. Hence, there is no decision for us to make; the provisions of Amendment No. 2 become effective.

Please note that this contract, under Annex I, contains a royalty agreement providing for toll payments.

Please notify the Operator that it should submit its final account and final report at its earliest convenience.

W. R. Griswold

JWAlt/gla
8-10-60
cc to: Director's Reading File
Review Committee
CA&A Division
Docket
Chron

So. 157 Howard Street
Spokane 4, Washington
August 4, 1960

EXTRA COPY
O. M. E
RECEIVED AUG 8 1960

DATE	INITIALS	
		800

Memorandum

To: Chief, Division of Field Operations, OME

From: Acting Field Officer, Region I

Subject: DMEA 4659 (Lead-Zinc)
Clayton Silver Mines
Clayton Mine
Custer County, Idaho
Contract Idm-E1108

Enclosed are two copies of a letter dated August 1, 1960, from the subject Operator and our acknowledgment, along with the original and four copies of a proposed Amendment No. 3 which he returned unsigned. Also enclosed are two copies of a letter dated August 4, 1960, to R. J. Legard, General Superintendent, regarding a 5.1-foot discrepancy between our measurements of crosscutting and drifting and the amount vouchered.

As our measurements are made with a cloth metallic tape and the Operator's with a steel tape and plumb lines when he surveys his station points, the difference could be due to cumulative error, or it could be due to misreading a measurement. Mr. Legard should be able to pinpoint where the difference is and I will make a check measurement on my next inspection.

As the Operator does not wish to accept the amendment, the contract ended July 19, 1960, under the terms of Amendment No. 2. At that time there remained, according to my records, something over 125 feet of authorized drifting and crosscutting. In view of the possibilities mentioned in the fourth paragraph of my interim inspection report dated August 1, 1960, there is some question as to whether or not further drifting is warranted. This question is important as it would determine whether or not the contract was completed on or before July 19, and hence, whether or not the pseudocertification in item 3 of Amendment No. 2 is effective. Frankly, I doubt that further drifting will prove successful, but there is a possibility that it might. I would therefore appreciate hearing of your decision on this matter.

D. R. MacLaren

Enclosures
cc: DRF
MacLaren

EXTRA COPY
O. M. E
RECEIVED AUG 8 1960

DATE	INITIALS	CODE

Sc. 157 Howard Street
Spokane 4, Washington
August 4, 1960

Mr. Norman M. Smith
Clayton Silver Mines
Engineering Office
Sunshine Star Route
Kellogg, Idaho

Re: DMEA-4659 (Lead-Zinc)
Clayton Silver Mines
Clayton Mine
Custer County, Idaho
Contract No. Idm-E1108

Dear Mr. Smith:

This will acknowledge receipt of the unsigned original and four copies of a proposed Amendment No. 3 which you returned with your letter of August 1, 1960.

We are sorry that you do not find the proposed amendment acceptable. The clause extending the royalty payment period when contract termination dates have been extended has long been a DMEA policy, in order that the length of time in which the Government's right to receive royalty payments shall not be less than the potential production period remaining after the original completion date of the contract.

As of July 26, 1960, the date I last visited the property, our records show a total of 2,022.9 feet of drifting and crosscutting on the 800 level, whereas your June voucher showed a total claimed of 2,026 feet. Enclosed is a copy of a letter I have written to R. J. Legard asking him to check our figures with his so that the discrepancy can be rechecked and adjusted during my next visit.

Sincerely yours,

D. R. MacLaren
Acting Field Officer, OME
Region I

Enclosure
cc: OME(2)
DMF
MacLaren

EXTRA COPY
O. M. E
RECEIVED AUG 8 1960
DATE | INITIALS | CODE

So. 157 Howard Street
Spokane 4, Washington
August 4, 1960

Mr. R. J. Legard
General Superintendent
Clayton Silver Mines
Clayton, Idaho

Re: DMEA 4659 (Lead-Zinc)
Clayton Silver Mines
Clayton Mine
Custer County, Idaho
Contract No. Idm-E1108

Dear Mr. Legard:

As of July 26, 1960, the date of my last visit to the property, our records show a total drift and crosscut footage completed on the 800 level under the DMEA contract as being 2,022.9 feet. The amount claimed in the June voucher is 2,028 feet, a difference of 5.1 feet.

According to our records, advance in the 800 north drift was as follows:

IP	- Sta. 807	449.7	feet
Sta. 807	- 808	226.4	"
808	- 809	156.5	"
809	- 810	186.0	"
810	- 811	125.0	"
811	- 812	110.0	"
812	- 813	149.5	"
813	- 814	74.8	"
814	- 815	42.2	"
815	- 816	54.9	"
816	- Face 7/26/60	42.5	"
Total (800N Drift)		1,617.5	feet as of July 26, 1960

Total drifting and crosscutting on the 800 level according to our records are as follows:

South tail drift	35.0	feet
Southwest drift	136.3	"
803 XCW	45.0	"
804 XCW	40.5	"
813 XCW (formerly 805)	63.0	"
814 XCE	36.0	"
814 XCW	49.6	"
North drift	1,617.5	"
Total drifting and crosscutting	2,022.9	feet as of July 26, 1960

As this is 5.1 feet less than the total vouchered for June, I would appreciate it if you would check the above measurements, made by different people with a cloth metallic tape, against your surveyed distances so that the discrepancy can be rechecked and adjusted during my next inspection.

Sincerely yours,

D. R. MacLaren
Acting Field Officer, OME
Region X

cc: Norman M. Smith
General Manager
Kellogg, Idaho
OME(2)
MacLaren
DHF

CLAYTON SILVER MINES
ENGINEERING OFFICE
SUNSHINE STAR ROUTE
KELLOGG IDAHO

EXTRA COPY
O. M. E
RECEIVED AUG 8 1960

DATE	INITIALS	CODE

August 1, 1960

Mr. D. R. MacLaren
Acting Field Officer, OME, Region I
S. 157 Howard Street
Spokane 4, Washington

Re: Docket DMEA 4659
Contract No. Idm. E-1[illegible]

Dear Mr. MacLaren:

Enclosed I am returning unsigned the original and four copies of the proposed Amendment No. 3 to our contract.

I had asked for and was granted a three-month extension. This is very satisfactory. However, in this amendment the maximum period for royalty payment was increased by one full year. This is not satisfactory.

I have not yet heard from the mine on July footages. It is possible that most of the contract has been fulfilled by the expiration date. In that case we will close this project up and make our final report.

Sincerely yours,

NORMAN M. SMITH
General Manager

NMS
m

Enclosures

cc: Mr. R. J. Legard

RECEIVED
AUG 3 1960
U.S.B.M.
SPOKANE, WASH.

EXTRA COPY
O. M. E
RECEIVED MAY 16 1960

DATE	INITIALS	CODE
		800

So. 157 Howard Street
Spokane 4, Washington
May 11, 1960

Mr. Norman M. Smith
General Manager
Clayton Silver Mines
Sunshine Star Route
Kellogg, Idaho

Work Authorization
Re: Docket No. DMEA-4659 (Lead-Zinc)
Clayton Silver Mine
Custer County, Idaho
Contract No. Idm-E1168

Dear Mr. Smith:

Item 6, Exhibit A, of the referenced contract requires prior Government approval of the location, direction, and extent of long drilling. This was discussed with personnel at the mine during an interim inspection ~~report~~ after in December and authorization was given to drill either or both walls after the drift entered the ore zone as projected from the 300 level. Holes were not to be closer than 40 feet or longer than 50 feet. It was stated that holes at right angles to the drift would be more desirable, but to avoid cutting stations, they could be drilled at an angle.

I regret that written confirmation of the oral authorization was not made at the time.

Sincerely yours,

D. R. MacLaren
Acting Field Officer, OME
Region I

cc: OME(3)
USBM
MacLaren
DRF

Audit's copy

EXPLORATION PROJECT CONTRACT
CLAYTON SILVER MINES
DOCKET NO. DMEA-4659

AMENDMENT NO. 2

It is agreed this 4th day of August, 1959, between the United States of America, acting through the Department of the Interior, Office of Minerals Exploration, hereinafter called the "Government," and Clayton Silver Mines, an Arizona corporation, hereinafter called the "Operator," that Exploration Project Contract No. Idm-E1108, Docket No. DMEA-4659, dated July 19, 1957, as amended, is further amended as follows:

1. The date fixed in the Contract for completion of the work is extended from July 19, 1959, to July 19, 1960.

2. The maximum period for royalty payments provided for in Article 6(b) of the Contract is increased from 10 years to 11 years from the date of the Contract.

3. Effective July 19, 1960, if the Contract is not completed on or before that date, the Operator, as principal if the Operator is the producer, or as surety if the Operator is not the producer (for example, if the Operator either transfers or fails to retain its interest in the land), shall pay to the Government the royalty on production provided for in the Contract, in the same manner and amount and for the full period provided for in the Contract, as amended, as if certification of discovery or development had been made, such certification being hereby waived by the Operator. In addition, all rights of the Government provided for in the Contract with respect to a certification of discovery or development, and all rights of the Government as to reports (including preservation of the Operator's records), audit, and recovery of any overpayment are preserved.

This amendment shall not be construed to increase the estimated total cost of the project, the aggregate total amount which the Government may be required to contribute, or the fixed unit cost of any item of work.

Executed in quintuplicate the day and year first above written.

THE UNITED STATES OF AMERICA

By Frank E. Johnson
Acting Director, Office of
Minerals Exploration

CLAYTON SILVER MINES

By Norman M. Smith

Title General Manager

EXTRA COPY O. M. E. RECEIVED JUL 13 1959		
DATE	INITIALS	CODE
		800

So. 157 Howard Street
Spokane 4, Washington

July 7, 1959

Mr. Herman M. Smith
General Manager
Clayton Silver Mines
Submine Star Route
Kellogg, Idaho

Ref: Docket No. DMA-469 (Lead-Zinc)
Clayton Silver Mine
Custer County, Idaho
Contract Idm-51168

Dear Mr. Smith:

Article 1(a) of your DMA contract provides that the contract work shall be completed by July 19, 1959, but it appears doubtful that it will be possible for you to do so. As of June 11, there remained 1,666.2 feet of drifting and crosscutting and 700 feet of long-hole drilling to be completed on the 800 level.

If you wish to complete the project you should request an amendment to extend the termination date stating in your request the date by which the project can be completed. If it will require more than 6 months extension you should state the reason.

By Field Tess Reg on I

Wing G. Agnew, Acting Exec. Officer
U. S. Bureau of Mines

Donald R. Maclaren, Acting Member
U. S. Geological Survey

cc: OME (2)
USBM (2)
USGS(AD)
Sample

AUDIT COPY

EXPLORATION PROJECT CONTRACT
CLAYTON SILVER MINES
DOCKET NO. DMEA-4659

AMENDMENT NO. 1

It is agreed this 26th day of May, 1958, between the United States of America, acting through the Department of the Interior, Defense Minerals Exploration Administration, and Clayton Silver Mines, an Arizona corporation, that Exploration Project Contract No. Idm-K1106, (Docket No. DMEA-4659), dated July 19, 1957, is amended effective as of May 16, 1958, as follows:

In Exhibit "A" under "Description of the Work" Item No. 2 is revised to read as follows:

"2. Cut the 800 level station at a point approximately 300 feet below the 500 level. The station shall be not less than 10 feet high and in plan shall approximate the dimensions shown on the accompanying sketch, figure 1. The Government will not contribute to the cost of more than 3,000 cubic feet of excavation for this station at a cost of $0.62 per cubic foot. All station excavation in excess of 3,000 cubic feet will be at the Operator's sole expense."

This amendment shall not be construed to increase the estimated total cost of the project, the aggregate total amount which the Government may be required to contribute, or the fixed unit cost of any item of work.

Executed in quintuplicate the day and year first above written.

THE UNITED STATES OF AMERICA

By A. E. Weissenborn
A. E. Weissenborn
Executive Officer, DMEA
Field Team, Region I

CLAYTON SILVER MINES

By Norman M. Smith
Norman M. Smith
General Manager

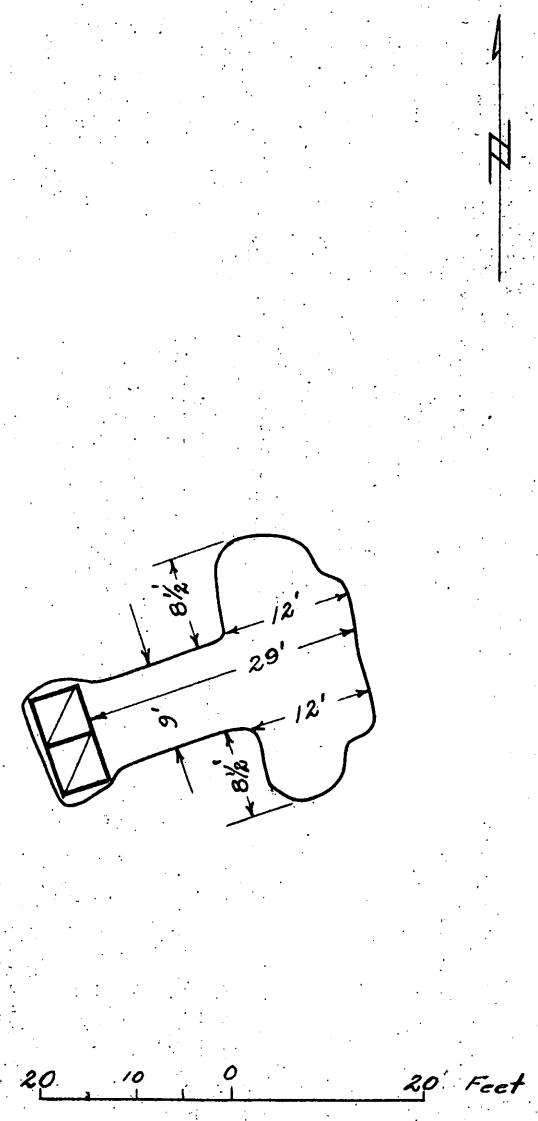

Figure 1 – Sketch showing Station Plan
Clayton Mine – Custer Co., Idaho

To accompany Ammendment No. 1,
Contract Idm. E 1108 Docket DMEA 4659

EXPLORATION PROJECT CONTRACT
CLAYTON SILVER MINES
DOCKET NO. DMEA-4659

Justification for Amendment No. 1

In a letter dated May 16, 1958, the Operator requested that the specifications for the 800 level station be modified for better operating arrangement. As long as the Government's obligation is limited to 3,000 cubic feet of station excavation at $0.62 per cubic foot and the height of the station is not less than 10 feet, the change in the plan details is acceptable.

MME Form 14
Sept. 1958

No. 49

Contract No. Idm-E) 14-23) 1100

Docket No. DMEA) MME) 4659

Date of Action ~~September 23, 1960~~ Terminated Contract

DEPARTMENT OF THE INTERIOR
OFFICE OF MINERALS EXPLORATION

OBLIGATION DOCUMENT

To: Chief, Accounts Section, Finance Branch, Bureau of Mines

From: Director, Division of Operations Control and Statistics

Please enter the amounts shown below on the accounts of the Office of Minerals Exploration.

Name and Address of Contractor:

Clayton Silver Mines
Sunshine Star Route
Kellogg, Idaho

Date of Contract	Region	State	Commodity
July 19, 1957	I	Idaho	Lead-Zinc

	Reserve	Obligation
Prior Amount	0	065,420.00
Increase	0	0
Decrease	0	790.80
Revised Amount	0	064,630.20

Remarks:

cc: 800
210

43244

DMEA Form 14

Contract No. Idm-E ~~1108~~

Docket No. ~~4659~~

DEPARTMENT OF THE INTERIOR

Executed contract

DEFENSE MINERALS EXPLORATION ADMINISTRATION

Obligation Document

TO: Chief, Finance Section, Budget and Finance Branch, Bureau of Mines

Please make the following entry on the records of the Defense Minerals Exploration Administration under the Strategic and Critical Minerals Exploration Program.

Date of Contract	Region	State	Commodity
July 19, 1957	~~III~~ I	~~Arizona~~ Idaho	Lead-Zinc

Name and Address of Operator:

Clayton Silver Mines
c/o Norman M. Smith, General Manager
Sunshine Star Route
Kellogg, Idaho

	Reserve	Obligation
Prior Amount	65,420.00	0
Increase	0	65,420.00
Decrease	~~65,420.00~~	~~0~~
Revised Amount	0	65,420.00

Remarks:

(Name)
Allen S. Dakan, Chief
Operations Control and
Statistics Division
(Title)

Date Delivered to Bureau of Mines, Washington 8/7/57

16416

Audit Copy

MF-200A
(Rev. April 1956)

OFFICIAL FILE COPY
DMEA
RECEIVED AUG 5 1957

DATE	INITIALS	CODE
		800

UNITED STATES OF AMERICA
DEPARTMENT OF THE INTERIOR
DEFENSE MINERALS EXPLORATION ADMINISTRATION
EXPLORATION PROJECT CONTRACT
(Short Form)

DMEA No.	Commodity	Contract No. Idm-E	County	State
8659	Lead-zinc	1108	Custer	Idaho

It is agreed 19 JUL 1957, between the United States of America, acting through the Department of the Interior, Defense Minerals Exploration Administration, hereinafter called the "Government," and Clayton Silver Mines, an Arizona Corporation

whose mailing address is Clayton Silver Mines, c/o Norman M. Smith, General Manager, Sunshine Star Route, Kellogg, Idaho
hereinafter called the "Operator," as follows:

ARTICLE 1. *Authority and project.*—(a) This contract is entered into under the authority of the Defense Production Act of 1950, as amended. It consists of this form (MF-200A), the attached Annex I (land description), Exhibit A (work and costs), and the maps and documents listed therein. The project work is a search for indicated or undeveloped deposits of the commodity designated above. The Operator shall begin the work on or before July 31, 1957, and, subject to the provisions of Article 7 and Exhibit A, shall complete the work within 24 months from the date of the contract.

(b) The description of the work and the fixed cost for each unit of work to be performed (per foot of drilling, per foot of drifting, per hour of operations, etc.) are hereby agreed upon as specified in Exhibit A. The estimated total cost of the project work is $130,880.00. The Government will contribute 50 percent of the fixed unit cost of the work performed, not exceeding $65,440.00, in accordance with the provisions of Articles 4 and 5.

(c) The Operator shall not transfer or assign this contract or any right or obligation thereunder without the written consent of the Government.

ARTICLE 2. *Operator's property rights.*—(a) The Operator represents and undertakes that Annex I correctly describes the land which is the subject of this contract and the nature of the Operator's rights of property and possession therein (whether as owner, lessee, or otherwise), and that such right, title, or interest is subject only to the following claims, liens, or encumbrances: None

(b) The Subordination Agreement of the holder of any claim, lien, or encumbrance listed above and (if the Operator does not hold the legal title) the Consent to Lien of any holder of the legal title of the land (lessor, seller, optionor, etc.) are attached, as follows: None

(c) The Operator shall preserve and maintain his right, title, and interest in the land and his right to the possession thereof for the purposes of this contract, and shall devote the land and all existing improvements, facilities, buildings, installations, and appurtenances to the purposes of this contract. The Operator shall neither transfer, convey, nor surrender the land nor any right, title, or interest therein, nor permit nor suffer any claim, lien, or encumbrance thereon, without expressly referring to and providing

in the instrument of conveyance, lien, or encumbrance for the preservation of the Government's right to a percentage royalty on production and lien for the payment thereof. Two copies of such instrument shall be furnished to the Government. If the Government's rights to royalty as provided in Article 6 have been terminated, the provisions of this paragraph (c) shall become inapplicable.

ARTICLE 3. *Performance of the work.*—(a) Operator's responsibility.—The work shall be performed diligently, efficiently, expertly, in a workmanlike manner, and in accordance with good mining standards and State regulations governing health, safety, and liability insurance covering employment. The Operator shall provide suitable and adequate equipment, facilities, materials, supplies, and labor to complete the work, as specified in Article 1 (a).

(b) *Government may inspect.*—The Operator shall consult with and inform the Government on all phases of the work as it progresses. The Government may enter at all reasonable times to inspect the work under the contract, and also after certification of discovery or development, to inspect production operations and underground workings. The Operator shall provide the Government with all reasonable means of access for such inspections.

ARTICLE 4. *Contribution by the Government.*—The Government will make its contribution on the basis of the monthly vouchers referred to in Article 5 (b); but all payments by the Government are provisional only, subject to audit, and until the account between the Operator and the Government is finally audited and settled and the Operator's final report has been rendered, the Government may withhold such sums as it sees fit but not in excess of 10 percent of the estimated total cost of the work. To the extent that excesses over fixed unit costs or any excess over the estimated total cost may be necessary for the performance of the work, the Operator shall incur and pay such excesses for his own account without contribution by the Government. The Government will not contribute to the cost of any work performed prior to the date of this contract. The Government may make payments for the account of the Operator directly to independent contractors and suppliers rather than to the Operator.

ARTICLE 5. *Reports, accounts, audits.*—(a) Operator's records.—The Operator shall keep suitable records and accounts of the units of work performed and of any production in which the Government may have an interest; and shall preserve those with respect to work performed for at least three years after final payment by the Government, and those with respect to production for at least three years after any obligation to pay royalties to the Government has terminated. The Government may inspect and audit said records and accounts at any time, either by itself or by a certified public accountant. The Comptroller General of the United States or his representative, until the expiration of said three-year periods, shall have access to and the right to examine all pertinent books, documents, papers, and records of the Operator.

(b) *Progress reports and vouchers.*—The Operator shall provide the Government with five copies of monthly progress reports in three sections as follows: (1) Operator's Monthly Report and Voucher showing a detailed statement of units of work performed during the reporting period; (2) Operator's Unit Cost and Progress Report showing the various types of work performed during the reporting period and the fixed unit costs incurred for each type of work; and (3) a Narrative Report of the work performed during the reporting period including adequate engineering-geological maps or sketches, drill hole logs and locations, and assay reports on samples taken concurrently with advance in mineralized ground. (Forms for reporting under (1) and (2) above will be provided by the Government.)

(c) *Final report.*—Upon completion of the work or termination of the Government's obligation to contribute to costs, the Operator shall furnish the Government with five copies of a final report (in addition to the final progress report and voucher). This final report shall include a geological and engineering evaluation of the results of the work performed under the contract with an estimate of the ore reserves resulting from such work, complete assay data, adequate geological and engineering maps or sketches, and a summary of the work performed and the unit costs thereof.

(d) *Report of sales.*—The Operator shall provide the Government with suitable accounting and documentary evidence covering all production to which the Government's percentage royalty relates, such as copies of smelter or concentrator settlement sheets, and certified accounts of production and sale or other disposition of production.

(e) *Compliance with requirements.*—If in the opinion of the Government any of the Operator's reports, records, or accounts are insufficient or incomplete, or if the Operator fails to make them, the Government may procure the making or completion of such with suitable attachments as an expense of the work to which the Operator shall contribute. The Government may withhold approval and payment of any vouchers relating to insufficient or incomplete reports, records, or accounts.

ARTICLE 6. *Repayment by Operator.*—(a) *Certification.*—If the Government considers that a discovery or development from which production may be made has resulted from the work, the Government, at any time not later than six months after the Operator has rendered a sufficient final report (see Article 5), may so certify in writing to the Operator. Such certification shall describe broadly or indicate the nature of the discovery or development.

(b) *Royalty on production.*—The Operator, as principal if the Operator is the producer or as surety if the Operator is not the producer (for example, if the Operator either transfers or fails to retain his interest in the land), shall pay to the Government a royalty on all minerals mined or produced from the land, as follows: (1) regardless of any certification of discovery or development, from the date of the contract until the lapse of the time within which the Government may make such certification or until the total net amount contributed by the Government without interest is fully repaid, whichever occurs first; or (2) if the Government makes a certification of discovery or development, for a period of ten years from the date of the contract or until the total net amount contributed by the Government without interest is fully repaid, whichever occurs first. See added provision in Annex I.

(c) *Basis for computation.*—The Government's royalty shall be a percentage of the gross proceeds (including any bonuses, premiums, allowances, or other benefits) from the production sold, in the form sold (ore, concentrates, metal, or equivalent), at the point of delivery (the f. o. b. point); *except,* that charges of *the buyer* arising in the regular course of business, and shown as deductions on the buyer's settlement sheets, on account of the cost of treatment processes performed by *the buyer,* sampling and assaying to determine the value of the production sold, and freight paid by *the buyer* to a carrier (not the Operator), shall be allowed as deductions in arriving at the "gross proceeds" as that term is used herein. Any costs of treatment processes, sampling, assaying, or transportation performed or paid by the Operator or by anyone other than the buyer are not deductible in arriving at the "gross proceeds" as that term is here used. The term "treatment processes," as here used, means those processes (such as milling, concentrating, smelting, refining, or equivalent, but excluding fabricating or manufacturing) applied to the crude ore or other production after it is extracted from the ground to put it into a commercially marketable form.

(d) *Unsold production.*—If any production (ore, concentrates, metal, or equivalent) after the lapse of six months from the date the ore was extracted from the ground remains neither sold nor used by the Operator in integrated manufacturing or fabricating operations (for instance, if it is stockpiled), the Government, at its option, as long as it so remains, may require the computation and payment of its royalty on the value of such production in the form (ore, concentrates, metal, or equivalent) it is in when the Government elects to require computation and payment. If any production is used by the Operator in integrated manufacturing or fabricating operations before the Government makes its election, the Government's royalty on such production shall be computed on the value thereof in the form in which and at the time it is so used. "Value" as here used means what is or would be gross income from mining operations for percentage depletion purposes in Federal income tax determination, or the market value, whichever is greater.

(e) *Percentages of royalty.*—The percentages of the Government's royalty shall be as follows:

One and one-half (1½) percent of amounts ("gross proceeds" or "value") not in excess of eight dollars ($8.00) per ton of production in the form in which sold, held, or used, plus one-half (½) percent for each additional full fifty cents ($0.50) by which such amounts exceed eight dollars ($8.00) per ton, but not in excess of five (5) percent of such amounts.

(For instance: the royalty on an amount of five dollars ($5.00) per ton would be one and one-half (1½) percent; on an amount of ten dollars ($10.00) per ton, three and one-half (3½) percent.)

(f) *Time for computation and payment.*—The Government's royalty shall be computed and paid currently upon each lot sold, held, or used in integrated operations, as the case may be, as above provided in this Article.

(g) *Lien for payment.*—To secure the payment of its percentage royalty, there is hereby granted to the Government a lien upon the land or the Operator's interest in the land and upon any production of minerals therefrom until the royalty claim is extinguished by lapse of time or is fully paid.

(h) *Notice to purchasers.*—The Operator shall give notice of the Government's claim for royalty to any purchaser of the production, and shall authorize and direct such purchaser to pay the royalty directly to the Government and to furnish the Government with copies of the settlement sheets. If the records of any production and sales or other disposition of production, whether the production is by the Operator or by others, are not made available to the Government, the amount of the royalty may be estimated by the Administrator, Defense Minerals Exploration Administration, or his successor, and his estimate thereof shall be final and binding upon the Operator.

(i) *No obligation to produce.*—Nothing in this contract is to be construed as imposing any obligation on the Operator or the Operator's successor in interest to engage in any production operations.

(j) *Government not obligated to buy.*—Nothing in this contract shall be construed as imposing any obligation on the Government to purchase any minerals mined or produced from the land.

ARTICLE 7. *Termination of the Government's obligations.*—(a) If in the opinion of the Government operations at any time have failed to achieve anticipated results that indicate the probability of making a worthwhile discovery and in the opinion of the Government further operations are not justified, the Government may give the Operator written notice thereof, and thereupon the Government shall be free of all obligation to pay on account of units of work not then performed, and the Operator shall be free of all further obligation to prosecute the work other than such as may be necessary and incidental to winding up, reporting, and accounting.

(b) If in the opinion of the Government the Operator is in any manner in default under the terms of the contract, the Government may give the Operator written notice of such default with a specification of reasonable time within which the default must be cured; and if the Operator fails to cure such default as required, thereupon the Government shall be relieved of all obligation to pay on account of units of work not performed when the notice was given, and the Operator shall be free of all obligation to prosecute the work other than such as may be necessary and incidental to winding up, reporting, and accounting. The Government may also avail itself of any other remedy the law may provide for breach of contract, including the right to rescind the contract and to demand repayment of all moneys contributed by the Government under the contract.

(c) The giving of any notice by the Government under the provisions of this Article 7 shall not affect the Government's rights as provided for in the contract with respect to a percentage royalty, and liens to secure the payment thereof, and such rights shall be fully preserved.

ARTICLE 8. *Notices to be given by the Government* may be delivered to the Operator or may be sent by registered mail addressed to the Operator at the mailing address stated in this contract. If mailed, notices are deemed to have been delivered five days after the date of mailing.

ARTICLE 9. *Officials not to benefit.*—No member of or delegate to Congress or resident commissioner shall be admitted to any share or part of this contract or to any benefit that may arise therefrom; but this provision shall not be construed to extend to this contract if made with a corporation for its general benefit.

ARTICLE 10. *Changes and added provisions.*—

See added provision in Annex I.

Executed in sextuplicate the day and year first above written.

THE UNITED STATES OF AMERICA

CLAYTON SILVER MINES
(Operator)

By C. O. Mittendorf
Administrator, Defense Minerals Exploration Administration

By Norman N. Smith
Norman N. Smith
Title General Manager

I, Ray Morrison, certify that I am the secretary of the corporation named as Operator herein; that Norman N. Smith, who signed this contract on behalf of the Operator, was then General Manager of said corporation; that said contract was duly signed for and in behalf of said corporation by authority of its governing body, and is within the scope of its corporate powers.

Ray Morrison

[CORPORATE SEAL]

U. S. GOVERNMENT PRINTING OFFICE: 1956—O-383069

OFFICIAL FILE COPY
DMEA
RECEIVED AUG 5 1957

DATE	INITIALS	CODE

EXPLORATION PROJECT CONTRACT
CLAYTON SILVER MINES
DOCKET NO. DMEA-4659

ANNEX I

The land referred to in Article 2 of the contract consists of the Patented Lode Mining Claims: Camp Bird, Camp Bird No. 2, Camp Bird No. 4, Discovery No. 1, and Discovery No. 3, U. S. Mineral Survey No. 3196 (Patent No. 1,055,371), excluding those portions of all ore bodies within said claims above the sill of the 500 level (elevation at Clayton shaft 5,342.72, Clayton Survey) known to exist on the date of this contract.

The land is shown on the attached property map entitled "Clayton Silver Mines, Clayton, Idaho, Custer County, Idaho, Property Plan Map, Plate 3."

The Operator owns the entire interest in the land.

Special Undertaking Concerning Royalty

Regardless of any certification of discovery or development, the Operator, as principal if the Operator is the producer, or as surety if the Operator is not the producer, shall pay royalty, computed as specified in Article 6 and for the maximum period provided in said Article or in any amendment thereof, on any minerals, wherever mined or produced, that are transported or removed through any workings driven under this contract. However, in no event is royalty payable under this provision on production for which royalty is payable under Article 6(b)(1) or (2).

EXPLORATION PROJECT CONTRACT
CLAYTON SILVER MINES
DOCKET NO. DMEA-4659

Exhibit A

Description of the Work

below 800 level
See map

The purpose of the project is to explore for lead-zinc ore by shaft sinking to the 800 level, and drifting north and south to encounter the downward extension of the 500 level ore bodies.

The work is as follows:

Item No.

1. Extend the main vertical shaft 300 feet. It shall be a two-compartment timbered shaft not less than 10 feet 8 inches by 5 feet 8 inches in rock cross section.

2. Cut the 800 level station at a point approximately 300 feet below the 500 level. The size of the station shall be not less than 10 feet high, 15 feet wide and 20 feet long, or approximately 3,000 cubic feet of excavation.

3. On the 800 level, cut a sump. The sump shall be approximately 10 feet deep, 20 feet long, and 20 feet wide, or approximately 4,000 cubic feet of excavation.

4. Below the 800 level, cut two loading pockets having a combined capacity of approximately 3,000 cubic feet.

5. On the 800 level, drift and crosscut for not to exceed an aggregate of 2,150 feet. The size of the drifts shall be 6 feet by 8 feet in cross section in the clear of timber. The location, direction, and extent of the drifts and crosscuts shall have prior approval of the Government.

6. Long hole drill 700 feet to determine the outline and grade of the north ore body and to test other structures that may be found. The location, direction, and extent

of these holes shall have prior approval of the Government.

Sludge samples shall be taken in significantly mineralized sections. The sludge shall be split, and one half thereof properly sampled and assayed. The remaining half of all sludge samples shall be furnished the Government upon request. Assay data shall be reported monthly to the Government.

7. Not to exceed 200 samples shall be assayed for lead, zinc, and silver.

The proposed shaft sinking and drifting is shown on the attached map entitled: "Clayton Silver Mines, Longitudinal Section, Looking Westward, Plate 1.

Fixed Unit Costs

1. Extend main vertical shaft (item 1), 300 feet @ $149.00/ft.	$44,700.00	
2. Cut 800 level station (item 2), 3,000 cubic feet @ $0.62/cu.ft.	1,860.00	
3. Excavate sump on 800 level (item 3), 4,000 cubic feet@$0.62/cu.ft.	2,480.00	
4. Cut two loading pockets (item 4), 3,000 cubic feet, @ $0.62/cu.ft.	1,860.00	
5. Drifting and crosscutting (item 5), 2,150 feet @ $33.90/ft. (rounded)	72,890.00	
6. Long hole drilling (item 6), 700 feet @ $1.00/ft.	700.00	
7. 200 samples assayed for lead, zinc and silver(item 7), @ $3.00/sample	600.00	
8. Engineer-geologist, 23 months @$250.00/mo.	5,750.00	
Estimated Total Cost of the Project		$130,840.00
Government's Participation, 50%		$65,420.00

EXEC. COPY
DMEA
RECEIVED
1957
DATE | INITIALS | CODE
800

So. 157 Howard Street
Spokane 4, Washington

August 1, 1957

Mr. George C. Selfridge, Chairman
Operating Committee, DMEA
Department of the Interior
Washington 25, D. C.

Re: Docket No. DMEA-4659 (Lead-Zinc)
Clayton Silver Mines
Clayton Mines
Custer County, Idaho
Contract No. Idm-E1108

Dear Mr. Selfridge:

Enclosed are the Government and Audit copies of the above-referenced contract. By copy of this letter other copies of the contract are being distributed.

Mr. Smith is unhappy with some of the provisions of the contract, chiefly the costs allowed for sinking and drifting, and has written a letter, two copies of which are attached, stating his objections in quite strong terms. We do not think it necessary to answer Mr. Smith's objections in detail. We recognize that by the time a contract is presented to an operator for signature he commonly is so committed to the project that he is almost forced to sign whether he likes the terms of the contract or not. This is unfortunate but we know no way of completely avoiding such a situation.

We do wish to say, however, that before our recommendations were submitted to the Operating Committee, our engineers discussed the costs in great detail with Mr. Smith and Mr. Smith did not then appear too dissatisfied with the recommended costs. With a few minor exceptions, these are essentially the costs specified in the contract. Our engineers again reviewed the costs with Mr. Smith before he signed the contract and do not regard them as out of line and Mr. Smith did not seem too displeased, although he still maintained that the costs allowed were too low. It is our impression that Mr. Smith may not be as unhappy as he seems in his letter, but has protested strongly in order to protect himself from criticism from his Board of Directors. We feel, also, that Mr. Smith's change in attitude is very much affected by the drop in metal prices which has made him more cost conscious than formerly.

Most of the other points raised by Mr. Smith seem to present no great problems. The matter of prorating royalties will be handled in our regular manner when the time comes and no special provision in the contract seems necessary. The matter of transportation deduction would presumably require a special agreement, but would be solved simply and automatically if Clayton Silver Mines arranged for the smelter to pay the transportation costs. Mr. Smith was told before signing the contract that the unit prices cannot be raised; on the other hand, it would seem to us that if the shaft should make so much water that the pumps cannot cope with it without a relay station, this could be provided for in a contract amendment.

By Field Team, Region I

A. E. Weissenborn, Exec. Officer
U. S. Geological Survey

Wing G. Agnew, Member
U. S. Bureau of Mines

Enclosures

cc: USBM (2)
Finance Office w/copy of contract
Abord

EXTRA COPY
DMEA
RECEIVED 1957
DATE | INITIALS | CODE

So. 157 Howard Street
Spokane 4, Washington

August 1, 1957

Mr. Norman M. Smith, General Manager
Clayton Silver Mines
Wallace, Idaho

Re: Docket No. DMEA-4659 (Lead-Zinc)
Clayton Mines
Custer County, Idaho
Contract No. Idm-E1108

Dear Mr. Smith:

This will acknowledge receipt of signed copies of Contract Idm-E1108 for the exploration of the Clayton mine.

We regret that you are dissatisfied with some of the provisions of the contract, particularly those dealing with some of the items of cost, but we are glad to have a frank expression of your feelings and we are forwarding your letter to the DMEA Operating Committee in Washington. However, our engineers point out that you have a very efficiently run operation and sincerely believe that you will not have as much difficulty as you fear in doing the work within the costs stipulated in the contract. They point out, for instance, that the Silver Mountain shaft which is much larger and deeper than the Clayton shaft was sunk for much under the cost you estimated for the Clayton shaft and they believe that the $149 allowed for the much smaller and shallower Clayton shaft is not out of line. They also believe that the good ground conditions at the Clayton mine should make it possible to achieve the $33.90/ft. drifting and crosscutting costs specified in the contract. We hope, therefore, that you will not find the terms of the contract as onerous as you anticipate, although, in fairness to you we have to point out that DMEA will not be able to adjust these costs for any items now specified in the contract.

The manner of prorating royalties on co-mingled ores can be worked out whenever it becomes necessary. This is a relatively simple process and does not, in our opinion, require special mention in the contract. You are correct that the contract as now worded does not allow deduction of haulage charges unless these are paid by the smelter. Unless for some reason it is impracticable to do so the simplest solution to this problem would be to arrange for the

smelter to pay these charges and deduct them from the settlement sheets as is done in the case of most of our contracts. We can assure you that it is not the intention of DMEA to collect an excessive royalty on any ore produced.

If it is found that the shaft makes so much water that the pumps cannot cope with it and you can demonstrate that a relay station is necessary, we think it possible that the contract could be amended to provide for such a station. The Field Team, however, is not authorized to make a committment of this nature and the matter would have to be referred to our Washington office for decision.

We sincerely hope that the exploration done on the contract will be successful in finding ore.

By Field Team, Region I

A. E. Weissenborn, Exec. Officer
U. S. Geological Survey

Wing G. Agnew, Member
U. S. Bureau of Mines

cc: DMEA (2)
USBM (2)
USBM (AD)
Alvord

EXTRA COPY
DMEA
RECEIVED

DATE	IN	CODE

July 26, 1957

Mr. A. E. Weissenborn
Executive Officer, DMEA
South 157 Howard Street
Spokane, Washington

Re: Docket No. DMEA-4659
Exploration Project Contract No. 1108

Dear Mr. Weissenborn:

DMEA Exploration Project Contract No. 1108 containing provisions for the Government's (DMEA) participation in exploring, at greater depth, the main mineralized portion of the Clayton Mine, has been received.

To say the least, I am very unhappy with this contract. In the first place, the "Fixed Unit Costs" have been cut so far below our estimates that I believe them unrealistic. This applies particularly to sinking and to drifting and crosscutting. In the second place, the contract contains certain provisions that will not fit into our operations. Also there are provisions which were discussed with the Government field men on which I had the understanding would be included in the contract but which are not even mentioned.

The whole situation has placed us in a most awkward position. We had every reason to believe that we had a very legitimate exploration project in which the Government would participate in cost on a 50-50 basis (Defense Production Act of 1950). Under that belief we first applied for aid and then moved right out in planning and preparing for the project so that there would be no delay when a contract was executed. We expected the contract to be submitted to us in about 60 to 90 days after our application was submitted. Consequently by June first we were fully prepared to commence work on the proposed project. But instead of a 90-day expected maximum time lapse, it was 143 days from the time our application was received until contract was processed. On Friday, July 19, I was informed that the contract would be signed, dated, and mailed from Washington that day. I had previously been informed, by the field men, that the contract date controlled participation by the Government. With that in mind and we being anxious to get the project under way, I telephoned the mine and gave them the "high ball". Consequently they blasted the first round that day, and are now proceeding with the project.

Now, as to this contract, I am faced with the dilemma as to whether I should execute a contract that I am most certain the Government will participate on approximately a 35-65 basis instead of a 50-50 basis, and in which certain provisions are not complete, so as to get what aid is now offered or whether to delay signing to see if the contract can be made somewhat more equitable, and take the chances of losing out on what we are now doing. We can not stop the project now without unnecessary loses.

The particular provisions in the contract on which I wish to voice protest are as follows:

1. Article 1. (a) Time for completion 24 months. We had estimated 118 weeks or approximately 27.5 months. However the contract calls for 650 feet more of drifting than was provided for in our estimate, consequently a longer time should be allowed. In round figures, we estimate the time for completion from July 19, 1957 as 30 months. It is to be taken into consideration that production and use of the shaft during production shifts can not be interrupted.

   There is a possibility or even a probability that the drifting and crosscutting can be done on a two-shift basis which will speed up progress there. This was discussed with personnel of the Bureau of Mines, but it was pointed out that it was still a probability. The contract does not take that probability into consideration.

2. Article 6. (c) In determining "gross proceeds" it is, and has long been customary to deduct transportation costs from net smelter returns before royalties are calculated. Transportation deductions under this Article are allowed only if paid by the buyer (smelter). It so happens that we pre-pay all transportation costs from mill to smelter. Concentrates are hauled entirely by common carrier. It seems reasonable to request a change in the wording in Article 6c so that deduction for transportation paid to common carrier by seller may be allowed.

   Also on a matter of figuring royalty, when and if ore is taken from the workings of this project, no doubt it will be commingled with ores taken from other parts of the mine. Royalty on the final product is to be paid on the ratio of quantity (tonnage) produced in any particular period. For instance, if we mill a total of 3,000 tons during a particular month and 500 tons come from this project, then royalty would apply on 1/6 of the value of metals produced that month. This also was explained to field men (U.S. Bur. Mines) and we expected some mention of it in the contract, so as to avoid any misunderstandings later on.

On Friday, July 26, 1957, I had a long discussion with the personnel of the Bureau of Mines there in Spokane on the matter of costs. I was somewhat amazed at some of the statements made on cost allowances, particularly that the Government does not expect to participate a full 50% in the actual costs of this project. Allocation of supervisory costs are not allowed at all. I went away from there knowing that they are not up to date on cost items as they exist today. For instance, they allow $33.90 a foot for drifting at the 800-foot level on this project with hoisting and a large volume of water to pump; still in 1951 (Dec.) a contract was let to Simplot Co. at Myers Cove for an adit with no pumping or hoisting for $32.19/ft. Miners pay then was $13.54/shift - now it is $16.80. Do you believe this realistic? I also went away from the Bureau of Mines fairly well convinced that they would not concede their position on costs.

I am convinced that this project will cost approximately $55,000 more than the contract allows. That be what it may, we are in a position now where I presume we will have to take what we can get. However, I still think a review of present costs should be made.

There was a matter of contingency mentioned in our application. That was the possible necessity of cutting a halfway station between 500 and 800 levels in order to relay water. We believe now this will be necessary, at a cost of some $1,200.

I will appreciate what guidance you may be able to give on this problem. In view of present metal prices and the slump in our income, this project now looms up as definitely a major financial undertaking for Clayton Silver Mine.

The executed contract is here enclosed. We have signed it under protest of the above mentioned provisions and trust some amendments may be made.

Sincerely yours,

Norman M. Smith

Norman M. Smith

jh

cc: Mr. Mittendorf

COPY

DMEA Form 14

Contract No. Idm-E 1108

Docket No. 4659

DEPARTMENT OF THE INTERIOR

Approved Contract

DEFENSE MINERALS EXPLORATION ADMINISTRATION

Obligation Document

TO: Chief, Finance Section, Budget and Finance Branch, Bureau of Mines

Please make the following entry on the records of the Defense Minerals Exploration Administration under the Strategic and Critical Minerals Exploration Program.

Date of Contract	Region	State	Commodity
July 19, 1957	~~III~~ I	~~Arizona~~ Idaho	Lead-zinc

Name and Address of Operator: Clayton Silver Mines
c/o Norman M. Smith, General Manager
Sunshine Star Route
Kellogg, Idaho

	Reserve	Obligation
Prior Amount	0	0
Increase	$65,420.00	0
Decrease	0	0
Revised Amount	$65,420.00	0

Remarks:

ALLEN S. DAKAN

(Name)

Allen S. Dakan, Chief
Operations Control and
Statistics Division

(Title)

Date Delivered to Bureau of Mines, Washington 7/19/57

16416

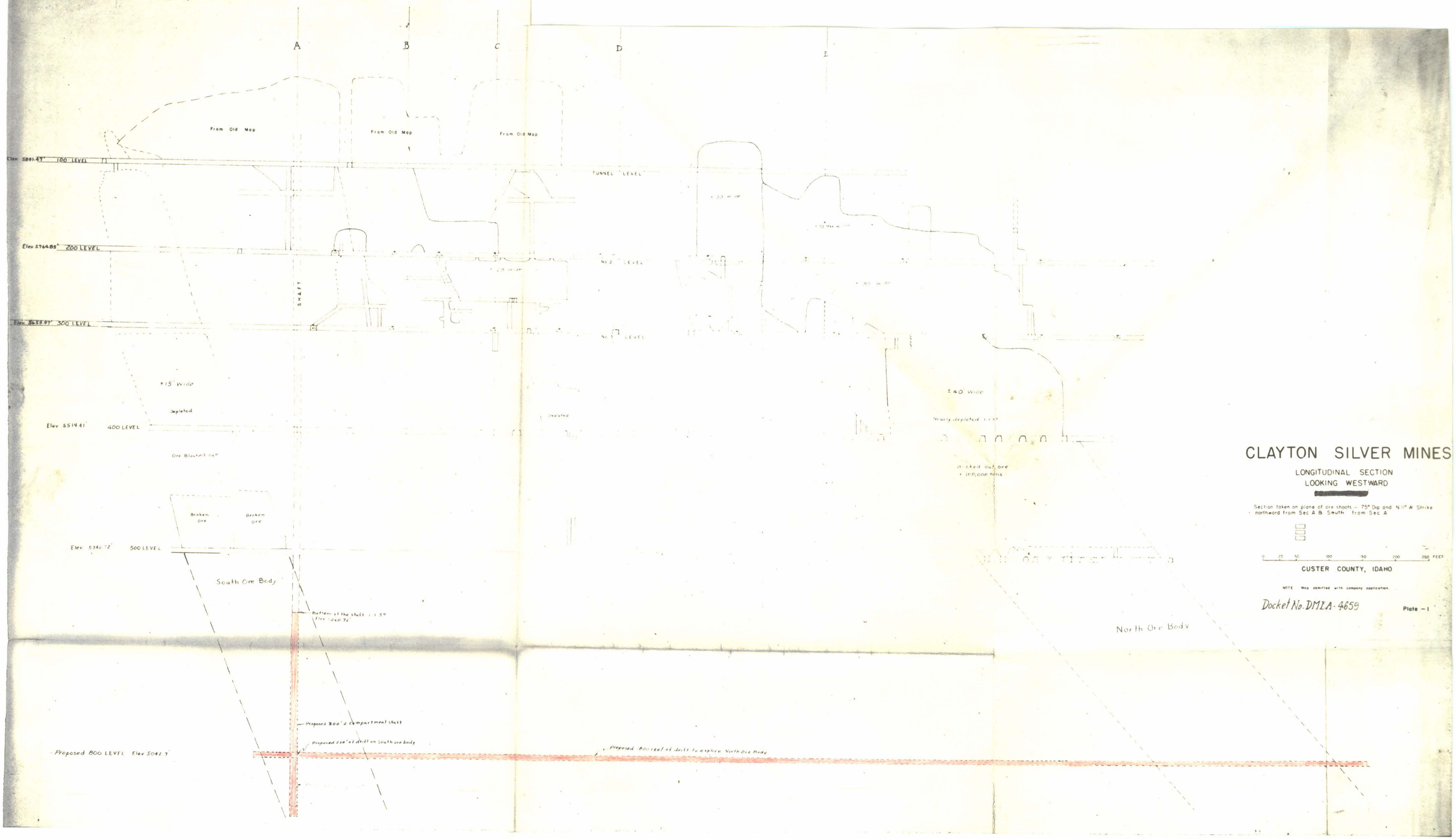
A
B
C
D
E
From Old Map
From Old Map
From Old Map
Elev. 5891.43' 100 LEVEL
TUNNEL LEVEL
Elev. 5764.85' 200 LEVEL
No 2 LEVEL
SHAFT
Elev. 5659.97' 300 LEVEL
No 3 LEVEL
±15' Wide
Depleted
Depleted
±40' Wide
Nearly depleted ±1.57
Elev. 5519.41' 400 LEVEL
Ore Blocked out
Blocked out ore
± 110,000 tons
Broken ore
Broken ore
Elev. 5342.72' 500 LEVEL
South Ore Body
Bottom of the shaft ± 1.57
Elev. 5260.72'
North Ore Body
Proposed 800'± compartment shaft
Proposed 250'± of drift on South ore body
Proposed 800 LEVEL Elev 5042.9'
Proposed 800'± of drift to explore North Ore Body
CLAYTON SILVER MINES
LONGITUDINAL SECTION
LOOKING WESTWARD
Section taken on plane of ore shoots – 75° Dip and N11° W Strike
- northward from Sec A & South from Sec A
0 25 50 100 150 200 250 FEET
CUSTER COUNTY, IDAHO
NOTE Map submitted with company application.
Docket No. DMEA-4659
Plate – I

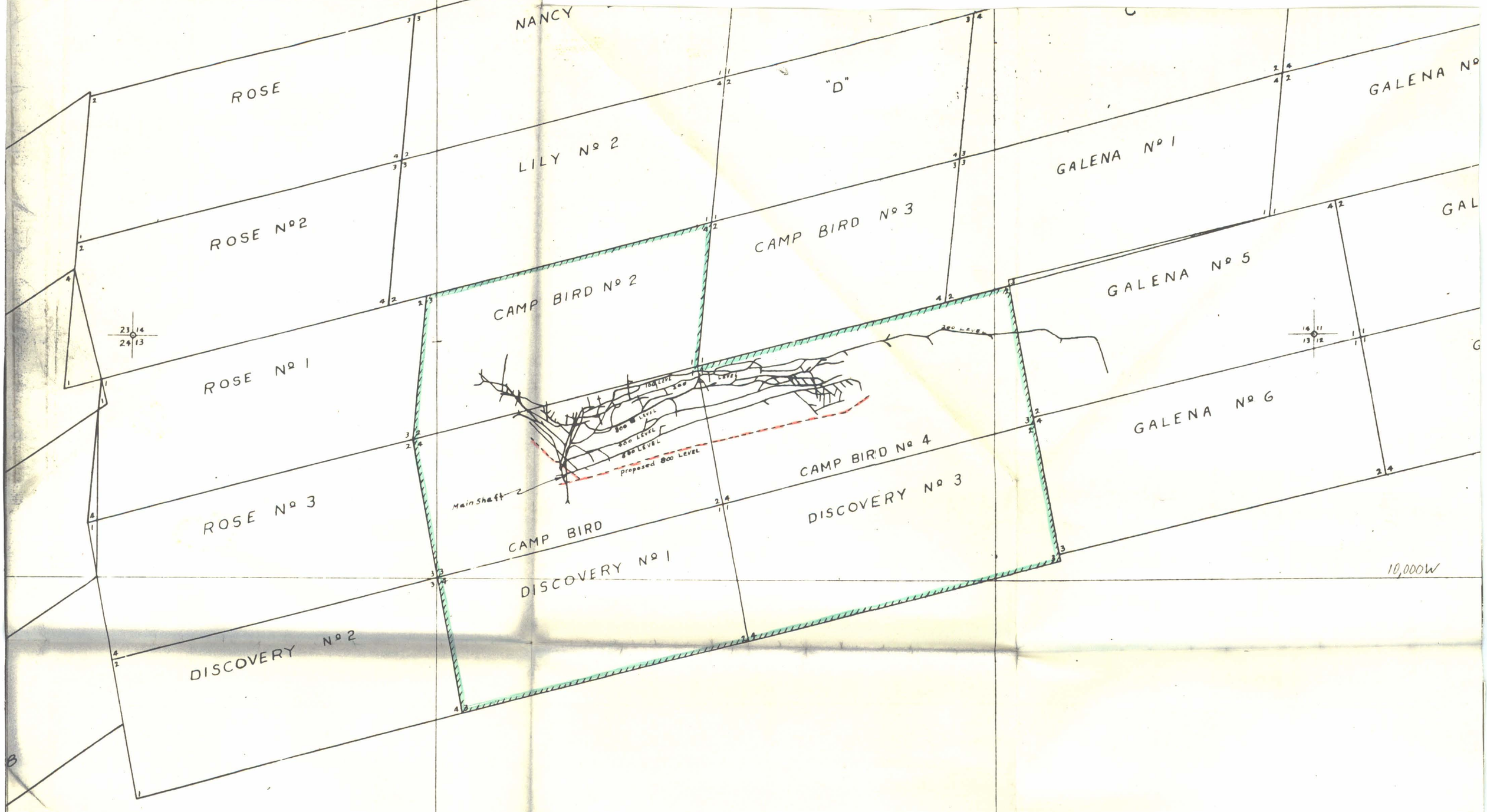

NORTH

Docket No. DMEA-4659

NOTE: Claims outlined by hachure are to be included as the land in the proposed contract.

Map submitted with the Company Application.

CLAYTON SILVER MINES

CLAYTON, IDAHO

CUSTER COUNTY, IDAHO

PROPERTY PLAN MAP

SCALE 1" = 300'

300 150 0 300 600 900 FEET

T. 11 N., R 17 E. B.M.

Plate 3

10,000N

12,500N