EXAMINATION ELECTROLYTIC PLANT

OF

AMERICAN SMELTING AND REFINING CO.
CORPUS CHRISTI, TEXAS

By
William H. Mundel[1]

CONTENTS

	Page No.
Introduction and summary	1
Location	2
History	2
Operating procedures:	
Receiving and roasting	3
Leaching	5
Purification	6
Zinc Electrolysis	8
Cadmium electrolysis	9
Melting and casting	9
Power	9
Water	10
Increased production	10
Cost to U. S. Government	12
Conclusion	12

ILLUSTRATIONS

Number	Following Page
Plate No. 1 - Analysis of electrolysis at Corpus Christi plant of American Smelting and Refining Company as compared to Great Falls plant of the Anaconda Copper Company	13
Figure No. 1 - General Flow Sheet	14

1/ Mining engineer, Bureau of Mines, Joplin, Missouri.

INTRODUCTION AND SUMMARY

The electrolytic zinc plant of the American Smelting and Refining Company was examined by an engineer of the Bureau of Mines on February 9, 1951 to ascertain facts concerning the construction of new additions to the purification and electric power units, at an estimated cost of $812,000 for which the company has applied to Defense Minerals Administration for a Certificate of Necessity entitling the company to amortize the expense within 5 years.

The plant was built during World War II to supply the demand for Special High Grade Zinc. Operation was started in October 1942, and has continued without a break since that time.

About 6,200 tons of zinc concentrates averaging 53 percent zinc are processed each month. Cadmium-rich flue dust and offgrade zinc from the A. S. & R. Co.'s Amarillo smelter are also refined at the Corpus Christi plant.

The average monthly output of the plant is 3,100 tons of electrolytic zinc, 20 tons of electrolytic cadmium, and 5,000 tons of pure sulphuric acid.

Mr. C. A. Waterman, plant manager, conducted the examiner through the Corpus Christi plant and freely discussed details of the operation.

LOCATION AND ACCESS

The electrolytic zinc plant of the American Smelting and Refining Company was built on the south bank of the Nueces River, about 5 miles west of the central part of Corpus Christi, Texas, because the area is accessible to markets by paved highway, standard guage railroad and boat, and because there is an abundant supply of cheap natural gas for fuel.

There are facilities at the plant for loading or unloading materials that are transported by railway or truck. At the time of the examination, a canal had been dredged from the Gulf of Mexico through Nueces Bay and up the Nueces River past the A. S. & R. Co.'s plant. On the shore of the canal and opposite the plant there are facilities for loading sulphuric acid through a pipe line into boats, but concentrates, or materials of similar nature, which are transported by boat must be transferred to or from railroad cars at an existing dock on the canal shore about 2 miles below the plant.

HISTORY

The Corpus Christi electrolytic plant was built to meet the demand by die casters and high grade brass producers for Special High Grade Zinc (purity 99.99 percent). Construction was started in 1941 and completed in October 1942. It has been operated continuously under competent management since that time. The power plant has operated under 10 percent overload during the past two years. Operating time is 24 hours a day, 7 days a week.

As originally constructed a part of the Monsanto Sulphuric Acid plant was found to be unequal to the task of removing all of the sulphur dioxide gas driven off in the roasters. An addition, which overcomes the difficulty, was completed in May 1950. Bottlenecks to increased capacity presently exist in the purification and power units.

OPERATING PROCEDURES 2/ 3/

Receiving and Roasting.

Flotation concentrates are received at the plant in railroad cars, unloaded, sampled, and stored in large stock-pile bins which hold two months' operating supply. Concentrates are conveyed as needed to storage bins which supply two Skinner type roasters. As received at the roasters, concentrates contain about 7 percent moisture; this is dried to 1/2 percent moisture on two drying hearths. Dry concentrates are discharged from the second hearth through a chute into two Hardinge air-swept ball mills, in closed circuit with pneumatic classifiers, ground to 98 percent minus 200 mesh, then passed through a cyclone into a surge bin. From the surge bin the concentrate is fed through a burner into the space above the third hearth where it burns to calcine, drops to number three hearth, and is rabbled through holes at the center to number four hearth. Roasting is finished on number four hearth,

---

2/ More detailed description will be found in A.I.M.E. Transactions, volume 159. Reduction and Refining of Non-Ferrous Metals.

3/ See Figure 1 - General Flow Sheet.

the calcine is rabbled to the perimeter, and discharged through a water-cooled screw-conveyor to an elevator. The elevator discharges onto a 20-mesh vibrating screen. The plus 20-mesh material is re-ground and added to the fines, which are pneumatically conveyed, through a long pipe, to storage bins over the leaching tanks.

Cadmium-rich flue dust and offgrade zinc produced by the A. S. & R. Co.'s Amarillo smelter are also received in railroad cars. Flue dust joins the calcine produced by the Skinner roasters. Offgrade zinc is converted to dust and is used as such in the regular process of the plant for the following reasons: (1) offgrade zinc substitutes for electrolytic zinc which would otherwise be used for dust, and (2) offgrade zinc is automatically refined to electrolytic zinc.

Hot gases from number four hearth pass through waste heat boilers, which produce steam for leaching and purification purposes, thence through cyclones and precipitators to relieve the gas of dust. The dust collected from the system, amounting to about 35 percent of the original weight of calcine, is returned to the roasters and remains in closed circuit until it eventually joins the calcine. Flue gas, after being cleaned, contains about 9 percent sulphur dioxide. It is passed through a Monsanto Sulphuric Acid Plant which produces 98 percent sulphuric acid, of which 60 tons a month is used in the plant process and the balance goes to market.

Leaching.

Calcine from the main storage bins in the leaching department is transferred to individual charging bins over the leaching tanks. Leaching tanks are made of wooden staves and lined with lead and acid proof brick. Certain proportions of spent electrolyte, calcine, and manganese ore are added in one batch to a leaching tank. Later the batch is pumped from the leaching tank to an agitating tank, which is similar in construction to a leaching tank, and the batch is agitated until the zinc and other metals contained are dissolved. The pulp is then pumped into Burt filters, where it is filtered and washed in steps with four wash solutions called strong, medium, and weak wash-solutions and condensate water wash. The filtrates containing the pregnant liquor from the agitator tank and the filtrate obtained after washing the cake with strong wash solution are pumped to impure leach solution storage. The filtrates obtained after washing the cake with medium and weak wash solutions and with clean condensate water become respectively, strong wash solution, medium wash solution, and weak wash solution, and are stored in separate tanks for use on the following batch. Condensate water is supplied from the steam which is produced by the waste heat boilers.

After the fourth washing, pressure on the filter is released, more condensate is added, the cake is broken loose from the filter bags by vacuum and the filter is revolved long enough to repulp the residue, which is discharged into a thickener. The overflow from the thickener goes to weak wash storage and the spigot product goes to Oliver filters.

The filtrate from the Oliver filter joins the thickener overflow; the cake goes to gas fired driers, and thence by conveyor to storage bins from which the cake is shipped by rail to El Paso for further treatment.

Purification.

All tanks, wherein leaching, agitating, and purifying are done, are covered and ventilated, through a fan and stack, to the outside air because gases generated above the pulp are injurious to the health of employees. The purification plant is presently operating at peak load.

The impure zinc solution, which is approximately neutral, contains sulphates of Co, As, Cu, Sb, and Cd, which are removed in the following three steps:

1. The impure solution is pumped into unlined wooden tanks, which have copper coils attached to the walls, and are equipped with paddles for agitation. Steam is passed through the copper coils and the paddles are revolved until the temperature of the solution is raised to 90° C. Reagents, consisting of copper sulphate, arsenic, zinc dust, and spent electrolyte are added to precipitate Co, As, Cu, and Sb. Cadmium and zinc remain in solution. The pulp is pumped through a Shriver Filter Press, in which the filtering media is paper-backed canvas. When the pressure guage on the filter indicates that the filter is full of cake, the filter is taken apart and the cake is removed by washing it into pans under the filter. The cake is dried and shipped, with other products, to El Paso for further treatment.

2. The filtrate from the Shriver Press is pumped to a second purification tank where zinc dust is added and the filtrate is cooled to 75° C. Cadmium with some copper is precipitated and removed in a Shriver Filter Press. The filtrate from the Shriver Press is pumped to pure zinc-liquor storage.

3. The cadmium cake, obtained from the Shriver Press in step number two, is treated in a leaching tank, similar to those used in the main leaching process, where the cadmium is redissolved in strong, fresh sulphuric acid and spent electrolyte from the cadmium electrolytic circuit. The copper-bearing residue is removed in a Shriver Filter Press and shipped with the other byproducts to El Paso. The filtrate is pumped to unlined, agitating tanks where the cadmium is precipitated in the form of a zinc-cadmium sponge by adding an excess of zinc dust. The sponge is removed from the liquor and washed in stages, similar to those used in the Burt Filtering process for zinc, with strong, medium, and weak cadmium-bearing solutions. When sponge washing is complete the zinc content of the sponge is approximately 5 percent. The resulting sponge is dried in steam-heated pans and allowed to oxidize. The oxidized sponge is placed in lead-lined tanks, and the cadmium is dissolved in strong sulphuric acid and spent cadmium electrolyte. The pulp is filtered in a Shriver Filter Press from which the cadmium-bearing liquor is pumped to storage tanks for pure cadmium electrolyte, to be drawn off as needed for electrolysis in the cadmium electrolytic cells.

Zinc Electrolysis. 4/

Zinc electrolysis is carried on in 320 cells arranged in two parallel circuits of 160 cells each. Each circuit is subdivided into 16 banks of 10 cells each. One cell contains 25 anodes and 24 cathodes, each one connected to the proper bus bars, mounted on the cell frames, by an ingenious method of cone-shaped contacters which facilitate quick removal or replacement and maintain exact spacing. Spacing is further corrected by porcelain knobs on the anodes and wooden strips attached to the cathodes. Anodes are cast of Tainton lead-silver alloy in grid pattern. Cathodes are made of rolled aluminum sheets. Anodes and cathodes are welded to head bars so constructed that they can be placed in or removed from the cells in clusters, thus facilitating cleaning, replacing, or stripping operations.

The gravity of the electrolyte is maintained by the addition of condensate water to the cool storage tanks. A steady flow of electrolyte is pumped through the cells, thence into the cooling tower and back to storage. Cells are cleaned at proper intervals to maintain good results and cathodes are removed and stripped each 24 hours. A glue froth is maintained in the cells to prevent the escape of gas and the formation of trees.

4/ Plate Number One shows analysis of electrolysis at Corpus Christi Plant of American Smelting and Refining Company, as compared to those at Great Falls plant of the Anaconda Copper Company.

Cadmium Electrolysis.

Cadmium electrolysis is carried on in 10 cells similar to those used for zinc deposition. Anodes are made from sheets of chemical lead and cathodes are made from rolled aluminum sheet. Glue is added to the electrolyte for the same purpose as in zinc electrolysis.

Melting and Casting.

Zinc cathodes are weighed, melted, and poured into molds which form the zinc into shaped slabs containing a square hole and a knob to assist in holding it in bundles bound by metal straps. Molds and contents are cooled by water jets. A small amount of zinc is cast in one-pound balls for electroplating.

Cadmium cathodes are processed in a smaller unit similar to that used for zinc. Practically all cadmium is cast in one-pound round balls for electroplating.

POWER

The large amount of cheap gas available for fuel, used to fire the boilers which furnish steam to the turbo generators, was one of the principal reasons for locating the American Smelting and Refining Company's electrolytic plant at Corpus Christi. There are 5 DC generators of 2,500 KW capacity each, which furnish electric power for electrolysis, and 2 AC generators of 2,500 Kv-a each, which furnish power for plant motors and lights. The electric plant has been operating under a

10 percent overload for the past 2 years, at a direct current load of 13,750 KW. Some time is lost making repairs. Extreme caution must be observed at all times to prevent power failure.

WATER

Water for the plant comes through a pipe line from the Nueces River in sufficient quantity to supply all needs during normal periods. There is a standby water-purification plant, built by American Smelting and Refining Company at a cost of $235,000, on the outlet of Corpus Christi sewer, for use in periods of extreme drouth. The U. S. Reclamation Service has planned a dam at Oakville, Texas, that if or when built will solve all present water problems for the district.

INCREASED PRODUCTION

The company has been asked by the U. S. Government to increase the production of zinc, and in response to that request, has planned, approved, and started construction on additions to the present purification and power units at the Corpus Christi electrolytic plant. Addition of two tanks and a Shriver Filter Press in the purification plant must necessarily be housed within an extension to the present building.

The new facilities in purification are needed to furnish capacity for increased production. There are no such idle facilities in the vicinity in which purification could be carried on even if problems of economy were ignored.

The management believes that the plant contains sufficient excess capacity in all units, other than purification and power, to increase monthly production by at least 150 tons of zinc, 1 ton of cadmium, and 250 tons of sulphuric acid.

There is sufficient room in the present power house to accommodate the new 5,000 Kv-a turbo generator, switch board, 2,750 Kv-a mercury-arc rectifier (94 percent efficiency), and pumping equipment, necessary for increased power facilities. A new boiler will be installed outside the present building.

Of the new power produced, 2,750 Kv-a alternating current, will be converted to 2,585 KW direct current. The remainder will be used for overload on the present AC plant and for standby purposes. Of the 2,585 KW new direct current produced, 1,250 KW will be used to take up present overload and 1,335 KW will be available for increased production.

Of the 1,335 KW new power available for electrolytic uses, approximately 1,300 KW can be used for increased production. Then 1,300 divided by 1.54, which is the amount of zinc deposited each kilowatt hour, equals 844 pounds of zinc an hour, and 844 times 720 hours and divided by 2,000 pounds equals 304 tons of zinc each month, which is the amount of possible increased production. When this fact was called to Mr. Waterman's attention he stated that, although he was aware of the fact, he was not sure of the ultimate

capacities of the leaching tanks, electrolytic cells and other production factors of the plant and for that reason he had estimated only 150 tons of increased zinc production each month.

COST TO U. S. GOVERNMENT

In the event that accelerated amortization is approved, the Internal Revenue Bureau 5/ has estimated that the company will be relieved from paying $39,000 in taxes each year for five years. Then 150 tons a month equal 1,800 tons, or 3,600,000 pounds of increased zinc production each year at a loss in taxes to the U. S. Government of $39,000. Then the cost, in taxes to the U. S. Government, for a pound of increased zinc production, would be $39,000 divided by 3,600,000 pounds, or $0.01 a pound (if increased production of cadmium and sulphuric acid are ignored).

CONCLUSION

While it seems reasonable to think that the American Smelting and Refining Company expects the demand for plant products to expand not only during the emergency period but to continue thereafter, its legal right to apply for accelerated amortization on 100 percent of facilities under Section 124A of the Internal Revenue Code is considered valid and was recommended for the following reasons:

5/ Mr. L. P. Herndon - Amarillo Branch.

1. The U. S. Government has asked the American Smelting and Refining Company to increase production of electrolytic zinc.
2. The purification and electric power installations are new ones, made in the interest of national defense.
3. Increased facilities to purify zinc sulphate are necessary because a bottle-neck exists in the present unit.
4. Although there will probably be 1,000 Kv-a available for stand-by electric power in the new power unit, the excess amounts to less than 5 percent of the plant capacity, and is not excessive.
5. Zinc is listed by the Munitions Board as scarce and critical and cadmium is listed as scarce. Zinc and cadmium are required by the armed services in airplanes and autos as well as in many other items. Sulphuric acid is required in the manufacture of explosives. Therefore increased power and purification facilities, at the American Smelting and Refining Company's electrolytic plant, will not only provide for increased production of three major commodities required by the armed services, but will insure continued production of the present output.

PLATE NUMBER ONE - Analysis of Conditions of Electrolysis at Corpus Christi plant of American Smelting and Refining Company as Compared to those at Great Falls Plant of the Anaconda Copper Company.

Great Falls Plant, Anaconda Copper Company		Corpus Christi plant, American Smelting and Refining Company
	Electrolyte	
1.25 - 1.30	Sp. Gr.	1.31
110 - 120	Concentration Zn TO cell G/L (grams per litre)	180
45 - 60	Concentration Zn FROM cell G/L	56 - 60
105 - 110	H_2SO_4 cell discharge	200
37° - 41°	Temp. degrees centigrade	36°
Cascade and Individual	Feed to Cell	Cascade
6	Circulation gal/min	10
30	Amperes/sq.ft.	60
3.7	Voltage	3.5
93%	Current efficiency	84.7%
9-5,800 KW gen. 1,000 amps.-580V	Current KW/generator	5-DC generators 2,500 KW capacity each
1.55	KW hrs/pound Zn	1.54
Chemical Pb 45"x24½"x3/16"	Anode Composition Length x width x thickness	Tainton-Ag-Pb Alloy 31"x19-5/8"x9/16"
Cast around conductor	Mode of suspension	Burned to Pb-Sb head bar cast around 3/8"x2" copper bar
3"	Anode spacing	3"
Solid	Anode construction	Grid pattern
2-3 years	Anode life	2 years
Aluminum	Cathode composition	Rolled aluminum
45"x24"x3/16"	Cathode size	36"x21"x3/16"
13 - 15 months	Cathode life	2 years
Riveted to conductor	Mode of suspension	Welded to conductor
24 hours	Cathode removal after	24 hours
2 sheets - 11# each	Cathode weight	23 #
1,152	No. of dep. tanks	320
10'3"x2'10"x4'9"	Size-LengthxWidthxThickness	7'0"x2'6"x4'6"
28	No. of anodes/cell	25
27	No. of cathodes/cell	24
Lead lined wood or concrete	Materials of construction	4" reinforced concrete with ¼" lead lining
40 - 45% MnO_2	Tank mud composition	75% MnO_2
6 weeks	Removal after	10 to 15 days
1-1/2 G/L or 3# ton of feed	Amount	3-4 G/L

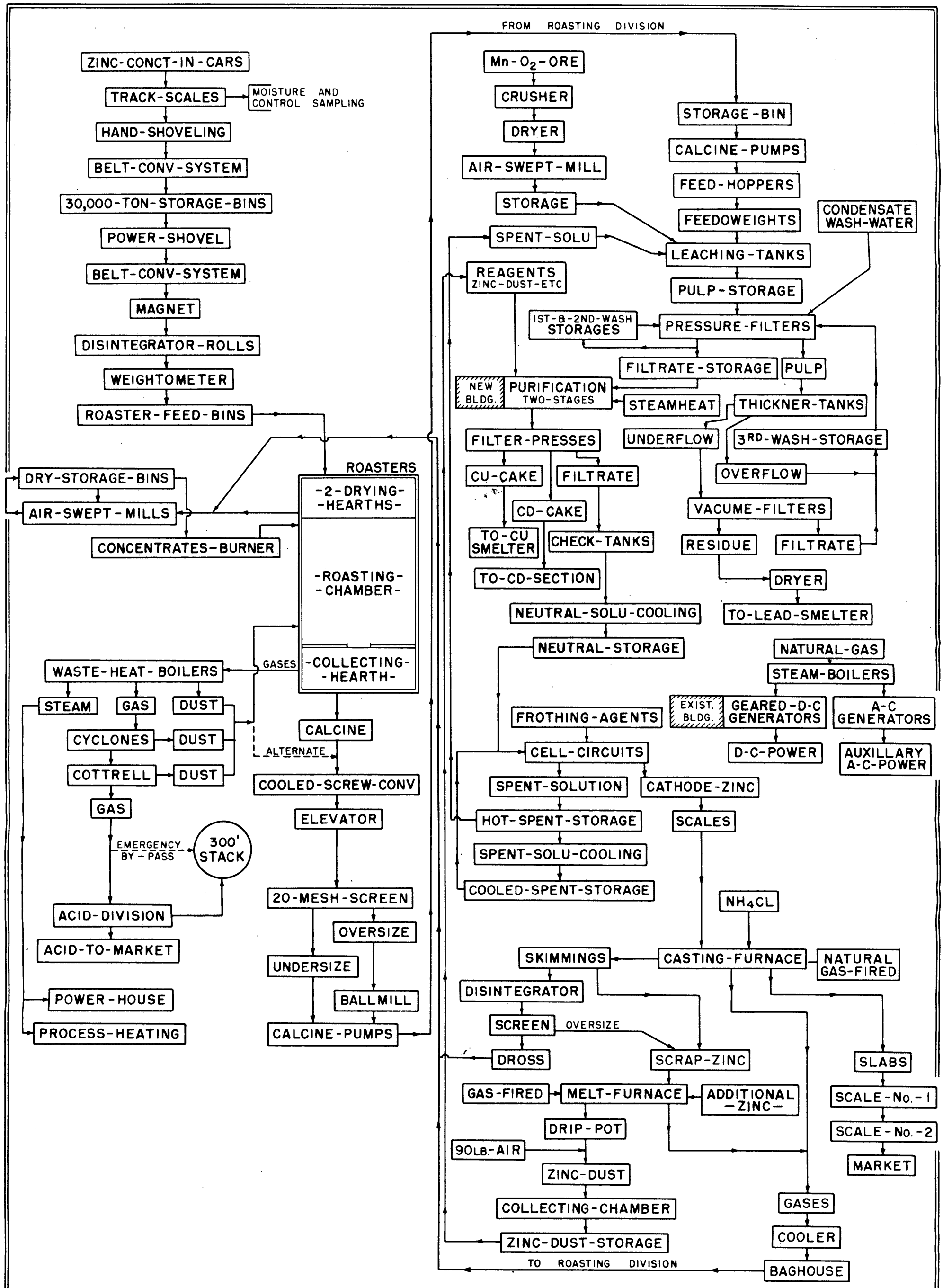

FLOW SHEET OF A. S. & R. CO.

ELECTROLYTIC ZINC WINNING PLANT

FEBRUARY-1951 CORPUS CHRISTI, TEXAS FIGURE No. 1

INVESTIGATION OF OPERATIONS AND INSTALLATIONS AMERICAN SMELTING AND REFINING COMPANY'S PLANT, AMARILLO, TEXAS

by

William H. Mundell[1]

CONTENTS

	Page
Introduction and summary	1
Location	2
History and production	2
Present process	3
Mechanical charging	7
Conclusion	8

ILLUSTRATIONS

Fig.		Following page
1.	General flow-sheet, American Smelting and Refining Company's zinc smelter, Amarillo, Texas	8
2.	Detail flow-sheet, screening plant	9
3.	Photo-view of American Smelting and Refining Company's smelter, Amarillo, Texas	10
4.	Close up view new smelter stack	10

1/ Mining engineer, Bureau of Mines, Joplin, Missouri.

INTRODUCTION AND SUMMARY

The American Smelting and Refining Company's zinc smelter was visited by an engineer of the Bureau of Mines on February 6, 1951, for the purpose of gathering facts pertaining to installation of a new screening plant, at an estimated cost of $58,000, which the company stated was being installed in the interest of national defense to increase production of Prime Western grade zinc by 200 tons a month, and for which it had applied to Defense Minerals Administration for a Certificate of Necessity pursuant to section 124A of the Internal Revenue Code.

About 8,000 tons of raw zinc concentrates averaging 50 percent zinc, are received from independent producers in Mexico, Arizona, Colorado and New Mexico each month. The finished products are 3,000 tons of Prime Western grade zinc and 700 tons of special high grade zinc (99.99 percent zinc) a month. The Prime Western grade zinc is sold, at the open market price, to galvanizers in western United States and the special high grade zinc is shipped to die casters and high grade brass producers.

Byproducts consisting of copper-gold-silver lead residue, cadmium-rich flue dust, and offgrade zinc are shipped to other A. S. & R. Co. plants for further processing. Byproduct plumbers' lead is produced for the trade.

Mr. E. J. Bruderlin, plant manager, freely discussed operations and conducted the examiner through the plant.

LOCATION

The American Smelting and Refining Company's zinc smelter is of the horizontal type and was built in the northwest outskirts of Amarillo, Texas, about 3½ miles from the center of the city, because there is an abundant supply of cheap natural gas available for fuel. It is serviced by hard surfaced highways and a standard guage railroad. To reach the plant from the center of Amarillo, go 1½ miles west on U. S. Highway Route 66 to Georgia Avenue, then turn right on black-top highway to the smelter gate.

HISTORY AND PRODUCTION

One block of retorts with auxilliary equipment, was constructed in 1922 to smelt 800 tons of zinc concentrates a month. These concentrates were produced by company-owned and independent mills in Mexico, Arizona, Colorado, and New Mexico. Capacity, process, and techniques have been improved over the intervening years to the state that now 8,000 tons of raw zinc concentrates (all from independent producers) are smelted each month, and 90 percent of the zinc in the concentrates is extracted as metal. Finished products are 3,000 tons of Prime Western zinc, 700 tons of special high grade zinc and a small amount of plumbers' lead. The smelter has been in continuous operation since 1922 and is now operating 24 hours a day 7 days a week.

Zinc concentrates owned by the U. S. Government have been smelted in the A. S. & R. Co.'s Amarillo plant and the metal has been turned over to the Government for stockpiling. All products owned by A. S. & R. Co. are sold on the open market by the company's New York sales department. Present demand is greater than supply.

PRESENT PROCESS

Concentrates are received in railroad cars, weighed, sampled and stored in large stock pile bins, from which the concentrate is conveyed as needed to supply bins over seven Ropp roasters. In the roasters the concentrate receives a partial roast which drives off the water and one-third to one-half of the sulphur contained. The partially roasted concentrates are cooled and stored in bins over the Dwight Lloyd sintering unit.

There are three D. & L. machines mounted side by side. The central machine works in series with each of the other two. Partially roasted calcine from the storage bins is mixed with fine coal and sintered in two steps, during which the sulphur content in the final sinter is reduced to 0.05 percent. After cooling the sinter is ground and elevated to the mixing bins, from which it is carefully weighed, mixed with the proper proportions of pulverized coal, blue powder and salt and distributed by dump trucks to retort receiving bins.

The gas from the Repp roasters and the D. & L. machines passes through a bag house to a new 400-foot stack with 12-foot inside diameter at the top. A cyclone was added to the flue of the central D. & L. machine during 1950. This step is reported to have increased cadmium extraction. Similar installations are planned for the two remaining D. & L. machines. Flue dust, rich in cadmium, is caught in the bag house.

Charge material delivered from the mixing plant to retort receiving hoppers is smelted in the retorts. No fire and very little free air actually contacts the charge. A small port hole, left in the condenser mouth, provides for the escape of retort gas which starts to generate as soon as the charged material becomes hot enough. Some of the escaping gas is carbon monoxide which would be injurious to the health of furnace men if it was not ignited and allowed to burn. By the color and appearance of the flame, experienced men can judge furnace conditions.

A complete cycle for treatment of any one charge consists of the following three steps:- 1) Material is drawn from receiving hoppers into a charging buggy, wheeled along the furnace front, and charged by hand into each tier of retorts. Condensers are fastened to the retort mouth, sealed with mud, and the furnace fires are ignited. 2) Zinc in the calcine is vaporized in the retorts, distilled to hot metal in the condensers, and drawn off into a ladle mounted on a crane from which it is poured into molds. Blue powder, so-called

because of its color, consisting of reformed zinc oxide and fine grains of metallic zinc, is also drawn from the condensers, and is skimmed from the molten zinc in the ladle, before the metal is poured into molds. A scoop shovel with 1/2 inch round holes in its bottom, is used to skim off the blue powder that is discarded to a cooling pile nearby. Spilled zinc metal is also discarded with the blue powder. 3) After the zinc oxide is sufficiently reduced in the calcine, the fire is shut off, the condensers are removed, and the residue is raked from the retorts to a tunnel below the furnace floor, where the residue cools and is later gathered by a bulldozer for conveyance to bins over a gravity concentrator.

The molds into which molten zinc is poured from the collecting ladle form the metal into slabs of two distinct shapes: (1) Prime Western zinc, which must contain a minimum of 98.5 percent zinc and a maximum of 1.5 percent impurities, is molded into slabs having square holes and square knobs which facilitate stacking and binding into bundles for shipment; (2) offgrade zinc, which contains more than 1.5 percent impurities is cast into slabs with rectangular holes and knobs that distinguish them as offgrade zinc.

Some of the offgrade zinc produced at Amarillo is shipped to the company's electrolytic plant at Corpus Christi where it is converted to zinc dust, used in the regular process, and refined to high grade electrolytic zinc. The balance of the offgrade zinc is refined in liquating furnaces on the premises, in which much better control of heat and atmospheric conditions can be maintained than in the retort furnaces. The products from the liquation furnaces are Prime Western zinc and Plumbers' Lead.

The company operates a refractory plant on the smelter premises in which all retorts, condensers, and other refractories necessary to plant operation are produced.

A part of the Prime Western zinc produced at Amarillo is diverted to another division in the plant, where it is redistilled and purified by a secret process, which was developed in cooperation with the New Jersey Zinc Company. Each month 700 tons of special high grade zinc, containing a maximum of 0.0035 percent of impurities, is produced by this secret process. The product competes with electrolytic zinc for die casting and high grade brass markets.

The residue which is raked from the retorts, cooled, and conveyed to storage bins over the gravity concentration section, is drawn from the bins as required, ground and screen sized, thence concentrated by gravity on jigs and sand tables into the following: 1. Fine coal, which is present because an excess must be used in retorts, is reclaimed and used again. 2. Concentrates containing copper, gold, silver, and lead are collected and shipped to the A. S. & R. Company plant at El Paso. 3. The remaining part of the residue is discarded as tailings.

Flue dust, formed in the plant process, contains considerable cadmium and zinc, and is shipped to A.S. & R. Company's electrolytic plant at Corpus Christi where the metals are extracted as electrolytic cadmium and zinc.

MECHANICAL CHARGING

The A. S. & R. Co. introduced experimental mechanical charging on one block of retorts. Actual use over more than 6 months has produced a body of facts sufficient to prove that, whereas an expert hand charger compacts a retort charge to a density of 45 pounds a cubic foot of retort space, the mechanical charger compacts the charge to a density of 75 pounds a cubic foot and by doing the job in less time saves 1-1/8 man shifts of labor each 24 hours. It is estimated that mechanical charging on all eight blocks of retorts will save 9 man shifts of labor each day and will increase the plant output by 200 tons of Prime Western zinc each month.

Despite hand-sorting before it is mixed in the retort charge, the recharged blue powder contains lumps of metallic zinc and zinc oxide that interfere with mechanical charging. For this reason and also because metallic zinc is more efficiently treated by liquation, a screening plant which will separate metallic zinc from the blue powder and grind the lump oxide to proper size has been planned, approved, and partly constructed at one end of the mixing plant (figs. 1 and 2).

Cheap natural gas for fuel, coal for carbonaceous material, electric power, and housing with attendant transportation and shopping facilities are considered to be ample for all anticipated needs. The water supply, which is generally critical in the vicinity of Amarillo during periods of drouth, has been increased recently to three or four times present plant needs in drilled wells on company ground.

In the event that a large increase of labor supply is required by the smelter, it will have to compete for labor with the Amarillo Air Base and Pan Tex Ammunition Base which have recently been reactivated by the U. S. Government.

As provided for under section 124A of the Internal Revenue Code, American Smelting and Refining Company has applied to the U. S. Government for accelerated amortization on an estimated cost of $58,000 for construction of the screening plant above, and claims that increased production of Prime Western zinc will amount to 200 tons each month when the plant is finished. But investigation shows that it will also be necessary to construct mechanical charging equipment on the 7 remaining blocks of retorts before the total increased production of 200 tons a month can be realized.

CONCLUSION

Zinc is a necessary or contributory constituent of numerous materials directly required by the armed services of the United States and therefore is vital to Mutual Defense Assistance. Zinc has been declared to be both scarce and critical by the Munitions Board. The screening plant, under construction by the A. S. & R. Co., is an important part of a plan to increase efficiency and production of Prime Western zinc by 200 tons a month at the Amarillo Smelter of American Smelting and Refining Company. Therefore, it was recommended that a certificate of necessity be granted by the Defense Minerals Administration.

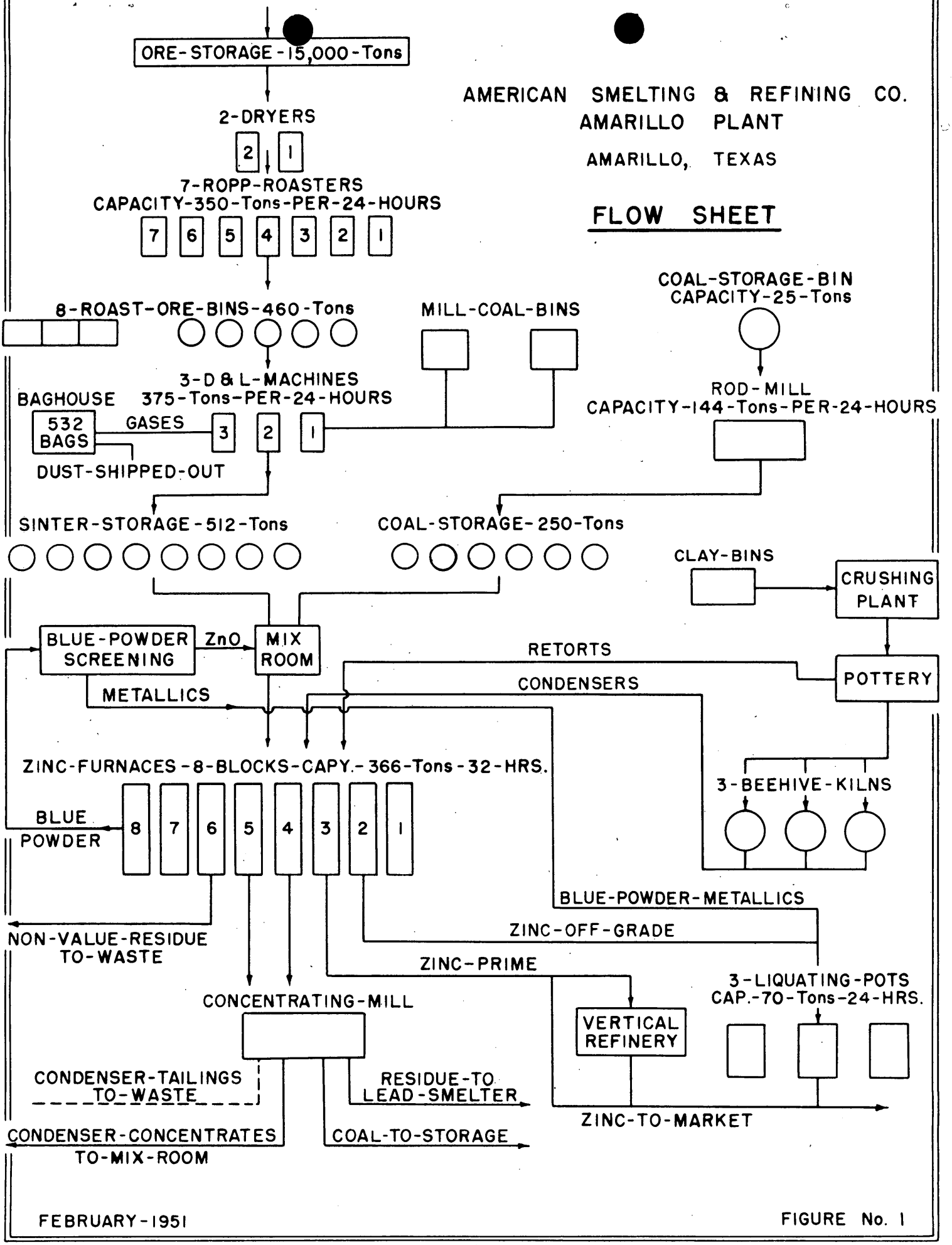

FEBRUARY-1951

FIGURE No. 1

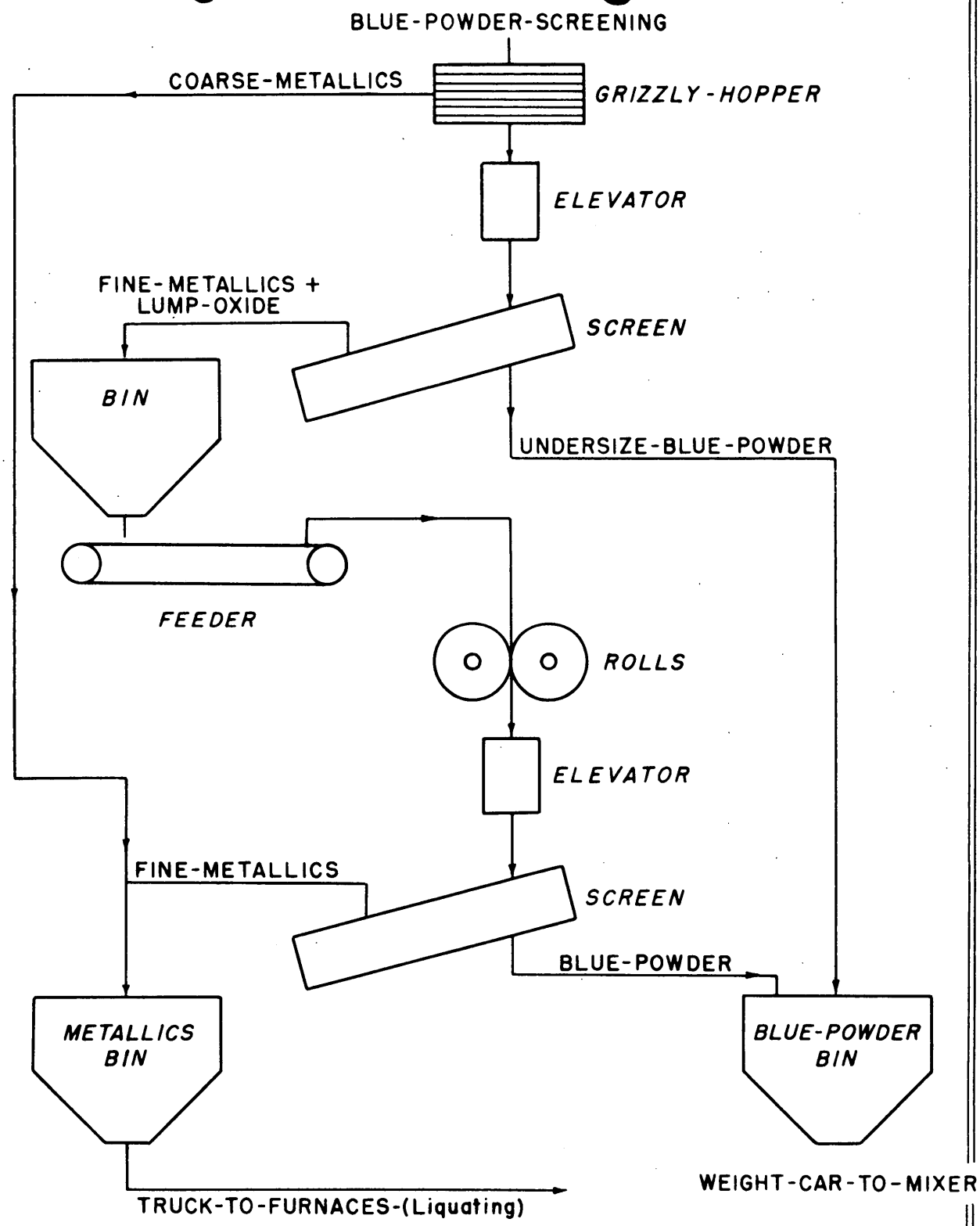

AMERICAN SMELTING & REFINING CO.
AMARILLO PLANT

AMARILLO, TEXAS

DETAIL FLOW SHEET OF SCREENING PLANT

FEBRUARY-1951

FIGURE No. 2

Joplin, Mo.

March 8, 1951

Mr. David Gallagher,
c/o Mr. Olaf N. Rove,
U. S. Geological Survey,
Room 4212,
G. S. Building,
Washington 25, D. C.

Dear Mr. Gallagher:

We are enclosing herewith two copies of the reports on the American Smelting and Refining Company applications - Dockets DMA Nos. 191, 381 and 342. One copy of each report is being sent to Mr. McElvenny at Rolla.

Very truly yours,

William H. Munds

Encl.

cc: Mr. L. T. McElvenny

FORM NSRB-142 (Nov. 1950)

UNITED STATES OF AMERICA
EXECUTIVE OFFICE OF THE PRESIDENT
NATIONAL SECURITY RESOURCES BOARD

Report and Recommendation on Application For Necessity Certificate pursuant to the provisions of Section 124A of the Internal Revenue Code

To: National Security Resources Board

From:

Commerce [ ] Agriculture [ ]

Interior [X] D.T.A. [ ]

[ ]

NSRB FILE NO. TA-
[Date Received]

Date of this Report and Recommendation: February 16, 1952

Name and address of Applicant: American Smelting and Refining Company
120 Broadway, New York City 5, New York

1. Discuss necessity in interest of national defense by applying criteria set forth in Sec. 600.2(a) and (b) of Regulation. Without being limited thereto, discussion should include (a) the reason why materials or services are required in the interest of national defense during the emergency period, (b) over-all shortage of facilities to produce against requirements for such materials or services, (c) shortages for regional, stand-by, prospective, or other requirements in the interest of national defense during theemergency period, (d) possibility of satisfying such shortages by fuller utilization of existing facilities, such as by reasonable conversions or use of multiple shifts, (e) extent to which applicant's production will meet such shortages and requirements, and (f) applicant's statements as to necessity and as to percentage of his production in the interest of national defense during the emergency period. If denial is to be recommended on basis of failure to meet the criteria, treatment of further questions in this report may be unnecessary.

1. The facilities listed in Appendix A of this application are required to increase production of plant products, viz., electrolytic zinc and electrolytic cadmium, which products are necessary for the production of materials directly required in the interest of national defense during the emergency period. Cadmium is listed as a scarce metal and zinc is listed as both scarce and critical by the munitions board. Special high grade zinc as produced in the applicant's plant at Corpus Christi, Texas, is used in die casting and high grade brass alloys.

The plant is now operating at top capacity 24 hours per day, 7 days per week. The facilities listed in Appendix A comprise 3 component parts of a new addition to the zinc sulphate purification plant, which is a bottle neck to increased production. These parts are therefore necessary in the program to increase capacity.

The applicant's statements, in 2 of application, were verified by the investigator except that he was not shown a government request for increased production. Statements made under 3 of the application were verified from company records as to present average production, and from technical examination as to probable increased production by said facilities.

2. Identify, by Appendix A number, all facilities for which certification is sought (including land) which are not considered necessary in whole or in part, for the production planned, giving reasons.

2. None.

3. State results of investigation as to whether applicant has available any idle facilities which will serve same purpose as those for which certification is sought.

3. None.

4. State results of investigation as to whether applicant is obtaining fullest utilization of facilities now in production (other than those for which certification is sought) and discuss factors, such as multiple, 7 days a week.

4. Present facilities are being used to maximum capacity 24 hours a day, 7 days a week.

5. State results of investigation as to whether applicant is able to utilize the facilities of subcontractors to produce all or part of the materials

5. There are no subcontractors furnishing such service in the vicinity.

6. If a question of military security is involved, state results of investigation as to location of facilities with regard thereto.

6. None known.

7. State results of investigation as to location of facilities so far as availability of manpower is concerned.

7. None required. Construction labor will be furnished by the plant maintenance department.

8. State results of investigation as to adequacy of housing, transportation, and other community facilities for applicant's employees at this location.

8. None anticipated.

9. State results of investigation as to adequacy of transportation facilities required for operation of facilities sought to be certified.

9. None required.

10. State results of investigation as to adequacy of water supply and treatment facilities, fuel, electric power and other utilities, and raw materials, for operation of facilities sought to be certified.

10. Water supply is ample in normal years, scarce during dry periods. Emergency supply is provided for in the company's purification plant located on the outlet of Corpus Christi sewer. Other utilities and raw materials are ample.

11. State results of investigation as to whether further expansion in addition to that for which certification is sought at this plant location will be limited by any prospective shortages of any production factor.

11. It is possible that some addition to present facilities for roasting, leaching, and filtering will be needed for an increase in production beyond that presently planned.

12. State results of investigation as to competency of applicant to manage effectively the proposed expanded facilities, taking into consideration his past performance record, if any, and any other qualifications.

12. Management is competent.

13. State whether the opportunity of small business to participate in the expansion of production, and the promotion of competitive enterprise, have been considered and how such considerations have been weighed in developing the recommendation on this application.

13. There are no independent facilities for purification in the vicinity even if economy was ignored. Products are sold on open market; therefore small business has access thereto just the same as large business does.

14. Give details of any government participation in financing the cost of facilities.

14. No government participation in financing was in evidence.

15. In case of purchase of land, buildings, second-hand equipment, and productive assets of going concerns, state results of investigations as to:

a. Relationship between parties to transaction:

15. a. No land or second-hand equipment is concerned. An addition to the building which houses the present unit is necessary because there is not sufficient room within the present building for the new facilities. The new building will be of steel frame construction sided with painted iron. For the present no roof is planned.

b. Reasons why use of property not available by lease:

c. Increase in usefulness for defense purposes resulting from acquisition:

d. Estimated value remaining after five years:

Land $_____ Buildings $_____

16. List replacements by Appendix A number, indicating those which would have been made regardless of the defense effort, and which are to be denied. Similarly, indicate those which are extraordinary and are necessitated by reason of the defense effort, giving reasons and percentage recommended for certification.

17. Discuss the possible uses of the facilities for other than defense purposes at the end of five years. Do not limit to usefulness to applicant. The discussion should include, but is not limited to (a) the range of materials and services for which the facilities can be used, (b) the nature and extent of the conversion required to produce such materials and services, (c) the prospective market for such materials and services, (d) the forced sale value of the facilities at the end of five years, (e) the likelihood, if any, that the applicant will continue to use the facilities profitably after five years, whether as an integrated part of his other operations or otherwise, (f) the likelihood, if any, that the applicant would have acquired the facilities regardless of certification, and (g) an analysis of applicant's answer to Question 16 of the application form.

16. Building, tanks, and Shriver press listed in Appendix A constitute a new addition to the plant purification unit and are in no way replacing other equipment. The present purification plant is operated at peak capacity 24 hours per day, 7 days each week. It is therefore unable to purify the additional amount of zinc sulphate solution required to increase production of zinc and cadmium. The new addition is ample to furnish additional capacity for estimated increased production.

17. Purification capacity furnished by the new facilities will, if required, be used within the present plant for emergency or peacetime production at the end of 5 years, standby service if demand decreases, or the facilities can be sold for other leaching purposes. At forced sale (after 5 years of use) the facilities would be worth approximately $10,000.

The installation of these facilities was planned and approved before this application was presented, therefore it is evident that facilities would have been installed regardless of certification.

The company's answer to question 16 is correct.

18. For the purpose of collecting facts pertaining to this application the plant was investigated February 9, 1951. Mr. C. M. Waterman, plant manager, frankly discussed questions and conducted the writer through the plant.

RECOMMENDATION

It is recommended that: 100 percent of the facilities listed in Appendix A of DMA-191, TA-556 be certified as necessary to the defense effort during the emergency period.

for the following principal reasons:

(1) Zinc and cadmium are listed by the munitions board respectively as critical and scarce.
(2) The facilities answer requirements listed in criteria for determination of necessity Part 600.2, Chapter VI, Title 32A, National Defense Appendix.
(3) The zinc sulphate purification unit has been working at top capacity, 24 hours per day, 7 days per week, for the past two years. Without increased capacity in zinc sulphate purification no increased production of zinc or cadmium can be realized.

18. State any other factors having a bearing on consideration of application.

RECOMMENDATION

It is recommended that:

(Write above line: "Application Be Denied" or "Facilities Be Certified"; in latter case adding percentage recommended)

for the following principal reasons:

Subject to the following percentages of certification as to land, buildings, second-hand facilities, other productive assets, and replacements, as indicated:

And subject to the following deletions:

William B. Espenshade
Examiner

Approved by:

Title

FORM NSRB-142
(Nov. 1950)

UNITED STATES OF AMERICA
EXECUTIVE OFFICE OF THE PRESIDENT
NATIONAL SECURITY RESOURCES BOARD

Report and Recommendation on Application for Necessity Certificate pursuant to the provisions of Section 124A of the Internal Revenue Code

To: National Security Resources Board

From:

Commerce [ ] Agriculture [ ]

Interior [x] D.T.A. [ ]

[ ]

NSRB FILE NO. TA-557
(Date received)

Date of this Report and Recommendation: February 15, 1951

Name and Address of Applicant: American Smelting and Refining Company
120 Broadway, New York City 5, New York

1. Discuss necessity in interest of national defense by applying criteria set forth in Sec. 600.2 (a) and (B) of Regulation. Without being limited thereto, discussion should inclue (a) the reason why materials or services are required in the interest of national defense during the emergency period, (b) over-all shortages of facilities to produce against requirements for such materials or services, (c) shortages for regional, stand-by, prospective, or other requirements in the interest of national defense during the emergency period, (d) possibility of satisfying such shortages by fuller utilization of existing facilities, such as by reasonable conversion or use of multiple shifts, (e) extent to which applicant's production will meet such shortages and requirements and (f) applicant's statements as to necessity and as to percentage of his production in the interest of national defense during the emergency period. If denial is to be recommended on basis of failure to meet the criteria, treatment of further questions in this report may be unnecessary.

1. The facilities listed in Appendix A of this application are required (1) to assure maximum production of commodities by existing plant installations and (2) to increase the production of the plant products, viz., electrolytic zinc, cadmium, and sulphuric acid, which products are necessary for the production of materials directly required in the interest of national defense during the emergency period.
Zinc and cadmium are listed as scarce metals; zinc is listed as a critical metal; increased production of both is required during the emergency. Special high grade zinc, the electrolytic zinc produced in the applicant's plant, is now used in die casting and special high grade brass alloys. The plant is now operating 24 hours a day, 7 days a week, and at 10 percent overload according to plant manager. The facilities listed in Appendix A comprise five component parts of a new 5,000 KW electric power generating unit designed to (1) eliminate the overload on the presently installed generating equipment, and (2) to provide power for additional production of zinc, cadmium and sulphuric acid, and (3) to provide a reserve of standby power for maximum operating time.

Seq. 4723

The applicant's statements under 2 of the application were verified by the investigator excepting that he was not shown a government request for expansion of production. Applicant's statements under 3 of the application were varified from company records as to present average production and from technical explanations as to probable increased production due to the increased facilities.

2. Identify, by Appendix A number, all facilities for which certification is sought (including land) which are not considered necessary in whole or in part, for the production planned, giving reasons.

2. None

3. State results of investigation as to whether applicant has available any idle facilities which will serve same purpose as those for which certification is sought.

3. None

4. State results of investigation as to whether applicant is obtaining fullest utilization of facilities now in production (other than those for which certification is sought) and discuss factors, such as multiple shifts, which may be employed.

4. Present facilities are being used to maximum capacity, and are being utilized 24 hours a day, 7 days a week.

5. State results of investigation as to whether applicant is able to utilize the facilities of subcontractors to produce all or part of the materials or services to be produced.

5. There is a limited amount of electric power available from the Corpus Christi Power Company at a price which is double that at which American Smelting and Refining Company is able to produce it.

6. If a question of military security is involved, state results of investigation as to location of facilities with regard thereto.

6. None known.

7. State results of investigation as to location of facilities so far as availability of manpower is concerned.

7. No increase in manpower is needed, because the plant maintenance crew will do the work.

8. State results of investigation as to adequacy of housing, transportation, and other community facilities for applicant's employees at this location.

8. No increase in necessary housing facilities is anticipated.

9. State results of investigation as to adequacy of transportation facilities required for operation of facilities sought to be certified

9. Transportation facilities for 300 additional tons of raw materials and 400 tons of increased output per month should be easily handled by the railroad serving the plant.

10. State results of investigation as to adequacy of water supply and treatment facilities, fuel, electric power and other utilities, and raw materials. for operation of facilities sought to be certified.

10. Water supply is ample in normal seasons, scarce in times of drouth. A water purification plant has been constructed by the company at a cost of $235,000 on the outlet of Corpus Christi sewer for emergency use. Other utilities and raw materials are ample.
Present electric power plant consists of 5 direct current turbro generators with rated capacity of 2,500 KW each, or a total of 12,500 KW, and 2 alternating current turbro generators rated at 2,500 K.V.A. each, or a total of 5,000 K.V.A. Management states that the electric plant has operated under a ten percent overload for the past 2 years.

11. State results of investigation as to whether further expansion in addition to that for which certification is sought at this plant location will be limited to any prospective shortages of any production factor

11. It is possible that it will be necessary to install additional reasters, leaching tanks and filters before a great amount of increased production can be realized.

12. State results of investigation as to competency of applicant to manage effectively the proposed expanded facilities, taking into consideration his past performance record, if any, and any other qualifications.

12. Present plant has been managed competently since 1942.

13. State whether the opportunity of small business to participate in the expansion of production, and the promotion of competitive enterprise, have been considered and how such considerations have been weighed in developing the recommendation on this application.

13. Excepting that part of the zinc which goes into the Government stockpile, the products of the plant are sold on the open market to consumers both large and small. The raw material to the plant is produced at mines owned by American Smelting and Refining Company in Mexico, Arizona and New Mexico.

14. State details of any government participation in financing the cost of facilities.

14. None involved.

15. In case of purchase of land, buildings, second-hand equipment, and productive assets of going concerns, state results of investigations as to:

a. Relationship between parties to transaction:

15. a. No land, building, or second-hand equipment is involved.

b. Reasons why use of property not available by lease:

c. Increase in usefulness for defense purposes resulting from acquisition:

d. Estimated value remaining after five years:

Land $_____ Buildings $_____

16. List replacements by Appendix A number, indicating those which would have been made begardless of the defense effort, and which are to be denied. Similarly, indicate those which are extraordinary and are necessitated by reason of the defense effort, giving reasons and percentage recommended for certification,

17. Discuss the possible use of the facilities for other than defense purposes at the end of five years. Do not limit to usefulness to applicant. The discussion should include: but is not limited to (a) the range of materials and services for which the facilities can be used, (b) the nature and extent of the conversion required to produce such materials and services, (c) the prospective market for such materials and services, (d) the forced sale value of the facilities at the end of five years, (e) the likelihood, if any, that the applicant will continue to use the facilities profitably after five years, whether as an integrated part of his other operations or otherwise, (f) the likelihood, if any, that the applicant would have acquired the facilities regardless of certification and (g) an analysis of applicant's answer to Question 16 of the application form.

16. All five facilities listed in Appendix A constitute a single new power unit and are replacing no existing facilities.

17. The electric power generated by the new installation will be used within the company's electrolytic plant if required at the end of five years, or can be distributed to consumers other than the American Smelting and Refining Company depending on local power demands at the time. At forced sale (at the end of 5 years of use) the facilities should bring $250,000. The installation of these facilities was planned and approved before this application was presented, therefore it is evident that the facilities would have been installed regardless of certification.
The company's answer to question 16 is correct but incomplete in that it failed to provide for possible sale of power to outside consumers.

18. For the purpose of collecting facts concerning this application the plant was inspected on February 9, 1951. Mr. C. N. Waterman, plant manager, frankly discussed questions and conducted the examiner through the plant. The fact that 1250 KW of new electric power was sufficient to produce 270 tons of increased zinc per month was discussed with Mr. Waterman who stated that he was aware of the point but had estimated an increase of 150 tons per month because he was not sure of the ultimate capacity of all complementary equipment.

RECOMMENDATION

It is recommended that: 100 percent of facilities listed in Appendix A of DMA-381, TA-557 be certified as necessary to the defense effort during the emergency period.

for the following principal reasons:

Although A. S. & R. Co. no doubt expects increased demand for its products to continue beyond the period of the present emergency, it is nevertheless entitled to tax relief because: zinc and cadmium are listed as critical and scarce by the Munitions Board and therefore the Company's efforts to insure present rate of production by relieving overload on the existing plant, provide for a minimum of new production amounting to 150 tons of high grade zinc, 1 ton of electrolytic cadmium, and 250 tons of pure sulphuric acid per month, and provide stand-by power, to which it is certainly entitled on a plant of this size, conform to requirements as listed under Part 600.2, Chapter VI of Title 32A, National Defense Appendix; Criteria for determination of necessity.

18. State of any other factors having a bearing on consideration of application.

RECOMMENDATION

It is recommended that:

(Write above line: "Application to be Denied" or "Facilities be Certified"; in latter case adding period stage recommended)

for the following principal reasons:

Subject to the following percentages of certification as to land, buildings, second-hand furniture facilities, other productive assets, and replacements, as indicated:

And subject to the following deletions:

William H. Mynard
Examiner

Approved by:

Title:

FORM NSRB-142 (Nov. 1950)

UNITED STATES OF AMERICA
EXECUTIVE OFFICE OF THE PRESIDENT
NATIONAL SECURITY RESOURCES BOARD

Report and Recommendation on Application For Necessity Certificate pursuant to the provisions of Section 124A of the Internal Revenue Code

To: National Security Resources Board

From:

Commerce [ ] Agriculture [ ]

Interior [X] D.T.A. [ ]

[ ]

NSRB FILE NO. TA-[illegible]

(Date Received)

Date of this Report and Recommendation: February 15, 1951

Name and address of Applicant: American Smelting and Refining Company
120 Broadway, New York City 5, New York

1. Discuss necessity in interest of national defense by applying criteria set forth in Sec. 600.2(a) and (b) of Regulation. Without being limited thereto, discussion should include (a) the reason why materials or services are required in the interest of national defense during the emergency period, (b) over-all shortage of facilities to produce against requirements for such materials or services, (c) shortages for regional, stand-by, prospective, or other requirements in the interest of national defense during theemergency period, (d) possibility of satisfying such shortages by fuller utilization of existing facilities, such as by reasonable conversions or use of multiple shifts, (e) extent to which applicant's production will meet such shortages and requirements, and (f) applicant's statements as to necessity and as to percentage of his production in the interest of national defense during the emergency period. If denial is to be recommended on basis of failure to meet the criteria, treatment of further questions in this report may be unnecessary.

1. The facilities listed in Appendix A of this application are required to increase production of prime western zinc and residues of copper, lead, and cadmium listed as scarce by the Munitions Board and required in the interest of national defense during the emergency period.

The plant is now operating 4 blocks of retorts 24 hours per day, 7 days per week. Mechanical charging facilities installed on one block of furnaces and used under actual operating conditions for a sufficient period of time to disclose defects in the system and benefits to be derived therefrom have proved that a 7 percent increase in capacity can be obtained by introducing mechanical charging on all blocks. It has also been proved that lumps of metallic zinc and zinc oxide in recharged blend powder interfere with the efficiency of mechanical chargers.

The facilities listed in Appendix A comprise a complete new unit to grind, screen and separate blend powder into coarse zinc metallic for

more efficient treatment by liquation, and fine zinc oxide which will not interfere with mechanical charging.

The applicant's statements under 2 of application were verified by the investigator excepting that he was not shown a government request for expansion of production. Applicant's statements under 3 of application were verified from company records as to present production and by technical explanation as to probable increase in production due to the increased facilities.

2. Identify, by Appendix A number, all facilities for which certification is sought (including land) which are not considered necessary in whole or in part, for the production planned, giving reasons.

2. None.

3. State results of investigation as to whether applicant has available any idle facilities which will serve same purpose as those for which certification is sought.

3. None.

4. State results of investigation as to whether applicant is obtaining fullest utilization of facilities now in production (other than those for which certification is sought) and discuss factors, such as multiple

4. Present facilities are being used 24 hours a day, 7 days per week.

5. State results of investigation as to whether applicant is able to utilize the facilities of subcontractors to produce all or part of the materials or services to be produced.

5. The facilities listed in Appendix A of the application are those required in a new addition within an existing plant. It would therefore not be feasible to utilize those of outside contractors even though such did exist.

6. If a question of military security is involved, state results of investigation as to location of facilities with regard thereto.

6. No military security known to be involved.

7. State results of investigation as to location of facilities so far as availability of manpower is concerned.

7. Nine man shifts of labor per day will be saved. Construction labor will be supplied by plant maintenance department.

8. State results of investigation as to adequacy of housing, transportation, and other community facilities for applicant's employees at this location.

8. Increased need not anticipated.

9. State results of investigation as to adequacy of transportation facilities required for operation of facilities sought to be certified.

9. Adequate.

10. State results of investigation as to adequacy of water supply and treatment facilities, fuel, electric power and other utilities, and raw materials, for operation of facilities sought to be certified.

10. Water supply has recently been increased in company drilled wells by 3 or 4 times present requirements. Other utilities and raw materials are ample.

11. State results of investigation as to whether further expansion in addition to that for which certification is sought at this plant location will be limited by any prospective shortages of any production factor.

11. Not as anticipated.

12. State results of investigation as to competency of applicant to manage effectively the proposed expanded facilities, taking into consideration his past performance record, if any, and any other qualifications.

12. Plant has been under competent management since 1927.

13. State whether the opportunity of small business to participate in the expansion of production, and the promotion of competitive enterprises, have been considered and how such considerations have been weighed in developing the recommendation on this application.

13. Raw materials to this plant are furnished by independent producers both large and small. Except that zinc, which is produced for the Government, prime western zinc is sold on the open market and therefore small business should benefit by having access to increased supplies, which can in turn be used to produce galvanized products for civilian as well as for armed service use as long as it is allowed by the Government to remain on the free market.

14. Give details of any government participation in financing of cost of facilities.

14. No government financing was detected.

15. In case of purchase of land, buildings, second-Hand equipment, and productive assets of going concerns, state results of investigations as to:

a. Relationship between parties to transaction:

15. No purchase of land or second-hand equipment is involved. New building should last indefinitely with proper maintenance.

b. Reasons why use of property not available by lease:

c. Increase in usefulness for defense purposes resulting from acquisition:

d. Estimated value remaining after five years:

Land $_____ Buildings $_____

16. List replacements by Appendix A number, Indicating those which would have been made regardless of the defense effort, and which are to be denied. Similarly, indicate those which are extraordinary and are necessitated by reason of the defense effort, giving reasons and percentage recommended for certification.

17. Discuss the possible uses of the facilities for other than defense purposes at the end of five years. Do not limit to usefulness to applicant. The discussion should include, but is not limited to (a) the range of materials and services for which the facilities can be used, (b) the nature and extent of the conversion required to produce such materials and services, (c) the prospective market for such materials and services, (d) the forced sale value of the facilities at the end of five years, (e) the likelihood, if any, that the applicant will continue to use the facilities profitably after five years, whether as an integrated part of his other operations or otherwise, (f) the likelihood, if any, that the applicant would have acquired the facilities regardless of certification, and (g) an analysis of applicant's answer to Question 16 of the application form.

16. Facilities listed in Appendix A do not contain any items for replacements; they comprise 3 units of a complete new installation housed within an extension to the present storage and mixing plant building.

17. The facilities comprising this installation will be used within the Amarillo zinc smelter as long as mechanical charging is practiced. The smelter was built in 1922 and has operated continuously to the present time. At forced sale, at the end of 5 years, the facilities should bring approximately $15,000.

Installation of these facilities was planned and approved before this application was received, therefore it is evident that the facilities would have been installed regardless of certification.

The company's answer to question 16 in the application is correct.

18. For the purpose of collecting facts concerning this application the plant was inspected on February 5, 1951. E. T. Bruderlin, plant manager, answered all questions freely and conducted the examiner through the plant.

Owing to the fact that mechanical chargers, auxiliary conveyor belt and discharge are installed on but one block of furnaces at present, it is assumed that an additional expenditure estimated at $75,000 will be required to install like facilities on the remaining 7 blocks of furnaces before full increased production amounting to 200 tons of prime western zinc per month will be realized. (7 percent of 3,000 ((produced by 8 blocks)) = 210 tons per month.)

18. State any other factors having a bearing on consideration of application.

RECOMMENDATION

It is recommended that:

(Write above line: "Application Be Denied" or "Facilities Be Certified"; in latter case adding percentage recommended)

for the following principal reasons:

RECOMMENDATION

It is recommended that: Facilities listed in Appendix A of this application be certified as necessary in the interest of national defense during the emergency to the amount of 100%,

for the following principal reasons:

(1) Zinc is listed by the Munitions Board as both scarce and critical.
(2) The United States Government stock-piles ore at this plant to be refined to Prime Western Zinc.
(3) Although the screening plant will not by itself increase zinc production by 200 tons per month, it is of first importance because it is necessary to all mechanical chargers, and will be one of the principal factors in increasing production by that amount when all mechanical chargers are installed.
(4) It conforms to requirements listed under Criteria for determination of necessity Part 600.2, Chapter VI, Title 32A, National Defense Appendix.

Subject to the following percentages of certification as to land, buildings, second-hand facilities, other productive assets, and replacements, as indicated:

And subject to the following deletions:

William H. Mundel
Examiner

Approved by:

Title

Joplin, Mo. March 8, 1951

TELEGRAM

Mr. Otto Herres,
Chief, Lead-Zinc Branch,
Defense Minerals Administration,
Washington 25, D. C.

RETEL DMA DOCKETS 191, 342, 381 COMPLETED THIS OFFICE. MAILED

TO DAVID GALLAGHER CARE OF O. N. ROVE USGS TODAY.

William H. Munds
Mining Engineer,
Defense Minerals Administration,
Joplin, Mo.

Charge to U. S. Geological Survey, Joplin, Mo. 221 W. 3rd St.

CLASS OF SERVICE

This is a full-rate Telegram or Cablegram unless its deferred character is indicated by a suitable symbol above or preceding the address.

WESTERN UNION

W. P. MARSHALL, PRESIDENT

1201

MAR 8 1951

SYMBOLS
DL = Day Letter
NL = Night Letter
LC = Deferred Cable
NLT = Cable Night Letter
Ship Radiogram

The filing time shown in the date line on telegrams and day letters is STANDARD TIME at point of origin. Time of receipt is STANDARD TIME at point of destination

SA168 PC254 WM92

W. IDA063 GOVT PD=ID WASHINGTON DC 8 218P= 1951 MAR 8 PM 2 44

DAVID GALLAGHER=

US GEOLOGICAL SURVEY 221 WEST THIRD ST JOPLIN MO=

AMERICAN SMELTING AND REFINING COMPANY MADE NUMEROUS REQUESTS RE: STATUS DMA DOCKETS 191, 342, 343. WHEN WILL REPORT FORM NSRB 142 BE COMPLETED ON THESE APPLICATIONS?

OTTO HERRES CHIEF LEAD ZINC BRANCH DEFENSE MINERALS ADMINISTRATION=

THE COMPANY WILL APPRECIATE SUGGESTIONS FROM ITS PATRONS CONCERNING ITS SERVICE

STANDARD FORM No. 14
APPROVED BY THE PRESIDENT
MARCH 10, 1926

TELEGRAM

OFFICIAL BUSINESS—GOVERNMENT RATES

FROM [illegible]

BUREAU
14-111007 [illegible]
CHG. APPROPRIATION [illegible]
[illegible] OFFICE OF THE PRESIDENT
(ALLOTMENT TO INTERIOR) 1951 10.1

U. S. GOVERNMENT PRINTING OFFICE 10—1723

DAVID GALLAGHER
U. S. [illegible]
221 [illegible] STREET
JOPLIN, MO.

[illegible] PUBLIC [illegible] HAS [illegible] TO [illegible]

[illegible] 101, 342, 343. [illegible] 102 [illegible]

[illegible] APPLICATION [illegible]

/s Otto Herres

OTTO HERRES
CHIEF, [illegible]
[illegible] ADMINISTRATION

[illegible] N/mp
CC: David Gallagher (2)
R. H. Hote
Otto Herres
L. F. Strobel
Files

STANDARD FORM No. 14
APPROVED BY THE PRESIDENT
MARCH 10, 1926

TELEGRAM

OFFICIAL BUSINESS—GOVERNMENT RATES

FROM [redacted]

BUREAU
14-1110037 [redacted]

CHG. APPROPRIATION [redacted]
[redacted] 1051 10.1

U. S. GOVERNMENT PRINTING OFFICE 10—1723

[redacted]
[redacted]
[redacted]
[redacted]

[redacted]

[redacted] 101, 102, 103. [redacted] 102 [redacted]

[redacted]

/s Otto Herres

[redacted]
[redacted]
[redacted]

[redacted]
cc: David Gallagher (2)
R. T. Hote
Otto Herres
E. B. Strobel
Files

FEB 28 1951

UNITED STATES
DEPARTMENT OF THE INTERIOR
BUREAU OF MINES

P. O. BOX 136
ROLLA, MISSOURI

February 26, 1951

Memorandum

To: David Gallagher

From: L. T. McElvenny

Subject: Dockets D.M.A.-381, TA-557; D.M.A.-191, TA-556; D.M.A.-342, TA-1055

I have reviewed and returned to Bill Munds his NSRB-142 reports on the subject dockets. He has been advised to submit them to you for criticism.

The most important item of Form 142 is titled "Recommendations," (page 6), particularly as to the percentage recommended to be certified.

For my part, I am uncertain as to what the field team or examiner is to base judgment on--whether on the necessity of the facilities as a whole or on only that portion which will create new production.

Take, for example, D.M.A.-381, a new 5,000-kilowatts power plant which is to cost $745,000. Some of the power (the company said 1,250-kilowatts) will represent new zinc production; about 1,750 kilowatts (?) is to relieve present plant overload; and 2,000 kilowatts is standby power. Should 25 percent, 1,250/5,000, of $745,000 be certified for accelerated amortization, or 60 percent $\left(\frac{1,250 + 1,750}{5,000}\right)$, or 100 percent?

Docket D.M.A.-342 deals with a new installation for crushing and screening blue powder to prevent its clogging the conduits of a proposed mechanical retort feeder. The plant operates eight blocks of retorts, only one of which is being fed mechanically at present. In reality, the facilities listed in the application are now serving one-eighth of the retorts and will be of only limited service until provision is made for mechanical feeding of the other seven blocks of retorts. The question is: Shall we certify 100 percent of the installation or only one-eighth with a proviso that the percentage be increased as other blocks of retorts are connected for mechanical feeding?

I feel the need of our seeking advice on this matter of percentage.

L. T. McElvenny

L. T. McElvenny

UNITED STATES
DEPARTMENT OF THE INTERIOR
BUREAU OF MINES

P. O. BOX 136
ROLLA, MISSOURI

FEB 28 1951

February 26, 1951

Memorandum

To: William H. Munds

From: L. T. McElvenny

Subject: Dockets D.M.A.-381, TA-557; D.M.A.-191, TA-556; D.M.A.-342, TA-1055

Enclosed please find the subject dockets together with the corresponding report forms NSRB-142.

I have indicated some changes and additions in your reports--most of them for clarification purposes. After you have cleared up the affected points, please go over the reports with Mr. Gallagher. He probably will make further alterations and additions.

Attached is a copy of my February 26 memo to him.

L. T. McELVENNY
L. T. McElvenny

Enclosures

Copy to: Mr. David Gallagher

Gallagher
JC
mB

UNITED STATES
DEPARTMENT OF THE INTERIOR
BUREAU OF MINES

P. O. BOX 136
ROLLA, MISSOURI

February 2, 1951

Memorandum

To: Wm. H. Munds

From: L. T. McElvenny

Subject: Report on American Smelting and Refining Co.'s Electrolytic Zinc Plant, Corpus Christi, Texas

Standard forms are provided for reporting to N.S.R.B. the results of investigations of applications for Necessity Certificates. You will, of course, complete those forms after examining the American Smelting and Refining Co.'s plants at Amarillo and Corpus Christi.

In addition, however, you should make separate brief reports on the plants for D.M.A. and the Mining Branch, Region VI, which will contain more general information than is requested in the standard report forms of N.S.R.B.

Your auxiliary reports could cover, among others, the following items:

1. Description, location and history of the plant.
2. Its purpose.
3. Character, source, and quantity of raw material.
4. Character, quantity and destination of products.

In the case of the power plant at Corpus Christi, report on the following additional items:

1. Function of the proposed new power plant.
2. Intended use of new electric power and apportionment to each use.
3. Tons of zinc that can be precipitated by new power allocated to that purpose.
4. Are there existing precipitation tanks and facilities for utilizing the new power for increasing the production of Special High-Grade Zinc? In arriving at the answer to this question, it would be well to describe the existing precipitation facilities, the power consumed by them, and the production capacity in tons of zinc.

The main purpose of the investigation is to determine the amount of new zinc directly attributable to the new facilities, or the necessity for installing the new facilities in order to maintain production by present facilities. If the new power plant is designed as a standby unit, we will have to question Washington as to its applicability for certification.

L. T. McELVENNY

L. T. McElvenny

Copy to: Gallagher

DG

UNITED STATES
DEPARTMENT OF THE INTERIOR
BUREAU OF MINES
P. O. BOX 136
ROLLA, MISSOURI

February 1, 1951

Memorandum

To: David Gallagher

From: L. T. McElvenny

Subject: Dockets DMA-381, TA-557; DMA-191, TA-556; DMA-342, TA-1055

Attached are files on the subject dockets which were mailed to me at Rolla by M. Howard Berliner as per his letter of January 26, 1951.

A copy of each docket has been extracted from the original file and placed in the care of Wm. H. Munds to whom I have assigned the investigations of the applications. He has been instructed to return the three copies to you when his report of investigations is completed.

Munds will go to Amarillo probably February 5 and will visit the American Smelting and Refining Co. plant there before proceeding to Corpus Christi.

L. T. McElvenny

L. T. McElvenny

Attachments

February 1, 1951

Memorandum

To: Wm. H. Munds

From: L. T. McElvenny

Subject: Dockets D.M.A.-381, TA-557; D.M.A.-191, TA-556; D.M.A.-342, TA-1055

Attached are single copies of each of the subject dockets which are composed of Form NSRB-140 and Appendix "A" and constitute applications for necessity certificates pursuant to provisions of Sec. 124A of Internal Revenue Code presented by the American Smelting and Refining Co.

The company seeks to amortize at accelerated rate the cost of installing certain facilities at its plants in Corpus Christi and Amarillo, Texas.

D.M.A. of Region VI has been instructed to make the necessary investigations and to prepare pertinent reports and recommendations on the applications. You are hereby assigned the duty of making these investigations. You will report your findings to me for consideration.

Please go first to Amarillo, planning on arriving there February 5 if possible, and on visiting Director Seibel before visiting the applicant's smelting plant. You may use your own discretion as to your itinerary from there on, reporting your intended movements to me.

These are the first applications referred to our Region. Moreover they deal with a phase of Government assistance under D.M.A. of which we know little as to methods of approach. But by diligent study of the applications and the instruction sheet and inquiries as to proper procedure when in doubt, I am sure the correct recommendations can be determined.

L. T. McELVENNY

L. T. McElvenny

Attachments 3

Copy to: Mr. Gallagher

DEPARTMENT OF THE INTERIOR
March 3, 1849
ROLLA, MO
MIN BR.
COM BR
REPLY FOR SIG. OF
DATE JAN 29 1951

UNITED STATES
DEPARTMENT OF THE INTERIOR
GEOLOGICAL SURVEY

DMA- U.s Geological Survey
Joplin , Mo.

Jan. 26, 1951

Mr. L.T. McElvenny
U.S. Bureau of Mines
Rolla, Mo.

Dear Mr. McElvenny:

Enclosed are three applications by the American Smelting and Refining Co. for amortization deductions covering proposed installations at their zinc plants at Amarillo and Corpus Christi, Texas. The applications are designated thus:

1. DMA-381, Ta-557
2. DMA-342, Ta-1055
3. DMA-191, Ta-556

There is a letter also from Otto Herres, who sent the applications to this office, which is self-explanatory.

I am forwarding these applications, pursant to your request this morning to Mr. Otto Ruhl, for your perusal of the data and pending the selection of an engineer qualified to make these examinations. Sorry we don't have one here on the job.

Mr. Gallagher who is now in Denver plans to call me with in the next few days, at which time I will notify him of the action taken so far on these applications, and suggest that he get in touch with you.

Very truly yours,

M. Howard Berliner

M. Howard Berliner
DMA-USGS

cc-Otto Herres
files

7

UNITED STATES
DEPARTMENT OF THE INTERIOR
DEFENSE MINERALS ADMINISTRATION
WASHINGTON 25, D. C.

January 19, 1951

Memorandum

To: H. C. Miller
A. B. Needham
David Gallagher

From: Chief, Lead-Zinc Branch

Subject: Necessity Certificates.

Attached are applications for Necessity Certificates pursuant to provisions of Section 124A of Internal Revenue Code which have been submitted by The American Smelting and Refining Company and which relate to installations in your region. You will note that with each application there is a report and recommendation schedule which must be completed and returned to the National Security Resource Board before further action can be taken. Since this report, for the most part, involves a field examination of the plant where the new facilities are to be constructed, I am asking that you arrange to delegate an engineer to the task. When the field examination is completed I would appreciate your returning the documents to me for final review prior to forwarding to the NSRB through the DMA Operating Committee. If you have any questions regarding completion of the report please do not hesitate to let me know.

Otto Herres, Chief
Lead-Zinc Branch DMA

(6)

UNITED STATES
DEPARTMENT OF THE INTERIOR
DEFENSE MINERALS ADMINISTRATION
WASHINGTON 25, D. C.

January 19, 1951

Memorandum

To: H. C. Miller
A. B. Needham
David Gallagher

From: Chief, Lead-Zinc Branch

Subject: Necessity Certificates.

Attached are applications for Necessity Certificates pursuant to provisions of Section 124A of Internal Revenue Code which have been submitted by The American Smelting and Refining Company and which relate to installations in your region. You will note that with each application there is a report and recommendation schedule which must be completed and returned to the National Security Resource Board before further action can be taken. Since this report, for the most part, involves a field examination of the plant where the new facilities are to be constructed, I am asking that you arrange to delegate an engineer to the task. When the field examination is completed I would appreciate your returning the documents to me for final review prior to forwarding to the NSRB through the DMA Operating Committee. If you have any questions regarding completion of the report please do not hesitate to let me know.

Otto Herres

Otto Herres, Chief
Lead-Zinc Branch DMA

UNITED STATES
DEPARTMENT OF THE INTERIOR
OFFICE OF THE SECRETARY
WASHINGTON 25, D. C.

DEC 20 1950

Memorandum

To: Mr. James Boyd, Administrator
Defense Minerals Administration

From: Secretary of the Interior

Subject: Request for report and recommendation to NSRB on application for Necessity Certificate pursuant to provisions of Sec. 124A of Internal Revenue Code submitted by American Smelting and Refining Co. (NSRB File Reference TA-556, December 12, 1950).

I am transmitting to you herewith the subject application which, in accordance with the procedures prescribed in the regulation issued by the NSRB (15 FR 7265), has been referred to us for report and recommendation to be considered by the Chairman of the NSRB, or his duly authorized representative, as certifying authority.

A careful, comprehensive study and evaluation of the proposed project, in relation to each of the criteria specified in the applicable regulation of the NSRB, should be made by you. I shall rely upon you to confer with any other agencies whose interests might be involved.

Please prepare the report and recommendations in such form that I may transmit them over my signature to the Chairman of the NSRB. Attached are copies of Form NSRB-142 for use in connection with the report and recommendations.

(Sgd.) Oscar L. Chapman
Secretary of the Interior

Attachments

DMA-191

LEE, TOOMEY & KENT
1200 EIGHTEENTH STREET, N.W.
WASHINGTON 6, D. C.

December 12, 1950

556

National Security Resources Board,
Executive Office Building,
Washington 25, D. C.

Re: American Smelting and Refining Company

Gentlemen:

On behalf of American Smelting and Refining Company there is enclosed an application for a Necessity Certificate pursuant to the provisions of §124A of the Internal Revenue Code, with respect to building and equipment for purifying additional zinc sulphate solution, as more fully described in the application.

In the event you need any additional information, it would be appreciated if you will get in touch with this office.

Respectfully submitted,

John A. Cardon

DMA-342

1055

LEE, TOOMEY & KENT
1200 Eighteenth Street, N. W.
Washington 6, D. C.

January 2, 1951.

National Security Resources Board,
Executive Office Building,
Washington 25, D. C.

Re: American Smelting & Refining Company

Gentlemen:

On behalf of American Smelting & Refining Company there is enclosed an application for a necessity certificate pursuant to the provisions of §124A of the Internal Revenue Code with respect to facilities for the production of coarse zinc metallics and oxidized zinc bearing fines, as more fully described in the application.

In the event you need any additional information, it would be appreciated if you would get in touch with this office.

Respectfully submitted,

(s) John A. Cardon