DMEA Form 9
Rev. 6/57

UNITED STATES
DEPARTMENT OF THE INTERIOR
Defense Minerals Exploration Administration

OFFICIAL DOCKET FILE 23 JUN 1958 Idm-E NO._____ DMEA NO. 4981

Application
- [ ] Denied
- [ ] Withdrawn

Contract 1218
- [ ] Terminated - Not Certified
- [ ] Terminated - Certified
- [ ] Cancelled
- [ ] Royalty Agreement

The records contained in this file are marked (x) and arranged in this order:

Folder No. 1:

Left Side

Royalty Report of Review May 1967
- [XXX] Royalty Audits 6/9/61 5/29/65 June 1966
- [x] Certification of Discovery 4-5-62
- [ ] Closing Letter
- [X] Cost Audits ...6-3-59 (6/23/58-3/31/59) 5/9/60 5/17/62
- [x] Termination ~~Notice~~ Agreement 3-1-62
- [ ] Recision Notice
- [ ] Assignment of Contract
- [X] Contract Amendments
- [X] Contract with all exhibits and annexes
- [X] Owner's Consent to Lien and Subordination Agreement
- [x] Application and attachments

Right Side

- [ ] Project summary (final)
- [x] Work Comoleted analysis (final) 8-27-62

All other material filed in chronological order including the following reports if checked:
- [ ] Field Team Semi-Annual Report for Certified Project
- [x] Final Field Team Report (Tab) August 1962
- [x] Operator's Final Report (Tab) 11-30-61* (Folder 1-A)
- [ ] Interim Field Team Reports
- [ ] Operator's monthly reports and all attachments
- [X] On-site Exam Report (Tab)
- [ ] Settlement Sheets
- [ ] Drill Logs

Additional Folders: Folder No. 1 - Correspondence 4/15/58 thru 12/31/60
Folder No. 1-A - Correspondence from 1/1/61 to present

*recd. w/R-III memo 2/14/62

Folders No. 2 and 2-A: Reports

Left Side
- [ ] Analysis of Semi-Annual Inspection Reports
- [ ] Project Summary (Interim) by DMEA Engineers

Right Side
- [ ] Field Team Semi-Annual Report for Certified Project
- [X] Field Team Interim Reports
- [X] Operator's Monthly Reports with transmittal, narrative and maps.

Folders No. 4: Maps (Use pocket folder or envelope)

Folders No. 3: Settlement Sheets

Folders No._____: Drill Logs

Folders No._____: Royalty material

17963

UNITED STATES DEPARTMENT OF THE INTERIOR

OFFICE OF SURVEY AND REVIEW
AUDIT OPERATIONS
WASHINGTON, D.C.

Report of Royalty Review-Contract IDM-E1218
Docket No. DMEA-4981 (Lead-Zinc-Copper)
New Park Mining Company (Operator)
Mayflower Mine
Wasatch County, Utah

Report Issued: May 1967

See audit memorandum May 26, 1967
in Folder 1-A

An examination of the cash receipts records in the Branch of Budget and Finance, Administrative Division, U.S. Geological Survey, and a review of the Office of Minerals Exploration contract files pertaining to royalty received by the Government as provided by the subject minerals exploration contract was made at Washington, D.C., on May 22, 1967.

An on-site audit was performed on April 29, 1966, at the Heber, Utah, mine office of Hecla Mining Company, which has operated the Mayflower Mine since November 1961 under an operating agreement with New Park Mining Company, the original Operator specified in the contract. This audit determined that the Government's contribution to exploration costs subject to repayment through royalty on the value of production from that portion of the mine property subject to the contract prior to June 23, 1973, amounted to $133,022.03 of which $100,949.33 had been repaid leaving a balance of $32,072.70 subject to repayment from production after March 31, 1966.

The present review has determined that the latter amount has been paid based on the value of production from the subordinated area of the mine during the months April 1966 through March 1967. In a letter dated February 6, 1967, Hecla Mining Company advised the Field Officer, OME Region II, Denver, Colorado, that their records indicate a balance of $3,138.65 unpaid on the contract

as of February 1, 1967, after application of the remittance for January 1967. In a letter dated February 27, 1967, the Field Officer confirmed the balance due. Hecla paid $2,686 applicable to the value of production during February 1967 and the remaining amount of $452.65 on its settlement for March 1967.

The records of the Branch of Budget and Finance and those of OME Washington, D.C., office indicate that the Government participation in contract exploration costs of $133,022.03 has been fully repaid.

C. E. Fisher, Auditor

Reviewed by:

D. E. Savage, Office of Survey and Review

Docket copy

United States
Department of the Interior

GEOLOGICAL SURVEY

GEOLOGIC DIVISION

OFFICE OF MINERALS EXPLORATION

WASHINGTON, D.C.

Report of Royalty Audit - Contract Idm-E1218
Docket No. DMEA-4981 (Lead-Zinc-Copper)
New Park Mining Company
Mayflower Mine
Wasatch County, Utah

Report Issued: June 1966

United States
Department of the Interior

GEOLOGICAL SURVEY

OFFICE OF THE CHIEF AUDITOR

GEOLOGIC DIVISION

OFFICE OF MINERALS EXPLORATION

WASHINGTON, D.C.

Report of Royalty Audit - Contract Idm-E1218
Docket No. DMEA-4981 (Lead-Zinc-Copper)
New Park Mining Company
Mayflower Mine
Wasatch County, Utah

Report Issued: June 1966

Auditor-in-Charge: Clarence E. Fisher

Report Approved: William T. McClelland, Chief Auditor

Audit Performed During Period: April 18 to May 8, 1966

IN REPLY REFER TO:

UNITED STATES
DEPARTMENT OF THE INTERIOR
GEOLOGICAL SURVEY
WASHINGTON, D.C. 20242

OFFICE OF THE DIRECTOR

June 8, 1966

Memorandum

To: Director

From: Chief Auditor

Subject: Royalty Audit of Contract Idm-E1218
Docket No. DMEA-4981 (Lead-Zinc-Copper)
New Park Mining Company
Mayflower Mine
Wasatch County, Utah

We have made a royalty audit of Contract Idm-E1218 at the Heber, Utah mine office of Hecla Mining Company which company has operated the Mayflower Mine since December 1, 1961, under an operating agreement with New Park Mining Company, the original operator under the exploration contract. This audit related to the period May 1965 through March 1966 and included a review of the Operator's methods used in allocating the value of production from the property between that not subject to Government royalty and that subject to such royalty and the computation of monthly royalty payments made by the Operator. Also, reconciliation was made with the records of the OME offices in Washington, D.C. and Denver, Colorado, and with deposits made by the Branch of Budget and Finance of royalty received.

Previous audits made by OME covered royalty receipts for the period from the date of the exploration contract through April 1965. The present audit extends the period covered by audit through March 1966.

We find that the royalty paid amounting to $36,311.67 applicable to production during this period was proper and in accord with the contract provisions. We also find that total royalty receipts for the period from the date of the contract through March 31, 1966, amounts to $100,949.33.

William T. McClelland

William T. McClelland

TABLE OF CONTENTS

	Page
INTRODUCTION	1
SCOPE OF THE AUDIT	2
AUDIT FINDINGS	3

REPORT OF ROYALTY AUDIT - CONTRACT Idm-E1218
DOCKET NO. DMEA-4981 (LEAD-ZINC-COPPER)
NEW PARK MINING COMPANY
MAYFLOWER MINE
WASATCH COUNTY, UTAH

INTRODUCTION

By memorandum dated April 18, 1966, the Chief, Office of Minerals Exploration (OME), Geologic Division, requested an on-site royalty audit of Contract Idm-E1218. The audit was authorized by the Chief Auditor on April 18, 1966, under Audit Assignment No. 66. The on-site audit was performed on April 29, 1966 at the Heber, Utah, mine office of Hecla Mining Company, which has operated the Mayflower Mine since November 1961 under an operating agreement with New Park Mining Company, the original Operator under the exploration contract.

Previous audits by OME have established the propriety of royalty settlements made by both the original and the present operators from the date of the contract, June 23, 1958 through April 30, 1965. The present audit extends the period covered by audit through March 31, 1966.

Article 8 and Annex II of the contract provide that if the Government makes a certification of discovery or development, the Operator shall pay to the Government a royalty on all minerals mined or produced from the land described in Article 2 and Annex I of the contract within a period of 15 years from the date of the contract, or until the total net amount contributed by the Government to the exploration costs without interest is fully repaid, whichever occurs first.

Annex II also provides for the payment by the Operator of royalty on the value of any production, regardless of where it comes from, that is

transported through any new workings, the cost of which the Government contributed, or any portion of said workings. Annex II further provides for the payment of a 5 percent royalty on the total transportation charges received by the Operator on any production from outside the boundaries of the land described in Article 2 of the contract transported through such workings, in the event that neither the Operator nor any subsidiary or affiliate thereof has any interest in such production.

A certification of discovery or development was issued by the Government on April 5, 1962.

A Report of Review in lieu of final cost audit dated May 17, 1962, found acceptable costs under the exploration contract to be $266,044.06 with the Government's contribution, on a 50 percent basis, being $133,022.03.

The land under the contract consists of all or portions of 23 patented and 3 unpatented claims located in Sec. 34, T. 2 S., R. 4 N., Salt Lake Meridian, Blue Ledge Mining District. Excluded, however, is the area of the claims above the 1880 level and east of a vertical plane at approximately 2,120 feet, S. 65 degrees W. of the Mayflower shaft. At the time the contract was executed the Operator owned part of the land and leased the remainder from the United States Smelting, Refining and Mining Company, which company executed a Consent to Lien and Subordination Agreement on June 13, 1958.

SCOPE OF THE AUDIT

Prior to the on-site audit a statement of royalty received applicable to the period May 1965 through March 1966 was prepared from copies of monthly statements received by the OME Washington, D.C. and Denver, Colorado offices in support of remittances by Hecla Mining Company. All of the data

included in the statement were confirmed by detailed recomputation. Deposits of such royalty receipts were confirmed with the records of the Branch of Budget and Finance. This statement, which is filed as part of the audit workpapers, was reconciled with the production records in the mine office during the on-site audit.

The principal objective of our examination was to confirm the total amount of royalty receipts under this contract as recorded in the Bureau's financial records.

AUDIT FINDINGS

The following is a summary analysis of our findings pertaining to production, value thereof, and royalty paid to the Government through March 31, 1966.

Period	Ore Tons	Value of Production	Royalty Paid
New Park Mining Company			
June 23, 1958 thru Nov. 30, 1961	20,779	$418,690.16	$20,880.97
Hecla Mining Company			
Dec. 1, 1961 thru Apr. 30, 1965	33,031	876,679.16	43,756.69
Totals - prior audits	53,810	$1,295,369.32	$64,637.66
May 1, 1965 thru Mar. 31, 1966	24,366	726,222.22	36,311.67
Totals	78,176	$2,021,591.54	$100,949.33

We find that the balance of royalty due, amounting to $309.05, as disclosed by the last previous audit was paid by the Operator during the period covered by the present audit.

The Operator is mining from areas of the mine not included in the property subject to the provisions of Contract Idm-E1218. Ore produced from such areas is commingled with ore produced from the DMEA area prior to milling. The value of DMEA ore is determined on basis of quantities and weighted assays of such ore as compared with total mine production and weighted assays.

It was determined that no production has been made by other parties and transported through "new-workings" to the cost of which the Government has contributed. Also, it was determined that there had been no production above the 1880 level west of a vertical plane at approximately 2,120 feet, S. 65 degrees W. of the Mayflower shaft.

We find that all production through March 31, 1966 on which the Government is entitled to royalty has been accounted for and proper royalty has been received.

OFFICE OF MINERALS EXPLORATION
CONTRACT ADMINISTRATION AND AUDIT DIVISION

ROYALTY AUDIT CERTIFICATE

I have examined the production and royalty accounts and records pertaining to the value of concentrates produced for the period April 10, 1964, through April 30, 1965, by Hecla Mining Company, Box 320, Wallace, Idaho, from ore mined from Mayflower Mine located in Wasatch County, Utah, on which royalty is payable to the U. S. Government under terms of Contract Idm-E1218, Docket DMEA-4981 (lead-zinc-copper), dated June 23, 1958, as amended, with

New Park Mining Company
907 Walker Bank Building
Salt Lake City, Utah

My examination was made in accordance with generally accepted standards applicable in the circumstances.

This audit established the total value of concentrates applicable to mine production during this period subject to Government royalty to be $357,066.21. Royalty payable to the Government at the rates specified in the contract is $17,853.31.

A prior royalty audit report dated April 29, 1964, found the value of ore and concentrates subject to royalty reported through April 9, 1964, to be $938,303.11 which added to the sales for the subsequent period make a total of $1,295.369.32. The royalty account as of April 9, 1964, was

Total Royalty Payable	$46,784.35
Total Royalty Paid	46,784.35
Balance of Royalty Due	$ -0-

As of May 28, 1965, the royalty account of this project was found to be:

Total Royalty Payable	$64,637.66
Total Royalty Paid	64,328.61
Balance of Royalty Due	$ 309.05

C. E. Fisher, OME Auditor

May 29, 1965

OFFICE OF MINERALS EXPLORATION
CONTRACT ADMINISTRATION AND AUDIT DIVISION

ROYALTY AUDIT REPORT

I. INTRODUCTION

On May 28, 1965, an audit was made of the production and royalty accounts and records of Hecla Mining Company, Box 320, Wallace, Idaho, pertaining to the value of concentrates applicable to mine production during the period April 10, 1964, through April 30, 1965, from property known as Mayflower Mine located in Wasatch County, Utah, on which royalty is payable to the U. S. Government under terms of Contract Idm-E1218, Docket DMEA-4981 (lead-zinc-copper), dated June 23, 1958, as amended, with

New Park Mining Company
907 Walker Bank Building
Salt Lake City, Utah

Exploration, development, and mining operations were conducted by the Operator (New Park Mining Company) through November 1961. Subsequent operations have been by Hecla Mining Company under an operating agreement with the Operator.

This audit was based on an examination of the production and assay records at the mine office at Heber, Utah, which are maintained by and under the supervision of Mr. John G. Simos, senior geologist, Hecla Mining Company. T. M. Romslo, mining engineer, U.S.B.M., Denver, Colorado, accompanied this auditor and rendered valuable assistance in the conduct of the audit.

II. GENERAL INFORMATION

Article 8 and Annex II of the contract provide that if the Government makes a certification of discovery or development the Operator, as principal if the producer or as surety if not the producer, shall pay to the Government a royalty on all minerals mined or produced from the land described in Article 2 and Annex I of the contract within a period of 15 years from the date of the contract, or until the total net amount contributed by the Government to the exploration costs without interest is fully repaid, whichever occurs first.

Annex II also provides for the payment by the Operator of royalty on any production, regardless of where it comes from, that is transported through any new workings to the cost of which the Government contributed, or any portion of said workings. Annex II further provides for the payment of a 5 percent royalty on the total transportation charges received by the Operator on any production from outside the boundaries of the land described in Article 2 of the contract transported through such workings, in the event that

neither the Operator nor any subsidiary or affiliate thereof has any interest in such production.

A certification of discovery or development was issued by the Government on April 5, 1962.

A Report of Review in lieu of final cost audit dated May 17, 1962, found acceptable costs under the exploration contract to be $266,044.06 with the Government's contribution, on a 50 percent basis, being $133,022.03.

The land under the contract consists of all or portions of 23 patented and 3 unpatented claims located in sec. 34, T. 2 S., R. 4 E., Salt Lake Meridian, Blue Ledge Mining District. Excluded, however, is the area of the claims above the 1380 level and east of a vertical plane at approximately 2,120 feet, S. 65 degrees W. of the Mayflower shaft. At the time the contract was executed the Operator owned part of the land and leased the remainder from the United States Smelting, Refining and Mining Company, which company executed a Consent to Lien and Subordination Agreement on June 13, 1958.

III. SCOPE OF AUDIT AND FINDINGS

Prior to the on-site audit a statement of royalty received during the period covered by this audit was prepared from copies of monthly statements received by the OME office in support of remittances by Hecla Mining Company during the period covered by this audit. All of the data included in the statement were confirmed by detailed recomputation. This statement, which is filed as part of my audit work papers, was reconciled with the production records in the mine office during the on-site audit.

In my opinion Mayflower Mine maintains adequate, reliable and precise production records based on tonnage and assays of crude ore recovered from the various stopes, raises, etc. The assays are adjusted monthly based on milling results and the value per ton of crude ore from each area is determined based on current receipts from sales of concentrate and applied to compute the value of ore taken from a stope, raise, etc. This is done throughout their operation and is their standard practice.

The mill records reflect such things as tons of concentrates produced, recovery factors, etc. However, the extra time and work required to convert per ton of ore values into per ton of concentrate values was not deemed justifiable for OME purposes only.

Mr. Romslo made an underground inspection of the mine in the company of Mr. George L. Wilhelm, general superintendent. The mine maps were inspected by those gentlemen and this auditor for the purpose of determining whether the production from all areas subordinated under the contract were being included in the production on which royalty was being paid to the Government. This investigation indicated that all production from subordinated areas has been assigned to the production on which royalty was paid.

It was determined that there has not been any production by the Operator or by others from outside of the subordinated area and transported through "new workings" to the cost of which the Government contributed on which royalty would be payable to the Government. Also, it was determined there had been no production above the 1880 level and east of a vertical plane at approximately 2,120 feet, S. 65 degrees W. of the Mayflower shaft, although Mr. Wilhelm stated there was a possibility of such production on the 1500 level at some future date and that royalty would be paid on such production, when and if, it should materialize.

It was noted that in computing and paying royalty for February, March, and April 1965, certain computations relating to development ore were made at rates of royalty of less than 5 percent resulting in underpayments to the Government aggregating $309.05 determined as follows:

Month	Production Area	Tons of Ore	Net Smelter Value Per ton ore	Net Smelter Value Total	Royalty Rate	Royalty Amount
Feb. 1965	20-917 Dr.	345	$ 8.78	$ 3,028.76	2%	$ 60.58
Mar. "	20-880 Rse.	599	8.58	5,136.43	2%	102.73
Apr. "	20-880 Rse.	427	3.84	1,638.53	1½%	24.58
" "	20-917 Rse.	63	10.70	673.85	4%	26.95
Total smelter value and royalty paid				$10,477.87		$214.84
Royalty due - Concentrate basis						523.89
Underpayment of royalty						$309.05

As set forth in my royalty audit report dated May 1, 1963, the Government's royalty should be computed on the basis of sales of concentrates rather than sales of ore and would warrant the application of the 5 percent rate as the value of the concentrates is well in excess of $11.50 per ton.

IV. CONCLUSION

A summary analysis of production, value thereof, and royalty payable and paid under the provisions of this exploration contract follows:

Period	Ore Tons	Value of Production	Royalty Payable
New Park Mining Company			
June 23, 1958, thru Nov. 30, 1961	20,779	$418,630.16	$20,[illegible].97
Hecla Mining Company			
Dec. 1, 1961, thru Mar. 31, 1964	19,583	519,612.95	25,903.38
Totals - Prior audit	40,362	$938,303.11	$46,784.35
Apr. 1, thru Apr. 30, 1965	13,448	357,066.21	17,853.31
Totals	53,810	$1,295,369.32	$64,637.66
Royalty paid			64,328.61
Balance of Royalty Due			$ 309.05

This audit has determined that as of May 28, 1965, all production through April 30, 1965, on which the Government is entitled to royalty has been accounted for and proper royalty has been paid except as noted above.

C. E. Fisher

C. E. Fisher, CME Auditor

May 29, 1965

OFFICE OF MINERALS EXPLORATION
CONTRACT ADMINISTRATION AND AUDIT DIVISION

ROYALTY AUDIT CERTIFICATE

I have examined the production and royalty accounts and records pertaining to the value of concentrates produced for the period April 6, 1963, through April 9, 1964, by Hecla Mining Company, Box 320, Wallace, Idaho, from ore mined from Mayflower Mine located in Wasatch County, Utah, on which royalty is payable to the U. S. Government under terms of Contract Idm-E1218, Docket DMEA-4981 (lead-zinc-copper), dated June 23, 1958, as amended, with

New Park Mining Company
907 Walker Bank Building
Salt Lake City, Utah

My examination was made in accordance with generally accepted standards applicable in the circumstances.

This audit established the total value of concentrates during this period subject to Government royalty to be $449,869.99. Royalty payable to the Government at the rates specified in the contract is $22,493.52.

A prior royalty audit report dated May 1, 1963, found the value of ore and concentrates subject to royalty reported through April 5, 1963, to be $488,433.12 which added to the sales for the subsequent period make a total of $938,303.11. The royalty account as of April 5, 1963, was:

Total Royalty Payable	$24,290.83
Total Royalty Paid	24,145.93
Balance of Royalty Due	$ 144.90

As of April 9, 1964, the royalty account of this project was found to be:

Total Royalty Payable	$46,784.35
Total Royalty Paid	46,784.35
Balance of Royalty Due	$ -0-

C. E. Fisher, OME Auditor

April 29, 1964

OFFICE OF MINERALS EXPLORATION
CONTRACT ADMINISTRATION AND AUDIT DIVISION

ROYALTY AUDIT REPORT

I. INTRODUCTION

On April 9, 1964, an audit was made of the production and royalty accounts and records of Hecla Mining Company, Box 320, Wallace, Idaho, pertaining to the value of concentrates produced during the period April 6, 1963, through April 9, 1964, from property known as Mayflower Mine located in Wasatch County, Utah, on which royalty is payable to the U. S. Government under terms of Contract Idm-E1218, Docket DMEA-4981 (lead-zinc-copper), dated June 23, 1958, as amended, with

New Park Mining Company
907 Walker Bank Building
Salt Lake City, Utah

Exploration, development, and mining operations were conducted by the Operator (New Park Mining Company) through November 1961. Subsequent operations have been by Hecla Mining Company under an operating agreement with the Operator.

This audit was based on an examination of the production and assay records maintained at the mine office at Heber, Utah, which were made available for my inspection by John G. Simos, senior geologist, and Harry C. McMillan, office manager, Hecla Mining Company.

II. GENERAL INFORMATION

Article 8 and Annex II of the contract provide that if the Government makes a certification of discovery or development the Operator, as principal if the producer or as surety if not the producer, shall pay to the Government a royalty on all minerals mined or produced from the land described in Article 2 and Annex I of the contract within a period of 15 years from the date of the contract, or until the total net amount contributed by the Government to the exploration costs without interest is fully repaid, whichever occurs first.

Annex II also provides for the payment by the Operator of royalty on any production, regardless of where it comes from, that is transported through any new workings to the cost of which the Government contributed, or any portion of said workings. Annex II further provides for the payment of a 5 percent royalty on the total transportation charges received by the Operator on any production from outside the boundaries of the land described in Article 2 of the contract transported through such workings, in the event that

neither Operator nor any subsidiary or affiliate thereof has any interest in such production.

A certification of discovery or development was issued by the Government on April 5, 1962.

A Report of Review in lieu of final cost audit dated May 17, 1962, found acceptable costs under the exploration contract to be $266,044.06 with the Government's contribution, on a 50 percent basis, being $133,022.03.

The land under the contract consists of all or portions of 23 patented and 3 unpatented claims located in sec. 34, T. 2 S., R. 4 E., Salt Lake Meridian, Blue Ledge Mining District. Excluded, however, is the area of the claims above the 1880 level and east of a vertical plane at approximately 2,120 feet, S. 65 degrees W. of the Mayflower shaft. At the time the contract was executed the Operator owned part of the land and leased the remainder from the United States Smelting, Refining and Mining Company, which company executed a Consent to Lien and Subordination Agreement on June 13, 1958.

At the time of my prior royalty audit, covered by report dated May 1, 1963, royalty had not been paid on value of concentrates produced from certain ore mined on the 2000 level pending the determination of the boundary between the land under the contract and other land. On July 26, 1963, H. J. Vander Veer and Associates, Consulting Engineers and Geologists, 701 Judge Building, Salt Lake City, Utah, furnished a report on their investigation and survey of the 2000 level to Hecla Mining Company.

An adjustment of the royalty account retroactive to November 1962 was made and royalty was paid in October 1963 on previously unreported production from the land determined to be under the contract. Royalty is being paid currently on all production within the boundaries established by the survey. Also, the amount of $144.90 reported in my previous audit as additional royalty due because of payments made on basis of per ton value of ore rather than on per ton value of concentrates was received by the Government during May 1963.

During the period covered by this audit no production which would be subject to Government royalty was made from beyond the boundaries of the land described in Article 2 of the contract and transported through new workings to the cost of which the Government contributed.

III. SCOPE OF AUDIT AND FINDINGS

A statement of royalty received during the period covered by this audit was prepared from copies of monthly statements received by the OME office in support of remittances by Hecla Mining Company during the period covered by this audit. All of the data included in the statement were confirmed by detailed recomputation. This statement, which is filed as part of my audit work papers, was reconciled with the production records in the mine office during the on-site audit.

Mayflower Mine keeps its production records based on tonnage and assays of crude ore recovered from the various stopes, raises, etc. The assays are adjusted monthly based on milling results and the value per ton of crude ore from each area is determined and applied to compute the value of ore taken from a stope, raise, etc. This is done throughout their operation and is their standard practice.

The mill records reflect such things as tons of concentrates produced, recovery factors, etc. However, the extra time and work required to convert per ton of ore values into per ton of concentrate values was not deemed justifiable for OME purposes only.

IV. CONCLUSION

A summary analysis of production, value thereof, and royalty payable and paid under the provisions of this exploration contract follows:

Period	Ore Tons	Value of Production	Royalty Payable
New Park Mining Company			
June 23, 1958, thru Nov. 30, 1961	20,779	$418,690.16	$20,880.97
Hecla Mining Company			
Dec. 1, 1961, thru Feb. 28, 1963	3,887	69,742.96	3,409.86
Totals - Prior audit	24,666	$488,433.12	$24,290.83
Mar. 1, 1963, thru Mar. 31, 1964	15,696	449,869.99	22,493.52
Totals	40,362	$938,303.11	$46,784.35

This audit has determined that as of April 9, 1964, all production through March 31, 1964, on which the Government is entitled to royalty has been accounted for and proper royalty has been paid. Royalty on the value of March 1964 production was remitted by the Operator to the OME Region III office on April 13, 1964, after the date of the audit but prior to the date of this report.

C. E. Fisher, OME Auditor

April 29, 1964

OFFICE OF MINERALS EXPLORATION
CONTRACT ADMINISTRATION AND AUDIT DIVISION

ROYALTY AUDIT CERTIFICATE

I have examined the production, sales, and royalty accounts and records pertaining to the sales of ore and concentrates for the period March 1, 1962, through April 5, 1963, by Hecla Mining Company, Box 320, Wallace, Idaho, from the Mayflower Mine located in Wasatch County, Utah, on which royalty is payable to the U. S. Government under terms of Contract Idm-E1218, Docket DMEA-4981 (lead-zinc-copper), dated June 23, 1958, as amended, with

New Park Mining Company
907 Walker Bank Building
Salt Lake City, Utah

My examination was made in accordance with generally accepted standards applicable in the circumstances.

This audit established the total value of ores and concentrates during this period subject to Government royalty to be $48,117.41. Royalty payable to the Government at the rates specified in the contract is $2,328.58.

A prior royalty audit report dated June 1, 1962, found the value of ore subject to royalty through February 28, 1962, to be $440,315.71 which added to the sales for the subsequent period make a total of $488,433.12. The royalty account as of February 28, 1962, was:

Total Royalty Payable	$21,962.25
Total Royalty Paid	21,962.25
Balance of Royalty Due	$ -0-

As of April 5, 1963, the royalty account of this project was found to be:

Total Royalty Payable	$24,290.83
Total Royalty Paid	24,145.93
Balance of Royalty Due	$ 144.90

C. E. Fisher

C. E. Fisher, OME Auditor

MAY 1 1963

OFFICE OF MINERALS EXPLORATION
CONTRACT ADMINISTRATION AND AUDIT DIVISION

ROYALTY AUDIT REPORT

I. INTRODUCTION

On April 11 and 19, 1963, an audit was made of the production, sales, and royalty accounts and records of Hecla Mining Company, Box 320, Wallace, Idaho, pertaining to the value of crude ore and concentrates sold during the period March 1, 1962, through April 5, 1963, from property known as Mayflower Mine located in Wasatch County, Utah, on which royalty is payable to the U. S. Government under terms of Contract Idm-E1218, Docket DMEA-4981 (lead-zinc-copper), dated June 23, 1958, as amended, with

New Park Mining Company
907 Walker Bank Building
Salt Lake City, Utah

Exploration, development, and mining operations were conducted by New Park Mining Company (hereinafter referred to as the Operator) through November 1961. Subsequent operations have been by Hecla Mining Company under an operating agreement with the Operator.

This audit was based on an examination of the production and assay records maintained at the mine office at Heber, Utah, which were made available on April 11 by George Wilhelm, plant superintendent, Hecla Mining Company, and the records in the main office at Wallace, Idaho, which were made available on April 19 by J. R. Mathews, secretary treasurer.

II. GENERAL INFORMATION

Article 8 and Annex II of the contract provide that if the Government makes a certification of discovery or development the Operator, as principal if the producer or as surety if not the producer, shall pay to the Government a royalty on all minerals mined or produced from the land described in Article 2 and Annex I of the contract within a period of 15 years from the date of the contract, or until the total net amount contributed by the Government to the exploration costs without interest is fully repaid, whichever occurs first.

Annex II also provides for the payment by the Operator of royalty on any production, regardless of where it comes from, that is transported through any new workings to the cost of which the Government contributed, or any portion of said workings. Annex II further provides for the payment of a 5 percent royalty on the total transportation charges received by the Operator on any production from outside the boundaries of the land described in Article 2 of the

contract transported through such workings, in the event that neither Operator nor any subsidiary or affiliate thereof has any interest in such production.

A certification of discovery or development was issued by the Government on April 5, 1962.

A Report of Review in lieu of final cost audit dated May 17, 1962, found acceptable costs under the exploration contract to be $266,044.06 with the Government's contribution, on a 50 percent basis, being $133,022.03.

The land under the contract consists of all or portions of 23 patented and 3 unpatented claims located in sec. 34, T. 2 S., R. 4 E., Salt Lake Meridian, Blue Ledge Mining District. Excluded, however, is the area of the claims above the 1880 level and east of a vertical plane at approximately 2,120 feet, S. 65 degrees W. of the Mayflower shaft. At the time the contract was executed the Operator owned part of the land and leased the remainder from the United States Smelting, Refining and Mining Company, which company executed a Consent to Lien and Subordination Agreement on June 13, 1958.

On all production through November 1961 the Operator made monthly payments of royalty based on the value of ore obtained from the exploration drifts and raises and from production beyond the boundaries of the land described in Article 2 of the contract in the manner set forth in my audit report dated June 9, 1961. This practice was continued by Hecla Mining Company on production through March 1962 with a slight modification in the method of computing the amount of royalty payable as explained in my audit report dated June 1, 1962.

Commencing with April 1962 production Hecla Mining Company stockpiled the ore pending completion of a flotation mill at the minesite. The mill was placed in operation on November 20, 1962, and since that date has been concentrating the ore from the stockpile and from mine production. Lead concentrates are sold to American Smelting and Refining Company, East Helena, Montana, and zinc concentrates are sold to The Bunker Hill Company, Kellogg, Idaho.

III. SCOPE OF AUDIT AND FINDINGS

A statement of royalty received during the period covered by this audit was prepared from copies of monthly statements received by

the OMM Washington, D. C., office in support of remittances by Hecla Mining Company during the period covered by this audit. All of the data included in the statement were confirmed by detailed recomputation. This statement, which is filed as part of my audit work papers, was reconciled with the production and sales records in the mine office during the on-site audit.

The royalty settlement for March 1962 production was computed and proper royalty was paid based on the sale of ore in the same manner as prior royalty payments were computed and paid. Thereafter, Hecla Mining Company has sold lead and zinc concentrates rather than crude ore. In the company's calculation of returns from mining operations the total net smelter returns for the production period, April through November 1962 with respect to ore stockpiled prior to placing the mill in operation, and on a monthly basis thereafter, have been allocated to the various areas from which the ore was obtained. This allocation gives effect to the mineral content of the ore as determined by sampling and assaying as is more fully explained in my royalty audit report dated June 1, 1962.

Article 8 of the exploration contract provides that the Government's royalty shall be a percentage of the gross proceeds from the production sold, <u>in the form sold</u> (ore, concentrates, metal, or equivalent). Accordingly, such royalty properly is based on the <u>tonnage of concentrates</u> sold and the proceeds from the sale of the concentrates since milling operations have been conducted at the Mayflower Mine. The Operator, however, has based its computations on the <u>tonnage of ore</u>.

The <u>ore</u> produced from the area subject to Government royalty and stockpiled prior to opening of the mill was determined to have had a value in excess of $11.50 per ton and the maximum royalty rate of 5 percent was used in computing the Government's royalty. However, the value per <u>ton of ore</u> produced during the months immediately thereafter was less than $11.50 per ton and royalty was paid at less than the 5 percent rate. The concentration ratio at the Mayflower mill is 4 or 5 tons of ore to produce a ton of concentrates which would indicate a value per <u>ton of concentrates</u> far in excess of $11.50 per ton and the 5 percent royalty rate would be applicable.

The improper computation method used has resulted in the underpayment of royalty in the amount of $144.90, computed as follows:

Period	Tons of ore	Net smelter value Per ton ore	Net smelter value Total	Royalty Rate	Royalty Amount
Nov. 21 thru Dec. '62	204	$7.58	$1,546.55	1½%	$ 23.20
January 1963	460	9.87	4,538.69	3%	136.16
Total smelter value and royalty paid			$6,085.24		$159.36
Royalty due - Concentrate basis				5%	304.26
Underpayment of royalty					$144.90

IV. CONCLUSION

A summary analysis of reported production, sales, and royalty payable and paid during the period covered by this audit and the totals since the date of the contract is attached hereto as Exhibit "A".

In addition to the balance of $144.90 found to be due as a result of computing the royalty payments on a basis of the per ton value of ore rather than on a basis of the per ton value of concentrates, it was ascertained that certain production, identified as being from the 20-P-905W and 20-P-905E stopes, has not been reported pending a determination as to the exact boundary between the land under the contract and other land. However, records are being maintained pertaining to such production.

Mr. Wilhelm assured this auditor that the boundary line should be established within a few weeks and the applicable portion of the production would then be reported and royalty paid under provisions of the contract. I was further advised that such ore is not moved through "new workings", to the cost of which the Government contributed, and no royalty will be paid on production from beyond the boundary when it is established.

Except as indicated above the audit has established that all of the sales of production settled during the period covered by the audit has been reported and royalty paid thereon.

C. E. Fisher

C. E. Fisher, ~~GMK~~ Auditor

MAY 1 1963

Exhibit "A"

Operator and Production Period	This Period Ore Tons	This Period Proceeds	This Period Royalty Payable	Since June 23, 1958 Ore Tons	Since June 23, 1958 Proceeds	Since June 23, 1958 Royalty Payable
New Park Mining Co.						
To Nov. 30, 1961				20,779	$418,690.16	$20,880.97
Hecla Mining Co.						
Dec. 1961 through Feb. 1962				1,362	21,625.55	1,081.28
Totals - Prior audit				22,141	$440,315.71	$21,962.25
Hecla Mining Co.						
March 1962	403	$ 3,864.90	$ 115.95	403	3,864.90	115.95
April to Nov. 20, 1962	1,138	32,159.97	1,608.00)			
Nov. 21 through Dec. 1962	204	1,546.55	77.33)	2,122	44,252.51	2,212.63
January 1963	460	4,538.69	226.93)			
February 1963	320	6,007.30	300.37)			
Totals	2,525	$48,117.41	$2,328.58	24,666	$488,433.12	$24,290.83
Royalty paid			2,183.68			24,145.93
Balance of royalty due			$ 144.90			$ 144.90

Mr. Thurwell

DMEA-4981

OFFICE OF MINERALS EXPLORATION
CONTRACT ADMINISTRATION AND AUDIT DIVISION

ROYALTY AUDIT CERTIFICATE

I have examined the production, sales, and royalty accounts and records pertaining to production of ore for the period June 23, 1958, through April 30, 1961, of

New Park Mining Company
907 Walker Bank Building
Salt Lake City 11, Utah

from the Mayflower Mine located in Wasatch County, Utah, on which royalty is payable to the U. S. Government under terms of Contract Idm-21218, DMEA 4981 (lead, zinc, copper), dated June 23, 1958, as amended.

My examination was made in accordance with generally accepted standards applicable in the circumstances.

The audit established the total value of ores produced during this period, subject to DMEA royalty, to be $182,049.59. Royalty payable to the Government at the rates specified in the contract is $9,098.95. The royalty paid and balance due are as follows:

Total Royalty Due	$9,098.95
Total Royalty Paid	9,098.95
Balance of Royalty Due	$ -0-

C. E. Fisher

C. E. Fisher, OME Auditor

June 9, 1961

OFFICE OF MINERALS EXPLORATION
CONTRACT ADMINISTRATION AND AUDIT DIVISION

ROYALTY AUDIT REPORT

I. INTRODUCTION

On May 25, 1961, an audit was made of the production, sales, and royalty accounts and records of

New Park Mining Company
907 Walker Bank Building
Salt Lake City 11, Utah

pertaining to the value of crude ore produced during the period June 25, 1958, through April 30, 1961, from property known as Mayflower Mine located in Wasatch County, Utah, on which royalty is payable to the U. S. Government under the terms of Contract Idm-E1218, DMEA-4981 (lead, zinc, copper), dated June 25, 1958.

This audit was based on an examination of the production and assay records maintained by James V. Muth, mine geologist, under the supervision of Bob Archer, chief geologist and engineer. The records were made available for audit by Mr. Archer in the company's office at the mine site. Monthly payments of royalty are made by checks drawn at the company's Keetley, Utah, office based on statements furnished by Messrs. Muth and Archer. The records at the Keetley office were reviewed to the extent deemed necessary. T. M. Romslo, mining engineer, USBM, was available as needed. The cooperation and assistance of Messrs. Archer and Romslo greatly facilitated the audit.

II. GENERAL INFORMATION

Article 8 and Annex II of the contract provide that the Operator shall pay to the Government a royalty on all minerals mined or produced from the land described in Article 2 of the contract from the date of the contract until the lapse of time in which the Government may make a certification of discovery or development (6 months after receipt of a sufficient final report and final account of the exploration) or until the total net amount contributed by the Government to the exploration costs shall have been repaid, whichever occurs first. In the event the Government shall certify a discovery or development the repayment period shall be 15 years from the date of the contract.

Annex II further provides for the payment by the Operator of royalty on any production, regardless of where it comes from, that is transported through any new workings to the cost of which the Government

has contributed, and for the payment of a 5 percent royalty on the total transportation charges received by the Operator on any production from outside the boundaries of the land described in Article 2 of the contract transported through the workings described above.

The exploration work provided by the contract has not been completed and certification of discovery or development has not been issued. As of the date of this audit the Government has contributed an aggregate of $124,692.49, which is 50% of the accepted costs claimed by the Operator for work performed through February 1961.

The Operator has been obtaining ore from exploration drifts and raises advanced under the exploration contract since May 1960. Such ore has been commingled with other production by the Operator and sold to United States Smelting, Refining and Mining Company. There was no transportation of other production by the Operator through the new workings; nor was there any production from beyond the boundaries of the land described in Article 2 of the contract prior to April 1961. During April ore encountered on the Pearl fissure in 2002 E drift east of the DMEA boundary was transported through the workings completed under the exploration contract. Royalty was paid on the value of such ore in the April 1961 settlement.

The value of ore on which royalty is determined to be payable to the Government and the amount of such royalty is computed in the following manner:

1. Assays are made from cut samples of ore taken from the various working faces. The per ton value of the contained minerals is computed based on the assay results, averaged over the month, and the latest selling prices. Tonnage recovered is computed on the basis of measurements of the cubical areas from which the ore is removed and the specific gravity of the ore. Total value of the ore is computed by multiplying the tonnage by the per ton value indicated by the assays.

2. Assays are made from grab samples of ore taken from each car of ore removed from the mine. The per ton value of the contained minerals from each area of the mine is computed based on the assay results, averaged over the month, and the latest selling prices. Tonnage recovered from the various areas is computed on the basis of car counts. Total value

of the ore is computed by multiplying the tonnage recovered from each area by the per ton value indicated by the assays.

3. The results obtained as outlined in paragraphs 1 and 2 above are averaged for each working area in the mine. These average results for all areas subject to Government royalty are then totaled for the month and royalty is paid on the total indicated value of production from the subordinated area.

This method of computing the value of production is integrated into the company's cost accounting system. The information thus obtained is used in connection with planning mining operations, settlements with land-owners, and with the lessees performing mining and development, as well as exploration operations of the property. In a letter dated June 24, 1959, Clark L. Wilson, vice president of the company, suggested that the system then in effect become the basis for determining the value of production subject to Government royalty. This proposal was accepted by the Executive Officer, OME Field Team, Region III, in a letter dated June 26, 1959.

III. SCOPE OF AUDIT AND FINDINGS

A. Conference with Examining Engineer

A conference with T. M. Romslo, mining engineer, USBM, who is thoroughly familiar with this project, disclosed the following:

(1) The Operator does not stockpile ore subject to royalty repayment.
(2) Production subject to DMEA royalty is commingled with exempt production. Mr. Romslo and this auditor are in agreement that the allocation of commingled production as outlined above is equitable to the Government.
(3) The Operator does not stockpile mine or mill rejects that may have potential value within the royalty repayment period.
(4) The assay controls in effect are deemed adequate.
(5) The manner of disposing of production gives the Government fair royalty returns.
(6) Periodic examinations of operations indicate the Operator is properly reporting its production of ores subject to DMEA royalty.
(7) The Operator does not buy from or sell to other operators.

(8) Operations of the property are continuing.

B. Audit of Settlement Statements

A considerable amount of preaudit work was accomplished in the OME Washington, D. C., office prior to the field audit. During this preaudit work a statement of royalty received was prepared from copies of monthly statements showing royalty computations furnished by the Operator in support of royalty payments. The royalty receipts were verified with deposits made by the Department's Fiscal Section. All of the data included in the statement were confirmed by detailed recomputation. This statement, which is filed as a part of my audit work papers, was reconciled with the production and sales records in the company's office during the on-site audit.

IV. CONCLUSION

A summary analysis of the Operator's production from exploration drifts and raises, and on ore transported through such workings, value thereof, and royalty due and paid follows:

Month	Tons	Value Per Ton	Value Total	Royalty Due Rate	Royalty Due Amount
May 1960	238	$ 9.00	$ 2,142.00	2½%	$ 53.55
June 1960 thru April 1961	9,173	*	180,907.59	5%	9,045.40
Totals	9,411	Av. $19.34	$182,049.59	Av. 4.998%	$9,098.95
Royalty paid					9,098.95
Balance of royalty due					$ -0-

* Various. Monthly average values in excess of $11.50 per ton in each instance.

The audit has confirmed the accuracy and propriety of the royalty payments received applicable to production during the period June 25, 1958, through April 30, 1961. It has also determined that all indicated production of ores during that period have been properly accounted for.

Royalty payable of $1,348.16 on April 1961 production was paid subsequent to the date of this audit and was credited to the Operator's account by the Department's Fiscal Section during the month of June 1961.

June 9, 1961

C. E. Fisher

C. E. Fisher, OME Auditor

MME Form 22
Dec. 60

DEPARTMENT OF THE INTERIOR
Office of Minerals Exploration

CHECK SHEET OF EXAMINING ENGINEER

Operator's Name and Address

New Park Mining Company

Mayflower Mine (Lead-Zinc-Copper)

Wasatch County, Utah

Contract No.	Docket No.
Idm-E1218	DMEA-4931

Prepared by (Signature)	Date
T. M. Romslo	May 29, 1961

Yes	No		
	X	1. (a)	Does the Operator stockpile ore subject to royalty repayment?
		(b)	If so, is segregation and identification procedure adequate?
X		2. (a)	Does the Operator commingle production subject to DMEA or OME royalties with exempt production?
X		(b)	If so, is the allocation of the commingled production equitable?
	X	3. (a)	Does the Operator stockpile mine or mill rejects (low grade ore, tailing, middlings, etc.) that may have potential value within the royalty payment period?
		(b)	If so, are adequate records maintained on such material to protect the Government's interest?
X		4.	Are the assay controls in effect adequate?
X		5.	Does the manner of disposing of production give the Government its fair royalty returns?
X		6.	Do your periodic examinations of operations indicate the Operator is properly reporting his production of ores subject to DMEA or OME royalties?
	X	7.	Does the Operator buy from or sell to other Operators?

8. Current status of property. (Check one).

- [X] Operating.
- [ ] Inactive.
- [ ] Abandoned.

Date of last production if not operating.

Comment on items 1(b), 2(b), 3(b), and 4 to 6, if answer is No:

84861-60

Docket copy

CERTIFICATION BY THE UNITED STATES OF AMERICA OF A DISCOVERY OR DEVELOPMENT UNDER AN EXPLORATION PROJECT CONTRACT

To: New Park Mining Company
904 Walker Bank Building
Salt Lake City 11, Utah

Pursuant to the provisions of Exploration Project Contract No. Idm-E1218, dated June 23, 1958, (Docket No. DMEA-4981), hereinafter called the "contract," between the New Park Mining Company, a Nevada corporation, and the United States of America, hereinafter called the "Government"; to establish and fix the Government's percentage royalty on production and its lien therefor and on the land described in the contract, the Government considers and therefore certifies that discovery or development from which production may be made has resulted from the exploration work.

The nature of said discovery or development is described broadly or indicated as follows:

Work of drifting, crosscutting, raising, diamond drilling, and long-hole drilling on the 2005 level of the Mayflower mine has shown the existence of lead-zinc-silver-gold ores occurring in the Mayflower and Pearl fissure zones, both in the diorite and in the limestones and dolomites of the Deseret formation. Such ores occur as veins and also as replacement pods and lenses.

THE UNITED STATES OF AMERICA

By George Fumich, Jr. (pt)
Director, Office of Minerals Exploration

Dated: April 5, 1962

WRGriswold/gla 3-20-62
cc to: Director's Reading File
Mr. Johnson
Review Committee
United States Smelting Refining and Mining Company
Contract Division
Fiscal Section
Region III (2)
Docket
Mr. Harold Kirkemo, USGS

Dwowel
Dolley
Brown
Talbert
Selfin
John
Fu

MME FORM 6 REFERENCE SLIP

REV. 2-59 OFFICE OF MINERALS EXPLORATION

TO:	DATE	INITIALS
1. Mr. Fumich	5-8	BLM
2. Mr. Johnson	5/18	JEJ
3. ~~Mr. Selfridge~~		
4. Mr. Griswold		
5.		
FROM: E. D. Talbert	5/18	

FOR: Check items for action desired

____ Action ____ Reply for signature of _____

____ Approval ____ Investigate ____ Surname

____ Comment ____ Recommendations ____ Signature

____ Conference ____ Rewrite ____ File

____ Instructions ____ Your information

REMARKS:

Amen! The last of DMEA costs! - Refund??

OFFICE OF MINERALS EXPLORATION
CONTRACT ADMINISTRATION AND AUDIT DIVISION

REPORT OF REVIEW

I have reviewed the Monthly Reports of:

New Park Mining Company
907 Walker Bank Building
Salt Lake City 11, Utah

pertaining to Exploration Project Contract Idm-E1218, DMEA No. 4981, including Amendments Nos. 1 through 7, for June 1958 to October 1961, inclusive, covering a lead, zinc, and copper project at the Mayflower Mine, Wasatch County, Utah.

My review included an examination of the Monthly Reports (Forms MF-104 and MME Forms 60) and supporting documents, comparison of the claimed costs with the contract and pertinent schedules, confirmation of work performed by reference to field reports and correspondence, and a determination of the reasonableness and propriety of the costs.

This review was made in lieu of a final audit of the Operator's accounts and records for the reasons given in the attached schedule.

The findings of this review are stated in the following summary and the attached schedule:

Total cost billed by Operator		$267,782.39
Exceptions:		
Prior to this review	$ -0-	
Herewith	1,738.33	1,738.33
Total acceptable cost		$266,044.06

The contract calls for a 50 percent contribution of the allowable costs by the Government. Therefore, if the project is otherwise accepted as having met the terms of the contract, payments as follows are valid and proper:

Payable on audited claim	$133,022.03
Paid to date	133,391.15
Balance due Government	$ 369.12

Dy Pd. Apr. 7/10/62 Abstract of Remittances

E. J. Talbert
E. J. Talbert, OME Auditor

May 17, 1962

Reasons for Report of Review in lieu of a final audit:

(a) a major portion ($183,008.50) of the acceptable costs was under a contract provision for contribution by the Government on the basis of fixed unit costs for work performed;

(b) a large portion ($73,844.26) of the acceptable actual costs was covered by Interim Audit Certificates and Reports dated June 3, 1959, and May 9, 1960; and

(c) the administrative cost to the Government of an additional audit would be excessive in relation to the estimated amount of possible further exceptions.

Exceptions by this review:

(a) The first 115 feet of timbered raising were claimed by the Operator on a basis of actual costs aggregating $5,310.33, whereas 115 feet at the fixed unit cost of $46.00/ft. provided by Amendment No. 7 amounts to only $5,290.00; difference disallowed ... $ 20.33

(b) 1,713 feet of diamond drilling were claimed by the Operator at $6.35/ft., the maximum allowable under the contract. The work was not performed by an independent contractor as specified by the contract, but was performed under the Mayflower Lease at $6.35/ft. less an aggregate of $3.35/ft. for equipment and materials supplied by the Operator; in effect, a labor contract at $3.00/ft.

The contractual allowable maximum of $6.35/ft. was based on a May 22, 1958, bid by Boyles Bros. Drilling Company of $4.75/ft. plus bonus for core recovery as follows:

70% - 80%	$ .60/ft.
80% - 90%	.90/ft.
90% - 95%	1.20/ft.
Over 95%	1.60/ft.

As the Operator has affirmed that an aggregate of only 1,220.11 feet of core, or 71.02%, were recovered from the 1,718 feet of drilling, the maximum allowable is $4.75/ft. plus $.60/ft., or $5.35/ft. Difference disallowed (1,718/ft. at $1.00/ft.) 1,718.00

Total Exceptions $1,738.33

[illegible]

Acceptable costs:

Category (1) Diamond Drilling, 1,718 ft. @ $5.55	$ 9,191.30
" (7) Water Disposal Facilities	41,036.71
Pumps & Pump Column Installation	32,807.55
Fixed Unit Costs:	
Installation of Water Door, 1 @ $980.00	980.00
Drifting and Crosscutting, 3,339 ft. @ $45.00	150,255.00
Timbering and Steel Sets, 953½ ft. @ $11.00	10,488.50
Timbered Raising, 272½ ft. @ $46.00	12,535.00
Longhole Drilling, 7,255½ ft. @ $1.00	7,255.50
Assay Determinations, 1,065 @ $1.00	1,065.00
Incidental Allowance, 1,718 ft. @ $.25	429.50
Total	$266,044.06

MME FORM 6 REFERENCE SLIP

REV. 2-59 OFFICE OF MINERALS EXPLORATION

TO:	DATE	INITIALS
1. Mr. Johnson	5/19	
2. ~~Mr. Selfridge~~		
3. Mr. Griswold		
4.		
5.		
FROM: E. D. Talbert	5/18	

FOR: Check items for action desired

____ Action	____ Reply for signature of ____	
____ Approval	____ Investigate	____ Surname
____ Comment	____ Recommendations	____ Signature
____ Conference	____ Rewrite	____ File
____ Instructions	Your information	

REMARKS:

(a) Pls. note 2nd par. on page 11 of report

(b) Also, consideration should be given to putting remaining work on a fixed unit cost basis eff. 4/1/60.

INT.-DUP. SEC., WASH., D.C. M56300-59

OFFICE OF MINERALS EXPLORATION
CONTRACT ADMINISTRATION AND AUDIT DIVISION

INTERIM AUDIT CERTIFICATE

I have examined the records and transactions of:

New Park Mining Company
907 Walker Bank Building
Salt Lake City, Utah

pertaining to Exploration Project Contract No. Idm-E1218, Docket No. DMEA-4981, dated June 23, 1958, including Amendments Nos. 1 through 6, covering a project of exploration for lead, zinc and copper located in Wasatch County, Utah, and referred to as Mayflower Mine, for the period June 23, 1958, to March 31, 1960, inclusive.

My examination was made in accordance with generally accepted standards applicable in the circumstances.

The audit disclosed the following facts in regard to the amount to be paid the Operator:

Total cost billed by Operator			$207,747.65
Exceptions (see Audit Report for details):			
Prior to this audit	$51,348.58		
Less: Reinstatement	.02	$51,343.56	
During this audit		-0-	51,348.56
Total Acceptable Cost			$156,399.09

The contract calls for a 50 percent contribution of the allowable costs by the Government. Therefore, if the project is otherwise accepted as having met the terms of the contract, payments as follows are valid and proper:

Payable on audited claim	$ 78,199.54
Paid to date	78,199.54
Balance due Operator	$ -0-

C. E. Fisher

C. E. Fisher, OME Auditor

May 9, 1960

[illegible]

[illegible]

[illegible]

INTERIM AUDIT REPORT

I. INTRODUCTION

On April 25, 26, and 27, 1960, an interim audit (covering operations for the period April 1, 1959, to March 31, 1960) was made of the records and transactions pertaining to Exploration Project Contract No. Idm-E1218, Docket No. DMEA-4981, dated June 23, 1958, including Amendments Nos. 1 through 6, with the

New Park Mining Company
907 Walker Bank Building
Salt Lake City, Utah

covering a project for the exploration of lead, zinc and copper on property known as the Mayflower Mine near Keetley, Wasatch County, Utah.

A prior interim audit by Donald T. Finch, OME Auditor, covered by his report dated June 3, 1959, pertained to the period June 23, 1958, to March 31, 1959. The present audit extends the period audited to March 31, 1960, and incorporates the results of the prior interim audit.

The original records under this contract are maintained under the supervision of Carl D. Harper, Auditor and Purchasing Agent, at Keetley, Utah, where this audit was conducted. Mr. Harper and his assistants, Harry McMillan and Francis Smith, as well as Gale A. Hansen, General Superintendent, were consulted as necessary during the audit. T. M. Romslo, Mining Engineer, USBM, was available as needed. The cooperation and assistance of all concerned greatly facilitated the audit.

II. GENERAL INFORMATION ON RECORDS

The general books of the company with all usual accounting supports are kept at Keetley, Utah, and were made freely available to this auditor. Such supports consisted of payrolls, time cards, invoices, insurance policies, etc.

Since 1957 operation of the Mayflower Mine, including the exploration work under this contract, has been conducted by a group of former employees under a lease arrangement referred to as Mayflower Lease. The New Park Mining Company continued the purchasing of all materials and supplies which are charged to the lessees as used. All labor, including a shift foreman, is furnished by the lessees. General supervision, engineering, and technical services are performed by company representatives.

[illegible]

[illegible]

[illegible]

[illegible]

[

Semi-monthly statements, signed by a representative of the company and by a representative of the lessees, showing units of work accomplished, time worked, rates of pay, and materials and supplies used in various phases of the work accomplished during the period, serve as the basic documents for settlements with the lessees. My audit was based primarily upon a review of these semi-monthly statements and included test-checks of supporting records to the extent deemed necessary to establish the propriety and validity of the information shown thereon.

The company records pertaining to this exploration project were found to be well maintained and were deemed to be accurate and reliable.

III. SCOPE OF AUDIT AND FINDINGS

The audit was limited to ascertaining the accuracy, propriety, and validity of the costs shown in the "Totals to Date" column of the Form MF-104, Operator's Monthly Report and Voucher, for the month of March 1960. By letter dated August 14, 1958, addressed to the Operator, the Executive Officer of the OME Field Team, Region III, waived the requirement for submission of supporting documents with the monthly MF-104; therefore, on-site audits of claimed costs are necessary.

The audit disclosed that the improper distributions of charges to "Items of Cost", as well as the adjustments for allowable costs not claimed, mentioned in the prior interim audit were adjusted during the period currently under review. The allocation of claimed costs to categories and items, as stated on the Form MF-104 for March 1960, were deemed to be acceptable for the purpose of this audit. No disallowances have been made, however, certain costs claimed by the Operator in excess of maximums allowable under the terms of the contract were suspended, in accordance with Article 13(c) of the contract, from Government participation pending determination of average unit costs of future drifting, crosscutting, and timbering.

(1) Independent Contracts

No items of cost applicable to this category of the contract's Exhibit "A" had been incurred at the time of this interim audit.

(2) Labor and Supervision

(a) Labor

Period	Accepted Costs	
June 23, 1958, to March 31, 1959	$27,527.08	
April 1, 1959, to March 31, 1960	45,291.32	$72,818.40

[illegible]-contract arrangements, acting as a representative of the company and as a [illegible] in the [illegible], attending [illegible] of work [illegible] [illegible], time [illegible] of pay and [illegible] and [illegible] and [illegible] of the work [illegible] [illegible] [illegible]

All charges to this sub-category represent compensation to the lessees for exploration work performed relating to this contract at the following rates:

Measured by work accomplished

Transite pipe and pump column installation	- $ 2.00	/foot	advanced
Drifting	- $11.80	"	"
Hoisting from drift	- $ 2.35	"	"
Haulage from drift	- $ 4.15	"	"
Timbering (including steel sets)	- $ 2.00	"	"
Raising	- $16.00	"	"
Hoisting and haulage from drift	- $ 3.60	"	"

Other

Day-pay rates of $16.00, $17.00, $18.00, or $21.00 per shift plus 50 percent for overtime. In addition, the lessees are paid 11½ percent of these day-pay rates to cover fringe benefits. (See Category (7) Miscellaneous - Fringe Benefits.)

(b) Supervision and technical services

Period	Accepted Costs		
	Lessees	Company	Total
June 23, 1958, to March 31, 1959	$1,800.00	$3,700.00	$ 5,500.00
April 1, 1959, to March 31, 1960	4,000.00	3,800.00	7,800.00
Totals	$5,800.00	$7,500.00	$13,300.00

This exploration contract allows a maximum charge of $650.00 per month for a period of 40 months, total maximum allowable cost of $26,000.00 for supervision and technical services. The estimated number of supervisors and technicians was waived in the contract terms.

Charges under this sub-category were made at the rate of $650.00 per month for the 20 months July 1958 through February 1959 and April 1959 through March 1960. During March 1959 only $300.00 was charged.

It has been the practice to allow the lessees amounts varying from $200.00 to $400.00 per month for supervision expense on semi-monthly statements. Such payments aggregated $5,800.00. The remainder of the charges ($7,500.00) was to cover supervision and technical services furnished by company employees.

The company has not kept a record of time of supervisory and technical employees devoted to the exploration project. The prior audit stated that the cost of supervisory and technical services by company employees during the period June 23, 1958, to March 31, 1959, aggregated $5,188.90. Mr. Hansen, the general superintendent, has estimated that the monthly cost to the company during the period April 1959 through March 1960 has been not less than $1,169.50 per month computed as follows:

Gale A. Hansen, Gen. Superintendent	1/3 of	total	time	- $	237.00
Bob Archer, Chief Engineer	3/4 of	"	"	-	412.50
Walter Bauer, Chief Geologist	1/4 of	"	"	-	150.00
Jim Muth, Mine Geologist	1/4 of	"	"	-	125.00
Phil Santy, Master Mechanic	1/5 of	"	"	-	115.00
Ted Booth, Chief Elect.	1/4 of	"	"	-	130.00
Total estimated professional services per month					$1,169.50

It is the opinion of the Acting Field Officer, OME Region III, that the charges made for supervision and technical services are reasonable and necessary. This auditor agrees.

(3) Operating Materials and Supplies

Operating materials and supplies used in the exploration work were charged to project costs on basis of the actual cost of the materials and supplies, less any trade or cash discounts allowed by vendors, plus applicable sales taxes, freight and delivery charges. Purchasing, handling, and other incidental costs were not included in these charges.

The quantities of material, prices, and total costs included in this category were found to be fully substantiated by copies of semi-monthly settlement statements with the lessees, material requisitions, and vendor's invoices. Test-checks were made by this auditor to the extent deemed necessary to establish the propriety and validity, as well as the mathematical correctness of the charges.

The amounts of accepted costs by sub-categories are as follows:

[illegible]

[illegible]

[illegible]	[illegible]
[illegible]	[illegible]
[illegible]	[illegible]

Sub-category	Period 6/23/58 to 3/31/59	Period 4/1/59 to 4/1/60	Total
(a) Timber	$ 1,226.72	$13,672.78	$14,899.50
(b) Explosives	755.02	8,086.62	8,841.64
(c) Pipe (50% basis)	12,434.26	3,111.31	15,545.57
(d) Track (50% basis)	209.55	977.31	1,186.86
(e) Pump column (50% basis)	8,154.44	-0-	8,154.44
(f) Supplies	3,895.71	9,989.67	13,885.38
(g) Power	2,296.45	24,759.50	27,055.95
Totals	$28,972.15	$60,597.19	$89,569.34

Timber includes 131 steel sets costing $7,858.58 used in drifts. The balance of the cost represents the cost of approximately 105,000 board feet of lumber of various dimensions.

Explosives consists of 8,812 sticks of CLX powder at $0.099 each, 66,543 sticks of ESX powder at $0.069 each, 11,310 electric caps, and incidental wire, primers, and fuses.

Pipe was charged to exploration costs at 50 percent of actual cost. The material used includes 7,149½ feet of transite pipe at $3.7935 per foot resulting in charges of $13,560.84 to project costs. Other charges include $263.09, representing 50 percent of the cost of couplings, float switches, etc., for the pump column and $1,721.64 for 50 percent of the cost of 6" water pipe and couplings and 2" air pipe and couplings installed in the drift and crosscuts.

Track. Charges under this sub-category represent 50 percent of the cost of 2,940 feet of 40 pound rail, together with ties, spikes, and bolts used.

Pump column. There were no costs incurred applicable to this sub-category during the period covered by this present interim audit. Detail of the charges is included in the prior interim audit report.

Supplies. The principal charges to this sub-category consist of $6,459.92 for cost of drill steel and bits used in drifting and crosscutting and $2,798.64 for gravel used in connection with installation of the transite pipe.

Power costs charged to the exploration project were determined by allocating the monthly power bill of Utah Power Company between exploration and other work on the basis of number of tons of rock removed from the exploration drift, crosscuts, and raise to total number of tons of rock and ore removed from the mine during the month.

Equipment	[illegible]	[illegible]	Total
(a) Lifts	[illegible]	[illegible]	[illegible]
(b) Conveyors	[illegible]	[illegible]	[illegible]
(c) Pumps ([illegible] units)	[illegible]	[illegible]	[illegible]
(d) Truck ([illegible] units)	[illegible]	[illegible]	[illegible]
(e) Jump drills ([illegible] units)	[illegible]		[illegible]
(f) Jump Hammer	[illegible]	[illegible]	[illegible]
(g) Other	[illegible]	[illegible]	[illegible]
Total	[illegible]	[illegible]	[illegible]

[illegible] (Table 13) total [illegible] [illegible] and [illegible] the [illegible] of the cost per ton of the [illegible] [illegible] [illegible] [illegible] of various dimensions.

Explosives consisted of [illegible] units of [illegible] [illegible] [illegible] units, [illegible] units of [illegible] [illegible] [illegible] [illegible]

(4) Operating Equipment

(a) Rental, and

(b) Purchase

These sub-categories are not applicable to this contract.

(c) Depreciation

Amendment No. 1 to the contract contains a schedule of authorized monthly depreciation rates applicable to each of the various items of the Operator's equipment when used in the exploration work. These monthly rates are maximum rates allowable. An additional proviso is that the depreciation allowance for any one month shall not exceed $1,590.00 and the total for the duration of the contract shall not exceed $47,700.00. There is no provision limiting the number of months depreciation may be claimed on any item of equipment. None of the maximums have been exceeded as of March 31, 1960.

The items of equipment, authorized monthly depreciation rates, and total depreciation charges at March 31, 1960, are as follows:

Item	Monthly Rates	Total Charges 3-31-60
Pumping		
Power cable	$ 67.50	$ 945.00
2-IR 550 HP pumps	291.67	-0-
2-450 HP submersible pumps	455.00	5,005.00
Drifting and Crosscutting		
1 Gantry-type jumbo	250.00	3,250.00
1 - 630 Eimco loader	168.33	2,356.62
1 - Train Car Loader	316.67	2,841.16
1 - Charging Panel	12.33	172.62
2 - 4 ton, 50 cell motor batteries	108.33	974.88
600 v. power cable	125.00	-0-
1 - 100 KVA transformer	30.00	420.00
5 - 25 HP fans	58.33	210.06
Drilling, Long hole		
2 long-hole machines	80.00	-0-
Total depreciation		$16,175.34

(b) [illegible]

(c) [illegible]

[illegible]

[illegible] applicable to this [illegible]

[illegible]

[illegible] the contract [illegible] [illegible] [illegible]

(5) Initial Rehabilitation and Repairs

(6) New Buildings, Improvements, etc.

These categories of cost are not applicable to this contract.

(7) Miscellaneous

(a) Repairs to equipment

Period	Accepted Costs	
June 23, 1958, to March 31, 1959	$ 392.50	
April 1, 1959, to March 31, 1960	5,378.11	$5,770.61

Charges to this sub-category cover cost of parts used in repairs to the items of company-owned equipment listed in category (4) (c) Depreciation. The charges were verified with invoices from vendors and were found to represent actual costs after appropriate reduction for cash and trade discounts and the addition of applicable freight and delivery charges.

(b) Accounting

Period	Accepted Costs	
June 23, 1958, to March 31, 1959	$2,150.00	
April 1, 1959, to March 31, 1960	3,000.00	$5,150.00

The Operator has claimed costs under this sub-category at the rate of $250.00 per month for the months July 1958 through September 1958 and November 1958 through March 1960. The claimed cost for October 1958 was $150.00.

Examination of the record of time of accounting employees devoted to the exploration project disclosed that the cost each month was in excess of the cost claimed on Forms MF-104 and aggregated $6,972.70 during the 21-month period involved.

(c) Fringe benefits

Period	Accepted Costs		
	Lessees	Operator	Total
June 23, 1958, to March 31, 1959	$2,253.71	$382.04	$2,635.75
April 1, 1959, to March 31, 1960	1,901.21	427.00	2,328.21
Totals	$4,154.92	$809.04	$4,963.96

(b) [illegible] rehabilitation and [illegible]

(i) [illegible], improvements, etc.

[illegible] expenditures [illegible] are supplements to [illegible].

(ii) [illegible]

(a) [illegible] equipment

Period	Approved Costs
[illegible] 1, 1969, to [illegible] 31, 1969	$ 192.30
April 1, 1969, to [illegible] 31, 1969	[illegible]

[illegible] is [illegible] cover cost of [illegible] to the [illegible] equipment listed in [illegible] (a) [illegible] [illegible]. The [illegible] were validated with [illegible] from [illegible] and were [illegible] to be reasonable actual costs after [illegible] to [illegible] for [illegible] electronic and the [illegible] of [illegible] to [illegible] and delivery [illegible].

(b) [illegible]

Period	Approved Costs
[illegible] 1, 1969, to March 31, 1969	[illegible]
[illegible] 1, 1969, to March 31, 1969	[illegible]

[illegible] are claimed [illegible] at the rate of [illegible] per month for the months July 1968 through September 1969 and November 1969 through March 1970. The claimed cost [illegible] October 1969 was [illegible].

[illegible] of the amount of [illegible] of secondary [illegible] described in the [illegible] directive [illegible] the cost [illegible] to [illegible] of the cost claimed on Form [illegible] and [illegible] [illegible] the [illegible] [illegible].

(c) [illegible] Supplies

Period	Approved Costs		
	Carried	Interest	Total
[illegible] 1, 1969, to March 31, 1969	[illegible]	[illegible]	[illegible]
April 1, 1969, to March 31, 1970	[illegible]	[illegible]	[illegible]
Total	[illegible]	[illegible]	[illegible]

Charges included in this sub-category represent amount paid to lessees based on 11.5 percent added to direct labor costs at days-pay rates and to that portion of the cost of supervision by company employees allocated to project costs. The 11.5 percent charge was not applied to payments to lessees for work done where the compensation was based on units of work completed.

This charge is in lieu of specific charges for FICA, State, and Federal unemployment taxes, workmen's compensation, and hospital and group life insurance. The rate is considered to be reasonable and is not in excess of actual costs of such fringe benefits for employees.

Other Observations

Exhibit "A" of this exploration contract, as amended, provides for the performance of designated items of work. As of March 31, 1960, no rock bolts had been used in drifts or crosscuts, only one of the two ventilation raises provided by the contract had been driven, the water doors had not been installed, and no longhole or diamond drilling had been performed.

The claimed and accepted costs of work performed through March 31, 1960, under the various items of work are as follows:

Item No. 1 Water disposal facilities

This work item covers the installation of 7,140 feet of sixteen inch transite pipe in the Mayflower 800 level. This work has been completed. A total of 7,149½ feet of pipe was installed. The number of feet stated in the work item was not designated as the maximum for Government participation, consequently there has been no disallowance of costs for the excess of 9½ feet.

The total claimed and accepted costs, as well as the cost per foot of pipe installation, applicable to this work item, as allocated to the various items of cost, are as follows:

Category & Item	Costs	
	Total	Per foot
Transite pipe	7,149½ ft.	
(2) Labor and Supervision:		
Labor	$15,393.50	$2.15
Supervision	3,850.00	.54

Category & Item	Costs Total	Per foot
(5) Operating Mat'ls. and Supplies:		
Timber	$ 1,107.25	$ .15
Pipe (50%)	13,560.84	1.90
Rail (50%)	41.58	.01
Supplies	3,007.52	.42
(7) Miscellaneous:		
Repairs to equipment	379.03	.06
Accounting	1,532.80	.21
Fringe benefits	2,164.19	.30
Total claimed and accepted costs	$41,036.71	$5.74

Item No. 2 Pumps and pump column installation

This auditor was informed that the work provided for under this item was completed during March 1960. The two 350 HP pumps on the 1630 level were not installed. The claimed and accepted costs applicable to this work item, as allocated to the various items of cost, are as follows:

Category & Item	Claimed and Accepted Costs
(2) Labor and Supervision:	
Labor	$17,742.66
Supervision	2,000.00
(3) Operating Mat'ls. and Supplies:	
Timber	259.68
Explosives	295.20
Pipe (50%)	263.09
Pump column (50%)	8,154.44
Supplies	1,595.35
(7) Miscellaneous:	
Accounting	1,082.20
Fringe benefits	1,414.93
Total	$32,807.55

Item No. 3 Drifting and crosscutting

A maximum total of 8,600 feet of drifting and crosscutting with necessary timbering and rockbolting was authorized under this work item. Through March 31, 1960, no rockbolting had been performed although 644½ feet of drifts and crosscuts had been timbered (steel sets used in part) in the 1,559 feet of drifting and crosscutting completed to that date.

[illegible]

[illegible]

(2) [illegible]

[illegible]	[illegible]	[illegible]
[illegible]	[illegible]	[illegible]
[illegible]	[illegible]	[illegible]

The costs claimed by the Operator were in excess of maximum average unit costs of $45.00 per foot for drifting and crosscutting and $11.00 per foot for timbering provided by the contract. Such excess costs have been suspended from Government participation by the OME Field Officer, Region III. This auditor concurs with these exceptions.

The total claimed, suspended, and accepted costs, as well as the cost per foot of work accomplished applicable to this work item allocated to the various items of cost, are as follows:

Category & Item	Costs Total	Costs Per foot
Drift and Crosscut	1,559 ft.	
(2) Labor and Supervision:		
Labor	$34,902.99	$22.39
Supervision	7,050.00	4.52
(3) Operating Mat'ls. and Supplies:		
Timber	183.78	.12
Explosives	8,129.52	5.21
Pipe (50%)	1,721.64	1.10
Track (50%)	1,145.28	.73
Supplies	9,078.92	5.82
Power	26,055.06	16.71
(4) Operating Equipment:		
Depreciation	16,175.34	10.38
(7) Miscellaneous:		
Repairs to equipment	5,391.58	3.46
Accounting	2,425.00	1.56
Fringe benefits	1,207.93	.78
Claimed costs	$113,467.04	$72.78
Suspended costs	43,312.04	27.78
Accepted costs	$ 70,155.00	$45.00
Timbering (including steel sets)	644½ ft.	
(2) Labor and Supervision:		
Labor	$ 2,152.75	$ 3.34
(3) Operating Mat'ls. and Supplies:		
Timber	12,776.11	19.82
Supplies	74.59	.12
(7) Miscellaneous:		
Fringe benefits	122.57	.19
Claimed costs	$ 15,126.02	$23.47
Suspended costs	8,036.52	12.47
Accepted costs	$ 7,089.50	$11.00

[illegible]

[illegible]

[illegible]	[illegible]	[illegible]
[illegible]	[illegible]	[illegible]
[illegible]	[illegible]	[illegible]
[illegible]	[illegible]	[illegible]

The above suspensions of $43,312.04 and $8,036.52 are subject to adjustment depending upon future drifting, crosscutting, and timbering costs. All costs of such work in excess of $45.00/foot for drifting and crosscutting and $11.00/foot for timbering, averaged over the entire project, are subject to disallowance when final settlement is made between the Operator and the Government of the exploration work provided by this contract.

The costs of steel sets, which are included in the above timbering costs, have been accepted provisionally by this audit. The contract, as amended, provides that drifts and crosscuts shall be supported as necessary using "standard drift sets" or rockbolts. It is recommended that the contract be further amended to allow the setting of steel sets in lieu of, but at the same maximum footage rates as for, timbering.

Item No. 4 Ventilation raises

Two timbered ventilation raises, each approximately 125 feet long, are provided for in the contract. The maximum cost applicable to this work item is $48.00 per linear foot, averaged over the total number of feet of work performed.

One 115 foot ventilation raise had been completed at March 31, 1960, at a cost of $5,310.33, or an average of $46.18 per foot, which is less than the maximum cost for Government participation. Work had not been started as of March 31, 1960, on the other raise provided by the contract.

The total claimed and accepted costs, as well as the cost per linear foot of ventilation raise, allocated to the various items of cost, are as follows:

Category & Item	Costs	
	Total	Per foot
Ventilation raise	115 feet	
(2) Labor and Supervision:		
Labor	$2,626.50	$22.84
Supervision	400.00	3.48
(3) Operating Mat'ls. and Supplies:		
Timber	572.68	4.98
Explosives	416.92	3.63
Supplies	129.00	1.12
Power	1,000.89	8.70

[illegible] above [illegible] 403,112.04 [illegible] [illegible] [illegible]

Category & Item	Costs Total	Costs Per foot
(7) Miscellaneous:		
Accounting	$ 110.00	$ .96
Fringe benefits	54.34	.47
Total claimed and accepted costs	$5,310.33	$46.18

IV. CONCLUSIONS

The audit disclosed that all costs charged to this project, with the exception of the suspensions aggregating $51,348.56 as itemized in the preceding section of this report, are reasonable and proper under the terms of the contract. A summary of the claimed and accepted costs, the allocation to items of work, and the amounts suspended are shown in Exhibit "A" attached to this report.

This contract contained numerous items of cost and units of work expressly designated as "maximums". The status of these maximums, after deduction of the disallowances discussed in Section III of this report, is summarized as follows:

	Maximum	Acceptable
Drifting and cross-cutting	8,600 feet	1,559 feet
Drifting and cross-cutting	$ 45.00/ft.(av.)	$ 45.00/ft.(av.)
Timbering	$ 11.00/ft.(av.)	$ 11.00/ft.(av.)
Rockbolting	8 bolts/ 5 ft.sec.	none
"	$ 5.00/bolt	none
Ventilation raises	$ 48.00/ft.(av.)	$ 46.18/ft.(av.)
Longhole drilling	$ 1.00/ft.(av.)	none
Diamond drilling	$ 6.35/ft.(av.)	none
" "	$ 69,850.00	none
Supervision and technical services	40 mos.	21 mos.
Supervision and technical services	$ 650.00/mo.	$ 633.33/mo.(av.)
Supervision and technical services	$ 26,000.00	$ 13,300.00
Total cost of project	$564,880.00	$156,399.09
Government participation	$282,440.00	$ 78,199.54

In addition to the above listed maximums, the contract provided that the Government's contribution to the cost of certain materials and supplies should be limited to its share of 50 percent of actual cost,

with the Government acquiring no salvage interest in such material and supplies. As indicated in category (3) Operating Materials and Supplies of Section III, such items have been included in costs for Government participation at 50 percent of their actual cost.

The contract further provided maximums relating to rates of depreciation, the total monthly rate, and sub-category totals in connection with depreciation allowances for use of company-owned equipment. None of these maximums have been exceeded, as is fully explained under category (4)(c) Depreciation of Section III.

Mr. Harper, the Operator's auditor, was not in Keetley at the time the on-site audit was completed. His assistants and Mr. Hansen, the general superintendent, were briefly informed of the audit findings. On May 9, 1960, the findings were discussed with H. M. Connors, Acting Field Officer, OME Region III, Denver, Colorado, who expressed his concurrence with the results.

C. E. Fisher

C. E. Fisher, OME Auditor

May 9, 1960

Exhibit "A"

Idm-E1218

New Park Mining Company

DMEA-4981

Summary of Costs and Allocation to Items of Work

	Costs per March 1960 MF-104	Water Disposal Facilities	Pump & Column Installation	Drifting & Crosscutting	Timbering	Ventilation Raises
(2) Labor and Supervision:						
Labor	$ 72,818.40	$15,393.50	$17,742.66	$ 34,902.99	$ 2,152.75	$2,626.50
Supervision	13,300.00	3,850.00	2,000.00	7,050.00		400.00
(3) Oper. Mat'ls. & Supplies:						
Timber	14,399.50	1,107.25	259.68	183.78	12,776.11	572.68
Explosives	8,841.64		295.20	8,129.52		416.92
Pipe	15,545.57	13,560.84	263.09	1,721.64		
Track	1,186.86	41.58		1,145.28		
Pump column	8,154.44		8,154.44			
Supplies	13,885.38	3,007.52	1,595.35	9,078.92	74.59	129.00
Power	27,055.95			26,055.06		1,000.89
(4) Operating Equipment:						
Depreciation	16,175.34			16,175.34		
(7) Miscellaneous:						
Repairs to Equipment	5,770.61	379.05		5,391.58		
Accounting	5,150.00	1,532.80	1,082.20	2,425.00		110.00
Fringe benefits	4,963.96	2,164.19	1,414.93	1,207.93	122.57	54.34
Total Claimed Costs	$207,747.65	$41,036.71	$32,807.55	$113,467.04	$15,126.02	$5,310.33
Suspensions	51,348.56	-0-	-0-	43,312.04	8,036.52	-0-
Acceptable Costs	$156,399.09	$41,036.71	$32,807.55	$ 70,155.00	$ 7,089.50	$5,310.33
Government participation @ 50%	$ 78,199.54	$20,518.35	$16,403.78	$ 35,077.50	$ 3,544.75	$2,655.16

OFFICE OF MINERALS EXPLORATION
CONTRACT ADMINISTRATION AND AUDIT DIVISION

AUDIT CERTIFICATE

I have examined the records and transactions of:

New Park Mining Company
907 Walker Bank Building
Salt Lake City, Utah

pertaining to Exploration Project Contract No. 14m-M1218, Docket No. DMRA 4981, dated June 23, 1958, including Amendments Nos. 1 thru 3, covering a project of exploration for Lead, Zinc and Copper located in Wasatch County, Utah, and referred to as Mayflower Mine for the period June 23, 1958 to March 31, 1959, inclusive.

My examination was made in accordance with generally accepted standards applicable in the circumstances.

The audit disclosed the following facts in regard to the amount to be paid the Contractor:

Total cost as billed by Contractor			$60,320.61
Exceptions: (See Audit Report for details)			
Prior to this audit	$3,622.20		
Less Reimbursement	636.56	$2,985.64	
During this audit		994.46	3,980.10
Total Net cost claimed			56,340.51
Add: Acceptable cost (not claimed) to offset disallowance			3,980.10
Total accepted cost claimed			60,320.61
Additional cost allowable		7,776.67	
Less: Offset used above		3,980.10	3,796.57
Total acceptable cost, if claimed			$64,117.18

The contract calls for a 50 percent participation of accepted costs. Therefore, if the project is otherwise accepted as having met terms of the contract, payments as follows are valid and proper.

On cost claimed	30,160.31
On additional cost if claimed	1,898.28
Total amount payable if claimed	32,058.59
Amount payable on audited claim	30,160.31
Amount reimbursed	28,349.20
Balance due Operator	1,811.11
Additional payable if claimed	$1,898.28

June 3, 1959

Donald T. Finch
Donald T. Finch
OMS Auditor

JUN 5 1959
O.M.E.

AUDIT REPORT

I. INTRODUCTION

On May 11, thru May 19, 1959, an interim audit (covering operations for the period June 23, 1958 to March 31, 1959) was made of the records and transactions pertaining to Exploration Project Contract No. Min-E1218, Docket No. DMEA 4981, dated June 23, 1958, including Amendments Nos. 1 thru 3 with the

New Park Mining Company
209 Walker Bank Building
Salt Lake City, Utah

covering a project for the exploration of Lead, Zinc and Copper on property commonly known as the Mayflower Mine near Keetley in Wasatch County, Utah.

The original records under this contract are maintained by Mr. Carl D. Harper, Auditor and Purchasing Agent for the company, at Keetley, Utah. Mr. Harper and his assistants Mr. Harry McMillan and Mr. Francis Smith and Mr. Gale A. Hansen, Mine Superintendent were consulted during the audit. Mr. M. E. Howes, Mining Engineer, USBM collaborated in in the audit. The cooperation and assistance of all concerned greatly facilitated the audit.

II. GENERAL INFORMATION ON RECORDS

The general books of the company with all usual accounting support are kept at Keetley, Utah and were made available to the Auditor. Such support consisted of payrolls, time cards, invoices, insurance policies, etc.

Since 1957 operation of the Mayflower Mine has been conducted by a group of former employees under a lease arrangement. The New Park Mining Company continued the purchasing of all materials and supplies which are charged to the lessees as used. All labor including shift foreman is performed by the lessees. Charges for direct mine supplies consumed and labor applied to the exploration project are summarized in monthly journal entries which are credited to the lessees' account. Payrolls and time cards maintained by the lessee were made available to the Auditor for corroboration of the monthly labor applicable to the exploration project.

Prior to the audit the Operators' Monthly Report and Voucher Forms MP-104 were prepared in part from memorandum data based on engineering specifications and in part from direct invoice charges.

Representatives of the Operator were advised by the Auditor that while engineering specifications had a definite value in their place they were, however, of little value as accounting support. Because of this situation it was necessary during the audit to compile all accounting data applicable to the project from source data. Mr. Clark Wilson, Vice-Presi-

JUN 5 1950

[illegible]

[illegible]

[illegible]

[illegible]

[

dent of the company and Mr. Harper advised that in the future adequate detailed summaries of project costs would be maintained.

III. SCOPE OF AUDIT AND FINDINGS

The audit was limited to ascertaining the accuracy, propriety and validity of the costs shown in the "Totals to Date" column of the form MP-104, Operator's Monthly Report and Voucher, for the month of March, 1959. Since by letter dated August 14, 1958, addressed to the Operator, the Executive Officer of the OGC Field Team, Region III waived the requirement for submission of supporting documents with the monthly forms MP-104, a complete and detailed audit and analysis of all costs was unnecessary.

The audit disclosed a considerable amount of improper distribution of charges to "Items of cost" shown on the Form MP-104 and also revealed numerous allowable charges applicable to the project which have not been claimed. Therefore, the audit findings presented below are those resulting from correction of the cost distribution. Unclaimed allowable charges are also listed.

(1). Subcontract Contracts

No items of cost applicable to this category had been incurred at the time of this interim audit.

(2). Labor and Supervision

(a) Labor

All labor applicable to the exploration project was performed by the lessee. Actual installation of Dynamite Pigs and Bang Gaters was on a labor contract rate of $8.00 per foot plus a flat rate of $200.00 per month for shift foreman supervision with fringe benefits at 11.5%. In addition the Operator incurred considerable additional labor costs of preparation for these installations on a man shift basis. These additional labor costs have not been claimed by the Operator thru either over sight or misunderstanding of the exploration contract.

The examining engineer and the Executive Officer of the OGC Field Team, Region III advise that they consider such costs as reasonable and necessary to the applicable installations.

Labor charges for drifting were based on the following labor contract amounts per foot of drift advance: Drifting $11.50/ft.; Hoisting $2.35/ft.; Haulage $4.15/ft. plus $16.00 per man shift for equipment installation.

[illegible]

All charges for labor during the period June 23, 1958 to March 31, 1959 were confirmed during the audit. Those charges based on unit rates were recomputed using footage which had previously been confirmed by the Examining Engineer during his monthly inspections. All charges on a man shift basis were confirmed by reference to payrolls and monthly summaries of man shifts worked by individuals which had been approved by the mine superintendent.

During the audit it was also confirmed that all charges for labor to the project had been credited on the general ledger of the Operator to the Mayflower Lease Account. An analysis of labor charges follows:

As Claimed	Instal. Transite Pipe	Instal. Pump Column	Drifting	Total
6433.5 ft at $2.00/ft	$12,867.00			
1513 ft. at $2.00/ft		$3,026.00		
173.5 ft at $11.80/ft			$2,047.30	
Hoisting at $2.35/ft			407.74	
Haulage at $4.15/ft			720.04	
65½ man shifts Installing Equip.			1,048.00	
Totals Claimed	$12,867.00	$3,026.00	$4,223.08	$20,116.08
Additional Labor Cost Allowable if Claimed				
22 man shifts Necessary timbering	$ 374.00			
152.5 man shifts Preparation of shaft		$2,449.00		
289 man shifts Preparation of level		3,740.00		
53 man shifts installing Power Cable		848.00		
Total Additional	$ 374.00	$7,037.00		$ 7,411.00
Total Labor if additional Claimed	$13,241.00	$10,063.00	$4,223.08	$27,527.08

(b) Supervision

As previously stated the Operator credited the Lessee for $200.00 per month for shift foreman supervision in accordance with labor contract for actual installation of Transite Pipe and Pump Column. These charges to the project were confirmed during the audit. In addition, the Operator claimed an additional $450.00 per month for supervision and engineering for each month July, 1958 thru March, 1959 with the exception of the month of October when a charge of $100.00 was made. The exploration contract author-

[illegible]

[illegible]

[illegible]

izes a maximum allowable charge for supervisors and technicians of $650.00 per month. Analysis of claimed costs for supervision during the period June 23, 1958 to March 31, 1959 is as follows:

Shift foreman charges for Transite Pipe and Pump column Installation per labor contract	$1,800.00
Superintendent, Engineers & Geologist, Master Mechanic, & Chief Electrician	3,700.00
Acceptable total	$5,500.00

The Operator's records distributed the foregoing charges for supervision to:

Transite Pipe and Pump Column Installations	$4,600.00
Drifting (2 mo.)	900.00
Total as above	$5,500.00

During the audit the following computation was made from the Company's salary records to show recorded time devoted to the exploration project during period June 23, 1958 to March 31, 1959, by the following supervisory and technical employees of the Company.

Gale Hansen, Mine Sup. 708 hrs. at $3.00	$2,124.00
Walter Bower, Geol. Engr. 154 hrs. at $2.70	415.80
Earl Annes, Geol. Engr. 150 hrs. at $2.50	375.00
Robbie Archer, Geol. Engr. 368 hrs. at $1.50	552.00
Phillip Santy, Master Mech. 237 hrs. at $2.70	639.90
Edwin R. Booth, Chief Elec. 407 hrs. at $2.60	1,058.20
J. Santy, Assist. Engr. 16 hrs. at $1.50	24.00
Total	$5,188.90
Portion Claimed by Operator on MF-104	$3,700.00

In view of the foregoing analysis the Operator's charges of $650.00 (allowable maximum) for supervision and technical services is considered reasonable by the examining engineer, the executive officer of the field team and the auditor.

(3) Operating Materials and Supplies

All charges to this category were confirmed by detailed audit and analysis of vendors invoices and daily charges from warehouse. Prices used on warehouse issues were based on average invoice cost plus transportation without any carrying charge being added. Warehouse issue prices were confirmed by examination of representative invoices and freight bills. Direct charges were confirmed by the examination of the applicable invoices.

Analysis of the supplies accounts after adjustment for errors in distribution and disallowances follows:

Timber: As Claimed	Instal. Transite Pipe	Instal. Pump Column	Drifting	Total
2384 B Ft. 8x8	$147.56			
470 B Ft. 4x6	29.08			
1375 B Ft. 2x6	85.09			
233 B Ft. 2x8	14.40			
75 B Ft. 3x6	4.64			
100 B Ft. 3x8	6.19			
163 B Ft. 3x10	10.09			
4154 B Ft. 8x8		272.50		
1632 B Ft. 8x8		106.08		
213 B Ft. 8x8		13.31		
7 B Ft. 4x6		.46		
2 B Ft. 4x6		.13		
2081 B Ft. 2x6		136.51		
209 B Ft. 2x6		13.06		
70 B Ft. 2x6		4.55		
49 B Ft. 2x8		3.21		
8 B Ft. 2x8		.53		
713 B Ft. 3x10			42.49	
160 B Ft. 4x6			10.62	
460 B Ft. 3x8			30.50	
46 Pc. 6x8 at $1.70 ea.			78.20	
Acceptable timber cost claimed	$297.05	$550.34	$161.81	$1009.20
Additional timber cost Allowable if claimed 3351 B Ft. (assorted sizes)		217.52		217.52
Total acceptable timber cost if claimed	$297.05	$767.86	$161.81	$1226.72

(2) [illegible]

[illegible]

[illegible]

[

Explosives: As Claimed	Instal. Pump Column	Drifting	Total
613 sticks CLX Pwd.		$ 60.68	
5737 sticks BBX Pwd.		378.64	
1105 Electric Caps		306.65	
Allowable Claimed Total		$745.97	$745.97
Additional cost of caps and Explosives allowable if claimed	$9.05		9.05
Total accepted cost of Explosives if claimed	$9.05	$745.97	$755.02

The audit disclosed an overcharge of $5.18 for explosives for the month of February, 1959, which is disallowed in this report.

Pipe (50% of Cost)*	Transite Pipe and Fitgs.	Air & Water Lines	Total
6433.5 ft. at $3.7935/ft ($24,405.48)	$12,202.74		
166 Ft.6" at $1.10/ft ($182.60)		91.30	
166 Ft. 2" at .48/ft ($79.68)		39.84	
26-6" Vic. Coup. at $6.45/ea ($167.70)		83.85	
19-2" Vic. Coup. at $1.74/ea ($33.06)		16.53	
Allowable Total Cost of Pipe	$12,202.74	$231.52	$12,434.26

All pipe and applicable freight invoices were examined during the audit. The audit disclosed overcharges of $262.52 for Transite Pipe and $231.62 for Water and Air Lines. These overcharges have been disallowed in this report.

*The contract stipulates that the foregoing items of pipe be claimed at 50% of cost and provides the Government will not acquire any salvage interest in such items.

Track (At 50%)*	Instal. Pump Column	Drifting	Total
347 Ft. 40 lb. Rail at .693 ($240.48)		$120.24	
29 pcs. 38" Ties at .42 ea ($12.18)		6.09	
16 pcs. 9Ft Ties at $1.19 ea ($19.04)		9.52	

Track (at 50%)	Instal. Pump Column	Drifting	Total
1 keg spikes at $25.04		$12.52	
1 keg bolts at $39.20		$19.60	
Allowable total as claimed		$167 .97	
Additional track cost if claimed			
120 Ft. 40 lb. rail at .693 ($83.16)	$41.58		
Total Acceptable cost if claimed	$41.58	$167.97	$209.55

The audit disclosed an over charge of $391.93 of track cost applicable to Drifting which has been disallowed in this report.

*Chargeable at 50% of cost similar to Pipe.

Pump Column (at 50%)	Audited Invoice Cost
581 Ft. 12" Pipe	$ 3,808.06
932 Ft. 10" Pipe	4,744.39
64-12" Couplings	924.69
106-10" Couplings	1,382.25
2-12"-45° Ells	166.95
4-10"-45° Ells	139.54
Shop work, welding, & Prefabrication	909.84
20 splice housings	170.00
2 splice kits	30.00
2-10" Check flow valves	2,182.80
2-10" Flanged gate valves	553.48
642 Ft.-2" Pipe	15.52
100 Cable straps	13.49
100 lbs. welding rod	21.88
77 Machine bolts	36.54
4-10" Weld flanges	102.09
1-6" Weld flange	12.18
2-Circuit Breakers	512.00
9-Transformers	276.00
2-Switch Racks	100.00
18-Copper Sleeves	16.08
137 Column Hangers	191.10
Total Audited Invoice Cost	$16,308.88
Acceptable Cost (50%)	$8,154.44

The audit disclosed an over charge of $95.38 applicable to column hangers which has been disallowed in this report.

*Chargeable at 50% of cost similar to pipe.

[illegible]

Supplies	Instal. Transite Pipe	Drift	Total
591 yds. Ballast Gravel	$2,279.46		
20 Coils	110.49		
43 Bits		565.45	
42 pcs. 6.5 Ft. Steel		156.66	
18 pcs. Shank Steel		67.50	
100 Ft. 2" Sand Blast Hose		153.00	
300 Ft. 2" Hose		459.00	
Frgt. on Hose		11.30	
Gundey Clamps & Hose Fttgs.		46.91	
8 Hose Couplings		8.80	
Nuts & Bolts		1.98	
Spikes		28.80	
1 Bag Dynamite Cement		6.36	
Accepted Total Cost of Supplies	$2,389.95	$1,505.76	$3,895.71

The audit disclosed an overcharge on bits of $7.83 which has been disallowed in this report.

Power

The Operator has made no claim for power cost prior to the start of drifting operations in February, 1959. The auditor was advised that charges for power as claimed were based on the superintendents estimated cost for power as set forth in the Operator's original application for an exploration loan.

During the audit the examining engineer and the auditor reviewed the nature of the operations. This review of operations was subsequently discussed with the Executive Officer of the OME Field Team, Region III. It is our conclusion that the most feasible and equitable manner of allocating power costs to the exploration project in this case is on a rock ton hoisted basis.

During the course of the audit the following analysis was prepared.

	Feb.	March	Total
Total rock tons hoisted	5,704	5,299	
OME rock tons hoisted	1,503	504	
Total mine power bill Net of cash discount	$6,374.50	$6,485.65	
Cost per rock ton hoisted	$1.1175	$1.2239	
Power cost prorated to OME project	$1,679.60	$ 616.85	$2,296.45
Total power cost as claimed			968.13
Additional power cost acceptable if claimed			$1,328.32

(4) Operating Equipment

Rental

None authorized by this Contract.

Purchases

None authorized by this Contract.

Depreciation

Daily logs of equipment use are not maintained. The examining engineer advised he was of the opinion, based on monthly examinations, that the equipment listed for depreciation was in use as indicated.

During the audit depreciation charges were compared with the monthly rates authorized by the exploration contract.

The depreciation charges consisted of the following items:

1300 Ft. 5000 V Cable, 2 Months at $67.50/Mo	$ 135.00
1 Jumbo, 1 Month at $250.00/Mo	250.00
1-630 Wimco, 2 Months at $168.33/Mo	336.66
1-Train Car Loader (2 Months Partial)	315.68
1 Charge Panel 2 Months at $12.33/Mo	24.66
Motor Batteries 2 Months at $54.16/Mo	108.32
1 Transformer 2 Months at $30.00/Mo	60.00
1-25 H.P. Fan 2 Months at $11.67/Mo	23.34
Allowable cost of Depreciation	$1,253.66

(5) Initial Rehabilitation and Repairs

None authorized by this Contract.

(6) New Buildings and Improvements

None authorized by this Contract.

(7) Miscellaneous

(a) Repairs to Equipment

Analysis of the claimed costs of repairs disclosed the following:

Repair Parts for Demolition Tool ("Cement Buster")	$ 379.03
12 Nails	67.93
Total repairs as claimed	$ 446.96

Add:
Repairs originally charged to Supplies-Distribution corrected during audit

[illegible]

Repair Parts for Jumbo	$6.98	
Freight on Repair Parts	6.49	$ 13.47
Sub Total		460.43
Less: 12 Bolls transferred to mine supplies (Expendable Points)		67.93
Total Repairs-Distribution corrected by audit		$392.50

Invoices supporting all of the foregoing charges for repairs to equipment were examined during the audit.

The acceptable cost of repairs are applicable to:

Remote Pipe Installation	379.03
Drifting	13.47
Total Accepted Cost of Repairs	$392.50

(b) Fringe Benefits

Fringe Benefits consist of FICA; State and Federal Unemployment; Workmens Compensation Insurance; Hospital and Group Life Insurance. Examination of the Operator's files disclosed the following prevailing rates:

	1958	1959
FICA	2.25	2.50
Unemployment		
State	1.60	1.80
Federal	0.30	0.30
Workmens Compensation	3.906	3.225
Hospital	2.78	2.70
Group Life Insurance	2.09	2.31
Total Fringe Benefit Rates	12.926%	12.835%

Analysis of claimed cost of Fringe Benefits is as follows:

Charged to Lessee:		
Labor	$1,949.19	
Shift Supervision	207.00	$2,156.19
Applicable to allowable company supervision		382.04
Total allowable Fringe Benefits as claimed		$2,538.23

Additional Fringe Benefits were credited to Lessee for labor on power cable installation for pump column but not claimed	$ 97.58
Total allowable Fringe Benefits if claimed	$2,655.75

(c) Accounting

The Operator has claimed $250.00 per month for accounting during the period July 1, 1958 to March 31, 1959 with the exception of the month of October, 1958, when $150.00 was claimed. Total claimed by the Operator for accounting is $2,150.00. This amount is considered to be reasonable in light of the following tabulation prepared during the audit from monthly time records of the office force for the period June 25, 1958 to March 31, 1959.

Carl D. Harper, Auditor 362 hrs. at $2.80/hr	$1,013.60
Harry McMillan, Bookkeeper 215 hrs. at $2.50/hr	537.50
Francis Smith, Bookkeeper 289 hrs. at $2.50/hr	722.50
Barbara Wilson, Steno-Clerk 189 hrs. at $1.50/hr	283.50
Total	$2,557.10

Other Observations

Drifting Costs in Excess of Allowable Maximum

The contract provides that the maximum allowable cost of drifting is $45.00 per linear foot on an average basis. The Field Team is therefore suspending drifting costs reported during the course of such work which exceed this amount. Such suspended costs may be subsequently reinstated when the work is completed if the total average cost of drifting with such reinstatement is within the allowable maximum.

Prior to the audit the Field Team had suspended a total reported cost of Drifting in excess of allowable maximum in the amount of $3,622.20. Disallowances of sundry overcharges applicable to drifting reduced the total cost of drifting by $650.03. These disallowances therefore reduced the suspended excess over allowable maximum to $2,972.17. If the Operator elects to claim an additional allowable amount of power cost applicable to drifting in the amount of $1,328.32 (See comments under power) the amount of suspended drifting cost in excess of allowable maximum will be increased to $4,300.49 as of March 31, 1959, as shown by the following summary analysis of drifting costs.

[illegible]

[illegible]

[illegible]

Total advance March 31, 1959 173.50 ft.
Maximum allowable cost of Drifting at $45.00 ft. $7,807.50

Drifting Costs as Adjusted by Audit

Labor	$ 4,223.08
Supervision	900.00
Timber	161.81
Explosives	745.97
Pipe (50% basis)	231.52
Track (50% basis)	167.97
Supplies	1,505.76
Power (as claimed)	968.13
Depreciation	1,253.66
Repairs to Equipment	13.47
Fringe Benefits	221.77
Accounting	400.00
Sub Total	$10,793.14
Drifting cost in excess of Allowable maximum	
Allowable cost of Drifting as above	$7,807.50

Drifting costs if additional Power cost is claimed

Sub total of Drifting cost above	$10,793.14
Additional Power cost if claimed	1,328.32
Total Drifting cost if claimed	12,121.46
Drifting cost in excess of allowable maximum	
Allowable Drifting cost as above	$7,807.50

IV. CONCLUSIONS

The audit disclosed that all costs charged to this project with the exception of the net disallowances aggregating $5,980.10 as itemized in the preceding section of this report, are reasonable and proper under the terms of the contract. In addition there are other costs applicable to the contract in the net amount of $7,776.67 that were unclaimed at the time of the audit which are allowable if claimed.

The adjustments between "Items of Costs" as shown on the March, 1959 NF-104, the disallowances, reconstatements, the accepted costs as claimed, additional costs acceptable if claimed and total costs as disclosed by this audit are summarized in Exhibit A attached hereto.

[illegible]

[illegible]

[illegible]

At the conclusion of the audit on May 19, 1959, the findings were discussed in detail with Mr. Clark L. Wilson, Vice-President and Mr. Carl B. Harper, Auditor at the Salt Lake City Office of the Company. Mr. M. H. Hawes, Mining Engineer, USBM was present at this conference.

On May 21, 1959, these findings were discussed in detail with Mr. J. W. Townsend, Executive Officer, OGE Field Team, Region III. Mr. Townsend and Mr. Hawes concur with the Auditor on the disallowances, reestatements and the acceptability of the additional costs if claimed as previously itemized in this report.

June 3, 1959

Donald T. Finch
Donald T. Finch
OGE Auditor

IDM-K1218

DOCKET NO. DMRA 4981

NEW PARK MINING COMPANY

EXHIBIT A

SUMMARY OF COSTS
JUNE 23, 1958 THRU MARCH 31, 1959

	Total to Date MF-104 March, 1959	Distribution Corrected	Prior Disallowances	Audit Disallowances	Reinstatements	Acceptable Claimed Costs	Additional Costs Acceptable if Claimed	Total Costs
Independent Contracts								
Drilling								
Bulldozing								
Crosscutting								
Drifting								
Labor and Supervision								
Labor	$20,116.08	$20,116.08				$20,116.08	$7,411.00	$27,527.08
Supervision	5,500.00	5,500.00				5,500.00		5,500.00
Technical Services								
Operating Matls. & Supplies								
Timber	1,009.20	1,009.20				1,009.20	217.52	1,226.72
Explosives	751.15	751.15		$ 5.18		745.97	9.05	755.02
Pipe at 50%	12,465.26	12,928.40		494.14		12,434.26		12,434.26
Track at 50%		559.90		391.93		167.97	41.58	209.55
Column Hangers	191.10							
Ballast Gravel	2,322.02							
Pump Column at 50%	8,058.72	8,249.82		95.38		8,154.44		8,154.44
Supplies	3,518.23	3,903.54		7.83		3,895.71		3,895.71
Power		968.13				968.13	1,328.32	2,296.45
Operating Equipment								
Rental								
Purchase								
Depreciation	1,253.66	1,253.66				1,253.66		1,253.66

IBM-M1218

DOCKET NO. BMSA 4981

BEN PARK MINING COMPANY
EXHIBIT A

SUMMARY OF COSTS
JUNE 23, 1958 THRU MARCH 31, 1959

	Total to Date MP-104 March, 1959	Distribution Corrected	Prior Disallowances	Audit Disallowances	Reinstatements	Acceptable Claimed Costs	Additional Costs Acceptable if Claimed	Total Costs
Initial Rehab. & Repairs								
New Bldgs. & Improve.								
Miscellaneous								
Repairs to Equip.	$ 446.96	$ 392.50				$ 392.50		$ 392.50
Sampling & Analyses								
Payroll Taxes	2,538.23							
Liability Ins.								
Accounting	2,150.00	2,150.00				2,150.00		2,150.00
Fringe Benefits		2,538.23				2,538.23	$ 97.52	2,635.75
Drifting Cost in Excess of Allowable Maximum			$3,622.20		$636.56	2,985.64	1,320.78	4,306.42
Totals	$60,320.61	$60,320.61	$3,622.20	$994.46	$636.56	$56,340.51	$7,776.67	$64,117.18

Government's Copy

TERMINATION AGREEMENT

It is agreed this 1st day of March, 1962, between the United States of America, acting through the Department of the Interior, Office of Minerals Exploration, hereinafter called the "Government", and New Park Mining Company, hereinafter called the "Operator", parties to that certain Exploration Project Contract No. Idm-E1218, Docket No. DMEA-4981, dated June 23, 1958, as amended, hereinafter called the "Contract", that:

1. Effective November 1, 1961, the Contract and all obligations of the parties thereunder, except as otherwise herein expressly provided, shall be and are hereby terminated.

2. The Government shall contribute only to the unit costs of the work performed prior to said effective date, except for subsequent assays.

3. The Operator shall promptly perform all winding-up and settlement actions provided for in the Contract, including furnishing to the Government five copies of a final report (in addition to the final monthly report) which shall include a geological and engineering evaluation of the results of the work performed under the Contract with an estimate of the ore reserves resulting from such work, conplete assay data, adequate geological and engineering maps or sketches, and a summary of the work performed and the unit costs thereof.

4. All rights of the Government respecting certification of possible production, percentage royalty and liens to secure the payment thereof, reports (including preservation of the Operator's records), accounts, audits, and the right to recover any overpayment are hereby preserved.

5. The Operator hereby releases and agrees to save the Government harmless from all claims or demands under or arising out of said Contract except as otherwise provided in this termination agreement.

IN WITNESS WHEREOF, these parties have executed this agreement as of the day and year first above written.

THE UNITED STATES OF AMERICA

By George Turnich

Director, Office of Minerals Exploration

NEW PARK MINING COMPANY

By

Title Secretary

MAY 17 1962
O.M.E

Government's copy

Counsel
Seller
Brown

App'd. Sol.
Talbot
Johnson
Selfridge

TERMINATION AGREEMENT

It is agreed this 1st day of March, 1962, between the United States of America, acting through the Department of the Interior, Office of Minerals Exploration, hereinafter called the "Government," and New Park Mining Company, hereinafter called the "Operator," parties to that certain Exploration Project Contract No. Idm-E1218, Docket No. DMEA-4981, dated June 23, 1958, as amended, hereinafter called the "Contract," that:

1. Effective November 1, 1961, the Contract and all obligations of the parties thereunder, except as otherwise herein expressly provided, shall be and are hereby terminated.

2. The Government shall contribute only to the unit costs of the work performed prior to said effective date, except for subsequent assays.

3. The Operator shall promptly perform all winding-up and settlement actions provided for in the Contract, including furnishing to the Government five copies of a final report (in addition to the final monthly report) which shall include a geological and engineering evaluation of the results of the work performed under the Contract with an estimate of the ore reserves resulting from such work, complete assay data, adequate geological and engineering maps or sketches, and a summary of the work performed and the unit costs thereof.

4. All rights of the Government respecting certification of possible production, percentage royalty and liens to secure the payment thereof, reports (including preservation of the Operator's records), accounts, audits, and the right to recover any overpayment are hereby preserved.

5. The Operator hereby releases and agrees to save the Government harmless from all claims or demands under or arising out of said Contract except as otherwise provided in this termination agreement.

IN WITNESS WHEREOF, these parties have executed this agreement as of the day and year first above written.

THE UNITED STATES OF AMERICA

By George Turnick Jr.
Director, Office of Minerals Exploration

NEW PARK MINING COMPANY

By Frank H. McGowan

Title Office Manager

Government's Copy

EXPLORATION PROJECT CONTRACT
NEW PARK MINING COMPANY
DOCKET NO. DMEA-4981

AMENDMENT NO. 7

It is agreed this 21st day of June, 1960, between the United States of America, acting through the Department of the Interior, Office of Minerals Exploration, hereinafter called the "Government," and New Park Mining Company, hereinafter called the "Operator," that Exploration Project Contract No. Idm-E1218 (Docket No. DMEA-4981), dated June 23, 1958, as amended, hereinafter called the "Contract," is further amended as follows, effective June 23, 1958:

PART ONE

WHEREAS, it has been found by experience to date, as verified by two audits by the Government, that the actual costs as provided for in the Contract far exceed the maximums allowed by the Contract, and there is small likelihood that the actual costs in the future could become significantly less than heretofore; and

WHEREAS, auditing, accounting, and contract administration costs would be greatly diminished by placing most items of work on a fixed unit cost basis:

NOW, THEREFORE,

1. In Annex II, under the title "Article 13. Changes and added provisions", the following provision is added:

(f) In addition to the costs of work estimated in Exhibit "A" by categories of actual costs, the cost of work requirements specified in Exhibit "A" as "Fixed Unit Costs" are allowable costs of the project. The Government will contribute to the fixed unit costs as work units are acceptably performed. A "Fixed Unit Cost" is an agreed price for each unit of work so performed regardless of costs incurred by the Operator. Costs set forth in Exhibit "A" include all allowable costs of the work to be performed under the Contract.

2. In "Exhibit A", the title, "Estimated Costs of the Project", is deleted with all material thereunder, and the following is substituted:

Estimated Costs of the Project 1/

Actual Costs:

Category (1) Independent Contracts

11,000 feet diamond drilling @ $6.35/ft. 2/	$69,850.00

Categories (2) Labor and Supervision

(3) Operating Materials & Supplies,

and

(7) Miscellaneous

None except:

Water disposal facilities	41,036.71*
Pumps and Pump column installation	32,807.55*

Categories (4) Operating Equipment

(5) Initial Repairs & Rehabilitation,

and

(6) New Buildings, Fixtures & Installations

None

Fixed Unit Costs

Installation of water doors @ $980.00/ea.

Drifting and crosscutting @ $45.00/ft.

Timbering or setting of steel sets @ $11.00/ft.

Rockbolting @ $5.00/bolt

Timbered raising @ $46.00/ft.

Longhole drilling @ $1.00/ft.	
Assaying @ $1.00/each determination	
Incidental allowance 3/ for each foot of diamond drilling completed @ $.25/ft.	$421,185.74
Estimated Total Cost of the Project	$564,880.00
Government Participation @ 50%	$282,440.00

1/ An asterisk indicates a maximum in addition to the maximum set forth in the contract form.

2/ Includes all costs of drilling whatsoever except compressed air and water.

3/ For compressed air and water.

PART TWO

WHEREAS, it has been determined by actual practice that in certain instances the standard and customary use of mine timbers has proved inadequate for support of drifts and crosscuts, and that, instead of such timbering, steel ring sets are required; and

WHEREAS, while the steel ring sets involve a substantially greater expense than the usage of standard mine timbering, the added cost shall be for the Operator's sole account;

NOW, THEREFORE,

In Exhibit "A" under the heading, Description of the Work, as amended by Amendments Nos. 2, 3, and 5, delete Item No. 3, and substitute the following:

3. Drifting and Crosscutting

Drift and crosscut westerly on the 2005 level an estimated 6,000 feet. Also crosscut approximately 2,600 feet additional on the 2005 level and on the 800 level, to explore favorably mineralized areas and for diamond drill and long-hole percussion drill stations. The total of all drifting and crosscutting

may not exceed 8,600 feet. The drifts and crosscuts initially shall be approximately 7 feet by 10 feet in rock section, but periodically the bottom two feet may be back filled in connection with construction of a drainage ditch. Drifts and crosscuts shall be supported as necessary using standard drift sets, steel ring sets, or rock bolts and head plates.

Executed in quintuplicate the day and year first above written.

THE UNITED STATES OF AMERICA

By Frank E. Johnson
Acting Director, Office of
Minerals Exploration

NEW PARK MINING COMPANY

By

Title Executive Vice President

Government's Copy

EXPLORATION PROJECT CONTRACT
NEW PARK MINING COMPANY
DOCKET NO. DMEA-4981

AMENDMENT NO. 6

It is agreed this 27th day of November, 1959, between the United States of America, acting through the Department of the Interior, Office of Minerals Exploration, hereinafter called the "Government," and New Park Mining Company, hereinafter called the "Operator," that Exploration Project Contract No. Idm-E1218 (Docket No. DMEA-4981), dated June 23, 1958, as amended, hereinafter called the "Contract," is further amended as follows, effective June 23, 1958:

In Exhibit "A", under the heading Description of the Work, Item No. 2, amended by Amendment No. 1, is further amended to read as follows:

2. Pumps and pump column installation

Install a twelve-inch steel water column from the new 2005 level to the 1630 level. From the 1630 level to the 800 (drainage tunnel) level, install a ten-inch steel water column; install two 350 HP pumps on the 1630 level; install two 450 HP submersible pumps on the 2005 level; and make the necessary rock excavations on the 2005 level for pump installation and adequate sump.

This Amendment shall not be construed to increase the estimated total cost of the project, the aggregate amount which the Government may be required to contribute, nor the amount of any item designated as maximum.

Vernon Hoffman
Soller
App'd. Sol. Off.
Gerald Talbut Selfridge

Executed in quintuplicate the day and year first above written.

THE UNITED STATES OF AMERICA

By Frank E. Johnson
Acting Director, Office of Minerals Exploration

NEW PARK MINING COMPANY

By [illegible]

Title Vice President

November 13, 1959

Docket No. DMEA-4981
New Park Mining Company
Mayflower Mine
Wasatch County, Utah
Contract No. Idm-E1218

JUSTIFICATION FOR AMENDMENT NO. 6

There has been some discussion, pro and con, as to rock excavation done in connection with the cited contract, as pertaining to pump installation and preparation of sump. If the Operator, in its original application, had stated that a considerable amount of excavation would be required to install pumps and for sump enlargement, such a proviso would have been specifically written into the contract. However, since we had no knowledge of such requirement, the contract merely stated "install two - - - submersible pumps on the 2005 level."

Perhaps it could properly be argued that necessary space and necessary sump room is an integral part of pump installation, but in all of our contracts we have dealt with rock excavation as a separate work item. However, there is little doubt that the work really was necessary, and since it has already been cleared by the field engineers and field auditors, we have prepared a clarifying amendment accordingly.

W. R. Griswold

Government's Copy

EXPLORATION PROJECT CONTRACT
NEW PARK MINING COMPANY
DOCKET NO. DMEA-4981

AMENDMENT NO. 5

It is agreed this 9th day of October, 1959, between the United States of America, acting through the Department of the Interior, Office of Minerals Exploration hereinafter called the "Government," and New Park Mining Company, hereinafter called the "Operator," that Exploration Project Contract No. Idm-E1218 (Docket no. DMEA-4981), dated June 23, 1958, as amended, hereinafter called the "Contract," is further amended as follows, effective June 1, 1959.

In Exhibit "A" under the heading, Description of the Work, as amended by Amendment Nos. 2 and 3, is further amended as follows:

3. Drifting and Crosscutting.

Drift and crosscut westerly on the 2005 level an estimated 6,000 feet. Also crosscut approximately 2,600 feet additional on the 2005 level and on the 800 level, to explore favorably mineralized areas and for diamond drill and long-hole percussion drill stations. The total of all drifting and crosscutting may not exceed 8,600 feet. The drifts and crosscuts initially shall be approximately 7 feet by 10 feet in rock section, but periodically the bottom two feet may be back filled in connection with construction of a drainage ditch. Drifts and crosscuts shall be supported as necessary using standard drift sets or rock bolts and head plates.

This Amendment shall not be construed to increase the estimated total cost of the project, the aggregate amount which the Government may be required to contribute, nor the amount of any item designated as maximum.

Executed in quintuplicate the day and year first above written.

THE UNITED STATES OF AMERICA

By Frank P. Johnson
Acting Director, Office of
Minerals Exploration

App'd. Sol. Off.
Fallert
Selfridge

NEW PARK MINING COMPANY

By Chas. S. Wilson

Title Vice President

Government's copy

EXPLORATION PROJECT CONTRACT
NEW PARK MINING COMPANY
DOCKET NO. DMEA-4981

J. Lynd Hoffmann
App'd. Sol. O.
Talbot
Selfridge

AMENDMENT NO. 4

It is agreed this 11th day of August, 1959, between the United States of America, acting through the Department of the Interior, Office of Minerals Exploration, hereinafter called the "Government," and the New Park Mining Company, hereinafter called the "Operator," that Exploration Project Contract No. Idm-E1218 (Docket No. DMEA-4981), dated June 23, 1958, as amended, hereinafter called the "Contract," is further amended, effective July 17, 1959, as follows:

1. In Exhibit "A", under the heading, Description of the Work, item No. 6 is amended to read as follows:

6. Long-Hole Percussion Drilling

An estimated 20,000 feet of long-hole drilling shall be performed to probe the walls of the crosscuts and drifts. The locations of the holes shall be subject to Government approval.

This amendment shall not be construed to increase the estimated total cost of the project, the aggregate amount which the Government may be required to contribute, nor the amount of any item designated as maximum.

Executed in quintuplicate the day and year first above written.

THE UNITED STATES OF AMERICA

By Frank E. Johnson
Acting Director, Office of
Minerals Exploration

NEW PARK MINING COMPANY

By Clark Wilson

Title Vice President

DMEA Form 7
(12-56)

OFFICIAL FILE COPY

Date	Surname	Code

August 10, 1959

Memorandum for the Files

From: Chief, Division of Minerals

Subject: Justification for Amendment No. 4 for Docket No. DMEA-4981, New Park Mining Company, Mayflower Mine, Wasatch County, Utah, Contract No. Idm-E1218, Lead-Zinc-Copper.

In a letter dated July 15, 1959, the Operator requests the deletion of the contract stipulation which provides that spacing of "fans" of long-hole drilling be not less than 300 feet.

The Operator's contention has been presented in a reasonable manner, and is endorsed by the Field Team. We have therefore, prepared an Amendment No. 4 which makes such long-hole drilling only subject to Government approval.

W. R. Griswold

W. R. Griswold

WRG/er
CC: Docket
Dir Read File
Chron.

8623

Government's copy

J. Lynch
H. Offland
App'd. Sol. Off.
Financial
Talbot
Martin

EXPLORATION PROJECT CONTRACT
NEW PARK MINING COMPANY
DOCKET NO. DMEA-4981

AMENDMENT NO. 3

It is agreed this first day of April, 1959, between the United States of America, acting through the Department of the Interior, Office of Minerals Exploration, hereinafter called the "Government," and New Park Mining Company, hereinafter called the "Operator," that Exploration Project Contract No. Idm-E1218 (Docket No. DMEA-4981), dated June 23, 1958, as amended, hereinafter called the "Contract," is further amended as follows:

In Exhibit "A" under the heading, Description of the Work, item No. 3, as amended by Amendment No. 2, is further amended to read as follows:

3. Drifting and Crosscutting.

Drift and crosscut westerly on the 2005 level an estimated 6,000 feet. Also crosscut approximately 2,600 feet additional on the 2005 level and on the 800 level, to explore favorably mineralized areas and for diamond drill stations. The total of all drifting and crosscutting may not exceed 8,600 feet. The drifts and crosscuts initially shall be approximately 7 feet by 10 feet in rock section, but periodically the bottom two feet may be back filled in connection with construction of a drainage ditch. Drifts and crosscuts shall be supported as necessary using standard drift sets or rock bolts and head plates.

This Amendment shall not be construed to increase the estimated total cost of the project, the aggregate amount which the Government may be required to contribute, nor the amount of any item designated as maximum.

Executed in quintuplicate the day and year first above written.

THE UNITED STATES OF AMERICA

NEW PARK MINING COMPANY

By [signature] By [signature]

Acting Director, Office of Minerals Exploration

Title Vice President

OFFICIAL FILE COPY
O. M. E.
RECEIVED APR 27 1959

DATE	INITIALS	CODE

Government's copy

EXPLORATION PROJECT CONTRACT
NEW PARK MINING COMPANY
DOCKET NO. DMEA-4981

AMENDMENT NO. 2

It is agreed this 20th day of March, 1959, between the United States of America, acting through the Department of the Interior, Office of Minerals Exploration, hereinafter called the "Government," and New Park Mining Company, hereinafter called the "Operator," that Exploration Project Contract No. Idm-E1218 (Docket No. DMEA-4981), dated June 23, 1958, as amended, hereinafter called the "Contract," is further amended as follows:

1. In Exhibit "A" under the heading, Description of the Work, item No. 3 is revised to read as follows:

3. Drifting and crosscutting.

Drift and crosscut westerly on the 2005 level an estimated 6,000 feet, and crosscut approximately 2,600 feet additional in favorable mineralized areas, not to exceed an aggregate of 8,600 feet of drifts and crosscuts. The drifts and crosscuts initially shall be approximately 7 feet by 10 feet in rock section, but periodically the bottom two feet may be back filled in connection with construction of a drainage ditch. Drifts and crosscuts shall be supported as necessary using standard drift sets or rock bolts and head plates.

2. In Exhibit "A" under the heading, Estimated Costs of the Project, there is added the following:

"Rock bolting, $5.00 per steel rock bolt. Not more than eight bolts in any five foot linear section will be allowed as cost for contribution by the Government."

This amendment shall not be construed to increase the estimated total cost of the project, the aggregate amount which the Government may be required to contribute, nor the amount of any item designated as maximum.

J. Lynn
Hoffman
Unsigned
Chamberlin
Selfridge

Executed in quintuplicate the day and year first above written.

THE UNITED STATES OF AMERICA

By Frank E. Johnson
ACTING Director, Office of Minerals Exploration

NEW PARK MINING COMPANY

By Robt. Wilson

Title Vice President

Government's copy

MAR 13 1959
O.M.E.

EXPLORATION PROJECT CONTRACT
NEW PARK MINING COMPANY
DOCKET NO. DMEA-~~1635~~ 4981

AMENDMENT NO. 1

It is agreed this 13th day of February 1959, between the United States of America, acting through the Department of the Interior, Office of Minerals Exploration, hereinafter called the "Government," and New Park Mining Company, hereinafter called the "Operator," that Exploration Project Contract No. Idm-E1218 (Docket No. DMEA-4981), dated June 23, 1958, hereinafter called the "Contract," is amended, as follows:

1. In Exhibit "A" under the heading, Description of the Work, item No. 2 is revised to read as follows:

"2. Pumps and pump column installation.

Install a twelve inch steel water column from the new 2005 level to the 1630 level. From the 1630 level to the 800 (drainage tunnel) level, install a ten inch steel water column; install two 350 HP pumps on the 1630 level; and install two 450 HP submersible pumps on the 2005 level."

2. In Exhibit "A" under the heading, Estimated Costs of the Project, Category (4) Operating Equipment is revised to read as follows:

"Category (4) Operating Equipment

(a) and (b) Rental and purchases		None
(c) Depreciation		Per Month
Pumping	Value	
Power cable, 1,310 feet, 5,000 v. armored cable, @ $4.25/ft.	$ 4,050.00	$ 67.50
2 4-GT, IR 350 HP pumps, 9-1/2- inch impeller, switches and controls	17,500.00	291.67
2 BJ, 16-inch 2CXH 5 stage, 450 HP submersible pumps with controls	27,300.00	455.00

Long
Dodger
App'd. Fl. Off.
Grievel
Chambers
Martin

Drifting and Crosscutting

1 Gantry-type Jumbo complete with 6 drills	$15,000.00	$250.00
1 - 630 Eimco loader	10,100.00	168.33
1 - 5 car "train car loader"	19,000.00	316.67
1 charging panel	740.00	12.33
2 4-ton, 50-cell motor batteries	6,500.00	108.33
6,000 feet of #1-0 600 v. power cable	7,500.00	125.00
1 set 100 KVA transformer (used) 2300-440 volts	1,800.00	30.00
5-25 HP fans (or equivalent)	3,500.00	58.33

Drilling, Long Hole

2 long-hole machines complete	$ 4,800.00	$ 80.00"

The total depreciation allowance for any one month shall not exceed $1,590.00 nor the total depreciation allowance for the duration of the contract shall not exceed $47,700.00.

This amendment shall not be construed to increase the estimated total cost of the project, the aggregate amount which the Government may be required to contribute, nor the amount of any item designated as maximum.

Executed in quintuplicate the day and year first above written.

THE UNITED STATES OF AMERICA

NEW PARK MINING COMPANY

By Robert Norton

Title Vice President

By Frank E. Johnson

ACTING Director, Office of Minerals Exploration

Government's copy

MF-200
(Revised June 1954)

Docket No. DMEA 4981

Commodity lead, zinc, copper

Contract No. Idm-E 1218

UNITED STATES OF AMERICA
DEPARTMENT OF THE INTERIOR
DEFENSE MINERALS EXPLORATION ADMINISTRATION

EXPLORATION PROJECT CONTRACT[1]

It is agreed this 23 JUN 1958 day of ....., 195...., between the United States of America, acting through the Department of the Interior, Defense Minerals Exploration Administration, hereinafter called the "Government," and [2] New Park Mining Company, a Nevada corporation,

904-(8/15/61 letter)

whose mailing address is 907 Walker Bank Building
Salt Lake City 11, Utah,

hereinafter called the "Operator," as follows:

ARTICLE 1. *This contract* is entered into under the authority of the Defense Production Act of 1950, as amended. It consists of this form (MF-200), the attached Exhibit "A," Annex I, and three maps

The Operator shall not transfer or assign this contract or any right thereunder without the written consent of the Government.

ARTICLE 2. *Operator's property rights.*—(a) The land which is the subject of this contract (hereinafter called "the land") is in the State of Utah, County of Wasatch, and is described in Annex I.[3]

(b) The Operator represents and undertakes that:

(1) The Operator is the [4] See Annex I of [5] See Annex I in the land, in possession and entitled to possession for all of the purposes of this contract, under and by virtue of a [6] See Annex I, [7] ....recorded in Book ....., page ....., official records of said County; and

(2) The Operator's right, title, or interest (whether as owner, lessee, or otherwise) is subject only to the following claims, liens, or encumbrances: Interests of lessor

(c) The Subordination Agreement of the holder of any claim, lien, or encumbrance listed above, and (if the Operator does not hold the legal title) the Consent to Lien of any holder of the legal title

[1] If sufficient space is not provided in any blank, use an extra sheet of paper and refer to it in the blank.
[2] Insert name, and if an organization, its nature (corporation and place of incorporation, partnership with names of partners, etc.).
[3] State on a separate sheet marked "Annex I" the legal description or enough to identify the property, particularly excluding any areas from which the production is not to be subject to the Government's percentage royalty.
[4] Insert "owner," "lessee," "contract purchaser," "locator," etc.
[5] Insert "the entire interest," "the mineral rights," "an undivided one-third," etc.
[6] Insert "deed," "lease," "contract," "location notice," "patent," etc.
[7] If not recorded, so indicate by inserting "un."

of the land (lessor, seller, optionor, etc.), are attached, as follows: Consent to Lien and Subordination Agreement of U. S. Smelting, Refining and Mining Co. for leased claims.

(d) The Operator shall preserve and maintain his right, title, and interest in the land and his right to the possession thereof for the purposes of this contract, and shall devote the land and all existing improvements, facilities, buildings, installations, and appurtenances to the purposes of this contract. Until the lapse of the time within which the Government may make a certification of discovery or development without any such certification having been made, and after any such certification has been made, the Operator shall neither transfer, convey, nor surrender the land nor any right, title, or interest therein, nor permit nor suffer any claim, lien, or encumbrance thereon, without expressly referring to and providing in the instrument of conveyance, lien, or encumbrance for the preservation of the Government's right to a percentage royalty on production and lien for the payment thereof. If the Government makes no certification of discovery or development within the time limited in Article 8, it shall thereafter have no claim against the land or any production therefrom except for any production referred to in Article 8(b)(1).

ARTICLE 3. *The exploration project.*—The project is a search for indicated or undeveloped deposits of lead, zinc and copper. The work to be performed is described in Exhibit "A." The Operator on or before July 1, 1958 shall commence the work, and on or before November 1, 1961 (unless the Operator's obligation to prosecute the work is terminated—see Article 10) shall ~~either~~ have completed the work ~~or shall have incurred allowable costs (see Article 6) in a sum not less than the estimated total allowable cost set forth in Exhibit "A"~~ See Annex II

ARTICLE 4. *Performance of the work.*—(a) *Operator's responsibility.*—The work shall be performed with reasonable diligence, efficiently, expertly, in a workmanlike manner, in accordance with good mining standards and State regulations for health and safety and for liability insurance covering employment; and with suitable and adequate equipment, facilities, materials, supplies, and labor, to bring it to completion within the time fixed.

(b) *Independent contracts.*—To the extent that the allowable costs are estimated in Exhibit "A" with express reference to performance by independent contractors on a unit-price basis (such as per foot of drilling, per foot of drifting, per hour of bulldozer operations), the work may be so performed; but if the reference in Exhibit "A" to any such independent contract requires the Government's approval thereof, payments under such contract will not be allowable costs unless the Government gives its written approval of the contract. Any such independent contract shall refer to some specific and identifiable part of the work, and shall be subject to all of the pertinent terms and conditions of this exploration contract; but the Government shall not be considered a party thereto, and its rights under this contract, including the right to terminate its contributions, shall not be affected thereby. Regardless of the provisions of any such independent contract and regardless of the Government's approval thereof, the Government will participate in payments to the independent contractor only on account of work performed in accordance with the provisions of this exploration project contract, and only to the extent that the Government deems the unit prices for the work under the independent contract to be reasonable.

(c) *Government may inspect.*—The Operator shall consult with and inform the Government on all phases of the work as it progresses. The Government may enter at all reasonable times to inspect the work under the contract, and also after a certification of discovery or development to inspect production operations and underground workings. The operator shall provide the Government with all reasonable means of access for such inspections.

ARTICLE 5. *Contribution by the Government.*—The estimated total allowable cost of the project, set forth in Exhibit "A," is the sum of $ 564,880.00. The Government shall contribute 50 percent of the allowable costs as they are incurred in a total sum not in excess of $ 282,440.00: *Provided,* That until the Operator has rendered to the Government his final report, and any final auditing required by the Government has been made, and a final settlement of the contract has been made, the Government may withhold from the last

voucher or vouchers such sums as it sees fit not in excess of 10 percent of the estimated total cost of the work or not in excess of the amount of the Government's contribution to the cost of property which is or may become subject to disposal as provided in Article 9(c), whichever is greater. The Government will make its contribution on the basis of the monthly vouchers referred to in Article 7(b), but all payments by the Government are provisional only, subject to audit, until the account between the Operator and the Government is finally audited and settled. "Costs incurred" mean costs that have been paid or have become due and payable, or that in the opinion of the Government have become an obligation. The Government may make payments directly to independent contractors and suppliers for the account of the Operator rather than to the Operator.

ARTICLE 6. *Estimated costs.*—(a) *Categories of costs.*—The allowable costs of the work to which the Government shall contribute are limited to those that are direct, reasonable, necessary, and that are estimated in Exhibit "A" by categories as specified in this article. If any category or subcategory is omitted from the estimate of costs, or if the word "none" is annexed to the listing thereof, costs under such category or subcategory are not allowable. Any excess over any estimate which is indicated as the maximum of any category, subcategory, or item, either as to requirement or related cost, and any excess over the estimated total allowable cost of the work, shall not be allowable. Any excess over the estimate of any category, subcategory, or item, either as to requirement or related cost, not indicated as a maximum shall be allowable within the limit of the estimated total allowable cost of the work. To the extent that excesses over maximums other than the estimated total allowable cost of the work may be necessary for the performance of the work, the Operator shall incur such excesses for his own account without contribution by the Government; but except for any such necessary excesses in categories, subcategories, or items thereunder the Operator is not obligated to incur more than his agreed percentage of the estimated, total allowable cost of the work. **See Annex II.**

To the extent specified in this article or in Exhibit "A" the following categories, subcategories, and elements thereof are maximums; but if not so specified either here or in Exhibit "A" they are not maximums, and may be exceeded within the limit of the estimated total allowable cost of the work:

CATEGORY (1)—INDEPENDENT CONTRACTS.—Work to be performed under independent contracts (see Article 4(b)). The estimated total amount of this category and the estimated cost of each unit of work for performance under an independent contract are maximums. **See Annex II**

CATEGORY (2)—PERSONAL SERVICES.

Subcategory (a)—Supervision.—All elements of this subcategory (number of supervisors, periods of employment, rates of pay, and total) are maximums.

Subcategory (b)—Technical services.—All elements of this subcategory (number of technicians, periods of employment, rates of pay, and total) are maximums.

Subcategory (c)—Labor.

CATEGORY (3)—OPERATING MATERIALS AND SUPPLIES.—Includes such items as drill bits and steel, explosives, fuel, pipe, power, small tools costing less than $50 each, timber, track.

CATEGORY (4)—OPERATING EQUIPMENT.

Subcategory (a)—Rental.—The number of each object to be rented [6 mine cars, 1 truck], the rate of rental [$100 per month, $5 per hour], and the total of this subcategory are maximums.

Subcategory (b)—Purchases.—The estimated total of this subcategory is a maximum.

Subcategory (c)—Depreciation.—All elements of this subcategory (time periods, rate of depreciation, and subcategory total) are maximums.

CATEGORY (5)—INITIAL REHABILITATION AND REPAIRS.—Estimates under this category include all requirements and related costs, such as labor, materials and supplies, and supervision at a rate not higher than provided for in Category (2), and shall not be duplicated under any other category. The estimated total of this category is a maximum.

Subcategory (a)—Initial rehabilitation and repairs of existing buildings, fixtures, and installations (exclusive of mine workings).—The estimated total of this subcategory is a maximum.

Subcategory (b)—Initial rehabilitation and repairs of operating equipment.—The estimated total of this subcategory is a maximum.

CATEGORY (6)—NEW BUILDINGS, FIXTURES, AND INSTALLATIONS (EXCLUSIVE OF MINE WORKINGS).—Estimates under this category include all requirements and related costs, such as labor, materials and supplies, and supervision at a rate not higher than provided for in Category (2), and shall not be duplicated under any other category. The estimated total of this category is a maximum.

CATEGORY (7)—MISCELLANEOUS.—Repairs and maintenance (other than initial) of operating equipment, analytical work, prints and other reproductions, accounting, Operator's share of payroll taxes, liability insurance covering employment, travel, communications, and any other items of requirement or cost that do not fall within any of the first 6 categories.

THE ESTIMATED TOTAL ALLOWABLE COST of the work is a maximum.

(b) *Nonallowable costs.*—The following costs are not allowable for contribution by the Government:

(1) *Costs of the land,* such as rental, depreciation, depletion, or other cost of acquiring, owning, or holding possession;

(2) *Indirect costs,* such as general overhead, corporate management, interest, taxes (other than payroll and sales taxes), insurance (other than liability insurance covering employment), damages to persons, damages to property (other than necessary repairs or replacements of equipment or other property used in the work);

(3) *Previous work* performed or costs incurred before the date of this contract; and

(4) *Deferred payments.*—Any costs incurred by the Operator under any rental-purchase agreement, installment-purchase agreement, or any agreement for the purchase of goods under the provisions of which payment of the full purchase price is deferred more than 90 days from the delivery of the goods; unless the purchase agreement is approved by the Government in writing.

(c) *Reductions in costs.*—The Operator shall account for and give the Government credit for any incidental benefits, credits, or money received in the ordinary course of business in prosecuting the work (as by salvage or sale of materials or equipment, furnishing of room or board, furnishing of power or services to third persons, rebates or discounts on purchases, etc.), in the same ratio in which the Government contributes to costs; and such amounts shall be treated as a reduction in costs incurred so that they are available for use within the limit of the original estimated total cost. This provision does not apply to receipts from production which are subject to the Government's percentage royalty under the provisions of Article 18. See Annex II.

ARTICLE 7. *Reports, accounts, audits.*—(a) *Operator's records.*—The Operator shall keep suitable records and accounts of the work performed and of any production in which the Government may have an interest; and shall preserve those with respect to work performed for at least three years after final payment by the Government, and those with respect to production for at least three years after any obligation to pay royalties to the Government has terminated. The Government may inspect and audit said records and accounts at any time, either by itself or by a certified public accountant. If the Government elects to audit said records and accounts relating to the exploration work by certified public accountant, it may do so as a cost of the work to which the Operator shall contribute. The Comptroller General of the United States or his representative, until the expiration of said three-year periods, shall have access to and the right to examine any pertinent books, documents, papers, and records of the Operator. All of the Operator's vouchers and records and accounts relating thereto and the Government's payments thereof remain subject to adjustment until final audit by the Government. If work under this contract is carried on in conjunction with any other operations, or if labor, supervision, services, materials, supplies, equipment, facilities, or other requirements for carrying on the work are also used in connection with other operations, the costs shall be segregated and accounted for on a basis and by methods and accounts that are satisfactory to and approved by the Government.

(b) *Progress reports and vouchers.*—The Operator shall provide the Government with five copies of monthly progress reports in three sections as follows: (1) Operator's Monthly Report and Voucher showing detailed costs incurred during the reporting period; (2) Operator's Unit Cost and Progress Report showing the various types of work performed during the reporting period and costs incurred for each type of work; and (3) a Narrative Report of the work performed during the reporting period including adequate engineering-geological maps or sketches, drill hole logs and locations, and assay reports on samples taken concurrently with advance in mineralized ground. (Forms for reporting under (1) and (2) above will be provided by the Government.)

(c) *Final report.*—Upon completion of the work or termination of the Government's obligation to contribute to costs, the Operator shall furnish the Government with five copies of a final report (in addition to the final progress report and voucher). This final report shall include a geological and engineering evaluation of the results of the work performed under the contract with an estimate of the ore reserves resulting from such work, complete assay data, adequate geological and engineering maps or sketches, and a summary of the work performed and related costs incurred.

(d) *Report of sales.*—The Operator shall provide the Government with suitable accounting and documentary evidence covering all production to which the Government's percentage royalty relates, such as copies of smelter or concentrator settlement sheets, and certified accounts of production and sale or other disposition of production.

(e) *Compliance with requirements.*—If in the opinion of the Government any of the Operator's reports, records, or accounts are insufficient or incomplete, or if the Operator fails to make them, the Government may procure the making or completion of such with suitable attachments as an expense of the work to which the Operator shall contribute. The Government may withhold approval and payment of any vouchers relating to insufficient or incomplete reports, records, or accounts.

ARTICLE 8. *Repayment by Operator.*—(a) *Certification.*—If the Government considers that a discovery or development from which production may be made has resulted from the work, the Government, at any time not later than six months after a sufficient final report and final account (see Article 7) has been rendered, may so certify in writing to the Operator. Such certification shall describe broadly or indicate the nature of the discovery or development.

(b) *Royalty on production.*—The Operator, as principal if the Operator is the producer, or as surety if the Operator is not the producer, shall pay to the Government a royalty on all minerals mined or produced from the land, as follows: (1) regardless of any certification of discovery or development, from the date of the contract until the lapse of the time within which the Government may make such certification, or until the total net amount contributed by the Government without interest is fully repaid, whichever occurs first; or (2) if the Government makes a certification of discovery or development, within a period of ten years from the date of the contract, or until the total net amount contributed by the Government without interest is fully repaid, whichever occurs first. **See Annex II.**

(c) *Basis for computation.*—The Government's royalty shall be a percentage of the gross proceeds (including any bonuses, premiums, allowances, or other benefits) from the production sold, in the form sold (ore, concentrates, metal, or equivalent), at the point of delivery (the f. o. b. point); *except,* that charges of *the buyer* arising in the regular course of business, and shown as deductions on the buyer's settlement sheets, on account of the cost of treatment processes performed by *the buyer,* sampling and assaying to determine the value of the production sold, and freight paid by *the buyer* to a carrier (not the Operator), shall be allowed as deductions in arriving at the "gross proceeds" as that term is used herein. Any costs of treatment processes, sampling or assaying, or transportation, performed or paid by the Operator or by anyone other than the buyer, are not deductible in arriving at the "gross proceeds" as that term is here used. The term "treatment processes," as here used, means those processes (such as milling, concentrating, smelting, refining, or equivalent) applied to the crude ore or other production after it is extracted from the ground, to put it into a commercially marketable form; excluding fabricating or manufacturing.

(d) *Unsold production.*—If any production (ore, concentrates, metal, or equivalent), after the lapse of six months from the date the ore was extracted from the ground, remains neither sold nor used by the Operator in integrated manufacturing or fabricating operations (for instance, if it is stockpiled), the Government, at its option, as long as it so remains, may require the computation and payment of its royalty on the value of such production in the form (ore, concentrates, metal, or equivalent) it is in when the Government elects to require computation and payment. If any production is used by the Operator in integrated manufacturing or fabricating operations before the Government makes its election, the Government's royalty on such production shall be computed on the value therof in the form in which and at the time when it is so used. "Value" as here used means what is or would be gross income from mining operations for percentage depletion purposes in Federal income tax determination, or the market value, whichever is greater.

(e) *Percentages of royalty.*—The percentages of the Government's royalty shall be as follows:

One and one-half (1½) percent of amounts ("gross proceeds" or "value") not in excess of eight dollars ($8.00) per ton of production in the form in which sold, held, or used, plus one-half (½)

percent for each additional full fifty cents ($0.50) by which such amounts exceed eight dollars ($8.00) per ton, but not in excess of five (5) percent of such amounts.

(For instance: the royalty on an amount of five dollars ($5.00) per ton would be one and one-half (1½) percent; on an amount of ten dollars ($10.00) per ton, three and one-half (3½) percent.)

(f) *Time for computation and payment.*—The Government's royalty shall be computed and paid currently upon each lot sold, held, or used in integrated operations, as the case may be, as above provided in this article.

(g) *Lien for payment.*—To secure the payment of its percentage royalty, there is hereby granted to the Government a lien upon the land or the Operator's interest in the land and upon any production of minerals therefrom, until the royalty claim is extinguished by lapse of time or is fully paid.

(h) *Notice to purchasers.*—The Operator shall give notice of the Government's claim for royalty to any purchaser of the production, and shall authorize and direct such purchaser to pay the royalty directly to the Government and to furnish the Government with copies of the settlement sheets. If the records of any production and sales or other disposition of production, whether the production is by the Operator or by others, are not made available to the Government, the amount of the royalty may be estimated by the Administrator, Defense Minerals Exploration Administration, or his successor, and his estimate thereof shall be final and binding upon the Operator.

(i) *No obligation to produce.*—Nothing in this contract is to be construed as imposing any obligation on the Operator or the Operator's successor in interest to engage in any production operations.

(j) *Government not obligated to buy.*—Nothing in this contract shall be construed as imposing any obligation on the Government to purchase any minerals mined or produced from the land.

ARTICLE 9. *Interests in purchased property.*—(a) *Title and ownership.*—All costs under this contract shall be incurred by the Operator in the Operator's own name and for the Operator's own account; but any property acquired to the cost of which the Government contributes shall belong to the Operator and the Government jointly in proportion to their respective contributions, although title thereto shall be taken in the name of the Operator.

(b) *Preservation of property.*—Until the final disposal of any property in which the Government has an interest the Operator shall preserve and protect same for the best interest of the Government, any reasonable and necessary costs thereof to be treated as an allowable cost of the project. After the completion of the work or termination of the Government's obligation to contribute, or when such property is not in use for or needed for the work, the Operator shall neither use it without the written consent of the Government nor without paying a reasonable rental to be fixed by the Government for its interest.

(c) *Disposal of property.*—Upon the completion of the work or termination of the Government's obligation to contribute to costs, or when the property is no longer needed for the work, the Operator shall promptly dispose of salable or salvageable property in which the Government has an interest for the joint account of the Government and the Operator, either by return to the vendor, by sale to others, or purchase by the Operator or the Government at a price at least as high as could be obtained from others, unless the Government in writing waives its interest in any such property. Without advance approval of the sales price by the Government the Operator shall not sell at any price any item of property the cost of which was more than $500, and shall not sell at less than 25 percent of the purchase price any item of property which cost $500 or less. The Government, in lieu of approving the sales price for any such item, may itself purchase the item at the best price which the Operator is able to obtain or himself cares to give. Property remaining upon any termination of the work shall be considered in groups or categories (such as drill steel, or explosives, or pipe, or rails), and if the original cost of the remaining unexpended portion of any such group or category is less than $50, the Government waives its interest therein. If necessary to accomplish the disposal of any item the Operator shall dismantle and sever it from the land, the cost thereof to be treated as a cost of the project.

(d) *Default of the Operator re disposal.*—If within 90 days after the completion of the work or termination of the Government's obligation to contribute to costs, or after the property is no longer needed for the work, or after such further time as the Government may in writing allow, the Operator has failed to sell or otherwise liquidate or dispose of any property in which the Government has an interest, the Government, at any time prior to final settlement under the contract, may pursue one of the following two courses: (1) the Government, by written notice to the Operator, may place upon such property what in its opinion is a fair valuation thereof, not in excess of the cost less 1.66 percent per month from the

Executed in sextuplicate the day and year first above written.

Phelps
Hoffman
Sinnott
App'd. Sol. Off.
Chambers
Selbriggs
Johnson

THE UNITED STATES OF AMERICA

By C. Mitterdorf
Administrator, Defense Minerals
Exploration Administration

NEW PARK MINING COMPANY
(Operator)

By R. H. Cramer

Title President

I, Robert H. Cramer, certify that I am the secretary of the corporation named as Operator herein; that W. H. H. Cramer who signed this contract on behalf of the Operator, was then President of said corporation; that said contract was duly signed for and in behalf of said corporation by authority of its governing body, and is within the scope of its corporate powers.

Robert H. Cramer

[CORPORATE SEAL]

U. S. GOVERNMENT PRINTING OFFICE 16—70017-1

35485

date such property was purchased under this contract to the termination of said 90-day period; and such property shall thereupon be considered and accounted for as having been purchased by the Operator at the valuation so fixed by the Government; or (2) the Government may enter and take possession of such property wherever it may be found, and remove and dispose of it for the joint account of the parties.

ARTICLE 10. *Termination of the Government's obligations.*—(a) If in the opinion of the Government operations at any time have failed to achieve anticipated results that indicate the probability of making a worthwhile discovery, and in the opinion of the Government further operations are not justified, the Government may give the Operator written notice thereof, and thereupon: (1) the Government shall be free of all obligation to contribute to costs not then incurred other than such as may be allowable under the provisions of the contract as necessary and incidental to winding up, reporting, and accounting; and (2) the Operator shall be free of all obligation to prosecute the work other than such as may be necessary and incidental to winding up, reporting, and accounting.

(b) If in the opinion of the Government the Operator is in any manner in default under the terms of the contract, the Government may give the Operator written notice of such default with a specification of reasonable time within which the default must be cured; and if the Operator fails to cure such default as required, thereupon: (1) the Government shall be relieved of all obligation to contribute to costs not incurred when the notice was given, other than such as may be allowable by the provisions of the contract as necessary and incidental to winding up, reporting, and accounting; and (2) the Operator shall be free of all obligation to prosecute the work other than such as may be necessary and incidental to winding up, reporting, and accounting. The remedy provided for the Government in this paragraph "(b)" is in addition to any other remedy provided in this contract, and in addition to any other remedy the law may provide for breach of contract.

(c) The giving of any notice by the Government under the provisions of this Article 10 shall not affect the Government's rights as provided for in the contract with respect to a percentage royalty, and such rights shall be fully preserved.

ARTICLE 11. *Notices to be given by the Government* may be delivered to the Operator, or may be sent by registered mail addressed to the Operator at his mailing address stated in this contract. If mailed, notices are deemed to have been delivered five days after the date of mailing.

ARTICLE 12. *Officials not to benefit.*—No member of or delegate to Congress or resident commissioner shall be admitted to any share or part of this contract or to any benefit that may arise therefrom; but this provision shall not be construed to extend to this contract if made with a corporation for its general benefit.

ARTICLE 13. *Changes and added provisions.*—

See Annex II.

MF-205
(Combines and supercedes MF-201 and MF-203)
June 1956

For Government's Use Only
EXPLORATION PROJECT CONTRACT
Operator
Docket No. DMEA-
Contract No. Idm-E 1218
Contract Date ~~23 JUN 1958~~

RECEIVED JUN 19 1958

CONSENT TO LIEN
and
SUBORDINATION AGREEMENT 1/

To the United States of America:

Referring to that certain land in the County~~y~~ies of Summit and Wasatch, State of Utah, described as follows: 2/

See Exhibit 1

which is the subject of a proposed exploration project contract, hereinafter called the "contract," with the United States of America, hereinafter called the "Government;" in consideration of the contract and as an inducement to the Government to enter into it, the undersigned hereby--

1. Undertakes and agrees that property in which the Government may acquire an interest or equity under the contract may be dismantled, severed from the land, and removed, as may be provided in the contract; and the Government's interest and equity in such property shall be prior and superior to any adverse right or claim of the undersigned;

2. Grants to the Government a lien upon all of the undersigned's right, title, and interest in the land and upon any production of minerals therefrom, to secure the payment to the Government of a percentage royalty on production as may be provided for by the Contract;

3. Subordinates the undersigned's right, title, claim, or interest in or against the land and in any production therefrom to the rights of the Government under the contract with respect to royalty on production and liens to secure same;

4. Represents and undertakes that ~~there is no~~ it does not know of any claim, lien, or encumbrance upon the undersigned's right, title, claim, or interest in or against the land other than the following: (If "none" insert the word "none." Do not leave lines blank.)

An equitable claim of New Park Mining Company in 0.90 acres in the easterly portion of said Martha claim and the paramount title of the United States in the Link, Martha and Marne unpatented claims.

1/ Mining or production from the land is not required, and in the absence of production there is no obligation to pay royalty to the Government.

2/ Either (a) insert the legal description of the land, or (b) strike out the words "as follows" and insert "in a lease [or contract, deed, or other document] dated _____, and recorded in Book _____, Page _____, official records of said county." If (b) is used, the book and page of recordation cannot be dispensed with. If the space provided is insufficient, use an Annex, and refer to the Annex in the space.

5. Undertakes and agrees (a) neither to commit any act nor assert any claim in conflict with the provisions of this Agreement; and (b) to give advance notice of the Government's rights under this Agreement to any subsequent transferee, mortgagee, encumbrancer, or lessee of any of the undersigned's right, title, claim, or interest in or against the land, or any production therefrom furnishing the Government with two copies of such notice; and

6. Consents to all amendments (including an agreement of termination) and assignments of the contract without notice thereof, and undertakes and agrees that this Agreement shall extend and apply thereto.

7. Added provision: None (State "None" or "See Annex No.____")

Dated this 13th day of June, 1958.

United States Smelting Refining and Mining Company	[Seal]	1019 Newhouse Building (P. O. Box 1980)	[Address]
	[Seal]	Salt Lake City 10, Utah	[Address]
By C.G.Rice, Executive Vice President	[Seal]		[Address]
	[Seal]		[Address]
	[Seal]		[Address]
	[Seal]		[Address]

I, Francis Fiske certify that I am the Secretary (Secretary, etc.) of the corporation named herein; that C. G. Rice who signed this agreement was then Executive Vice President (President or Vice-President, etc.) of said corporation; that said agreement was duly signed for and in behalf of said corporation by authority of its governing body, and was within the scope of its corporate powers.

Francis Fiske
[Corporate Seal]

OFFICIAL FILE COPY
DMEA
RECEIVED JUN 19 1958
DATE CODE

EXHIBIT I

Those certain lode mining claims situate in Section 34, Township 2 South, Range 4 East, Salt Lake Meridian, in Blue Ledge Mining District, in Wasatch County, State of Utah, particularly described as follows:

All of the following patented lode mining claims:

Dew Drop, Ethel, Hornet, Lookout Mountain, Lookout Mountain No. 2 all Mineral Survey No. 7130 and all patented under United States Patent Number 1174018, recorded in the records of Wasatch County in Book 11 at pages 213 and 214.

The described portions of the following patented lode mining claims:

Ben Butler, Mineral Survey No. 6642.

All that part of said Ben Butler lode mining claim lying West of the West end line of the Success No. 1 and Phyllis lode mining claims, Mineral Survey No. 6810, and West of a line projected North from the northwest corner (Corner No. 1) of said Success No. 1 lode.

Sitka, Mineral Survey No. 7126.

All that part of said Sitka lode mining claim lying South of a line drawn from the southeast corner of the San Diego lode mining claim, Lot No. 207, to the southwest corner of Oom Paul lode mining claim, Mineral Survey No. 5027.

A two-thirds undivided interest in and to that part of said Sitka lode mining claim lying North of the above described line.

All of the Martha unpatented lode mining claim, the Amended Location Notice of which is recorded in the records of Wasatch County in Book 8 at page 341.

All of the following unpatented lode mining claims situate in Sections 27 and 34, Township 2 South, Range 4 East, Salt Lake Meridian, in Uintah and Blue Ledge Mining Districts, in Summit and Wasatch Counties, State of Utah.

	Location Notice or Amended Location Notice Recorded in Records of			
	Summit County		Wasatch County	
Claim	Book	Page	Book	Page
Link	5	10	8	366
Marne			6	235

- - - - - -

June 11, 1958

EXPLORATION PROJECT CONTRACT
NEW PARK MINING COMPANY
DOCKET NO. DMEA-4981

ANNEX I

The land referred to in Article 2 of the contract consists of all or portions of the patented and unpatented claims listed below as delineated hereinafter in this Annex I:

Patented lode-mining claims owned by New Park Mining Co.

	Mineral Survey No.		Mineral Survey No.
Miriam No. 1	206	Sofia	99
Miriam No. 2	206	Mazzeppa	169
Fisher No. 1	6980	Rising Star	170
*Sitka (1/3 int.)	7126	Estella	167
W. H. C.	200	Success No. 1	6810
Ammie	200	Crescent	5087
Sun Set No. 2	168	Phyllis	6810
Glencoe	98	Mary Jane	6810
North Side No. 3	100		

Patented lode-mining claims leased from U. S. Smelting, Refining and Mining Co.

	Mineral Survey No.
Lookout Mountain	7130
Lookout Mountain No. 2	7130
Ben Butler	6642
Dew Drop	7130
Ethel	7130
Hornet	7130
Sitka	7126

*Jointly owned by New Park Mining Company and U. S. Smelting, Refining and Mining Company. New Park Mining Company has a lease for U. S. Smelting, Refining and Mining Company's interest.

Unpatented lode-mining claims leased from U. S. Smelting, Refining & Mining Co.

Patents not completed

	Mineral Survey No.
Link	7130
Marne	7130
*Martha	7130

Land Excluded from the Contract

All of the area covered by the claims listed herein lying above the 1880 level and east of a vertical plane at approximately 2,120 feet S. 65 degrees W. of the Mayflower shaft, the plane being more particularly described as follows:

> A vertical plane striking N. 25 degrees W. through mine survey coordinate point 7570 North 7400 East, which bears S. 65 degrees W., 325.0 feet from survey station 5539 on the 1630 west level. The vertical plane is approximately indicated on the attached map entitled "Figure 10, Longitudinal Section Along the Mayflower - Pearl Fissure System ...".

excepting new veins and extensions thereof which may be discovered or in part developed by the work done under this contract.

- - - - - - - - - - - - - - - - -

The land included in the contract is shown on the attached map entitled "New Park Mining Company, Property Map."

EXPLORATION PROJECT CONTRACT
NEW PARK MINING COMPANY
DOCKET NO. DMEA-4981

ANNEX II

Article 13. Changes and added provisions.-

(a) In Article 8, the period "fifteen years" is substituted for the period "ten years".

(b) A special "Agreement Concerning Royalty" is added as follows:

"Notwithstanding the certification provisions of Article 8, and with no further action required on the part of the Government, the Operator, as principal if the Operator is the producer or as a surety if the Operator is not the producer, shall pay to the Government a royalty on any of its production, regardless of where it comes from that is transported through any new workings to the cost of which the Government has contributed, or any portion of said workings, for the same period as is described in Article 8(b)(2) of the contract and pursuant to the terms of Article 8(c) et seq. However in no event shall more than one royalty be due on or paid on the same production.

"In the event that production from outside the boundaries of the land described in Article 2 is transported through the workings described above, and neither the Operator nor any subsidiary or affiliate thereof has any interest in said production, the Government shall be paid by the Operator the fixed rate of 5 per cent of the total transportation charges received by the Operator,"

(c) Notwithstanding any other provision of the contract, the allowable unit cost of a work item (drilling and the asterisked items in Exhibit "A") is the average unit cost per foot computed on the basis of all the actual allowable costs of said work item in-

curred by the Operator: Provided, That the Government will not contribute to any portion of the average unit cost of a work item that exceeds the estimated (maximum) unit cost of said item set forth in Exhibit "A"; and: Provided further, That the Government, during the performance of the work, may contribute to actual costs of the work item to the extent that in its opinion the maximum unit cost will not be exceeded upon the completion or termination of that work item.

(d) In the last sentence of Article 6(a), the words "Article 8" are substituted for the words "Article 9".

(e) In Article 3, the words following the reference to Article 10 are deleted, and the following words are substituted: "Shall have completed the work".

EXPLORATION PROJECT CONTRACT
NEW PARK MINING COMPANY
DOCKET NO. DMEA-4981

EXHIBIT "A"

Description of the Work

The purpose of the project is to explore, by means of drifting, crosscutting and diamond drilling, for ores of lead and zinc. The proposed work is partly shown on the attached map entitled "Figure 8, Geologic Map of the 2005 Level Showing Recommended Exploration, Mayflower Mine...".

The project consists of the following items of work.

Item Nos.

1. Water disposal facilities.

   Install 7,140 feet of sixteen inch transite pipe in the Mayflower 800 level.

2. Pumps and pump column installation.

   Install ten inch steel water column from the new 2005 level to the 800 (drainage tunnel) level; install two 1000 gallon capacity pumps on the 1630 level; and install two 1000 gallon capacity submersible pumps on the 2005 level.

3. Drifting and crosscutting.

   Drift and crosscut westerly on the 2005 level an estimated 6,000 feet, and crosscut approximately 2,600 feet additional in favorable mineralized areas, not to exceed an aggregate of 8,600 feet of drifts and crosscuts. The drifts and crosscuts initially shall be approximately 7 feet by 10 feet in rock section, but periodically the bottom two feet may be back filled in connection with construction of a drainage ditch. Drifts and crosscuts shall be timbered as necessary using standard drift sets.

Item Nos.

4. Ventilation Raises.

Two timbered ventilation raises, each approximately 125 feet long, shall be driven from the 2005 to the 1800 level at proper locations. Raises shall be approximately 6 by 10 feet in the clear of timber.

5. Water Doors.

Two steel and concrete water doors shall be installed on the 2005 level at proper locations to protect against unforeseen heavy flooding.

6. Longhole Percussion Drilling.

An estimated 20,000 feet of long hole drilling shall be performed to probe the walls of the cross-cuts and drifts. Fan interval not less than 300 feet.

7. Diamond Drilling

One diamond drill hole shall be drilled an estimated length of 1,000 feet from a point near the westerly end of the 801-A drift, to probe for structure. Then, an estimated total of ten thousand feet of diamond drilling shall be performed along the course of the new 2005 level, to probe for ore occurrences. Diamond drilling shall be done with AX size, or larger, coring bits. The locations, directions, inclinations and depths of the holes are subject to prior Government approval. Intersections not closer than 200 feet.

Sludge samples shall be taken as the diamond drilling progresses and, when core recovery in significantly mineralized areas is less than seventy percent, the equivalent sludges shall be sampled and these samples assayed as described below.

All significantly mineralized areas encountered in drifting, crosscutting, long hole drilling and diamond drilling shall be sampled and the samples assayed for lead,

zinc, copper, gold and silver, as appropriate. It is estimated that 500 such samples will be required.

The Government will not participate in the cost of work performed closer than one hundred feet to property boundaries.

Estimated Costs of the Project

(An asterisk indicates a maximum in addition to the maximums set forth in contract form.)

The costs of completed work items are listed below in terms of maximum (asterisked) unit costs. The Government will contribute to the actual costs scheduled below that do not exceed the maximum unit costs computed as set forth in paragraph (g) of Article 13 (Annex II).

Timbered raises, $48.00* per linear foot.
Longhole drilling, $1.00* per linear foot.
Drifting and crosscutting, $45.00* per linear foot.
Timbering of drifts and crosscuts, $11.00* per linear foot.

Category (1) Independent Contracts		
11,000 feet diamond drilling @$6.35/ft. (Includes all costs of drilling whatsoever except compressed air and water)		$ 69,850.00
Category (2) Personal Services		
(a) and (b) Supervision and technical services 40 months, @$650.00 monthly, (estimated number of supervisors and technicians is waived)	$ 26,000.00	
(c) Labor	191,230.00	$217,230.00
Category (3) Operating Materials and Supplies		$192,614.00

The Government's contribution to the cost of the following materials and supplies may not exceed one half

of fifty percent of the actual cost of such items, and the Government will not acquire any salvage interest in materials and supplies used in connection with the project work. The Government will not contribute to the costs of any materials and supplies acquired by the Operator which are not used for the project work.

1. Sixteen inch transite pipe and fittings.
2. Vent lines and fittings.
3. Compressed air lines and fittings.
4. Water lines and fittings.
5. Track and fittings.
6. Steel pump column, valves and fittings.

Category (4) Operating Equipment

(a) and (b) Rental and purchases None

(c) Depreciation, 60 month life

Pumping	Value
Power cable, 1,310 ft., 5,000 v. armored cable, @$4.25/ft.	$ 5,567.50
2 4-GT, IR 350 H.P. pumps @$7,777.62 each, 9-1/2-inch impeller	15,555.24
2 BJ, 12-inch 2CKH 9 stage, 175 H.P. submersible pumps @$8,121.00/each	16,240.00
Switches, controls, and mountings for pumps @$3,120.00/each	$ 6,240.00
	$ 43,604.74

Drifting and Crosscutting

1 Jumbo G.D. rail model J-2P	$ 6,465.00
2 G.D. Cf - 93 P, drifting drills, complete	3,840.00
1 G.D. Cf - 93 P, drifting drill, bare	1,465.00
1 21 - C Eimco loader	4,720.00
1 Canton car transfer	1,200.00
10 50-cubic-foot mine cars @$920.00 each	9,200.00
1 charging panel	740.00
2 4-ton, 50-cell motor batteries	6,500.00
Power cable, ventilation #2 rubber, 3 conductor, @$.78/ft.	6,240.00
Power cable, blasting and blowing #4, 3 conductor @ $0.39/ft.	3,315.00
1 set 100 KVA transformer (used) 2300-440 volts	2,400.00
5-25-H.P. fans @$560.00 each	2,800.00
	$ 48,885.00

Drilling, Long Hole

2 long-hole machines, complete	2,930.00
Total machinery	$ 95,419.74

$1590.00* monthly, 30 months $ 47,700.00*

Category (5) Initial Rehabilitation and Repairs

(Exclusive of mine workings) None

Category (6) New Buildings, Fixtures and Installations

(Exclusive of mine workings) None

Category (7) Miscellaneous

Fringe benefits, 11.5%; (workmen's compensation, F.I.C.A., Federal and State unemployment, Group Insurance)	$ 24,986.00	
Assaying, (500 samples, 5 determinations each), 2,500 determinations @$1.00/each	2,500.00	
Accounting, 40 months @$250.00monthly	10,000.00	37,486.00
Estimated Total Cost of Project		$564,880.00
Government's participation 50%		$282,440.00

GENERAL STATEMENT

The New Park Mining Company of Salt Lake City, Utah, is presenting to the Defense Minerals Exploration Administration an application for aid in an exploration contract covering a project at its Mayflower Mine, Keetley, Utah, in the Park City Mining District.

The Company has operated in the District for 26 years producing substantial quantities of copper, lead and zinc. Mineral production at the Mayflower Mine has been from steeply dipping fissures in igneous rock until recent years. Present production now comes from bedded type ores in sedimentary rocks of Mississippian Age, opening entirely new geologic horizons to be explored. These mineral areas are being mined 800 to 1,000 feet below the Mayflower Tunnel, the main access to the property.

Previous exploration on the Mayflower Tunnel level and the Star of Utah Tunnel level (800 feet higher) indicates a mineralized fissure zone approximately 4,000 feet west of the Mayflower ore body. The general opinion of geologists studying this problem is that future exploration should be at elevations below the Mayflower Tunnel in the Mississippian sedimentary horizons.

This exploration project proposes shaft sinking in the vicinity of the present face of the Mayflower Tunnel (800 level) to establish and drive the 1,630 level for exploration of these fissure structures in the sedimentary rocks on the east limb, and near the axis, of the Park City anticline. This should make older sedimentary formations available for exploration at this level.

Detailed geologic and cost information is included as a supplement to Form MF-103. The estimated cost of the project is $719,566.69 and under present regulations this expense would be shared on an equal basis between DMEA and New Park Mining Company.

Form MF-103
Revised Oct. 1957

UNITED STATES
DEPARTMENT OF THE INTERIOR

Budget Bureau No. 42-R1035.3
Approval expires June 30, 1958

DEFENSE MINERALS EXPLORATION ADMINISTRATION

APPLICATION FOR AID IN AN EXPLORATION PROJECT

PURSUANT TO DMEA ORDER I, UNDER THE DEFENSE PRODUCTION ACT OF 1950, AS AMENDED

NAME OF APPLICANT (Full legal name and mailing address as it should appear on contract if one is executed)

NEW PARK MINING COMPANY
907 Walker Bank Building
Salt Lake City 11, Utah

APPLICANT NOT TO USE THIS BLOCK

Docket Number	DMEA-4981
Date Received	4-15-58
Government Participation %	
Region	III
Division Code	500

BUSINESS ORGANIZATION (Check one)

- Individual [ ]
- Corporation [X]
- Partnership [ ]
- Other (Specify) [ ]

State in which firm is organized: Nevada

LIST CORPORATE OFFICERS OR PARTNERS HERE, IF APPLICABLE

Name	Address	Title
W. H. H. Cranmer,	907 Walker Bank Bldg., SLC, Utah	Pres. & gen.mgr.
Clark L. Wilson,	" " " " " "	V-Pres.& Mgr.of Oper.
Robert L. Cranmer,	" " " " " "	Secretary
Raymond C. Wilson,	" " " " " "	Treasurer

Mineral(s) for which you wish to explore: copper-lead-zinc

Estimated Cost of Project: $ 719,566.69

LOCATION OF PROPERTY

Name	County	State
Mayflower Mine	Wasatch	Utah

GENERAL INSTRUCTIONS

Before filling out this application, please read DMEA Order-I, Revised, "Government Aid in Defense Exploration Projects." To assure prompt action, your application must provide all applicable material and information specified on the back of this application form. Avoid unnecessary correspondence and delays by submitting complete and accurate information. *Please submit four copies of this application and all accompanying papers* except as otherwise noted. Place your name and address on each sheet. Each item of information, maps, and reports required as a part of this application is described on the back of this form. Identify each attached statement by the item number to which it applies. If an item does not apply to your application, show the item number on your statement and after it write "not applicable." Maps or sketches should be used to supplement narrative descriptions of the property location and boundaries in item 1, existing mine workings and geology in item 2, and the proposed exploration project in item 4. When this information is not too complex, all of it may be shown on one map or sketch. All documents and other attachments submitted as a part of this application, except those in item 2(g) which you mark to be returned, become the property of the Government and will not be returned to the applicant. Send true copies, *not originals*, of leases, contracts, and other documents which are an essential part of your business records. *File this application with the Defense Minerals Exploration Administration, Department of the Interior, Washington 25, D. C., or with the nearest DMEA Field Office.*

CERTIFICATION

The undersigned, whether as an individual, corporate officer, partner, or otherwise, both in his own behalf and acting for the applicant, certifies that the information set forth in this form and accompanying papers is correct and complete, to the best of his knowledge and belief.

Apr. 7th 1958.
Dated

W. H. H. Cranmer
BY (Signature)

President
Title

A wilfully false statement or certification to any Department or Agency of the United States Government is a criminal offense. U. S. Code, Title 18, Sec. 1001.

INFORMATION REQUIRED WITH THIS APPLICATION

1. *Applicant's Property Rights:*

(a) State the legal description (section, township, and range; metes and bounds; patent number of claims) of the land upon which you wish to explore and all land adjacent to the proposed project area which you own or control. Describe any part of the project land or workings which should not be subject to Government lien for royalty payments. If the land consists of unpatented claims, state the book and page number for each recorded location notice, including amended locations, and the place where recorded (courthouse, recorder's office, county, and state).

(b) State all the names by which you know the property.

(c) State your interest in the land, whether owner, lessee, purchaser under contract, or otherwise. If you are not the owner, submit with this application one exact copy of the lease, contract, or other document (with address of owner) under which you control the property.

(d) Describe all liens, mortgages, or other encumbrances on the property.

2. *Physical Description:*

(a) Describe in detail and illustrate with maps or sketches all mining or exploration operations which you know have been or are being conducted upon the lands, including existing mine workings. Describe all production facilities.

(b) State your interest, if any, in operations stated in 2*(a)*.

(c) State, as far as you know, the past and current production, supporting your statement with copies of settlement sheets, mine records, or published data if available.

(d) Describe known ore reserves on the property giving quantities and grades and sampling methods used, supporting your statement with copies of assay certificates and assay maps if available.

(e) Describe by narrative and maps or sketches the geologic features of the property, including ore minerals, geologic formations if known, and type of deposit (vein, bedded, etc.).

(f) State your reasons for expecting to find ore, and if you have sampled the area you propose to explore, show where the samples were taken, describe sampling methods used, and provide copies of assay certificates.

(g) Send with your application at least *two* copies of all geologic or engineering reports, assay maps, or technologic information which you may have, indicating on each whether you require its return to you.

3. *Accessibility of Project:*

(a) To aid DMEA representatives who may be required to examine the property, state the name and address of the person who will meet the DMEA representative; give directions for reaching the property; and describe accessibility of the property including the mine workings.

(b) Name the shipping and supply points and places where employees reside and state the distances between them and the property.

4. *The Exploration Project:*

(a) Describe fully the proposed exploration project giving individual footages and sizes of openings *for each item of work.* Use narrative, maps, plans, and longitudinal and cross sections as necessary. Show the location of the proposed work as related to geologic features such as veins, ore-bearing beds, contacts of rock formations, etc. Show also the relation of the proposed work to any existing mine workings and to *property boundaries* or to the closest identifiable corner.

(b) If an access road to the project must be built, show the location on the property map and state the length, type, and construction methods proposed.

(c) In the event that an exploration contract with DMEA is executed, how soon will the work start and how many months will be required to complete it? State your anticipated average daily or monthly rate of progress for each type of work.

5. *Experience:*

State your operating experience and background with relation to your ability to carry out this exploration project, and also that of the person or persons who will supervise the operations.

6. *Estimate of Costs:*

Furnish detailed estimates of the costs *for each item of the work proposed in 4(a)* under the headings listed below with a total for each heading and the estimated total cost of the project. Costs for any work to be performed by an independent contractor should be shown separately under category *(a)* below. Costs for any work that is not to be performed by an independent contractor should be given in detail under categories *(b)* through *(g)*.

(a) Independent contracts. State the cost of any proposed independent contract for the performance of all or any part of the work, expressed in units of work, such as per foot of drilling, per foot of drifting, per hour of bulldozer operations, per cubic yard of material moved. Cost estimates should be supported by bids from three contractors if possible. *(Note* – If none of the work is to be contracted, write "none" after this item.)

(b) Personal services. For necessary supervision, engineering and geological services, and labor, include an itemized schedule of numbers, classes, rates of wages, salaries or fees, and periods of employment. State whether these technicians and employees are available.

(c) Operating materials and supplies. List items of material and supplies with their cost. Include under this heading power, water, and fuel, and units of equipment and tools costing less than $50 each.

(d) Operating equipment. List items of operating equipment to be used giving specifications and indicating how each item is to be acquired – i.e., rented, purchased, or provided by the applicant. If it is rented or purchased, state the estimated rental or purchase price. If it is to be furnished by the applicant, give its present fair market value.

(e) Initial rehabilitation and repairs. Describe the type and the cost of necessary *initial* rehabilitation or repair of existing buildings, fixtures, installations (exclusive of mine workings), and movable operating equipment now owned by the applicant, which will be used on the exploration project.

(f) New buildings, fixtures, installations. Describe each building, fixed improvement, and installation to be purchased, constructed, or installed for the exploration project stating specifications and cost including labor, materials and supervision.

(g) Miscellaneous. For the operating equipment listed in 6*(d)*, describe the type and estimate the cost of repairs and maintenance expected during project operations. Do not repeat initial repairs listed in 6*(e)*. Show also the costs of analytical work, accounting, workmen's compensation and employees' liability insurance, payroll taxes, and other required costs that do not fall within the previous categories.

Note – No items of general overhead, corporate management, interest, taxes (other than payroll and sales taxes), or any other indirect costs, or work performed or costs incurred before the date of the contract, should be included in the estimate of costs.

7. *(a)* State whether you are prepared to furnish your share of the cost of the proposed project in accordance with the regulations on Government participation stated in Sec. 7 of DMEA Order–I, Revised.

(b) Explain to what extent you propose to furnish your share of the costs by providing money, by use of equipment owned by you, or otherwise.

* * * * *

NT.-DUP. SEC., WASH., D.C. 25960

SUPPLEMENTARY INFORMATION
FORM MF-103

1. Applicant's Property Rights.

(a) The property included in this project is located in Section 34, Township 2 South, Range 4 East, SLM.

(1) Patented claims owned by New Park Mining Company.

Miriam No. 1, - - Mineral Survey No. 206.
Miriam No. 2, - - Mineral Survey No. 206
Fisher No. 1, - - Mineral Survey No. 6980

(2) Patented claims leased from United States Smelting, Refining and Mining Company.

Lookout Mountain, - - - - - Mineral Survey No. 7130
Lookout Mountain No. 2, - - Mineral Survey No. 7130
Dew Drop, - - - - - - - - - Mineral Survey No. 7130
Ethel,- - - - - - - - - - - Mineral Survey No. 7130

Unpatented claims leased from United States Smelting, Refining and Mining Company.

Link, - - - - - - - - - - - Mineral Survey No. 7130

This list includes all property subject to the government lien for royalty payments. New Park owns and leases several thousand additional acres of mining property adjoining this exploration area.

(b) The property is generally known as New Park Mining Company, Mayflower Mine, but has had the following local names during past years: Glencoe, Glen Allen, Star of Utah, Park Galena.

(c) As indicated above New Park Mining Company owns the patents on Miriam Nos. 1 and 2 and Fisher No. 1 claims. New Park Mining Company has a ten year lease and option to purchase the patented and unpatented claims from United States Smelting, Refining and Mining Company. This document is dated January 27, 1956, and an exact copy is attached.

(d) There are no encumbrances on this property.

2. Physical Description

(a) The mineralized fissure zone of interest in this project has been partially explored on the Star of Utah Tunnel level (Map B) and the Mayflower Tunnel level (Map C). Map D illustrates mine workings on the

Mayflower Mine 1630 level and details the location of fissure structures and the relationship of sedimentary and igneous rocks. The Mayflower Mine is operated through the Mayflower Tunnel. All necessary surface facilities, including shops, office, change room, dumps and railroad spur are located at the tunnel portal. The tunnel extends 7,200 feet to the Mayflower Mine underground operating shaft and extends an additional 4,000 feet to the face and site of the proposed exploration shaft. The Mayflower shaft collar is at the tunnel or 800 level and intermediate levels have been developed to the lowest or 2,000 foot level. Mine production has been through this shaft for the past fifteen years.

(b) New Park Mining Company owns the above described facilities.

(c) During the past eighty years the Park City Mining District has produced over $450,000,000.00 in non-ferrous metals. The Mayflower Mine production to date is as follows:

Total Value	$32,000,000
Tons of Ore Produced	1,250,000
Copper in lbs.	17,346,000
Lead in lbs.	134,021,000
Zinc in lbs.	173,108,000

Present production is approximately 3,500 tons per month. This is reduced from a normal monthly production of 5,500 tons because of present market prices. Settlements sheets and other production records are available for inspection at the mine office in Keetley, Utah.

(d) The ore reserve at the Mayflower Mine is commonly two years of normal production. Since 1950 the reserves have had the following average assay:

Gold	Silver	Lead	Copper	Zinc
0.39 oz.	6.4 oz.	4.2%	0.9%	6.7%

Sampling methods are based on the Butte (ACM) procedure and records are available at the mine office. Long section E and cross section F illustrate ore occurrences and some assay information.

(e) New Park Mining Company properties are situated in the southern part of the Park City Mining District. This district is characterized by a broad north-south striking anticline that has been modified by large east-west normal and overthrust faults and large igneous intrusions. The Mayflower Mine is located on the southeast limb of this anticlinal structure and stratigraphy includes the Mississippian formations--Deseret formation,

Humbug formation, Morgan formation and the Pennsylvanian Weber quartzite. In the vicinity of the mine these sediments have been intruded by large masses of quartz diorite porphyry and all these formations have been cut by the north easterly striking Park Galena--Mayflower fissure system that extends for several miles through this part of the district.

The Park Galena--Mayflower fissure outcropped at the surface and has been mined to a depth at 2,000 feet. This ore is continuing at depth as the bedded type deposits. The ore is typical of hydrothermal deposition in the middle temperature ranges with characteristic sericite-chlorite type alteration associated with the mineralization. The Pearl fissure has been mined from the 700 to the 1800 foot level. These fissures are approximately 500 feet apart and strike roughly east-west. Past production has been largely from fissures in the D-1 diorite (refer to Maps A, B, C, D, E, F). Since 1950 ore bodies in the Mississippian sediments at depth have been increasing in size, tons and grade. At the present time most of the production of the mine is from cherty or siliceous beds in the Deseret formation. Cross section F gives detailed information on the ore occurrence in the sedimentary rocks in the west end of the Mayflower fissure area. As shown on the section, the Deseret formation contains bedded ore replacements that have been offset by strands of the Mayflower fissure system. Recently high grade copper ores have been mined from large breccia zones on the 1630 level. The minerals are chalcopyrite, enargite and the ore produced averaged 8% copper with negligible lead and zinc. This adds considerable interest to exploration in "the west Mayflower Project" and is further indication of copper zoning in the southern part of the Park City Mining District.

Map E, is a long section on the plane of the Mayflower fissure. This illustrates the vein-type Mayflower ore body in D-1 diorite and the newly developed fissure and bedded replacements in the Humbug and Deseret formations. This stratigraphy conforms with that used in U.S.G.S. Professional Paper 201. The ore minerals of the Mayflower Mine include: Galena, Sphalerite, Pyrite, Chalcopyrite, Tetrahedrite and Enargite. The gangue minerals are quartz, rhodenite and calcite.

(f) The exploration area is known to have mineralized fissures and has produced some ore from surface adits, the Star of Utah tunnel level and the west end area of the Mayflower Mine. (Refer to Maps B, C and E).

The favorable rock types for ore at the Mayflower Mine are D-1 diorite (fissure deposits) and the Mississippian sediments. In contrast the Weber quartzite, Cw, quartz diorite porphyry, D-4, and the quartz monzonite porphyry D-5, have not been favorable for commercial quantities of ore. Work in the Mayflower Mine strongly indicates that favorable ore horizons are over and sometimes under the D-4 and D-5 diorites but almost never in them. The ore controls are probably a combination of such factors as rock types, structural patterns and perhaps residual rock temperatures at the time of deposition. The Deseret formation is an excellent host for bedding ores as shown in the Mayflower Mine and other properties in the District. The

underlying Madison limestone has been productive in other Districts. The longitudinal work on this project will probably be deep enough to prospect both the Deseret and Madison formations along the Mayflower fault system below the D-4 diorite. These siliceous limestones and dolomites of mid-Cambrian to mid-Mississippian age have a thickness of approximately 3,000 feet in the area to be explored.

The area selected for this major exploration program is bounded on the south and west by the D-4 diorite and on the north by the D-5 diorite. It is on the crest of an anticline and has a major set of fissure systems through it. On the Star Tunnel level this same fissure system is 1,200 to 1,300 feet wide and sulphide mineralization extends along the strike for 1,400 to 1,500 feet. Mineralization for this strike distance is of a lenticular nature. This mineralized area on the Star Tunnel level is nearly circular or elliptical in plan and appears to be a series of deposits in the upper extremities of mineral deposition. There is a definite similarity of mineralization and geological relationships between this proposed exploration area and the producing area of the Mayflower Mine as shown in Section F.

Based on this geological reasoning, the west end area is a logical location for a project to explore known fissures under the D-4 diorite in sedimentary rocks of Deseret or older age.

Maps B, C, D, E, F, G, will illustrate the reasoning and objectives of the project. The proposed cross cuts shown on Map D, should be driven in the most favorable areas as selected by diamond drilling. Laterals should be driven to explore fissure zones once the location of these favorable areas have been determined.

(g) All maps accompanying this report are copies and need not be returned.

3. Accessability of Project.

(a) Figure 1 (with maps) is a reference map for orientation of the Mayflower Mine with respect to other properties, towns, highways, etc. The mine is situated three miles from Keetley, Utah (on U.S. Highway 40). DMEA representatives may contact Clark L. Wilson at the Salt Lake City office, or Gale A. Hansen, Superintendent, at the mine office (phone Park City 50).

(b) New Park ore is loaded directly on the Union Pacific Railroad at the tunnel portal for shipment to the mill of United States Smelting, Refining and Mining Company at Midvale, Utah. Supplies come from Salt Lake City (40 miles), Park City (15 miles), and Heber City (10 miles). Workers in the district live at these nearby towns.

4. The Exploration Project.

(a) This exploration program "the West Mayflower Project" has been

planned as a separate unit located some 4,000 feet from our present Mayflower Mine operation. The shaft sinking program appears to be the logical approach to this area, based on considerations of ground water, mine operations and related engineering and geological factors. This project will involve use of the present main haulage level of the Mayflower Mine, the 801-A drift, the mine electrical distribution system, compressed air supply, ventilation, water supply and surface plant installations. This program will consist of the following work schedule.

Unit No. 1. Rehabilitation of the main haulage level ditch. Construction period four and one-half months. It will be necessary to install a 16" transite pipe through the Mayflower Tunnel to accommodate additional mine waters that will be encountered in this exploration program. This pipe will accommodate a projected flow up to 5,000 gallons per minute. Our studies indicated that a 16" diameter transite pipe is most suitable for this service. This decision was based on a thorough analysis of hydraulic data, ease of installation, and various types of pipe. Control of this water flow will improve haulage and ventilation facilities that are so important to this project.

Unit No. 2. Rehabilitation of 801-A drift. Construction period two months. 801-A drift will be the access level from our present Mayflower Mine operation to the proposed West Mayflower Project.

The drift is 3,800 feet long, 8' x 8' cross section, in fair ground and ideal for an operational level. Some rehabilitation will have to be done in the timbered areas, including a general clean-up of several small caves. The 30 pound track is now installed.

Ventilation. An exhaust ventilation system will have to be installed. This will require the installation of 3,200 feet of 20" fan pipe from the exhaust raise of the Mayflower unit to the proposed shaft location of the West Mayflower Project.

Compressed air and drill water. The project will also require 3,200 feet of 4" black standard pipe for compressed air supply. The water supply for the project can be obtained from an existing drill hole and will require the installation of 800 feet of 2" pipe.

Mine Water. It will be necessary to install a 12" diameter transite pipe through 1,760 feet of the 801-A drift to carry the mine waters over workings of the Mayflower Mine. This flow is estimated at a minimum of 2,000 gallons per minute.

Areas of proposed rehabilitation are indicated on Map C by points 1, 2 and 3.

1. 801-A drift 3,200 feet of rehabilitation.
2. 801-A drift. Location of water sump and installation of 12" transite pipe.

3. Point of discharge of 12" transite pipe into the main haulage level at 16" transite pipeline, 7,140 feet to the portal.

800 Level Water Sump. It will be necessary to excavate a water sump for the installation of a low head pump to put the mine water into the 12" transite pipe.

Unit No. 3. Drifting for shaft station. Construction time required one month. Drifting will be required to the shaft location, shaft raise, shaft station and pocket raise. This will require 240 feet of 8' x 8' drift. This will place the shaft operation in the best ground suitable for this installation and will be well oriented geologically for the exploration project (note plans).

The proposed location of shaft stations, hoist room, etc., are shown on Map H. The location of the proposed project to geologic features is indicated on enclosed geological maps C and D.

Unit No. 4. 800 Level shaft station. Construction time required 1.8 months. This includes cutting the shaft station, shaft raise, pocket raise on the 800 level.

(a) Shaft Raise: Ground section 17 x 9 x 85 feet fully timbered to accommodate the proposed $2\frac{1}{2}$ compartment shaft.

(b) Shaft Station: Ground section 55 x 20 x 12 feet. Large enough to accommodate a sinking hoist installation, transformers and storage.

(c) Pocket Raise: Ground section 45 x 12 x 8 feet, or 4,320 cubic feet, large enough to hold 200 tons of broken rock. This will limit the haulage to one shift per day while sinking the shaft.

Unit No. 5. Shaft sinking. Construction time one year. Sinking a $2\frac{1}{2}$ compartment fully timbered shaft 940 feet, 5'6" x 4'6" inside timber. The half compartment will accommodate man-way, air, water and electric lines, ventilation and pump columns. Size 3' x 5'6" inside timber. Shaft timber 8" x 8", lacing 2", hanging rods 3/4", sets on 5 foot centers, bearing sets at 400 feet and 830 foot depths. Station sets at 830 feet depth, sump at 111 feet depth to accommodate a submersible pump. Shaft work will be on a three shift per day basis with four men in the bottom per shift. An advance of about 75 feet per month is estimated based on anticipated sinking conditions.

Unit No. 6. Establish 1630 level station. Construction time two months.

(a) Shaft Station: Ground section 20' x 16' x 12', or 3,840 cubic feet.

(b) Pocket Raise: Ground section 30' x 10' x 10', or 3,000 cubic feet.

(c) Water Sump: Ground section 50' x 20' x 12', or 12,000 cubic feet.

Unit No. 7. Drifting on the 1630 level. Construction time 10.4 months. Total drifting and cross cutting, 2,605 feet of 7' x 8' drift. It is estimated that 30% will require timber. The drifting will be completed to reach locations for diamond drill stations and for the most part the drift will be in the wall rock adjacent to the known fissure areas. Diamond drilling will be used to probe for favorable mineralized areas along fissure structures. Cross cutting will be done in the mineral areas indicated by the diamond drilling. The exact location of the diamond drill holes, drifts and cross cuts will be determined by geological information as the project progresses. Some latitude must also be left in selecting the sites of drill holes, drifts and cross cuts, based on ground and water conditions.

Unit No. 8. Diamond drilling. Construction time two months. This will require 6,670 feet of drilling in approximately fifteen holes. The work will be performed in coordination with the drifting and cross cutting. Two hundred feet of drill stations will be excavated prior to the drilling.

4. (b) A secondary state highway connects with the property from the main highway U.S. 40. No other roads are necessary.

4. (c) This work can be started within three months and be completed in three years. The anticipated monthly rate of progress is given in 4(a) and in the following unit cost statement.

5. Experience

New Park Mining Company is one of the well established non-ferrous mining companies located in Salt Lake City, Utah. Officers and staff are experienced in mining operation and are competent to carry on this project. It will be supervised by Clark L. Wilson, Vice President and Manager of Operations and Gale A. Hansen, General Superintendent.

6. Estimate of Costs.

(a) Independent contracts

No information available at present.

The following estimate of costs will be itemized by units of the exploration program.

Unit No. 1. - Rehabilitation of Main Haulage Level Ditch.

Time required, 4.5 months @ 26 days. Install 7,140 feet of 16" diameter transite pipe to accommodate mine water.

(b) Personal Services

952 shifts (4 miners @ 2 shifts) @ $17.35. . .	$16,517.20	
Fringes @ 11.5%	1,899.48	
		$18,416.68
Supervision $600/mo @ 4.5 mo.	2,700.00	
Mechanic-Electrician $550/mo @ 4.5 mo	2,495.00	
Fringes @ 11.5%	595.12	
		5,790.12
Total labor		$24,206.80

(c) Operating Materials and Supplies

7,140 ft. of 16" transite pipe @ $3.50/ft . .	$24,990.00	
Special fittings.	1,000.00	
Ballast, bits, steel, powder, compressed air, timber, rock bolts	2,100.00	
Total.		$28,090.00

(d) Operating Equipment

Battery Motor	$ 5,750.00	
2 Jack hammers & hoses.	400.00	
2 mine cars (used).	600.00	
Total depreciation for 4.5 mos. @ 20% of $6,750.00 . . .		$ 506.25
Total Cost - Unit No. 1		$52,803.05

Unit No. 2. - Rehabilitation of 801-A Drift (3,800 feet)

Time required, two months, 50 work days.

(b) Personal Services

450 shifts (3 miners @ 3 shifts) @ $17.35. . .	$ 7,807.50	
Fringes @ 11.5%.	897.86	
		$ 8,705.36
Supervision $600/mo @ 2 mo	1,200.00	

Mechanic-Electrician $550/mo @ 2 mo	$ 1,100.00	
Fringes @ 11.5%	264.50	
		$ 2,564.50
Total Labor		$11,269.86

(c) Operating Materials and Supplies

1. Clean ditch - repair timber & track, clean ~~caves~~. Estimated supply expense for timber, nails, wedges, track, supplies, ties, etc., 2,700 ft @ $1.25/ft.	$3,375.00
2. Ventilation 20" vent pipe, wrapping & hangers 3,200 ft. @ $4.00/ft	12,800.00
3. Compressed Air Line 4" black standard pipe & fittings 3,200 ft. @ $1.65/ft	5,280.00
4. Drill Water 2" black standard pipe & fittings 800 ft. @ $0.54/ft	432.00
5. Drainage water from project 12" diameter transite pipe to handle drainage over Mayflower Mine workings 1,760 ft. @ $2.80/ft	4,928.00
6. 801-A Level Water Sump Excavate sump 20' x 10' x 8' for pumping drainage into 12" transite pipe. Powder, compressed air, steel & bits, 1,600 cu. ft. @ $0.17/cu.ft.	272.00
	$27,087.00

(d) Operating Equipment

Battery Motor	$ 5,750.00	
2 Jack hammers & hoses.	400.00	
2 mine card (used).	600.00	
Total depreciation for 2 mos. @ 20% of $6,750.00.		$ 224.98
Total Cost - Unit No. 2		$38,581.84

Unit No. 3. - Drifting for Shaft Station

Time required, one month, 26 work days.

(b) Personal Services

234 shifts (3 men @ 3 shifts) @ $17.35. . . .	$ 4,059.90	
Fringes @ 11.5%	466.89	
		$ 4,526.79
Supervision $600/mo	2,600.00	
Mechanic-Electrician $550/mo.	550.00	
Fringes @ 11.5%	132.25	
Surveying & Engineering	744.00	
		2,026.25
Total labor		$ 6,553.04

(c) Operating Materials and Supplies

Track, compressed air, steel & bits, powder, primers and lead wire, timber, ventilation, miscellaneous (power, shops, surface), hose, fittings, rocks, bolts, etc.
240 feet @ $14.04/ft. . . . . $ 3,369.60

(d) Operating Equipment

2 - Machine & accessories jumbo	$ 7,500.00	
2 - drills.	3,516.00	
1 - 21B Eimco Loader.	4,830.00	
2 - Batteries	6,500.00	
10 - 50 ft. cars	9,200.00	
1 - Motor (used).	2,500.00	
2 - 25 Hp. Fans	1,120.00	
4,000'- #2-3 cond. cable.	3,136.00	
	$38,862.00	
Total depreciation for one month @ 20%.		647.67
Total Cost - Unit No. 3		$10,570.31

Unit No. 4. - 800 Level Shaft Station (shaft raise, 15 days, shaft station, 15 days, pocket raise, 7 days)

Time required, 1.8 months.

(b) Personal Services

Shaft Raise - 135 shifts (3 men @ 3 shifts) @ $17.35	$ 2,342.25	
Fringes @ 11.5%.	269.36	
		$ 2,611.61

Shaft Station - 135 shifts (3 men @ 3 shifts)			
@ $17.35	$ 2,342.25		
Fringes @ 11.5%.	269.36		
			$ 2,611.61
Pocket Raise - 63 shifts (3 men @ 3 shifts)			
@ $17.35	$ 1,093.05		
Fringes @ 11.5%.	125.70		
			1,218.75
Supervision $600/mo @ 1.8 mo		$ 1,080.00	
Mechanic-Electrician $550/mo @ 1.8 mo. . . .		990.00	
Fringes on $2,070.00 @ 11.5%		238.05	
Surveying & Engineering $3.10/ft @ 185 ft. .		573.50	
			$ 2,881.55
Total Labor			$ 9,323.52

(c) Operating Materials and Supplies

Shaft Raise - Compressed air, steel & bits, powder, primers & lead wire. Miscellaneous - timber, hose & fittings, rock bolts, etc. (Power, ventilation, shops & surface) 85 ft @ $40.42/ft.	3,435.70
Shaft Station - Compressed air, steel & bits, powder, primers & lead wire. Miscellaneous timber, hose & fittings, rock bolts, etc. (power, ventilation, shops & surface) 13,200 cu.ft. @ 10.882¢/cu.ft.	1,436.44
Pocket Raise - Compressed air, steel & bits, powder, primers & lead wire. Miscellaneous - timber, hose & fittings, rock bolts, etc. (power, ventilation, shops & surface. 45 ft. @ $12.68/ft.	570.60
Total Materials and Supplies	$ 5,442.74

(d) Operating Equipment

2 - Jack Legs @ $775.00.	$1,550.00
1 - 21-B Eimco Loader	4,830.00
2 - 50 Cell Batteries	6,500.00
10 - 50 ft. mine cars.	9,200.00

1 - Motor.	$ 2,500.00	
2 - 25 Hp. Fans.	1,120.00	
4,000'- #2-3 cond. cable	3,136.00	
	$28,836.00	
Total depreciation for 1.8 mos. @ 20%/year		$ 865.08
Total Cost - Unit No. 4		$15,631.34

Unit No. 5. - Shaft Sinking (940 feet)

Time required, 12 months, 26 work days per month.

(b) Personal Services (cost per foot of shaft)

4 miners @ 3 shifts @$19.00/shift.	$ 85.62/ft. of shaft	
3 hoistmen @ $16.50/shift.	21.45 (adjusted for overtime)	
2 pumpmen @ $16.50/shift	14.30	
1 motorman @ $16.02/shift	6.01	
Supervision & Mechanic-Electricial @$1,150.00/mo.	15.33	
2 Surface-shop-dump, etc. @ $16.02	12.02	
	$154.73	
Fringes @ 11.5%.	17.79	
Engineering-Geology	3.10	
		$ 175.62/ft.

(c) Operating Materials and Supplies

Shaft set complete.	$ 49.63/ft.	
Misc. small tools & supplies.	4.90	
Explosives.	7.45	
Bits & Steel.	6.49	
Compressed Air.	2.05	
Electric power-ventilation-pumping-hoisting .	13.32	
		$ 83.84

(d) Operating Equipment

drill machines	$3,516.00
Sinking cage	2,420.00
portable blower.	488.00
misc. electric switches, etc..	1,750.00
2 - batteries.	6,500.00
10 - mine cars.	9,200.00
2 - 25 Hp. fan	1,120.00
2 - submersible pumps.	3,500.00
2 - MRV 30 centrifugal pumps	1,950.00

2 - air sponge pumps	$ 325.00	
Sinking Hoist - 150 Hp.	20,000.00	
2 - sheave wheels	996.00	
8" air cylinders	130.00	
Dump irons & chute gates	1,800.00	
1 - haulage motor	2,500.00	
	$56,195.00	
Depreciation for 1 year @ 20%	11,239.00	
Expendable Items of Equipment		
1 - blasting mat	550.00	
actual rental of mucker	6,000.00	
1" hoisting rope	855.00	
	18,644.00/940 ft.	$ 19.83
		$279.29

Total Cost - Unit No. 5 - 940 ft. @ $279.29 . . . . . $262,532.60

Unit No. 6. - Establishing 1630 Level Station

Time required, 2 months, 52 work days

Excavation of Station -	3,840 ft.
Pocket Raise -	3,000 ft.
Water Sump -	12,000 ft.
Total	18,840 ft.

(b) Personal Services

312 shifts (2 miners @ 3 shifts) @ $20.58	$6,420.96	
180 shifts (3 hoistmen @ 3 shifts) @$17.87	3,216.60	
156 shifts (1 motorman @ 3 shifts) @$17.35	2,706.60	
		$ 12,344.16
Fringes @ 11.5%		1,419.58
		13,763.74
Supervision @ $600/mo	1,200.00	
Mechanic-Electrician @ $550/mo.	1,100.00	
Fringes @ 11.5%	264.50	
Engineering (2 weeks)	250.00	
		$ 2,814.50
		$16,578.24

(c) Operating Materials and Supplies

Timber - rock bolts.	$ 900.00	
Bits, Rods, Explosives	4,144.80	
Power, hoisting, pumping, ventilation compressed air.	1,866.32	
		6,911.12
		$23,466.95

(d) Operating Equipment

List as per shaft sinking	$56,195.00	
Depreciation for 2 months @ 20%.		1,872.42
Total Cost - Unit No. 6		$25,361.78

Unit No. 7. - Drifting on the 1630 Level

Time required 10.4 months, 270 work days
2,605 feet of 7'x 8' drift.

(b) Personal Services

1622 shifts (2 miners @ 3 shifts) @ $17.35 .	$28,141.70	
936 shifts (1 hoistman @ 3 shifts)@ $17.87 .	16,726.32	
540 shifts (2 motormen) @ $17.35	9,369.00	
811 shifts (1 cager @ 3 shifts) @ $17.87 . .	14,492.57	
	$68,729.59	
Fringes @ 11.5%	7,903.90	
		$76,633.49
Supervision @ $600/mo.	6,240.00	
Mechanic-Electrician @ $550/mo	5,720.00	
Fringes @ 11.5%.	1,375.40	
Engineering & Geology.	8,075.50	
		$21,410.90
		$98,044.39

(c) Operating Materials and Supplies

Ventilation.	10,000.00	
Compressed Air line.	4,125.00	
Drill water line	1,350.00	
Rails & fittings	5,434.00	
Drill steel & bits	9,117.50	
Timber - 30%	4,087.20	
Explosives	12,894.75	
Power, compressed air, pump, hoist	12,251.87	
		$59,260.32

(d) Operating Equipment

Power Cable - blasting	$ 980.00
Power Cable - ventilation	1,960.00
Power Cable - pumps	17,560.00
3 - Rock Drills	4,516.00
Jumbo & Fittings	7,500.00
21-B Eimco Loader	4,830.00
1 - Canton Car Transfer	1,200.00
2 - Batteries	6,500.00
20 - 50 cu. ft. mine cars	18,400.00
5 - 25 Hp. Fans	2,800.00
1 - Charging Rack Complete	740.00
2 - Submersible Pumps (used)	10,000.00
Switches & Accessories	2,450.00
Sinking Hoist	20,000.00
Sheave Wheels	996.00
Dump Irons & Chute Gages	1,800.00
2 - Sinking Pumps	3,500.00
Misc. Valves, Fittings & Transformers	4,000.00
Haulage Motor - 5 ton used	2,500.00
Haulage Motor - 1 Ton & new battery	4,000.00
Haulage Motor - 2 Ton & new battery	6,000.00
	122,232.00

Depreciation for 10.4 months @ 20%	$ 21,170.58
Total Cost - Unit No. 7	$178,475.29

Unit No. 8. - Diamond Drilling

Time required 2 months, 6,670 ft. of drilling.

(b) Personal Services

90 shifts (Hoistman) @ $17.87	$ 1,608.30	
30 shifts (Pumpman) @ $17.87	536.10	
Drill Stations - labor for 200' @ $37.50/ft.	7,500.00	
Supervision $600/mo.	1,200.00	
Engineering & Geology @ $600/mo.	1,250.00	
	$12,044.40	
Fringes @ 11.5%	1,385.11	
		$ 13,429.51
Diamond Drill Labor 6,670' @ $4.00		26,680.00
		$ 40,109.51

(c) Operating Materials and Supplies

Diamond Drill supplies - bits, cement, etc., 6,670 ft. @ $4.00.	$ 26,680.00	
Power, air, hoisting, ventilation, pumping.	2,775.00	
Drill Stations - Material for 200' @ $22.60.	4,520.00	
		$33,975.00

(d) Operating Equipment

List as per 1630 drifting 2 months @ 20% of $122,232.00	$ 4,072.77	
Total Cost - Unit No. 8	$78,157.28	

(e) Initial Rehabilitation and Repairs

Not applicable.

(f) New buildings, fixtures, installations.

Not applicable.

(g) Miscellaneous

Installation of machinery & equipment. . . .	$ 7,552.40	
Accounting 300 @ 36 months	10,800.00	
Repairs, replacements & contingencies 10% per year of invested capital	38,200.00	
Analytical work 200 assays @ $4.50	900.00	
Total Cost - Miscellaneous		$ 57,453.20

RECAPITULATION OF COSTS

Unit No. 1	$52,803.05
Unit No. 2	38,581.84
Unit No. 3	10,570.31
Unit No. 4	15,631.34
Unit No. 5	262,532.60
Unit No. 6	25,361.78
Unit No. 7	178,475.29
Unit No. 8	78,157.28
Miscellaneous	57,453.20
Total Cost of Project	$719,566.69

Note: Wage rates used are those currently effective in the Park City Mining District and they have been weighted for overtime.

EQUIPMENT TO BE PURCHASED

2 - Jack leg drills	$ 1,550.00
2 - Machine Jumbo & Fittings	7,500.00
3 - Drills	4,516.00
1 - 21-B Eimco Loader	4,830.00
20 - 50 cu. ft. mine cars	18,400.00
1 - Portable Blower	488.00
5 - 25 Hp. Fans	2,800.00
4,000'- #2-3 conductor cable	3,136.00
1 - Sinking Cage	2,420.00
Misc. electric switch gear	4,200.00
2 - Submersible sinking pumps	3,500.00
2 - MRV-30 Centrifugal Pumps	1,950.00
2 - airsponge pumps	325.00
Sinking Hoist - 150 Hp.	20,000.00
2 - Sheave Wheels	996.00
8" Air Cylinders	130.00
Dump irons, Chute Gates	1,800.00
1 - Blasting Mat	550.00
Mucker Rental	6,000.00
Hoisting Rope	855.00
Power Cable - Blasting	980.00
Power Cable - Ventilation	1,960.00
Power Cable - Pumps	17,560.00
1 - Canton Car Transfer	1,200.00
1 - Charging Rock	740.00
Misc. fittings & transformers	2,450.00
Haulage Motor - 1 Ton (used) and battery	4,000.00
Haulage Motor - 2 Ton (used) and battery	6,000.00
	$127,336.00

Equipment owned by New Park Mining Company to be used on project.

1 - Haulage Motor	$ 2,500.00
2 - Jack Hammers	400.00
2 - Mine Cars	600.00
	$ 3,500.00

LEASE AND OPTION

THIS LEASE AND OPTION, made and entered into as of the 27 day of January, 1956, by and between UNITED STATES SMELTING REFINING AND MINING COMPANY, a corporation organized and existing under and by virtue of the laws of the State of Maine and qualified to do business in the State of Utah, Lessor, hereinafter referred to as "United States Company", and NEW PARK MINING COMPANY, a corporation organized and existing under and by virtue of the laws of the State of Nevada and qualified to do business in the State of Utah, Lessee, hereinafter referred to as "New Park";

W I T N E S S E T H :

That for and in consideration of the sum of Ten Dollars ($10.00) in hand paid to United States Company by New Park, receipt thereof United States Company hereby acknowledges, and in consideration of the faithful performance by New Park of its covenants herein set forth and subject to the reservations, limitations and conditions herein stated, United States Company does hereby lease, let and demise unto New Park those certain lode mining claims and properties situate in Sections 27, 28, 33 and 34, Township 2 South, Range 4 East, Salt Lake Meridian, in Uintah, Blue Lodge and Snake Creek Mining Districts in Summit and Wasatch Counties, State of Utah, particularly described as follows:

All of the following patented lode mining claims:

Claim	U. S. Lot or Survey No.	Claim	U. S. Lot or Survey No.
Ball Mountain	127	Period No. 3	6567
Callico	5929	Period No. 4	6567
Forty Fifth Star	5929	Period No. 5	6567
Glatyu	5929	Period No. 6	7035
Hard Up	5128	Period No. 7	7035
L. E.	5929	Period No. 8	7036
Lucky Star	5929	Period Fraction	7036
North Star	5929	Poor Man	5128
O. K.	5929	South Star	5929
Period No. 1	6567	Silver Shield	5128
Period No. 2	6567		

The described portions of the following patented lode mining claims:

American Boy, U. S. Survey No. 5328,

Beginning at Corner No. 4 of said claim and running North 30° 21' West along the easterly end-line 268.5 feet;
thence South 60° 42' West along the southerly side-line of the Blue Lodge Lode, U. S. Lot No. 39, 143.8 feet to intersect line 5-4 of Callico Lode, U. S. Survey No. 5929;
thence South 6° 44' East along said line 232.3 feet to intersect

line 1-2 of Magnet Lode, U. S. Lot No. 41;
thence South 54° 05' East along said line 68.3 feet to intersect line 3-4 of said American Boy Lode;
thence North 58° 30' East along said line 209.3 feet, more or less, to the point of beginning, containing 1.235 acres, more or less.

American Queen, U. S. Survey No. 5458,
Beginning at a point on Line 1-6 of said claim at its intersection with Line 1-4 of Forty Fifth Star Lode, U. S. Survey No. 5929 said point being situated South 58° 43' East, 312.3 feet from Corner No. 1 of said American Queen Lode, and running thence South 5° 54' West 335.4 feet to intersect Line 2-1 of American Chief Lode, U. S. Survey No. 5403;
thence North 75° 11' East along said Line 54.2 feet to Corner No. 1 of said Lode;
thence South 44° 22' East along Line 1-6 of said American Chief Lode, 168.2 feet to intersect Line 4-3 of said Forty Fifth Star Lode, U. S. Survey No. 5929;
thence along said Line 4-3 South 73° 44' East 477 feet to Corner No. 3 of said Lode;
thence North 5° 54' West 17.1 feet to Corner No. 5 of Gladys Lode, U. S. Survey No. 5929;
thence North 88° 26' East 68.1 feet to intersect Line 6-1 of said American Queen Lode, U. S. Survey No. 5458;
thence along said Line 6-1 North 58° 43' West 915.9 feet, more or less, to the point of beginning, containing 3.084 acres, more or less.

Ben Butler, U. S. Survey No. 6642,
All that part of said Ben Butler lode mining claim lying West of the West end line of the Success No. 1 and Phyllis lode mining claims, U. S. Survey No. 6810, and West of a line projected North from the northwest corner (Corner No. 1) of said Success No. 1 Lode.

Sitka lode mining claim, U. S. Survey No. 7185,
All that part of said Sitka lode mining claim lying South of a line drawn from the southwest corner of the San Diego lode mining claim, U. S. Lot No. 207, to the southwest corner of Oak Knoll lode mining claim, U. S. Survey No. 5027.
A two-thirds undivided interest in and to that part of said Sitka lode mining claim lying North of the above described line.

The total area of the above described lode mining claims and parts of claims is 238.935 acres, more or less.

All of the following unpatented lode mining claims identified by U. S. Survey number:

Bay Drop, Ethel, Link, Lookout Mountain, Lookout Mountain No. 2, and Murne, all U. S. Survey No. 7130.

All of the following unpatented lode mining claims identified by County Records of Notice of Location:

Claim	County	Notice of Location Recorded in County Records	
		Book	Page
Burns Fraction	Summit	5	231 and 307
Handsome	Kootenai	8	374

The described portions of the following unpatented lode mining claims:

Martha, U. S. Survey No. 7130,
All that portion of said Martha lode mining claim lying west of a line projected North from the northwest corner (Corner No. 1) of Success No. 1 lode mining claim, U. S. Survey No. 5810, to the south sideline of Oak Knoll lode mining claim, U. S. Survey No. 5027.

Forest, U. S. Survey No. 7130,
All that portion of said Forest lode mining claim lying west of the west end lines of Success No. 1 and Phyllis lode mining claims, U. S. Survey No. 6810, and west of a line projected north from the northwest corner (Corner No. 1) of said Success No. 1 lode mining claim and south of the south sidelines of said Phyllis lode mining claim, and west of the west end lines of the Realtor and Lavery lode mining claims, U. S. Survey No. 3768.

Said patented and unpatented lode mining claims are shown on the map marked "Exhibit A" attached hereto and made a part hereof, but said map shall not be controlling over the above description.

United States Company reserves the right to grant grazing permits on the leased premises.

TO HAVE AND TO HOLD unto New Park the said leased premises for prospecting, exploration, development and mining of ores of all kinds, with the right to remove, ship, sell and dispose of such ores, and for no other purpose, for a term of ten (10) years, commencing on the date hereof and ending at midnight on the 26 day of January, 1966, unless sooner terminated as hereinafter provided.

And in consideration of this Lease, New Park does hereby covenant and agree with United States Company as follows:

1. To forthwith post and thereafter keep posted in conspicuous places on the leased premises, such notices as may be necessary adequately to notify all persons who may come in or on said premises, that they are held by New Park under lease from United States Company and that New Park is liable for all labor performed and supplies and materials used by New Park in and upon said premises, and that New Park will be responsible for all debts and expenses incurred in operations under this Lease.

2. To perform not less than the following man shifts of work in the leased premises or in driving a heading or headings toward and within 1500 feet of the leased premises which if continued would become a suitable working entry into the same:

During the six-month period commencing January 1, 1961 and ending June 30, 1961, and each successive six-month period this Lease is in effect through June 30, 1963 . . . . . 200 man shifts

During the six-month period commencing July 1, 1963 and ending December 31, 1963, and each successive six-month period this Lease is in effect . . . . . 300 man shifts

provided, however, that should this Lease be in effect for only part of any said period, the number of man shifts New Park shall be required to perform for that period shall be the same fractional part of the above specified

man shifts as the part of the period this Lease is in effect bears to the full period. Now Park shall not be required to perform minimum work prior to January 1, 1961.

The term "man shifts of work", as used herein, means the work of one man for such number of hours in one day as is customary in the Mining District where the work is performed.

To submit to United States Company within fifteen (15) days after the end of each calendar semi-annual period prior to January 1, 1961, a report, with map or maps, describing any work performed during such period in the leased premises or in driving a heading or headings toward and within 1500 feet of the leased premises; and thereafter to submit to United States Company, within fifteen (15) days after the end of each calendar semi-annual period this Lease is in effect, a report, with map or maps, describing such work performed during such period and stating the number of man shifts of such work performed during such period.

3. To perform all work in the leased premises in a good and miner like manner, with due regard to the safety, development and preservation of the leased premises and adjacent premises and the workings therein.

4. To make maps of the leased premises in accordance with good mining practice; in the event of any core drilling, to preserve in proper manner at least a split one-half of all core obtained and keep such core available for examination by United States Company while this Lease is in effect and for a period of six (6) months thereafter hold it for delivery to United States Company, should it so request; and to furnish to United States Company within thirty (30) days after the end of each calendar semi-annual period:

(i) prints of all maps made during such period of the leased premises, the surface and underground workings;

(ii) copies of all assays made during such period of samples taken from the leased premises, together with maps or charts showing where the samples were taken and the width from which they were taken; and

(iii) logs of drill holes made during such period in the leased premises together with maps showing the location of such holes, the elevation, direction and dip of same.

5. To remove, insofar as is practicable and consistent with good mining practice, all commercial ores encountered in exploration, development and mining operations in the leased premises, to the end that said ores shall be preserved or reserved and shall not be wasted or left in an inaccessible condition. Waste rock which may accumulate in the progress of the exploration, development or mining operations shall not be deposited in drifts or cross-cuts, or other workings of the leased premises, except in abandoned stopes from which the ores shall have been removed, and when deposited in such stopes, it shall be deposited in a manner which will support underground workings.

6. To carry Workmen's Compensation and Occupational Disease Disability Compensation Insurance covering New Park's employees and subleasees. Before commencing any work under this Lease to furnish United States Company with a certificate of the insurance carrier that New Park's employees and subleasees are covered with Workmen's Compensation and Occupational Disease Disability Compensation Insurance. To pay any taxes and/or make any deductions under the Federal Insurance Contributions Act, Federal Unemployment Tax Act and/or Utah Employment Security Act for which New Park may become obligated, and to comply with all other laws, rules and regulations of any duly constituted governmental authority affecting New Park's operations in said leased premises; and, on request of United States Company, to furnish it supporting evidence of compliance with the requirements of this paragraph.

7. To keep all bills and accounts for labor performed and supplies and materials furnished in or for operations under this Lease, promptly paid, and not to allow any claim or lien for any such thing to be effectively made or asserted against the leased premises, or any part thereof, or against United States Company.

8. To hold United States Company harmless and fully indemnify it against all claims and demands of any kind or nature which may be made upon it or against the leased premises, for or on account of any debt or expense contracted or incurred by New Park, as well as from and against any and all acts, transactions or omissions of New Park; to defend and save United States Company harmless and fully indemnify it as to any liability or asserted liability for or on account of injury to or death of any person or damage to any property sustained during the continuance of this Lease alleged to have resulted from any act or omission of New Park or the unsafe condition of the

leased premises, except when United States Company has assumed the risk as provided in paragraph 11 below. Nothing herein shall be construed to mean that New Park will hold United States Company harmless or will indemnify it against any claims or demands based on a defect in United States Company's title to the leased premises.

9. To keep all buildings and other structures on and in the leased premises constantly insured in a good responsible insurance company or companies for their full insurable value, payable in case of loss to United States Company.

10. To do, prior to June 1, 1957 and prior to June 1 of each assessment year thereafter in which this Lease remains in effect on April 1 of such year, the annual assessment work required to keep and maintain the unpatented mining claims covered by this Lease in good standing, and to furnish to United States Company a statement of the work done and of the location, character and value thereof, so that it may file proof of labor; provided, however, that for any year or years in which assessment work on unpatented mining claims shall be suspended by act of Congress, United States Company shall file notice of intention to hold said unpatented mining claims, or any other proper papers under any such law, and in such matters shall cooperate in whatever way ful to New Park, and in the event of the absence or unavailability of United States Company's agents or officers, New Park is authorized to file such papers in United States Company's behalf.

11. To permit the representatives of United States Company at all reasonable times, and at United States Company's risk, to enter on the leased premises and any workings therein and into any workings in New Park's premises leading to the leased premises or within 1500 feet of the leased premises for the purpose of examining and inspecting the same, and for surveying, sampling and ascertaining whether the terms and conditions of this Lease are being performed and carried out by New Park, but the representatives of New Park may accompany the representatives of United States Company; and to permit the representatives of United States Company at all reasonable times to have access for examination of any drill cores from and log records of holes drilled in the leased premises and in New Park's premises within 1500 feet of the leased premises, and access to surveys and assay records and records of production from the leased premises and such other records as relate to compliance on the part of New Park with the provisions of this Lease.

12. To pay to United States Company the amount of the general property taxes, other than those based on net proceeds, which are assessed against the leased premises for each year this Lease is in effect, except that for the first and last two years this Lease is in effect New Park shall be obligated to pay only that proportion of such taxes as the period of each said year this Lease is in effect bears to the full year; and to pay to United States Company (a) in lieu of and as in full satisfaction of all occupation taxes, an amount determined by applying to the gross amount received by New Park for, or the gross value of, the metalliferous ores sold, produced from the leased premises in each calendar year and remaining after deducting the royalty payable to United States Company, as hereinafter provided, the occupation tax rate for the year in which such ore is produced, and (b) in lieu of and as in full satisfaction of property taxes based on net proceeds, an amount determined by applying to two times (or such other factor as may at that time be applicable) the net proceeds derived by New Park from its operation of the leased premises in each calendar year and remaining after deducting royaltiou payable as aforesaid, the applicable tax rate or rates for the year in which the ore is produced. If the applicable tax rate or rates have not been fixed by the time the smelter returns for the ores are available, preliminary settlement shall be made on the basis of the tax rates for the year immediately preceding the year of production. Upon determination of the rates for the year of production, the amounts payable shall be recomputed and appropriate adjustment made between New Park and United States Company.

To also make settlement with United States Company for any other taxes chargeable against United States Company and that may accrue for, or on account of, or be applicable to the operations conducted by New Park in the leased premises.

United States Company is authorized to deduct from the net smelter returns on ores mined and shipped by New Park from the leased premises the amount of the settlement for all said taxes.

13. To keep the ores removed by it from the leased premises segregated from ores from any other premises, to the end that none of the ores removed from the leased premises shall be commingled, confused or adulterated with ores from other premises; and except in the event shipment of ores from the leased premises is covered by an ore contract between the parties hereto, to ship all commercial ores removed from the leased premises to United States

Company's plant at Midvale, Utah, for settlement on terms then offered by United States Company, unless terms more favorable (after making due allowance for transportation and all other costs and charges) are obtainable elsewhere and New Park so notifies United States Company stating such more favorable terms and where obtainable, and United States Company within ten (10) days after receipt of such notice has not offered terms as favorable, in which event New Park shall not be obligated to continue to ship such ores to said plant.

In the event New Park ships any ores to said Midvale Plant which do not yield proceeds sufficient to reimburse United States Company for transportation costs and treatment charges, to promptly reimburse United States Company for any deficiency or the amount of such deficiency may be deducted by United States Company from any moneys that may be or may become payable by United States Company to New Park on ores shipped from the leased premises.

14. To pay United States Company royalty on all ores removed from the leased premises as follows:

(a) On ores having a net value of $15.00 or less per dry ton, a royalty of 5% of the net value of such ores.

(b) On ores having a net value in excess of $15.00 per dry ton, the percentage of royalty shall be 5% plus ½% for each $1.00 of net value per dry ton in excess of $15.00 per dry ton, with fractional figures proportionately, up to a maximum of 30% of the net value,

provided, however, that a minimum royalty of fifty cents (50¢) per dry ton shall be paid on all ores shipped from the leased premises.

"Net value" as used herein means the gross amount received, directly or indirectly, for each lot of ore (including any subsidy or equivalent thereof payable by the Federal Government or any agency thereof, as a result of the production, sale and/or disposal of each lot of ore or of the metal or other content thereof), less the charges for transporting the ore from mine to mill or smelter and the charges of the mill or smelter for processing the ore.

United States Company is authorized to deduct from the net smelter returns on ores mined and shipped by New Park from the leased premises the amount of all said royalties due.

15. Not to assign this Lease or sublet all or any portion of the leased premises to a party operating a mill or smelter competitive with United States Company's plant at Midvale, Utah.

16. To release, and it does hereby release, United States Company from all obligations under the Agreement between New Park and United States Company made as of September 24, 1951 as to ores removed under this Lease and in the event of the exercise of the option hereinafter granted, as to all ores removed.

AND THE PARTIES HERETO MUTUALLY AGREE:

(a) That said leased premises and New Park's rights under this Lease are subject to existing boundary line agreements between the parties hereto, and to extralateral rights, if any, of mining claims owned by others than the parties hereto; and that United States Company does not in any manner warrant title to the leased premises, or to any part thereof, or to any ore bodies therein, but by executing this Lease and by putting New Park in possession of the leased premises, United States Company intends to and does grant only such right and permission as it may grant under such title and interest as it holds in and to the leased premises, and New Park acknowledges that it accepts this Lease on such conditions. Upon request of New Park, United States Company will furnish to New Park, for examination and, in the event of the exercise of the Option hereinafter set forth, for retention, such abstracts and other muniments of title to the leased premises as United States Company may have.

(b) That if New Park at any time be in default in the performance of any of the terms and conditions of this Lease upon it made incumbent, including payment of royalties or other sums due hereunder, such default shall not operate to or give United States Company the right to cancel, forfeit or terminate this Lease, unless United States Company shall notify New Park in writing specifying the exact nature of such default and unless New Park shall, within thirty (30) days from the date of the receipt of such notification fail to make any payment due hereunder or to proceed diligently to cure any other default.

(c) That New Park may surrender this Lease upon giving United States Company sixty (60) days' prior written notice and executing, acknowledging and delivering to United States Company a proper release surrendering the leased premises, whereupon this Lease shall be terminated, and all liabilities of New Park under this Lease shall cease and determine, except liabilities incurred and owing, at that time.

(d) That upon forfeiture or surrender of this Lease or expiration of the term hereof, New Park will immediately deliver to United States Company the leased premises and all improvements therein or thereon, except buildings erected by New Park, including installed timber, rail, air lines, water lines, power lines and telephone lines, with all shafts, drifts, crosscuts, raises and other permanent workings used by New Park, thoroughly drained, clear of loose rock, waste and rubbish, and ready for immediate use. New Park shall have the right at any time within ninety (90) days after termination of this Lease, or within such extended time as may be granted by United States Company, to remove from the leased premises all buildings and all tools, equipment, machinery and other personal property placed therein or thereon by it, provided that United States Company shall have the option to purchase at a fair appraisal or such price as may be agreed upon by the parties hereto any ventilation, hoisting and pumping equipment necessary to the utility and accessibility of workings in the leased premises, by giving New Park written notice of its election to purchase the same within thirty (30) days after the date of such termination. All such buildings and personal property not so purchased, which remain on the premises at the end of such ninety (90) day period shall be deemed abandoned by New Park and all right, title and interest in and to such property shall immediately vest in United States Company and it shall become the owner thereof.

(e) That if New Park is delayed or interrupted in or prevented from performing its obligations as in this Lease provided, by acts of God, fires, flood, strikes or labor troubles, breakage of machinery, inability to obtain necessary equipment, supplies or labor, interruptions in delivery or transportation, shortage of railroad cars, insurrection or mob violence, injunction, regulations, orders or requirements of government, or other disabling cause beyond the reasonable control of New Park, then and in all such cases, New Park shall for the time being, and without liability, be excused from performance of its obligations as herein provided, for the period of such prevention, delay or disability, and this Lease and all the provisions thereof shall again come into full force and effect upon the termination of the period of prevention, delay or disability, resulting from any of the causes aforesaid, but the term of this Lease shall not be extended thereby.

(f) That New Park may assign this Lease and Option or sublet all or any portion of the leased premises to a responsible party who is not operating a mill or smelter competitive with United States Company's plant at Midvale, Utah, provided it gives United States Company reasonable advance written notice of such contemplated assignment or subletting of a major portion of the leased premises.

(g) That all notices under this Lease shall be in writing and, until otherwise notified, if given by United States Company, shall be sent by registered or certified United States Mail addressed to New Park Mining Company at 304 Walker Bank Building, Salt Lake City, Utah, or personally served on it, and if given by New Park, shall be sent by registered or certified United States Mail, addressed to United States Smelting Refining and Mining Company at 1019 Penthouse Building, Salt Lake City, Utah or personally served on it, and any notice shall be deemed given when so deposited in the mail or so personally served.

OPTION

In consideration of the faithful performance by New Park of its covenants in the foregoing Lease, United States Company hereby gives and grants to New Park the exclusive right, option and privilege to purchase at any time during the continuance of such Lease, all the right, title and interest of United States Company in and to the above described mining claims and properties, in the condition they are at the time, for the sum of One Hundred thousand Dollars ($100,000.00), less the sum of all royalties paid by New Park to United States Company under the aforesaid Lease, payable in cash to United States Company. A copy of the form of deed to be executed and delivered in the event of the exercise of this Option is hereto attached.

The foregoing Lease and Option and the provisions thereof shall be binding upon and inure to the benefit of the successors and assigns of the parties hereto.

IN WITNESS WHEREOF, the parties hereto have caused this Lease and Option to be signed by their respective officers thereunto duly authorized

and their corporate seals to be hereunto affixed, duly attested, as of the day and year first hereinabove written.

ATTEST:

Secretary

UNITED STATES SMELTING REFINING AND MINING COMPANY

By Oscar A. Glasser,
Vice President and General Manager
of Western Operations

ATTEST:

Secretary

NEW PARK MINING COMPANY

President

STATE OF UTAH
COUNTY OF SALT LAKE } ss.

On the 27 day of _____, 1956, personally appeared before me Oscar A. Glasser, who being by me duly sworn, did say that he is the Vice President and General Manager of Western Operations of United States Smelting Refining and Mining Company, and that said instrument was signed in behalf of said corporation by authority of a resolution of its Board of Directors, and said Oscar A. Glasser acknowledged to me that said Corporation executed the same.

NOTARY PUBLIC

My commission expires:

Residing at

STATE OF UTAH
COUNTY OF SALT LAKE } ss.

On the 27 day of _____, 1956, personally appeared before me who being by me duly sworn, did say that he is the President of New Park Mining Company, and that said instrument was signed in behalf of said Corporation by authority of a resolution of its Board of Directors, and said acknowledged to me that said Corporation executed the same.

NOTARY PUBLIC

My commission expires:

Residing at

MME Form 17
Mar. 59

OFFICE OF MINERALS EXPLORATI

WORK COMPLETED ANALYSIS

___ Certified yes

After final audit or review report is received, prepare in duplicate. File original in official docket. Send copy to Code 210.

Operator New Park mining Co

Actual Cost X

State Utah

Agreed Unit Cost X

Final Report of Audit

Commodity lead, zinc

Docket No. 4981

Final Report of Review 5-17-62

Contract No. 1218

Type of Work (Use these categories only)	Authorized by Contract and Amendments		Completed and Paid for		Net cost after sale of Gov't. Property
	Units	Cost[1]	Units	Cost[1]	
Drifting & Crosscutting	8600		3,339'	150,255	✓
Raising	250		272.5'	12,535	✓
Shafts					
Winzes					
Drilling (Specify) 11,000' Diamond			1718'	9,191.30	✓
Drilling (Specify) 20,000' longhole			7255.5'	7,255.50	✓
~~Surface Excavation~~ Timbering			953.5'	10,488.50	✓
Underground ~~Excavation~~ water doors			1	980.00	✓
~~Roads and Trails~~ assaying (2500)			1065	1,065.00	✓
~~Operating Equipment Purchased~~ Incidental allowance 25%			1718	429.50	✓
Surface Rehabilitation & Repairs					
Underground ~~Rehabilitation~~ drainage			7,149.5'	41,036.71	✓
New Building, Improvements, etc.					
Other (Specify) pumps & column				32,807.55	✓
Totals				266,044.06	[2]

Round off to dollars. Government's share 133,022.03

Cost total must agree with final report of audit or review.

Prepared by [signature] Date 8-27-62

52616

Building 20 - Federal Center
Denver 25, Colorado

December 16, 1960

OFFICIAL FILE COPY
O. M. E
RECEIVED DEC 19 1960

DATE	INITIAL	CODE
12/19	cae	210
12/19	[illegible]	800
"	Brinkhoff	500

Gale A. Hansen
General Superintendent
New Park Mining Company
Keetley, Utah

Re: DMEA-4981 (Lead-Zinc-Copper)
Contract No. Idm E1218
New Park Mining Co.
(Mayflower mine)
Wasatch County, Utah

Dear Mr. Hansen:

Thank you for your letter of December 6, 1960 regarding your change in plans because of the heavy flow of water you have encountered on the 2005 level.

Your proposed program appears to be within the limitations of the contract and this exploration has a great chance of finding ore. I am looking forward with interest to visiting you again and I hope to see you early next year.

I wish you and yours a very Merry Christmas and Happy New Year.

Yours very truly,

[illegible] signed by

Hugh M. Connors
Acting Field Officer
OME, Region III

HMC/lm
cc Chief, Division of Field Operations (2)
Royalty Corres E1218
Chron

Building 20 - Federal Center
Denver 25, Colorado

EXTRA COPY
O. M. E
RECEIVED DEC
DATE

December 16, 1960

Memorandum

To: Hugh M. Connors, Acting Field Officer, OME, Region III

From: T. M. Romslo

Subject: DMEA-4981 (Lead-Zinc-Copper)
Contract No. Idm-E1218
New Park Mining Co.
(Mayflower mine)
Wasatch County, Utah

This refers to the Operator's letter to you, dated December 6, 1960 relative to the suspension of drifting on the 2005 level and the proposed crosscutting and diamond drilling to test for ore zones to both the north and south of the Mayflower fissure system.

The decision to suspend drifting on the 2005 level for reasons explained by the Operator is a wise one. I also agree with the Operator's opinion that the proposed crosscutting and diamond drilling program has a good chance of encountering ore zones to both the north and the south of the presently productive Mayflower fissure zone.

The contract appears to provide for the proposed crosscutting and diamond drilling.

Original signed by

T. M. Romslo

TMR/lm

File
Chron

NEW PARK MINING COMPANY

KEETLEY, UTAH

SALT LAKE CITY OFFICE
904 WALKER BANK BUILDING

December 6, 1960

OME
DEPARTMENT OF THE INTERIOR
DEC 9 1960
REGION III
DENVER, COLORADO

Mr. Hugh M. Connors
Acting Field Officer
OME, Region III
Building 20, Federal Center
Denver 25, Colorado

Re: DMEA Docket No. 4981, Contract No. E-1218

Dear Mr. Connors:

During the month of November drifting on the 2005 level was suspended because of encountering an excessive flow of ground water. This condition required an additional 1,000 gallon per minute 350 h.p. pump to be installed at the main 1630 level pumping station, and an identical pump is scheduled to be installed this month as a stand-by pumping unit. After completion of the pump installation two long holes were drilled in the face of the 2005 level heading to test the volume of this new water to the west. The first hole encountered a flow of water of an estimated 450 gallons per minute. The second hole encountered an extremely high pressure flow of an estimated 1,200 gallons per minute. Both of the holes encountered the water at a depth of only eight feet and both holes have now been plugged.

This water appears to be in a large water course or cavern near the bottom of the Deseret Formation. Because of the extremely high pressure and volume of water indicated, further progress to the west on the 2005 level is prohibited at this time, because of the possibility of flooding conditions with an excessive flow of water beyond the capacity of our pumping units.

We are now in the process of installing a water door on the 2005 level that will serve as a final water block to this area of

the mine, in case the water flow encountered will not drain down and is too great for an economical pumping system. This door is also designed to allow the water area to be drained at a reasonable rate over a given period of time.

The Company has purchased a new horizontal wire line diamond drill unit and the first phase of our diamond drilling program will commence within the month of December.

Contract calls for independent contract drilling! Talbot

Two cross cuts, one north and one south of the 2005 level will be underway in the near future. The north cross cut will be driven near the sedimentary and diorite contact to evaluate the intersection of the Pearl and the North Pearl fissures. This will require approximately 350 feet of cross cutting. A drill station should be cut at this point for a diamond drill hole to be drilled northerly in search of any parallel fissures and the quartz monzonite contact. The south cross cut will be driven southerly from the 20-785 ore shoot. The objective will be to evaluate the westerly extensions of the Mayflower fissure intersections. This will require approximately 500 feet of cross cutting. A drill station will be cut at this point for a diamond drill hole to be drilled southerly in search of any parallel fissures in the location of the quartz diorite intrusive. The diamond drilling, percussion drilling and the proposed cross cutting will be in progress while awaiting the encountered flow of water in the main 2005 west heading to drain down. After that time it may be possible to continue the 2005 level heading westerly. The proposed diamond drilling and cross cutting appears to have an excellent geological potential for finding new fissures and ore zones within the limits of our present DMEA contract.

We would appreciate your reactions to this proposed program and would enjoy a discussion with you during your next trip to Park City.

Very truly yours,

NEW PARK MINING COMPANY

Gale A. Hansen
General Superintendent

GAH:jw
cc: Robert L. Cranmer
Carl D. Harper
Bob Archer

UNITED STATES
DEPARTMENT OF THE INTERIOR
OFFICE OF MINERALS EXPLORATION
Building 20 - Federal Center
Denver 25, Colorado

OFFICIAL FILE COPY
O. M. E.
RECEIVED AUG 12 1960

DATE	INITIALS	CODE
8-12	gad	VVO
8/12	[illegible]	800
"	[illegible]	500

August 9, 1960

Memorandum

To: George C. Selfridge, Chief
Division of Field Operations, OME
Washington 25, D. C.

From: Hugh M. Connors, Acting Field Officer, OME, Region III

Subject: Docket DMEA-4981 (Lead-Zinc-Copper)
Contract Idm-E1218
New Park Mining Company
(Mayflower Mine)
Wasatch County, Utah

This has further reference to your memorandum dated August 2, 1960 on the subject contract.

It is my thought that the attached copy of a letter from the superintendent of the subject property clarifies the matter of commingled ore. If this method of calculating the value of DMEA ore is not satisfactory, will you please advise.

Hugh M. Connors

Hugh M. Connors

Attachment

Acting Field Officer
O.M.E. Region III
Building 20 - Federal Center
Denver 25, Colorado

July 27, 1960

OME
DEPARTMENT OF THE INTERIOR
AUG 5 1960
REGION III
DENVER, COLORADO

Re: Docket No. DMEA 4981 - Contract E-1218
New Park Mining Company

Dear Sir:

During the month of May, ore was encountered in the 2005 West Drift and part of the production from the drift was shipped as ore.

During June, short drifts were run east and west along this fissure and more ore was produced. (20-789 E. & W. Drs.)

A drift was started from 20-866 cross-cut to develop ore located in drill hole No. 6 and ore was produced from this drift.

Because the ore is mixed with ore from other producing areas of the mine, tonnages and grade are estimated by averaging assay results from cut samples and comparing reported production with measured volume of material mined.

2005 W. Dr.
During May, 2005 W. Dr. produced 238 tons of ore at an average assay value of .05 Au, 1.3 Ag, 3.2 Pb, o.9 Cu, 5.4 Zn. This has a net smelter return value of $8.80 per ton. This was reported as $9.00 in the May progress report.

20-789 E. & W. Drs.
During June, these drifts produced a total of 410 tons at a value of $15.02 per ton calculated as follows:

Reported production - 427 tons @ $15.68 per ton (from grab samples.)

Measured volume - 393 tons @ .06, 1.8, 7.2, 1.2, 4.3 or $14.30 per ton (weighted average of cut samples.)

Average of reported production and measured volume - 410 tons @ $15.02 per ton.

20-866 Dr.
During June, this drift produced a total of 236 tons at a value of $9.46 per ton calculated as follows:

Reported production - 212 tons @ $11.86 per ton.

Measured volume - 259 tons @ .08, 1.7, 3.2, 0.4, 4.0 or $7.50 per tons.

Average of reported production and measured volume - 236 tons at $9.46 per ton.

	Totals	
May - - -	238 tons	@ $ 8.80
June - -	646 tons	@ $12.99
Total - -	884 tons	@ $11.86

ck for $473.13 was attached.
Amc.

Very truly yours,

NEW PARK MINING COMPANY

Gale A. Hansen, Supt.

GAH:jc

MME Form 7
(10-58)

OFFICIAL FILE COPY

Date	Surname	Code
8/2	Griswold	500
8/2	Talbert	800
8/2	Selfridge	130
"	Johnson	110
8/2	gad	220
		500

AUG 2 1960

Memorandum

To: Acting Field Officer, Region III

From: Chief, Division of Field Operations

Subject: IMEA-4981 (Lead-Zinc-Copper)
New Park Mining Company
Mayflower Mine
Wasatch County, Utah
Contract Idm-E1218

We have your memorandum of July 25, with enclosures, covering the handling of commingled ore. The method outlined by the Operator in its June 24, 1959, letter appears satisfactory if it is carried out. On the other hand, the 238 tons of ore shipped from the drifting, as noted in the May report, was assigned calculated grade. This method generally would not be acceptable. Incidentally, no royalty payment has yet been received on this ore though it was shipped in the month of May. It's a little difficult to understand how a 10-foot vein of $24.30 grade could be so badly diluted that the shipped product was only of $9.00 per ton value. The royalty payment should be accompanied by the grade calculation.

Obviously, a small tonnage shipped from a few drift rounds is nothing to fuss about, but we will expect a more precise control where ore tonnage is of any appreciable amount, in keeping with the attachments to your July 25 memorandum.

/S/ George C. Selfridge

(SHB)

WRGriswold/gla
8-2-60
cc to: Director's Reading File
Review Committee
CA&A Division
Docket
Chron

43683

UNITED STATES
DEPARTMENT OF THE INTERIOR
OFFICE OF MINERALS EXPLORATION
Building 20 - Federal Center
Denver 25, Colorado

OFFICIAL FILE COPY
O. M. E.
RECEIVED JUL 28 1960

DATE	INITIALS	
7-28	gad	VVO
7/28	[illegible]	800
"	Received	500

July 25, 1960

Memorandum

To: George C. Selfridge, Chief
Division of Field Operations, OME
Washington 25, D.C.

From: Hugh M. Connors, Acting Field Officer, OME, Region III

Subject: Docket No. DMEA 4981 (Lead-Zinc-Copper)
Contract No. Idm-E1218
New Park Mining Company
(Mayflower Mine)
Wasatch County, Utah

This responds to your memorandum of July 8, 1960 on the subject docket.

We are informed that there has been no change in the Operator's method of handling the commingled ore since their proposal of June 24, 1959 was accepted by J. W. Townsend by his letter to the Operator, dated June 26, 1959.

Two copies of the Operator's letter dated June 24, 1959 and two copies of Mr. Townsend's reply dated June 26, 1959 are attached.

Hugh M. Connors

Hugh M. Connors

attachments

224 New Customhouse
Denver 2, Colorado

June 26, 1959

Mr. Clark L. Wilson, Vice-President
New Park Mining Company
904 Walker Bank Building
Salt Lake City, Utah

Re: Docket No. DMEA 4981 (Lead-Zinc-Copper)
Contract No. Idm-E1218
New Park Mining Company
(Mayflower Mine)
Wasatch County, Utah

Dear Mr. Wilson:

Thank you for your letter of June 24, 1959, regarding the co-mingling of DMEA ore with company ore. We believe that your proposed method of estimating the grade and tonnage of DMEA ore is fair to all concerned.

Please submit to this office each month three copies of a letter showing the number of cubic feet of ore mined in each DMEA heading checked by mine car tallies, together with cut sample assays from all working faces, and grab sample assays from the muck piles, and the total estimated value.

For your convenience we are attaching a table showing the basis for computing DMEA royalty payments.

Very truly yours,

Original signed by
J. W. TOWNSEND

J. W. Townsend,
Executive Officer, OME
Field Team, Region III

Enclosure

HMC:ltm

cc: Chmn. Op. Comm. (2)
Royl. file, E1218
Chron.

NEW PARK MINING COMPANY

KEETLEY, UTAH

SALT LAKE CITY OFFICE
904 WALKER BANK BUILDING

June 24, 1959

OME
DEPARTMENT OF THE INTERIOR
JUN 25 1959
REGION III
DENVER, COLORADO

Mr. J. W. Townsend
Executive Officer, OME
Field Team, Region III
224 New Custom House
Denver 2, Colorado

Re: Docket No. DMEA 4981
Contract No. Idm-E1218

Dear Mr. Townsend:

We have had some discussion in the past several months with Mr. Howse and also with Mr. Finch regarding an accounting problem that may develop as we begin to produce ore on the property included in our above referenced DMEA project.

Our engineers report that development work on the 1380, 1505 and 1630 levels is bringing these particular drift headings within a short distance of the vertical DMEA royalty participation line, as shown on the maps accompanying our contract. We also anticipate that ore will be available on the 2005 level within a reasonably short time.

In analyzing the transportation and hoisting problems of these ores we find that it will be impossible to segregate them from the general mine run for transportation outside and shipment as separate lots to the custom smelter. To try and separate such ores would upset our handling procedures to the point that costs would be exorbitant and make some of this ore impossible to handle.

I have asked our geologists and engineers to analyze this situation and they find from past experience that the tonnage and grade of ores mined from any particular working place can be estimated quite accurately. We propose that in each of these DMEA participation working places that we will determine tonnage by measuring the cubic feet of ore mined and this will be checked by the mine car tally from that working place. Further, we will take a series of systematic cut samples

of the working faces and also grab samples from ore produced in these places.

Our experience in this work indicates that the plus or minus error will be approximately $1.00 per ton, or approximately 5%. As a matter of fact experience indicates that the grab samples and cut samples are on the high side compared to smelter returns as there is some dilution of mining. This will be to the advantage of the DMEA in making repayments. We do not feel that the amount of money will be detrimental to New Park, in fact it would tend to pay off the DMEA loan a bit sooner.

We feel that this is an equitable and sensible solution and would appreciate your approval in the near future to eliminate any misunderstanding when ore returns do come from these DMEA areas.

Very truly yours,

NEW PARK MINING COMPANY

Clark L. Wilson
Vice President

CLW:jw

Building 20 - Federal Center
Denver 25, Colorado

OFFICIAL FILE COPY
O. M. E.
RECEIVED JUL 18 1960

DATE		CODE
7-18	gad	800
7/18		800
"	Grimes	500

July 15, 1960

Mr. Robert L. Cranmer, Executive Vice President
New Park Mining Company
904 Walker Bank Building
Salt Lake City, Utah

Re: Docket No. DMEA-4981 (Lead-Zinc-Copper)
Contract No. Idm-E1218
New Park Mining Company
(Mayflower mine)
Wasatch County, Utah

Dear Mr. Cranmer:

By letter to your company under date of August 14, 1958, the former Alternate Acting Executive Officer, DMEA Field Team, Region III, waived the requirement for documentary support of your monthly vouchers. Site audits of the accounts pertaining to the project thereby became mandatory and have been made on two occasions.

One of the purposes of the recently executed Amendment No. 7 to this contract was the elimination of the need for site audits. To make this fully effective, you are advised that the waiver of documentation is rescinded and future vouchers claiming costs of diamond drilling (the only work remaining for performance on an "actual cost" basis) must be supported by certified copies of the drilling contractor's invoices.

Yours very truly,

Original signed by

Hugh M. Connors
Acting Field Officer
OME, Region III

TMR/lm MK

cc: Chief, Division of Field Operations (2)
File DMEA 4981 E 1218
Chron

OFFICIAL FILE COPY
RECEIVED JUL 18 1960
DATE

Mr. Robert L. Brunner, President
Utah Power & Light Company
Salt Lake City, Utah

Re: Project No. 1904-Utah (Pine Creek)
Application No. 1904-1913
Pine Creek Hydro Project
(Weber River dam)
Morgan County, Utah

Dear Mr. Brunner:

In letter to your company under date of August 14, 1959, the Deputy Attorney Gulion the Area Director, DMRA Field Team Region III, noted the requirement for formal adjudication of your security interest. [illegible] audits of the accounts pertaining to the project thereby become mandatory and have been made on the [illegible].

One of the purposes of the security agreement was to avoid the elimination of the [illegible] fully cooperative [illegible] you are subject to the terms [illegible] action [illegible] and [illegible] [illegible] on [illegible] [illegible] supported by [illegible] [illegible] [illegible].

Very truly yours,

Original signed by

Earl M. Cummins
Acting Field Director
Off. Section I.I

EMR/lm
cc: Chief, Division of Field Operations (2)
File DMRA 1921 - E 1218
Chron

Building 20 - Federal Center
Denver 25, Colorado

OFFICIAL FILE COPY
O. M. E.
RECEIVED JUL 14 1960

DATE	INITIALS	CODE
7-14	gad	VVO
7/14	[illegible]	800
"	[illegible]	500

July 12, 1960

Gale A. Hansen
General Superintendent
Mayflower Mine
New Park Mining Company
Keetley, Utah

Re: INKA 4981 (Copper-Lead-Zinc)
Contract Rdm E1218
New Park Mining Company
(Mayflower mine)
Wasatch County, Utah

Dear Mr. Hansen:

This has further reference to our discussion June 24, 1960 relative to commingling Project ore and Company ore.

Will you please write me a letter stating what methods of control are being used and will continue to be used to determine the tonnage, grade, and value of Project ore which is commingled and shipped with Company ore.

Very truly yours,

Original signed by

Hugh M. Connors
Acting Field Officer
OME, Region III

HMC/lm
cc: Chief, Division of Field Operations (2)
Contract Corres E1218
Chron

OFFICIAL FILE COPY
O.M.E.
RECEIVED JUL 11 1960

DATE	INITIALS

MME Form 7
(10-58)

OFFICIAL FILE COPY

Date	Surname	Code
7/12	Talbert	800
	Grisamel	500
7/12	SCL	130
"	Johnson	110
7/12	gad	220
		500

JUL 12 1960

Memorandum

To: Acting Field Officer, Region III

From: Chief, Division of Field Operations

Subject: DMEA-4981 (Lead-Zinc-Copper)
New Park Mining Company
Mayflower Mine
Wasatch County, Utah
Contract Idm-E1218

By letter to the subject Operator under date of August 14, 1958, the former Alternate Acting Executive Officer, DMEA Field Team, Region III, waived the requirement for documentary support of the Operator's monthly vouchers. Site audits of the Operator's accounts pertaining to the project thereby became mandatory.

One of the purposes of the recently executed Amendment No. 7 to this contract was the elimination of the need for site audits. To make this purpose fully effective, it is suggested that you advise the Operator that the waiver of documentation is rescinded and future vouchers claiming costs of diamond drilling (the only work remaining for performance on an "actual cost" basis) must be supported by certified copies of the drilling contractor's invoices.

/s/

George C. Selfridge

(SCS)

EDTalbert/fw-7/11/60
cc: Docket
Dir.Read.File
Review Committee
Mr. Kirkemo, USGS
CA&A Division
Chron.

43683

UNITED STATES
DEPARTMENT OF THE INTERIOR
OFFICE OF MINERALS EXPLORATION
Building 20 - Federal Center
Denver 25, Colorado

OFFICIAL FILE COPY
O M E
RECEIVED JUL 11 1960

DATE	INITIALS	CODE
7-11	gad	VVO
7-11	[illegible]	V10
		V00

July 5, 1960

Memorandum:

To: George C.Selfridge, Chief
Division of Field Operations, OME
Washington 25, D. C.

From: Hugh M. Connors, Acting Field Officer, OME, Region III

Subject: Docket No. DMEA ~~4931~~ 4981 (Lead-Zinc-Copper)
Contract No. IDM-E1218
New Park Mining Company
(Mayflower Mine)
Wasatch County, Utah

Enclosed with the operator's letter of transmittal are the Government's, Audit's and Fiscal Section copies of Amendment No. 7 on the subject contract which have been signed by Robert L. Cranmer, Executive Vice President. We have retained the Field Office copy of the Amendment.

Hugh M. Connors

Hugh M. Connors

Attachments

NEW PARK MINING COMPANY

KEETLEY, UTAH

SALT LAKE CITY OFFICE
904 WALKER BANK BUILDING

July 1, 1960

OME
DEPARTMENT OF THE INTERIOR
JUL 5 1960
REGION III
DENVER, COLORADO

United States Department of the Interior
Office of Minerals Exploration
Building 20, Federal Center
Denver 25, Colorado

OFFICIAL FILE COPY
O. M. E.
RECEIVED JUL 11 1960

DATE	INITIALS	CODE
7-11	gad	rro
		500

Attention: Hugh M. Connors
Acting Field Officer
OME, Region III

Re: Docket No. DMEA ~~4931~~ 4981 (Lead-Zinc-Copper)
Contract No. Idm-E1218
New Park Mining Company
(Mayflower Mine)
Wasatch County, Utah

Dear Mr. Connors:

I am returning herewith the Government's, Field Office, and Audit's and Fiscal Section copies of the proposed Amendment No. 7 to Contract No. Idm-E1218 sent to this office by letter dated June 27, 1960, by you.

You will find that all copies have been signed by the undersigned as Executive Vice President of the New Park Mining Company and that the corporate seal has been affixed thereto. We have retained in this office the Operator's copy and are returning the Government's copy, Field Office Copy, Audit Copy and Fiscal Section copy.

As Mr. Clark L. Wilson has recently resigned his position with this company and is now Chairman of the Emergency Lead-Zinc Committee with offices in Washington, D. C., all further communications should be addressed to the undersigned pertaining to the above subject matter.

Very truly yours,

NEW PARK MINING COMPANY

Robert L. Cranmer
Executive Vice President

Encl.

MME Form 7
(10-58)

OFFICIAL FILE COPY

Date	Surname	Code
	Fraunel	500
7/8	Talbert	800
7/8	GCS	130
"	Johnson	110
7/8	Gad	220
		500

JUL 8 1960

Memorandum

To: Acting Field Officer, Region III

From: Chief, Division of Field Operations

Subject: DMEA-4981 (Copper-Lead-Zinc)
New Park Mining Company
Mayflower Mine
Wasatch County, Utah
Contract Idm-E1218

We note in our copy of the June 28 memorandum of T. M. Romslo that a few-hundred tons of project ore were commingled with the Operator's ore and shipped for milling. We trust that in the future there will be increasing amounts of such project ore, which presumably will be commingled with other ores before going to the mill.

In such instances, where commingling is unavoidable, we always try to come to some arrangement with the Operator which will be mutually satisfactory. Therefore, will you get in touch with the representatives of the New Park Mining Company, asking how they propose to handle the problem, what methods of control they propose, etc., and advise us accordingly, with your recommendations.

/s/

George C. Selfridge

(b(3))

WRGriswold/fw-7/7/60

cc: Docket
Dir.Read.File
Review Committee
CA&A Division
Chron.
Mr. Kirkemo, USGS

43683

OFFICIAL FILE COPY O. M. E. RECEIVED JUN 30 1960		
DATE	INITIALS	CODE
6/30	coc	210
"	EJ	800
"	[illegible]	500

Building 20 - Federal Center
Denver 25, Colorado

June 27, 1960

CERTIFIED MAIL

Mr. Clark L. Wilson, Vice President
New Park Mining Company
904 Walker Bank Building
Salt Lake City, Utah

see letter 7/1/60 Mr. Wilson resigned. Address Robert L. Crosby Pres. New Park Mining Company Keeley Clerk

Re: Docket No. DMEA 4931 (Lead-Zinc-Copper)
Contract No. Idm-E1218
New Park Mining Company
(Mayflower Mine)
Wasatch County, Utah

Dear Mr. Wilson:

Enclosed are the Government's, Operator's, Field Office, Audit's and Fiscal Section copies of proposed Amendment No. 7 to Contract Idm E1218 which has been prepared for a twofold purpose. Part One puts all work, after April 1, 1960, on a fixed unit base. Part Two provides for the use of steel sets in place of timber, when necessary.

If the amendment meets with your approval, all copies are to be signed by an official of the New Park Mining Company authorized to sign such an instrument, the signer's title inserted, the corporate seal affixed, and all copies except the Operator's copy returned to this office.

If the amendment is not satisfactory to you, all copies are to be promptly returned to this office, together with your comments on, or objections to the amendment.

Yours very truly,

Original signed by

Hugh M. Connors
Acting Field Officer
OME, Region III

Enclosures
HMC/lm
cc: Chief, Division of Field Operations (2)
Corres File E1218
Chron

OFFICIAL FILE COPY
O. M. E.
RECEIVED JUN 30 1960

DATE	INITIALS	CODE
[illegible]	[illegible]	[illegible]
[illegible]	[illegible]	[illegible]
[illegible]	[illegible]	[illegible]

Bureau of Federal Water
Denver 25, Colorado

Area 2

[illegible]

[illegible]
[illegible] Company
[illegible] Bank Building
[illegible] Utah 84111

Re: Lease No. [illegible] ([illegible])
Company [illegible]
[illegible] Drilling Company
(Wellborn Wells)
[illegible] County, Utah

Gentlemen:

Reports from the Department of Operations, Field Office, [illegible] and Tribal Section of the Bureau of Indian Affairs (the Contract) indicate that the [illegible] has been granted for a [illegible] period. Part one period is [illegible] from April 1, 1960 on a fixed rate basis. [illegible] variables for the use of actual [illegible] in place of [illegible] when [illegible] are [illegible].

If the [illegible] agree with your [illegible] and further are [illegible] to be [illegible] by an official of the Bureau of the Contract [illegible] to [illegible] a [illegible] inspection, the [illegible] [illegible] the [illegible] [illegible] actual [illegible] [illegible] the [illegible] [illegible] [illegible]

COPY
Sol. - AL

UNITED STATES
DEPARTMENT OF THE INTERIOR
OFFICE OF THE SOLICITOR
Washington 25, D. C.

In reply refer to:
404-59

June 30, 1960

George Cochran Doub, Esq.
Assistant Attorney General
Civil Division
Department of Justice
Washington 25, D. C.

Dear Mr. Doub:

In response to a request made by Miss Mary K. Fagan of the Court of Claims Section in connection with the case entitled Jack D. Gay, Trustee for Shareholders of Northwest Uranium Mines, Inc. v. United States, No. 404-59 in the Court of Claims, we are making available copies of various documents from the following dockets of the former Defense Minerals Exploration Administration:

Northwest Uranium Mines, Inc.	-	DMEA 4125
Silver Buckle Mining Co.	-	DMEA 3071
Pathfinder Uranium Corporation	-	DMEA 3646
New Park Mining Co.	-	DMEA 4981

Of course this Department wishes to assist the Department of Justice as fully as possible in the defense of this suit. However, we feel constrained to point out that it was the policy of the Defense Minerals Exploration Administration--a policy continued by the Office of Minerals Exploration--that certain information submitted by an applicant, such as financial data, geological and property maps, details and results of work performed including data on ore potential, have not been made available to the public.

Further, the report of the "on site" examination and other examinations by field teams are in the same category. In addition, it seems to us that there is at least a question whether the disclosure of such information as has been mentioned would contravene the provisions of 18 U.S.C., sec. 1905.

Sincerely yours,

(Signed) GEORGE W. ABBOTT
The Solicitor

By: Edmund T. Fritz
Edmund T. Fritz
Deputy Solicitor

BWright:gla
Enclosures

Copy to: Mr. Selfridge, OME, Rm. 4440

MME Form 7
(10-58)

OFFICIAL FILE COPY

Date	Surname	Code
6/17	Griswold	500
6/17	Talbot	800
6/21	Selfridge	130
"	[illegible]	110
6/21	gad	220
		500

JUN 21 1960

Memorandum

To: Acting Field Officer, Region III

From: Chief, Division of Field Operations

Subject: DMEA-4981 (Lead, Zinc, and Copper)
New Park Mining Company
Mayflower Mine
Wasatch County, Utah
Contract Idm-E1218

SOLICITOR

JUN 20 1960

INTERIOR DEPT.

We are enclosing the original and four copies of a proposed Amendment No. 7 (four pages) to the cited contract. All copies have been signed by the Acting Director for the Government.

The purpose of the amendment is twofold. Part One puts all work, after April 1, 1960, on a fixed unit base. It appears that no possible advantage could accrue to the Government by maintaining this contract on an actual cost base; to the contrary, additional auditing expenses would be involved. Part Two provides for the use of steel sets in place of timber, when necessary.

If the amendment meets with your approval, please present it to the Operator for signature. Otherwise, if any proposed changes lie beyond your delegated authority, please return all copies, unsigned, with your comments.

When the amendment is executed, the Operator should retain its copy, the Field Office copy should be retained by your office, and the Government's, Audit's, and Fiscal Section's copies should be returned to this office.

RECEIVED

JUN 20 1960

ASSOC. SOLICITOR
MINERAL RESOURCES

s/ George C. Selfridge

FROM SOLICITOR

JUN 20 1960

FOR SIGNATURE

Enclosures

WRGriswold/gla
6-17-60
cc to: Director's Reading File
Review Committee
Docket
Chron
Harold Kirkemo, USGS

43683

DRAFT
6/14/60
WRGriswold/gls

Docket copy

EXPLORATION PROJECT CONTRACT
NEW PARK MINING COMPANY
DOCKET NO. IMEA-4981

AMENDMENT NO. 7

It is agreed this _____ day of _____, 1960, between the United States of America, acting through the Department of the Interior, Office of Minerals Exploration, hereinafter called the "Government," and New Park Mining Company, hereinafter called the "Operator," that Exploration Project Contract No. Idm-21213 (Docket No. IMEA-4981), dated June 23, 1958, as amended, hereinafter called the "Contract," is further amended as follows, effective June 23, 1958:

PART ONE

WHEREAS, it has been found by experience to date, as verified by two audits by the Government, that the actual costs as provided for in the Contract far exceed the maximums allowed by the Contract, and there is small likelihood that the actual costs in the future could become significantly less than heretofore; and

WHEREAS, auditing, accounting, and contract administration costs would be greatly diminished by placing most items of work on a fixed unit cost basis;

NOW, THEREFORE, [illegible]

1. In Annex II, under the title "Article 13. Changes and added provisions," the following provision is added:

(f) In addition to the costs of work estimated in Exhibit "A" by categories of actual costs, the cost of work requirements specified in Exhibit "A" as "Fixed Unit Costs" are allowable costs of the project. The Govern-

[illegible]

[illegible]

[illegible]

ment will contribute to the fixed unit costs as work units are acceptably performed. A "Fixed Unit Cost" is an agreed price for each unit of work so performed regardless of costs incurred by the Operator. Costs set forth in Exhibit "A" include all allowable costs of the work to be performed under the Contract.

2. In "Exhibit A," the title, "Estimated Costs of the Project," is deleted with all material thereunder, and the following is substituted:

Estimated Costs of the Project 1/

Actual Costs:

Category (1) Independent Contracts

11,000 feet diamond drilling @ $4.15/ft. 2/ $49,850.00

Categories (2) Labor and Supervision

(3) Operating Materials & Supplies,

and

(7) Miscellaneous

None except:

Water disposal facilities 41,036.71*

Pumps and Pump column installation 32,807.53*

Categories (4) Operating Equipment

(5) Initial Repairs & Rehabilitation,

and

(6) New Buildings, Fixtures & Installations

None

and will conform to the first [illegible] as were made and satisfactorily performed. A "fixed fee bid" is an agreed price for each unit of work to performed regardless of costs incurred by the Contractor. Costs are fixed in Exhibit "A" including all allowable costs of the work to be performed under the contract.

II. In Exhibit "A" the sixty "Unclassified Units of the project" is defined with all necessary characteristics, and the following is contained:

Estimated Costs on the "Units"

Actual Costs

Category (A) [illegible]

1,000 feet diameter drilling & [illegible] $ [illegible]

Category (B) [illegible]

(2) [illegible]

and

(3) [illegible]

Same category

Other diameter drilling [illegible]

Same and [illegible]

Category (C) [illegible]

(4) [illegible]

and

(5) [illegible]

Same

(6) [illegible]

Same

Fixed Unit Costs:

Installation of water doors @ $980.00/ea.

Drifting and crosscutting @ $45.00/ft.

Timbering or setting of steel sets @ $11.00/ft.

Rockbolting @ $5.00/bolt

Timbered raising @ $46.00/ft.

Longhole drilling @ $1.00/ft.

Assaying @ $1.00/each determination

Incidental allowance 3/ for each foot of drilling completed @ $.35/ft. $481,185.74

Estimated Total Cost of the Project $564,880.00

Government Participation @ 50% $282,440.00

1/ An asterisk indicates a maximum in addition to the maximum set forth in the contract form.

2/ Includes all costs of drilling whatsoever except compressed air and water.

3/ For compressed air and water.

PART TWO

WHEREAS, it has been determined by actual practice that in certain instances the standard and customary use of mine timbers has proved inadequate for support of drifts and crosscuts, and that, instead of such timbering, steel ring sets are required; and

WHEREAS, while the steel ring sets involve a substantially greater expense than the usage of standard mine timbering, the added cost shall be for the Operator's sold account

[illegible]

[illegible]

[illegible]

NOW, THEREFORE,

In Exhibit "A" under the heading, Description of the Work, as amended by Amendments Nos. 2, 3, and 5, delete Item No. 3, and substitute the following:

3. Drifting and Crosscutting.

Drift and crosscut westerly on the 2005 level an estimated 6,000 feet. Also crosscut approximately 2,600 feet additional on the 2005 level and on the 800 level, to explore favorably mineralized areas and for diamond drill and long-hole percussion drill stations. The total of all drifting and crosscutting may not exceed 8,600 feet. The drifts and crosscuts initially shall be approximately 7 feet by 10 feet in rock section, but periodically the bottom two feet may be back filled in connection with construction of a drainage ditch. Drifts and crosscuts shall be supported as necessary using standard drift sets, steel ring sets, or rock bolts and head plates.

Executed in quintuplicate the day and year first above written.

THE UNITED STATES OF AMERICA

By_____
Acting Director, Office of
Minerals Exploration

NEW PARK MINING COMPANY

By_____

Title_____

[illegible]

[illegible]

[illegible]

UNITED STATES
DEPARTMENT OF THE INTERIOR
OFFICE OF MINERALS EXPLORATION
Building 20 - Federal Center
Denver 25, Colorado

May 20, 1960

Official
EXTRA COPY
O. M. E
RECEIVED MAY 23 1960

DATE	INITIALS	CODE
5/24	[illegible]	500
		225

Mr. Clark L. Wilson
Vice President
New Park Mining Company
904 Walker Bank Building
Salt Lake City, Utah

Re: Docket No. BMEA 4931
(Lead-Zinc-Copper)
Contract No. Idm-E1218
(Mayflower Mine)
Wasatch County, Utah

Dear Mr. Wilson:

Attached is a copy of an interim audit report and certificate dated May 9, 1960, prepared by Mr. Fisher relating to the subject contract.

Very truly yours,

Original signed by

Hugh M. Connors
Acting Field Officer, OME
Region III

Enclosure

cc: E. D. Talbert, Acting Chief
Contract Administration and Audit Division

MME Form 7
(10-58)

OFFICIAL FILE COPY

Date	Surname	Code
5/18	Fisher	800
5/18	gad	220
5/19	Freiwald	1500

MAY 18 1960

Memorandum

To: Acting Field Officer, Region III

From: E. D. Talbert, Acting Chief (Signed) E. D. Talbert
Contract Administration and Audit Division

Subject: Docket No. OMEA-4981 (Lead, Zinc, and Copper)
New Park Mining Company
Mayflower Mine
Wasatch County, Utah
Contract No. Idm-81218

Attached are the original and two copies of an interim audit report and certificate dated May 9, 1960, prepared by Mr. Fisher relating to the subject contract.

If you concur in the facts as stated in the report and certificate will you please make distribution as follows:

(a) Original to the Fiscal Section, Division of Administrative Services, Office of the Secretary, Department of the Interior, Washington 25, D. C.;

(b) One copy to the Operator; and

(c) One copy for your file.

As evidence of your concurrence, a copy of your letter transmitting the Operator's copy should be furnished this Division. If for any reason you do not concur, the original and both copies should be returned to this Division with your comments.

Attachments

CEFisher/ama
May 18, 1960

Copy to: Docket
Director's Reading File
CA & A Division
Mr. Rothrock, Room 7354, Interior

43683

UNITED STATES
DEPARTMENT OF THE INTERIOR
OFFICE OF MINERALS EXPLORATION
Building 20 - Federal Center
Denver 25, Colorado

May 3, 1960

OFFICIAL FILE COPY
O. M. E.
RECEIVED MAY 6 1960

DATE	INITIALS	CODE
5-6	gad	220
5/6	[illegible]	800
5/9	[illegible]	800

Mr. Clark L. Wilson
Vice President
New Park Mining Company
904 Walker Bank Building
Salt Lake City, Utah

Re: Docket No. IMEA 4981
(Lead-Zinc-Copper)
Contract No. Idm-X1218
(Mayflower Mine)
Wasatch County, Utah

Dear Mr. Wilson:

In reference to your request by letter of April 25, 1960, this confirms verbal concurrence by the Government for the drilling of percussion drill holes Nos. 6 - 16, inclusive, at the locations and attitudes indicated on the map attached to your request.

Very truly yours,

Acting Field Officer
Region III

Hugh M. Connors

cc: Fiscal Section, Div. of Adm. Services
Office of the Secretary, Depart. of Interior
Washington 25, D. C.

Amendment File, Region III

Chief, Div. of Field Operations (2)) W/copy
Hasler) Operator's
Correspondence File, Region III) request
Chron) April 25, 1960

OME
DEPARTMENT OF THE INTERIOR

Executive Officer, O.M.E.
D.M.E.A. Field Team Region III
224 New Custom House
Denver 2, Colorado

April 25, 1960

APR 27 1960
REGION III
DENVER, COLORADO

RE: Docket No. DMEA 4981 Contract E-1218
Longhole "Percussion" drilling.

Dear Sir:

Enclosed is 4 prints of the 2005 level, Mayflower Mine, showing the proposed location of long hole "percussion" drilling No. 6 through 16. The unnumbered holes on the print are the holes 1 through 5 which have already been approved.

Number 6 hole will be about 208 feet deep, the others will be up to 300 feet in depth. The final footage for each hole will depend on drilling conditions.

Long hole No. 4 has been completed. Detailed results will be given in the next DMEA report. From hole No. 4 the first hole drilled off the 2005 level, 4 mineralized areas were located and No. 6 long hole was directed to cut through the upper part of the Cdul limestone. To-date this hole has cut an ore body 36 feet in width that will assay about $25.00 per ton. Details will follow in the April monthly report.

You will note that holes #6 through #16 are so layed out to probe the hanging wall and foot wall to the Mayflower fissure zone. Each hole will be drilled on the basis of geology encountered in the previous hole, resulting in a planned geologic control drill programs. By using this system of drilling, it may be necessary to make minor changes in the direction and inclination of the proposed holes on the print.

Holes #9, 13, and 16 will probe the South fissure in the foot wall to the Mayflower fissure zone. Holes #6, 7, 8, 10, 11, 12, 14, and 15, will probe favorable geology in the Mayflower fissure system.

This drilling program is now underway, holes #4, and 6 have been completed, holes #1, 2, 3, and 5 will be drilled during the month of April.

Very truly yours,

NEW PARK MINING COMPANY

Gale A. Hansen
General Superintendent

GAH:jc

COPY

OFFICIAL FILE COPY O. M. E. RECEIVED APR 22 1960		
DATE	INITIALS	CODE
4-22	gad	VVO
4/22	Jclw57	800
4/26	[illegible]	500

Building 20 - Federal Center
Denver 25, Colorado

April 19, 1960

Mr. Carl Harper
New Park Mining Company
Keetley, Utah

Re: Docket No. DMEA-4981(Lead-zinc-copper)
Contract No. Idm-E1218
New Park Mining Company (Mayflower mine)
Wasatch County, Utah

Dear Mr. Harper:

The audit of the DMEA project accounts is scheduled to start Monday morning, April 25, 1960. It will be made by Mr. C. E. Fisher, from the Contract Administration and Audit Division, OME, Washington, D. C. Mr. Romslo, will meet Mr. Fisher in Salt Lake City and accompany him in performing the audit.

If, by any chance, Mr. Fisher cannot meet this date, Mr. Romslo, who will inspect the project during the planned audit period, will advise you at the earliest possible moment.

Very truly yours,

Original signed by

Hugh M. Connors
Acting Field Officer
OME, Region III

TMR/bjo

cc: Contract Adm. and Audit Div.
Chief, Div. of Field Operations
Corres.
Chron.

MME Form 27
(10-58)

OFFICIAL FILE COPY

Date	Surname	Code
4/15	Johnson	110
4-15	gad	VVO
		225
	WAS	321

APR 14 1960

Mr. Clark L. Wilson
Vice President
New Park Mining Company
1102 Ring Building
Washington 6, D. C.

Re: Docket No. DMEA-4981 (Lead-Zinc-Copper)
Contract No. Idm-E1218
New Park Mining Company
(Mayflower Mine)
Wasatch County, Utah

Dear Mr. Wilson:

Reference is made to your letter of April 5, 1960, regarding litigation with the United Steelworkers Union scheduled for a hearing on May 8.

As you are aware, the DMEA and OME long form exploration contracts may provide for payment of costs incurred for work performed under an independent contract on a unit-price basis, i.e., $6.00 per foot of diamond drilling, $40.00 per foot of drifting, etc., completed to meet specifications. However, a labor-footage contract such as you describe, and which is common in the mining industry, has never been included as an independent contract under the cost classification established for our program.

Sincerely yours,

(signed) FRANK E. JOHNSON (fel)
Acting Director

FEJohnson/bih
April 13, 1960
cc to: Docket
Dir. file
Dir. reading file
Solicitor
Mr. Johnson

43683

MME Form 7
(10-58)

OFFICIAL FILE COPY

Date	Surname	Code
4/13	Johnson	110
	Grimell	500
4/14	Selbridge	120
4/14	Gilbert	800
4/14	Gerson	140
4/14	Seller	110
		225

Mr. Clark L. Wilson
Vice President
New Park Mining Company
1102 Ring Building
Washington 6, D. C.

Re: Docket No. DMEA-4981 (Lead-Zinc-Copper)
Contract No. Idm-E1218
New Park Mining Company
(Mayflower Mine)
Wasatch County, Utah

Dear Mr. Wilson:

Reference is made to your letter of April 5, 1960, regarding litigation with the United Steelworkers Union scheduled for a hearing on May 8.

As you are aware, the DMEA and OME long form exploration contracts may provide for payment of costs incurred for work performed under an independent contract on a unit-price basis, i.e., $6.00 per foot of diamond drilling, $40.00 per foot of drifting, etc., completed to meet specifications. However, a labor-footage contract such as you describe, and which is common in the mining industry, has never been included as an independent contract under the cost classification established for our program. ~~Consequently, we have never been concerned when you entered into such labor-footage contracts.~~ FEJ

Sincerely yours,

Acting Director

FEJohnson/bih
April 13, 1960
cc to: Mails & Files
Dir. file
Dir. reading file
Solicitor
Mr. Johnson

43683

OFFICIAL FILE COPY
O. M. E.
RECEIVED APR 6 1960

DATE	INITIALS	CODE
4-6	gad	770
		~~170~~
4/6	EW	800
		500
		110

NEW PARK MINING COMPANY

KEETLEY, UTAH

SALT LAKE CITY OFFICE
904 WALKER BANK BUILDING

Reply to: 1102 Ring Building
Washington 6, D.C.

April 5, 1960

DMEA-4981
E 1218

Mr. Frank Johnson
Acting Director
Office of Minerals Exploration
Department of the Interior
Washington, D. C.

Dear Mr. Johnson:

As you know New Park Mining Co. leased a portion of its Mayflower mine to a group of independent contractors on October 3, 1957. This was prior to a New Park request for a DMEA loan that is currently being used in an exploration project from the lower level of the Mayflower shaft.

The company is currently engaged in litigation with the United Steelworkers Union and a trial is scheduled on May 8 to hear the conditions that led to our mine shutdown and subsequent lease. The attorney for the Union is making an intensive search to develop a case and apparently is trying to involve our DMEA application.

I believe he is trying to establish an employee-employer relationship rather than a company-independent contractor relationship.

Apparently he realizes that DMEA application form calls for discussion of independent contracts. You will recall that we did submit independent bids on diamond drilling. However this was not the case for drifting and cross-cutting as we are providing all of the supplies and equipment for this work and merely issue footage contracts to the independent contractors for the labor costs.

In preliminary discussions of this point with your staff, I understand that our procedure indicated above is normal experience under your rules and that there has never been any occasion for listing footage labor contracts as independent contracts.

Your confirmation of this procedure will be greatly appreciated.

Very truly yours,

Clark L. Wilson
Vice President

CLW/adr

Building 20 - Federal Center
Denver 25, Colorado

March 28, 1960

Memorandum

To: Mr. E. D. Talbert, Acting Chief,
Contract Administration and Audit Division, OME

From: Executive Officer, OME Field Team, Region III

Subject: Proposed On-site Audit of Project Accounts
Docket No. DMEA 4981 (Lead-zinc-copper)
Contract No. Idm-E1218
New Park Mining Company
(Mayflower Mine)
Wasatch County, Utah

In reference to the request in the last paragraph, first page, of your memorandum of March 15, 1960, enclosed are two copies of a distribution sheet showing breakdown of reported costs to work categories for the month of April 1959.

Original signed by

J. W. Townsend

Enclosures

JWT/bjo

cc: Chmn. Op. Comm. (1)
Hasler
OME/SLC
Corres.
Suspense
Chron.

Official
~~EXTRA~~ COPY
O. M. E.
RECEIVED MAR 31 1960
DATE | INITIALS | CODE
4/1 | | ~~500~~ 500

NEW PARK MINING COMPANY

P.O. Box 929
Park City, Utah

OME
DEPARTMENT OF THE INTERIOR
MAR 25 1960
REGION III
DENVER, COLORADO

March 21, 1960

Mr. J.W. Townsend
Executive Officer, OME
Field Team, Region III
Building 20 - Federal Center
Denver 25, Colorado

Re: Docket No. DMEA-4981 (Lead-zinc-copper)
Contract No. Idm -E-1218
New Park Mining Company (Mayflower Mine)
Wasatch County, Utah

Dear Mr. Townsend:

Enclosed please find a detailed sheet showing breakdowns to catagories of charges for the month of April, 1959.

Filed with 4-104

Please be advised that your date of or about April 25, 1960, will be satisfactory to us for the purpose of conducting an audit of the D.M.E.A. project accounts.

Yours very truly,

NEW PARK MINING COMPANY

Carl D. Harper

Carl D. Harper,
Chief Accountant

Official
~~EXTRA~~ COPY
O. M. E
RECEIVED MAR 31 1960

DATE	INITIALS	CODE

CDH:jc
Enclosures

Mr. Johnson -

Please re-consider the propriety of including the last sentence in your letter to Mr. Wilson, per our telephone conversation of this afternoon

Sellers 4/14/60

UNITED STATES
DEPARTMENT OF THE INTERIOR
OFFICE OF MINERALS EXPLORATION

Building 20 - Federal Center
Denver 25, Colorado

OFFICIAL FILE COPY O. M. E. RECEIVED APR 6 1960		
DATE	INITIALS	CODE
4-6	gad	VRO
4/6	[illegible]	800
	[illegible]	500

April 4, 1960

Memorandum

To: Chairman, Operating Committee, OME

From: Executive Officer, OME Field Team, Region III

Subject: Docket No. DMEA-4981 (Lead-zinc-copper)
Contract No. Idm-E1218
New Park Mining Company
(Mayflower Mine)
Wasatch County, Utah

Reference is made to your memorandum of April 1, 1960, regarding the position of the 1880 level face in reference to the land subordinated under the subject contract.

Information obtained by T. M. Romslo, Mining Engineer, Bureau of Mines, during his progress inspection of March 16, 1960, indicates that neither the 1880 level or any of the levels above the 1880 have reached the subordinated ground. The farthest advanced levels are the 1505 and 1630. These levels, which have been advanced a few hundred feet beyond the present face of the 1880 level, are short of the subordinated area by about 150 feet.

J. W. Townsend

J. W. Townsend

MME Form 7
(10-58)

OFFICIAL FILE COPY

Date	Surname	Code
3/31	Friously	500
4/1	GLS	130
4/1	Johnson	110
		~~120~~
4-1	gad	~~320~~
		500

APR 1 1960

Memorandum

To: Executive Officer, OME Field Team, Region III

From: Chairman, Operating Committee, OME

Subject: Docket No. DMEA-4981 (Lead-Zinc-Copper)
New Park Mining Company
Mayflower Mine
Wasatch County, Utah
Contract No. Idm-E1218

We have noted in the March 24 issue of the Mining Record an account of ores encountered recently in the cited mine. We have no means of knowing just what is the present position of the 1880 level face, but presumably it would be well advanced into the subordinated ground; please note the maps attached to the contract.

We would appreciate having any information available; perhaps a discreet inquiry might be in order.

/s/ George C. Selfridge (2HB)

APPROVED:

P. F. Yopes (2HB)
Member, Bureau of Mines

Harold Kirkemo (2HB)
Member, Geological Survey

WRGriswold/gla 3-31-60
cc to: Director's Reading File
Operating Committee
H. M. Callaway, USBM
Harold Kirkemo, USGS
Docket
Chron

43683

EXTRA COPY O. M. E RECEIVED MAR 23 1960		
DATE	INITIALS	CODE
3/23	C	220
"	Original	800

arq to 800

Building 20 - Federal Center
Denver 25, Colorado

March 21, 1960

Memorandum

To: E. D. Talbert, Acting Chief, Contract Administration and Audit Division

From: Executive Officer, OME Field Team, Region III

Subject: Proposed Visit of C. E. Fisher to Region III for Audit
Docket No. DMEA-4981 (Lead-zinc-copper)
Contract No. Idm-E1218
New Park Mining Company (Mayflower Mine)
Wasatch County, Utah

In reference to your memorandum of March 15, 1960, regarding the subject matter, the tentative date established is satisfactory to this office.

Unless future developments prevent it, T. M. Romslo, Mining Engineer, Bureau of Mines, will meet Mr. Fisher in Salt Lake City on April 25, or other date that you will confirm, to accompany him in performing the audit of the project account. Mr. Romslo will arrange for transportation from the General Services Administration Interagency Motor Pool.

In visiting Salt Lake City, Mr. Romslo generally stays at the New Grand Hotel, Seven East Fourth South Street, which is about a block from the source of transportation. There are no lodgings available at Keetley; therefore, the inspectors stay in Salt Lake City, which is only about 45 minutes distance from Keetley by car.

We have requested a copy of the operator's distribution sheet to work categories for the month of April 1959, which will be forwarded as soon as received. In addition, we will prepare and forward to you at an early date a list of projects on which we consider an audit of royalty payments is desirable.

Please confirm the time and date of Mr. Fisher's arrival in Salt Lake City.

Original signed by

J. W. Townsend

jo

Chrn. Op. Comm. (2) Corres.
Hasler Suspense Chron.

EXTRA COPY
O. M. E.
RECEIVED MAR 1960
DATE

Building 20 - Federal Center
Denver 25, Colorado

March 21, 1960

Mr. Carl Harper
New Park Mining Company
Kaetley, Utah

Re: Docket No. DMEA-4981 (Lead-zinc-copper)
Contract No. Idm-X1218
New Park Mining Company (Mayflower Mine)
Wasatch County, Utah

Dear Mr. Harper:

We have been informed that it is tentatively planned for an auditor from the Contract Administration and Audit Division, OME, Washington, D. C., to visit your office about April 25, 1960, for the purpose of conducting an audit of the DMEA project accounts. Please advise as to whether or not the auditor's visit at that time will be satisfactory to you. You will be further advised when the exact date of his visit is known.

In conjunction with a pre-audit review of the project accounting reports, it will be appreciated if you will forward a detailed sheet showing a breakdown to work categories of charges for the month of April 1959. The desired distribution sheet is similar to that forwarded with the May 1959 and subsequent reports.

Very truly yours,

Original signed by

J. W. Townsend
Executive Officer, OME
Field Team, Region III

JWT/bjo

cc: Contract Adm. and Audit Div.
Chrm. Op. Comm. (2)
Hasler
OME/SIC
Corres.
Susp.
Chron.

MME Form 7
(10-58)

DMEA-4981 (Docket)

OFFICIAL FILE COPY

Date	Surname	Code
3/16	gad	VVO
"	[illegible]	100

MAR 15 1960

Memorandum

To: Executive Officer, OME Field Team, Region III

From: E. D. Talbert, Acting Chief (Signed) E. D. Talbert
Contract Administration and Audit Division

Subject: Proposed Visit of C. E. Fisher to Region III

Present plans contemplate having Clarence E. Fisher, auditor representative of this Division, stop over at Salt Lake City and Denver enroute to Washington, D. C., from an audit assignment in Region II. He is tentatively scheduled to arrive in Salt Lake City via the California Zephyr on Monday, April 25.

The purpose of his stopover at Salt Lake City is an interim audit of contract Idm-81218, docket DMEA-4981, New Park Mining Company. Such an audit seems appropriate at this time as it has been about a year since the last audit and budgetary funds for travel during the next fiscal year will be even more restricted than during this year.

Upon completion of this interim audit it is planned for Mr. Fisher to proceed to Denver for the purpose of consulting with you as to his audit findings, arranging for disposition of the audit workpaper files now in the custody of the authorized Certifying Officer, and making royalty reviews as deemed appropriate.

It would be appreciated if you would advise the New Park Mining Company of the planned audit. Also, there are a number of items on which this Division would appreciate your advice. Can Mr. Fisher anticipate that an engineer will accompany him to the Operator's office at Keetley? If so, whom should he contact on arrival in Salt Lake City? If not, is it possible to make a BuMines automobile available for his use? If neither an engineer can accompany him nor an automobile is available, is public transportation available? Are lodgings available in Keetley?

There is one other question relative to the New Park Mining contract. The Washington office copies of the April 1959 MF-104 do not include an attachment, as do all subsequent forms MF-104, showing the allocation of claimed costs to the several work items under the contract. This report is needed in the audit preparatory work; therefore, it would be appreciated if you would furnish a copy of the attachment

Received 3/31/60

43683

to this Division. If your files do not include this attachment, please request the Operator for a copy.

Please also advise if the time of the proposed visit to your office is satisfactory, as well as your recommendations as to the contracts in particular need of royalty review.

EDTalbert/ama
March 15, 1960

Copy to: Mails and Files
Director's Reading File
CA & A Division
Mr. T. A. Christensen, Region III
E1218 (CA&A file)
DMEA-4931 (Docket)
Mr. Fisher

OFFICIAL FILE COPY
O. M. E.
RECEIVED DEC 7 1959

DATE	INITIALS	CODE
12-7	gad	1120
12/7	[illegible]	800
"	[illegible]	500

Building 20 - Federal Center
Denver 25, Colorado
December 3, 1959

Mr. Clark L. Wilson
Vice-President
New Park Mining Company
904 Walker Bank Building
Salt Lake City, Utah

Re: Docket No. DMEA 4981 (Lead-Zinc-Copper)
Contract No. Idm-M1218
New Park Mining Company
(Mayflower mine)
Wasatch County, Utah

Dear Mr. Wilson:

Enclosed is the Operator's copy of Amendment No. 6 which has been executed to clarify the extent of work involved in conjunction with installation of pump column and pumps under work item 2.

Very truly yours,

Original signed by

J. W. Townsend
Executive Officer, OME
Field Team, Region III

Enclosure

JWT:ltm

cc: Chmn. Op. Comm. (2) w/Govt's & Aud. copy of Amend.
Finance Off. Reg. III) w/cpy Amend.
Hasler)
OME/SLC)
Corres. file, Reg. III)
Susp.
Chron.

OFFICIAL FILE COPY
O. M. E.
RECEIVED DEC 7 1989

DATE	INITIALS

MME Form 7
(10-58)

OFFICIAL FILE COPY

Date	Surname	Code
11/13	Griswold	500
11/13	Tolfutt	800
11/17	GCS	130
11/27	Johnson	110
11-27	gad	220
		500

NOV 27 1959

Memorandum

To: Executive Officer, OME Field Team, Region III

From: Chairman, Operating Committee, OME

Subject: Docket No. IMEA-4981 (Lead-Zinc-Copper)
New Park Mining Company
Mayflower Mine
Wasatch County, Utah
Contract No. Idm-E1218

As recommended in your October 29 memorandum, we have prepared a clarifying amendment covering rock excavation under the cited project, for pump installation and sump. The original and four copies (2 pages each) of a proposed Amendment No. 6 are enclosed. All copies have been signed by the Acting Director for the Government.

If the amendment meets with your approval, kindly present it to the Operator for approval and signature and, when completed, distribute all the copies in the usual manner. Otherwise, and if any proposed changes should lie beyond your delegated authority, all copies should be returned to us with your recommendations.

Also enclosed are two extra copies of the amendment for the use of the Field Team.

Kindly pardon us for not having sent you a teletype as requested in your memorandum. At times it is not feasible to anticipate a final action.

/s/ George C. Selfridge (246)

Enclosures

Frank D. Lamb (246)
Member, Bureau of Mines

Harold Kirkemo (246)
Member, Geological Survey

WRGriswold/gla 11-13-59
cc to: Director's Reading File
Operating Committee
Mr. Bishop, USBM
Mr. Kirkemo, USGS
Docket
Chron

436

MME Form 7
(10-58)

SOLICITOR

NOV 6 - 1959

INTERIOR DEPT.

RECEIVED

NOV 6 - 1959

ASSOC. SOLICITOR
MINERAL RESOURCES

OFFICIAL FILE COPY

Date	Surname	Code
11/5		500
		140

November 5, 1959

Memorandum

To: Associate Solicitor
Division of Minera l Resources

From: W. R. Griswold, Chief
Division of Minerals

Subject: Docket No. DMEA-4981 (Lead-Zinc-Copper)
New Park Mining Company
Mayflower Mine
Wasatch County, Utah
Contract No. Idm-E1218

FROM SOLICITOR
NOV 12 1959
FOR SIGNATURE

Will you kindly prepare an Amendment No. 6 to the cited contract, along the following lines:

AMENDMENT NO. 6

FROM SOLICITOR
NOV 12 1959
FOR SIGNATURE

It is agreed this _____ day of _____, 1959, between the United States of America, acting through the Department of the Interior, Office of Minerals Exploration, hereinafter called the "Government," and New Park Mining Company, hereinafter called the "Operator," that Exploration Project Contract No. Idm-E1218 (Docket No. DMEA-4981), dated June 23, 1958, as amended, hereinafter called the "Contract," is further amended as follows, effective June 23, 1958:

In Exhibit "A," under the heading Description of the Work, Item No. 2, amended by Amendment No. 1, is further amended to read as follows:

2. Pumps and pump column installation

Install a twelve-inch steel water column from the new 2005 level to the 1630 level. From the 1630 level to the 800 (drainage tunnel) level, install a ten-

4368

inch steel water column; install two 350HP pumps on the 1630 level; install two 450 HP submersible pumps on the 2005 level; and make the necessary rock excavations on the 2005 level for pump installation and adequate sump.

This Amendment shall not be construed to increase the estimated total cost of the project, the aggregate amount which the Government may be required to contribute, nor the amount of any item designated as maximum.

Executed in quintuplicate the day and year first above written.

THE UNITED STATES OF AMERICA

By_____
Acting Director, Office of
Minerals Exploration

NEW PARK MINING COMPANY

By_____

Title_____

UNITED STATES
DEPARTMENT OF THE INTERIOR
OFFICE OF MINERALS EXPLORATION
Building 20 - Federal Center
Denver 25, Colorado
October 29, 1959

OFFICIAL FILE COPY
O. M. E.
RECEIVED NOV 2 1959

DATE	INITIALS	CODE
11-2	gad	220
		130
"	Resolved	500

Memorandum

TO: Chairman, Operating Committee, OME

From: Executive Officer, OME Field Team, Region III

Subject: Docket No. DMEA 4981 (Lead-Zinc-Copper) Contract No. Idm-E1218
New Park Mining Company (Mayflower mine) Wasatch County, Utah

In reference ot your memoranda of August 18 and September 11, 1959, enclosed are the original and two copies of the Operator's letter of October 27, 1959, with attached cost breakdown sheets and map pertaining to the sump work in conjunction with installation of the pump column and pumps under work Item No. 2 of the contract.

So that you will have complete information as to costs of the work reported from June 23, 1958 to October 1, 1959, enclosed are one copy each of Forms MF-104 and MF104A submitted by the Operator for the months of August and September 1959. The reports have been deferred from processing pending receipt of revised cost breakdown sheets from the Operator. A copy of the Operator's supplementary Forms MF-104 and MF-104A for the period from June 23, 1958 to March 31, 1959, which has not been processed was forwarded to you by my memorandum of September 2, 1959.

It is recommended that a clarifying amendment be prepared so that the Government can participate in the costs of the sump work performed subsequent to June 23, 1959.

Since the question has been raised as to the allowability of the sump work costs under the contract as it is presently written, the applicable costs reported for August and September 1959 will be suspended pending resolution of the matter.

It is noted in the Operator's breakdown of costs that sump excavation was itemized up to March 31, 1959 for 7,912 cubic feet, but a breakdown between preparation of sump and installation of pumps under item 2 of the cost breakdown was not given for the 4,261 cubic feet of sump excavation subsequent to March 31, 1959. If a breakdown of the latter is necessary, please advise and I will request the information from the Operator; otherwise, I hesitate to request the information if it is not necessary.

Advice by teletype as to your decision will be appreciated.

J. W. Townsend

W O.

NEW PARK MINING COMPANY

KEETLEY, UTAH

SALT LAKE CITY OFFICE
904 WALKER BANK BUILDING

October 27, 1959

Mr. J. W. Townsend, Executive Officer
O.M.E., Field Team Region III
Building 20
Federal Center
Denver, Colorado

OME
DEPARTMENT OF THE INTERIOR
OCT 28 1959
REGION III
DENVER, COLORADO

Re: Docket No. DMEA 4981
Contract No. Idm E-1218

Dear Mr. Townsend:

This letter will refer to your letter of September 17, requesting additional information on work and cost breakdowns for items submitted as additional costs acceptable for projects 1, 2 and 3, of the above referenced contract.

I am enclosing a set of sketches that indicate both in plan and section the excavation on the 2005 level prior to and subsequent to July 1, 1958. Section B-B' shows the additional depth in the sump to allow a deeper placement of the pumps and fully utilize the sump storage area.

Under the date of August 18, 1959, Mr. Gale Hansen indicated a breakdown of itemized costs.

I trust this is the information you require, but if there are any questions we will be glad to submit further information.

Very truly yours,

Clark L. Wilson

CLARK L. WILSON,
Vice President

CLW:ih

DESERET NEWS
Salt Lake Telegram
SALT LAKE CITY, UTAH. New Park MONDAY, MAY 16, 1960

E 1218

Federal Court Issues Ruling In Park City Mining Dispute

The Federal District Court ruled partly in favor of the United Steelworkers Monday in its long legal battle against the New Park Mining Co.

The ruling affects operation of the Keetley Mine at Park City which has been operating for more than two years under a lease arrangement after the mine closed down.

The ruling, by Judge A. Sherman Christenson, was to the effect that the mine had closed down in good faith, but that it wasn't a clean break. He ruled that the management continued to exercise substantial control.

Judge Christenson had previously ruled against the union, but the case had been referred back by the 10th Circuit Court of Appeals in Denver, Colo., for determination of this point.

The union had contended that the closing down of the mine was a subterfuge to abrogate the union contract. The company position is that it was compelled to close down because it couldn't operate profitably after lead and zinc prices became depressed.

After the closing the mine was leased to former employes under the Mayflower Lease. It has been operated successfully since, and the manager, Leo Hatch, said the men have been making better than union wages.

About 80 men are working the mine now, compared with 170 at the time the mine closed down Sept. 27, 1957.

A few months before that, the union and management had signed a contract to run until June 30, 1958.

In its original court action the union sought a declaratory judgment compelling the company to arbitrate grievances, and declaring the leasing arrangement invalid. It also sought back wages and vacation pay.

The contract has since expired, so its resumption is no longer a factor, according to Judge Christenson. The point in question is whether the former workers should get back vacation pay and wages. Judge Christenson's ruling Monday apparently opened the door for further court action.

in that first Basilio fight last Aug. 28 in San Francisco.

Basilio has held out for 30 per cent of both the TV $100,000 and the gate (which should go over $100,000 but which could go to $215,000 if all goes that well).

Fullmer, the champion, was entitled to more. He asked (and will receive) 40 per cent.

Usually fighters divide, by various splits, the 60 per cent, leaving 40 per cent for the promotion. But the promotion (Norm Rothschild and the Intermountain Boxing Club) will get 30 per cent. And should make money at that.

* * *

After Fullmer had knocked out Basilio in that Cow Palace classic, it was believed that Basilio should never fight Fullmer again. It was argued that a good middleweight could always whip a good welterweight and in this instance it was true.

But some attitudes have changed since Fullmer has put his title on the block against Spider Webb and Joey Giardello —considered the two best in their challenging ranks.

* * *

Neither came up with much. Webb acted as if he were afraid of Fullmer and possibly was. Giardello butted himself into a draw but lost the chance to get the title. Nor so long as Fullmer wears the crown will Giardello ever get another chance at it.

Best Of The Three

Of the three Basilio was the best man, did more damage to Fullmer than the others, staged a more inter-
ht.
o had to come back and try

different Basilio. Carmen has
fights since then, has movies
t.
ned that you can't run into
d jabbed off. Webb and Giar-
Basilio's style Basilio is ex-
from his own case, too.

different from the last one—
this reason it might be differ-

goes to Seattle and Vancouver to Spokane.

And the Bees will undoubtedly be happy to be home after their 17-day, 16-game sojourn among the hostiles. They posted a 7-9 road record, thanks to the one-runners and Phillips' timely hitting, reside in seventh just four games off the pace.

Maybe an official look at their '59 pennant will turn the trick.

A lot of the area's baseball "celebrities" will be on hand Monday to help get the huge pennant streamed from the centerfield flagpole. All ex-Bees and ex-big leaguers will be special guests of the Bees with the Hive's executive committee, the champions back from last year due to participate in the ceremony.

The whole thing gets under way at 8 o'clock.

Then Bee Skipper Larry Shepard will wheel out his Long Tom and open what he hopes will be a successful barrage against the Sacs, whom the Bees are meeting for the first time this season. Long Tom (Parsons), one of the most successful of Bee servers to date, gets the pitching call against the

DESERET NEWS
Salt Lake Telegram
SALT LAKE CITY, UTAH MONDAY, MAY 16, 1960

Federal Court Issues Ruling In Park City Mining Dispute

The Federal District Court ruled partly in favor of the United Steelworkers Monday in its long legal battle against the New Park Mining Co.

The ruling affects operation of the Keetley Mine at Park City which has been operating for more than two years under a lease arrangement after the mine closed down.

The ruling, by Judge A. Sherman Christenson, was to the effect that the mine had closed down in good faith, but that it wasn't a clean break. He ruled that the management continued to exercise substantial control.

Judge Christenson had previously ruled against the union, but the case had been referred back by the 10th Circuit Court of Appeals in Denver, Colo., for determination of this point.

The union had contended that the closing down of the mine was a subterfuge to abrogate the union contract. The company position is that it was compelled to close down because it couldn't operate profitably after lead and zinc prices became depressed.

After the closing the mine was leased to former employes under the Mayflower Lease. It has been operated successfully since, and the manager, Leo Hatch, said the men have been making better than union wages.

About 80 men are working the mine now, compared with 170 at the time the mine closed down Sept. 27, 1957.

A few months before that, the union and management had signed a contract to run until June 30, 1958.

In its original court action the union sought a declaratory judgment compelling the company to arbitrate grievances, and declaring the leasing arrangement invalid. It also sought back wages and vacation pay.

The contract has since expired, so its resumption is no longer a factor, according to Judge Christenson. The point in question is whether the former workers should get back vacation pay and wages. Judge Christenson's ruling Monday apparently opened the door for further court action.

New Park
E 1218
DMEA-4981

Chief, Division of Field Operations

DESERET NEWS
Salt Lake Telegram
SALT LAKE CITY, UTAH MONDAY, MAY 16, 1960

Federal Court Issues Ruling In Park City Mining Dispute

The Federal District Court ruled partly in favor of the United Steelworkers Monday in its long legal battle against the New Park Mining Co.

The ruling affects operation of the Keetley Mine at Park City which has been operating for more than two years under a lease arrangement after the mine closed down.

The ruling, by Judge A. Sherman Christenson, was to the effect that the mine had closed down in good faith, but that it wasn't a clean break. He ruled that the management continued to exercise substantial control.

Judge Christenson had previously ruled against the union, but the case had been referred back by the 10th Circuit Court of Appeals in Denver, Colo., for determination of this point.

The union had contended that the closing down of the mine was a subterfuge to abrogate the union contract. The company position is that it was compelled to close down because it couldn't operate profitably after lead and zinc prices became depressed.

After the closing the mine was leased to former employes under the Mayflower Lease. It has been operated successfully since, and the manager, Leo Hatch, said the men have been making better than union wages.

About 80 men are working the mine now, compared with 170 at the time the mine closed down Sept. 27, 1957.

A few months before that, the union and management had signed a contract to run until June 30, 1958.

In its original court action the union sought a declaratory judgment compelling the company to arbitrate grievances, and declaring the leasing arrangement invalid. It also sought back wages and vacation pay.

The contract has since expired, so its resumption is no longer a factor, according to Judge Christenson. The point in question is whether the former workers should get back vacation pay and wages. Judge Christenson's ruling Monday apparently opened the door for further court action.

New Park
E 1218

OFFICIAL FILE COPY
O. M. E.
RECEIVED MAY 31 1960

DATE	INITIALS	CODE

OME
DEPARTMENT OF THE INTERIOR
OCT 28 1959
REGION III
DENVER, COLORADO

Mr. J.W. Townsend
Executive Officer, OME
D.M.E.A. Field Team Region III
224 New Customhouse
Denver 2, Colorado

October 20, 1959

Re: Docket No. DMEA 4981 - Contract E-1218
See Item No. 2 - Supplementary Accounting
Report of August 21, 1959.

Dear Sir:

As requested by your letter of September 17, 1959, we are sending you a sketch of the 2005 Sump showing the extent of excavation made before and after the start of the D.M.E.A. Contract.

Our records and measurements show the volume of excavation as follows:

Prior to July 1, 1958	9,776	Cubic Feet
July 1, 1958 to March 31, 1959	7,912	Cubic Feet
April 1, 1959 to October 1, 1959	4,261	Cubic Feet
Total Excavation	21,949	Cubic Feet

We are also enclosing a breakdown of the costs as reported under Item No. 2 of the supplementary accounting report of August 21, 1959. This breakdown shows costs of excavation in relation to other costs of Item No. 2 during the period from June 23, 1958 to March 31, 1959 - the period coverd by the supplementary accounting report.

Enclosed are the 2005 Sump sketch and the cost breakdown.

Very truly yours,

NEW PARK MINING COMPANY

By Gale A. Hansen
Gale A. Hansen
General Superintendent

GAH:jc

NEW PARK MINING COMPANY
D.M.E.A. ITEMIZED COSTS
SUPPLEMENTAL REPORT UNIT #2
JUNE 23, 1958 - MARCH 31, 1959

OME
DEPARTMENT OF THE I
OCT 28 1959
REGION III
DENVER, COLORADO

Itemized Costs - 6/23/58 to 3/31/59

1. Sump Excavation - - 7912 - Ft^3

Labor - - - - -	$1522.35
Explosives - - -	262.87
Bits and Steel -	193.87
Total	$1979.09 = 25 c/yd³

2. Preparation of Sump and installation of pumps on 2005 level.

Labor - - - - - - - - - - -	$3740.00
Timber - - - - - - - - - - -	235.16
Steel Rails - - - - - - - - -	250.80 ?
Labor (Shops and Surface) -	880.00 ?
Supplies and Material - - -	122.31
Total	$5228.27

3. Preparation of Shaft and installation of Pump Column.

Labor - Shaft preparation - - -	$2449.00
Labor - Installing Pump Column -	3374.00
Total	$5823.00

4. Labor - Installing Power Cable in Shaft.

Installing - - - -	$ 832.00
Shops and Surface -	16.00
Total	$ 848.00

5. Cost of Pump Column and Electrical Equipment.

932' - 10" Pump column was installed between 800 and 1630 levels

581' - 12" Pump column was installed between 1630 and 2005 levels

1500' - 2-0 3c. Elect. cable installed from 800 to 2005 levels

Cost of 10" Pump column and fittings - - - -	$ 9,134.55
Cost of 12" Pump column and fittings - - - -	4,899.70
Cost of 2-0 Elect. cable and misc. elect. equipment and fittings - - - - - - - - - - - -	6,326.13
Total Material Cost	$20,360.38
	+ 13,878.36
Total Cost	$34,238.74

Form MP-104 (Rev.)
(April 1953)

Budget Bureau No. 42-R102

UNITED STATES
DEPARTMENT OF THE INTERIOR
DEFENSE MINERALS EXPLORATION ADMINISTRATION

OPERATOR'S MONTHLY REPORT AND VOUCHER

Month of August, 1959 Docket No. DMEA 4981 Contract No. E-1218
Operator's Name New Park Mining Company Minerals Lead, Zinc and Copper
Address 907 Walker Bank Building, Salt Lake City, Utah
Contract Amount, $ 564,880.00 Government Participation: 50 % Amount, $ 282,440.00

ITEMS OF COSTS	FOR OPERATOR'S USE			FOR GOVERNMENT USE ONLY		
	Monthly Total	Totals Previously Reported	Totals To Date	Approved Monthly Total	Approved Totals Previously Reported	Approved Totals To Date
(1) Independent Short Form Contracts:						
Drilling						
Bulldozing						
Crosscutting						
Drifting						
(2) Labor and Supervision:						
Labor	2,972.85	42,434.99	45,407.84			
Supervision	650.00	8,300.00	8,950.00			
Technical Services						
(3) Operating Mat'ls. and Supplies:						
Timber	321.38	1,533.53	1,854.91			
Explosives	259.78	3,613.79	3,873.57			
Pipe	74.82	14,546.73	14,621.55			
Track	46.90	615.31	662.21			
Pipe Column @ 50%		8,154.44	8,154.44			
Supplies	389.18	7,863.29	8,252.47			
(4) Operating Equipment:						
~~Rental~~ Power	1,800.76	9,736.53	11,537.29			
Purchase						
Depreciation	1,238.40	5,752.26	6,990.66			
(5) Initial Rehabilitation and Repairs						
(6) New Bldgs., Improvements, etc.						
(7) Miscellaneous:						
Repairs to Equipment	53.44	392.50	445.94			
Sampling and Analysis						
Payroll Taxes						
Liability Insurance						
Accounting	250.00	3,150.00	3,400.00			
Fringe Benefits	224.91	3,520.69	3,745.60			
(8) Contingencies (specify):						
TOTALS	8,282.42	109,614.06	117,896.48			

OME
DEPARTMENT OF THE INTERIOR
OCT 21 1959
REGION III
DENVER, COLORADO

OME
DEPARTMENT OF THE INTERIOR
OCT 1 1959
REGION III
DENVER, COLORADO

I certify that the above bill is correct and just and that payment therefor has not been received.

Date 9-15-59 Payee New Park Mining Company

Per [signature] Title Vice President

* When a voucher is signed or receipted in the name of a company or corporation, the name of the person writing the company or corporate name, as well as the capacity in which he signs, must appear. For example: "John Doe Company, per John Smith, Secretary," or "Treasurer," as the case may be.

NOTE.—Title 18, U. S. Code (Crimes), section 1001, makes it a criminal offense to make a willfully false statement or representation to any department or agency of the United States as to any matter within its jurisdiction.

(Instructions on reverse)

Pursuant to authority vested in me, I certify that this account is correct and proper for payment in the amount of:

$

Signature
(Authorized Certifying Officer)

Date Vou. No.
(See other side)

Form MF-104A
(April 1952)

Budget Bureau No. 42R1861.2

UNITED STATES
DEPARTMENT OF THE INTERIOR

DEFENSE MINERALS EXPLORATION ADMINISTRATION

OPERATOR'S UNIT COST AND PROGRESS REPORT

Month of August 1959 Docket No. DMEA 4981 Contract No. E-1218

Operator's Name New Park Mining Company Minerals Lead, Zinc, and Copper

Address 907 Walker Bank Building, Salt Lake City, Utah

OPERATION	Unit	Costs This Month	Units This Month	Costs to Date	Units to Date	Unit Costs to Date	Authorized by Contract: Units	Authorized by Contract: Unit Costs
#3 Drifting	feet	6,066.43	67	50,955.92	725½	70.24	8,600	45.00
Crosscutting Timbering	feet	1,238.75	40	1,238.75	40	30.97		11.00
Raising								
#2 Shafts Pumps & Column	feet	977.24	None	24,665.10	1513	16.30	1,660	
Winzes								
Drilling: Core								
Churn								
Auger								
Stripping								
Trenching								
Test Pits								
Roads and Trails								
#1 - 16" Transite Pipe	feet	None	None	41,036.71	7149½	5.74	7,140	
Total Distributed Costs		8,282.42		117,896.48				Total Costs Authorized by Contract
Operating Equipment Purchased								
Initial Rehabilitation and Repairs								
New Buildings, Improvements, etc.								
Total Costs		8,282.42		117,896.48				

The undersigned company, and the official executing this certification on its behalf, hereby certify that the information contained in this report is correct and complete to the best of their knowledge and belief.

Date 9-15-59 Operator New Park Mining Company

Per [signature] Title Vice President

Remarks:

OME
DEPARTMENT OF THE INTERIOR
OCT 21 1959
REGION III
DENVER, COLORADO

NOTE—Title 18, U. S. Code (Crimes), section 1001, makes it a criminal offense to make a willfully false statement or representation to any department or agency of the United States as to any matter within its jurisdiction.

(Instructions on reverse)

(For Government use only)

Form MF-104 (Rev.)
(April 1959)

Budget Bureau No. 63-[illegible]

UNITED STATES
DEPARTMENT OF THE INTERIOR
DEFENSE MINERALS EXPLORATION ADMINISTRATION

OPERATOR'S MONTHLY REPORT AND VOUCHER

Month of September, 1959 Docket No. DMEA 4981 Contract No. E-1218
Operator's Name New Park Mining Company Minerals Lead, Zinc and Copper
Address 907 Walker Bank Building Salt Lake City, Utah
Contract Amount, $564,880.00 Government Participation: 50 % Amount, $ 282,440.00

ITEMS OF COSTS	FOR OPERATOR'S USE			FOR GOVERNMENT USE ONLY		
	Monthly Total	Totals Previously Reported	Totals To Date	Approved Monthly Total	Approved Totals Previously Reported	Approved Totals To Date
(1) Independent Short Form Contracts:						
Drilling						
Bulldozing						
Crosscutting						
Drifting						
(2) Labor and Supervision:						
Labor	1,659.80	45,407.84	47,067.64			
Supervision	650.00	8,950.00	9,600.00			
Technical Services						
(3) Operating Mat'ls. and Supplies:						
Timber	1,147.55	1,854.91	3,002.46			
Explosives	86.98	3,873.57	3,960.55			
Pipe		14,621.55	14,621.55			
Track		662.21	662.21			
Pipe Column @ 50%		8,154.44	8,154.44			
Supplies	13.00	8,252.47	8,265.47			
(4) Operating Equipment:						
~~Rental~~ Power	485.60	11,537.29	12,022.89			
Purchase						
Depreciation	1,238.40	6,990.66	8,229.06			
(5) Initial Rehabilitation and Repairs						
(6) New Bldgs., Improvements, etc.						
(7) Miscellaneous:						
Repairs to Equipment	670.20	445.94	1,116.14			
Sampling and Analysis						
Payroll Taxes						
Liability Insurance						
Accounting	250.00	3,400.00	3,650.00			
Fringe Benefits	176.30	3,745.60	3,921.90			
(8) Contingencies (specify):						
TOTALS	6,377.83	117,896.48	124,274.31			

OME
DEPARTMENT OF THE INTERIOR
OCT 23 1959
REGION III
DENVER, COLORADO

I certify that the above bill is correct and just and that payment therefor has not been received.

Date 10-15-59 Payee New Park Mining Company

Per [signature] Title Vice President

* When a voucher is signed or receipted in the name of a company or corporation, the name of the person writing the company or corporate name, as well as the capacity in which he signs, must appear. For example: "John Doe Company, per John Smith, Secretary," or "Treasurer," as the case may be.

NOTE.—Title 18, U. S. Code (Crimes), section 1001, makes it a criminal offense to make a willfully false statement or representation to any department or agency of the United States as to any matter within its jurisdiction.

(Instructions on reverse)

Pursuant to authority vested in me, I certify that this account is correct and proper for payment in the amount of:

$

Signature
(Authorized Certifying Officer)

Date Vou. No.
(See other side)

Form MV-10AA
(April 1952)

Budget Bureau No. 42-R1192.2

UNITED STATES
DEPARTMENT OF THE INTERIOR

DEFENSE MINERALS EXPLORATION ADMINISTRATION

OPERATOR'S UNIT COST AND PROGRESS REPORT

Month of September 1959 Docket No. DMEA 4981 Contract No. E-1218

Operator's Name New Park Mining Company Minerals Lead, Zinc and Copper

Address 907 Walker Bank Building Salt Lake City, Utah

OPERATION	UNIT	COSTS THIS MONTH	UNITS THIS MONTH	COSTS TO DATE	UNITS TO DATE	UNIT COSTS TO DATE	AUTHORIZED BY CONTRACT Units	AUTHORIZED BY CONTRACT Unit Costs
#3 Drifting	feet	3,131.45	None	54,087.37	725½	74.55	8,600	45.00
~~Crosscutting~~ Timbering	feet	1,339.75	61	2,578.50	101	25.53		11.00
#4 Raising	feet	625.04	13	625.04	13	48.08		
#2 ~~Shafts~~ Pumps & Column	feet	1,281.59	None	25,946.69	1513	17.15	1,660	
Winzes								
Drilling: Core								
Churn								
Auger								
Stripping								
Trenching								
Test Pits								
Roads and Trails								
#1 - 16" Transite Pipe	feet	None	None	41,036.71	7149½	5.74	7,140	
TOTAL DISTRIBUTED COSTS		6,377.83		124,274.31				TOTAL COSTS AUTHORIZED BY CONTRACT
Operating Equipment Purchased								
Initial Rehabilitation and Repairs								
New Buildings, Improvements, etc.								
TOTAL COSTS		6,377.83		124,274.31				

The undersigned company, and the official executing this certification on its behalf, hereby certify that the information contained in this report is correct and complete to the best of their knowledge and belief.

Date 10-15-59 Operator New Park Mining Company

Per [signature] Title Vice President

NOTE.—Title 18, U. S. Code (Crimes), section 1001, makes it a criminal offense to make a willfully false statement or representation to any department or agency of the United States as to any matter within its jurisdiction.

REMARKS:

OME
DEPARTMENT OF THE INTERIOR
OCT 2 - 1959
REC
DENVER COLORADO

(Instructions on reverse)

(For Government use only)

UNITED STATES
DEPARTMENT OF THE INTERIOR
OFFICE OF MINERALS EXPLORATION
Building 20 - Federal Center
Denver 25, Colorado
October 28, 1959

Memorandum

TO: Chairman, Operating Committee, OME

From: Executive Officer, OME Field Team, Region III

Subject: Docket No. DMEA 4981 (Lead-Zinc-Copper) Contract No. Idm-E1218
New Park Mining Company (Mayflower mine) Wasatch County, Utah

Enclosed are two copies of the Operator's letter of October 21, 1959, which is in reference to the comments on the rate of drift advance in your memorandum of October 9, 1959, and the letter to the Operator from this office dated October 12, 1959.

J. W. Townsend

J. W. Townsend

OFFICIAL FILE COPY
O. M. E.
RECEIVED OCT 30 1959

DATE	INITIALS	CODE
10/30	gad	VVO
10/30	[illegible]	FOO

W.O.

NEW PARK MINING COMPANY

KEETLEY, UTAH

SALT LAKE CITY OFFICE
904 WALKER BANK BUILDING

October 21, 1959

Mr. J. W. Townsend, Executive Officer
O.M.E. Field Team, Region III
Building 20
Federal Center
Denver, Colorado

OME
DEPARTMENT OF THE INTERIOR
OCT 23 1959
REGION III
DENVER, COLORADO

Re: Docket No. DMEA 4981
Contract No. Idm E-1218

Dear Mr. Townsend:

I wish to acknowledge your letter of October 12, and thank you for your interest in the rate of drift advance on the above referenced contract.

As you know, there are several reasons for the past experience of drift advance. We have been experimenting with some of the equipment we are using, and feel that this phase is now pretty well complete. Secondly, there have been some ventilation problems, and as indicated in the enclosed report, we have now started a ventilation raise that should be completed within the next month. Thirdly, we have been a little concerned about the water situation, and as you know, we have been doing some enlargement on the sump to better accomodate the deep well pumps. This work is practically complete. We are developing a small amount of water, and plan to be equipped to handle the anticipated larger flows. One item that has come to our attention in analysis of our electrical system, is that the Mayflower Mine transformer capacity was not sufficient to handle the complete load of hoisting and pumping. Accordingly, we have purchased and installed a duplicate set of large transformers, and at the present time are drilling an 800 foot cable hole from the surface to the vicinity of the underground collar of the Mayflower shaft. We anticipate that this installation will be complete by the first of the year.

At the present time, we are operating the raise one shift, and the main drift heading the other two shifts. By the first of the

year, we should have three shifts in the face of the drift, and also be starting some of the percussion drilling. This drilling has been held off to allow the time for completion of the pump equipment, as we do anticipate that these holes will tend to develop a substantial water supply.

Accordingly, we anticipate much better advance in 1961, and based on this, we should be able to meet the deadlines as provided in the contract.

Enclosed please find the September report forms, complete with narrative, maps and other accounting data.

Very truly yours,

NEW PARK MINING COMPANY

CLARK L. WILSON,
Vice President

CLW:ih

OFFICIAL FILE COPY
O. M. E.
RECEIVED OCT 29 1959

DATE	INITIALS	CODE
10/29	gad	VVO
10/29	[illegible]	500

Building 20 - Federal Center
Denver 25, Colorado

October 26, 1959

Mr. Clark L. Wilson, Vice-President
New Park Mining Company
904 Walker Bank Building
Salt Lake City, Utah

Re: Docket No. DMMA 4981 (Lead-Zinc-Copper)
Contract No. Idm-21218
New Park Mining Company
(Mayflower mine)
Wasatch County, Utah

Dear Mr. Wilson:

Enclosed is the Operator's copy of Amendment No. 5 which has been executed to provide for preparation of drill stations for long hole percussion drilling as well as diamond drilling.

Very truly yours,

Original signed by

J. W. Townsend
Executive Officer, OME
Field Team, Region III

JWT:ltm

cc: Chmn. Op. Comm. (2) w/Gov't & Aud. copy of Amend.
Finance Off. Reg. III)w/cpy of
Hasler)Amendment
OME/SLC)
Corres. file, Reg. III
Susp. file
Chron.

OFFICIAL FILE COPY O. M. E. RECEIVED OCT 14 1959		
DATE	INITIALS	CODE
10/14	RCW	225
10/14	[illegible]	800
10/15	[illegible]	500

Building 20 - Federal Center
Denver 25, Colorado
October 12, 1959

Mr. Clark L. Wilson, Vice-President
New Park Mining Company
904 Walker Bank Building
Salt Lake City, Utah

Re: Docket No. [illegible] (Lead-Zinc-Copper)
Contract No. Idm-[illegible]218
New Park Mining Company
(Mayflower mine)
Wasatch County, Utah

Dear Mr. Wilson:

In reference to your letter of September 18, 1959, enclosed are the Government's, Audit, Finance Office and Field Team copies of proposed Amendment No. 5 to the contract which has been prepared to provide for the use of drifting and crosscutting footage as necessary to provide for drill stations for long hole percussion drilling as well as diamond drilling.

If the proposed Amendment is satisfactory, all copies are to be signed by an official of New Park Mining Company authorized to sign such an instrument, the signer's title inserted, the corporate seal affixed, and all copies promptly returned to this office, upon receipt of which, the Operator's copy will be forwarded to you.

Very truly yours,

Original signed by

J. W. Townsend
Executive Officer, OME
Field Team, Region III

JWT:ltm

cc: Chmn. Op. Comm. (2)
Hasler)w/cpy of Chmn's.
Corres.)memo. 10/9/59
Susp.
Chron.

OFFICIAL FILE COPY
O. M. E.
RECEIVED OCT 14 1959

DATE	INITIALS	COMM.

JWT:lfm

cc: Chmn. Op. Comm. (2)
Hasler)w/copy of Chmn's.
Corres.)memo. 10/9/59
Sugg.
Chron.

OFFICIAL FILE COPY O. M. E. RECEIVED OCT 14 1959		
DATE	INITIALS	CODE
10/14	RCW	225
10/14	[illegible]	800
10/15	Greenfield	500

Building 80 - Federal Center
Denver 25, Colorado

October 12, 1959

Mr. Clark L. Wilson, Vice-President
New Park Mining Company
904 Walker Bank Building
Salt Lake City, Utah

Re: Docket No. [illegible] (Lead-Zinc-Copper)
Contract No. [illegible]
New Park Mining Company
(Mayflower mine)
Wasatch County, Utah

Dear Mr. Wilson:

An analysis of the rate of drift advance to date indicates that unless the rate of advance is increased considerably, it will not be possible to complete the drifting and crosscutting provided for in the contract within the period established for completion of the work.

Since it is somewhat doubtful that a time extension could be granted, we will appreciate advice as to your plans for correcting the situation.

Very truly yours,

Original signed by

J. W. Townsend
Executive Officer, OME
Field Team, Region III

JWT:lm

cc: Chem. Op. Comm. (2)
Butler
Correns.
Sump.
Chron.

OFFICIAL FILE COPY
O. M. E.
RECEIVED OCT 14 1959

DATE	INITIALS	CODE

Form 7
(10-58)

OFFICIAL FILE COPY

Date	Surname	Code
10/6	Mrianoy	500
10/6	Talbert	800
10/9	GCS	130
10/9	Kishamo	
"	[illegible]	110
10/12	RCW	220
		500

OCT 9 1959

Memorandum

To: Executive Officer, OME Field Team, Region III

From: Chairman, Operating Committee, OME

Subject: Docket No. DMEA-4981 (Lead-Zinc-Copper)
New Park Mining Company
Mayflower Mine
Wasatch County, Utah
Contract No. Idm-E1218

As recommended in your recent memorandum, we have prepared a proposed Amendment No. 5 to the cited contract. The original and four copies are enclosed, all of which have been signed by the Acting Director for the Government.

If the amendment meets with your approval, kindly present it to the Operator for approval and signature and, when completed, distribute all the copies in the usual manner. Otherwise, and if any proposed changes should lie beyond your delegated authority, all copies should be returned to us with your recommendations.

Two extra copies of the amendment are enclosed for Field Team use.

It appears that this project is stuttering along, with very little being accomplished. Monthly drift advances have been:

February	119 feet
March	54.5 feet
April	80.5 "
May	97.0 "
June	177.0 "
July	108.0 "
Total	636.0 "

Obviously, no substantial footage could have been expected during the first couple of months, while equipment was still being installed and the drift was just getting under way. But it would appear that after a few months the project should have emerged from

43683

the "shake-down" stage and started to function. Considering the amount of equipment available, the present rate of advance is insignificant.

At the present rate of advance the project would require almost another five years for completion. It might be well to advise this Operator that it would be quite impossible for us to grant any such extension, under the contract.

George C. Selfridge

Enclosures

APPROVED:

Frank D. Lamb

Member, Bureau of Mines

Harold Kirkemo

Member, Geological Survey

WRGriswold/gla 10-6-59
cc to: Director's Reading File
Operating Committee
Mr. Bishop, USBM
Mr. Kirkemo, USGS
Docket
Chron

Bill —

Pls. note corrected figures on transparent room to letter.

Also, as Amend. No. 5 does not state an "effective" date, the "agreed" date becomes such. However, the long-hole drill station (crosscut) was started in June.

Dal
10/6/59

MME Form 7
(10-58)

OFFICIAL FILE COPY

Date	Surname	Code

October 6, 1959

Memorandum

To: The File

From: W. R. Griswold, Chief
Division of Minerals

Subject: Proposed Amendment No. 5
Docket No. DMEA-4981 (Lead-Zinc-Copper)
New Park Mining Company
Mayflower Mine
Wasatch County, Utah
Contract No. Idm-E1218

We seem to continually have to amend this contract because the Operator was unable to originally say what it wanted. We provided diamond drill stations -- now we are told that stations are also required for percussion drilling. Perhaps the request is reasonable, but it should have been made originally.

W R Griswold

W. R. Griswold

43683

MME Form 7
(10-58)

SOLICITOR

OCT 1 - 1959

INTERIOR DEPT.

FROM SOLICITOR
5 1959
FOR SIGNATURE

RECEIVED
OCT 1959
ASSOC. SOLICITOR
MINERAL RESOURCES

OFFICIAL FILE COPY

Date	Surname	Code
9/30		~~300~~
		140
	Hoffman	

September 30, 1959

Memorandum

To: Associate Solicitor
Division of Mineral Resources

From: W. R. Griswold, Chief W. R. Griswold
Division of Minerals

Subject: Docket No. DMEA-4981 (Lead-Zinc-Copper)
New Park Mining Company
Mayflower Mine
Wasatch County, Utah
Contract No. Idm-E1218

Will you kindly prepare an Amendment No. 5 to the cited contract, along the following lines:

AMENDMENT NO. 5

It is agreed this _____ day of _____, 1959, between the United States of America, acting through the Department of the Interior, Office of Minerals Exploration, hereinafter called the "Government," and New Park Mining Company, hereinafter called the "Operator," that Exploration Project Contract No. Idm-E1218 (Docket No. DMEA-4981), dated June 23, 1958, as amended, hereinafter called the "Contract," is further amended as follows:

In Exhibit "A" under the heading, Description of the Work, as amended by Amendments Nos. 2 and 3, is further amended as follows:

3. Drifting and Crosscutting.

Drift and crosscut westerly on the 2005 level an estimated 6,000 feet. Also crosscut approximately 2,600 feet additional on the 2005 level and on the 800 level, to explore favorably mineralized

43683

areas and for diamond drill and long-hole percussion drill stations. The total of all drifting and cross-cutting may not exceed 8,600 feet. The drifts and crosscuts initially shall be approximately 7 feet by 10 feet in rock section, but periodically the bottom two feet may be back filled in connection with construction of a drainage ditch. Drifts and crosscuts shall be supported as necessary using standard drift sets or rock bolts and head plates.

This Amendment shall not be construed to increase the estimated total cost of the project, the aggregate amount which the Government may be required to contribute, nor the amount of any item designated as maximum.

Executed in quintuplicate the day and year first above written.

THE UNITED STATES OF AMERICA

By _____
Acting Director, Office of Minerals Exploration

NEW PARK MINING COMPANY

By _____

Title _____

UNITED STATES
DEPARTMENT OF THE INTERIOR
OFFICE OF MINERALS EXPLORATION
WASHINGTON 25, D. C.
Building 20 - Federal Center
Denver 25, Colorado

AIR MAIL

Memorandum

TO: Chairman, Operating Committee, OME

From: Executive Officer, OME Field Team, Region III

Subject: Docket No. DMEA 4981 (Lead-Zinc-Copper) Contract No. Idm-E1218, New Park Mining Company (Mayflower mine) Wasatch County, Utah

Enclosed are the original and two copies of a letter from the Operator dated September 18, 1959, pertaining to drill stations from which to perform long-hole percussion drilling.

In order to prevent disruptions of drifting operations, it is necessary that drill stations be provided by short crosscuts from which to perform percussion and diamond drilling. Generally the drill stations will first be used for long-hole percussion drilling to probe drift walls as provided for in the contract, and if conditions encountered make it necessary or desirable, the stations will later be used for the more expensive diamond drilling to probe the walls of crosscuts and drifts for more conclusive information as to ore occurrences.

It is recommended that Amendment No. 3 be further amended, effective April 1, 1959, to change the last part of the second sentence under item 3 to read "----and for diamond drill and long-hole percussion drill stations".

J. W. Townsend

Enclosure

OFFICIAL FILE COPY
O. M. E.
RECEIVED SEP 24 1959

DATE	INITIALS	CODE
9-24	gad	220
		130
9-28	Griswold	500

NEW PARK MINING COMPANY

KEETLEY, UTAH

SALT LAKE CITY OFFICE
904 WALKER BANK BUILDING

OME
DEPARTMENT OF THE INTERIOR
SEP 21 1959
REGION III
DENVER, COLORADO

September 18, 1959

Mr. J. W. Townsend, Executive Officer
O. M. E. Field Team, Region III
Building 20
Federal Center
Denver 25, Colorado

Re: Docket No. DMEA 4981
Contract No. Idm - E1218

Dear Mr. Townsend:

You will recall that the above referenced contract was amended under Amendment No. 3, to provide payment for diamond drill stations to be included in the approved contract footage of drifting and crosscutting.

It was our intention that payment should also be provided for drill stations cut for the percussion drilling program. As written in Amendment 3, payment is provided only for diamond drill stations.

At this time, I request that the contract be amended to provide for payment of all necessary drill stations.

Very truly yours,

NEW PARK MINING COMPANY

CLARK L. WILSON,
Vice President

OFFICIAL FILE COPY
O. M. E.
RECEIVED SEP 24 1959

DATE	INITIALS	CODE

CLW:ih

OFFICIAL FILE COPY
O. M. E.
RECEIVED SEP 21 1959

DATE	INITIALS	CODE
9-21	gad	220
9-21	[illegible]	120
9/22	[illegible]	800
9/22	[illegible]	500

Building 20 - Federal Center
Denver 25, Colorado

September 17, 1959

Mr. Clark L. Wilson
Vice President
New Park Mining Company
904 Walker Bank Building
Salt Lake City, Utah

Re: Docket No. DMEA 4981
(lead-zinc-copper)
Contract No. Idm-E1218
New Park Mining Company
(Mayflower Mine)
Wasatch County, Utah

Dear Mr. Wilson

Reference is made to our brief conversation on September 15 at the Mining Congress Convention regarding station preparation and sump excavation on the 2005 level.

We received a communication from our Washington office requesting information as to the installation, specifically a request for a simple sketch in plan and section showing the installation as it presently exists indicating the extent of excavation made.

Our files indicate that the sump was started prior to the date of the contract. Therefore, the map should show the extent of excavation completed at company expense prior to the date of the contract.

It would be well to provide an estimate of the volume of excavation completed at company expense and that completed subsequent to the date of the contract. In addition, please supply a breakdown of the costs involved in the excavation subsequent to the date of the contract. The cost breakdown should show costs of excavation in relation to other costs of installation of the pump column and the pumps as reported under item 2 of the supplementary accounting report submitted by your letter of August 21, 1959.

Very truly yours
Original signed by

J. W. Townsend
Executive Officer, OME
Field Team, Region III

cc: Chmn. Op. Comm.(2))w/cpy
D. T. Finch)Chmn.
OME/SLC)ltr.
Corres. file, Reg. III)9/11/59
MF 104 file)
Susp. file
Chron.

OFFICIAL FILE COPY
O. M. E.
RECEIVED SEP 21 1959

DATE	INITIALS	CODE
9-21	gad	110
9-21	Absent	120
9/22	CW	800
9/22	Grawell	500

Building 20 - Federal Center
Denver 25, Colorado

September 18, 1959

Mr. Clark L. Wilson
Vice President
New Park Mining Company
904 Walker Bank Building
Salt Lake City, Utah

Re: Docket No. DMEA 4981
(Lead-Zinc-Copper)
Contract No. Idm-K1218
(Mayflower Mine)
Wasatch County, Utah

Dear Mr. Wilson:

In reference to your request by letter of August 21, 1959, this confirms verbal concurrence by the Government for the drilling of percussion drill holes Nos. 1-5, inclusive, at the locations and attitudes indicated on the map attached to your request.

Very truly yours

OME Field Team, Region III

Original signed by
J. W. TOWNSEND
J. W. Townsend

J. William Hasler
Original signed by
J. WILLIAM HASLER
J. W. Hasler

cc: Finance Office, Reg. III
Amendment File, Reg. III
Chmn. Op. Comm. (2)) W/cpy
Hasler) Operator's
OME/SLC) request 8/21/59
Corr. file, Reg. III) & Romslo's
Susp.) memo 9/8/59
Chron.)

Additional information relative to the drilling plan follows:

1. Drill site no. 20-895 has been completed and the other site will be excavated at or near the indicated position.

2. Information obtained from the 5 drill holes will be analysed to determine if additional explorations by either percussion or diamond drilling is necessary.

3. The Operator will shortly request that percussion and/or diamond drilling be allowed from the presently allowable diamond drill stations.

Original signed by
T. M. Romslo
T. M. Romslo

cc: OME 6
Chron.

NEW PARK MINING COMPANY

KEETLEY, UTAH

OFFICIAL FILE COPY
O. M. E.
RECEIVED SEP 21 1959

DATE	INITIALS	CODE
August 21 1959		

Mr. J. W. Townsend, Executive Officer
O. M. E., Field Team Region III
Building 20, Federal Center
Denver 25, Colorado

Re: Docket No. DMEA 4981
Contract No. Idm - E1218

Dear Mr. Townsend:

Under the provisions of Amendment No. 4, to the above referenced contract, we would like to submit information on proposed percussion holes to be drilled on the 2005 level. We would appreciate your approval of the plan.

I am enclosing a sketch map indicating the drift outline on the 2005 level, together with known geology and projections of various fissures. You will note that holes, numbers 1 through 5, to be drilled essentially horizontal, should pretty well prospect not only the Mayflower fissure but also the Pearl fissure to the north.

We have already finished the drill station numbered 20-895, and propose the second drill station near the present face at the projected contact of the diorite and sediments.

The present face is on a footwall strand of the Mayflower fissure, and the wall rock seems to indicate that the projected contact is very near. As soon as the bad ground at the face is timbered up, we plan to start the ventilation raise, and after the last timbering is completed, we would hope to begin this drilling phase. Your approval would be appreciated.

Very truly yours,

CLARK L. WILSON,
Vice President

CLW:ih
cc: Gale A. Hansen

OFFICIAL FILE COPY
O. M. E.
RECEIVED SEP 21 1959

DATE	INITIALS	CODE

Building 20 - Federal Center
Denver 25, Colorado

September 8, 1959

Memorandum

To: J. W. Townsend

From: T. M. Romslo

Subject: Proposed Long-Hole Percussion Drilling, Docket DMEA-4981, (Lead-Copper) Contract Idm-E1218, New Park Mining Company (Mayflower Mine) Wasatch County, Utah

The Operator in a letter to you of August 21, 1959, requests approval of a proposed plan for the percussion drilling of 5 long holes on the 2005 level. A map attached to the letter shows the locations of the drift, the drill sites and the proposed holes. It also shows known geology and the projections of the various fissure systems.

On September 3, 1959, during a progress inspection of the project, the writer obtained information relative to the proposed plan of drilling through an inspection of mine maps and underground workings. It was found that ore deposits above the 2005 level occur along the fissure systems known as The Pearl, The No. 3, and The Mayflower. In the Pearl fissure high copper and gold values occur intermittently in both the diorite and limestone as zones averaging about 2 feet in width and ranging in strike length from a few tons of feet to a few hundred feet. It has been productive from the surface and can reasonably be expected to extend into the area of proposed exploratory drilling. Along the No. 3 and Mayflower fissures ore also occurs intermittently as deposits ranging in strike length from a few tens of feet to as much as 250 feet. These deposits are most extensive in the limestone where they pinch and swell along both the dip and strike to maximum widths of 30 to 40 feet. Possibilities of their extensions into the project area also are considered favorable. To the south of the drift the indicated fissure zone and another fissure further to the south are mineralized where cut by the drift. Although neither of these fissures have been productive, the presence of near ore grade material in a comparatively wide zone at the drift indicates that these fissures also should be explored.

On the basis of the above findings, the writer orally informed Gale A. Hansen, General Superintendent, that the proposed drilling plan was acceptable by the Government. The decision was verbally approved by J. W. Hasler, September 7, 1959, when I discussed my findings with him.

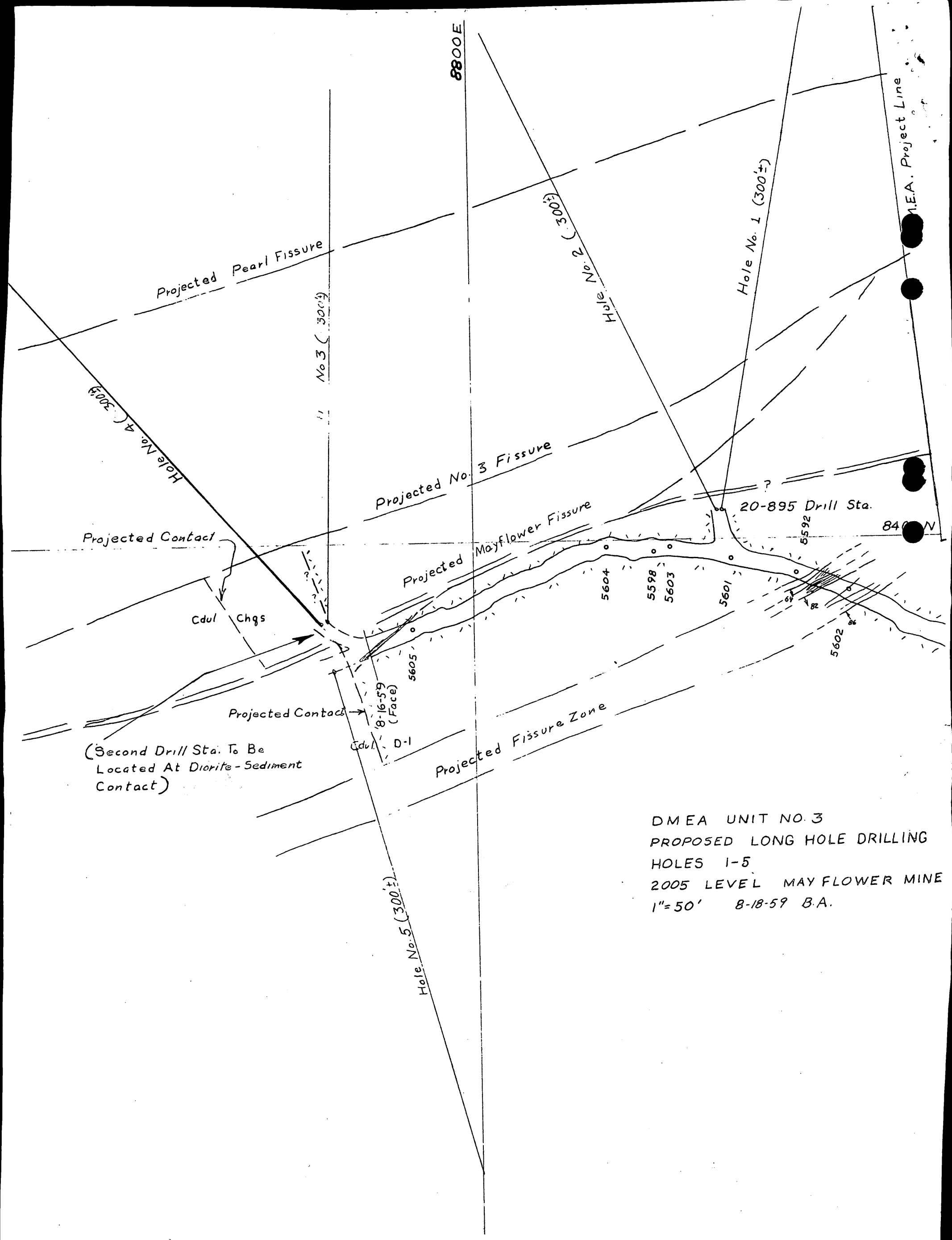

DMEA UNIT NO. 3
PROPOSED LONG HOLE DRILLING
HOLES 1-5
2005 LEVEL MAY FLOWER MINE
1"=50' 8-18-59 B.A.

OFFICIAL FILE COPY
O. M. E.
RECEIVED SEP 21 1959

DATE	INITIALS	CODE

DMEA Form 7
(12-56)

OFFICIAL FILE COPY

Date	Surname	Code
	Griswold	500
9/10	Talbert	800
		130
9/11	Selfridge	110
9-11	gold	220
		500

SEP 11 1959

Memorandum

To: Executive Officer, OME Field Team, Region III

From ACTING Chairman, Operating Committee, OME

Subject: Docket No. DMEA-4981 (Lead-Zinc-Copper)
New Park Mining Company
Mayflower Mine
Wasatch County, Utah
Contract No. Idm-E1218

We have your September 2 memorandum covering certain work under the cited contract. We are not inclined to contend that the sump excavation was not a necessary adjunct to pump installation; however, since it has been our general practice to consider any appreciable amount of rock excavation as a separate work item in a contract, it seems logical to make a clarifying amendment.

We are so in the dark as to the actual installation that (as requested in our August 18 memorandum) we would appreciate receiving a simple rough sketch showing, in plan and section, the installation as it presently exists, indicating excavations made. This would assist us in preparing an amendment.

We see no reason why you should withhold payment of the July vouchers.

W. R. Griswold

APPROVED:

Frank D. Lamb

Member, Bureau of Mines

Harold Kirkemo

Member, Geological Survey

cc: Docket
Director's Reading File
Operating Committee
O. M. Bishop, USBM
Harold Kirkemo, USGS
Chron.
Contract Adm. & Audit Div.

WRGriswold/GMcC
September 10, 1959

8623

UNITED STATES
DEPARTMENT OF THE INTERIOR
OFFICE OF MINERALS EXPLORATION
WASHINGTON 25, D. C.

Building 20 - Federal Center
Denver 25, Colorado

OFFICIAL FILE COPY
O. M. E.
RECEIVED SEP 8 1959

DATE	INITIALS	CODE
9-8	gad	VVO
		VVO
9/8	[illegible]	800
9-9	Grossfeld	500

September 2, 1959

Memorandum

To: Chairman, Operating Committee, OME

From: Executive Officer, OME Field Team, Region III

Subject: Docket No. DMEA 4981 (Lead-Zinc-Copper) Contract No. Idm-E1218
New Park Mining Company (Mayflower mine) Wasatch County, Utah

In conjunction with matter discussed in your memorandum of August 18, 1959, enclosed for advance information is a copy of the Operator's Supplementary Accounting Report to effect adjustments and include additional costs as outlined in the Audit Certificate and Audit Report dated June 3, 1959.

The additional costs charged to drifting under item 3 will naturally be suspended with other costs which exceed the maximum average unit cost of $45.00 a foot.

In reference to station preparation and enlargement of the sump on the 2005 level, Amendment No. 1 was executed to authorize a 12 inch pump column and provide for the installation of 2 - 450 hp submersible pumps in lieu of the installation of a 10 inch pump column and 2 - 175 hp pumps as originally provided for in the contract.

The Operator's justification for the increased size of the equipment was based on an estimated increase of the water flow to be encountered as the DMEA drifting is advanced.

Mr. Howes, formerly DMEA Engineering Inspector, is no longer assigned to OME work, and is out in the field most of the time on other Bureau of Mines projects. The matter was discussed briefly with him, and he advised that in his opinion the station preparation and sump enlargement were necessary in conjunction with the installation of the pump line and pumping equipment, and that to a considerable extent, both items of work were increased in order to accommodate the larger equipment and provide greater sump capacity.

It is my understanding that the sump work was originally started prior to execution of the contract, but that there remained considerable work to be completed after the contract was executed, which was subsequently increased because of the larger size of pump line and pumping equipment to be installed as authorized by Amendment No. 1.

It is true that the contract does not specifically provide for station preparation and sump excavation; however, the pumps specified in the contract are submersible type, and it is my contention that station preparation and necessary sump excavation are incident to the authorized work if adequate space and facilities did not exist at the time the contract was signed.

In commenting on the ambiguities of the contract in my letter of August 21, 1958, I anticipated a situation similar to that which exists where unforeseen but direct and necessary costs of performing the basic work under items 1, 2 and 5 would increase the costs of the work under those items far beyond that originally estimated.

Perhaps, as suggested in your memorandum of August 18, an amendment to the contract to clarify the matter is the answer to the present situation. I am in doubt as to what justification I can give at this late date as a basis for the amendment other than that it is considered that the amendment is necessary in order to clear up an ambiguous point in conjunction with the authorized installation of the pump column and pumps.

If payment for the work is not deamed allowable under the contract as presently written, or if the foregoing justification for an amendment is not considered adequate please let me know what you would suggest.

Processing of the Operator's Supplementary Accounting Report will be deferred pending receipt of further advice from you. The Supplementary Report provides the totals to date which are carried forward to the July Accounting Report, therefore, it is desirable to process the Accounting Reports in the order of accumulative totals reported. Consequently, we will also defer processing of the July Accounting Report which we have also received.

J. W. Townsend

J. W. Townsend

W.O.

NEW PARK MINING COMPANY

KEETLEY, UTAH

SALT LAKE CITY OFFICE
900 WALKER BANK BUILDING

OFFICIAL FILE COPY
O. M. E.
RECEIVED SEP 8 1959

DATE	INITIALS	CODE

August 21, 1959

Mr. J. W. Townsend, Executive Officer
O. M. E., Field Team Region III
Building 20, Federal Center
Denver 25, Colorado

Re: Docket No. DMEA 4981
Contract No. Idm - E1218

Dear Mr. Townsend:

We are resubmitting MF 104 forms on the above referenced contract, covering audit disallowances and also additional costs that we feel are acceptable against the three projects. I am also enclosing a narrative prepared by our mine superintendent, indicating the type of work that require these additional costs.

I trust this information is presented as requested in your recent letter.

Very truly yours,

NEW PARK MINING COMPANY

CLARK L. WILSON,
Vice President

CLW:ih

OME
DEPARTMENT OF THE INTERIOR
AUG 25 1959
REGION III
DENVER, COLORADO

OFFICIAL FILE COPY
O. M. E.
RECEIVED SEP 8 1959

DATE	INITIALS	COL

Mr. J. W. Townsend
Executive Officer O.M.E.
Field Team Region III
224 New Customhouse
Denver 2, Colorado

August 18, 1959

Re: Docket No. DMEA 4981
Contract No. Idm - E-1218

Dear Sir:

Enclosed are five copies each of form MF-104, Form MF-104A, and the cost distribution sheet after June 23, 1958, to July 3, 1959, audit.

"Additional costs acceptable", found on the enclosed cost distribution sheet are direct costs applicable to projects No. 1, No. 2, and No. 3, they were incurred as follows:

Project No. 1, ($374.00) this expense is the result of 22 man-shifts spent in retimbering an old section of the Mayflower tunnel in which the 16 inch transite tunnel pipe was installed.

($41.58) this expense is for 120 ft. of 40 lb. rail used in the pump installation and not previously charged against the project. The rail was used in cementing the abutments for the pump installation and should be a direct charge against project No. 2.

Project No. 2, ($7,037.00) this expense was incurred as follows:

$2,449.00 = 152.5 manshifts in preparation of the shaft for the new pump column.

$3,740.00 = 229 manshifts in preparation for water ways across the 2005 level and sumps.

$ 848.00 = 53 manshifts in power cable installation in shaft for 2005 level 450 hp. pumps.

$7,037.00 Total.

Prior to the installation of this equipment, it was necessary to clean out one compartment of the shaft to provide the necessary space for the new pump column installation. This work consisted of removal of the two six inch temporary pump columns, the elec. cables, ladder ways, etc., without interrupting the power supply and the temporary pumping facilities.

The 2005 level work consisted of installation of water ways

OME
DEPARTMENT OF THE INTERIOR
AUG 28 1959
REGION III
DENVER, COLORADO

across the station to the water sumps and the pump installation.

Project No. 2, ($97.52) this expense is for fringes on the above labor costs.

($217.52) this expense is for 3,351 bd. ft. of timber used in cement work forms and supports for the pump and pump column installation.

($9.05) this expense is a corrected cost in the price of explosive caps used in the 2005 level station preparation, and the 2005 level sump.

Project No. 3, ($1,328.32) this expense is the difference in cost for February and March power bill as calculated on the cost per ton hoisted base. "Note Audit Report".

We have a verbal agreement with the lessees that since this work could not be measured in units, they were to proceed with it as expeditiously as possible and we would reimburse them for their actual labor costs. On this basis, we feel that these charges are a justified expense to the DMEA Unit.

Should your office require any additional information in regards to these "Additional Costs Acceptable" please let us know.

Very truly yours,

Gale A. Hansen
General Superintendent

GAH:jw

OME
DEPARTMENT OF THE INTERIOR
AUG 28 1959
REGION III
DENVER, COLORADO

Form MF-104 (Rev.)
(April 1952)

Budget Bureau No. 42-R1006.5

UNITED STATES
DEPARTMENT OF THE INTERIOR
DEFENSE MINERALS EXPLORATION ADMINISTRATION

OFFICIAL FILE COPY
O. M. E.
RECEIVED SEP 8 1959

DATE	INITIALS	CODE

OPERATOR'S MONTHLY REPORT AND VOUCHER

June 23, 1958 to March 31, 1959
~~MARCH~~, 195 ... Docket No. DMEA 4981

Operator's Name New Park Mining Company
Address 907 Walker Bank Building, Salt Lake City, Utah

Contract Amount, $ 564,880.00 Government Participation: 50 %

Contract No. E-1218
Minerals Lead, Zinc & Copper
Amount, $ 282,440.00

ITEMS OF COSTS	FOR OPERATOR'S USE: Monthly Total	Totals Previously Reported	Totals To Date	FOR GOVERNMENT USE ONLY: Approved Monthly ~~Total~~	Approved Totals Previously Reported	Approved Totals To Date
(1) Independent Short Form Contracts:						
Drilling						
Bulldozing						
Crosscutting						
Drifting						
(2) Labor and Supervision:						
Labor	7,411.00	31,973.93	39,384.93			
Supervision		7,450.00	7,450.00			
Technical Services						
(3) Operating Mat'ls. and Supplies:						
Timber	217.52	1,313.59	1,531.11			
Explosives	3.87	2,973.01	2,976.88			
Pipe	494.14	14,914.82	14,420.68			
Track	350.35	890.06	539.71			
Pipe Column @ 50%	95.38	8,249.82	8,154.44			
Supplies	7.83	7,198.58	7,190.75			
(4) Operating Equipment:						
~~Rental~~ Power	1,328.32	6,023.72	7,352.04			
Purchase		4,513.86	4,513.86			
Depreciation						
(5) Initial Rehabilitation and Repairs						
(6) New Bldgs., Improvements, etc.						
(7) Miscellaneous:						
Repairs to Equipment		392.50	392.50			
Sampling and Analysis						
Payroll Taxes						
Liability Insurance						
Accounting		2,900.00	2,900.00			
Fringe Benefits	97.52	3,280.57	3,378.09			
(8) Contingencies (specify):						
TOTALS	8,110.53	92,074.46	100,184.99			

OME
DEPARTMENT OF THE INTERIOR
AUG 28 1959
REGION III
DENVER, COLORADO

I certify that the above bill is correct and just and that payment therefor has not been received.

Date 8- -59 Payee New Park Mining Company

Per [signature] Title Vice President

* When a voucher is signed or receipted in the name of a company or corporation, the name of the person writing the company or corporate name, as well as the capacity in which he signs, must appear. For example: "John Doe Company, per John Smith, Secretary," or "Treasurer," as the case may be.

NOTE.—Title 18, U. S. Code (Crimes), section 1001, makes it a criminal offense to make a willfully false statement or representation to any department or agency of the United States as to any matter within its jurisdiction.

(Instructions on reverse)

Pursuant to authority vested in me, I certify that this account is correct and proper for payment in the amount of:

$.....

Signature .....
(Authorized Certifying Officer)

Date ..... Vou. No. .....
(See other side)

Form MF-104A
(April 1958)

Budget Bureau No. 42-R1151.2

UNITED STATES
DEPARTMENT OF THE INTERIOR

DEFENSE MINERALS EXPLORATION ADMINISTRATION

OPERATOR'S UNIT COST AND PROGRESS REPORT

June 23, 1958 to March 31, 1959
~~Month~~ ..... 195.....

Docket No. DMEA 4981

Contract No. E-1218

Operator's Name New Park Mining Company

Address 907 Walker Bank Building, Salt Lake City, Utah

Minerals Lead, Zinc & Copper

OPERATION	UNIT	COSTS THIS MONTH	UNITS THIS MONTH	COSTS TO DATE	UNITS TO DATE	UNIT COSTS TO DATE	AUTHORIZED BY CONTRACT	
							Units	Unit Costs
#3 Drifting	Feet	691.76	none	35,943.98	535	67.19	8,600	45.00
Crosscutting								
Raising								
#2 ~~Shaft~~	Feet	7,265.71	none	23,204.30	1513	15.34	1,660	
Winzes								
Drilling: Core								
Churn								
Auger								
Stripping								
Trenching								
Test Pits								
Roads and Trails								
#1 16" Transite Pipe	Feet	153.06	none	41,036.71	7149½	5.74	7,140	
TOTAL DISTRIBUTED COSTS		8,110.53		100,184.99				TOTAL COSTS AUTHORIZED BY CONTRACT
Operating Equipment Purchased								
Initial Rehabilitation and Repairs								
New Buildings, Improvements, etc.								
TOTAL COSTS		8,110.53		100,184.99				

The undersigned company, and the official executing this certification on its behalf, hereby certify that the information contained in this report is correct and complete to the best of their knowledge and belief.

REMARKS:

Date 8-[illegible]-59 Operator New Park Mining Company

Per [signature] Title Vice President

NOTE.—Title 18, U. S. Code (Crimes), section 1001, makes it a criminal offense to make a willfully false statement or representation to any department or agency of the United States as to any matter within its jurisdiction.

(Instructions on reverse)

(For Government use only)

OFFICIAL FILE COPY
O. M. E.
RECEIVED SEP 8 1959

DATE	INITIALS	CODE

OME
DEPARTMENT OF THE INTERIOR
AUG 28 1959
REGION III
DENVER, COLORADO

EXTRA COPY O. M. E. RECEIVED AUG 31 1959		
DATE	INITIALS	CODE
8/31	gad	VVO
9/2	[illegible]	500

Building 20 - Federal Center
Denver 25, Colorado

August 28, 1959

Memorandum

To: T. A. Christensen

From: Executive Officer, OME Field Team, Region III

Subject: Docket No. DMEA 4981 (Lead-Zinc-Copper) Contract No. Idm-E1218, New Park Mining Company (Mayflower mine) Wasatch County, Utah

Enclosed is the original of a power schedule submitted by the Operator which is to be attached to your copy of the accounting report form MF104 for the month of June, 1959, which was processed under schedule No. DMEA 60-6 under date of August 19, 1959.

J. W. Townsend

Enclosure

JWT/cg

cc: Chmn. Op. Comm. (2) } w/cpy power
OME/SLC } schedule
MF104 file, Reg. III }
Susp.
Chron.

NEW PARK MINING COMPANY
D.M.E.A. PROJECTS
JUNE, 1959

Docket No. DMEA 4981 Contract E-1218

(4) POWER:

Total Waste Hoisted from 2005 level	2,322 tons
Total Ore and Waste from other levels	4,315 tons
Total Tons of Rock Hoisted	6,637

Power costs as per Voucher No. 2124 676543 ÷ 6,637 tons = $1,019.35

1,019.35 x 2322/2005 Drift = 2,366.93

COPY

OME
DEPARTMENT OF THE INTERIOR
AUG 28 1959
REGION 6
DENVER, COLORADO

OFFICIAL FILE COPY O. M. E. RECEIVED AUG 24 1959		
DATE	INITIALS	CODE
8/24	gad	VVO
		1VO
8-25	[illegible]	500

Building 20 - Federal Center
Denver 25, Colorado
August 19, 1959

Mr. Clark L. Wilson
Vice-President
New Park Mining Company
904 Walker Bank Building
Salt Lake City, Utah

Re: Docket No. IMSA 4981
(Lead-Zinc-Copper)
Contract No. Ida-K1218
New Park Mining Company
(Mayflower mine)
Wasatch County, Utah

Dear Mr. Wilson:

Enclosed is the Operator's Copy of Amendment No. 4 which has been executed to modify the description pertaining to long-hole drilling under the contract.

Very truly yours,

Original signed by

J. W. Townsend
Executive Officer, OME
Field Team, Region III

Enclosure

JWT/cg

cc: Chmn. Op. Comm. (2)) w/Gov't & Audit copies of Amend.
Fin. Off. Reg. III) w/cpy of Amend.
Hasler)
OME/SLC)
Corres. file)
Susp. file
Chron.

MME Form 7
(10-58)

OFFICIAL FILE COPY

Date	Surname	Code
8/18	gad	220
"	[illegible]	500

AUG 18 1959

Memorandum

To: Acting Director

From: E. D. Talbert, Acting Chief (Signed) E. D. Talbert
Contract Administration and Audit Division

Subject: Docket No. DMEA-4981 (Lead-Zinc-Copper)
New Park Mining Company
Contract No. Idm-E1218

In my July 10 memorandum, endorsing Mr. Fisher's recommendation that consideration be given to converting the A.S. & R. contract (Idm-E1134, DMEA-4712) to a unit cost basis, I stated that:

"Consideration of a similar amendment for Contract Idm-E1218, Docket DMEA-4981, New Park Mining Company, also seems appropriate."

After further review of the subject docket I have concluded that such an amendment is not appropriate. The files disclose that most of the excess costs of drifting as performed through May 1959 were occasioned by over-breakage and non-repetitive costs of lowering, assembling, and putting into operation the various items of equipment (Jumbo, Eimco loader, tram car loader, transformers, batteries, etc.).

The contract specifies that:

"The drifts and crosscuts initially shall be approximately 7 feet by 10 feet in rock section, but periodically the bottom two feet may be back filled in connection with construction of a drainage ditch."

Under this specification the 351 feet of drift completed through May would involve approximately 24,570 cubic feet of excavation. However, the actual excavation amounted to 33,385 cubic feet based on reported drifting of 119 feet 10x12, 54.5 feet 9x10, and 177.5 feet 8x10. This is an aggregate over-breakage of approximately 35.9%.

Based on the audited costs of $12,121.46 for the first 173.5 feet and unaudited costs of $13,575.71 for the 177.5 feet, or a total of $25,697.17 for 351 feet, the average actual cost was

$73.21 a foot. If consideration is given to the 35.9% over-breakage a unit cost of approximately $53.87 for a 7x10 drift is indicated. Considering also that this cost includes the non-repetitive costs mentioned in the second paragraph, it appears that the excess costs are not sufficient to justify consideration of a fixed unit cost amendment to the contract.

Aside from the question of justification for conversion to fixed unit costs, such an amendment may not be either practical or to the best interests of the Government. This contract provides, through the deletion of the last portion of Article 3, that the Operator shall complete the work provided in the contract regardless of costs incurred (though this may be contravened by failure to delete the last clause of the first paragraph under Article 6). This work consists of the following items and allowable costs:

1.	Water Disposal Facilities	$?
2.	Pumps & Column Installation	?
3.	Drifting & Crosscutting (8,600' @ $45.)	387,000.00
	Timbering (as required @ $11.)	?
	Rockbolting (as required @ $5.)	?
4.	Ventilation Raises (250' @ $48.)	12,000.00
5.	Water Doors	?
6.	Longhole Drilling (20,000' @ $1.)	20,000.00
7.	Diamond Drilling (11,000' @ $6.35)	69,850.00
-	Assaying (2,500 determinations @ $1.)	2,500.00
	Total Contract	$564,880.00

Work items, for which maximum allowable costs are not specified, are indicated by question marks in the above listing. As the four items, for which maximums are specified, plus the estimate for assaying aggregate $491,350.00, and the costs through May of work items nos. 1 and 2 total $62,697.75 (audited costs through March plus claimed costs for April and May), there remains only $10,832.00 for the completion of items nos. 1 and 2, the entire cost of item no. 5, and necessary timbering and rockbolting under item no. 3. As no provision is made for sideswiping, any such work as may be necessary must be at the Operator's sole expense.

From the foregoing it seems a certainty that the Operator must assume a considerable amount of costs in excess of the contract amount in order to complete the work, as required by Article 3. Therefore, it does not appear to be in the Government's interest to amend the allowable costs provisions of this contract.

EDTalbert/ama
August 17, 1959

Copy to: Docket
Director's Reading File
CA & A Division

MME Form 7
(10-58)

OFFICIAL FILE COPY

Date	Surname	Code
8/13	[illegible]	500
		500
8/13	Talbert	800
8/18	[illegible]	130
8/14	J. Lynch	140
8/17	Vernon	140
8/17	[illegible]	140
8/18	Appvd. Sol. Off.	120
		120
8/19	gad	500

AUG 18 1959

Memorandum

To: Executive Officer, OME Field Team, Region III

From: Chairman, Operating Committee, OME

Subject: Docket No. DMEA-4981 (Lead-Zinc-Copper)
New Park Mining Company
Mayflower Mine
Wasatch County, Utah
Contract No. Idm-E1218

We have your memorandum of August 10, also your memorandum of August 7 to Donald T. Finch (with enclosures), covering certain cost items under the cited project. We are not quite clear regarding the justification for acceptance of the cost of the sump enlargement on the 2005 level, under the present contract terms. We do not question the statement of M. H. Howes that such work was reasonable and necessary, but there is no specific provision in the contract for such rock excavation.

The work done in connection with the installation of transite pipe and water column was of a more or less routine nature and falls under the contract provisions. The provisions were purposely written in general terms because, in installations of this nature, all specific work items cannot be foreseen.

On the other hand, the connection between an item of "installation of pumps" and enlargement of a water sump is not as obvious. In fact, in the report of Howes and Moore of May 26, 1958 (about a month before the contract was executed), we find the statement, "A water sump is now being cut on the 2005 level for pump installations ...". Hence, the item of sump enlargement had not been considered when the contract was prepared, as we had no information that such work would be necessary.

We realize that in instances of this sort it is the proper responsibility of the Field Team to determine what work items are reasonable and necessary; therefore, perhaps the contract should be

43683

amended to cover the point in question. However, we would first require more detail for an amendment justification and a rough sketch illustrating what was done. Meanwhile, we suggest you defer processing of the supplementary report referred to in your August 10 memorandum.

/s/ George C. Selfridge

(AB)

APPROVED:

Frank D. Lamb (AB)
Member, Bureau of Mines

Harold Kirkemo (AB)
Member, Geological Survey

WRGriswold/gla 8-13-59
cc to: Director's Reading File
Operating Committee
Contract Adm. & Audit Division
Mr. Bishop, USBM
Mr. Kirkemo, USGS
Docket
Chron

MME Form 7
(10-58)

OFFICIAL FILE COPY

Date	Surname	Code
8-14	gad	220
8/17	[illegible]	500

AUG 14 1959

Memorandum

To: Mr. Donald T. Finch, OME Auditor

From: E. D. Talbert, Acting Chief (Signed) E. D. Talbert
Contract Administration and Audit Division

Subject: Docket No. DMEA-4981 (Lead-Zinc-Copper)
New Park Mining Company
Contract No. Idm-E1218

Enclosed for your information is a copy of a reconciliation of your recent audit findings on the subject contract with the Operator's cost distribution as shown on the March MF-104.

It will be noted that the distribution of costs of Supervision, Accounting, and Fringe Benefits have not been completed but have been indicated by question marks in this reconciliation. These figures are not available to me inasmuch as your audit did not fully distribute these items. Please furnish me with this missing information, which I'm sure you have in your working papers.

Enclosure

EDTalbert/ama
August 14, 1959

Copy to: Docket
Director's Reading File
CA & A Division

43683

Reconciliation of Cost Distribution
March 1959 MF-104A and Interim Audit Report
Idm-R1218, New Park Mining Company, DMEA-4981

	Transite Pipe	Pumps & Column	Drift & Crosscut
Claimed (MF-104A)	$35,665.34	$13,225.57	$11,429.70
Less Disallowances:			
Explosives			5.18
Pipe	262.52		231.62
Rail			391.93
Column Hanger		95.38	
Bits			7.83
Acceptable Claim	35,402.82	13,130.19	10,793.14
Additional Allowances:			
Labor	374.00	7,037.00	
Timber		217.52	
Explosives		9.05	
Track		41.58	
Power			1,328.32
Fringe Benefits		97.52	
Adjusted Costs	35,776.82	20,532.86	12,121.46
Excess Costs			4,313.96
Acceptable Costs	$35,776.82	$20,532.86	$ 7,807.50

Distribution

Labor Costs:			
Contract Labor	$12,867.00	$ 3,026.00	$ 4,223.08
Timbering	374.00		
Shaft Work		2,449.00	
Level Work		3,740.00	
Power Cable		848.00	
	13,241.00	10,063.00	4,223.08
Materials & Supplies:			
Timber	297.05	767.86	161.81
Explosives		9.05	745.97
Pump Column -			
Pipe		4,276.23*	
Couplings & Ells		1,306.71*	
Valves		1,368.14*	
Shop Work, etc.		454.92*	
Transformers, etc.		444.00*	
Other Materials		304.44*	
Other Pipe	12,202.74*		231.52*
Track		41.58*	167.97*
Power			2,296.45
Other	2,389.95		1,505.76
	14,889.74	8,972.93	5,109.48

	Transite Pipe	Pumps & Column	Drift & Crosscut
Equipment:			
Depreciation	$ -0-	$ -0-	$ 1,253.66
Repairs to Equipment:			
Cement Buster	379.03		
Jumbo			13.47
	379.03	-0-	13.47
Other Costs:			
Supervision	?	?	900.00
Accounting	?	?	400.00
Fringe Benefits	?	?	221.77
	7,867.05	1,496.93	1,521.77
Excess Costs	-0-	-0-	4,313.96
Acceptable Costs	$35,776.82	$20,532.86	$ 7,807.50
**Subsequent Costs:			
April 1959	$ 4,001.62	$ 1,157.11	$ 6,661.43
May 1959	1,087.80	141.54	6,914.28
	5,089.42	1,298.65	13,575.71
Excess Costs	-0-	-0-	5,588.21
Total Costs, May 31, 1959	$40,866.24	$21,831.51	$15,795.00

*50% of actual costs, as provided by contract.
**Accepted by Field Team, subject to audit.

OFFICIAL FILE COPY
O. M. E.
RECEIVED AUG 17 1959

DATE	INITIALS	CODE
8-17	gad	VVO
8/17	[illegible]	800
8-18	[illegible]	500

Building 20 - Federal Center
Denver 25, Colorado
August 14, 1959

Mr. Clark. L. Wilson
Vice - President
New Park Mining Company
Meetley, Utah

Re: Docket No. DMEA 4981
(Lead-Zinc-Copper)
Contract No. IDM - E1218
New Park Mining Company
(Mayflower Mine)
Wasatch County, Utah

Dear Mr. Wilson:

Enclosed are the Government's, Audit's, Finance Office, and Field Team's copies or proposed Amendment No. 4 to Contract Idm-E 1218 which has been prepared in reference to your letter of July 15, 1959 to modify the description pertaining to the long-hole drilling.

If the proposed amendment is satisfactory, all copies are to be signed by an official of New Park Mining Company authorized to sign such an instrument, the signers title inserted, the corporate seal affixed, and all copies promptly returned to this office upon receipt of which the Operator's copy will be forwarded to you.

Very truly yours,

J. W. Townsend
Executive Officer, OME
Field Team, Region III

Enclosure

JWT/cg

cc: Chmm. Op. Comm. (2)
Hasler
OME/SLC
Corres. file
Susp. file
Chron.

Building 20 - Federal Center
Denver 25, Colorado
August 12, 1959

Mr. Clark L. Wilson
Vice-President
New Park Mining Company
Heetley, Utah

Re: Docket No. DMRA 4981 (Lead-Zinc-Copper)
Contract No. Ida-21218
New Park Mining Company
(Mayflower mine)
Wasatch County, Utah

Dear Mr. Wilson:

Supplementing my letter of August 11, 1959, the June accounting report referred to therein was received in this office July 31, 1959, but the fact was overlooked since Mr. Romslo had the report with him for use during his recent inspection of the project.

In reference to the charge for power on the June report, please forward for attachment to it, and as a part of all subsequent reports, five copies of an analysis similar to that on page 8 of the Audit Report which shows the rock tons hoisted during the reporting period, and the resulting basis of power charge to the OME project.

Very truly yours,

Original signed by
J. W. TOWNSEND

J. W. Townsend
Executive Officer, OME
Field Team, Region III

JWT:ltm

cc: Chmn. Op. Comm. (2)
D. T. Finch
OME/SLC
Corres. file, Reg. III
Susp. file
Chron.

OFFICIAL FILE COPY
O. M. E.
RECEIVED AUG 17 1959

DATE	INITIALS	CODE
8-17	gad	200
8/17	[illegible]	800
8-18	[illegible]	500

OFFICIAL FILE COPY
O. M. E.
RECEIVED AUG 14 1959

DATE	INITIALS	CODE
8-14	gad	rro
8/14	[illegible]	800
8/17	[illegible]	500

Building 20 - Federal Center
Denver 25, Colorado
August 11, 1959

Mr. Clark L. Wilson, Vice-President
May Park Mining Company
Mootley, Utah

Re: Docket No. DMRA 4981 (Lead-Zinc-Copper)
Contract No. Ibm-X1218
May Park Mining Company
(Mayflower mine)
Wasatch County, Utah

Dear Mr. Wilson:

Enclosed are five copies each of Form MF-104, Form MF-104A, and the cost distribution sheet which were forwarded by your letter of August 4, 1959, as a supplementary accounting report for the period from June 23, 1958 thru March 31, 1959.

We cannot reconcile the amounts in the column "Totals Previously Reported" of the supplementary report with the "Totals To Date" of the May Report, the last accounting report on file in this office; therefore, we assume that they are the totals of the report for the month ending June 30, 1959, which has not been received. Reports must be processed in the order of the "Totals" recorded; therefore, processing of the supplementary report must be deferred until the prior report is received.

In a recent telephone conversation with your Mr. Harper, we suggested that the supplementary report be submitted between two of your regular monthly accounting reports, thereby eliminating the confusion that might result if adjustments were combined with current expenditures. Also the correct "Totals to Date" of the supplementary report would be available for the next regular monthly report.

The supplementary report is returned for revision because it is desirable that it clear up all discrepancies that existed up to the ending date covered by the Audit Report dated July 3, 1959. The accounting report should reflect distribution by reverse entry of "Audit Disallowances and correct the distribution to appropriate work categories as outlined in the Audit Report. The distribution sheet accompanying the report should show reverse entry items, adjustments, and additional cost claimed.

Enclosed are six copies each of blank Forms MF-104 and MF-104A, for your use in preparing a revised supplementary report.

Enclosure
JWT:ltm
cc: Chmn. Op. Comm. (2) w/cpy Oper's
D. T. Finch ltr. 8/4/59
OME/SLC
Corres. file, Reg. III)
Susp. file
Chron.

Very truly yours,

Original signed by
J. W. TOWNSEND

J. W. Townsend
Executive Officer, OME
Field Team, Region III

NEW PARK MINING COMPANY

KEETLEY, UTAH

SALT LAKE CITY OFFICE
904 WALKER BANK BUILDING

W.O.

OME
DEPARTMENT OF THE INTERIOR
AUG 6 - 1959
REGION III
DENVER, COLORADO

August 4, 1959

Mr. J. W. Townsend, Executive Officer
O. M. E.
Field Team, Region III
224 New Customhouse
Denver 2, Colorado

Re: Docket No. DMEA 4981
Contract No. Idm - E1218

Dear Mr. Townsend:

In the audit report of Mr. Donald T. Finch, O. M. E. Auditor, dated June 18, 1959, he indicated some labor, material and other accounts that he felt were proper charges against projects 1, 2, and 3, of the above referenced contract. Enclosed you will please find copy of forms MF 104 and MF 104A, together with a detailed breakdown of these various expense items.

I believe we have indicated to you previously that we do have some footage contracts for work performance between New Park Mining Company and the Mayflower Lease. However, there are some items, labor and material, in the way of preparatory work that are outside these particular agreements. The amounts now reported cover these particular items.

Very truly yours,

NEW PARK MINING COMPANY,

CLARK L. WILSON,
Vice President

CLW:ih

OFFICIAL FILE

Date	Surname	
8-10	[illegible]	500
8/10	Talbot	800
8/11	GCS	130
"	Johnson	110
		~~100~~
		HB
8/12	gad	220
		500

AUG 11 1959

Memorandum

To: Executive Officer, OME Field Team, Region III

From: Chairman, Operating Committee, OME

Subject: Docket No. DMEA-4981 (Lead-Zinc-Copper)
New Park Mining Company
Mayflower Mine
Wasatch County, Utah
Contract No. Idm-81218

In reference to your July 28th memorandum (with enclosures) covering the cited project, we are enclosing the original and four copies of a proposed Amendment No. 4, which have been signed by the Acting Director for the Government. Also enclosed are two extra copies for the use of the Field Team.

If the amendment meets with your approval, kindly present it to the Operator for approval and signature and, when completed, distribute the copies in the usual manner. Otherwise, and if any proposed change should lie beyond your delegated authority, return all copies to us with your recommendations.

/s/ George C. Selfridge (-46)

Enclosures

APPROVED:

P. F. Yopes (-46)
Member, Bureau of Mines

Harold Kirkemo (-46)
Member, Geological Survey

WRGriswold/er 8-10-59
Copy to: Docket
Dir Read File
Op. Committee
Mr. Bishop, USBM
Mr. Kirkemo, USGS
Chron.

8623

UNITED STATES
DEPARTMENT OF THE INTERIOR
OFFICE OF MINERALS EXPLORATION
WASHINGTON 25, D. C.
Building 20 - Federal Center
Denver 25, Colorado

OFFICIAL FILE COPY
O. M. E.
RECEIVED AUG 12 1959

DATE	INITIALS	CODE
8/12	gad	VVO
"	JEJ	110
8/13	[illegible]	800
"	G	500

August 10, 1959

AIRMAIL
Memorandum

TO: Chairman, Operating Committee, OME

From: Executive Officer, OME Field Team, Region III

Subject: Docket No. DMEA 4981 (Lead-Zinc-Copper) Contract No. Idm-E1218
New Park Mining Company (Mayflower Mine) Wasatch County, Utah

We are in receipt of the Operator's supplementary accounting report, Form MF-104, claiming reimbursement for the additional cost outlined in the Audit Certificate and Report of Audit of the subject account dated June 3, 1959, by the Contract Administration and Audit Division, OME. The representatives of the General Accounting Office that are, at present, in this office conducting an audit of OME accounts have indicated an exception to the allowability of the portion of the additional costs as outlined in the OME Report of Audit.

The inspecting engineer and this office are firm in the opinion that the additional costs are reasonable and that they were a direct and necessary cost of performing the work provided for in the contract; however, under the circumstances I am in doubt as to whether or not the supplementary claim should be processed for reimbursement to the Operator until we are more certain of our ground. The Operator's claim totals $9,104.99, which would be reduced by the charges to drifting which cause the cost to date to exceed the average maximum unit cost of $45.00 per foot.

Enclosed is a copy of a memorandum dated August 6, 1959, from M. H. Howes, Mining Engineer, Bureau of Mines, which reflects his opinion regarding the necessity for the work in question. I concur in his opinion, and in addition, believe the cost involved to be reasonable.

Processing of the supplementary report will be deferred pending receipt of advise from you in the matter.

J. W. Townsend

J. W. Townsend

OFFICIAL FILE COPY
O. M. E.
RECEIVED AUG 10 1959

DATE	INITIALS	CODE
8-10	gad	VVO
		800

Building 20 - Federal Center
Denver 25, Colorado

August 7, 1959

Memorandum

TO: Donald T. Finch, OME Auditor, Region III

From: Executive Officer, OME Field Team, Region III

Subject: Docket No. DMA 4481 (Lead-Zinc-Copper) Contract No. Dla-21218
New Park Mining Company (Mayflower Mine) Wasatch County, Utah

Enclosed are two copies of a memorandum dated August 6, 1959, from H. E. Hunn, Mining Engineer, Bureau of Mines, which is in reference to certain additional costs of project work as outlined in your Audit Certificate and Audit Report dated June 3, 1959.

Also enclosed are two copies of a Labor Agreement between the Operator and the Lessees pertaining to installation of transite pipe and installation of pump column and pumps.

Original signed by
J. W. TOWNSEND

J. W. Townsend

Encls.
Hdq.

cc: MP-164 file (5)w/cpy Hunn memo.
Corres. file, Reg. III) w/cpy Hunn
memo. & Labor Agree.

Supp. file
Chron.

OFFICIAL FILE COPY
O. M. E.
RECEIVED AUG 12 1959

DATE	INITIALS	

August 6, 1959

Memorandum

TO: J. W. Thomsand, Executive Officer, OME Field Team, Region III

From: H. E. Howes

Subject: Docket No. MMSA 4981 (Lead-Zinc-Copper) Contract No. Bm-R1218
New Park Mining Company (Mayflower Mine) Wasatch County, Utah

This memorandum is written in compliance with your verbal request for information regarding the installation of the transite pipe, and pumps and pump columns of Items Nos. 1 and 2 of the contract.

Item No. 1, provides for the installation of 7,140 feet of 16-inch transite pipe in the Mayflower tunnel (800 level). The transite pipe was designed to carry the mine water discharged from the 800-foot level plus the additional mine water to be developed by the proposed drifting and crosscutting on the 2005 level. The mine water was formerly discharged through a ditch, of limited capacity, in the Mayflower tunnel. In order to do work in the mine that would develop more water, a discharge facility of greater capacity had to be devised. It was possible either to enlarge the ditch or to install a pipe of sufficient size to carry the increased flow. The estimated cost of pipe and installation was less than the estimated cost of ditch enlargement. Therefore the pipe was used.

A labor contract between the company and the lessees was written to specify the position of installation of the 16-inch transite pipe and the terms of payment. The pipe was to be installed on a ballast of pea gravel at track grade, with the pipe bell as higher in elevation than the track bell, at a unit price of $2.00 per lineal foot plus fringes of 25 cents per lineal foot. Supervision at $[illegible] per month was also allowed. It was mutually understood by the company and the lessees that the pipe would be laid in the old water ditch, and that the old water ditch would be cleaned out and deepened so that the top of the pipe would be at the proper elevation, and that installation, ballasting and the downs would then be accomplished. Much of the Mayflower tunnel requires timber support. The old water ditch had been constructed in such a manner that the supporting timbers were not disturbed by the installation of the 16-inch transite pipe. However, a condition encountered, unforeseen by either the company or the lessees, caused considerable extra labor; certain of the old timbers had been installed in such a manner that they had to be removed to make room for the pipe, and new timbers had to be installed to clear the pipe. This work required several shifts more than would have been necessary under normal conditions, and the cost is considered by the company and inspecting engineer to be reasonable and necessary.

Item No. 2, as revised by Amendment No. 1 to the contract, states that installation in the shaft of a 12-inch steel water column from the 2005 level to the 1650 level, and a 10-inch steel water column from the 1650 level to the 800 level (Mayflower tunnel) shall be accomplished; also, that two 350-HP pumps shall be installed on the 1650 level and that two 450-HP submersible pumps shall be installed on the 2005 level. The installation of the pumps and pump columns is necessary to take care of the water expected to be developed by the proposed drifting and crosscutting on the 2005 level.

A labor contract between the company and the lessees was drawn up to specify the method of installation of pumps and pump columns, at a unit price of $2.00 per lineal foot plus fringes of 23 cents per lineal foot. Supervision at $800 per month was also allowed. It was mutually understood and agreed by the company and the lessees that this labor contract applied only to the actual installation of pumps and pump columns. In order to prepare the shaft for the installation it was necessary to slusr out the compartment in which the column was placed and to enlarge the sump on the 2005 level. The shaft compartment sluss-out job involved removal of certain timbers and pipes and realignment of other pipe lines and electric cables. The enlargement of the sump on the 2005 level included dangering, raising, and lateral excavations to make room for the pumps and pump accessories. The preparatory work described took considerable time and was considered to be above and beyond the actual pump and pump-column installation requirements and its cost was considered, by the company and the inspecting engineer, to be reasonable and necessary.

M. H. Howes

M. H. Howes

ec:

NEW PARK MINING COMPANY

KEETLEY, UTAH

SALT LAKE CITY OFFICE
904 WALKER BANK BUILDING

August 1, 1959

Mr. J. W. Townsend, Executive Officer
O. M. E.
Field Team, Region III
224 New Customhouse
Denver 2, Colorado

OME
DEPARTMENT OF THE INTERIOR
AUG 3 - 1959
REGION III
DENVER, COLORADO

Re: Docket No. DMEA 4981
Contract No. Idm - E1218

Dear Mr. Townsend:

I understand a question has been raised regarding additional labor to be claimed under Unit No. 2 of the above referenced contract that would be over and above the sum contracted by New Park Mining Company with the Mayflower Lease, for installation of pumps and accessory equipment.

I am enclosing a copy of a Supplemental Joint Exploration Agreement dated July 1, 1958, between the Mayflower Lease and New Park. You will notice that this includes a price of $2.23 per lineal foot for installation of pumps, hangers and rock bolts.

Prior to the installation of this equipment, it was necessary to clean out one compartment of our shaft to provide the necessary space for the pump column installation. We also had to do some work in the sump on the 2005 level for sufficient room to complete the pump installation. We had a verbal agreement with the Lessees that since this work could not be measured in units, they were to proceed with it as expeditiously as possible and we would reimburse them for their actual labor costs. On this basis, we feel that these labor charges are a justified expense to the DMEA Unit.

Very truly yours,

NEW PARK MINING COMPANY

CLARK L. WILSON,
Vice President

CC: Mr. M. H. Howse

MAYFLOWER LEASE
SUPPLEMENT JOINT EXPLORATION AGREEMENT
DATED OCTOBER 4, 1957
AMENDING MODIFICATIONS DATED AS UNITS NUMBERS 1 AND 2
DATED MAY 1, 1958

UNIT #1

For the mutual benefit of Lessees and Company, it is desired to install a sixteen inch transite water pipe in the main haulage level. The chief purpose of this project is to facilitate water conditions which may be encountered in exploration on the 2005 level.

Specification Unit #1:

Install 7,140 feet of sixteen inch transite pipe in the Mayflower 800 haulage level.

The pipe is to be installed at present track grade and the pipe ball shall be installed at no higher elevation than the ball of the rail.

The pipe will rest on a ballast of pea gravel and will be free from sharp rocks which may tend to damage the transite pipe.

The time limit for completion of this project (Unit #1) must be on or before October 30, 1958.

The Company will pay to the Lessees the following footage prices:

Installation of sixteen inch transite pipe complete including ballast, trenching and necessary tie downs

Unit #1: Labor @ $2.00 per lineal foot.
Fringes @ 11.5% = $0.23 per lineal foot.
Supervision @ $200.00 per month.

UNIT #2

It is desired to install a new ten inch pump column from the 2005 level to the 800 level and connect same to the drainage tunnel pipe. To install two 2,000 gallon capacity submersible pumps on the 2005 level pump station.

To install two new L-M Pumps on the 1630 level pump station.

Specifications for pump installation and column:

Install pumps, pump bases, fittings and accessories as prescribed by the Engineering office.

Install one pipe hanger for every ten foot length of pump column.

Install one rock bolt, chain and turnbuckle around pipe at every station or one per 125 foot intervals.

The time limit for completion of this project (Unit #2) must be on or before August 30, 1960.

The Company will pay to the Lessee the following footage prices for Unit #2:

For the installation of pump column and pumps from the 2005 level to the 1630 level approximately 615 feet of pipe required:

Labor @ $2.00 per lineal foot of pipe.
Fringes @ 11.5% = $0.23 per lineal foot
Supervision @ $200.00 per month

For the installation of pump column and pumps from the 1630 level to the 300 level drainage tunnel pipe approximately 1,005 feet of ten inch pipe required: Same footage price as above.

Total project - Approximately 1,620 feet of pipe and pump installation.

All materials, machinery and equipment will be provided by the Company as specified in our Joint Exploration Agreement.

It is understood this contract does not alter provisions of the Mayflower Lease dated October 3, 1957, or the Amendments thereto, and is subject to all pertinent provisions of said lease agreement.

FOR THE COMPANY:

FOR THE LEASE:

[redacted]

[redacted]

[redacted]

[redacted]

[redacted]

OFFICIAL FILE COPY

Date	Surname	Code

MA Form 7
(12-56)

500

Au ust 5, 1959

um

Associate Solicitor, Division of Minerals Resources

Chief, Division of Minerals

Subject: Preparation of Proposed Amendment No. 4 for Docket No. DMEA-4981, New Park Mining Company, Mayflower Mine, Wasatch County, Utah, Contract No. Idm-E1218, Lead-Zinc-Copper.

Will you kindly prepare a proposed Amendment No. 4 to the cited contract, as follows:

EXPLORATION PROJECT CONTRACT
NEW PARK MINING COMPANY
DOCKET NO. DMEA-4981

AMENDMENT NO. 4

It is agreed this _____ day of _____ 1959, between the United States of America, acting through the Department of the Interior, Office of Minerals Exploration, hereinafter called the "Government" and the New Park Mining Company, hereinafter called the "Operator", that Exploration Project Contract No. Idm-E1218 (Docket No. DMEA-4981), dated June 23, 1958, as amended, hereinafter called the "Contract," is further amended as follows: (effective as of July 17, 1959)

8623

1. In Exhibit "A", under the heading, Description of the Work, item No. 6 is amended to read as follows:

6. Long-Hole Percussion Drilling

An estimated 20,000 feet of long-hole drilling shall be performed to probe the walls of the cross-cuts and drifts. The locations of the holes shall be subject to Government approval.

This amendment shall not be construed to increase the estimated total cost of the project, the aggregate amount which the Government may be required to contribute, nor the amount of any item designated as maximum.

Executed in quintuplicate the day and year first above written.

THE UNITED STATES OF AMERICA

By _____
Acting Director, Office of Minerals Exploration

W. R. Griswold

W. R. Griswold

NEW PARK MINING COMPANY

By _____

Title _____

WRG/er
CC: Docket
Dir Read File
Chron.

UNITED STATES
DEPARTMENT OF THE INTERIOR
OFFICE OF MINERALS EXPLORATION
Building 20 - Federal Center
Denver 25, Colorado

July 28, 1959

Memorandum

TO: Chairman, Operating Committee, OME

From: Executive Officer, OME Field Team, Region III

Subject: Docket No. DMEA 4981 (Lead-Zinc-Copper) Contract No. Idm-E1218, New Park Mining Company (Mayflower Mine) Wasatch County, Utah

Enclosed are the original and two copies of a joint memorandum dated July 21, 1959, from M. H. Howes, Mining Engineer, Bureau of Mines, and J. W. Hasler, Geologist, Geological Survey, pertaining to the Operator's request of July 15, 1959, for an amendment to the contract to modify the description relative to the long hole percussion drilling.

The provision in the contract, relative to the drilling, which stipulates that fan intervals shall not be less than 300 ft., was added by the Washington Office in preparing the contract; therefore, preparation of an amendment to modify that requirement is not considered within the authority delegated to this office; therefore, the matter is forwarded for your consideration and appropiate action, with the recommendation that an amendment be prepared to eliminate the 300 ft. minimum fan interval, and substitute that the location of the holes shall be subject to Government approval.

J. W. Townsend

Enclosure

OFFICIAL FILE COPY
O. M. E.
RECEIVED JUL 31 1959

DATE	INITIALS	CODE
7-31	gad	220
		130
"	Mrs Wood	500

OME
DEPARTMENT OF THE INTERIOR
JUL 23 1959
REGION III
DENVER, COLORADO

UNITED STATES
DEPARTMENT OF THE INTERIOR
BUREAU OF MINES
REGION III

DENVER EXPERIMENT STATION

BUILDING 20, FEDERAL CENTER
DENVER 25 COLORADO

July 21, 1959

Memorandum

To: J. W. Townsend, Executive Officer, OME Field Team, Reg. III

From: M. H. Howes
J. W. Hasler

Subject: Docket No. DMEA 4981 (Lead-Zinc-Copper) Contract Idm-E1218, New Park Mining Company (Mayflower Mine) Wasatch County, Utah — Request for amendment to the contract.

Under Exhibit "A" of the contract, Item 6 provides for long-hole drilling as follows: "An estimated 20,000 feet of long-hole drilling shall be performed to probe the walls of the crosscuts and drifts. Fan intervals shall not be less than 300 feet."

The operator objects to the requirement that the fan interval be not less than 300 feet, on the grounds that it is too restrictive. Experience has shown that although close spacing of percussion drill holes is not always necessary, it does often greatly aid in tracing complex structures and in determining the trend of mineralized zones. Geologic information obtained from one drill hole helps to plan intelligently the location of subsequent holes.

It is therefore recommended that the contract be amended to delete the sentence under Exhibit "A", Item 6, which reads: "Fan intervals shall not be less than 300 feet," and substitute: "The location of holes shall be subject to Government approval."

OFFICIAL FILE COPY
O. M. E.
RECEIVED JUL 31 1959

DATE	INITIALS	CODE
7-31	gad	220
		130
		500

M. H. Howes
M. H. Howes
Mining Engineer

J. W. Hasler
J. W. Hasler
Member Field Team

DMEA Form 7
(12-56)

OFFICIAL FILE COPY

Date	Surname	Code
7-28	gad	220
"	Received	500

JUL 28 1959

Memorandum

To: Mr. Donald T. Finch, OME Auditor

From: E. D. Talbert, Acting Chief (Signed) E. D. Talbert
Contract Administration and Audit Division

Subject: Docket No. DMEA-4981 (Lead-Zinc-Copper)
New Park Mining Company
(Mayflower Mine)
Wasatch County, Utah
Contract No. Idm-E1218

Your recent interim audit of the subject contract allowed net additional costs aggregating $7,776.67, of which $7,037.00 are man-shift labor costs allocated to the contract's work item no. 2, pumps and pump column installation. The only explanation in your audit report is that such additional costs cover preparation of shaft, preparation of level, and installing power cable.

These additional labor costs are more than double the $3,026.00 claimed by the Operator for the column installation on a footage basis. Also, the total costs for the pumps and pump installation apparently are considerably in excess of such costs as anticipated at the time the contract was drafted. Your report, however, states that both the examining engineer and the Executive Officer consider such costs as reasonable and necessary.

In view of questions being raised relative to these additional costs a more detailed explanation and specific identification of the "preparation" work would be appreciated.

EDTalbert/GMcC
July 28, 1959

cc: Docket
Director's Reading File
CA & A Division

224 New Customhouse
Denver 2, Colorado
July 17, 1959

Memorandum

TO: J.W. Hasler
M.E. Rowe } w/enclosures

From: Executive Officer, OME Field Team, Region III

Subject: Docket No. MMSA 4981 (Lead-Zinc-Copper) Contract Idm-X1218
New Park Mining Company (Mayflower mine) Wasatch County, Utah

Enclosed is a copy of the Operator's letter of July 15, 1959, requesting an Amendment to the contract to modify the description pertaining to spacing of long hole percussion drilling.

Please submit a Joint Memorandum Report containing your recommendations in the matter.

Original signed by
J. W. TOWNSEND

J. W. Townsend

Enclosure

JWT:ltm

cc: Chmn. Op. Comm. (2)
Corres. file, Reg. III
Susp. file
Chron.

OFFICIAL FILE COPY
O. M. E.
RECEIVED JUL 20 1959

DATE	INITIALS	CODE
7-20	gad	220
		130
7-22	G	500

OFFICIAL FILE COPY
O. M. E.
RECEIVED JUL 20 1959

DATE	INITIALS	CODE

OME
DEPARTMENT OF THE INTERIOR
JUL 17 1959
REGION III
DENVER, COLORADO

July 15, 1959

Mr. J. W. Townsend
Executive Officer, O.M.E.
Field Team Region III
224 New Customhouse
Denver 2, Colorado

Re: Docket No. DMEA 4981
Contract No. Idm - E1218

Dear Mr. Townsend:

Under Exhibit "A" of the above referenced contract, Item 6 provides for long hole percussion drilling. It provides as follows: "An estimated 20,000 feet of long hole drilling shall be performed to probe the walls of the crosscuts and drifts. Fan intervals not less than 300 feet".

Our supervisory personnel and geologists have been studying this requirement on the "fan interval" and believe that it is too restrictive. I believe there has been some discussion of this matter with your field engineers, who also agree.

It has been our experience in doing this same type of work in our present producing areas, that information obtained from one hole will help plan additional holes, and we quite often find that close spacing of percussion drilling is a great aid in delineating mineralized areas as well as helping to study structure and stratigraphy.

We therefore propose that the sentence regarding fan interval be amended somewhat as follows: "Fan interval hole locations and depths shall be determined from geological data observed, and spacing will be specified by the company geologist in charge of the operation.

This will certainly expedite this phase of the operation and you can be assured that we will continue to cooperate with your office in keeping you informed of our plans.

Very truly yours,

CLARK L. WILSON,
Vice President

CLW:ih

OFFICIAL FILE COPY
O. M. E.
RECEIVED JUL 20 1959

DATE	INITIALS	CODE
7-20	gad	220
7/20	[illegible]	800
7-22	G	500

224 New Customhouse
Denver 2, Colorado

July 14, 1959

Mr. Clark L. Wilson
Vice-President
New Park Mining Company
904 Walker Bank Building
Salt Lake City, Utah

Re: Docket No. DMEA 4981 (Lead-Zinc-Copper)
Contract No. Idm-E1218
New Park Mining Company
(Mayflower Mine)
Wasatch County, Utah

Dear Mr. Wilson:

Reference is made to your letter of June 24, 1959, wherein you request Government concurrence in three proposed percussion drill hole locations.

On June 29, 1959, while at the property, M. H. Howes, Mining Engineer, Bureau of Mines, discussed the matter of the long hole drilling with your Mr. Gale A. Hansen, as a result of which, Mr. Howes advises me that the matter of the long hole drill location will be deferred for the present pending the forwarding by your company of a request for an Amendment to the contract for certain changes concerned with the percussion long hole drilling.

Under the circumstances, no action will be taken by this office on your request of June 24, 1959, until further advised by your company.

Very truly yours,

Original signed by
J. W. TOWNSEND

J. W. Townsend
Executive Officer, OME
Field Team, Region III

JWT:ltm
cc: Chmn. Op. Comm. (2) w/cpy Oper's ltrs. 6/24/59 & Howes Memo. 6/13/59
Harshman) Oper's ltr. forwd. 6/26/59
OME/DFC) & cpy Howes ltr. 6/13/59
Corres. file, Reg. III
Susp. file
Chron.

OME
DEPARTMENT OF THE INTERIOR

JUL 14 1959
REGION III
DENVER, COLORADO

July 13, 1959

Memorandum

To: J. W. Townsend, Executive Officer, OME Field Team, Reg. III

From: M. H. Howes

Subject: Docket No. DMEA 4981 (Lead-Zinc-Copper) Contract Idm-E1218, New Park Mining Co., (Mayflower Mine) Wasatch County, Utah -- Long hole drilling

On June 29, 1959, at the time of inspection of the Mayflower mine for the May 1959 progress report, the operator's proposal of June 24th for long hole drilling was discussed with Gale A. Hansen, general superintendent. Mr. Hansen feels that the contract clause covering long hole drilling is not flexible enough to allow necessary exploration. A request for amendment to the contract, to make required changes, will be forthcoming before anything further will be done regarding the long hole drilling.

M. H. Howes
M. H. Howes
Mining Engineer

MHH/mw
cc: 6
Idm-E1218
chron

OFFICIAL FILE COPY
O. M. E.
RECEIVED JUL 20 1959

DATE	INITIALS	CODE

June 24, 1959

OFFICIAL FILE COPY
O. M. E.
RECEIVED JUL 20 1959

DATE	INITIALS	CODE

Mr. J. W. Townsend
Executive Officer, OME
Field Team, Region III
234 New Custom House
Denver 2, Colorado

Re: Docket No. DMRA 4981
Contract No. Idm-21218

Dear Mr. Townsend:

The 2005 level west drift being driven under the above referenced contract has now proceeded northwesterly from the Mayflower shaft station to a point where we expect to turn southwesterly and drift parallel to the Mayflower fissure system.

We think that we will soon need to start some of the percussion type long hole drilling to determine positions of fissure strands, as well as obtain information on rock types. We would like to be sure that our plans for hole locations are approved by OME, and I am enclosing a sketch map indicating the position of the 2005 drift and three proposed hole locations. Your approval of this proposal will be appreciated.

Very truly yours,

NEW PARK MINING COMPANY

Clark L. Wilson
Vice President

CLW:jw
Encl.

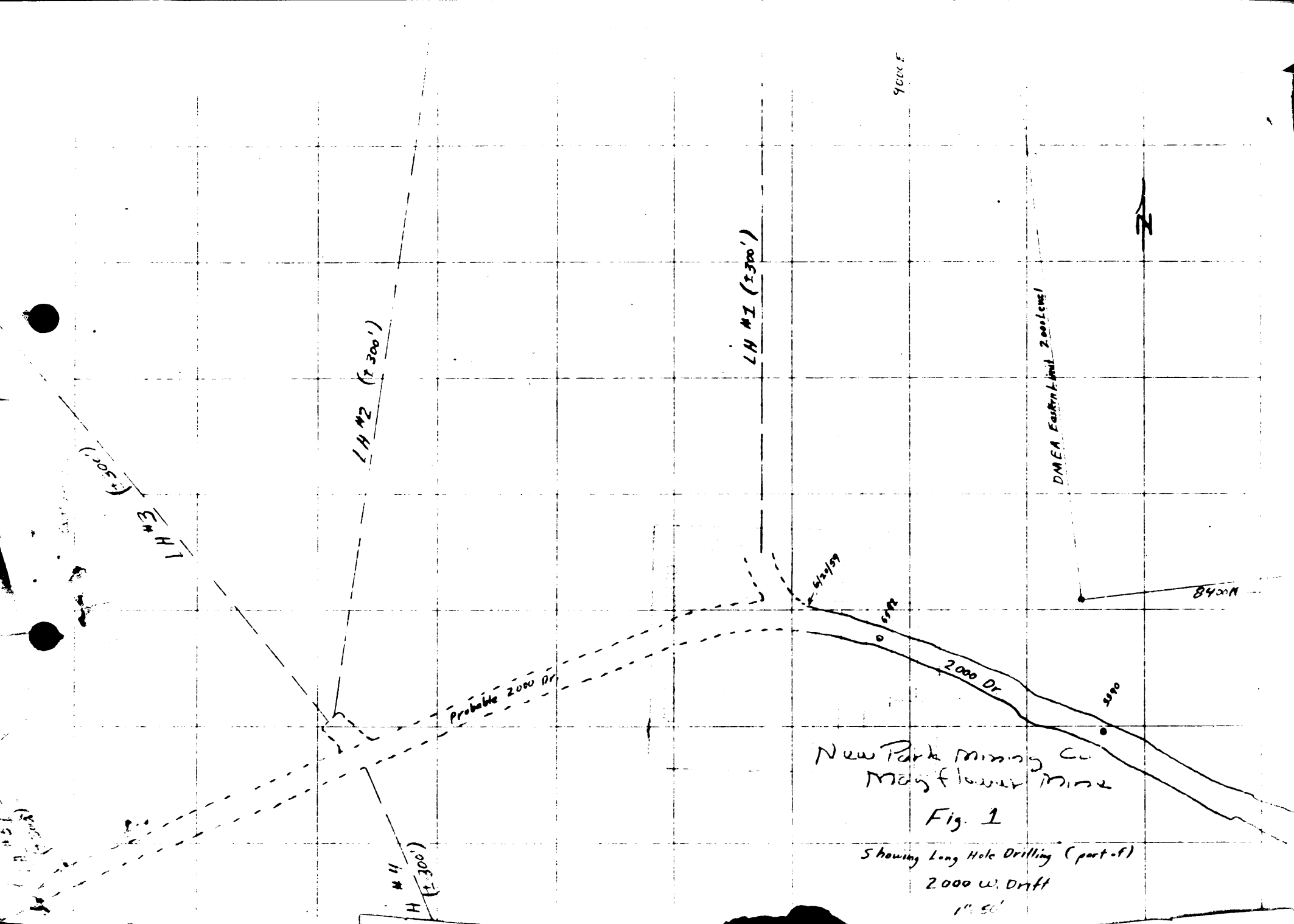

New Park Mining Co
Mayflower Mine

Fig. 1

Showing Long Hole Drilling (part-f)
2000 W. Drift
1" = 50'

OFFICIAL FILE COPY
O. M. E.
RECEIVED JUL 20 1959

DATE	INITIALS	CODE

UNITED STATES
DEPARTMENT OF THE INTERIOR
OFFICE OF MINERALS EXPLORATION
WASHINGTON 25, D. C.

OFFICIAL FILE COPY
O. M. E.
RECEIVED JUL 10 1959

DATE	INITIALS	
7-10	gad	200
7/13	RJ	110
		~~100~~
7-15	R	500

JUL 10 1959

Memorandum

To: Acting Director

From: E. D. Talbert, Acting Chief
Contract Administration and Audit Division

Subject: Docket No. DMEA-4712 (Lead-Zinc)
American Smelting & Refining Company
Contract No. Idm-E1134

and

Docket No. DMEA-4981 (Lead-Zinc-Copper)
New Park Mining Company
Contract No. Idm-E1218

A July 6 communication from Clarence E. Fisher, who is in Region I for the purpose of performing required royalty and interim cost audits, contains the following comment on Contract Idm-E1134, Docket DMEA-4712, American Smelting and Refining Company:

"I am now deep in the A.S. & R. cost audit report and hope to have it ready by the end of the week. I believe consideration should be given to converting that contract to a unit cost basis. All costs, except contract diamond drilling, have proven to be greatly in excess of the rates allowable for Government participation. There does not seem to be any chance of the costs coming down during the remaining period of the contract. This would save a great amount of accounting effort for both the Operator and the Government."

Your consideration of Mr. Fisher's suggestion is solicited and recommended. Amendment of this contract to provide for contribution by the Government on the basis of fixed unit costs, rather than actual costs not in excess of maximum unit costs, appears amply justified by the budgetary situation. Funds for auditors' travel and per diem have been stringently curtailed; and cost audits of large companies such as A.S. & R. are time consuming and expensive. Furthermore, I understand that the budgetary situation may require the elimination of one of this Division's present staff of two auditors.

Consideration of a similar amendment for Contract Idm-E1218, Docket DMEA-4981, New Park Mining Company, also seems appropriate.

Do we have any pending amendments on these contracts?

The June 3, 1959, interim audit report of Donald T. Finch, discloses that the actual costs of drifting are far in excess of the maximum unit costs allowable for contribution by the Government. The total actual cost of 173.5 feet of drifting through March 31, 1959, was $12,121.46, whereas the allowable cost was only $7,807.50 at the maximum rate of $45.00 a foot provided by the contract.

The travel and per diem expenses of Mr. Fisher's trip to Region I will total approximately $870.00; however, the interim audit of A.S. & R. was only an incidental of the trip, which was primarily for urgent royalty audits of Taylor-Knapp, Bunker Hill, and others. On the other hand, Mr. Finch's trip from Denver to Salt Lake City cost $177.13 for travel and per diem and was solely for the interim audit of New Park. Either trip from Washington for a final audit will cost several hundred dollars more.

224 New Customhouse
Denver 2, Colorado

June 26, 1959

OFFICIAL FILE COPY
O. M. E.
RECEIVED JUN 29 1959

DATE		
6/29	a	220
		800
		500

Mr. Clark L. Wilson, Vice-President
New Park Mining Company
904 Walker Bank Building
Salt Lake City, Utah

Re: Docket No. DMEA-4981 (Lead-Zinc-Copper)
Contract No. Min-8218
New Park Mining Company
(Mayflower Mine)
Wasatch County, Utah

Dear Mr. Wilson:

Thank you for your letter of June 24, 1959, regarding the co-mingling of DMEA ore with company ore. We believe that your proposed method of estimating the grade and tonnage of DMEA ore is fair to all concerned.

Please submit to this office each month three copies of a letter showing the number of cubic feet of ore mined in each DMEA heading checked by mine car tallies, together with cut sample assays from all working faces, and grab sample assays from the muck piles, and the total estimated value.

For your convenience we are attaching a table showing the basis for computing DMEA royalty payments.

Very truly yours,

Original signed by
J. W. TOWNSEND

J. W. Townsend,
Executive Officer, OME
Field Team, Region III

Enclosure

HMC:ltm

cc: Chmn. Op. Comm. (2)
Royl. file, E1218
Chron.

OFFICIAL FILE COPY

OME
DEPARTMENT OF THE INTERIOR
JUN 25 1959
REGION III
DENVER, COLORADO

June 24, 1959

Mr. J. W. Townsend
Executive Officer, OME
Field Team, Region III
224 New Custom House
Denver 2, Colorado

Re: Docket No. DMEA 4981
Contract No. Idm-81218

Dear Mr. Townsend:

We have had some discussion in the past several months with Mr. Howse and also with Mr. Finch regarding an accounting problem that may develop as we begin to produce ore on the property included in our above referenced DMEA project.

Our engineers report that development work on the 1380, 1505 and 1630 levels is bringing these particular drift headings within a short distance of the vertical DMEA royalty participation line, as shown on the maps accompanying our contract. We also anticipate that ore will be available on the 2005 level within a reasonably short time.

In analyzing the transportation and hoisting problems of these ores we find that it will be impossible to segregate them from the general mine run for transportation outside and shipment as separate lots to the custom smelter. To try and separate such ores would upset our handling procedures to the point that costs would be exorbitant and make some of this ore impossible to handle.

I have asked our geologists and engineers to analyze this situation and they find from past experience that the tonnage and grade of ores mined from any particular working place can be estimated quite accurately. We propose that in each of these DMEA participation working places that we will determine tonnage by measuring the cubic feet of ore mined and this will be checked by the mine car tally from that working place. Further, we will take a series of systematic cut samples

of the working faces and also grab samples from ore produced in these places.

Our experience in this work indicates that the plus or minus error will be approximately $1.00 per ton, or approximately 5%. As a matter of fact experience indicates that the grab samples and cut samples are on the high side compared to smelter returns as there is some dilution of mining. This will be to the advantage of the DMEA in making repayments. We do not feel that the amount of money will be detrimental to New Park, in fact it would tend to pay off the DMEA loan a bit sooner.

We feel that this is an equitable and sensible solution and would appreciate your approval in the near future to eliminate any misunderstanding when ore returns do come from these DMEA areas.

Very truly yours,

NEW PARK MINING COMPANY

Clark L. Wilson
Vice President

CLW:jw

MME Form 7
(10-58)

OFFICIAL FILE COPY

Date	Surname	Code
6/16	G	220
	~~wpb~~	~~500~~

JUN 16 1959

Memorandum

To: Mr. Donald T. Finch, OME Auditor

From: E. D. Talbert, Acting Chief (Signed) E. D. Talbert
Contract Administration and Audit Division

Subject: Docket No. DMEA-4981 (Lead-Zinc-Copper)
New Park Mining Company
Contract No. Idm-E1218

Your interim Audit Report and Certificate on the subject contract is acceptable and normal distribution is authorized after revising the last portion of the second paragraph of the Certificate to read as follows (and as suggested in my June 8 memorandum):

Additional cost allowable	7,776.67	
Less: Offset used above	3,980.10	3,796.57
Total acceptable cost, if claimed		$64,117.18

This revision has been made on the Washington copies.

EDTalbert/ama
June 16, 1959

Copy to: Docket
Director's Reading File
Code 800

43683

MME Form 7
(10-58)

OFFICIAL FILE COPY

Date	Surname	Code
		220
6/9	W	225
6/9	wrpb.	500

JUN 8 1959

Memorandum

To: Mr. Donald T. Finch, OME Auditor

From: E. D. Talbert, Acting Chief (Signed) E. D. Talbert
Contract Administration and Audit Division

Subject: Docket No. DMEA-4981 (Lead-Zinc-Copper)
New Park Mining Company
Contract No. Idm-E1218

Your interim audit report covering the subject contract indicates a job well done. It is, therefore, with regret that I find it necessary to return the report for correction of an error due to misinterpretation of a contract provision.

On page 10 of the report, in justification of your disallowance of repairs to equipment under category (7), the second sentence of Article 6 of the contract is cited. This sentence refers to category or sub-category and not to elements. There is no sub-category under category (7), and, as Exhibit "A" contains estimates for elements or items of fringe benefits, assaying, and accounting under this category, any reasonable and necessary items of miscellaneous costs are allowable. Accordingly, the repairs to equipment in the amount of $392.50 appear properly for allowance as costs of the project.

For your information in this connection, it has been the practice to use the words "none except" in an Exhibit "A" whenever a category or sub-category was to be restricted to certain specified items. See Idm-E1148, DMEA-4328, D.A.C. Uranium Company, for example.

A few additional errors, apparently typographical, also require correction. These are on:

(a) Page 1, 2nd paragraph, 3rd line, where it appears that "and" should replace the comma between "McMillan" and "Mr.";

(b) Page 1, last paragraph, 3rd line, where semicolon should be a comma;

(c) Page 3, 1st paragraph, 3rd line, where spelling of "recomputed" should be corrected;

(d) Page 3, 3rd line from bottom, where capital "E" should be removed from "Engineering";

(e) Page 9, last paragraph, where total repairs claimed should be corrected to "$446.96";

(f) Page 11, penultimate paragraph, 4th and 6th lines, where spelling of "reinstated" and "reinstatement" should be corrected; and

(g) Page 2 of summary Exhibit A, where total of column 1 should be corrected to "$60,320.61".

It is suggested, also, that the last portion of the factual data on your audit certificate be revised as follows, in order to clearly tie in with your excellent summary:

"Additional cost allowable	$7,776.67	
Less: Offset used above	4,359.13	3,417.54
Total acceptable cost, if claimed		$63,738.15"

The amounts above, of course, will be changed as a result of the correction referred to in the second paragraph of this letter.

If at all possible the certificate should be restricted to one page. I believe this can be done, if the heading is moved near the top of the page and the need of the last paragraph is eliminated by inserting "if the project is otherwise accepted as having met the terms of the contract," between "Therefore," and "payments" in the preceding paragraph.

Enclosures

EDTalbert/ama
June 8, 1959

Copy to: Docket
Director's Reading File
CA & A Division

OFFICIAL FILE COPY O. M. E. RECEIVED APR 27 1959		
DATE	INITIALS	CODE
4/27	G	220
4/28	WPB	500

224 New Customhouse
Denver 2, Colorado
April 23, 1959

Mr. Clark L. Wilson,
Vice President
New Park Mining Company
904 Walker Bank Building
Salt Lake City, Utah

Re: Docket No. DMEA 4981
(Lead-Zinc-Copper)
Contract No. Idm-E1218
New Park Mining Company
(Mayflower mine)
Wasatch County, Utah

Dear Mr. Wilson:

Enclosed is the "Operator's Copy" of Amendment No. 3 which has been executed to provide for excavation of diamond drill stations.

Very truly yours,

Original sig...
J. W. TOWNSEND

J. W. Townsend
Executive Officer, OME
Field Team, Region III

Enclosure

JDC:hmh

cc: Chmn. Op. Comm. (2), w/Government's and Audit's copies Amendment No. 3
Finance Office, Reg. III)
Harshman) w/copy Amendment No. 3
Howes, OME/SLC)
Corres.file, Reg. III)
Cooper
Chron

OFFICIAL FILE COPY O. M. E. RECEIVED APR 23 1959		
DATE	INITIALS	CODE
4/23	a	220
4/24	[illegible]	800
4/24	[illegible]	500

224 New Customhouse
Denver 2, Colorado
April 20, 1959

Mr. Clark L. Wilson,
Vice President
New Park Mining Company
904 Walker Building
Salt Lake City 11, Utah

Re: Docket No. OMTA 4-11 (Lead-Zinc-Copper)
Contract I6m-E1218
New Park Mining Company
(Mayflower mine)
Wasatch County, Utah

Dear Mr. Wilson:

Enclosed are the Government's, Audit's, Finance Office, and Field Team's copies of proposed Amendment No. 3, which has been prepared in reference to your letter of February 12, 1959, to provide for excavation of diamond drill stations under the "crosscutting" category. This does not alter the contract provision that the locations, directions, inclinations and depths of the holes are subject to prior Government approval.

If the proposed amendment is satisfactory all copies are to be signed by an official of New Park Mining Company authorized to sign such an instrument, the signer's title inserted, the corporate seal affixed and all copies promptly returned to this office; upon receipt of which the "Operator's copy" will be forwarded to you.

Very truly yours,

Original signed by
J. W. TOWNSEND

J. W. Townsend
Executive Officer, OME
Field Team, Region III

Enclosures

JDC:hmh

cc: Chmn. Op. Comm. (2)
Harshman
Howes, OME/SLC
Corres. file, Reg. III
Cooper
Chron

OFFICIAL FILE COPY
O. M. E.
RECEIVED APR 28 1959

DATE	INITIALS	[illegible]
[illegible]	[illegible]	[illegible]
[illegible]	[illegible]	[illegible]
[illegible]	[illegible]	[illegible]
[illegible]	[illegible]	[illegible]
[illegible]	[illegible]	[illegible]
[illegible]	[illegible]	[illegible]
[illegible]	[illegible]	[illegible]

MME Form 7
(10-58)

OFFICIAL FILE COPY

Date	Surname	Code
4/10	Griswold	500
4/10	Talbert	800
4/14	Martin	130
"	Johnson	110
		~~100~~
		~~HB~~
4/15	C	220
		500

500

APR 14 1959

Memorandum

To: Executive Officer, OME Field Team, Region III

From: ACTING Chairman, Operating Committee, OME

Subject: Docket No. DMEA-4981 (Lead-Zinc-Copper)
New Park Mining Company
Mayflower Mine
Wasatch County, Utah
Contract No. Idm-E1218

This is in reference to your teletype of April 1 and ours of April 3, 1959, covering the cited docket. We are enclosing a proposed amendment No. 3 which provide for the inclusion of diamond drill stations in the "crosscut" category.

The original and four copies of the proposed amendment are enclosed which have been signed by the Acting Director, for the Government. If it meets with your approval, kindly present it to the Operator for approval and signature and, when completed, distribute the copies in the usual manner. Otherwise, and if any proposed change should lie beyond your delegated authority, return all copies to us with your recommendations. Also we are enclosing two extra copies for the use of the Field Team.

/s/ W S Martin (GHB)

Enclosures

APPROVED:

(sgd.) G. W. Josephson (GHB)
Member, Bureau of Mines

Thor H. Kiilsgaard (GHB)
Member, Geological Survey

WRGriswold/er 4/10/59
Copy to: Docket
Dir Read File
Op. Committee
Mr. Bishop, USBM
Mr. Kiilsgaard, USGS
Chron.

43683

OFFICIAL FILE COPY
O. M. E.
RECEIVED APR 15 1959

DATE	INITIALS	CODE
4/15	C	220
4/15	~~copy~~	~~500~~

224 New Customhouse
Denver 2, Colorado
April 13, 1959

Mr. Clark L. Wilson,
Vice President
New Park Mining Company
904 Walker Building
Salt Lake City 11, Utah

Re: Docket DMEA 4981 (Lead-Zinc-Copper)
Contract No. Idm-21218
New Park Mining Company
(Mayflower mine)
Wasatch County, Utah

Dear Mr. Wilson:

Enclosed is the "Operator's copy" of Amendment No. 2 to the captioned contract, which has been executed to provide for the use of either (1) standard drift sets or (2), rock bolts and head plates, to support the drifts and crosscuts driven under the contract.

Very truly yours,

Original signed by
J. W. TOWNSEND

J. W. Townsend
Executive Officer, OME
Field Team, Region III

Enclosure

JDC:hmh

cc: Chmn. Op. Comm. (2) w/Government's and Audit copies of Amendment No. 2
Finance Office, Region III)
Harshman) w/copy of Amendment No. 2
Howes, OME/SLC)
Corres.file, Reg. III
Cooper
Chron

MME Form 7
(10-58)

OFFICIAL FILE COPY

Date	Surname	Code

April 10, 1959

Memorandum for the Docket

From: Chief, Division of Base Metals

Subject: Justification of Amendment No. 3 for
Docket No. DMEA-4981 (Lead-Zinc-Copper)
New Park Mining Company
Mayflower Mine
Wasatch County, Utah
Contract No. Idm-E1218

Amendment No. 3 has been prepared to permit the inclusion of diamond drill stations in the "crosscut" category. It is estimated that a total footage of 300 will be required for such stations.

W. R. Griswold

WRG/er
CC: Docket
Dir Read File
Chron.

43683

OFFICIAL FILE COPY
RECEIVED APR 13 1959
DATE
4/13 C 220
4/13 800
4/14 500

[illegible] Ave Contractors
Denver 2, Colorado
April 7, 1959

Mr. Clark L. Wilson, Vice President
New Park Mining Company
904 Walker Bank Building
Salt Lake City 11, Utah

In: Contract No. [illegible] (Long-Hole Stopes), Contract No. [illegible], New Park Mining Company (Employer-Lessee), Beaver County, Utah

Dear Mr. Wilson:

Enclosed are the Government's, Audit's, Finance Office and Field Team's copies of proposed Amendment No. 2 to the captioned contract, which has been prepared in response to your letter of February 12, 1959, to provide for the use of either (1), standard drift sets or (2), rock bolts and head plates, to support the drifts and crosscuts driven under the contract.

In reference to your request for increase in the monthly and the total depreciation allowance, we regret to inform you that the amounts cannot be increased for the following reasons:

1. The maximum allowable unit cost of $75.00 per foot provided for drifting and crosscutting, is in line with the maximum costs which we have previously accepted in the district for comparable drifting.

2. The depreciation allowance, presented on a footage basis, amounts to $5.55 per foot of drifting and crosscutting, which appears to the Government to be a reasonable allowance.

A separate amendment is in preparation which will provide for crosscutting footage for preparation of drill stations in the 8th-A and 8005 level drifts. Crosscutting footage presently provided for exploration on the 8005 level will be reduced by the footage used for preparation of the drill stations.

The total allowable cost of the contract cannot be increased; consequently, funds for any work not presently provided for must be obtained through reduction of costs, or by reduction in the amount of other work. Prior Government approval must be obtained for any appreciable change in the project work.

If the proposed amendment is satisfactory, all copies are to be signed by an official of your company who is authorized to sign such an instrument, the signer's title inserted, the corporate seal affixed, and all copies promptly returned to this office; upon receipt of which, the "Operator's Copy" will be forwarded to you.

If the proposed amendment is not satisfactory, please return all copies promptly to this office, unsigned, together with your objections thereto.

Very truly yours,

Original signed by
J. W. TOWNSEND
J. W. Townsend
Executive Officer
GMX Field Team, Region XII

Enclosures

JWC/rf
cc: Chem. Op. Comm. (2)
Barshman
Howes, GMX/SIC
Curves. file, Reg. III
Cooper
Chrom.

MME Form 7
(10-58)

OFFICIAL FILE COPY

Date	Surname	Code

500

April 6, 1959

Memorandum

To: Associate Solicitor, Division of Minerals Resources

From: Chief, Division of Base Metals

Subject: Preparation of Proposed Amendment No. 3 for Docket No. DMEA-4981, New Park Mining Company, Mayflower Mine, Wasatch County, Utah, Contract No. Idm-E1218, Lead-Zinc-Copper.

Will you kindly prepare a proposed Amendment No. 3 to the cited contract, as follows:

EXPLORATION PROJECT CONTRACT
NEW PARK MINING COMPANY
DOCKET NO. DMEA-4981

AMENDMENT NO. 3

It is agreed this 1st day of April, 1959, between the United States of America, acting through the Department of the Interior, Office of Minerals Exploration, hereinafter called the "Government," and the New Park Mining Company, hereinafter called the "Operator," that Exploration Project Contract No. Idm-E1218 (Docket No. DMEA-4981), dated June 23, 1958, as amended, hereinafter called the "Contract," is further amended as follows:

43683

1. In Exhibit "A" under the heading, Description of the Work, item No. 3 is revised to read as follows:

3. Drifting and crosscutting.

Drift and crosscut westerly on the 2005 level an estimated 6,000 feet. Also crosscut approximately 2,600 feet additional on the 2005 level and on the 801-A level, to explore favorably mineralized areas and for diamond drill stations. The total of all drifting and crosscutting may not exceed 8,600 feet. The drifts and crosscuts initially shall be approximately 7 feet by 10 feet in rock section, but periodically the bottom two feet may be back filled in connection with construction of a drainage ditch. Drifts and crosscuts shall be supported as necessary using standard drift sets or rock bolts and head plates.

This amendment shall not be construed to increase the estimated total cost of the project, the aggregate amount which the Government may be required to contribute, nor the amount of any item designated as maximum.

Executed in quintuplicate the day and year first above written.

THE UNITED STATES OF AMERICA

By_____
Acting Director, Office of Minerals Exploration

NEW PARK MINING COMPANY

BY_____

Title_____

W. R. Griswold

W. R. Griswold

MME Form 7
(10-58)

OFFICIAL FILE COPY

Date	Surname	Code
4/3	[illegible]	500
4/3	Selfridge	130
4	[illegible]	110
		~~100~~
		~~HB~~
4/6	C	220
		500
4/3	[illegible]	130

APR 3 [illegible]

T E L E T Y P E

WRGriswold, Rm 4442, Ext. 3669

XXXXXXXXXX XXXX XXXXXXXXXXX
XXXXXXXX XXXXXXX XXXXXXXXX

OMS - Division of Base Metals
4/3 Nelson (130)
1490108-Salaries and Expenses, Office of Minerals Exploration, Interior, 1959

Date:

To: Mr. J. W. Townsend, Executive Officer, OMS Field Team, Region III, 224 New Customhouse Bldg., Denver 2, Colorado.

Reurtt April 1, 1959, Docket DMEA 4981, New Park Mining Company, Contract Idm-E1218. We will prepare necessary amendment.

George C. Selfridge

Chairman, Operating Committee (HB)

WRGriswold/er 4/2 & 3/59
Copy to: Docket
Dir Read File
Op. Committee
Mr. Bishop, USBM
Mr. Kiilsgaard, USGS
Chron.

43683

MME Form 7
(10-58)

OFFICIAL FILE COPY

Date	Surname	Code
4/2	Griswold	500
		130
		110
		100
		220
		500

WRGriswold, Rm ~~4442, Ext. 3669~~

OME * Division of Base Metals

1490108-Salaries and Expenses, Office of Minerals Exploration, Interior, 1959

T E L E T Y P E

DATE:

To: Mr. J. W. Townsend, Executive Officer, OME Field Team, Region III, 224 New Customhouse Bldg., Denver 2, Colorado.

Reurtt April 1, 1959, Docket DMEA 4981, New Park Mining Company, Contract Idm-E1218. ~~No amendment necessary.~~

Chairman, Operating Committee

WRGriswold/er 4/2/59
Copy to: Docket
Dir Read File
Op. Committee
Mr. Bishop, USBM
Mr. Kiilsgaard, USGS
Confirmation Copy
Chron.

43683

Re: DM&G-4981
New Park

If proposed D.D. crosscuts are in "favorable mineralized areas" on the 2005 level, no amendment is necessary.

If any part of work is in barren ground or on 801-A level, amendment is required.

Talbot
4/3/59

DMEA

DN 235 BUR MINES 4-1-59 11-30

RE DOCKET DMEA ~~XXXX~~3XXXXXX 4891, CONTRACT IDM-E1218, NEW PARK MINING CO.
FIRST PARAGRAPH, PAG XXX PAGE 2, YOUR LETTER OF 3"XXXXX 3-23-59.
IT APPEARS THAT AMENDMENT WILL BE REQUIRED TO PROVIDE FOR USE OF PART
OF CROSSCUTTING FOOTAGE FOR PREPARATION OF DRILL STATIONS IN 801-A
AND 2005 LEVEL DRIFTS. WILL APPRECIATE EARYXX EARLY ADVICE BY TELETYPE.

J W TOWNSEND

OFFICIAL FILE COPY
O. M. E.
RECEIVED APR 2 1959

DATE	INITIALS	CODE
4/2	C	220
		500

Denver, Colorado

BUREAU OF MINES
MAIL ROOM
WASHINGTON, D. C.

APR 1 2 33 PM '59

OFFICIAL FILE COPY
O. M. E.
RECEIVED MAR 26 1959

DATE	INITIALS	CODE
3/26		220
3/26		800
3/27		500

224 New Customhouse
Denver 2, Colorado
March 24, 1959

Mr. Clark L. Wilson, Vice President
New Park Mining Company
904 Walker Bank Building
Salt Lake City 11, Utah

Re: Docket No. ~~DMEA 4981 (Lead-Zinc-~~
Copper)
Contract Idm-E1218
New Park Mining Company
(Mayflower mine)
Wasatch County, Utah

Dear Mr. Wilson:

Form MF-104, Operator's Monthly Report and Voucher for February 1959, has been received in this office and is being processed for payment. The following deduction has been made:

Suspension, Drifting and Crosscutting:

As established in EXHIBIT "A" to the contract, the maximum allowable average unit cost for Drifting and Crosscutting is $45.00 per foot. The reported cost for Drifting and Crosscutting for February 1959, is in excess of the maximum allowable average unit cost; therefore, in accordance with item (c) of ANNEX II to the contract, the cost in excess of $45.00 per foot is suspended, subject to possible reinstatement at a later date, to the extent that subsequent reported costs for Drifting and Crosscutting may fall below the maximum allowable average unit cost. Any reinstatements of this nature will be made automatically, without special action on your part.

You will be further advised of the details of the above deduction, by means of an Administrative Audit Difference Statement, which will be forwarded by the Finance Office, Region III.

The February 1959, report does not contain an engineering-geologic map showing progress for the period, as required under Article 7(b) of the contract. In the future, monthly progress reports and vouchers will not

OFFICIAL FILE COPY
O. M. E.
RECEIVED MAR 28 1966
DATE

be processed for payment unless accompanied by the required map. Your next report must contain a map showing the February 1959 progress, as well as progress for the current reporting period.

Very truly yours,

Original signed by
J. W. TOWNSEND

J. W. Townsend
Executive Officer, OME
Field Team, Region III

JDC:hmh

cc: Chmn. Op. Comm. (2)
Harshman (2)
Howes, OME/SLC
Corres. file, Reg. III
Cooper
Chron

E Form 7
-58)

OFFICIAL FILE COPY

Date	Surname	Code
3/10	Iwanowski	500
3-11	Chandler	800
3/20	[illegible]	130
"	Johnson	110
		~~100~~ 340
3/23	C	220
		500

500

MAR 23 1959

MEMORANDUM

To: Executive Officer, OME Field Team, Region III

From: Chairman, Operating Committee

Subject: Docket No. DMEA-4981 (Lead-Zinc-Copper)
New Park Mining Company
Mayflower Mine
Wasatch County, Utah
Contract No. Idm-K1216

This is in reference to your memorandum of February 19, 1959, covering the Operator's letter of February 12, 1959. We have prepared a proposed Amendment No. 2 to the cited contract, which will permit rock bolting in lieu of timbering, when desirable. We are enclosing the original and four copies of the proposed amendment, which have been signed by the Acting Director, for the Government. Also enclosed are two extra copies for the use of the Field Team.

If the amendment meets with your approval, kindly present it to the Operator for approval and signature and, when completed, distribute all the copies in the usual manner. Otherwise, and if any proposed change should lie beyond your delegated authority, return all copies to us with your recommendations.

Regarding the other requests of the Operator, we mentioned the matter of the depreciation of the Mayflower mine installed equipment in the next to the last paragraph of our June 23, 1958, letter to you. We are quite willing to accept the Operator's contention that such installed equipment could be considered as eligible for depreciation consideration. Nevertheless, in establishing the total allowed cost for any exploration project we, at all times, attempt to conform to our costs of similar projects in the district in question. Hence, when we allowed a total maximum drifting and crosscutting cost of $45.00 per linear foot for openings of this size (7' x 10'), we allowed about the maximum which we have accepted in this district. Likewise, we should point out that the allowable total of $47,700.00 for depreciation account is equal to $5.55 per foot, which certainly is not niggardly. Therefore, we cannot alter the depreciation account of the contract.

43683

With reference to the 300 feet of crosscuts for 15 diamond drill stations, this item was inadvertantly omitted in the rush of preparing a contract at the last minute. However, since a total of approximately 2,600 feet of crosscutting is already allowed in the contract, we use little cause for concern at this time. Of the 2,6000 feet total, after providing 300 feet of crosscuts for diamond drill stations, we would still have 2,300 feet left for lateral exploration.

We are not in a position to increase the amount of the contract, consequently funds for any added work must be obtained from savings in reduced costs or from reduction in the amount of other work.

/s/ George C. Selfridge

(HG)

Enclosures

APPROVED:

H. G. Iverson (HG)
Member, Bureau of Mines

N. E. Nelson (HG)
Member, Geological Survey

WRGriswold/er 3/10 & 13/59
Copy to: Docket
Dir Read File
Op. Committee
Mr. Bishop, USBM
Mr. Kiilsgaard, USGS
Chron.

With reference to the 300 feet of crosscuts for 15 diamond drill stations, this item was inadvertantly omitted in the rush of preparing a contract at the last minute. However, since a total of approximately 2,600 feet of crosscutting is already allowed in the contract, we see little cause for concern at this time. Of the 2,600 feet total, after providing 300 feet of crosscuts for diamond drill stations, we would still have 2,300 feet left for lateral exploration. At this time it is not our policy to add to the sum of existing DMEA contracts unless it can be specifically shown to be to the best interest of the Government. It might be possible that, as this project reached its latter stages, the balance of 2,300 feet available for lateral exploratory crosscutting would be found to be inadequate. Certainly, if such should prove to be the case, it definitely would be to the best interest of the Government to make some added provision. However, at the present time, it is much too soon to speculate upon this possibility.

We are not as a practice to increase the amount of the contract; consequently, funds for any added work must be obtained from savings in reduced costs or from deductions in the amount of other work.

APPROVED:

Member, Bureau of Mines

Member, Geological Survey

WRGriswold/er 3/10/59
Copy to: Docket
Dir Read File
Mr. Bishop, USBM
Mr. Kiilsgaard, USGS
Op. Committee
Chron.

Can we get an
Available with no
specs on bolts
~~for~~ distribution
and averaging over
footages
Rm. Jeffrey

We should
spell out as we
did in Hecla Lost;
so as to avoid
misunderstanding and
further amendments.
See change in last
paragraph of letter. FEJ

Omen-4981

Government's copy

EXPLORATION PROJECT CONTRACT
NEW PARK MINING COMPANY
DOCKET NO. DMEA-4981

AMENDMENT NO. 2

It is agreed this _____ day of _____, 1959, between the United States of America, acting through the Department of the Interior, Office of Minerals Exploration, hereinafter called the "Government," and New Park Mining Company, hereinafter called the "Operator," that Exploration Project Contract No. Idm-E1218 (Docket No. DMEA-4981), dated June 23, 1958, as amended, hereinafter called the "Contract," is further amended as follows:

1. In Exhibit "A" under the heading, Description of the Work, item No. 3 is revised to read as follows:

3. Drifting and crosscutting.

Drift and crosscut westerly on the 2005 level an estimated 6,000 feet, and crosscut approximately 2,600 feet additional in favorable mineralized areas, not to exceed an aggregate of 8,600 feet of drifts and crosscuts. The drifts and crosscuts initially shall be approximately 7 feet by 10 feet in rock section, but periodically the bottom two feet may be back filled in connection with construction of a drainage ditch. Drifts and crosscuts shall be supported as necessary using standard drift sets or rock bolts and head plates.

Add attached Draft. S.C.

~~2. In Exhibit "A" under the heading, Estimated Costs of the Project, the item "Timbering of drifts and crosscuts, $11.00* per linear foot" is deleted and there is substituted in lieu thereof:~~

~~"Timbering ~~Support~~ of drifts and crosscuts, $11.00* per linear foot."~~

~~This amendment shall not be construed to increase the estimated total cost of the project, the aggregate amount which the Government may be required to contribute, nor the amount of any item designated as maximum.~~

Long
Hoffman
Chambers

Executed in quintuplicate the day and year first above written.

THE UNITED STATES OF AMERICA

By_____
Director, Office of Minerals Exploration

NEW PARK MINING COMPANY

By_____

Title_____

With reference to the 300 feet of crosscuts for 15 diamond drill stations, this item was inadvertantly omitted in the rush of preparing a contract at the last minute. However, since a total of approximately 2,600 feet of crosscutting is already allowed in the contract, we see little cause for concern at this time. Of the 2,600 feet total, after providing 300 feet of crosscuts for diamond drill stations, we would still have 2,300 feet left for lateral exploration. At this time it is not our policy to add to the sum of existing DMEA contracts unless it can be specifically shown to be to the best interest of the Government. It might be possible that, as this project reached its latter stages, the balance of 2,300 feet available for lateral exploratory crosscutting would be found to be inadequate. Certainly, if such should prove to be the case, it definitely would be to the best interest of the Government to make some added provision. However, at the present time, it is much too soon to speculate upon this possibility.

APPROVED:

_____
Member, Bureau of Mines

_____
Member, Geological Survey

UNITED STATES
DEPARTMENT OF THE INTERIOR
OFFICE OF MINERALS EXPLORATION

224 New Customhouse
Denver 2, Colorado
March 11, 1959

OFFICIAL FILE COPY
O. M. E.
RECEIVED MAR 13 1959

DATE	INITIALS	CODE
3/13	C	220
3/16	[illegible]	~~500~~

Memorandum

To: Chairman, Operating Committee, OME

From: Executive Officer, OME Field Team, Region III

Subject: Docket No. DMEA 4981 (Lead-Zinc-Copper) Contract Idm-E1218, New Park Mining Company, (Mayflower mine) Wasatch County, Utah

Enclosed are the Government's and Audit copies of Amendment No. 1, which were forwarded by your letter of February 13, 1959, for signature by the Operator.

Copies of the amendment have been distributed to the Operator, the Finance Office and others concerned in Region III.

J. W. Townsend

Enclosures

MME Form 7
(10-58)

OFFICIAL FILE COPY

Date	Surname	Code

500

March 13, 1959

Memorandum

To: Associate Solicitor, Division of Base Metals

From: Chief, Divison of Base Metals

Subject: Re-write of Proposed Amendment No. 2, Docket No. DMEm-4981, New Park Mining Company, Mayflower Mine, Wasatch County, Utah, Contract No. Idm-E1216 (Lead-Zinc-Copper)

You recently prepared the attached Amendment No. 2 at our request. We regret that we must return it and ask that it be re-written as follows:

Under your item 2, please change the

"Support of drifts and crosscuts, $11.00

per linear foot"

to

"Timbering of drifts and crosscuts, $11.00

per linear foot.

Rock bolting, $5.00 per steel rock bolt.

Not more than eight bolts in any five foot linear section

will be allowed as cost for contribution by the Government."

W. R. Griswold

W. Griswold

WRGriswold/er
CC: Docket
Dir Read Eibe
Chron.

43683

MME Form 7
(10-58)

OFFICIAL FILE COPY

Date	Surname	Code

March 10, 1959

Memorandum for the Files

From: Chief, Division of Base Metals

Subject: Justification for Amendment No. 2 for
Docket No. DMEA-4981 (Lead-Zinc-Copper)
New Park Mining Company
Mayflower Mine
Wasatch County, Utah
Contract No. Idm-E1216

In a letter dated February 12, 1959, the Operator requested permission to use rock bolting and head plates instead of timbering, when advisable. We see no reason for denying the Operator's request. The Operator requested an allowance of $5.00 per bolt, but since this is an actual cost contract (with maximums) we see no reason for establish a set rate in this instance.

W. R. Griswold

WRG/er
CC: Docket
Dir Read File
Chron.

43683

MME Form 7
(10-58)

OFFICIAL FILE COPY

Date	Surname	Code

500

March 3, 1959

Memorandum

To: Associate Solicitor, Division of Minerals Resource

From: Chief, Division of Base Metals

Subject: Preparation of Amendment No. 2 for Docket No. DMEA-4981, New Park Mining Company, Mayflower Mine, Wasatch County, Utah, Contract No. Idm-E1216, Lead-Zinc-Copper.

Will you kindly prepare an Amendment No. 2 to the cited contract which will have the following effect:

Under Item 3, bottom of first page of Exhibit "A" the last sentence is

"Drifts and crosscuts shall be timbered as necessary using standard drift sets"

this should be deleted and the following substituted:

"Drifts and crosscuts shall be supported as necessary using standard drift sets or rock bolts and head plates".

On page 3 of Exhibit "A", under the heading Estimated Costs of the Project, we find the statement:

"Timbering of drifts and crosscuts, $11.00* per linear foot.

This should be deleted and the following substituted:

"Support of drifts and crosscuts, $11.00* per linear foot.

W. R. Griswold

W. R. Griswold

WRG/er
CC: Docket
Dir Read File
Chron.

43683

UNITED STATES
DEPARTMENT OF THE INTERIOR
OFFICE OF MINERALS EXPLORATION
224 New Customhouse
Denver 2, Colorado

February 19, 1959

OFFICIAL FILE COPY O. M. E. RECEIVED FEB 24 1959		
DATE	INITIALS	CODE
2/24	C	220
		130
Griswold		500

Memorandum

To: Chairman, Operating Committee, OME

From: Executive Officer, OME Field Team, Region III

Subject: Docket No. DMEA-4981 (Lead-zinc-copper), Contract Idm-E1218, New Park Mining Co. (Mayflower mine), Wasatch County, Utah

Enclosed is the following material pertaining to a proposed amendment to the subject contract:

1. Original and two copies of the Operator's letter of February 12, 1959, with attached schedule of equipment and other property for depreciation under the DMEA contract.

2. Original and two copies of a memorandum dated February 16, 1959, from M. H. Howes, Mining Engineer, Bureau of Mines, pertaining to the proposed amendment.

The Operator requests an amendment to the contract covering the following three items:

1. Increase of the monthly depreciation rate by $765.00 above the $1963.00 monthly rate requested in the Operator's letter of December 23, 1958.

2. Modification of the provision in Exhibit "A" attached to the contract regarding timbering of drifts and cross-cuts in order to provide for the use of rock bolts and headplates in lieu of standard drift sets.

3. An increase in the estimated total cost of the project in order to provide for the preparation of 15 drill stations by 300 feet of drifting at a total cost of $13,500.00.

The Operator's request, as itemized above, will be discussed in the same order, as follows:

This office concurs with the indication in your letter of February 13, 1959 regarding proposed Amendment No. 1, that the presently established

maximum monthly depreciation rate of $1590.00 is a firm commitment and should not be increased; therefore, it is recommended that that part of the Operator's request be denied.

Regarding the modification of the description in Exhibit "A" pertaining to drift and crosscut timbering, it is recommended that the description in the last sentence under item 3 on the first page of Exhibit "A" be modified to permit the use of rock bolts with 4 foot headboards in lieu of standard drift sets where conditions will permit. The Operator requests, and the field engineer recommends that a unit cost of $5.00 a rock bolt be established. However, we cannot see the need for establishing a unit cost for rock bolts, as at present Exhibit "A" of the contract provides for the timbering of drifts and crosscuts to be performed on a cost incurred basis at not to exceed $11.00 per linear foot of supported ground. The use of rock bolts in lieu of standard drift sets may affect a considerable savings to the Government because in some instances a five foot section of drift may only need a few rock bolts to provide adequate support.

Regarding an increase of the estimated cost of the project in order to provide for the preparation of drill sites, we have reviewed the Operator's original application and the examination report, and find that such an item of work was applied for by the applicant and was recommended by the field examiners. However, we are unable to identify provision for the work in Exhibit "A" as presently written unless the cost of drill site preparation is included in the maximum allowable cost of $6.35 per foot for 11,000 feet of diamond drilling under Category (1). At this late date we cannot see how additional funds could be provided for drill site preparation, even though, or if, the item of work may have been inadvertently omitted from the presently established total estimated cost of the project.

Enclosures

J. W. Townsend

W.O.

OME
DEPARTMENT OF THE INTERIOR

UNITED STATES
DEPARTMENT OF THE INTERIOR
BUREAU OF MINES
REGION III

OFFICIAL FILE COPY
O. M. E.
RECEIVED FEB 24 1959

FEB 18 1959
REGION III
DENVER, COLORADO

DATE	INITIALS	CODE

INTERMOUNTAIN
EXPERIMENT STATION

1600 EAST 1ST SOUTH STREET
SALT LAKE CITY, UTAH

February 16, 1959

Memorandum

To: J. W. Townsend, Executive Officer, OME Field Team, Region III

From: M. H. Howes

Subject: Docket No. DMEA-4981 (Lead-zinc-copper), Contract Idm-E1218, New Park Mining Co. (Mayflower mine), Wasatch County, Utah. Operator's additional requests for contract changes

The original and eight copies of a letter from the operator, dated February 12, 1959, containing requests for contract changes in addition to the requests of December 23, 1958, have been received and are transmitted herewith.

In his original application the operator included an Exhibit of equipment to be purchased for the project, as well as a depreciated value of other equipment installed in the Mayflower mine that must necessarily be used on the project. Included are the present hoisting and pumping facilities, tunnel-level haulage, electrical-distribution system, compressed-air equipment, ventilation system, and surface facilities. This other equipment, not allowed in Category (4) of the contract, is listed on the attached Exhibit and shows a conservative depreciated total present value of $138,010. It is estimated that the amount of waste tonnage produced by the exploratory project will be approximately equal to one-third of the total amount of ore and waste tonnage produced by the Mayflower mine during the project. Depreciation on equipment valued at $138,010 over a period of 60 months is $2,300 per month, and one-third of this amount is $765 per month that should be charged to the project. The operator requests that $765 be added to the monthly maximum of $1,963 allowable depreciation per month requested in his previous letter. The increased rate of $765 for 24 months would amount to a total of $18,400.

The operator requests that in the contract under Item 3 - Drifting and Crosscutting, the clause "drifts and crosscuts shall be timbered as necessary using standard drift sets," be reworded to permit "ground support as necessary, using standard drift sets or rock bolts and headplates." The use of 8 bolts with 4-foot headpieces per 5 feet of ground to be supported (the equivalent of one drift set) is estimated to cost $40. The operator requests that the contract be amended for use of rock bolts at $5 per bolt.

The original application proposed 15 drill stations, each 20 feet long, equivalent to 300 feet of drifting, which, at $45 per foot, amounts to $13,500. Since this cost is not allowed in the contract, the operator requests an amendment to provide an additional $13,500 for the drill stations.

The above requests are all thought to be fair and reasonable, and recommendation is hereby made for their approval.

M. H. Howes

M. H. Howes

Enclosure
cc: J. B. Clemmer

OFFICIAL FILE COPY
O. M. E.
RECEIVED FEB 24 1959
DATE INITIALS CODE

NEW PARK MINING COMPANY

KEETLEY, UTAH

SALT LAKE CITY OFFICE
904 WALKER BANK BUILDING

February 12, 1959

OME
DEPARTMENT OF THE INTERIOR
FEB 18 1959
REGION III
DENVER, COLORADO

Mr. J. W. Townsend, Executive Officer
O. M. E., Field Team Region III
224 New Customhouse
Denver 2, Colorado

Re: Docket No. DMEA 4981
Contract No. Idm - E1218

Dear Mr. Townsend:

Since writing you on December 23, 1958, we have given further study to the above referenced contract, and we will present here some additional data for your consideration.

In our original presentation to the DMEA, New Park included the Exhibit of equipment to be purchased for the project. We also indicated a depreciated value of other equipment in the Mayflower Mine that must necessarily be used to operate the project. This includes the present hoisting and pumping facilities, tunnel level haulage, electrical distribution system, compressed air equipment, ventilation system and surface facilities. We note that Category (4) does not consider any of this original investment listed at an extremely conservative depreciated basis of $138,010.00, as indicated on the attached Exhibit. A conservative estimate of progress for the project indicates waste tonnage produced will approximate 1/3 of the total ore and waste to be produced from the Mayflower Mine during the project. The above indicated investment amortized over 60 months equals $2,300.00 per month, and 1/3 of this amount is $765.00 per month that should be charged to the project. We believe this should be added to the monthly maximum of $1,963.00 allowable depreciation per month requested in our previous letter and the maximum allowable total contract depreciation be increased at the rate of $765.00 for 24 months or a total of $18,400.00.

Under Item 3 - Drifting and Crosscutting - the contract specifies "drifts and crosscuts shall be timbered as necessary using standard drift sets". From a practical standpoint, we believe this should be reworded to permit "ground support as necessary using standard drift sets or rock bolts and head plates". We plan on using 8 bolts with 4 foot head pieces per 5 feet of ground to be supported (the equivalent of one set). Costs

are estimated as follows:

8 rock bolts @ $1.25	$ 10.00
8 head plates @ $2.50	20.00
Labor @ $2.00 per foot @ 5 feet.	10.00
Total cost 8 installed bolts	$ 40.00

We, therefore, request that the contract be amended for the use of rock bolts at $5.00 per bolt.

Under Item 7 - Diamond Drilling - the original application included provisions for 15 drill stations at 20 feet each or 300 feet of drifting to accomodate the drill equipment. Based on the contract maximum of $45.00 per foot of drifting, this amounts to $13,500.00. No provision was made in our contract for this expenditure and we are requesting an amendment to provide these funds.

Your consideration of these requests will be appreciated.

Very truly yours,

NEW PARK MINING COMPANY

CLARK L. WILSON,
Vice President

CLW:ih

NEW PARK MINING COMPANY

INTER DEPARTMENT CORRESPONDENCE

OFFICIAL FILE COPY
O. M. E.
RECEIVED FEB 24 1950

DATE	INITIALS	CODE

TO: C. L. Wilson

FROM: C. D. Harper

SUBJECT: Machinery & Equipment

New Park Mining Company Machinery and Equipment Applicable to DMEA-Projected Net Book

	Cost	Value
Transformers 100 KVA (3)		600
1/o Electric Cable 3,200'		1,200
Transformer Rack & Cable		1,700
Transformers 500 KVA (3)		2,500
SB42 Aerodyne Fan		600
Compressors (3) & Equipment		15,600
Bucking Room Equipment		970
Assay Office Equipment		230
Blacksmith Shop Equipment		720
Warehouse Shop Equipment		4,400
Heating Plant		1,800
Battery Charging Equipment		410
Carpenter Shop Equipment		4,470
Change Room Equipment		2,200
Ore Loading Equipment		2,600
Engineering Equipment		250
Office Equipment (Mayflower Office)		1,800
Electric Cap Lamps (80)		560
Cap Lamp Charging Equipment		250.
Fire Hose & Other Equipment		200
Transformers 100 KVA (3)		600
Transformers 50 KVA (3)		300
Transformers, small (10)		400
Track		6,000
Pipe		5,900
Power Lines		3,600
Pumps (14)		2,500
Hoist, Mayflower 800 Level		2,600
Transformers, 800 Level		600
Battery Locomotives (5)		3,000
Battery Charging Equipment (Undg.)		1,000
Level Ore & Waste Cars		5,400
Man Cars (9)		270
Mine Bicycles (5)		200
Skips (3)		1,450
Cages (3)		1,450
Transformers 100 KVA (3)		600
Misc. Electrical Equipment		850
Fans & Blowers (18)		1,800
Oxygen Apparatus		400
Concrete Mixer		200
Misc. Tools		400
Transformers 1500 KVA (1) 300 KVA (1)		2,200
Clark Yardlift		1,100
Snow Thrower		300

NEW PARK MINING COMPANY

TO: C. L. Wilson

FROM: C. D. Harper

SUBJECT: Machinery & Equipment Continued

	Cost	Net Book Value
Nordberg Hoist		17,500
Crossheads (3) Safety Dogs (12)		1,400
Circuit Breakers (2)		1,300
6-Ton Diesel Locomotives (2)		6,600
G.T. - I.R. Pumps (3)		2,200
Electric Control Equipment		1,800
20 Cell MVM 19 Plate Battery (11)		3,200
Card(Mine Cars (20)		8,500
Track, 50# rail		1,250
Air Line, 6" pipe		800
Vent Pipe, 16"		400
G.D. Auto Drifter Drill Complete		600
Fly GT Pump w/3B Impeller 3/60/440V		480
I.R. Cut-off Saw		100
Caterpillar D-7 Tractor		5,700
Totals	$829,587.05	$138,010

Cost represents the purchase price of the machinery & equipment.

Net Book Value represents the value of the machinery & equipment after depreciation.

OFFICIAL FILE COPY O. M. E. RECEIVED FEB 18 1959		
DATE	INITIALS	CODE
2-18	C	220
2/18	[illegible]	800
2-16	[illegible]	500

224 New Customhouse
Denver 2, Colorado
February 16, 1959

Mr. Clark L. Wilson, Vice President
New Park Mining Company
9th Walker Bank Building
Salt Lake City 11, Utah

Re: Docket No. [illegible]
Zinc-Copper)
Contract Ide[illegible]
New Park Mining Company
(Mayflower mine)
Wasatch County, Utah

Dear Mr. Wilson:

Enclosed are the Government's, Audit, Finance Office and Field Team copies of proposed Amendment No. 1 to the subject contract, which has been prepared to provide for some of the changes requested by your letter of December 23, 1958.

Under item 2 of the proposed amendment, the 30 month limitation for depreciation of equipment under Category 4 (c) has been removed, and the list of equipment has been revised in accordance with the schedule attached to your letter of December 23, 1958. In addition, monthly depreciation rates have been established for the individual items of equipment, to facilitate reporting.

The maximum allowable rate of $1590.00 per month for depreciation as established in the contract, is a firm commitment which cannot be exceeded; therefore, your request for increase of the monthly depreciation rate from $1590.00 to $1963.00, is denied.

We wish to point out that depreciation is allowable only on those items of equipment which are used any specific month, the aggregate cost of which does not exceed $1590.00 per month. In conjunction with the matter, and regardless that other documentation has been waived, an itemized list of equipment used that month must be submitted with your accounting report and voucher each month depreciation is reported and reimbursement claimed.

If the proposed amendment is satisfactory, all copies are to be signed by an official of your company authorized to sign such an

USO 30 Rev 10
Page 3
Date 11/1/2000
Author: [redacted]
Approved by: [redacted]
Date: [redacted]
Revision Date: [redacted]
Revision Number: [redacted]
Revision Author: [redacted]
Revision Approved by: [redacted]
Revision Date: [redacted]

instrument, the signer's title inserted, the corporate seal affixed, and all copies promptly returned to this office; upon receipt of which, the "Operator's copy" will be forwarded to you.

If the proposed amendment is not satisfactory, please promptly return all copies to this office, unsigned, together with your objections thereto.

Very truly yours,

Original signed by
J. W. TOWNSEND

J. W. Townsend
Executive Officer, OME
Field Team, Region III

Enclosures

JDC:hmh

cc: Chmn. Op. Comm. (2)
Harshman
Howes, OME/SLC
Corres. file, Reg. III
Cooper
Chron

MME Form 7
(10-58)

OFFICIAL FILE COPY

Date	Surname	Code
2/5	Griswold	500
2-5	Chambers	500
2/13	Martin	130
"	Johnson	110
		~~100~~
		~~110~~
2/16	C	220
		500

500

FEB 13 1959

Mr. J. W. Townsend, Executive Officer
OME Field Team, Region III
224 New Customhouse Bldg.
Denver 2, Colorado

Re: Docket No. DMEA-4981 (~~Lead-Zinc-Copper~~)
New Park Mining Company
Mayflower Mine
Wasatch County, Utah
Contract No. Idm-E1218

Dear Mr. Townsend:

This is in reference to your memorandum of January 21, 1959, with enclosures. We are enclosing a proposed Amendment No. 1 to the contract which covers some of the changes requested by the Operator. We have made a new listing of equipment in conformance with the Operator's request, showing allowable monthly rates for each item. We have also removed the limitation of 30 months; this covers Items 1 and 3 outlined on page two of your letter. As to your Item 2, you should advise the Operator directly on this, explaining that depreciation is only allowed on items which were actually used in any specific month and that a proper itemized list must be provided each month in question.

We cannot increase the allowed monthly depreciation total from $1,590.00 to $1,963.00, as requested.

The original and four copies of the proposed amendment are enclosed which have been signed by the Acting Director, for the Government. If it meets with your approval, kindly present it to the Operator for approval and signature and, when completed, distribute the copies in the usual manner. Otherwise, and if any proposed change should lie beyond your delegated authority, return all copies to us with your recommendations. Also we are enclosing two extra copies for the use of the Field Team.

Sincerely yours,

W. S. Martin
ACTING Chairman, Operating Committee

WRGriswold/er 2/5/59
Copy to: Docket
Dir Read File
Op. Committee
Mr. Bishop, USBM
Mr. Kiilsgaard, USGS
Chron.

Enclosures
APPROVED:

H. G. Iverson
Member, Bureau of Mines

N. E. Nelson
Member, Geological Survey

43683

Government's copy

EXPLORATION PROJECT CONTRACT
NEW PARK MINING COMPANY
DOCKET NO. DMEA-1635

AMENDMENT NO. 1

It is agreed this _____ day of _____, 1959, between the United States of America, acting through the Department of the Interior, Office of Minerals Exploration, hereinafter called the "Government," and New Park Mining Company, hereinafter called the "Operator," that Exploration Project Contract No. Idm-E1218 (Docket No. DMEA-4981), dated June 23, 1958, hereinafter called the "Contract," is amended, as follows:

1. In Exhibit "A" under the heading, Description of the Work, item No. 2 is revised to read as follows:

"2. Pumps and pump column installation.

Install a twelve inch steel water column from the new 2005 level to the ~~800 (drainage tunnel)~~ 1630 level; install two 350 HP pumps on the 1630 level; and install two 450 HP submersible pumps on the 2005 level."

From the 1630 level to the 800 (drainage tunnel) level install a twelve inch steel water column;

2. In Exhibit "A" under the heading, Estimated Costs of the Project, Category (4) Operating Equipment is revised to read as follows:

"Category (4) Operating Equipment

(a) and (b) Rental and purchases		None
(c) Depreciation		Per Month
Pumping	Value	
Power cable, 1,310 feet, 5,000 v. armored cable, @ $4.25/ft.	$ 4,050.00	$ 67.50
2 4-GT, IR 350 HP pumps, 9-1/2- inch impeller, switches and controls	17,500.00	291.67
2 BJ, 16-inch 2CXH 5 stage, 450 HP submersible pumps with controls	27,300.00	455.00

MME Form 7
(10-58)

OFFICIAL FILE COPY

Date	Surname	Code

500

February 6, 1959

Memorandum

To: Associate Solicitor, Division of Minerals Resource

From: Chief, Division of Base Metals

Subject: Rewrite of Proposed Amendment No. 1 for Docket No. LMEA-4981, New Park Mining Company, Mayflower Mine, Wasatch County, Utah, Contract No. Idm-E1216, Lead-Zinc-Copper.

Due to an error on the part of the undersigned, the "Pumps and pump column installation" should be re-written as follws:

"2. Pumps and pump column installation

Install a twelve inch steel water column from the new 2005 level to the 1630 level. From the 1630 level to the 800 (drainage tunnel) level install a ten inch steel water column; install two 350 HP pumps on the 1630 level; and install two 450 HP submersible pumps on the 2005 level."

W. R. Griswold

W. R. Griswold

WRG/er
CC: Docket
Dir Read File
Chron

43683

DMEA Form 7
(12-56)

OFFICIAL FILE COPY

Date	Surname	Code

February 5, 1959

Memorandum for the Docket

From: Chief, Division of Base Metals

Subject: Justification for Amendment No. 1 for Docket No. DMEA-4981, New Park Mining Company, Mayflower Mine, Wasatch County, Utah, Contract No. Idm-E1218, Lead-Zinc-Copper.

Under date of December 23, 1958, the Operator has requested certain contract changes dealing with changes in equipment purchases. We can see no objection to the larger size pumps or the larger size water column, if considered advisable. However, we cannot properly accede to the Operator's request that the total monthly depreciation allowance be increased from $1,590.00 to $1,963.00. We can lift the limitation of 30 months and we can readjust the individual items in the depreciation listing. This has been done in Amendment No. 1.

W R Griswold
W. R. Griswold

WRG/er
CC: Docket
Dir Read File
Chron.

8623

MME Form 7
(10-58)

OFFICIAL FILE COPY

Date	Surname	Code

500

January 27, 1959

Memorandum

To: Associate Solicitor, Division of Minerals Resources

From: Chief, Division of Base Metals

Subject: Preparation of Amendment No. 1 for Docket No. DMEA-4981, New Park Mining Company, Mayflower Mine, Contract No. Idm-E1218, Lead-Zinc Copper.

Will you kindly prepare an Amendment No. 1 to the cited contract which will:

Delete item 2 on the first page of Exhibit "A" of the contract and substitute the following:

"2. Pumps and pump column installation

Install twelve inch steel water column from the new 2005 level to the 800 (drainage tunnel) level; install two 350 HP pumps on the 1630 level; and install two 450 HP submersible pumps on the 2005 level."

Delete the entire Category (4) Operating Equipment as delineated in Exhibit "A" of the contract and substitute the following:

43683

Category (4) Operating Equipment

(a) and (b) Rental and purchases — None

(c) Depreciation — Per Month

Pumping	Value	Per Month
Power cable, 1,310 feet, 5,000 v. armored cable, @ $4.25/ft.	$ 4,050.00	$ 67.50
2 4-GT, IR 350 H.P. pumps, 9-1/2- inch impeller, switches and controls	17,500.00	291.67
2 BJ, 16-inch 20XH 5 stage, 450 H.P. submersible pumps with controls	27,300.00	455.00
Drifting and Crosscutting		
1 Gantry-type Jumbo complete with 6 drills	15,000.00	250.00
1 - 630 Eimco loader	10,100.00	168.33
1 - 5 car "train car loader"	19,000.00	316.67
1 charging panel	740.00	12.33
2 4-ton, 50-cell motor batteries	6,500.00	108.33
6,000 feet of #1-0 600 v. power cable	7,500.00	125.00
1 set 100 KVA transformer (used) 2300-440 volts	1,800.00	30.00
5-25 H.P. fans (or equivalent)	3,500.00	58.33

Drilling, Long Hole

2 long-hole machines complete	$4,800.00	$80.00

(NOTE) The total depreciation allowance for any one month may not exceed $1,590.00 nor the total depreciation allowance for the duration of the contract may not exceed $47,700.00.

W. R. Griswold

W. R. Griswold

WRG/er
CC; Docket
Dir Read File
Chron.

OFFICIAL FILE COPY
O. M. E.
RECEIVED JAN 26 1959

DATE	INITIALS	CODE
1/26	C	220
1/26	[illegible]	800
1/27	[illegible]	500

224 New Customhouse
Denver 2, Colorado

January 22, 1959

Mr. Clark L. Wilson
Vice President
New Park Mining Company
Keetley, Utah

Re: Docket No. DMEA 4981 (Lead-Zinc-Copper)
Contract No. Idm-21218
New Park Mining Company
(Mayflower mine)
Wasatch County, Utah

Dear Mr. Wilson:

Receipt is acknowledged of your letter of December 23, 1958, wherein you request an amendment to the contract to permit an increase in the size of the pump column, and an increase in the monthly rate of depreciation for the equipment listed under Category (4)(c) of Exhibit "A" attached to the contract.

Preparation of an amendment of the nature involved, is not within the authority delegated to this office; therefore, the matter has been forwarded to the Washington office, OME, for their consideration.

When we are informed of Washington action in the matter you will be advised.

Very truly yours,

J. W. Townsend
Executive Officer, OME
Field Team, Region III

JWT:ltm

cc: Chmn. Op. Comm. (2)
Harshman
Howes, OME/SLC
Corres. file
Cooper
Chron.

OFFICIAL FILE COPY
O. M. E.
RECEIVED JAN 28 1953

DATE	INITIALS	CODE

UNITED STATES
DEPARTMENT OF THE INTERIOR
OFFICE OF MINERALS EXPLORATION
224 New Customhouse
Denver 2, Colorado
January 21, 1959

OFFICIAL FILE COPY
O. M. E.
RECEIVED JAN 26 1959

DATE	INITIALS	CODE
1/26	C	220
1/26		130
		500

Chairman, Operating Committee, OME

Executive Officer, OME Field Team, Region III

t: Docket No. DMEA 4981 (Lead-Zinc-Copper) Contract Idm-E1218
New Park Mining Company (Mayflower mine) Wasatch County, Utah

Enclosed are the original and two sets of data consisting of the Operator's letter of December 23, 1958, with attached data, and a memorandum dated January 14, 1959, from M. F. Howes, Mining Engineer, Bureau of Mines, pertaining to a change in some components of the estimated costs of the project.

The Operator requests an amendment to the contract to provide for the purchase and installation of a 12 inch pump column in lieu of the 10 inch column provided for in the contract, and to increase the monthly rate and period for equipment depreciation because of the purchase of equipment of larger size than was originally estimated as being needed and/or more expensive than originally estimated.

The examining engineer recommends that the amendment be prepared as requested by the Operator; however, this office concurs in that recommendation with reservations.

The need for larger pumps is based on pure assumption and appears to be more in the way of preparing for future operations beyond the life of the contract; therefore, the extent of benefits to the Government by the increase of pump size is doubtful.

In regard to the 12 inch pump column, it is recommended that Item 2 of Exhibit "A" be amended to provide for the 12 inch pump column which was purchased by the Operator, because the contract does not limit the cost, only the size of the column.

In regard to the requested increase in the monthly depreciation rate, and increase of the depreciation period, without increase of the total estimated cost of depreciation as presently established in the contract, it appears that clarification of the depreciation issue is desirable.

The use of a larger jumbo, Eimco loader, and car loading arrangement, will tend to expedite operations; and could result in tangible benefits to the Government by reduction in the cost of the work; therefore an increase in the estimated costs of those items appears warranted.

Since some items of equipment will cost less than originally estimated, it appears that a new schedule for equipment depreciation will be necessary as outlined in the Operator's request. In addition, since the total estimated cost of depreciation will not be changed, it is recommended that a clarifying paragraph be added to the revised schedule which will provide:

1. Monthly depreciation rates on individual items of equipment on the basis 1/60th of the value established in the revised schedule. This is necessary in order to provide a basis for the Government contribution to the costs of depreciation of only that equipment which is actually in use during a current month.

2. Provide that Government contribution to be based on an itemized list which will be furnished by the Operator with each monthly report showing the individual items of equipment that were actually used a portion or all of that current month. Documentation of costs has been waived for this contract; therefore, the itemized list must be provided by the Operator each month regardless of the lack of other documentation.

3. Modify the depreciation period by including recitation to the effect that depreciation is allowable for a less or greater period of time than 30 months on individual items of equipment, as governed by their needs, provided that the total estimated cost of $47,700 is not exceeded.

It is believed that the above will provide the flexibility desired for operations within the presently established life of the contract, also will provide flexibility in the event it becomes desirable to extend the life of the contract in order to complete the work outlined. Without the clarifying material under items 1, 2, and 3, it is believed that the Operator interprets the depreciation allowance to be $1590 a month for 30 months, regardless of the items of equipment actually used with no requirement to provide documentation by which we can varify that claim is being made currently for only such items of equipment that are actually being used.

In addition to the foregoing, please refer to the first paragraph of your letter of September 2, 1958, regarding a correction in paragraph reference of Article 13.

When the matter has been reviewed, please teletype advice as to your decision so that the Operator can be advised accordingly.

J. W. Townsend

Enclosures

UNITED STATES
DEPARTMENT OF THE INTERIOR
BUREAU OF MINES
REGION III

INTERMOUNTAIN
EXPERIMENT STATION

1600 EAST 1ST SOUTH STREET
SALT LAKE CITY, UTAH

OFFICIAL FILE COPY
O. M. E.
RECEIVED JAN 26 1959

DATE	INITIALS	CODE

January 14, 1959

Memorandum

To: J. W. Townsend, Executive Officer, OME Field Team, Region III

From: M. H. Howes

Subject: Docket No. DMEA-4981 (Lead-zinc-copper), Contract Idm-E1218, New Park Mining Co. (Mayflower mine), Wasatch County, Utah. Operator's request for certain contract changes

The operator states that a reappraisal of the water problem encountered by the subject project indicates that additional waterflows over normal can be expected, due to the depth and horizontal extent of the contract workings, together with changes in geology that could easily provide new water reservoirs. The normal waterflow at present is approximately 1,000 g.p.m. Installation of equipment designed to handle 1,000 g.p.m. was suggested in the application for Government aid in the project, and this equipment is described in the contract. Since the reappraisal of the problem indicates waterflow above normal, the operator has purchased pumping equipment capable of handling 2,500 g.p.m. This equipment includes 12-inch-diameter steel water column from the 2005 level to the 1630 level.

In addition to the increased size and cost of pumping equipment purchased, other equipment purchased and belonging to Category (4) in the contract varies in cost from the estimates included in the contract. In general, these actual costs are higher, but in a few instances are lower.

The operator requests that the 12-inch-diameter pump column be allowed to replace the 10-inch-diameter pump column from the 2005 level to the 1630 level. He also requests that the equipment listed in the exhibit attached to his letter be allowed in lieu of the equipment listed under Exhibit "A", Category (4) in the contract, and that the maximum monthly allowable rate of depreciation be increased from the present $1,590 to $1,963, and also that the depreciation period not be limited to 30 months, but be extended through the life of the contract with the understanding that the approved depreciation expense total of $47,700 will not be exceeded.

It is recommended that in Exhibit "A", Description of the Work, Item No. 2, Pumps and pump column installation in the contract, the words "Install ten-inch steel water column from the 2005 level to the 800 (drainage tunnel) level," be changed to read "Install twelve-inch steel water column from the 2005 level to the 1630 level and ten-inch steel water column from the 1630 level to the 800 (drainage tunnel) level."

It is also recommended that Exhibit "A", Estimated Costs of the Project, Category (4), Operating Equipment (c) Depreciation, 60-month period, in the contract be changed to conform with the exhibit attached to the operator's letter. The larger and more costly items of equipment were purchased to expedite the project. Since the approved depreciation expense total of $47,700 will not be exceeded, the operator's request appears to be reasonable.

M. H. Howes

M. H. Howes

Enclosure

cc: J. B. Clemmer

NEW PARK MINING COMPANY

KEETLEY, UTAH

SALT LAKE CITY OFFICE
904 WALKER BANK BUILDING

December 23, 1958

OFFICIAL FILE COPY
O. M. E.
RECEIVED JAN 26 1959

DATE	INITIALS	CODE

Mr. J. W. Townsend, Executive Officer
DMEA Field Team - Region III
224 New Customhouse
Denver 2, Colorado

Re: Docket No. DMEA 4981
Contract No. Idm - E 1218

Dear Mr. Townsend:

At the time of submission of our application for the above referenced contract, we included pump equipment to relay the water flow from the 2005 level to the 1630 level sump. From this point, the water is pumped to the 800 level for gravity flow through the Mayflower Tunnel to the adit.

We indicated the need for two Byron Jackson - 12 inch - 2CKXH - 9 stage - 175 h.p. submersible pumps at $8,121.00 each, plus switches and controls at $3,120.00 each, totalling $22,480.00. This figure is included in the contract under Category (4), Operating Equipment.

This equipment was selected to deliver 1,000 g.p.m. against a head of 500 feet. The mine water flow is approximately 1,000 g.p.m. at the present time and it was planned to have one pump operating with the other as a stand-by in case of trouble. Further evaluation of the water problem indicated that it is logical to expect additional water flows over normal, due to the depth and horizontal extent of the contract workings together with changes in geology that could easily provide new water reservoirs.

The pump supplier furnished new bids indicating a 450 h.p. pump available to handle 2,500 g.p.m. at 500 feet with sufficient horsepower available to operate a larger pump for additional capacity, if needed. The quote for this equipment is as follows: 2 Byron Jackson

16 inch - 2CXH - 5 stage, submersible pumps with starting equipment at $13,650.00, totalling $27,300.00. These pumps have been purchased for the project.

In similar fashion the prices for other capital equipment vary from the estimates included in the contract. In general these are higher, but in a case or two may be lower. I am attaching as an exhibit, a list of operating equipment, Category (4) in the Contract, indicating original price estimates and new estimates based on equipment ordered and purchased. You will note that the original capital investment has increased approximately $23,000.00, to $117,790.00. To expedite the project we have invested in a "train car loader", larger mucking machine, and Gantry-type Jumbo that will permit faster advance in the drift headings. Based on the new total capital investment for equipment, with depreciation over a five year period, the maximum monthly depreciation rate would increase to $1,963.00. Some of this equipment will be used during each month of the project. We, therefore, request that the maximum monthly allowable rate be increased from the present $1,590.00, to $1,963.00, and that the depreciation period not be limited to 30 months but extended through the life of the contract with the understanding that we do not exceed the approved depreciation expense total of $47,700.00.

In line with the increased pump capacity, we have changed the pump column from the 2005 level to the 1630 level to 12 inch diameter compared with the original plan of 10 inch diameter. We assume that DMEA will allow one quarter of this cost under Category (3) Operating Materials and Supplies. This is according to the statement on page 3 of Exhibit "A" that "The Government will contribute to the actual costs scheduled below, that do not exceed the maximum unit costs computed as set forth in Paragraph (c) of Article 13 (Annex II)".

Your approval of this procedure will be appreciated.

Very truly yours,

NEW PARK MINING COMPANY

CLARK L. WILSON,
Vice President

CLW:ih

Category (4) Operating Equipment

(c) Depreciation, 60 month life

Pumping	Value	Current Estimated Value	Description
Power cable, 1,310 ft., 5,000 v. armored cable, @ $4.25/ft.	$ 5,567.50	$ 4,050.00	Same
2 4-GT, IR 350 H.P. pumps @ $7,777.62 each, 9-1/2-inch impeller	15,555.24	17,500.00	Same
2 BJ, 12-inch 2CKH 9 stage, 175 H.P. submersible pumps @ $8,121.00/each	16,240.00		2 BJ, 16 inch 2CXH, 5 stage 450 H.P. submersible pumps with controls.
Switches, controls, and mountings for pumps @ $3,120.00/each	6,240.00	27,300.00	
	$ 43,604.74	$ 48,850.00	

Drifting and Crosscutting	Value	Current Estimated Value	Description
1 Jumbo G.D. rail model J-2P	$ 6,465.00		
2 G.D. Cf - 93 P, drifting drills, complete	3,840.00	$ 15,000.00	1 Gantry-type Jumbo complete with 6 drills.
1 G.D. Cf - 93 P, drifting drill, bare	1,465.00		
1 21 - C Eimco loader	4,720.00	10,100.00	1-630 Eimco loader
1 Canton car transfer	1,200.00		
10 50-cubic-foot mine cars @$920.00 each	9,200.00	19,000.00	1 - 5 car "train car loader"
1 charging panel	740.00	740.00	Same
2 4-ton, 50-cell motor batteries	6,500.00	6,500.00	Same

Drifting and Crosscutting, cont.	Value	Current Estimated Value	Description
Power cable, ventilation #2 rubber, 3 conductor, @ $.78/ft.	$ 6,240.00)		
Power cable, blasting and blowing #4, 3 conductor @ $0.39/ft.	3,315.00)	$ 7,500.00	6,000 ft. of #1-0 600 volt power cable
1 set 100 KVA transformer (used) 2300-440 volts	2,400.00	1,800.00	Actual purchase price.
5-25 H.P. fans @$560.00 each	2,800.00	3,500.00	As described or equivalent
	$48,885.00	$ 64,140.00	

Drilling, Long Hole	Value	Current Estimated Value	Description
2 long-hole machines, complete	$ 2,930.00	$ 4,800.00	New quotation
Total machinery	$95,419.74	$ 117,790.00	

$1590.00* monthly, 30 months $ 47,700.00*

OFFICIAL FILE COPY
DMEA
RECEIVED SEP 1958
DATE | INITIALS | FILE
9-19 | C | 220
9/24 | copy | 500

224 New Customhouse
Denver 2, Colorado
September 16, 1958

Memorandum

To: T. K. Redding, DMEA Auditor

From: Alternate Acting Executive Officer, DMEA Field Team, Region III

Subject: Docket No. DMEA 4981 (Lead-Zinc-Copper), Contract No. 14m-K1918, New Park Mining Company (Mayflower mine), Wasatch County, Utah

Reference is made to the letter from the Chairman, Operating Committee, DMEA, dated September 8, 1958, a copy of which was provided for your records.

The Operator has submitted accounting reports for the months of July and August, 1958. Therefore, it is requested that an on-site interim audit of reported costs be made at an early date, so that any questions regarding allowability of costs and maintenance of necessary cost accounting records can be resolved before the work has progressed to any great extent.

Please advise the date you will schedule the audit.

Original signed by
J. W. TOWNSEND

J. W. Townsend

JWT:prl

cc: Chmn. Op. Comm. (2)
Harshman (2)
Howes, DMEA/SLC
Curran. file
Cooper
Chron.

[illegible]

1224 New Customhouse
Denver 2, Colorado
September 16, 1958

9/29 9/24 cll. 220 ~~300~~

Mr. Clark L. Wilson
New Park Mining Company
Bentley, Utah

Re: Docket No. DMEA 4981 (Lead-Zinc-Copper)
Contract No. Idm-31218
New Park Mining Company
(Mayflower mine)
Wasatch County, Utah

Dear Mr. Wilson:

We note in your MF-104 reports for the months of July and August, 1958, that you have claimed $250.00 monthly for accounting, which is the maximum allowable cost of accounting as detailed under Category (7) of Exhibit "A".

Since documentation of reported costs has been waived, your attention is specifically directed to the fact that all costs in which the Government will participate must be reasonable and the direct and necessary cost of performing the work, and that all such costs must be substantiated by your records when audits are made by representatives of the Defense Minerals Exploration Administration.

JWT:prl

Very truly yours,

Original signed by
J. W. TOWNSEND

J. W. Townsend
Alternate Acting Executive Officer
DMEA Field Team, Region III

cc: Chan. Sp. Comm. (2)
Harshman (2)
Howes, DMEA/SLC
Amendment file, Reg. III
DMEA Auditor, Reg. III
Corres. file
Cooper
Chron.

DMEA Form 7
(12-56)

OFFICIAL FILE COPY

Date	Surname	Code
8/29	Fisher	800
8-29	Chambers	800
	Hummel	500
9/2	Selbrede	130
"	Johnson	110
"	Rutledge	100
9/3	C	220
		500

Mr. J. W. Townsend
Alternate Acting Executive Officer
DMEA Field Team, Region III
224 New Customhouse
Denver 2, Colorado

SEP 2 1958

Re: Docket No. DMEA-4891
(Lead-Zinc-Copper)
New Park Mining Company
Contract No. Idm-E1218

Dear Mr. Townsend:

The assumption in your memorandum dated August 21, 1958, that the reference of paragraph (g) of Article 13 was intended to be paragraph (c) is correct. A letter to the Operator calling attention to this typographical error should be sufficient for the time being. If any amendment to the contract is made for any purpose, this matter may be formally corrected at that time.

The items of work set forth in Exhibit "A" of the contract are purely descriptive of the nature of the work contemplated to be performed under the contract. The order in which the items are stated is not related to the order in which the work is to be performed. Of course, any important deviations in the work performed from that contemplated by these work items must be authorized by appropriate amendment to the contract.

The costs set forth under the caption "Estimated Costs of the Project" are governing for the purpose of reimbursement by the Government. Periods, quantities, and amounts stated as maximums are not to be exceeded. The only limitations placed on the other items of cost are set forth in Article 6 (a), that is, "those that are direct, reasonable, necessary, and that are estimated in Exhibit "A" by categories."

While it is possible that the total costs of the exploration project may exceed the amount stated in the contract as the maximum amount in which the Government will participate, it is not at all certain that this will happen. The entire amount of any excess costs incurred must be

assumed by the Operator. There is no justification for setting limits to the allowable costs under a specific work item other than that they be direct, reasonable, and necessary.

If, as you state, the transite pipe is being placed on a labor contract unit foot basis the rate of $2.00 per foot is allowable as labor cost if it is deemed to be fair and reasonable and represents costs actually incurred. The charge for fringe benefits should be the amount of actual costs incurred and may be more or less than the 11.5 percent used for estimating costs under Category (7).

The amount set up for supervision and technical services under Category (2) should not be construed as an arbitrary allowance of $650.00 per month for such services. Instead, that amount is the maximum allowable during any month. Actual costs, substantiated by the Operator's records and subject to audit by DMEA, may be claimed for reimbursement but not in excess of $650.00 in any month. The time during which the Government will contribute to actual supervision and technical service costs is limited to 40 months.

Presumably the accounting in connection with this project is to be performed by the Operator's employees in connection with their other duties. The estimate of 40 months at $250.00 monthly, total $10,000.00, is not a contract maximum. Neither is it intended that $250.00 shall be an arbitrary charge for accounting services. The charge for accounting should be substantiated in the Operator's records, subject to audit and the fair and reasonableness test.

The item of labor under Category (2)(c) is an estimate and not a contract maximum. The amount of $191,230.00 may be exceeded if that should become necessary. Of course, any excess expenditures for labor must be made up from savings under the other categories, or assumed by the Operator, so that the estimated total cost of the project in which the Government will participate is not exceeded.

While it was proper to waive documentation of costs in this case and your letter to the Operator dated June 30, 1958, does call attention to the provisions of Article 6 of the contract, it is believed that the Operator's attention should be especially directed to the fact that all of the costs in which the Government will participate must be actual costs capable of substantiation from his records when audits are made by representatives of DMEA. It is further believed that an interim

cost audit should be performed during the early stages of the work so that any questions regarding allowable costs may be resolved and the possibility of substantial disallowances at the time of the final audit may be minimized.

Sincerely yours,

George C. Selfridge

Chairman, Operating Committee (GHB)

APPROVED:

/s/ F. J. Cerenzyak (GHB)
Member, Bureau of Mines

Thor H. Kiilsgaard (GHB)
Member, Geological Survey

CEFisher/GMcC
August 29, 1958
cc: Docket
Admr. Reading File
Operating Committee
Mr. Chambers
THKiilsgaard
OMBishop

Cy sent to 800

FILE COPY
DMEA
RECEIVED AUG 25 1958

DATE	INITIAL	CODE
8/26	C	220
"	Dis	500

UNITED STATES
DEPARTMENT OF THE INTERIOR
DEFENSE MINERALS EXPLORATION ADMINISTRATION
224 New Customhouse
Denver 2, Colorado
August 21, 1958

Memorandum

To: Chairman, Operating Committee, DMEA

From: Alternate Acting Executive Officer, DMEA Field Team, Region III

Subject: Docket No. DMEA 4981 (Lead-Zinc-Copper), Contract No. Idm-E1218, New Park Mining Company (Mayflower mine), Wasatch County, Utah

Enclosed are two copies of the Operator's narrative report and Forms MF-104 and MF-104A, submitted to cover work performed during the month of July, 1958.

In starting to process the Operator's accounting report, a review of the contract brings to attention certain deficiencies and ambiguities which leave us in doubt as to how to proceed, and which may lead to a misunderstanding by the Operator of accounting requirements. The matter has been discussed with the Region III DMEA Auditors and it is their recommendation that clarification be obtained from your office.

The matters in question are:

1. On page 3 of Exhibit "A", caption "Estimated Costs of the Project," reference is made to paragraph (g) of Article 13 (Annex II). Since there is no paragraph (g) in Annex II, it is assumed that the reference was intended for paragraph (c).

2. In review of the enclosed Operator's accounting report for July, 1958, you will note that the work under Item 1 of the contract is being performed on a labor contract unit foot basis, which is questioned as being permissible under the present contract provisions.

3. We cannot reconcile the allowable maximum cost as set forth in the contract for work under Items 3, 4, 6, and 7, as against the total estimated cost of the project in order to determine the extent of costs that are allowable for work under Items 1, 2, and 5.

   There follows a tabulation of maximum allowable costs based on the established maximum average unit cost and units of work authorized:

Items of Work
in Exhibit "A"

3 - Drifting and crosscutting, 8600 ft. at $45.00/ft.	$ 387,000.00
4 - Ventilation raises, 250 ft. at $48.00/ft.	12,000.00
6 - Longhole percussion drilling, 20,000 ft. at $1.00/ft.	20,000.00
7 - Diamond drilling, 11,000 ft. at $6.35/ft.	69,850.00
Timbering drifts and crosscuts (20% of 8600 ft.) 1/ or 1720 ft. at $11.00/ft.	18,920.00
Assaying, 2500 determinations at $1.00/ea.	2,500.00
Subtotal	$ 510,270.00

1/ From the Examination Report.

The following listed items of work are authorized in Exhibit "A" of the contract, but no estimated costs are established. The costs as listed are taken from the Examination Report.

1 - Water disposal facilities	$49,562.85 1/	
2 - Pumps and pump column installation	18,532.39 1/	
5 - Water doors	1,960.00 1/	
		70,055.24
Total		$ 580,325.24
As against the total estimated cost in the contract		$ 564,880.00

Since the work under Items 1, 2, and 5 of Exhibit "A" will be performed first and reimbursement claimed, we will be in a quandry as to the extent of allowable costs. Therefore, it appears that either total allowable costs should be established for those Items or that all costs incurred under Categories (2) to (7), inclusive, be apportioned to and/or prorated to work Items 3, 4, 6, and 7, including costs applicable to work Items 1, 2, and 5. Otherwise, it appears that the total allowable costs of work under Items 1, 2, and 5 would have to be arbitrarily established as being the difference between $510,270.00 and $564,880.00, the total estimated cost of the project.

As the matter now stands, we do not have a firm basis by which to determine the extent of allowable costs under Items 1, 2,

and 5 for use in processing the Operator's accounting reports, and consequently are placed in the position of having to accept the Operator's apportionment between the various Items of work.

Labor, under Category (2)(c), is the uncertain element, on which we have no control, expenditures for which could throw the entire work program out of balance.

Because of the complexities involved in documenting costs incident to the work, the requirement for such documentation has been waived. In an operation of this kind, it is impossible for the Government representative to determine, on such widespread periodic inspections, that the charges made are a direct and necessary cost of performing the work.

When you have reviewed the matter, we will appreciate advice on each of the problems as posed, and instructions as to how we should proceed.

J. W. Townsend

J. W. Townsend

Enclosures

NEW PARK MINING COMPANY

KEETLEY, UTAH

August 4, 1958

DMEA Field Team
United States Bureau of Mines
1600 East First South
Salt Lake City, Utah

JULY REPORT UNIT #I

Re: Docket No. DMEA 4981, Contract E-1218

Dear Sirs:

We are happy to report that our DMEA project got under way July 1, 1958.

Work has commenced on Unit #I, "water disposal facilities." This involves installation of a sixteen inch transite pipe in our main haulage level. During the month, 518 feet of sixteen inch transite pipe was installed. Because of required moiling and blasting in making trench room for the pipe, we estimate the first 1,500 feet of this project to be the most difficult.

You will note that we have broken down the cost figures on Unit #I into cost per unit foot. This system will simplify our records in that the work is being done on a footage basis by the mine lessees at $2.00 per lineal foot plus fringes, supervision and necessary supplies.

According to our contract, the government's participation in the cost of the pipe would be 25%. Labor, supervision, accounting, fringes and a limited amount of other materials and supplies the government will participate at 50% of the cost. Using a pro-rata basis from our original estimate of costs for Unit #I as compared to the amount awarded by the government, we have contracted the laying of pipe on a footage basis to the mine lessees.

NEW PARK MINING CO.

Our plans are developing well towards Unit #2, "pumps and pump column installation." Company work on the 2005 level sump is progressing satisfactorily. The pumps and steel pump column have been ordered so that the next unit of work may be completed on schedule.

Very truly yours,

NEW PARK MINING COMPANY

Gale A. Hansen,
General Superintendent

GAH:bw
c.c.: Mr. C. L. Wilson
Mr. C. D. Harper

Form MEV-104 (Rev.)
(April 1952)

Budget Bureau No. 42-R1036.5

UNITED STATES
DEPARTMENT OF THE INTERIOR
DEFENSE MINERALS EXPLORATION ADMINISTRATION
OPERATOR'S MONTHLY REPORT AND VOUCHER

Month of July, 195 8 Docket No. DMEA 4981 Contract No. E-1218
Operator's Name New Park Mining Company Minerals Lead, Zinc, Copper
Address 907 Walker Bank Building, Salt Lake City, Utah
Contract Amount, $ 564,880.00 Government Participation: 50 % Amount, $ 282,440.00

ITEMS OF COSTS	FOR OPERATOR'S USE			FOR GOVERNMENT USE ONLY		
UNIT #I	Monthly Total	Totals Previously Reported	Totals To Date	Approved Monthly Total	Approved Totals Previously Reported	Approved Totals To Date
(1) Independent Short Form Contracts:						
Drilling						
Bulldozing						
Crosscutting						
Drifting						
(2) Labor and Supervision:						
Labor @ $2.00/ft.	$1,036.00	None	$1,036.00			
Supervision	650.00		650.00			
Technical Services						
(3) Operating Mat'ls. and Supplies:						
Timber						
Explosives						
Pipe						
~~Tank~~ 8 Moils @ $5.32	42.56		42.56			
Transite Pipe @ 50% Cost	902.61	None	902.61			
Pea Gravel ballast	80.33	None	80.33			
(4) Operating Equipment:						
Rental			1,025.56			
Purchase						
Depreciation						
(5) Initial Rehabilitation and Repairs						
(6) New Bldgs., Improvements, etc.						
(7) Miscellaneous:						
Repairs to Equipment						
Sampling and Analysis						
Payroll Taxes @ 11.5%	193.89		193.89			
Liability Insurance						
Accounting	250.00	None	250.00			
(8) Contingencies (specify):						
TOTALS	$3,155.39		$3,155.39			

I certify that the above bill is correct and just and that payment therefor has not been received.

Date Aug 7, 1958 Name New Park Mining Company

Per [signature] Title Vice Pres

*When a voucher is signed or receipted in the name of a company or corporation, the name of the person writing the company or corporate name, as well as the capacity in which he signs, must appear. For example: "John Doe Company, per John Smith, Secretary," or "Treasurer," as the case may be.

NOTE.—Title 18, U. S. Code (Crimes), section 1001, makes it a criminal offense to make a willfully false statement or representation to any department or agency of the United States as to any matter within its jurisdiction.

(Instructions on reverse)

Pursuant to authority vested in me, I certify that this account is correct and proper for payment in the amount of:

$

Signature
(Authorized Certifying Officer)

Date Vou. No.

Form MF-104A
(April 1952)

Budget Bureau No. 42-R1151.2

UNITED STATES
DEPARTMENT OF THE INTERIOR

DEFENSE MINERALS EXPLORATION ADMINISTRATION

OPERATOR'S UNIT COST AND PROGRESS REPORT

Month of July 1958 Docket No. DMEA 4981 Contract No. E-1218

Operator's Name New Park Mining Company Minerals Lead, Zinc, Copper

Address 907 Walker Bank Building, Salt Lake City, Utah

OPERATION	Unit	Costs This Month	Units This Month	Costs to Date	Units to Date	Unit Costs to Date	Authorized by Contract: Units	Authorized by Contract: Unit Costs
	Feet							
Drifting								
Crosscutting								
Raising								
Shafts								
Winzes								
Drilling: Core								
Churn								
Auger								
Stripping								
Trenching								
Test Pits								
Roads and Trails								
16" Transite Pipe	7140	$3,155.39	518	$3,155.39	518	$6.09	7140	
Total Distributed Costs								Total Costs Authorized by Contract
Operating Equipment Purchased								
Initial Rehabilitation and Repairs								
New Buildings, Improvements, etc.								
Total Costs								

The undersigned company, and the official executing this certification on its behalf, hereby certify that the information contained in this report is correct and complete to the best of their knowledge and belief.

Remarks: Calculated on percentage of DMEA Loan for Unit I - (Note Narrative)

Date Aug 7, 1958 Operator New Park Mining Company

Per [signature] Title Vice Pres.

NOTE.—Title 18, U. S. Code (Crimes), section 1001, makes it a criminal offense to make a willfully false statement or representation to any department or agency of the United States as to any matter within its jurisdiction.

(Instructions on reverse)

(For Government use only)

M. V. Hower, Mining Engineer, 8/11/58

224 New Customhouse
Denver 2, Colorado
August 20, 1958

8/26 C 220
8/27 GEF 800
11 ~~Bris~~ ~~500~~

Mr. Clark L. Wilson, Vice President
New Park Mining Company
Keetley, Utah

Re: Docket No. DMEA 4981 (Lead-Zinc-Copper)
Contract No. Idm-E1218
New Park Mining Company
(Mayflower mine)
Wasatch County, Utah

Dear Mr. Wilson:

In reference to your letter of August 18, 1958, a review of the contract discloses that there is no specific provision made for excavation of drill stations. In addition, it is stipulated under Category (1), Independent Contracts, that the maximum average unit cost "(includes all costs of drilling whatsoever except compressed air and water.)"

It should be realized, however, that in providing for the drilling on an independent contract basis at a maximum average unit cost of $6.35 a foot, and providing for supervision and other tangible costs, such as air compression, water, hoisting, pumping, equipment depreciation, etc. elsewhere on a cost incurred basis, that the over-all cost of the drilling will approach your over-all estimate of costs for performing the work.

Since the authority for allocating funds to DMEA contracts expired June 30, 1958, it appears that nothing can be done about the matter of increasing costs at this late date. However, if you wish to present the matter in detail in writing, we will be glad to forward it to the Washington Office, DMEA, for their consideration.

In reference to the maximum average unit cost established under Category (1), please refer to Annex II, Article 13, Changes and Added Provisions, item (c).

With best personal regards, I am,

Very truly yours,
original signed by
J. W. TOWNSEND

J. W. Townsend
Alternate Acting Executive Officer
DMEA Field Team, Region III

JWT:prl
cc: Chmn.Op.Comm.-2) w/copy of
Marshman-2) Operator's
Howes,DMEA/SLC) letter of
Corres. file) August 18.
Cooper
Chron.

NEW PARK MINING COMPANY

KEETLEY, UTAH

SALT LAKE CITY OFFICE
904 WALKER BANK BUILDING

DMEA
DEPARTMENT OF THE INTERIOR
AUG 19 1958
REGION III
DENVER, COLORADO

August 18, 1958

Mr. J. W. Townsend
Alternate Acting Executive Officer
DMEA Field Team, Region III
224 New Customhouse
Denver 2, Colorado

Re: Docket No. DMEA 4981
Contract Idm - E 1218

Dear Mr. Townsend:

We have spent considerable time analyzing the above exploration project contract in relationship to costs as allowed and costs as set up in our application. It would appear that in general some type of percentage cut was made which will, of course, require considerable operating ingenuity on our part.

One thing concerns us, namely, apparently no allowance was made for drill stations in the diamond drilling project. We had indicated approximately 15 drill stations at 20 feet each on the 2000 level or 300 feet of drift. We had also included one drill station as a 20 foot raise for the diamond drill hole on the 800 level. Again we can find no allowance for this work in the contract and very definitely feel it should be included. We would appreciate your interpretation on this particular point.

With best wishes, I am,

Very truly yours,

Clark L. Wilson

CLARK L. WILSON,
Vice President

CLW:ih

224 New Customhouse
Denver 2, Colorado
August 14, 1958

RECEIVED
AUG 18 1958
CODE
8/18 74.9 825
800
500

New Park Mining Company
907 Walker Bank Building
Salt Lake City, Utah

Re: Docket No. DMEA 1981
(Lead-Zinc-Copper)
Contract Idm-21218
New Park Mining Company
(Mayflower mine)
Wasatch County, Utah

Gentlemen:

Consistent with authority delegated the Executive Officer, DMEA Field Team, Region III, we hereby waive the requirement for you to provide documentary support of Form MF-104 (Revised April 1952) Operator's Monthly Report and Voucher, beginning with the month of July 1958, except for support of equipment purchases for which the individual costs exceed $50.00 as explained on the reverse side of Form MF-104 (Revised).

In lieu of documentary support of the monthly voucher, an auditor from the Contract Administration and Audit Division will make interim audits of the accounts pertaining to the exploration project and will make a final audit on completion or termination of the contract, before the final voucher is processed for reimbursement.

This waiver does not forego the requirement for a concise but complete, signed narrative report that must accompany the original and each copy of the Monthly Report.

Very truly yours,

Original signed by
J. W. TOWNSEND

J. W. Townsend
Alternate Acting Executive Officer
DMEA Field Team, Region III

JDC:RMH

cc: Chmn. Op. Comm. (2)
J. L. Chambers, Dir.,
Contract Adm.& Audit Div.,
Harshman (2)
Finance Office, Reg.III
Brading, DMEA Auditor
Howes, DMEA, SLC
Amend. file, Reg. III
Corres.file, Reg. III
Cooper
Chron

Original signed by
W. TOWNSEND

UNITED STATES
DEPARTMENT OF THE INTERIOR
DEFENSE MINERALS EXPLORATION ADMINISTRATION
224 New Customhouse
Denver 2, Colorado

June 30, 1958

RECEIVED JUL 3 1958

DATE		NOTE
6/3	C	220
7/3	C	215
7/3	to Pb.	500

Memorandum

To: Chairman, Operating Committee, DMEA

From: Alternate Acting Executive Officer, DMEA Field Team, Region III

Subject: Docket No. DMEA 4981 (Lead-Zinc-Copper), Contract No. Idm-E1218, New Park Mining Company (Mayflower mine) Wasatch County, Utah

Enclosed are the following pertaining to the subject docket:

(1) The Government's and Audit copies of executed Contract No. Idm-E1218, which was forwarded by your letter of June 23, 1958, for signature by the Operator.

(2) Two copies of the Operator's letter of June 27, 1958, whereby the executed copies of the contract were returned to this office.

(3) Two copies of letter from this office, dated June 30, 1958, whereby we forwarded the Operator's copy of the contract, blank report forms, instructions relative to reporting on work performed under the contract, and procedure to be followed in communicating with this office on all matters pertaining to the contract.

The contract dated June 23, 1958, provides for exploration work estimated to cost $564.880.00, toward which the Government will contribute 50 percent, or not in excess of $282,440.00.

Copies of the contract have been distributed to the Finance Office and others concerned in Region III.

J. W. Townsend

Encls.

W.C.

224 New Customhouse
Denver 2, Colorado
JUN 30 1958

Mr. Clark L. Wilson, Vice President
New Park Mining Company
904 Walker Bank Building
Salt Lake City 11, Utah

Re: Docket No. DMEA 4981 (Lead-Zinc-Copper)
Contract No. 14s-[illegible]
New Park Mining Company
(Mayflower mine)
Wasatch County, Utah

Dear Mr. Wilson:

Enclosed is the "Operator's Copy" of Exploration Project Contract No. 14s-[illegible], Docket No. DMEA 4981.

Also enclosed are six copies of Form MF-104, "Operator's Monthly Report and Voucher," and six copies of Form MF-104A, "Operator's Unit Cost and Progress Report." At the end of the first calendar month after work is commenced, and monthly thereafter, you are required to submit the original and four copies of each form to the

Defense Minerals Exploration Administration
1600 East First South Street
Salt Lake City 1, Utah.

The extra copy is for your records.

Forms MF-104 and MF-104A are to be combined into five sets of one of each form. Each set of the combined forms is to be accompanied by a map or sketch, showing the location and extent of work performed, and a signed narrative report which describes the work performed, conditions encountered, and results of the work. The monthly accounting report will not be processed for reimbursement unless it is accompanied by a signed narrative report and other required or pertinent data. Additional copies of Forms MF-104 and MF-104A will be sent you each month on receipt of your report for the prior month.

For your information, and in reply to many questions that have been asked, after Forms MF-104 and MF-104A are received, an engineer will check progress on the project and review your accounts, after

which the report forms will be forwarded to this office for administrative examination and vouchering. If the report is in order, a check will be issued by the Treasury Department for the Government's portion of the approved costs. If you have any difficulty in completing these forms and the reports, please call on either the field representatives or this office for assistance.

Your attention is directed to the provision in the contract that the diamond drilling described in Exhibit "A", Item 7, is subject to prior Government approval. In the matter of your claim for reimbursement of drilling costs under the terms of the contract, reimbursement to you will be on the basis of a hole or holes completed to the objective which has, or have, been drilled in compliance with all provisions in the contract pertaining thereto. Therefore, your monthly report should include only such holes which are completed to that extent and the required records made a part of your claim for reimbursement.

The contract is prepared on Form MF-200, and as outlined in Exhibit "A" attached to the contract, the estimated allowable costs are broken down into categories which conform to the numbered "Categories" in Article 6 of the contract form and also conform to the numbered item for reporting on Form MF-104. Please refer to Article 6 of the contract form, which may be further qualified by special notations in Exhibit "A", for information as to which unit costs and extended total amounts are "allowable maximums" to which the Government will contribute its share as provided for in the contract. Under the provisions of Article 6, the work outlined under Category (1) is to be performed by an independent contractor and charges for such work must be documented by signed or certified true copies of billings from the subcontractor. For further information relative to documentation of costs, please refer to instructions on the reverse side of Form MF-104. Also please refer to the instructions on the reverse side of Form MF-104A regarding preparation of that form.

In reference to the drilling work under Category (1) of Exhibit "A", please refer to added provisions under Article 13(c) of the contract form pertaining to the average unit cost. If costs incurred any month cause the average unit cost to be in excess of the maximum allowable average unit cost, such excess costs will be suspended, subject to reinstatement at a later date within the aggregate of such suspensions, should the costs incurred any subsequent month cause the average unit cost to fall below the maximum allowable average unit cost. The foregoing applies to each separate class of drilling under each work "Stage."

In the event you desire to perform the work under Category (1) on company account instead of subcontracting it, as provided in the contract, it will be necessary that you request and obtain an appropriate amendment to the contract before reimbursement can be made to you for the Government's portion of the allowable incurred costs.

Your requests to this office for work approval, changes in the contract, or any other communication pertaining to operations under the contract, must be in writing, of which please supply the original and five copies, each copy complete with maps or other pertinent data. Each request for action by this office must pertain to one matter only. Such requests are not to be incorporated in your narrative report accompanying monthly progress report Forms MF-104 and MF-104A.

The proposed work is partly shown on the map, "Figure 8," attached to the contract. Should conditions encountered necessitate any appreciable change in the location or direction of the work, it is suggested that concurrence or approval of this office for the change be obtained prior to performance of the work.

No oral statement of any person shall be construed to modify or change the terms of the contract. Field representatives of the Government are not authorized to approve any changes in the work program or contract provisions. Such approval can be given only by the Washington Office, DMEA, or by the DMEA Field Team, Region III.

It is a regulation that reimbursement for the cost of work accomplished prior to the date of the contract will not be allowed. It is a requirement and imperative that you notify this office in writing the date work actually commences under the contract.

Very truly yours,

Original signed by
J. W. TOWNSEND

J. W. Townsend
Alternate Acting Executive Officer
DMEA Field Team, Region III

Enclosures

JWT:pri

cc: Chem. Op. Comm. (2)
Finance Office, Reg. III
Amendment file, Reg. III
Harshman (2)
DMEA/SLC(Howes)
Corres. file
Townsend
Chron.

NEW PARK MINING COMPANY

KEETLEY, UTAH

SALT LAKE CITY OFFICE
904 WALKER BANK BUILDING

June 27, 1958

DMEA
DEPARTMENT OF THE INTERIOR
JUN 30 1958
REGION III
DENVER, COLORADO

Mr. J. W. Townsend
Alternate Acting Executive Officer
DMEA Field Team, Region 3
224 New Customhouse
Denver 2, Colorado

Re: Docket No. DMEA 4981
Exploration Project Contract
Idm - E1218

Dear Mr. Townsend:

I wish to acknowledge your letter of June 24, and the four copies of the above referenced Exploration Contract between the Defense Minerals Exploration Administration and New Park Mining Company.

You will note that they have been signed by Mr. W. H. H. Cranmer as President of New Park and certified by Mr. Robert L. Cranmer, the Secretary of our Corporation.

We are very pleased that the DMEA was able to complete our application and prepare the Contract in such short time, and we certainly hope that the Project will be as successful as we anticipate.

We are in the process of analyzing the various provisions of the Contract and will contact you in the future regarding your interpretation.

Very truly yours,

Clark L. Wilson

CLARK L. WILSON,
Vice President

CLW:ih

REGISTERED
RETURN RECEIPT REQUESTED

Form 7
(2) 5)

OFFICIAL FILE COPY

Date	Surname	Code
6/18	Zimmerl	500
"	Chamber	800
6/20	GLB	130
6/23	Johnson	110
"	Gratenby	100
6/23	C	220
		500

500

JUN 23 1958

B

Mr. J. W. Townsend
Alternate Acting Executive Officer
DMEA Field Team, Region III
224 New Customhouse Building
Denver 2, Colorado

Re: Docket No. DMA-4981 (Copper-Lead-Zinc)
New Park Mining Company
Mayflower Mine
Wasatch County, Utah

Dear Mr. Townsend:

Relative to your memorandum of May 28, 1958, we are enclosing the original and four copies of a proposed long-form contract for the cited project, which have been signed by the Administrator, for the Government. The complete contract consists of the Form (MF-200), Annex I (two pages), Annex II (two pages), Exhibit "A" (six pages), and three maps. Two copies each of all but the form are enclosed for the use of the Field Team.

A proper Consent to Lien and Subordination Agreement will be required prior to presenting the contract for signature and, of course, no contract may be executed after midnight, June 30, 1958.

In arriving at the contract total and the various permissable average maximums (page 3 of Exhibit "A") certain changes have been made in the submitted estimates. For all material considered as salvageable (top of page 4, Exhibit "A") the Government will contribute to only half of fifty percent of the actual cost, but will thereafter retain no equity. Furthermore, in estimating its costs for drifting and crosscutting, the Applicant used an estimate of four feet per shift advance. We have recalculated this on a basis of five feet per shift advance, or 250 feet monthly. Such a figure is assuredly within reason, on other projects (8 X 8 ft. headings) we have had average monthly advances in one heading of 370 feet.

8623

The cost of $5.58 per foot for power was considered as excessive; it is not considered as likely that the exploration work should materially increase the volume of water except perhaps in its latter stages.

In calculating depreciation, we have not accepted the item "Mayflower Mine, $138,081.83 book value at 20 per cent". We cannot provide for depreciation when we do not have fully itemized and detailed listing. However, in setting up the sum of $47,700.00 for depreciation we definitely do not feel that we have been niggardly.

If the contract meets with your approval, and after receipt of the proper Owners Consent to Lien and Subordination Agreement (which should be attached to the contract), kindly present it to the Applicant for approval and signature and, when completed, distribute the copies in the usual manner. Otherwise, and if any proposed change should lie beyond your delegated authority, return all copies to us with your recommendations.

Sincerely yours,

George C. Selfridge

Chairman, Operating Committee (GB)

WRGriswold/er 6/18/58

Copy to: Docket
Admr R File
Op. Committee
~~Mr. McMahon, USBM~~ -- Mr. Bishop, USBM
Mr. Kiilsgaard, USGS
Chron.

Enclosures

APPROVED:

Frank D. Lamb (GB)
Member, Bureau of Mines

N. E. Nelson (GB)
Member, Geological Survey

P. S. The necessary copies of the Owners Consent to Lien and Subordination Agreement have been received and are attached to contract copies.

Please note paragraph (c) of Annex II. Payments for work items should be guaged so that the average unit costs are not exceeded, nor the maximum amounts, for any work item.

Mr. Selfridge -

Suggested changes and corrections

Show vertical plans boundary on Fig. 8.

Looks as though a good size block of ground is improperly excluded lying in area below the 1880 level bounded by the plane and the north, east and west boundaries of the project.

Excluded block should be limited in width along proposed drift. Also should include provision that any new ore bodies in excluded block discovered by work would be subject to DMEA royalty.

Annex II - third paragraph, delete words within parenthesis.

Also, your other points.

FEJohnson

EXPLORATION PROJECT CONTRACT
NEW PARK MINING COMPANY
DOCKET NO. DMEA-4981

ANNEX II

Article 13. Changes and added provisions.-

(a) In Article 8, the period "fifteen years" is substituted for the period "ten years".

(b) A special "Agreement Concerning Royalty" is added as follows:

"Nothwithstanding the certification provisions of Article 8, and with no further action required on the part of the Government, the Operator, as principal if the Operator is the producer or as a surety if the Operator is not the producer, shall pay to the Government a royalty on any of its production, regardless of where it comes from (~~except production from the 'excluded land' described in Annex I~~) that is transported through ~~any shaft, winze, raise, cross-cut, drift, or~~ any other new working to the cost of which the Government has contributed, or any portion of said new workings, for the same period as is described in Article 8(b)(2) of the contract and pursuant to the terms of Article 8(c) et seq. However, in no event shall more than one royalty be due on or paid on the same production.

"In the event that production from outside the boundaries of the land described in Article 2 is transported through the workings described above, and neither the Operator nor any subsidiary or affiliate thereof has any interest in said production, the Government shall be paid by the Operator the fixed rate of 5 per cent of the total transportation charges received by the Operator."

(c) Notwithstanding any other provision of the contract, the allowable unit cost of a work item (drilling and the asterisked items in Exhibit "A") is the average unit cost per foot computed

Unpatented lode-mining claims leased from U. S. Smelting, Refining and Mining Co.

Patents Not Completed

	Mineral Survey No.
Link	7130
Marne	7130
*Martha	7130

Land ~~included in part~~ excluded from contract

All of the area covered by the claims listed herein lying ~~below~~ above the 1880 level and east of a vertical plane at approximately 2,120 feet S. 65° W. of the Mayflower shaft, the plane being more particularly described as follows:

> A vertical plane striking N. 25° W., through mine survey coordinate point 7570 North 7400 East, which bears S. 65° W., 325.0 feet from survey station 5539 on the 1630 west level. The vertical plane is approximately indicated on the attached map entitled "Figure 10, Longitudinal Section Along the Mayflower - Pearl Fissure System...". x/ excepting ~~veins~~ new veins and extensions thereof which may be discovered or developed by the work [illegible]

Land included without limitation

All of the area covered by the claims listed herein lying westerly of the vertical plane described above is included without limitation as land that is subject to the provisions of the contract.

The land is shown on the attached map entitled "New Park Mining Company, Property Map".

---

x/ The area of the claims listed in Annex I that is excluded from Annex I by the description of the vertical plane is referred to in Annex II as "excluded land".

on the basis of all the actual allowable costs of said work item incurred by the Operator: Provided, That the Government will not contribute to any portion of the average unit cost of a work item that exceeds the estimated (maximum) unit cost of said item set forth in Exhibit "A"; and: Provided further, That the Government, during the performance of work, may contribute to actual costs of a work item to the extent that in its opinion the maximum unit cost will not be exceeded upon the completion or termination of that work item.

(d) In the last sentence of Article 6(a), the words "Article 8" are substituted for the words "Article 9".

(e) In Article 3, the words following the reference to Article 10 are deleted, and the following words are substituted: "shall have completed the work"

Excerpt from Mr. Mittendorf's diary, 6/20/58:

Clark Wilson phoned regarding DMEA-4981. I told him the case would come before the Committee late today, but I doubted very much that it would clear in time for the mail today. He seemed to think that early next week would be o.k.

He said either he or Harry Cramner, or both, will go to Denver to sign the contract. He wondered if it would be necessary for the secretary of New Park to also make the trip. He said about a month ago the Board of Directors passed a resolution authorizing either the president or vice president to execute the contract in behalf of the company. I felt that this would be adequate, but promised to check with Legal. He said he would be in touch with me sometime next week for our ruling.

DMEA Form 7
(12-56)

OFFICIAL FILE COPY

Date	Surname	Code
6/19	[illegible]	500
6/19	BCS	130
"	Johnson	~~110~~
"	[illegible]	~~130~~
		~~110~~
		100
6/19	C	220
		500

JUN 19 1958

WRGriswold/er Rm 4444 - Ext. 3669

TELETYPE
XXXXXXXXXXXXXXXXXXXXXXXXXXXXXXXX
XXXXXXXXXXXXXXXXXXXXXXXXXXXXXXXX

DMEA - Base Metals Division

14X4401(01) Revolving Fund,
Defense Production Act, Interior,
(Transfer to Office of Secy.)

DATE:

TO: Mr. J. W. Townsend, Alternate Acting Executive Officer,
DMEA Field Team, Region III, 224 New Customhouse Bldg.,
Denver, Colorado

Re Docket DMEA-4981, New Park Mining Company, Consent to

Lien forms have been received ~~today~~ [redacted]

George C. Selfridge

Chairman, Operating Committee (HB)

WRGriswold/er 6/19/58
Copy to: Docket
Admr R File
Op.Committee
Mr. Bishop, USBM
Mr. Kiilsgaard, USGS
Chron.
Confirmation Copy

8623

Mr. George C. Selfridge
Chairman, Operating Com.
DMEA

DN 235 BUR MINES 6-18-58 4-23

GEORGE C SELFRIDGE, CHAIRMAN, OPERATING COM., DMEA

REURTT 6-17, DOCKET DMEA 4981, NEW PARK MINING CO. CLARK WILSON CONTACTED BY TELEPHONE AND HE REITERATED ADVICE THAT CONSENT TO LIEN FORMS WERE MAILED AS WE PREVIOUSLY ADVISED. HOWEVER, HE HAS TWO EXECUTED COPIES IN HIS POSSESSION AND WILL HAVE THEM DUPLICATED FOR TENTATIVE USE WITH THE CONTRACT UNTIL OTHER FOUR COPIES SHOW UP.

J W TOWNSEND, ALTERNATE ACT. EXEC. OFFICER

END WT 4-1 4-25SW

FILE COPY
DMEA
RECEIVED JUN 19 1958

DATE	INITIALS	CODE
6/19	C	220
6/19	Wells	500

Denver, Colorado

DMEA Form 7
(12-56)

OFFICIAL FILE COPY

Date	Surname	Code
6/18	Griswold	500
6/18	[illegible]	130
6/18	Lamb	130
6/18	Kiilsgaard	130
"	Johnson	110
"	[illegible]	100
6/19	[illegible]	220
		500

JUN 18 1958

WRGriswold/er Rm 4444 - Ext. 3669

DMEA - Division of Base Metals

14X4401(01) Revolving Fund,
Defense Production Act, Interior,
(Transfer to Office of Secy.)

T E L E T Y P E

XXXXXXXXXXXXXXXXXXXXXXXXXXXX
XXXXXXXXXXXXXXXXXXXXXXXXXXXX

Date:

To: Mr. J. W. Townsend, Alternate Acting Executive Officer, DMEA Field Team, Region III, 224 New Customhouse Bldg., Denver, Colorado

Reurtt June 17, 1958, Docket DMEA-4981, New Park Mining Company, Consent to Lien forms. Nothing received here yet, noon Wednesday, suggest Applicant recheck.

George C. Selfridge

Chairman, Operating Committee

WRGriswold/er 6/18/58
Copy to: Docket
Admr R File
Op. Committee
Mr. Bishop, USBM
Mr. Kiilsgaard, USGS
Confirmation Copy
Chron.

8623

Chairman Oper. Comm DMEA.

OFFICIAL FILE COPY
DMEA
RECEIVED JUN 18 1958

DATE	INITIALS	CODE
6/18	C	220
		500

DN 235 BUR MINES 6-17-58 4-28

CHAIRMAN OPERATING COMMITTEE, DMEA

RE DOCKET DMEA 4981, NEW PARK MINING COMPANY, TELEPHONE CONVEEXXXX CONVERSATION WIT H XXX WIT XX WITH W R GRISWOLD TODAY. CLARK WILSON ADVISED THAT FUXXX FOUR COPIES OF CONSENT TO LIEN FORM FORWARDED TO THE ADMINISTRATOR BY U. S. SMELTING FROM BOSTON VIA CERTIFIED AIR MAIL JUNE 13.

J W TOWNSEND

Denver Colo.

BUREAU OF MINES
WASHINGTON, D. C.

1958 JUN 18 AM 7:42

DMEA Form 7
(12-56)

OFFICIAL FILE COPY

Date	Surname	Code

June 17, 1958

Memorandum for the Docket

From: Director, Division of Base Metals

Subject: Phone Conversation with Mr. Townsend about Docket No. DMEA-4981, New Park Mining Company, Mayflower Mine, Wasatch County, Utah, Copper-Lead-Zinc.

Today, the undersigned phone Mr. Townsend, Acting Executive Officer, Region III, to advise the Applicant that, in case a contract should be tendered, the Consent to Lien and Subordination Agreement would be required prior to contract execution.

The Applicant had previously stated that these forms would be sent to Washington, however, at this late date, such forms should go to the Denver office.

WRG

W. R. Griswold

8623

UNITED STATES
DEPARTMENT OF THE INTERIOR
OFFICE OF THE SOLICITOR
WASHINGTON 25, D. C.

Memorandum

JUN 17 1958

To: Administrator, DMEA
Through: Director, Division of Base Metals

From: Associate Solicitor, Division of Mineral Resources

Subject: Docket No. DMEA-4981, New Park Mining Company, Mayflower Mine, Wasatch County, Utah

As requested in Mr. Griswold's memorandum dated June 10, 1958, we have prepared the attached contract.

We did not have the benefit of the property map when we reviewed the land interests of the applicant; and we did not check the accuracy of the description of the equipment listed for depreciation in Exhibit A.

The land listed in Annex I is taken from the Field Team's report as being the land that is the subject of the contract, and is much more extensive than the land listed in the application. In this regard, the Sitka and Martha claims, listed as jointly owned by the applicant and U. S. Smelting Refining and Mining Company, are referred to in the Field Team's report, and in Annex I of the Contract, as also being leased to the applicant by U. S. Smelting Refining and Mining Company to the extent of its interest. These claims do not appear as leased in the lease and option agreement, dated January 27, 1956, pursuant to which the applicant holds possession of the bulk of the leased claims, and this item should be clarified.

The Consent to Lien and Subordination Agreement of the U. S. Smelting Refining and Mining Company is required in connection with all the claims listed in Annex I as leased.

J. L. Hofflund

Attachment

RECEIVED

224 New Customhouse
Denver 2, Colorado
June 24, 1958

6/26 N.B. 935
6/27

CERTIFIED MAIL
VIA AIR MAIL

Mr. Clark L. Wilson, Vice President
New Park Mining Company
904 Walker Bank Building
Salt Lake City 11, Utah

Re: Docket No. DMEA 4981 (Lead-Zinc-Copper)
New Park Mining Company
(Mayflower mine)
Wasatch County, Utah - Proposed
Exploration Project Contract Dm-M121B

Dear Mr. Wilson:

Enclosed are the Government's, Audit, Finance Office, and Field Team copies of proposed Exploration Project Contract No. Dm-M121B, which has been prepared pursuant to your application for Government assistance in exploration work under the Defense Minerals Exploration Administration program.

You will note in Exhibit "A", attached to the contract, page 3, under Category (3), Operating Materials and Supplies, that the Government's contribution to the cost of listed materials and supplies may not exceed one-half of 50 percent of the actual cost of such items and that the Government will not acquire any salvage interest in such materials and supplies so contributed to the costs thereof.

If the contract is satisfactory, all copies are to be signed by an official of New Park Mining Company authorized to sign such an instrument, the signer's title inserted, the signature attested to by the Secretary of the Company, the corporate seal affixed, and all copies promptly returned to this office. In reference to the return of the contract to this office, in order for it to become effective, it must be signed and the envelope postmarked for return to this office not later than midnight June 30, 1958.

In the event the contract is not satisfactory, all copies are to be returned promptly to this office, together with your comments on or objections to the contract.

[illegible]

Your attention is especially directed to three provisions in the contract:

1. The Government will not contribute to the costs of any of the work that is provided for in the contract which is performed prior to the date of the contract.

2. The contract requires completion of the exploration work by the date fixed therefor. Approval must be obtained from the Government for any suspension of work which may result in failure to complete the work by the date specified.

3. Royalty is due the Government on all production from the land described in the contract, beginning on the date of the contract.

If the contract is satisfactory, and upon return of all copies properly signed, the "Operator's Copy" of the contract will be forwarded to you, together with blank report forms and instructions relative to reporting on work performed under the contract. Also, instructions will be given as to the procedure to be followed in corresponding with the Government in matters concerning operations under the contract.

Very truly yours,

Original signed by
J. W. TOWNSEND
J. W. Townsend
Alternate Acting Executive Officer
DMEA Field Team, Region III

Enclosures

JWT:prl

cc: Chan. Op. Comm. (2)
Harshman (2)
DMEA/SLC(Howes)
Docket
Townsend
Chron.

NEW PARK MINING COMPANY

KEETLEY, UTAH

SALT LAKE CITY OFFICE
904 WALKER BANK BUILDING

OFFICIAL FILE COPY
DMEA
RECEIVED JUN 23 1958

DATE	INITIALS	CODE
6/23	C	220
6/24	WPS	502

June 19, 1958

Mr. C. O. Mittendorf, Administrator
Defense Minerals Exploration Administration
Washington 25, D. C.

Dear Mr. Mittendorf:

I understand from Mr. James Townsend in Denver, that the Consent to Lien and Subordination Agreement from United States Smelting Refining and Mining Company, has not arrived at your office. This is in connection with our DMEA Application No. 4981.

I am enclosing one signed and three photostatic copies and have sent similar material to Denver, to be sure this matter is properly covered.

I am also enclosing a copy of the covering letter addressed to you by Mr. Francis Fiske and sent by Certified Airmail on June 13, 1958.

Very truly yours,

Clark L. Wilson

CLARK L. WILSON,
Vice President

CLW:ih

COPY

UNITED STATES SMELTING REFINING AND MINING COMPANY
75 FEDERAL STREET
BOSTON 6, MASSACHUSETTS

OFFICIAL FILE COPY
DMEA
RECEIVED JUN 23 1958

DATE	INITIALS	CODE

For NEW PARK MINING COMPANY

CERTIFIED AIR MAIL June 13, 1958

Mr. C. O. Mittendorf, Administrator
Defense Minerals Exploration Administration
Washington 25, D. C.

Dear Sir:-

At the request of New Park Mining Company we are enclosing four copies of Consent to Lien and Subordination Agreement executed on behalf of this Company under date of June 13, 1958, in connection with New Park Mining Company's application for DMEA Exploration Project Contract which covers part of the property included in Lease and Option made January 27, 1956 between this Company and New Park Mining Company.

Yours very truly,

Francis Fiske

Francis Fiske
Secretary

cc-New Park Mining Company

MF-205
(Combines and supercedes MF-202 and MF-203)
June 1956

RECEIVED
JUL 23 1958
D.M.E.A.

For Government's Use Only
EXPLORATION PROJECT CONTRACT
Operator _____
Docket No. DMEA- _____
Contract No. Idm-E _____
Contract Date _____

CONSENT TO LIEN
and
SUBORDINATION AGREEMENT 1/

To the United States of America:

Referring to that certain land in the County of Summit and [redacted], State of [redacted], described as follows: 2/

[redacted]

which is the subject of a proposed exploration project contract, hereinafter called the "contract," with the United States of America, hereinafter called the "Government;" in consideration of the contract and as an inducement to the Government to enter into it, the undersigned hereby--

1. Undertakes and agrees that property in which the Government may acquire an interest or equity under the contract may be dismantled, severed from the land, and removed, as may be provided in the contract; and the Government's interest and equity in such property shall be prior and superior to any adverse right or claim of the undersigned;

2. Grants to the Government a lien upon all of the undersigned's right, title, and interest in the land and upon any production of minerals therefrom, to secure the payment to the Government of a percentage royalty on production as may be provided for by the Contract;

3. Subordinates the undersigned's right, title, claim, or interest in or against the land and in any production therefrom to the rights of the Government under the contract with respect to royalty on production and liens to secure same;

4. Represents and undertakes that it does not know of any claim, lien, or encumbrance upon the undersigned's right, title, claim, or interest in or against the land other than the following: (If "none" insert the word "none." Do not leave lines blank.)

An equitable claim of New Park Mining Company in 0.90 acres in the easterly portion of said Martha claim and the paramount title of the United States in the Link, Martha and Marne unpatented claims.

1/ Mining or production from the land is not required, and in the absence of production there is no obligation to pay royalty to the Government.

2/ Either (a) insert the legal description of the land, or (b) strike out the words "as follows" and insert "in a lease [or contract, deed, or other document] dated _____, and recorded in Book _____, Page _____, official records of said county." If (b) is used, the book and page of recordation cannot be dispensed with. If the space provided is insufficient, use an Annex, and refer to the Annex in the space.

5. Undertakes and agrees (a) neither to commit any act nor assert any claim in conflict with the provisions of this Agreement; and (b) to give advance notice of the Government's rights under this Agreement to any subsequent transferee, mortgagee, encumbrancer, or lessee of any of the undersigned's right, title, claim, or interest in or against the land, or any production therefrom furnishing the Government with two copies of such notice; and

6. Consents to all amendments (including an agreement of termination) and assignments of the contract without notice thereof, and undertakes and agrees that this Agreement shall extend and apply thereto.

7. Added provision: None (State "None" or "See Annex No.____")

Dated this 13th day of June, 1958.

United States Smelting Refining and Mining Company	[Seal]	1019 Newhouse Building (P. O. Box 1980)	[Address]
C. G. Rice	[Seal]	Salt Lake City 10, Utah	[Address]
By C. G. Rice, Executive Vice President	[Seal]		[Address]
	[Seal]		[Address]
	[Seal]		[Address]
	[Seal]		[Address]

I, Francis Fiske certify that I am the Secretary (Secretary, etc.) of the corporation named herein; that C. G. Rice who signed this agreement was then Executive Vice President (President or Vice-President, etc.) of said corporation; that said agreement was duly signed for and in behalf of said corporation by authority of its governing body, and was within the scope of its corporate powers.

Francis Fiske

[Corporate Seal]

EXHIBIT I

Those certain lode mining claims situate in Section 34, Township 2 South, Range 4 East, Salt Lake Meridian, in Blue Ledge Mining District, in Wasatch County, State of Utah, particularly described as follows:

All of the following patented lode mining claims:

Dew Drop, Ethel, Hornet, Lookout Mountain, Lookout Mountain No. 2, all Mineral Survey No. 7130 and all patented under United States Patent Number 1174018, recorded in the records of Wasatch County in Book 11 at pages 213 and 214.

The described portions of the following patented lode mining claims:

Ben Butler, Mineral Survey No. 6642.

All that part of said Ben Butler lode mining claim lying West of the West end line of the Success No. 1 and Phyllis lode mining claims, Mineral Survey No. 6810, and West of a line projected North from the northwest corner (Corner No. 1) of said Success No. 1 lode.

Sitka, Mineral Survey No. 7126.

All that part of said Sitka lode mining claim lying South of a line drawn from the southeast corner of the San Diego lode mining claim, Lot No. 207, to the southwest corner of Oom Paul lode mining claim, Mineral Survey No. 5027.

A two-thirds undivided interest in and to that part of said Sitka lode mining claim lying North of the above described line.

All of the Martha unpatented lode mining claim, the Amended Location Notice of which is recorded in the records of Wasatch County in Book 8 at page 341.

All of the following unpatented lode mining claims situate in Sections 27 and 34, Township 2 South, Range 4 East, Salt Lake Meridian, in Uintah and Blue Ledge Mining Districts, in Summit and Wasatch Counties, State of Utah.

	Location Notice or Amended Location Notice Recorded in Records of			
	Summit County		Wasatch County	
Claim	Book	Page	Book	Page
Link	5	10	8	366
Marne			6	235

- - - - - -

June 11, 1958

4981

Excerpt from Mr. Mittendorf's diary, 6/13/58:

Clark Wilson phoned from Wallace, Idaho, where he is attending a Convention.

Clark called primarily to see what progress was being made on his application. I told him it was progressing normally and had been submitted to Legal. He wondered if it would go to the Operating Committee next week, but I thought the week of the 23d would be more likely.

CABLE ADDRESS, "SMELT[illegible]O"

P. O. BOX 2137

UNITED STATES SMELTING REFINING AND MINING COMPANY

75 FEDERAL STREET

BOSTON 6, MASS.

OFFICIAL FILE COPY
DMEA
RECEIVED JUN 19 1958

DATE	INITIALS	CODE
6/19	C	220
6/19	WPM	500

CERTIFIED AIR MAIL

June 13, 1958

Mr. C. O. Mittendorf, Administrator
Defense Minerals Exploration Administration
Washington 25, D. C.

Dear Sir:-

At the request of New Park Mining Company we are enclosing four copies of Consent to Lien and Subordination Agreement executed on behalf of this Company under date of June 13, 1958, in connection with New Park Mining Company's application for DMEA Exploration Project Contract which covers part of the property included in Lease and Option made January 27, 1956 between this Company and New Park Mining Company.

Yours very truly,

Francis Fiske

Francis Fiske
Secretary

cc-New Park Mining Company

UNITED STATES
DEPARTMENT OF THE INTERIOR
BUREAU OF MINES
WASHINGTON 25, D. C.

OFFICIAL FILE COPY
DMEA
RECEIVED JUN 12 1958

June 11, 1958

Re: DMEA 4981
$730,000; Silver-Copper-Lead-Zinc
New Park Mining Company
Mayflower Mine
Wasatch County, Utah

~~Memorandum~~

To: W. R. Griswold, DMEA

From: H. M. Callaway, USBM

Subject: Review of field examiners report dated May 27 and received in Washington May 29, 1958.

The field examiners have appraised a proposal to explore the intersection of a fracture zone with the Mayflower-Pearl fissure system in the area of carbonate rocks below the Humbug formation and above the Ophir Shale. The fracture zone is known to be mineralized from drift intersections on the Star-Galena and Mayflower adit levels.

The applicant proposed exploration of the target by shaft-sinking through the D-4 diorite from the west end of the Mayflower adit level. Recognizing the section between the base of the present Mayflower shaft and the downward-projected mineralized fracture zone is also a worthy exploratory objective, the field examiners have presented a revised approach that should permit progressive evaluation of results. Their plan calls for driving southwestward from the shaft on the 2005 level through the Deseret, Madison, and Jefferson formations to the crest of the anticline, thereby piercing the defined target.

I believe the revised approach would minimize the effect of unknown factors such as (1) amount of post-Maxfield erosion, (2) extent of thrust-faulting known to the southeast and possibly projecting into the target area, (3) possible cut-out of the carbonate beds by D-4 quartz diorite porphyry.

I recommend DMEA acceptance of the field examiners' proposals. I also submit that a clause should be included in the contract that allows DMEA to terminate the project at any time it judges the chances for successful completion does not justify further expense. I believe this is desirable due to the unknown factors cited above.

H. M. Callaway

H. M. Callaway

Copy to Division of Minerals
Branch of Base Metals (2)
Mr. Lamb
Mr. Kiilsgaard
F I L E S

DMEA F
(12-5

OFFICIAL FILE COPY

Date	Surname	Code

500

June 10, 1958

Memorandum

To: Associate Solicitor, Division of Mineral Resources

From: Director, Division of Base Metals

Subject: Preparation of Proposed Contract for Docket No. DMEA-4981, New Park Mining Company, Mayflower Mine, Wasatch County, Utah, Lead-Zinc-Copper-Gold and Silver.

Will you kindly prepare a long-form contract along the lines of the attached draft. 3 maps go with the contract, 2 are attached and we will send the other one when it is printed, in a few days.

W. R. Griswold

W. R. Griswold

WRG/er
Copy to: Docket
Chron.

8623

EXPLORATION PROJECT CONTRACT
NEW PARK MINING COMPANY
DOCKET NO. DMEA-4981

ANNEX I

The land covered by the contract consists of the following patented and unpatented claims:

Patented lode-mining claims owned by New Park Mining Company

Miriam No. 1	Mineral	Survey	No.	206	Sofia	Mineral	Survey	No.	99
Miriam No. 2	"	"	"	206	Massoppa	"	"	"	169
Fisher No. 1	"	"	"	6980	Rising Star	"	"	"	170
*Sitka (1/3 int.)	"	"	"	7126	Estella	"	"	"	167
W. H. C.	"	"	"	200	Success No. 1	"	"	"	6810
Ammie	"	"	"	200	Crescent	"	"	"	5087
Sun Set No. 2	"	"	"	168	Phyllis	"	"	"	6810
Glencoe	"	"	"	98	Mary Jane	"	"	"	6810
North Side No. 3	"	"	"	100					

Patented lode-mining claims leased from U. S. Smelting, Refining & Mining Co.

Lookout Mountain	Mineral	Survey	No.	7130
Lookout MountainNo. 2	"	"	"	7130
Ben Bulter	"	"	"	6642
Dew Drop	"	"	"	7130
Ethel	"	"	"	7130
Hornet	"	"	"	7130

Unpatented lode-ming claims leased from U. S. Smelting, Refining & Mining Co.

Patents not completed

Link	Mineral	Survey	No.	7130
Marne	"	"	"	7130
*Martha				7130

* Jointly owned by New Park Mining Co. and United States Smelting, Refining and Mining Co. New Park Mining Co. has a lease on United States Smelting, Refining and Mining Company's interest.

The area subject to lien will be further limited to the block of ground below the 1880 level from the east boundary of the DMEX property to a plane, approximately 2,120 feet S. 65° W. of the Mayflower shaft, described as follows:

> A vertical plane striking N. 25° W., through mine survey coordinate point 7570 North 7400 East, which bears S. 65° W., 325.0 feet from survey station 5539 on the 1630 west level.

There will be no vertical limits on the property southwest of the above-described plane.

The land pertaining to the contract is shown on the attached map entitled "New Park Mining Company, Property Map".

The vertical limitation referred to is approximately indicated on the attached map entitled "Figure 10, Longitudinal Section Along the Mayflower - Pearl Fissue System - - -."

EXPLORATION PROJECT CONTRACT
NEW PARK MINING COMPANY
DOCKET NO. DMEA-4981

EXHIBIT "A"

Description of the Work

The purpose of the project is to explore, by means of drifting, crosscutting and diamond drilling, for ores of lead and zinc. The proposed work is partly shown on the attached map entitled "Figure 8, Geologic Map of the 2005 level showing Recommended Exploration, Mayflower Mine."

The total project consists of the following units.

1. Water disposal facilities.

In order to accomodate a flow of water up to 5,000 gallons per minute, which includes 2,000 gallons additional mine waters expected to be encountered in this program, it will be necessary to install 7,140 feet of sixteen inch transite pipe in the main haulage tunnel.

2. Pumps and pump column installation

Ten inch steel pump column will be installed from the new 2005 level to the 800 (drainage tunnel) level. Two 4-GT 350H.P. 1000 gallon capacity pumps will be installed on the 1630 level and two submersible pumps 1000 gallon capacity 175 H.P. on the 2005 level, including necessary switches and controls and mountings.

3. Drifting and crosscutting

An estimated 6,000 feet of drifting and crosscutting will be done westerly on the 2005 level, with an additional estimated 2,600 feet of auxiliary crosscuts, 8,600 feet in all. The drifts and crosscuts

will be approximately 7 by 10 feet in rock section, after which the bottom two feet may be back filled. Drifts and crosscuts will be timbered as necessary using standard drift sets. A proper drainage ditch will be provided.

4. Ventilation Raises

Two timbered ventilation raises, at locations considered advisable, will be driven from the 2005 to the 1800 level, each approximately 125 feet in length. Raises will be approximately 6 by 10 feet in the clear of timber.

5. Water Doors

To guard against unforeseen heavy flooding, two steel and concret water doors will be installed on the 2005 level, at locations considered as favorable.

6. Longhole Percussion Drilling

To probe the walls of the crosscuts and drifts, an estimated 20,000 feet of long hole drilling will be done.

7. Diamond Drilling

One diamond drill hole of an estimated length of 1000 ft. will be drilled from a point near the westerly end of the 801-A drift, to probe for structure. Afterward an estimated total of ten thousand feet of diamond drilling will be done along the course of the new 2005 level, to probe for possible ore occurrences. Drilling will be done with AX size, or larger, coring bits, and hole locations, directions, inclinations and depths will be subject to prior Government approval.

Sludge samples will be taken as the drilling progresses and, when core recovery in significantly mineralized areas in less than seventy percent, the equivalent sludges will be sampledand sent for assay.

All significantly mineralized areas which may be encountered in drifting, crosscutting, long hole drilling and diamond drilling will be sampled and assayed for lead, zinc, copper, gold and silver, as seems desirable. It is estimated that 500 such samples will be required.

The Government will not participate in the cost of work done closer than one hundred feet to property boundaries.

Estimated Actual Costs

The Government will contribute to the cost of categories (2) through (7) as listed below; Provided, that the Government will not contribute to any portion of the cost of a work item that exceeds on an average the estimated unit costs for such items as follows:

Timbered raises, $48.00 per linear foot.

Longhole drilling, $1.00 per linear foot.

Drifting and crosscutting, $45.00 per linear foot.

Timbering of drifts and crosscuts, $11.00 per linear foot.

Category (1) Independent Contracts

11,000 feet diamond drilling, 95% core recovery guaranteed, @ $6.35/ft. (Includes all costs except compressed air and water)	$69,850.00

Category (2) Personal Services

(a) and (b) Supervision and technical 40 months, @ $650.00 monthly, (estimated number of technicians is waived)	$ 26,000.00	
(c) Labor	191,230.00	$217,230.00
Category (3) Operating Materials and Supplies		192,614.00

The Government's contribution to the cost of the following items may not exceed one half of fifty percent of the actual cost of such items. The Government will retain no salvage rights to such items upon conclusion of the contract.

1. Sixteen inch transite pipe and fittings.
2. Vent lines and fittings.
3. Compressed air lines and fittings.
4. Water lines and fittings.
5. Trank and fittings.
6. Steel pump column, valves and fittings.

Category (4) Operating Equipment

(a) and (b) Rental and purchases	None
(c) Depreciation, 60 month life	

Pumping

Power cable, 1,310 ft., 5,000 v. armored cable, @ $4.25/ft.	$ 5,567.50
2 4-OT, IR 350 H.P. pumps @ $7,777.62 each, 9-1/2-inch impeller	15,555.24
2 BJ, 12-inch"ZCKH 9 stage, 175 H.P. submersible pumps @ $8,121.00/each	16,240.00
Switches, controls for pumps @ $3,120.00/each	6,240.00
	43,604.74

Drifting and Crosscuttings:

1 Jumbo G. D. rail model J-2P	$ 6,465.00	
2 G. D. Cf - 93 P, drifting drills, complete	3,840.00	
1 G.D. Cf - 93 P, drifting drill, bare	1,465.00	
1 21 - C Eimco loader	4,720.00	
1 Canton car transfer	1,200.00	
10 50-cubic-foot mine cars @ $920.00 each	9,200.00	
1 charging panel	740.00	
2 4-ton, 50-cell motor batteries	6,500.00	
Power cable, ventilation #2 rubber, 3 conductor, @ $.78/foot	6,240.00	
Power cable, blasting and blowing #4, 3 conductor @ $0.39/ft.	3,315.00	
1 set 100 KVA transformer (used) 2300-440 volts	2,400.00	
1 25-H.P. fans @ $560.00 each	2,800.00	
	48,885.00	

Drilling, Long Hole:

2 long-hole machines, complete	2,930.00	~~$ 95,419.74~~
Total machinery	95,419.74	
$1590.00* monthly, 30 months		$ 47,700.00*

Category (5) Initial Rehabilitation and Repairs

(Exclusive of mine workings) None

Category (6) New Building, afixtures and Installations

(Exclusive of mine workings) None

Category (7) Miscellaneous

Fringe benefits, 11.5%; (workmen's compensation, F.I.CA., Federal and State unemployment, Group Insurance	24,986.00	
Assaying, (500 samples, 5 determinations each), 2,500 determinations @ $1.00/each	2,500.00	
Accounting, 40 months @ $25.00 monthly	10,000.00	37,486.00
Total estimated cost of the project		$564,880.00
Government's participation 50%		$282,440.00

* Denotes allowable maximum

DMEA Form (12-54)

OFFICIAL FILE COPY

Date	Surname	Code

June 10, 1958

Memorandum for the Docket

From: Director, Division of Base Metals

Subject: Justification for Docket No. DMEA-4981, New Park Mining Company, Mayflower Mine, Wasatch County, Utah, Lead, Zinc, Copper, Gold, and Silver

In establishing allowable maximums for the cited project we have calculated as follows:

RAISING:

The Field Team estimates a 125 feet raise at $6,569.82. Taking 50% salvage on vent line, air line, water line we have $6,314.82 or 50.51 per foot. Deduct $2.07 allowed depreciation per ft. (all depreciation is covered under 30 months of drifting) we have $48.44 per ft. Round to $48.00.

Timbering allowance in drifting and crosscutting arbitrarily set @ $11.00 per ft. same as Hecla - DMEA-3406.

Long hole drilling at $1.00 per ft. is in line with common practice.

Drifting allowable is derived as follows:

Labor, less supervision, is given as 210,356. This is on a base of 4 ft. advance per shift. Since the advance should be at least 5 ft. per shift we may decrease labor as follows:

210,356. x 80% = $168,284.80.

In line with other projects of a generally similar nature, we are allowing $650.00 monthly for supervision. For the estimated 30 months this would be $19,500.00

Depreciation for 30 months is 30 X 1590 or $47,700.00

The Operating Materials and Supplies account is given as 207,370.20, but includes a lump sum of 47,988. for power, @ $5.58 per ft. Two thirds of such sum would be more logical, or $31,992.00 It is not likely that heavy water flows would be encountered until the late stage of the project. We must also reduce this account by only allowing half cost for vent line, pipe and track, which makes a further deduction of $34,744.00. Since timbering is paid for seprately we shall also deduct the listed timber cost, of $13,519. in arriving at a base. Hence, for materials and supplies we have $143,111.00.

We should allow $250. monthly for accoutning, or 30 X 250.00 equals $7,500.00.

Hence, our logical base for drifting and crosscutting is estimated as:

Labor	$168,285.00
Supervision	19,500.00
Depreciation	47,700.00
Materials & Supplies	143,111.00
Accounting	7,500.00
	$386,096.00

$386,096. divided by 8600 ft equals $44.89 per ft. Round to $45.00.

W. R. Griswold

W. R. Griswold

IN REPLY REFER TO:

OFFICIAL FILE COPY
DMEA
RECEIVED JUN 10 1958

DATE		CODE
6/10	H.g.	225
		500

UNITED STATES
DEPARTMENT OF THE INTERIOR
GEOLOGICAL SURVEY
WASHINGTON 25, D. C.

June 9, 1958
Re: DMEA 4981
New Park Mining Co.
Mayflower Mine
Wasatch County, Utah
Lead-Zinc-Copper-Gold-Silver
Appl. Est. $719,566.67
Rec'd Est. $730,484.10

Memorandum

To: W. R. Griswold, Defense Minerals Exploration Administration

From: N. E. Nelson, U. S. Geological Survey

Subject: Review of Field Team Report

The applicant requested assistance in exploring the westerly extension of the Mayflower-Pearl fault-fissure structures in carbonate rock strata subjacent to a mass of quartz-diorite porphyry and abutting a mass of monzonite porphyry. The proposed work consists of rehabilitation, drifting and crosscutting 2,845 feet, shaft sinking 940 feet, shaft pockets and stations, and diamond drilling. The proposed work would be of an exploratory nature with a direct approach to the area to be investigated.

The examiners have proposed an alternate program consisting of the rehabilitation of a large part of the mine drainage system, extensive development work on the bottom mine level--probably in ore, exploratory drifting and crossuctting, raising, diamond and long hole drilling.

The same structures were investigated under contract Idm-E5, DMA 107. Much fruitless drifting and crosscutting were done in diorite on the 800 or Mayflower Tunnel level. The work did, however, tend to establish the continuity of important fault structures which, where traversing favorable rocks, contain ore. The proposed lateral work is intended to explore the same structures in the Deseret, and Madison limestones and possibly in the Jefferson dolomite. Down diamond drilling from the new level will test the Maxfield limestone and the Ophir shale, all favorably regarded formations.

Inasmuch as some known ore overlying parts of the easterly 2,400 feet of the proposed new 2,005 drift from the shaft will be made available, some of the Government's contribution may be repaid. Perhaps these payments will compensate for the ostensible operating benefits the mine will derive from the rehabilitation work, pumping facilities, development, ventilation, raises, etc. The work outlined in the application lacked even that promise.

I concur with the recommendation of the examiners and the Field Team.

T. H. Kiilsgaard

T. H. Kiilsgaard

for: N. E. Nelson

NEW PARK MINING COMPANY

KEETLEY, UTAH

SALT LAKE CITY OFFICE
904 WALKER BANK BUILDING

OFFICIAL FILE COPY
DMEA
RECEIVED JUN 2 1958

DATE	INITIALS	CODE
6/2	C	220
4	Copy	100
6/3	WKS	500

May 29, 1958

Mr. C. O. Mittendorf, Administrator
Defense Minerals Exploration Administration
Washington 25, D. C.

Re: Docket No. DMEA 4981

Dear Mr. Mittendorf:

It is my understanding that the Field Team's investigation of the above referenced Docket No. has been completed and has been transmitted to your office in Washington, D. C.

We certainly appreciate the consideration of the Field Team and the speed with which their investigation has been completed.

I plan to arrive in Washington, Monday night, June 2, and will be staying at the Jefferson Hotel. I will have with me our cost data and map files will be available for any consultation that might be helpful Wednesday morning or later in the week. I will contact you by 'phone upon my arrival to determine your schedule on this contract.

With best wishes, I am,

Very truly yours,

Clark L. Wilson

CLARK L. WILSON,
Vice President

CLW:ih

UNITED STATES
DEPARTMENT OF THE INTERIOR
DEFENSE MINERALS EXPLORATION ADMINISTRATION
224 New Customhouse
Denver 2, Colorado
May 28, 1958

AIR MAIL-SPECIAL DELIVERY

To: Secretary to the Operating Committee, DMEA

From: DMEA Field Team, Region III

Subject: Docket No. DMEA 4981 (Copper-Lead-Zinc), New Park Mining Company (Mayflower mine), Wasatch County, Utah - Joint Report of Examination

Under separate cover, by air parcel post, special delivery, we are forwarding the original and two copies of the Joint Report of Examination on the subject property by M. H. Howes, U.S.B.M., and F. B. Moore, U.S.G.S.

The field examiners conclude that the probability for making a significant discovery is sufficiently promising to justify Government participation. Accordingly, they recommend that the Applicant's work proposal be approved, as modified by them, in which the Field Team concurs.

Considering current conditions which affect disposal of mining equipment and related nonexpendable material, and because in the past liquidation of the Government's interest in such has been at a rate as low as 12 percent of amounts originally contributed toward their purchase (Idm-E237), it is recommended that the costs of nonexpendable items of "Operating Material and Supplies" be reduced by the Government's interest in the estimated salvage value in order to eliminate complicated and time-consuming procedures of property liquidation upon completion of the project. Recommended basis of reduction is as follows:

Unit No. 1 (Main haulage drift rehabilitation)
(7140 feet at estimated cost of $49,562.85 = $6.94/ft.)
(c) Page 20, First two items - $25,990.00
Government's interest in estimated salvage value (50% of 50% of cost) - $ 6,497.50 = $0.91/ft.

Unit No. 2 (Ventilation raise 125 feet at $52.86/ft.)
(c) Page 21, First three items - $510.00
Government's interest in estimated salvage value (50% of 50% of cost) - $ 127.50 = $1.02/ft.

Reviewed by
DMEA OPERATING COMMITTEE
6-4-58
(date)

Unit No. 3 (Pump installation - job $18,532.39)

(c) Pages 22-23, All three items - $13,626.00
Government's interest in estimated salvage value (50% of 50% of cost) - $ 3,406.50 = job reduction

Unit No. 4 (Drifting and crosscutting 8,600 feet at $58.01/ft.)

(c) Page 24, First five items - $69,589.00
Government's interest in estimated salvage value (50% of 50% of cost) - $17,397.25 = $2.02/ft.

Unit No. 5 (Ventilation raise 125 feet at $52.86/ft.)

(Same as for "Unit No. 2") - $ 127.50 = $1.02/ft.

Units Nos. 6, 7, and 8

Little or no property of salvageable value involved.

Total reduction $27,556.25

If costs are reduced for the purpose of eliminating liquidation procedures, appropriate recitation should be incorporated in the contract waiving the Government's interest in the remaining costs of the "Operating Material and Supplies."

Two copies each of drill bids submitted by R. S. McClintock, Longyear, and Boyles Bros. Drilling Company are included in the package sent by air parcel post.

Seven copies each of "Figure 8" and "Figure 10" are also included in the package for use in the contract.

J. W. Townsend

E. N. Harshman

OFFICE COPY
DMEA
RECEIVED 29 19
DATE
6/4 HB 130
INTERMOUNTAIN
EXPERIMENT STATION
220

DMEA
DEPARTMENT OF THE INTERIOR
MAY 28 1958
REGION III
DENVER, COLORADO

UNITED STATES
DEPARTMENT OF THE INTERIOR
BUREAU OF MINES
REGION III

1600 EAST 1ST SOUTH STREET
SALT LAKE CITY, UTAH

May 27, 1958

Memorandum

To: E. N. Harshman, Acting Executive Officer, DMEA Field Team, Region III

From: M. H. Howes

Subject: Docket No. DMEA-4981 (Copper-Lead-Zinc), New Park Mining Co. (Mayflower mine), Wasatch County, Utah

Attached are 10 copies of the engineering and geologic report for the subject docket by M. H. Howes, Bureau of Mines, and F. B. Moore, Geological Survey, 11 prints each of figures 1 and 2, and the routing control sheet.

Also attached are bids from three diamond-drilling contractors. Since the bids were received by this office after the above report was completed, the estimated drilling costs of the report will not be revised. The applicant submitted the following notes for overall costs according to the three bids from R. S. McClintock Diamond Drill Co., E. J. Longyear Co., and Boyles Brothers Drilling Co.:

"In the McClintock bid, I have used BX prices on the down-hole as this will be AX wire line. The up-holes are figured AX all of the way. The flat holes have been figured on a 50/50 basis AX and BX. You will note a 10% estimate of drilling costs for reaming, casing, cementing, delays, core boxes, etc. The Longyear estimate is figured on a similar basis except for the flat holes where I have used BX prices for the first 250 feet and the remainder AX. Again I have used an estimated 10% for miscellaneous costs. On the Boyles bid, we are interested in the 95% recovery, so I have used the top prices. It would look like the drilling will cost in the neighborhood of $70,000.

"R. S. McClintock

Down-holes

2 at 1,000 feet and 2 at 750 feet ±	3,500 feet
2,000 feet BX - 0 feet to 500 feet at $5.95	$11,900
1,500 feet BX - 500 feet to 1,000 feet at $6.95	10,425
	$22,325

Reviewed by
DMEA OPERATING COMMITTEE
6-4-58
(date)

Up-holes

2 at 800 feet	1,600 feet
1,000 feet AX - 0 feet to 500 feet at $5.65	$5,650
600 feet AX - 500 feet to 1,000 feet at $6.65	3,990
	$9,640

Flat-holes

10 at 600 feet = 6,000 feet (Est. 50/50 AX and BX)	
10 at 300 feet BX - 0 feet to 500 feet at $5.95	$17,850
10 at 200 feet AX - 0 feet to 500 feet at $5.65	11,300
10 at 100 feet AX - 500 feet to 1,000 feet at $6.65	6,650
	$35,800

Total drilling ----------	$67,765
Est. 10% of drill cost ----------	6,776
Total cost ----------	$74,541

"E. J. Longyear

Down-holes

2,000 feet) 1,500 feet)	3,500 feet BX at $5.30	$18,550

Up-holes

2 at 800 feet	1,600 feet
2 at 250 feet AX - 0 feet to 250 feet at $7.25	$ 3,625
2 at 250 feet AX - 250 feet to 500 feet at $8.25	4,125
2 at 250 feet AX - 500 feet to 750 feet at $9.50	4,750
2 at 50 feet AX - 750 feet to 1,000 feet at $11.25	1,125
	$13,625

Flat-holes

10 at 600 feet	6,000 feet
10 at 250 feet BX - 0 feet to 250 feet at $6.60	$16,500
10 at 250 feet AX - 250 feet to 500 feet at $7.15	17,875
10 at 100 feet AX - 500 feet to 750 feet at $8.25	8,250
	$42,625
Total drilling	$74,800
Est. 10% of drill cost	7,480
Total cost	$82,280

"Boyles Brothers

11,000 feet drilling with 95% recovery at $6.35	$69,850."

M. H. Howes

M. H. Howes

Enclosures
cc: J. B. Clemmer

R. S. McClintock DIAMOND DRILL COMPANY

CONTRACTING • DIAMOND DRILLS AND SUPPLIES • DIAMOND BITS

PHONE RI. 4197
W. 418 2ND AVE.
SPOKANE, WASH.

DMEA
DEPARTMENT OF THE INTERIOR
MAY 28 1958
REGION III
DENVER, COLORADO

OFFICIAL FILE COPY
DMEA
RECEIVED MAY 29 1958
DATE | INITIALS | CODE

May 24, 1958

Mr. Clark L. Wilson
New Park Mining Company
907 Walker Bank Building
Salt Lake City, Utah

Dear Mr. Wilson:

We understand you wish to diamond drill in excess of 10,000 feet of hole from two levels of the Mayflower Mine in which the holes are expected to bottom between 600 ft. and 1,000 ft. in depth. We further understand you will furnish adequate air and drill water to the set-ups which will be of sufficient size to allow a 20 foot pull and that you will furnish transportation for the drill crew, equipment and supplies.

We propose to furnish the drill rig, rods, casing, drill labor, diamond bits, core barrels and all drilling accessories for the following prices per foot:

NX Collarpipe	0' to 25'	@ $6.50 per foot
BX size	0' to 500'	@ 5.95 per foot
AX size	0' to 500'	@ 5.65 per foot
BX size	500' to 1000'	@ 6.95 per foot
AX size	500' to 1000'	@ 6.65 per foot

In the event loose or caving ground or water courses are encountered which makes drilling impractical without the use of cement or casing, we will cement and redrill the cemented portion of the hole or ream, place and seat casing for the following prices per foot:

Cement or ream	0' to 500'	@ $2.50 per foot
	500' to 1000'	@ 3.00 per foot

We will furnish cardboard core boxes at our cost with overhead at the rate of 12½% but with no profit to us.

In case of delay time for the convenience of your company and not due to fault of contractor or breakdown of contractor's equipment, we will

expect to receive the sum of $8.50 per hour while the drill crew remain on shift.

Our employees will be covered by Industrial Insurance and the contract will be covered by Public Liability Insurance in the amount of $100,000/$300,000, and Property Damage in the amount of $100,000.

We thank you for the opportunity of quoting and appreciate the courtesies shown us by Mr. Hansen, while out to the mine.

Very truly yours,

R. S. McClintock Company

By _____
M. B. Weaver

cc: Mr. Philip H. Irwin
Spokane, Washington

Diamond Core Drilling
Mining
Quarries
Shaft Sinking
Tunnel Driving

Boyles Bros. DRILLING COMPANY

CONTRACTORS · ENGINEERS · GEOLOGISTS
General Offices
1321 South Main Street Phone HUnter 4-4401
SALT LAKE CITY 15, UTAH

DMEA
DEPARTMENT OF THE INTERIOR
MAY 28 1958
REGION III
DENVER, COLORADO

Reply to: S. L. C.

May 22, 1958

Mr. Clark Wilson
New Park Mining Co.
904 Walker Bank Building
Salt Lake City, Utah

Dear Mr. Wilson:

With reference to your request for bids for drilling to be done in the Mayflower Tunnel and other drilling to be done on the 2,000 foot level, we submit the following rates to insure the maximum core recovery.

1. Drilling rates 0 - 1,000 feet - $4.75 per foot for each foot drilled plus the following bonus for core recovered:

70% - 80%	$ .60 per foot.
80% - 90%	.90 per foot.
90% - 95%	1.20 per foot. +4.75 = 5.95
Over 95%	1.60 per foot.

4.75
1.60
6.35

2. Drill stations of adequate size to be supplied at no cost to Boyles Bros.

3. Air and water to be supplied to all drill stations at no cost to Boyles Bros.

The foregoing rates are bid with the understanding that all holes will be drilled AX size or larger and we will use our wireline equipment wherever possible.

Thank you for calling on us and we would appreciate hearing from you as soon as possible as to the disposition of this work that we may more adequately serve you.

Very truly yours

P. A. Park

P. A. Park
Assistant Manager, Drilling Division

PAP:bg

Longyear

E. J. LONGYEAR COMPANY
General Offices, 76 South 8th St.
Minneapolis 2, Minnesota, U. S. A.
TELEPHONE: FEDERAL 9-7631 • CABLE LONGCO

May 21, 1958

DMEA
DEPARTMENT OF THE INTERIOR
MAY 28 1958
REGION III
DENVER, COLORADO

New Park Mining Company
907 Walker Bank Building
Salt Lake City, Utah

Attention: Mr. Clark Wilson, Vice President

UNDERGROUND EXPLORATORY DRILLING PROGRAM - VICINITY OF PARK CITY, UTAH

Gentlemen:

1. Referring to your recent conversation with our Mr. Jack Miller, we are pleased to submit below proposal for your contemplated exploratory drilling program which is to be carried out in one of your underground mines located in the above-mentioned district.

2. We understand that the program as now planned will consist of a minimum of 8000 feet, to a maximum of 10,000 feet of drilling, in holes varying in inclination from a plus 45 degrees to a minus 90 degrees, and ranging up to a maximum of 800 feet in depth; that the formations to be penetrated will consist of Deseret limestone, Madison limestone, Jefferson dolomite, Maxfield limestone, Ophir shale, in varying amounts, and a minor quantity of diorite. We further understand that a minimum of AX-size core is desired.

3. For this work we propose to furnish one complete Longyear underground diamond core drill of suitable capacity, together with the necessary accessory equipment, including the most modern type of coring tools, required to complete the work as now planned. We further propose to operate the drill on a two shift basis, six days per week.

4. We will carry public liability insurance covering personal injury and property damage, and Workmen's Compensation insurance, and also, all-risk insurance on the drilling equipment protecting against loss by theft, fire, flood, land-slides and other similar hazards.

We will also assume and pay any and all Old Age Benefit, Unemployment and Social Security taxes and contributions imposed by federal or state authorities.

Certificates showing the coverage referred to will be furnished upon request.

5. Based upon the conditions as outlined above, we are pleased to quote as follows:

a) Diamond Core Drilling

1) In vertical or angle holes, with minimum inclination of 60° (measured from the horizontal) -

	BX-size	BXWL and/ or AX Std.
0 to 500 feet in depth.....	$5.30/ft.	$ 5.00/ft.
500 to 1000 feet in depth.....	$	$ 5.30/ft.

2) In horizontal holes -

0 to 250 feet in depth.....	$6.60/ft.	$ 6.30/ft.
250 to 500 feet in depth.....	$7.45/ft.	$ 7.15/ft.
500 to 750 feet in depth.....	$	$ 8.25/ft.
750 to 1000 feet in depth		$ 9.50/ft.

3) In angle holes varying in inclination from a plus 35 degrees to plus 45 degrees (measured from the horizontal --

0 to 250 feet in depth.....	$7.55/ft.	$ 7.25/ft.
250 to 500 feet in depth.....	$	$ 8.25/ft.
500 to 750 feet in depth.....		$ 9.50/ft.
750 to 1000 feet in depth.....		$11.25/ft.

b) Reaming and Casing

1) In minus 90° or angle holes with minimum inclination of 60° (measured from the horizontal) --

0 to 500 feet in depth -

Ream AX-size hole to receive AX casing..$2.00 per ft.
Ream BX-size hole to receive BX casing..$2.50 per ft.

500 to 1000 feet in depth -

Ream AX-size hole to receive AX casing..$2.50 per ft.

2) In horizontal or angle holes ranging up to a plus 45° in inclination (measured from the horizontal)

0 to 500 feet in depth -

AX-size hole to receive AX casing.....$2.75 per ft.
BX-size hole to receive BX casing.....$3.25 per ft.

500 to 1000 feet in depth -

AX to receive AX casing.....$3.50 per ft.

In addition to the above tabulated rates, it is understood and agreed that we would be paid in full for any casing lost or left in holes at your request.

c) Cementing, waiting for cement to set, and drilling out cement.....$8.50 per hour, per two man crew, plus cost of materials used.

d) Drill hole inclination tests.....$8.50 per hour with two man crew.

e) Delays for your convenience or for which you are responsible.....$7.50 per hour, with two man crew

f) Moving Allowance - In the event that a total of more than three shifts is consumed in completing moving and rigging operations at any given location, it is understood and agreed that we would be reimbursed for all such excess time at the rate of $3.75 per man hour.

6. The above-quoted drilling rates are based on wages currently being paid in the State of Utah. If during the life of this project it becomes necessary for us to adjust the wages being paid our workmen because of demands of labor union or otherwise, it is understood and agreed that the Longyear Company reserves the right to increase drilling rates to cover resultant additional operating expenses.

7. OTHER PROVISIONS - It is understood and agreed that adequate underground drill stations will be prepared by you from which diamond core drilling operations can be carried out in an efficient and workmanlike manner; and that you will also furnish at each drill hole location, electric power, and air and water in sufficient quantities and pressures so as to permit the drilling operations to be carried out efficiently.

8. Drill cores will be turned over to your representative at the drill stations in receptacles furnished by you.

9. Statements will be rendered as promptly as possible after the first of each month.

10. We appreciate very much the opportunity to consider this project. If our proposal is found acceptable, we would be prepared to commence the work within a maximum of 15 days after receipt of official notice to proceed.

Sincerely,

E. J. LONGYEAR COMPANY

M. J. Gleason

M.J.Gleason:bal

Manager, Contract Drilling Division

ACCEPTED:

NEW PARK MINING COMPANY

By:_____

Date:_____

DMEA
DEPARTMENT OF THE INTERIOR
MAY 28 1958
REGION III
DENVER, COLORADO

NEW PARK MINING CO.
MAYFLOWER MINE
WASATCH COUNTY, UTAH
DMEA-4981
Copper-Lead-Zinc

ORIGINAL FILE COPY
DMEA
RECEIVED MAY 29 19
614 HB 130
220

ON-SITE Report

Engineering and Geologic Report

By M. H. Howes
Bureau of Mines

and

F. B. Moore
Geological Survey

May 26, 1958

Reviewed by
DMEA OPERATING COMMITTEE
6-4-58
(Date)

NEW PARK MINING CO.
MAYFLOWER MINE
WASATCH COUNTY, UTAH

CONTENTS

	Page
Engineering and geologic report	
Introduction	2
Location and physical features	3
History and production	3
Ownership and extent	4
Geology	6
Ore deposits	8
Potential of the Mayflower mine	11
Facilities	13
Project proposals	13
Estimated costs of project proposals	19
Proposed financing	34
Conclusions and recommendations	34
Appendix I - Paleozoic rocks of the Park City and Cottonwood districts	35

ILLUSTRATIONS

Fig. 1. Location map, New Park Mining Co., Wasatch County, Utah
Fig. 2. Property map
Fig. 3. Index map of major Park City, Utah, ore bodies
Fig. 4. Geologic map of surface
Fig. 5. Geologic map of Star-Galena level
Fig. 6. Geologic map of 800 level
Fig. 7. Geologic map of 1630 level
Fig. 8. Geologic map of 2005 level, showing recommended exploration
Fig. 9. Stratigraphic section, 800 level to 1755 level
Fig. 10. Longitudinal section along Mayflower-Pearl fissure system
Fig. 11. Cross section F of Mayflower-Pearl fissure system
Fig. 12. Cross section G of Mayflower-Pearl fissure system

INTRODUCTION

An application, dated April 7, 1958, for Government aid in an exploratory project, was submitted by New Park Mining Co. The proposed program includes: rehabilitation of the main haulage-level ditch and installation of 16-inch water pipe to accommodate additional mine waters expected to be encountered in this exploration; rehabilitation of the 801-A drift; 240 feet of drifting to the proposed 800-level shaft station, raise, and pocket; construction of the 800-level shaft station, shaft raise, and pocket raise; 940 feet of shaft sinking; construction of the 1630-level shaft station, pocket, and water sump; 2,605 feet of drifting and crosscutting on the 1630 level; and 6,670 feet of diamond drilling to explore the sedimentary formations underlying the Pennsylvanian Weber quartzite for copper-lead-zinc ores in the west mineralized fissure zone of the Mayflower mine. The total estimated cost of the program is $719,566.69.

The property was examined April 22, 23, and 24, 1958, by M. D. Crittenden and F. B. Moore, Geological Survey, and M. H. Howes, Bureau of Mines, to determine the merits of the proposed project and to appraise the engineering feasibility and estimated costs of the job. The field examiners were accompanied by Clark L. Wilson, Gale A. Hansen, and Walter Bauer, representatives of the company.

It is agreed that the objective area for the proposed project is favorable. However, the field examiners believe the exploratory value of the program can be greatly increased by drifting to the objective area through the Mayflower ore zone and parallel to the Mayflower and

Pearl fissures within the favorable sedimentary beds from the 2005 level of the present Mayflower shaft (fig. 8), rather than to sink directly into the objective area from the westerly end of the Mayflower Tunnel. The applicant concurs with this idea and agrees to the alternate proposed program as set forth in this report.

LOCATION AND PHYSICAL FEATURES

The Mayflower mine of New Park Mining Co. (figs. 1, 2, and 3) is situated at the junction of the Uinta and Wasatch Ranges in an area of considerable warping and faulting of the beds. The property lies in the southeastern part of the Park City district in section 24, T. 2 S., R. 4 E., S.L.B. and M., Wasatch County, Utah. Altitudes range from approximately 6,000 feet to over 9,000 feet.

The mine is approximately 40 miles east of Salt Lake City, Utah, and 3 miles west of Keetley, Utah, on U. S. Highway 40.

HISTORY AND PRODUCTION

The property of the New Park Mining Co. is now named the Mayflower mine, but in the past was called the Glencoe, Glen Allen, Star of Utah, and Park Galena.

To date the Mayflower mine has produced 1,250,000 tons of ores having a total value of $32,000,000. This production includes 17,346,000 pounds of copper, 134,021,000 pounds of lead, and 173,108,000 pounds of zinc. The present production is approximately 3,500 tons per month, which has been reduced from 5,500 tons because of the current low market prices.

The ore reserves of the Mayflower mine are reported to be 132,000 tons of ores having the following average assay: 4.2 percent lead, 0.9 percent copper, 6.7 percent zinc, and 0.39 ounces of gold and 6.4 ounces of silver per ton.

During the past 80 years, the Park City district has produced more than $450 million in nonferrous metals.

OWNERSHIP AND EXTENT

New Park Mining Co. is incorporated under the laws of Nevada. The address of the home office is:

907 Walker Bank Building, Salt Lake City 11, Utah.

Officers of the company are:

W. H. H. Cranmer, President and General Manager

Clark L. Wilson, Vice President and Manager of Operations

Robert L. Cranmer, Secretary

Raymond C. Wilson, Treasurer.

The property (fig. 2) to be included for the proposed project, which will be subject to the Government lien for royalty payments, is owned by the applicant or leased from the United States Smelting, Refining and Mining Co., and is listed as follows:

Patented lode-mining claims owned by New Park Mining Co.

Miriam No. 1	Mineral	Survey	No.	206
Miriam No. 2	"	"	"	206
Fisher No. 1	"	"	"	6980
*Sitka (1/3 int.)	"	"	"	7126
W. H. C.	"	"	"	200
Ammie	"	"	"	202
Sun Set No. 2	"	"	"	168
Glencoe	"	"	"	98
Sofia	"	"	"	99
Mazzeppa	"	"	"	169
Rising Star	"	"	"	170
Estella	"	"	"	167
Success No. 1	"	"	"	6810
Crescent	"	"	"	5087
Phyllis	"	"	"	6810
Mary Jane	"	"	"	6810
North Side No. 3	"	"	"	100

Patented lode-mining claims leased from United States Smelting, Refining and Mining Co.

Lookout Mountain	Mineral	Survey	No.	7130
Lookout Mountain No. 2	"	"	"	7130
Ben Butler	"	"	"	6642
Dew Drop	"	"	"	7130
Ethel	"	"	"	7130
Hornet	"	"	"	7130

Unpatented lode-mining claims leased from United States Smelting, Refining and Mining Co.

Patents not completed

Link	Mineral	Survey	No.	7130
Marne	"	"	"	7130
*Martha	"	"	"	7130

*Jointly owned by New Park Mining Co. and United States Smelting, Refining and Mining Co. New Park Mining Co. has a lease on United States Smelting, Refining and Mining Co.'s interest.

"The area subject to lien will be further limited to the block of ground below the 1880 level from the east boundary of the DMEA property to a plane, approximately 2,120 feet S. 65° W. of the Mayflower shaft, described as follows:

> A vertical plane striking N. 25° W., through mine survey coordinate point 7570 North 7400 East, which bears S. 65° W., 325.0 feet from survey station 5539 on the 1630 west level.

There will be no vertical limits on the property southwest of the above-described plane." The upper limit of the block in the Mayflower ore zone was chosen at the bottom of the 1880 level for operational reasons. Original discussions indicated that the upper limit of the block would be placed between the 1755 and 1880 levels. It would be extremely difficult to determine the location of an upper limit between levels during stoping operations, especially when the mining progresses at irregular intervals.

New Park Mining Co. owns and leases several thousand acres of mining property in addition to the adjoining exploratory area.

GEOLOGY

The sedimentary rocks in the Mayflower mine area range in age from Cambrian to Pennsylvanian. Throughout most of its 80-year history, the older part of the Park City district has produced almost exclusively from horizons above the Pennsylvanian Weber quartzite. During the last 10 years sufficient workings have been extended below the Weber quartzite to demonstrate that the stratigraphy of the adjoining Cottonwood-American Fork area can be recognized in the Park City district. In the stratigraphic

section, formations below the Deseret limestone can be expected at Park City by projection from the adjoining area. The sedimentary rocks above the Weber, which include the favorable Park City and Thaynes formations, have been removed by erosion in the Mayflower mine area. (Appendix I).

Since 1950, there has been intensified effort throughout the eastern part of the Park City district to establish the stratigraphy below the Weber quartzite. Work on several DMEA projects has contributed information in this and adjoining properties. The Morgan and Doughnut formations were penetrated during rehabilitation of the Star Tunnel (DMA 1094X). The Doughnut formation and its basal shale member were cut during work in the Park Heber project (DMEA 2300). Westward extension of the Mayflower mine 800 level by New Park (DMA 107) exposed the uppermost beds of the Humbug formation. Continued recent development of the lower levels of the Mayflower mine has penetrated the full thickness of the Humbug formation and much of the underlying Deseret limestone. As far as known, this is the deepest horizon yet penetrated in the district.

A series of dioritic and monzonitic bodies of Eocene to Miocene age have intruded the sediments in the area of the Mayflower mine. The intrusive rocks occur as stocks, sills or sill-like bodies, and dikes.

The sedimentary rocks are folded into a broad anticline whose gently north-plunging axis lies to the east of Park City. The Mayflower mine is on the east flank, where dips are 15° to 30° easterly.

A series of east-northeast- to northeast-trending faults cut the area and appear to extend for strike distances of 5,000 feet or more. In general, these faults are steeply dipping and have a normal movement. Displacement of the beds is 100 feet or less for the most part.

Two faults, the Mayflower and the Pearl, which are in part the targets of the proposed exploration, are considered together as a fault system in this report. The two faults are approximately parallel in strike and 400 to 500 feet apart. The Mayflower and possibly the Pearl are composed of a series of en echelon segments. Both faults split into various strands, some of which are interconnecting; both are strong structures as much as drift width in many places.

Several thrust faults, believed to be local in extent, have been mapped on the surface southwest of the mine area.

ORE DEPOSITS

The ore deposits are both lode and limited replacement types associated with the Mayflower, Pearl, and subsidiary fissures. In the upper parts of the Mayflower ore shoot, where the wall rock is diorite, the ore occurs as fissure filling. In the underlying limestones the ore occurs both as fissure filling and as bedded replacement between strands of the fissures. In the present workings the bedded ore appears to be limited to distances of a few tens of feet from known fissures. Most of the production of the mine until recently has come from the lode-type deposits; current production is largely from the replacement-type deposits.

Mineralogically, the ore can be divided into two types. The Mayflower type consists chiefly of galena and sphalerite and minor amounts of copper sulfides. The Pearl type contains enargite, chalcopyrite, and minor amounts of sphalerite, galena, chalcocite, and bornite. At depth where the Mayflower and Pearl fissures approach each other, both types of ore may be present in the same vein but, in a given area, one type may predominate almost to the exclusion of the other.

The Mayflower ore shoot has been mined for about 1,800 feet vertically and for over 1,000 feet horizontally. The shoot is controlled primarily by the Mayflower fissure. A dark, fine-grained diorite, called the D-1, is a favorable host rock. Where the fissure enters other diorites, notably a large mass of lighter colored quartz diorite porphyry, called the D-4, mineralization is weak. However, the operators believe that the unfavorable diorites may serve as dams for localization of ore bodies in favorable beds above or below. This is suggested by apophyses of ore above and below a tongue of D-4 quartz diorite porphyry on the 800 and 1270 levels (fig. 10). The possibility that the Mayflower ore shoot was controlled by a change in strike to more nearly east, combined with the known right lateral movement, could not be verified by any consistent pattern among other shoots in the mine.

A second control for ore is, of course, the favorable limestone beds. The Doughnut, Humbug, and Deseret formations are shown to be favorable for ore deposition by exploration recently accomplished. The unexplored part of the section below the present mine workings includes several formations that contain bedded ore deposits in nearby

districts. These are: (1) the Jefferson dolomite which produced bonanza silver ores in the Emma mine; (2) a horizon about 200 feet above the base of the Maxfield limestone, which contained ore in the Miller and Michigan-Utah mines; and (3) the Ophir limestone which contained ore in the Columbus Consolidated and Alta Consolidated mines. The Ophir formation, being the lowest bed of carbonate throughout western Utah and Nevada, has been of greatest importance in the Ophir district, Tooele County, Utah. Formations above the Ophir formation have yielded a large part of the production in the Cottonwood-American Fork district.

In the Mayflower mine the grade of the ore is improving with increasing depth. Over-all grade of the ore produced in 1956 and 1957, as given by the operator, is as follows:

	Ounces per ton		Percent		
Year	Au	Ag	Cu	Pb	Zn
1956	0.24	3.81	0.87	4.44	5.98
1957	0.17	3.87	1.10	5.45	7.65

The improvement in grade is believed to be related to a change in rock type rather than to any depth factor. In 1957 a larger proportion of the ore came from the limestones underlying the D-1 diorite than in 1956. It is the operator's opinion that the Mayflower ore is of better grade in the limestone than in the diorite.

POTENTIAL OF THE MAYFLOWER MINE

The potential of the Mayflower mine in regard to future ore production is large. The three beds (Doughnut, Humbug, and Deseret), which only recently have been found to be favorable, are but partly explored. Good-grade ore is in sight in numerous places and in sizeable quantities on the 1755 level, and it is probable that the ore will continue in depth. The formations below those already explored--Madison, Jefferson, Maxfield, and Ophir--have been good ore horizons in the adjoining Cottonwood and other districts in Utah. Historically, at least, these four formations have a potential considerably greater than that of the formations already exposed in the mined.

Several unknown factors may affect the stratigraphic section below the levels now exposed. The first is the effect of two small thrust faults that were recognized in the area southeast of the Mayflower mine. These are abnormal in character and have resulted in thinning rather than thickening the section. The uppermost brought Weber quartzite over the Madison limestones and the lower one brought Madison over the Tintic quartzite or Precambrian. Both faults dip north and east toward the area of exploration. The work to date has shown, however, that the effects of the upper fault which, at the surface, but out the section between the Weber and the Madison, have almost entirely disappeared in the Mayflower mine area. It is possible, of course, that some of the falt faults associated with the ore bodies now being mined in the Mayflower may be a downward extension of the upper fault. It should be noted that some of the largest ore bodies in the Alta area (west of the

Mayflower mine) were developed on similar thrusts and that their presence may actually enhance the prospects for favorable ground preparation.

A second factor is the uncertainty concerning the extent of erosion on the unconformity at the top of the Cambrian Maxfield limestone. Its effect is to vary the thickness of the Maxfield formation from place to place. The maximum thickness known is about 1,000 feet, near Alta; in a few places it has been removed entirely. Recent surface work by the company indicates that part of the Maxfield is exposed on the surface in the area of the Valeo mine and, as a result, a thickness of about 500 feet has been assumed (fig. 12). The actual thickness can be determined only by further underground work.

The third factor which might distrub the stratigraphic section is the possible downward extension of the D-4 quartz diorite porphyry in the western target area. Workings in the ore shoot below the quartz diorite porphyry show that it is sill-like in character in this area. One drill hole from the westernmost workings of the 800 level encountered sediments at about 250 feet below the level, thus giving further evidence of a sill-like mass. However, it is possible that the quartz diorite porphyry body may become a plug to the west and lose its sill-like character. One drill hole from the 800 level is proposed to determine the lower limits of the quartz diorite porphyry.

FACILITIES

The west mineralized fissure zone, which is proposed to be explored by this project, has been partially investigated by the Star of Utah Tunnel level and the Mayflower Tunnel level. The Mayflower mine is served by the Mayflower Tunnel (800 level), 7,200 feet to the main operating shaft, and 4,000 feet beyond the shaft to the west face. The mine shaft extends from its collar on the 800 level to the lowest, or 2,000-foot level.

The mine is equipped with facilities necessary for production of 5,500 tons of ore per month, including mine office, change room, shops, assay office, dump, and railroad spur on the surface; and hoist, compressors, pumps, ventilation equipment, haulage equipment, drill machines, and small tools underground. All available facilities will be used as necessary in the proposed project.

PROJECT PROPOSALS

The following recommended exploration program at the Mayflower mine has been changed from the applicant's proposed program. The alternate program was discussed at length with Clark L. Wilson and his staff and is acceptable to the applicant. The principal change involves using the present Mayflower shaft and drifting southwesterly therefrom in lieu of sinking a new shaft to the west. In contrast to the requested program, which would explore two formations and one mineralized zone to a depth of 1,650 feet, the recommended program will explore three or possibly four formations and two mineralized zones to a depth of 2,000 feet. The revised program is estimated to cost $730,484.10, which is $10,917.41 more than the requested program.

Drifting and crosscutting on the 2005 level ---------- 8,600 feet

From the 2005 level, about 125 feet below the 1880 level of the Mayflower shaft, drift and/or crosscut southwesterly as shown on figures 8 and 10. The first 3,000 feet will test the downward extension of the Mayflower ore body; about 3,000 additional feet of drifting will be needed to explore the Mayflower-Pearl fissure system to the west. The "drift" will follow the Mayflower-Pearl fissure system, but because of complications of structure may, for considerable distances, be driven between strands of that system and, in essence, be a crosscut. An additional 2,600 feet should be allowed for lateral exploration.

Long-hole drilling on the 2005 level ---------- 20,000 feet

Will be used in conjunction with "drifting" to test for parallel structures and to provide data concerning splits and other pertinent geologic features.

Diamond drilling on the 800 level ---------- 1,000 feet

One hole about 1,000 feet long should be drilled at a downward angle from the 800 level to test the bottom of the D-4 quartz diorite porphyry and to gain stratigraphic information (fig. 10).

It is essential that this hole be drilled before drifting beyond 3,000 feet from the shaft on the 2005 level. The drill station should be located as far southwesterly on the 800 level as accessibility will permit.

Diamond drilling on the 2005 level ---------- 10,000 feet

Two holes totaling about 1,800 feet should be drilled downward from the 2005 level through the Ophir limestones to test the lower favorable horizons. The remaining footage will be used to supplement long-hole drilling, and drifting and crosscutting in testing for favorable mineralized areas along fissure structures.

Sampling ---------- 600 samples

Will be analyzed for gold, silver, copper, lead and zinc.

The proposed exploratory program, "The West Mayflower Project," has been planned as a separate unit of work from the present Mayflower mine operation. However, the project will require use of the Mayflower Tunnel or the present main haulage level of the Mayflower mine, the Mayflower shaft, the haulage facilities, hoisting, pumping, ventilation, power, electrical system, compressed air, and surface facilities. All costs have been calculated by the operator on a footage and project basis in conjunction with the present operation.

The following project schedule has been planned by the applicant in accordance with the alternate program proposed by the field examiners:

Unit No. 1. Rehabilitation of the main haulage-level ditch - Construction period, 4-1/2 months. In order to accommodate a flow of water up to 5,000 gallons per minute, which includes additional mine waters expected to be encountered in this exploratory program, it will be necessary to increase the capacity of the present discharge ditch. Studies based on a thorough analysis of hydraulic data, ease of installation, and various types of pipe, indicate that 16-inch-diameter transite pipe is most suitable for this service. Control of waterflow through a closed pipe will improve haulage and ventilation facilities, which are so important to this project.

Unit No. 2. Ventilation raise from 2005 level to 1880 level - Construction period, 1 month. In order to carry necessary and adequate ventilation for the project, a 6-foot by 10-foot raise will be required from the 2005 level to the 1880 crosscut. This will supply fresh air to the 2005 level.

Unit No. 3. Mine-water-pump installations - Time required for this project is estimated at 1 month. It will be necessary to install additional pumping facilities to accommodate an estimated flow of 2,000 gallons per minute from the 2005 level. This will require the installation of a 10-inch-diameter steel pump column from the 2005-level pump station to the 800-level discharge pipe, and the installation of two 4-G.T., 350-horsepower pumps on the 1630 level. A water sump is now

being cut on the 2005 level for pump installations consisting of two 1,000-gallon-per-minute submersible pumps, together with electrical pump-control systems.

Unit No. 4. Drifting and crosscutting on the 2005 level (fig. 8) Time estimated for this project is 30.8 months. Total drifting and crosscutting will be 8,600 feet of 7-foot by 10-foot heading. Most of the drift will be driven in the wall rock adjacent to known fissure areas, thus eliminating bad ground conditions found along fissures, and resulting in an estimated 80 percent saving of drift requiring timber. Diamond drilling and long-hole "percussion" drilling will be used to probe for favorable mineralized areas along fissure structures, and to keep a constant check on the location of structures as the drift progresses westerly. Crosscutting will be done in the most favorable structural and mineralized areas indicated by the drilling. The location of the diamond-drill holes and drifts and crosscuts will be determined by geological information as the project progresses. The selection of sites for drill holes and drifts and crosscuts will be influenced by ground and water conditions.

At periodic intervals the track will be raised and the drift bottom backfilled in construction of a 2-foot-deep water ditch, lagged on the track ballast side. This method of water-ditch construction has proved to be faster and more economical than the conventional way of carrying the ditch with the face.

Until the intake ventilation raise is completed, the drifting will be done on a one-shift basis; then for approximately 2,000-foot advance to the second or exhaust ventilation raise, it will be done on a two-shift basis; and after completion of the exhaust ventilation raise, the work will be done on a three-shift basis.

Unit No. 5. Second ventilation raise from 2005 level, 1880 level, and two water doors on 2005 level - Construction time, 1 month, in coordination with drifting and crosscutting. As a safety precaution against sudden water floods, it is deemed necessary to install two water doors at critical points along the main 2005-level drift.

To complete the necessary ventilation system for the work on the 2005 level, an exhaust ventilation, 6-foot by 10-foot raise will be required, to be driven from the 2005 level to the 1880 level. It will be located approximately 2,000 feet from the shaft.

Unit No. 6. Diamond drilling - Time required for this work is estimated to be 6.4 months. Diamond drilling will be carried on in conjunction and coordinated with drifting and crosscutting. The work will require 10,000 feet of drilling, AX-size minimum, in approximately 20 holes, and 300 feet of 6-foot by 10-foot drifts for approximately 15 drill stations.

Unit No. 7. Long-hole "percussion" drilling - This work will be done in coordination with diamond drilling and drifting and crosscutting, and will require 20,000 feet of drilling. It will be used to determine the locations of known structure projections and to aid in the locations of known structure projections and to aid in the location of mineralization and the position of ore shoots.

Unit No. 8. Diamond drilling on the 800 level - This work will completed early in the program and before the main 2005-level drift reaches beyond the Mayflower ore zone, which is estimated to extend westerly about 3,000 feet from the shaft. A vertical or inclined diamond-drill hole will be drilled downward to a depth of 1,000 feet from a point near the west end of the 801-A drift to determine the thickness of the D-4 diorite sill and to obtain information regarding the stratigraphy of the underlying sedimentary beds.

ESTIMATED COSTS OF PROJECT PROPOSALS

Unit No. 1. - Rehabilitation of Main Haulage-Level Ditch

Time required, 4.5 months. Install 7,140 feet of 16-inch diameter transite pipe to accommodate mine water.

(b) Personal Services

4 miners per shift (2 shift per day)
estimated 60-foot advance per day

$$\frac{\text{7140 feet}}{\text{60 feet per day}} = \text{119 days}$$

119 days x 8 shifts x $18.41 ----------	$17,526.32	
Fringes at 11.5 percent ----------	2,015.53	
		$19,541.85

Supervision

Underground ----------	1,913.00	
Shops and surface ----------	975.00	
Electrical ----------	525.00	
Engineering----------	1,350.00	
Accounting and payroll ----------	1,200.00	
	5,963.00	
$5,963.00 x 11.5 percent fringes --------	685.75	
	$ 6,648.75	
$\frac{\text{6,648.75}}{\text{21 working places}}$ = $316.61 per mo. x 4.5 mo. -------		1,424.75
		$20,966.60

(c) Operating Materials and Supplies

7,140 feet 16-inch pipe at $3.50 per foot, f.o.b. mine	$24,990.00	
Special curves and fittings, estimated at	1,000.00	
Sand ballast, misc., bits, rock bolts, timber, power, powder, etc. (estimated)	2,100.00	
		$28,090.00

(d) Operating Equipment

1 battery and motor (used) est.	5,750.00	
2 jackhammers (used) est.	400.00	
2 mine cars (used) est.	600.00	
	$6,750.00	
Depreciation for 4.5 mo. at 20 percent per year		
$\frac{4.5}{12 \text{ mo.}}$ = 37.5 percent of one year		
20 percent of $6,750.00 = $1,350.00 at 37.5 percent	506.25	$ 506.25
Total estimated cost - Unit No. 1		$49,562.85

Unit No. 2 - Ventilation Raise from 2005 Level to 1880 Level

Raise to furnish air supply for drifting west.
Time required, one month.

Raise 125 feet, 6 feet x 10 feet estimated advance, 5 feet per day working 2 shifts per day.

(b) Personal Services (See Schedule 1-A)

Direct labor:	
2 miners per shift at 2 shifts per day	
Estimated advance at 5 feet per day	
$18.41 x 4 x 26 shifts	1,914.64
$1,914.64 x 11.5 percent fringes	220.18
Haulage labor: (See Schedule 1-A)	
At $5.76 per foot x 125-foot raise	720.00

Hoisting labor: (See Schedule 1-A)
At $3.28 per foot x 125 feet---------- $ 410.00

Supervision (See Schedule 1-A)
At $5.98 per foot x 125 feet ---------- 747.50

Total cost of labor at $32.10 per foot ---------- $ 4,012.32

(c) Operating Materials and Supplies:

Ventilation
125 feet - 18-inch vent line at $3.00
per foot ---------- 375.00

Compressed air line
125 feet - 2-inch black pipe at 54¢ foot-- 67.50

Drillwater line
125 feet - 2-inch black pipe at 54¢ foot-- 67.50

Drill steel and bits at $3.50 foot
125 feet at $3.50 foot ---------- 43.75

Explosives
Powder - at $3.61 per foot
Primers- at $1.34 per foot
$4.95 per foot x 125 feet---------- 618.75

Timber at $20.65 set
$20.65 per 6 feet - $3.43 per foot x 125
feet ---------- 428.75

Electric power:
Compressed air, ventilation, pumps,
hoist, shops, surface, etc.,
Av. $6,200.00 per month

6,200.00
5,000 tons per month = $1.24 ton x 4.5 tons =
$5.58 per foot
$5.58 per foot x 125 feet ---------- 697.50

Total cost, operating supplies---------- $ 2,298.75

(d) Operating Equipment (See Schedule 1-B)

Depreciation $\frac{2,301.36 \text{ mo.}}{5,000 \text{ tons}}$ .. 0.46 ton at 4.5 ton per foot
$2.07 per foot

$2.07 per foot x 125-foot raise ----------	$ 258.75	$ 258.75

Total cost, Unit 2 ventilation raise at $52.56 per foot- $ 6,569.82

Unit No. 3. - Water Pump Installations - 2005 Level

Time required, one month. Estimated 2,000 gal. per min. flow

(a) 1. Install 10-inch pump column from 1630 pump station to 800-level tunnel pipe, requires 980 feet of pipe.

2. Install 10-inch pump column from 2005 level to 1630 pump station, requires 530 feet of pipe.

3. Install two 4-GT pumps on 1630 level, and two submersible pumps on 2005 level, including necessary switches and controls and mountings.

(b) Personal Services: (See Schedule 1-A)

Direct labor:		
4 miners per shift, 2 shifts per day		
$18.41 x 8 x 26 shifts ----------	$ 3,829.28	
$3,829.28 x 11.5 percent fringes ----------	440.36	
Hoisting labor:		
$3,694.88 per mo. ---------- / 21 working places	175.94	
Supervision		
$6,648.75 per mo. ---------- / 21 working places	316.61	
Total labor, Unit No. 3 ----------		$ 4,762.19

(c) Operating Materials and Supplies:

1510 feet of 10-inch steel pipe for column at $7.00 per foot with couplings at 10-foot lengths ----------	$10,570.00
Pump column hangers, lag screws, bolts, etc. ----------	540.00

Two Grove 6-inch check valves at $437.00 ea.	$ 874.00	
Two 10-inch gate valves at $651.00 ea.	1,302.00	
Misc. special curves, fittings, welding, etc., estimated at ----------	340.00	
Total operating supplies ----------		$13,626.00

(d) Operating Equipment:

Power cable, 1,310 feet One #2-0, 5,000-volt armored cable at $4.25 per foot ----------	$ 5,567.50	
Pumps at 1,000 gal. capacity, two 4-GT 350 h.p. at $7,777.62 ea., 9-1/2-inch impeller ----------	15,555.24	
Two BJ - 12-inch, 2CKH, 9 stage, 175 h.p. submersible pumps, 1,000 gal. per min., 500 head, at $8,121.00 ea. ----------	16,242.00	
Switches, controls for pumps at $3,120.00 ea. ----------	6,240.00	
Total machinery ----------	$43,604.74	
Depreciation (See Schedule 1-B)		
$3,028.10 / 21 working places = ----------	144.20	144.20
Total cost for Unit No. 3 ----------		$18,532.39

Unit No. 4. - Drifting and Crosscutting 8,600 feet

Time required, 30.8 months.

(a) Drift west 6,000 feet, 7 x 10-foot drift. Backfill 2 feet of drift bottom for water ditch. Crosscutting 2,600, 7 x 10 drift. Backfill 2 feet of drift bottom for water ditch. Two shifts per day for 2,000 feet, estimated at 8 feet per day, includes backfill for water ditch, timbering, rock bolting, track, pipe, and ventilation. Three shifts per day for 6,600 feet of drifting and crosscutting. Estimated at 12 feet per day advance working 3 shifts per day, etc.

(b) Personal Services: (See Schedule 1-A)

Direct labor:
3 miners per shift, 2 shifts per day
$18.41 x 6 men + 11.5 percent fringes
÷ 8-foot adv.
2,000 feet x $15.42 per foot ---------- $30,840.00
3 miners per shift, 3 shifts per day
$18.41 x 9 men + 11.5 percent fringes
÷ 12-foot adv.
6,600 ft. x $15.42 per foot ---------- 101,772.00

Hoisting labor:
8,600 feet at $3.28 foot ---------- 28,208.00

Haulage labor:
8,600 feet at $5.76 foot ---------- 49,536.00

Supervision:
8,600 feet at $5.98 foot ---------- 51,428.00

Total labor for Unit No. 4 at $30.44 foot ---------- $261,784.00

(c) Operating Materials and Supplies:

Ventilation, 6,600 feet 20-inch vent line
at $4.00 per foot ---------- 26,400.00
Ventilation, 2,000 feet 18-inch vent line
at $3.25 per foot ---------- 6,500.00
Compressed air pipe, 8,500 feet 4-inch pipe
at $1.65 per foot---------- 14,025.00
Drill water pipe, 8,500 feet 2-inch pipe
at $0.54 per foot---------- 4,590.00
Rails and fittings, 8,600 feet, 30 lb.
at $2.09 per foot ---------- 17,974.00
Drill steel and bits, 8,600 feet
at $3.50 per foot ---------- 30,100.00
Explosives, 8,600 feet at $4.95 per foot--- 42,570.00
Timber estimated 20 percent of 8,600 feet
requiring timber 1,720 at $7.86 per foot--- 13,519.20
Lagging for ditch 2 inches x 12 inches
x 8,600 feet, 17,200 bd. feet, 17,200
bd. feet, at $70.00 M ---------- 1,204.00
Misc. rock bolts, hoses, etc., est. ------- 2,500.00
Elect. power: compressed air, ventilation,
pumps, hoist, shops and surface, etc.,
at $5.58 per foot x 8,600 feet (See Unit 2) 47,988.00

Total operating supplies at $24.11 foot ---------- $207,370.20

(d) Operating Equipment:

Jumbo GD rail model J-2P ----------	$ 6,465.00
Two GD, Cf93P drifting drills, comp.-------	3,840.00
One GD, Cf93P drifting drill, bare---------	1,465.00
One 21 C Eimco loader ----------	4,720.00
One Canton car transfer ----------	1,200.00
Ten 50 cubic-foot mine cars at $920.00 each	9,200.00
One charging panel----------	740.00
Two 4-ton, 50-cell motor batteries --------	6,500.00
Power cable ventilation #2 rubber, 3 conductor, at $.78 foot ----------	6,240.00
Power cable, blasting and blowing, #4-3 conductor at $.39 foot----------	3,315.00
One set 100 KVA transformers (used) 2300-400 v. ----------	2,400.00
Five 25 h.p. fans (used) $560.00 each------	2,800.00
Total cost, machinery ----------	$48,885.00

Depreciation: (See Schedule 1-B)

Mayflower Mine $138,081.83, Present book value at 20 percent ----------	2,301.36/mo.	
Pump installation, $43,604.74, Purchase value at 20 percent ----------	726.74	
Drifting, Crosscutting, $48,885.00 --------	814.75	
	3,842.85	
$3,842.85 / 5,000 tons = 0.768 ton x 4.5 tons $3.46 per foot x 8,600 feet---	29,756.00	$ 29,756.00

Total cost for Unit No. 4 at $58.01 per foot --------- $498,910.20

Unit No. 5. - Drive 6' x 10' Ventilation Raise 125 Feet From 2005 Level to 1880 Level

Misc. construction:
Raise to serve as exhaust ventilation raise for drifting and crosscutting to west.
Cost equal to Unit No. 2 ventilation raise
Estimated cost at $52.56 per foot---------- 6,569.82

Water doors:
Install two water doors on 2005 level west end. Estimated cost for steel door, concrete 6-inch valves outlet, 4-inch valve air, 2-inch valve water, 16-inch concrete pipe rod valve, etc., est. at $980.00 ---------- $ 1,960.00

Total miscellaneous construction for Unit 5 ---------- $ 8,529.82

Unit No. 6. - Diamond Drilling, AX minimum:

Time required, 6.4 months.
10,000 feet of D. D. holes, estimated advance at 60 feet per day working 3 shifts per day.
Includes moving and set-up time.

(b) Personal Services: (Schedule 1-A)
Direct labor, D.D. holes
Estimated 15 drill stations
at 20 feet each, 300-foot drift at $30.44 --$ 9,132.00
(See drifting)
Drilling labor est. at $4.00 per foot,
60-foot advance per day x 26 shifts
per month at $6,240.00
$6,240.00 per month x 6.4 months ---------- 39,936.00

Hoisting labor:
$3,694.88 mo. $175.94 per mo. x
21 working places 1.6 mo. ---------- 281.50

Haulage labor:
$6,404.47 per mo. $304.97 per mo. x
21 working places 1.6 mo. ---------- 487.95

Supervision:
$6,648.75 $316.60 per mo. x
21 working places 6.4 mo. ---------- 2,026.24

Total labor at ~~$5.42~~ $5.19 foot ---------- $51,863.69

(c) Operating Materials and Supplies:

Estimated (experience - 1957)
Bits, cement, machine, rental, core boxes,
etc., at $4.00 ft. x 10,000 feet ---------- 40,000.00

Elect. power, compressors, ventilation,
pumping, hoisting, etc.
$6,200.00 per mo. $295.24 per mo. x 6.4 mo. $ 1,889.54
21 working places

Operating materials and supplies
drill stations, material for 15
drill stations at 20 feet each,
300 feet x $24.11 feet (see drifting) -------- 7,233.00

Total operating materials at $4.91 foot ---------- $ 49,122.54

(d) Operating Machinery and Equipment

Rental only -
Depreciation per month (See Schedule 1-B)

Mayflower Mine---------	$2,301.36
Pumps (new) ----------	726.74
Drifting, Crosscutting-	814.75
	$3,842.85

$3,842.85 $182.99 per mo. x 6.4 mo. -- 1,171.14 1,171.14
21 working places

Total cost for Unit No. 6 at ~~$10.44~~ $10.22 per foot ---------- $102,157.37

Unit No. 7. - Long-Hole Percussion Drilling

20,000-feet long hole, estimated advance
(experience) 150 feet per day. Work 3 shifts
per day, includes set-up and moving time.
One man per shift, 3 shift, 133 days
(5.1 mo.)

(b) $18.41 x 3 shifts x 133 days---------- 7,345.59
$7,345.59 x 11.5 percent fringes ---------- 844.74

Total ----------$ 8,190.33

(c) Operating Materials and Supplies:

Bits $21.20 ea., 320 feet per bit

21.20 / 320 feet = .066 foot x 20,000 feet---------- 1,320.00

5 sets drill steel, 300 feet ea. at $1,720.00 8,600.00

Total operating material at .50 foot ---------- 9,920.00

(d) Operating Equipment:

Two long-hole machines, complete,
$2,930.00
Depreciation, $2,930.00 at 20 percent
per year, $586.00
586.00 / 12 mo. = $48.84 x 5.1 months ---------- $ 249.08 $ 249.08

Total cost, long holing Unit No. 7 at ~~$1.06~~ $0.92 foot --------- $18,359.41

Unit No. 8. - Diamond Drill on 800 Level

(a) Drill 1,000 feet vertical or inclined hole from west end of 801A drift to check thickness of D-4 diorite and stratigraphy of sediments below.

(b) Personal Services:

Direct Labor:
One drill station, 20-foot raise:
Labor at $15.42 foot ---------- 308.40

Drill labor: est. at $4.00 per foot
60-foot adv. per day x 16 days x $4.00 foot---- 3,840.00
(0.61 mo.)

Supervision:
6,648.75 / 21 working places = $316.60 per mo. x 0.61 mo.- 193.12

Total labor ---------- $4,341.52

(c) Operating Materials and Supplies:

Bits, cement, machine rental, etc.,
at $4.00 foot x 1,000 feet ---------- 4,000.00

Electric power: Compressors, ventilation,
pumps, hoisting, etc.
6,200.00 per mo. / 21 working places = $295.24 per mo. x 0.61 mo.--- 180.09

Drill stations materials:
Timber, explosives, drill bits and
steel pipe, etc., est. at $12.96 foot ---------- 259.20

Total materials ---------- $4,439.29

(d) Operating Machinery and Equipment:

None -
Misc. rehabilitation and repair:
801-A level, clean up caves, lay pipe,
air and water, install ventilation,
etc., 2,700 feet at $1.25 per foot -------- $ 3,375.00 $ 3,375.00

Total estimated cost for Unit No. 8 ---------- $ 12,155.81

Miscellaneous Costs in Addition to Unit Costs

(e) Initial Rehabilitation and Repairs,
Buildings - Not applicable

(f) New Buildings, Fixtures, Installations -
Not applicable

(g) Miscellaneous:
Repairs, replacement and contingencies,
$1.31 per ton based on actual experience
at Mayflower Mine.
Mine base production - 5,000 tons per mo.

5,000 tons mo. x $1.31 ton x 41.7 mo.------- 13,006.43
21 working places

Analytical work, 600 assays at $4.50 ea.---- 2,700.00

Total miscellaneous ---------- 15,706.43

TOTAL, WEST MAYFLOWER DMEA PROJECT ---------- $730,484.10

Summary of Estimated Costs

Unit No. 1	Rehabilitation, haulage level-----	$ 49,562.85	4.5 mo.
Unit No. 2	Ventilation raise ----------	6,569.82	
Unit No. 3	Water pump installation ----------	18,532.39	
Unit No. 4	Drifting and crosscutting --------	498,910.20	30.8 mo.
Unit No. 5	Misc. construction, vent raise, etc.	8,529.82	
Unit No. 6	Diamond drilling ----------	102,157.37	6.4 mo.
Unit No. 7	Long-hole (percussion) drilling --	18,359.41	
Unit No. 8	Diamond drill hole, 800 level ----	12,155.81	
	Misc. costs in addition to unit costs ----------	15,706.43	
Total estimated cost of project ----------		$730,484.10	41.7 mo.

Government participation at 50 percent---- $365,242.05

Schedule 1-A

Unit Cost Estimates

Personal Services:

Actual cost per month, cost per foot, based on 5,000 tons production per month.

Haulage Labor:

2 - Main haulage motormen	at	$18.41 per day	=	$ 36.82 per day
4 - Level motormen	at	18.41	=	73.64
2 - Haulage level maintenance men	at	18.41	=	36.82
1 - Grizzly and station man	at	18.41	=	18.41
1 - Surface dumpman	at	18.41	=	18.41
2 - Surface dump, timber, supply	at	18.41	=	36.82
				220.92

$220.92 x 26 shifts per mo. = $5,743.92
5,743.92 x 11.5 percent
fringes = 660.55
Total cost haulage per mo. = $6,404.47

$\frac{6404.47}{5000 \text{ tons mo.}}$ = $1.28 per ton at 4.5 tons per foot drift = $5.76 per ft.

Hoisting Labor: base 5000 tons per mo.

90 hoistmen shifts per mo. at $18.41 per day = $1,656.90 per mo.
90 cager shifts per mo. at $18.41 per day = 1,656.90 per mo.
$3,313.80
$3,313.80 x 11.5 percent fringes ---------- 381.08

Total cost haulage per month $3,694.88

$\frac{3694.88}{5000 \text{ tons per mo.}}$ = 0.73 per ton x 4.5 tons per foot drift = $3.28 per foot

Supervision:

Underground	$1,913.00
Shops and surface	975.00
Electrical	525.00
Engineering and geology	1,350.00
Accounting and payroll	1,200.00
	$5,963.00
$5,963.00 x 11.5 percent fringes	685.75
Total supervision	$6,648.75 per mo.

$\frac{6648.75}{5000 \text{ tons/mo.}}$ = $1.33 ton x 4.5 tons per ft. drift = $5.98 per ft.

Schedule 1-A (Continued)

Wages at the Mayflower Mine are currently $17.00 per man, miners, timberman, mechanics alike. The wage rate of $17.00 per shift has been weighted for overtime which = $18.41 per day.

Fringe benefits 11.5 percent		
Workmens Compensation	5.482	percent
F.I.C.A.	2.250	"
Federal and State Unemployment	1.300	"
Group insurance	2.468	"
Total fringe benefits	11.5	percent

Schedule 1-B

Operating Machinery to be Purchased

Pumping:	
Power cable, 1,310 ft.,#2-0, 5,000 v. armored cable, at $4.25 per ft.	$ 5,567.50
2 4-GT, IR 350 h.p. pumps at $7,777.62 ea., 9-1/2-inch impeller	15,555.24
2 BJ, 12-inch 2CKH 9 stage, 175 h.p. submersible pumps at $8,121.00	16,242.00
Switches, controls for pumps at $3,120.00 ea.	6,240.00
	$43,604.74
Drifting and Crosscutting:	
1 Jumbo G. D. rail model J-2P	6,465.00
2 G.D. Cf - 93 P, drifting drills, complete	3,840.00
1 G.D. Cf - 93 P, drifting drill, bare	1,465.00
1 21 - C Eimco loader	4,720.00
1 Canton car transfer	1,200.00
10 50-cubic-foot mine cars at $920.00 ea.	9,200.00
1 charging panel	740.00
2 4-ton, 50-cell motor batteries	6,500.00
Power cable, ventilation #2 rubber, 3 conductor, at $.78 foot	6,240.00
Power cable, blasting and blowing #4, 3 conductor at $.39 foot	3,315.00
1 set 100 KVA transformers (used) 2300-440 volts	2,400.00
5 25-h.p. fans at $560.00 ea.	2,800.00
	$48,885.00
Drilling, Long Hole:	
2 long-hole machines, complete	2,930.00
Total machinery	$95,419.74

Depreciation Costs:

Mayflower Mine	$138,081.83 = book value at 20 percent
	= $27,616.36 year = $2,301.36 mo. = $0.46 ton
Pumps, new	$ 43,604.74 = purchase price at 20 percent
	= $ 8,720.08 year = $ 726.74 mo. = $0.145 ton
Drifts and Crosscuts	$ 48,885.00 = purchase price at 20 percent
	= $ 9,777.00 year = $ 814.75 mo. = $0.163 ton
Long hole	$ 2,930.00 = purchase price at 20 percent
	= $ 586.00 year = $ 48.84 mo. = $0.009 ton.

Schedule 1-B (Continued)

Mayflower book value of $138,081.84 is actual depreciated value of operating machinery on company books for the year 1958.

Production base of 5,000 tons per month includes ore and waste that will be mined in conjunction with the west Mayflower DMEA Project.

Present production for 1958 from the Mayflower Mine is 3,420 tons per month average.

21 working places:

The mine averages 20 steady working places underground. An average 21 working places has been used in calculating some project unit costs as a base for fair cost distributions.

PROPOSED FINANCING

The applicant is prepared to invest $365,242.05 in the proposed exploratory project, which is 50 percent of the total estimated cost of $730,484.10, in accordance with the regulations on Government participation, as stated in Section 7, DMEA Order 1, Amended.

CONCLUSIONS AND RECOMMENDATIONS

With the recent discovery of favorable limestone beds below the Pennsylvanian Weber quartzite, the ore-producing potential of the Park City district has been greatly increased. The Mayflower mine in the southeastern part of the district has produced copper-lead-zinc ores, having a total value of $32,000,000, from diorite and limestones formerly thought to be unfavorable for ore deposition. Several limestone beds, known to be favorable in nearby districts, remain completely unexplored beneath the Mayflower workings. The position of these beds is established by using the section as measured in the nearby Cottonwood-American Fork district.

Because there appears to be an excellent chance of discovering large tonnages of copper-lead-zinc ores in the lower limestones of the Mayflower mine, it is recommended that the above-described exploratory program, estimated to cost $730,484.10, be approved.

APPENDIX I

Paleozoic rocks of the Park City and Cottonwood districts

	Formation	Lithology	Thickness (in feet)
Pennsylvanian	Weber quartzite*	Pale gray to white, thick bedded quartzite, with interbedded limy sandstone and thin limestone.	1500-2000
	Morgan formation	Pale gray limestone in 1-2 foot beds. Pink cherty fossils.	350
Mississippian	Doughnut fm.*	Thin-bedded black limestone, locally cherty and highly fossiliferous. Up to 50 feet of black shale at base.	250-350
	Humbug formation*	Interbedded tan sandstone or quartzite and dark gray limestone	400
	Deseret ls.*	Medium- to thick-bedded dark gray to black limestone and dolomite, locally cherty.	800
	Madison ls.*	Thin-bedded dark gray limestone	450
	Jefferson dolomite*	(Upper) Pale gray massive dolomite (Lower) Dark gray massive dolomite. Both locally vuggy, thin basal bed of sandstone or gritty siltstone.	120
		Unconformity	
Cambrian	Maxfield ls.*	Oolitic, pisolitic, speckled, or wavy-bedded limestone. Thin- to thick-bedded.	0-1000
	Ophir formation*	(Upper) Fine-grained limy sandstone (Middle) Wavy-bedded gray limestone (Lower) Green micaceous shale	(160) (40) (200)
	Tintic quartzite	Massive tan quartzite	1000

* Ore-bearing formations

DMEA

		CODE
423		226
423		522

224 New Customhouse
Denver 2, Colorado
April 21, 1958

Memorandum

To: E. N. Harshman w/enclosures items 1-5 below
DMEA/SLC Att: Howes w/enclosures items 2-5 below

From: Acting Executive Officer, DMEA Field Team, Region III

Subject: Docket No. DMEA 4981 (Copper-Lead-Zinc) New Park Mining Company, (Mayflower Mine) Wasatch County, Utah

Enclosed is the following material relating to the subject docket:

1. Copy of application for Government assistance in exploration work under the DMEA program.

2. Memorandum of Review by O. M. Bishop, USBM.

3. Memorandum of Review by Thor H. Kiilsgaard, USGS.

4. Letter of transmittal of the foregoing to this office dated April 18, 1958, from the Chairman, Operating Committee, DMEA.

5. Routing Control sheet.

A field examination of the property and a joint report of findings and recommendations pertaining to the Applicant's work proposal are requested.

Original signed by
E. N. HARSHMAN

E. N. Harshman

HMC:dp
cc: Sec. Op. Comm. (2)
Docket
Chron.

[illegible]

[illegible]

To: [illegible] Structures Item 1, below
[illegible] Item 2, below

From: Acting Regional Director, HHS Region [illegible], Region III

Subject: [illegible] (Mayor-Councilman) [illegible]
Company - (Pittsburgh Site) Wabash County, [illegible]

Enclosed is the following material in response to the subject request:

1. Copy of application for Government assistance in [illegible] work under the Title [illegible] program.

2. [illegible] Review by [illegible]

3. [illegible] of [illegible]

4. Letter of [illegible] of the [illegible] to this office dated April 16, [illegible], from the Commonwealth [illegible] Commission, [illegible].

5. Pending [illegible] [illegible].

A Final evaluation of the project by and [illegible] report of findings and recommendations pertaining to the applicant's work [illegible] are requested.

Original signed by
E. N. HARSHMAN

E. N. Harshman

[illegible]
Enc. [illegible]
[illegible]
[illegible]

DMEA Form 7
(12-56)

OFFICIAL FILE COPY

Date	Surname	Code
4/17	Griswold	500
4/18	GCS	130
"	Johnson	110
"	Rutledge	100
4/22	C	220
		500

APR 18 1958 500

Mr. E. N. Harshman
Acting Executive Officer
DMEA Field Team, Region III
224 New Customhouse Bldg.
Denver 2, Colorado

Re: Docket No. DMEA-4981 (Copper-Lead-Zinc)
New Park Mining Company
Mayflower Mine
Wasatch County, Utah

Dear Mr. Harshman:

We are enclosing one copy of the cited application, submitted to us on April 15, 1958. The Applicant has advised us that a second copy of the application, with the accompanying map folio, will be given to the Bureau of Mines office in Salt Lake City; and that likewise, such special maps as may be needed will be provided to the Field Team.

Messrs. W. H. H. Cranmer, Clark L. Wilson and Gale A. Hansen were in Washington to discuss the project with us. In essence, they were advised that, while nothing we might say could be taken as a commitment, nevertheless our casual impression was that it would be much more logical to consider driving their present 1880 level, rather than the laborious shaft project which they presented.

We are enclosing copies of memoranda dated April 16 and 17, 1958, by O. M. Bishop, Bureau of Mines, and Thor H. Kiilsgaard, Geological Survey, respectively, relating to the project.

In view of the time element involved, it is highly desirable that the Field Team report reach us not later than June 1.

We call your attention to the memorandum of Osterstock and Gilkey, dated October 10, 1955, Docket DMEA-107. We note the statement " .. it is concluded that the metallization encountered in the 8-602 drift stands little chance of improving in grade in the event that this structure is at some later date followed into a limestone host rock."

Sincerely yours,

George C. Selfridge

Chairman, Operating Committee

Enclosures
APPROVED:

Horace T. Reno

Member, Bureau of Mines

Thor H. Kiilsgaard

Member, Geological Survey

WRGriswold/er 4/17/58
Copy to: Docket
Admr R File
Op. Committee
Mr. Bishop, USBM
Mr. Kiilsgaard, USGS
Chron.

8623

April 17, 1958

Mr. Frank Moore
U. S. Geological Survey
Federal Center
Denver, Colorado

Dear Frank:

This morning I attended a conference at which Clark Wilson, W. H. Crummer, and Gale Hansen of the New Park Mining Company proposed an extensive exploration project for the Mayflower mine, Park City, Utah. You are no doubt familiar with this application. It involves sinking an 600-foot shaft from the Mayflower level, from the old [redacted] workings west of the Mayflower shaft. From the new shaft, drifting would be done on the Mayflower-Pearl structures in the Mississippian Doserat and Madison limestones. Cost of the work is estimated at $780,000.00.

I understand that Mississippian stratigraphy is well exposed in the area south of Park City where Max Crittenden is working. As Max also is familiar with the Park City district, and as we want to take a very thorough look at this expensive project, it occurred to me that we should obtain his help, if possible. Accordingly, I obtained Andy's consent to ask Max and since then I have telephoned him. Max said he would be glad to help us.

We are anxious to get all field reports on possible projects as soon as possible so we may make decisions on them before July 1. We therefore probably will send a field referral to you tomorrow and certainly no later than Friday, and would like you to act on it as soon as possible.

Would you please phone Max and arrange an early date for the exam. He could meet you at Salt Lake and go from there to the mine with you. I suppose it also would be best if we could make a joint exam with one of Steve Wilson's engineers, although if the exam has to be postponed because of the Bureau, we might do it without them. If your report is to be here by June 1, or thereabouts, we will have to move quickly.

You should plan on writing our section of the field report, although you and Max might rough out the report before you separate. I am sure that Max's knowledge of the district will be of great help to you and I'm also sure you will enjoy working with him on this problem.

CC: C.A. Anderson Max Crittenden
E.N.Harshman W.R. Griswold

Sincerely,

Thor H. Kiilsgaard
Staff Assistant for [redacted]

[illegible]

[illegible]

[illegible]

OFFICIAL FILE COPY
DMEA
RECEIVED APR 17 1958
DATE | INITIALS | CODE
4/17 | | 200
4/17 | wrl | 500

IN REPLY REFER TO:

UNITED STATES
DEPARTMENT OF THE INTERIOR
GEOLOGICAL SURVEY
WASHINGTON 25, D. C.

April 17, 1958

~~Memorandum~~

To: W. R. Griswold, Defense Minerals Exploration Administration

From: T. H. Kiilsgaard, U. S. Geological Survey

Subject: Review of application, New Park Mining Company, DMEA Docket 4981 (Lead-Zinc)

The applicant proposes an extensive project to explore the southwestward extension of the Mayflower-Pearl vein zone at a depth of 800 feet below the Mayflower haulage level. Exploration would be roughly 4,000 feet southwest of the Mayflower ore bodies, and would be in the Madison and Deseret limestones. Estimated cost of the project is $720,000.00.

DMEA previously had an exploration contract with New Park, the records of which are filed under Docket 107. Under this contract, crosscuts were driven to the northwest and to the southeast from the western end of the Mayflower level. It is from the northwestern DMEA crosscut that the proposed shaft would be sunk. Drifts previously driven from this northwestern crosscut followed two very weak veins, the most northern one of which subsequently was tested by DDH No. 756 (see Final Report by R. W. Osterstock, DMEA 107, July 29, 1955). Core from this hole did not show any ore, although core recovery was poor. Osterstock concluded that future applications from this mine should receive serious consideration. He implied that parts of the mine might warrant exploration.

The applicant contends that the mineralized zone in the diorite, exposed in the Star-Galena level and on the 800 level warrants exploration at depth. The location of this zone is shown on the application on Map C, Map B, and Longitudinal Section E. From the map evidence and from evidence in Osterstock's report, the zone must be considered as very weak. What it will do in the underlying limestone is subject to question. The sinking of an expensive shaft on this showing alone is hardly warranted.

From an exploration standpoint, it would seem more prudent to extend the 1880 level westward, through the limestones, following the Mayflower vein. This would have the double purpose of exploring bedded ores in limestone, in what appears to be a westwardly raking ore body, also of providing a means of exploring the interval between the present Mayflower workings and the proposed target area. This drift could, however, present exploration obstacles, for it is noted in Gilkey's Final Report on the previous contract that Phase 3 of that project--drifting from the Star-Galena level--had to be stopped because of the large flow of water encountered. This same water condition could be expected in the presently proposed target area. Gilkey also refers to the ventilation problem, pointing out that on days of low barometric pressure it became necessary to suspend operations on the DMEA project. Unless this condition has been improved, it would not be safe to engage in further DMEA work.

I recommend that this application be referred to the field for an examination. The proposal has some merit as it proposes work on a stratigraphic horizon new to Park City, but one that has proven to be mineralized in other Utah mining districts. DMEA work to date in Park City has been extremely disappointing: perhaps this new approach offers a chance of being more rewarding.

Thor H. Kiilsgaard

Thor H. Kiilsgaard

UNITED STATES
DEPARTMENT OF THE INTERIOR
BUREAU OF MINES
WASHINGTON 25, D. C.

DMEA
RECEIVED APR 17 1958

DATE	INITIAL	CODE
4/17	H.E.	225
		500

April 16, 1958

Re: DMEA Docket
$719,566; Silver-
Copper-Lead-Zinc
New Park Mining Co.
Mayflower Mine
Wasatch County, Utah

Memorandum

To: W. R. Griswold, DMEA

From: O. M. Bishop, USBM

Subject: Review of application dated April 7, 1958 and received in this office April 14, 1958.

New Park Mining Company has applied for DMEA assistance in a project to explore a favorable fracture zone in the limestone section on the southwest extension of the productive Mayflower fissure system.

The preliminary report and the discussion with Company officials indicate the Deseret formation in the target area is a worthy prospect. By the same criteria, it seems the area between the outlined target area and the lower level stopes is also a justifiable ore search target. I, therefore suggest the Company and the Field Team weigh the advantages of a modified program to drive southwestward from the lowest level of the Mayflower shaft through the Deseret formation and to the crest of the major anticline piercing the defined target area some 4,200 feet west of the present drift face. As you indicated at the meeting, this plan would reduce the cost considerably. Exploration would proceed by controllable increments such that the project could be terminated at any advisable stage.

I recommend the application be referred to the Field Team for investigation.

O. M. Bishop

O. M. Bishop

Copy to Division of Minerals
Branch of Base Metals (2)
Mr. Kiilsgaard
Mr. Lamb
F I L E S

UNITED STATES
DEPARTMENT OF THE INTERIOR
DEFENSE MINERALS EXPLORATION ADMINISTRATION
WASHINGTON 25, D. C.

April 15, 1958

New Park Mining Company
907 Walker Bank Building
Salt Lake City 11, Utah

Subject: DMEA-4981

Gentlemen:

Your application for exploration assistance, dated April 7, 1958 submitted to our office at Washington, D.C. has been assigned Docket Number DMEA-4981 and referred to the Base Metals Division in the Washington office. Kindly identify all future correspondence relating to your application by this Docket Number.

Sincerely yours,

Allen S. Dakan, Director
Operations Control and
Statistics Division

Copy to: Region III.

For correspondence following Decembrr 31, 1960,

See Folder No. 1-A

(From January 1, 1961, to present)

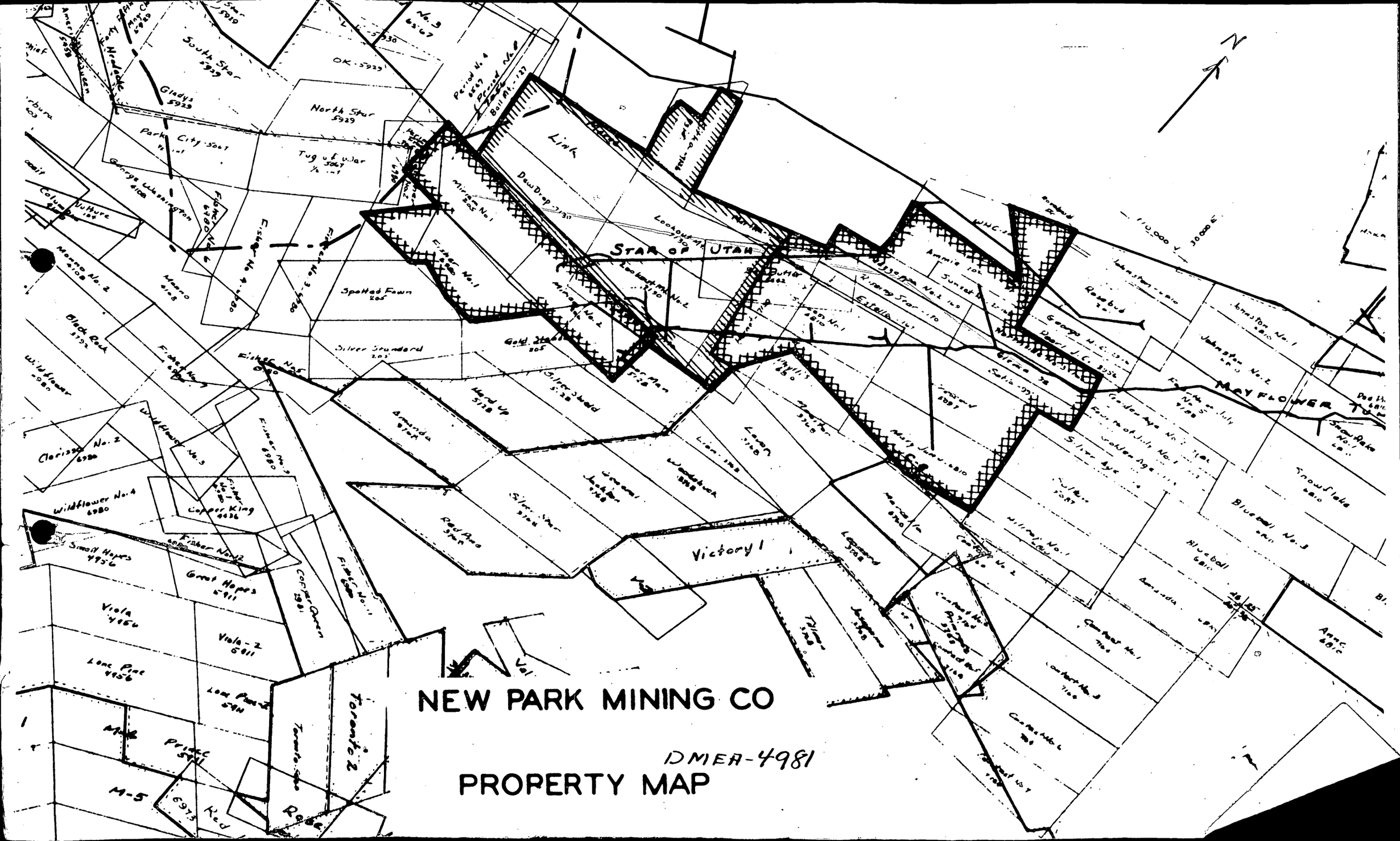
NEW PARK MINING CO
DMEA-4981
PROPERTY MAP
N
STAR OF UTAH
MAYFLOWER
Link
Victory I
Spotted Fawn
Silver Standard
Hard Up
Amanda
Red Ace
Black Rock
Wildflower
Wildflower No. 4
Small Hopes
Great Hopes
Viola
Viola - 2
Lone Pine
Lone Pine 2
Prince
M-5
Red
Toronto
Toronto 2
Copper King
Copper Queen
Fisher No. 1
Fisher No. 2
Fisher No. 3
Fisher No. 4
Fisher No. 5
Fisher No. 6
Fisher No. 7
Fisher No. 8
Fisher No. 9
Fisher No. 10
Fisher No. 11
Fisher No. 12
Morgan No. 1
Morgan No. 2
Estelle
Rosebud
Johnston
Johnston No. 1
Johnston No. 2
Snowflake
Bluebell
Bluebell No. 3
Amanda
Anne
Sunset
Ammie
Silver Age
Fourth of July
Cedar Age
Lion
Leon
Sparkler
Windsor
Mary Jane
Lucky Jim
Gold Star
Dew Drop
Lookout
Park City
Tug of War
North Star
South Star
Gladys
Monroe No. 2
Monroe
Clarissa No. 2
Clarissa
Columbia
Vulture
George Washington
Forty Winks
Period No. 4
Period No. 5
Period No. 6
Period No. 7
Period No. 8
Period No. 9
Period No. 10
Period No. 11
Period No. 12
Period No. 13
Period No. 14
Period No. 15
Period No. 16
Period No. 17
Period No. 18
Period No. 19
Period No. 20
Period No. 21
Period No. 22
Period No. 23
Period No. 24
Period No. 25
Period No. 26
Period No. 27
Period No. 28
Period No. 29
Period No. 30
Period No. 31
Period No. 32
Period No. 33
Period No. 34
Period No. 35
Period No. 36
Period No. 37
Period No. 38
Period No. 39
Period No. 40
Period No. 41
Period No. 42
Period No. 43
Period No. 44
Period No. 45
Period No. 46
Period No. 47
Period No. 48
Period No. 49
Period No. 50
Period No. 51
Period No. 52
Period No. 53
Period No. 54
Period No. 55
Period No. 56
Period No. 57
Period No. 58
Period No. 59
Period No. 60
Period No. 61
Period No. 62
Period No. 63
Period No. 64
Period No. 65
Period No. 66
Period No. 67
Period No. 68
Period No. 69
Period No. 70
Period No. 71
Period No. 72
Period No. 73
Period No. 74
Period No. 75
Period No. 76
Period No. 77
Period No. 78
Period No. 79
Period No. 80
Period No. 81
Period No. 82
Period No. 83
Period No. 84
Period No. 85
Period No. 86
Period No. 87
Period No. 88
Period No. 89
Period No. 90
Period No. 91
Period No. 92
Period No. 93
Period No. 94
Period No. 95
Period No. 96
Period No. 97
Period No. 98
Period No. 99
Period No. 100
Period No. 101
Period No. 102
Period No. 103
Period No. 104
Period No. 105
Period No. 106
Period No. 107
Period No. 108
Period No. 109
Period No. 110
Period No. 111
Period No. 112
Period No. 113
Period No. 114
Period No. 115
Period No. 116
Period No. 117
Period No. 118
Period No. 119
Period No. 120
Period No. 121
Period No. 122
Period No. 123
Period No. 124
Period No. 125
Period No. 126
Period No. 127
Period No. 128
Period No. 129
Period No. 130
Period No. 131
Period No. 132
Period No. 133
Period No. 134
Period No. 135
Period No. 136
Period No. 137
Period No. 138
Period No. 139
Period No. 140
Period No. 141
Period No. 142
Period No. 143
Period No. 144
Period No. 145
Period No. 146
Period No. 147
Period No. 148
Period No. 149
Period No. 150
Period No. 151
Period No. 152
Period No. 153
Period No. 154
Period No. 155
Period No. 156
Period No. 157
Period No. 158
Period No. 159
Period No. 160
Period No. 161
Period No. 162
Period No. 163
Period No. 164
Period No. 165
Period No. 166
Period No. 167
Period No. 168
Period No. 169
Period No. 170
Period No. 171
Period No. 172
Period No. 173
Period No. 174
Period No. 175
Period No. 176
Period No. 177
Period No. 178
Period No. 179
Period No. 180
Period No. 181
Period No. 182
Period No. 183
Period No. 184
Period No. 185
Period No. 186
Period No. 187
Period No. 188
Period No. 189
Period No. 190
Period No. 191
Period No. 192
Period No. 193
Period No. 194
Period No. 195
Period No. 196
Period No. 197
Period No. 198
Period No. 199
Period No. 200
Period No. 201
Period No. 202
Period No. 203
Period No. 204
Period No. 205
Period No. 206
Period No. 207
Period No. 208
Period No. 209
Period No. 210
Period No. 211
Period No. 212
Period No. 213
Period No. 214
Period No. 215
Period No. 216
Period No. 217
Period No. 218
Period No. 219
Period No. 220
Period No. 221
Period No. 222
Period No. 223
Period No. 224
Period No. 225
Period No. 226
Period No. 227
Period No. 228
Period No. 229
Period No. 230
Period No. 231
Period No. 232
Period No. 233
Period No. 234
Period No. 235
Period No. 236
Period No. 237
Period No. 238
Period No. 239
Period No. 240
Period No. 241
Period No. 242
Period No. 243
Period No. 244
Period No. 245
Period No. 246
Period No. 247
Period No. 248
Period No. 249
Period No. 250
Period No. 251
Period No. 252
Period No. 253
Period No. 254
Period No. 255
Period No. 256
Period No. 257
Period No. 258
Period No. 259
Period No. 260
Period No. 261
Period No. 262
Period No. 263
Period No. 264
Period No. 265
Period No. 266
Period No. 267
Period No. 268
Period No. 269
Period No. 270
Period No. 271
Period No. 272
Period No. 273
Period No. 274
Period No. 275
Period No. 276
Period No. 277
Period No. 278
Period No. 279
Period No. 280
Period No. 281
Period No. 282
Period No. 283
Period No. 284
Period No. 285
Period No. 286
Period No. 287
Period No. 288
Period No. 289
Period No. 290
Period No. 291
Period No. 292
Period No. 293
Period No. 294
Period No. 295
Period No. 296
Period No. 297
Period No. 298
Period No. 299
Period No. 300
Period No. 301
Period No. 302
Period No. 303
Period No. 304
Period No. 305
Period No. 306
Period No. 307
Period No. 308
Period No. 309
Period No. 310
Period No. 311
Period No. 312
Period No. 313
Period No. 314
Period No. 315
Period No. 316
Period No. 317
Period No. 318
Period No. 319
Period No. 320
Period No. 321
Period No. 322
Period No. 323
Period No. 324
Period No. 325
Period No. 326
Period No. 327
Period No. 328
Period No. 329
Period No. 330
Period No. 331
Period No. 332
Period No. 333
Period No. 334
Period No. 335
Period No. 336
Period No. 337
Period No. 338
Period No. 339
Period No. 340
Period No. 341
Period No. 342
Period No. 343
Period No. 344
Period No. 345
Period No. 346
Period No. 347
Period No. 348
Period No. 349
Period No. 350
Period No. 351
Period No. 352
Period No. 353
Period No. 354
Period No. 355
Period No. 356
Period No. 357
Period No. 358
Period No. 359
Period No. 360
Period No. 361
Period No. 362
Period No. 363
Period No. 364
Period No. 365
Period No. 366
Period No. 367
Period No. 368
Period No. 369
Period No. 370
Period No. 371
Period No. 372
Period No. 373
Period No. 374
Period No. 375
Period No. 376
Period No. 377
Period No. 378
Period No. 379
Period No. 380
Period No. 381
Period No. 382
Period No. 383
Period No. 384
Period No. 385
Period No. 386
Period No. 387
Period No. 388
Period No. 389
Period No. 390
Period No. 391
Period No. 392
Period No. 393
Period No. 394
Period No. 395
Period No. 396
Period No. 397
Period No. 398
Period No. 399
Period No. 400
Period No. 401
Period No. 402
Period No. 403
Period No. 404
Period No. 405
Period No. 406
Period No. 407
Period No. 408
Period No. 409
Period No. 410
Period No. 411
Period No. 412
Period No. 413
Period No. 414
Period No. 415
Period No. 416
Period No. 417
Period No. 418
Period No. 419
Period No. 420
Period No. 421
Period No. 422
Period No. 423
Period No. 424
Period No. 425
Period No. 426
Period No. 427
Period No. 428
Period No. 429
Period No. 430
Period No. 431
Period No. 432
Period No. 433
Period No. 434
Period No. 435
Period No. 436
Period No. 437
Period No. 438
Period No. 439
Period No. 440
Period No. 441
Period No. 442
Period No. 443
Period No. 444
Period No. 445
Period No. 446
Period No. 447
Period No. 448
Period No. 449
Period No. 450
Period No. 451
Period No. 452
Period No. 453
Period No. 454
Period No. 455
Period No. 456
Period No. 457
Period No. 458
Period No. 459
Period No. 460
Period No. 461
Period No. 462
Period No. 463
Period No. 464
Period No. 465
Period No. 466
Period No. 467
Period No. 468
Period No. 469
Period No. 470
Period No. 471
Period No. 472
Period No. 473
Period No. 474
Period No. 475
Period No. 476
Period No. 477
Period No. 478
Period No. 479
Period No. 480
Period No. 481
Period No. 482
Period No. 483
Period No. 484
Period No. 485
Period No. 486
Period No. 487
Period No. 488
Period No. 489
Period No. 490
Period No. 491
Period No. 492
Period No. 493
Period No. 494
Period No. 495
Period No. 496
Period No. 497
Period No. 498
Period No. 499
Period No. 500
Period No. 501
Period No. 502
Period No. 503
Period No. 504
Period No. 505
Period No. 506
Period No. 507
Period No. 508
Period No. 509
Period No. 510
Period No. 511
Period No. 512
Period No. 513
Period No. 514
Period No. 515
Period No. 516
Period No. 517
Period No. 518
Period No. 519
Period No. 520
Period No. 521
Period No. 522
Period No. 523
Period No. 524
Period No. 525
Period No. 526
Period No. 527
Period No. 528
Period No. 529
Period No. 530
Period No. 531
Period No. 532
Period No. 533
Period No. 534
Period No. 535
Period No. 536
Period No. 537
Period No. 538
Period No. 539
Period No. 540
Period No. 541
Period No. 542
Period No. 543
Period No. 544
Period No. 545
Period No. 546
Period No. 547
Period No. 548
Period No. 549
Period No. 550
Period No. 551
Period No. 552
Period No. 553
Period No. 554
Period No. 555
Period No. 556
Period No. 557
Period No. 558
Period No. 559
Period No. 560
Period No. 561
Period No. 562
Period No. 563
Period No. 564
Period No. 565
Period No. 566
Period No. 567
Period No. 568
Period No. 569
Period No. 570
Period No. 571
Period No. 572
Period No. 573
Period No. 574
Period No. 575
Period No. 576
Period No. 577
Period No. 578
Period No. 579
Period No. 580
Period No. 581
Period No. 582
Period No. 583
Period No. 584
Period No. 585
Period No. 586
Period No. 587
Period No. 588
Period No. 589
Period No. 590
Period No. 591
Period No. 592
Period No. 593
Period No. 594
Period No. 595
Period No. 596
Period No. 597
Period No. 598
Period No. 599
Period No. 600
Period No. 601
Period No. 602
Period No. 603
Period No. 604
Period No. 605
Period No. 606
Period No. 607
Period No. 608
Period No. 609
Period No. 610
Period No. 611
Period No. 612
Period No. 613
Period No. 614
Period No. 615
Period No. 616
Period No. 617
Period No. 618
Period No. 619
Period No. 620
Period No. 621
Period No. 622
Period No. 623
Period No. 624
Period No. 625
Period No. 626
Period No. 627
Period No. 628
Period No. 629
Period No. 630
Period No. 631
Period No. 632
Period No. 633
Period No. 634
Period No. 635
Period No. 636
Period No. 637
Period No. 638
Period No. 639
Period No. 640
Period No. 641
Period No. 642
Period No. 643
Period No. 644
Period No. 645
Period No. 646
Period No. 647
Period No. 648
Period No. 649
Period No. 650
Period No. 651
Period No. 652
Period No. 653
Period No. 654
Period No. 655
Period No. 656
Period No. 657
Period No. 658
Period No. 659
Period No. 660
Period No. 661
Period No. 662
Period No. 663
Period No. 664
Period No. 665
Period No. 666
Period No. 667
Period No. 668
Period No. 669
Period No. 670
Period No. 671
Period No. 672
Period No. 673
Period No. 674
Period No. 675
Period No. 676
Period No. 677
Period No. 678
Period No. 679
Period No. 680
Period No. 681
Period No. 682
Period No. 683
Period No. 684
Period No. 685
Period No. 686
Period No. 687
Period No. 688
Period No. 689
Period No. 690
Period No. 691
Period No. 692
Period No. 693
Period No. 694
Period No. 695
Period No. 696
Period No. 697
Period No. 698
Period No. 699
Period No. 700
Period No. 701
Period No. 702
Period No. 703
Period No. 704
Period No. 705
Period No. 706
Period No. 707
Period No. 708
Period No. 709
Period No. 710
Period No. 711
Period No. 712
Period No. 713
Period No. 714
Period No. 715
Period No. 716
Period No. 717
Period No. 718
Period No. 719
Period No. 720
Period No. 721
Period No. 722
Period No. 723
Period No. 724
Period No. 725
Period No. 726
Period No. 727
Period No. 728
Period No. 729
Period No. 730
Period No. 731
Period No. 732
Period No. 733
Period No. 734
Period No. 735
Period No. 736
Period No. 737
Period No. 738
Period No. 739
Period No. 740
Period No. 741
Period No. 742
Period No. 743
Period No. 744
Period No. 745
Period No. 746
Period No. 747
Period No. 748
Period No. 749
Period No. 750
Period No. 751
Period No. 752
Period No. 753
Period No. 754
Period No. 755
Period No. 756
Period No. 757
Period No. 758
Period No. 759
Period No. 760
Period No. 761
Period No. 762
Period No. 763
Period No. 764
Period No. 765
Period No. 766
Period No. 767
Period No. 768
Period No. 769
Period No. 770
Period No. 771
Period No. 772
Period No. 773
Period No. 774
Period No. 775
Period No. 776
Period No. 777
Period No. 778
Period No. 779
Period No. 780
Period No. 781
Period No. 782
Period No. 783
Period No. 784
Period No. 785
Period No. 786
Period No. 787
Period No. 788
Period No. 789
Period No. 790
Period No. 791
Period No. 792
Period No. 793
Period No. 794
Period No. 795
Period No. 796
Period No. 797
Period No. 798
Period No. 799
Period No. 800
Period No. 801
Period No. 802
Period No. 803
Period No. 804
Period No. 805
Period No. 806
Period No. 807
Period No. 808
Period No. 809
Period No. 810
Period No. 811
Period No. 812
Period No. 813
Period No. 814
Period No. 815
Period No. 816
Period No. 817
Period No. 818
Period No. 819
Period No. 820
Period No. 821
Period No. 822
Period No. 823
Period No. 824
Period No. 825
Period No. 826
Period No. 827
Period No. 828
Period No. 829
Period No. 830
Period No. 831
Period No. 832
Period No. 833
Period No. 834
Period No. 835
Period No. 836
Period No. 837
Period No. 838
Period No. 839
Period No. 840
Period No. 841
Period No. 842
Period No. 843
Period No. 844
Period No. 845
Period No. 846
Period No. 847
Period No. 848
Period No. 849
Period No. 850
Period No. 851
Period No. 852
Period No. 853
Period No. 854
Period No. 855
Period No. 856
Period No. 857
Period No. 858
Period No. 859
Period No. 860
Period No. 861
Period No. 862
Period No. 863
Period No. 864
Period No. 865
Period No. 866
Period No. 867
Period No. 868
Period No. 869
Period No. 870
Period No. 871
Period No. 872
Period No. 873
Period No. 874
Period No. 875
Period No. 876
Period No. 877
Period No. 878
Period No. 879
Period No. 880
Period No. 881
Period No. 882
Period No. 883
Period No. 884
Period No. 885
Period No. 886
Period No. 887
Period No. 888
Period No. 889
Period No. 890
Period No. 891
Period No. 892
Period No. 893
Period No. 894
Period No. 895
Period No. 896
Period No. 897
Period No. 898
Period No. 899
Period No. 900
Period No. 901
Period No. 902
Period No. 903
Period No. 904
Period No. 905
Period No. 906
Period No. 907
Period No. 908
Period No. 909
Period No. 910
Period No. 911
Period No. 912
Period No. 913
Period No. 914
Period No. 915
Period No. 916
Period No. 917
Period No. 918
Period No. 919
Period No. 920
Period No. 921
Period No. 922
Period No. 923
Period No. 924
Period No. 925
Period No. 926
Period No. 927
Period No. 928
Period No. 929
Period No. 930
Period No. 931
Period No. 932
Period No. 933
Period No. 934
Period No. 935
Period No. 936
Period No. 937
Period No. 938
Period No. 939
Period No. 940
Period No. 941
Period No. 942
Period No. 943
Period No. 944
Period No. 945
Period No. 946
Period No. 947
Period No. 948
Period No. 949
Period No. 950
Period No. 951
Period No. 952
Period No. 953
Period No. 954
Period No. 955
Period No. 956
Period No. 957
Period No. 958
Period No. 959
Period No. 960
Period No. 961
Period No. 962
Period No. 963
Period No. 964
Period No. 965
Period No. 966
Period No. 967
Period No. 968
Period No. 969
Period No. 970
Period No. 971
Period No. 972
Period No. 973
Period No. 974
Period No. 975
Period No. 976
Period No. 977
Period No. 978
Period No. 979
Period No. 980
Period No. 981
Period No. 982
Period No. 983
Period No. 984
Period No. 985
Period No. 986
Period No. 987
Period No. 988
Period No. 989
Period No. 990
Period No. 991
Period No. 992
Period No. 993
Period No. 994
Period No. 995
Period No. 996
Period No. 997
Period No. 998
Period No. 999
Period No. 1000

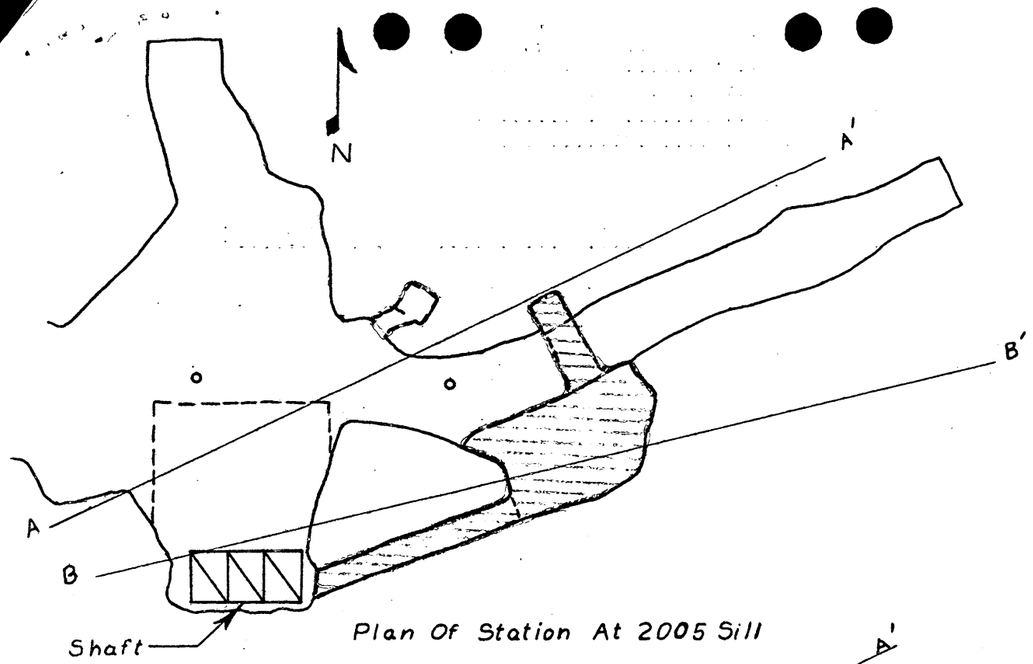

Plan Of Station At 2005 Sill

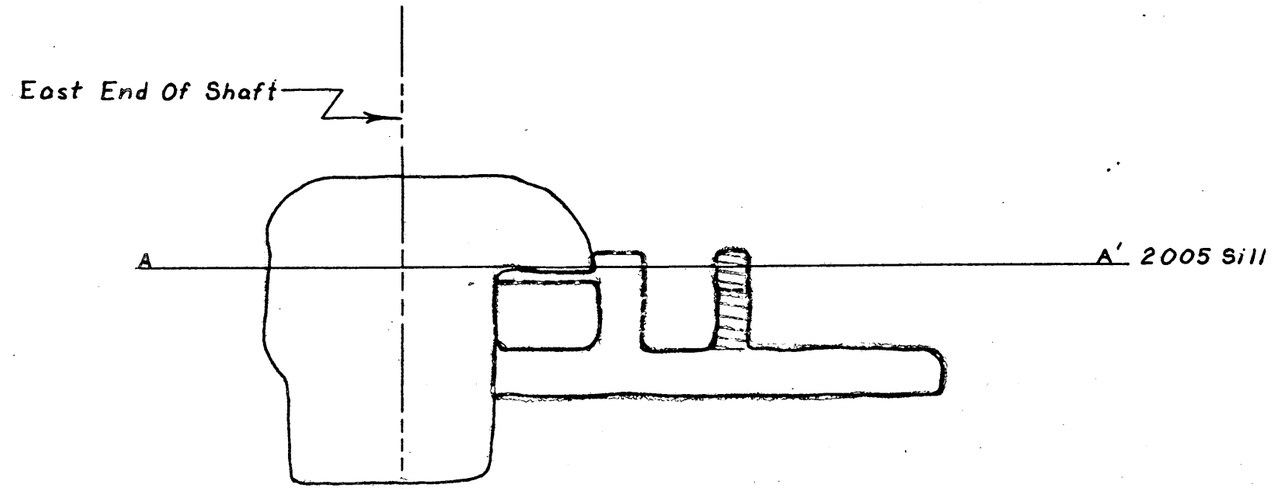

Vertical Section Along A-A'

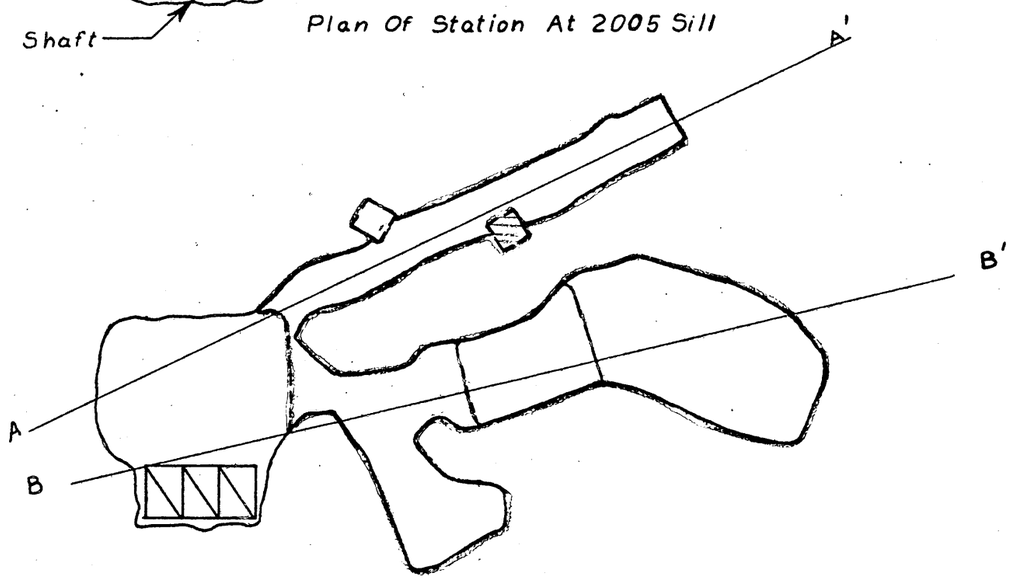

Plan At Sill - 15 Feet

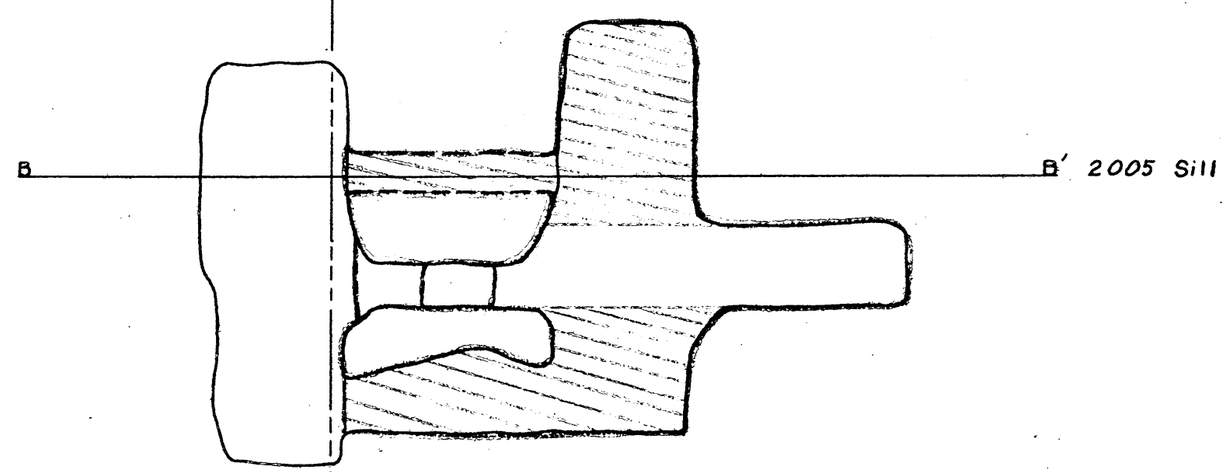

Vertical Section Along B-B'

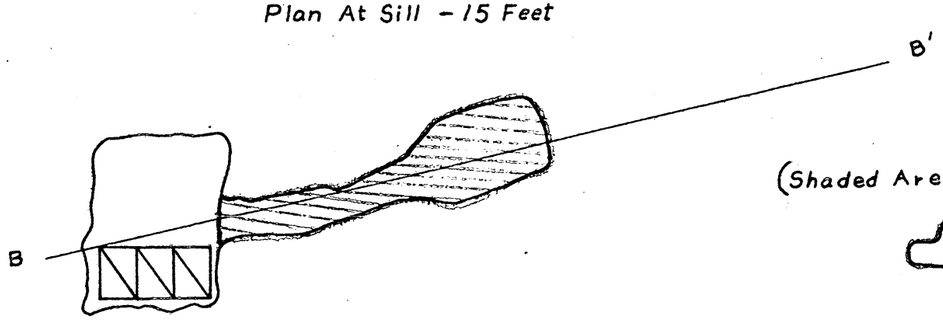

Plan At Sill - 30 Feet

(Shaded Areas Completed After July 1, 1958)

Sump Outline

MAYFLOWER MINE - NEW PARK MINING CO.
2005 LEVEL - STATION AND SUMP
PLANS AND SECTIONS
1" = 20' SEPT. 1959 B. Archer
DMEA DOCKET NO. 4981

DEPARTMENT OF THE INTERIOR
UNITED STATES GEOLOGICAL SURVEY

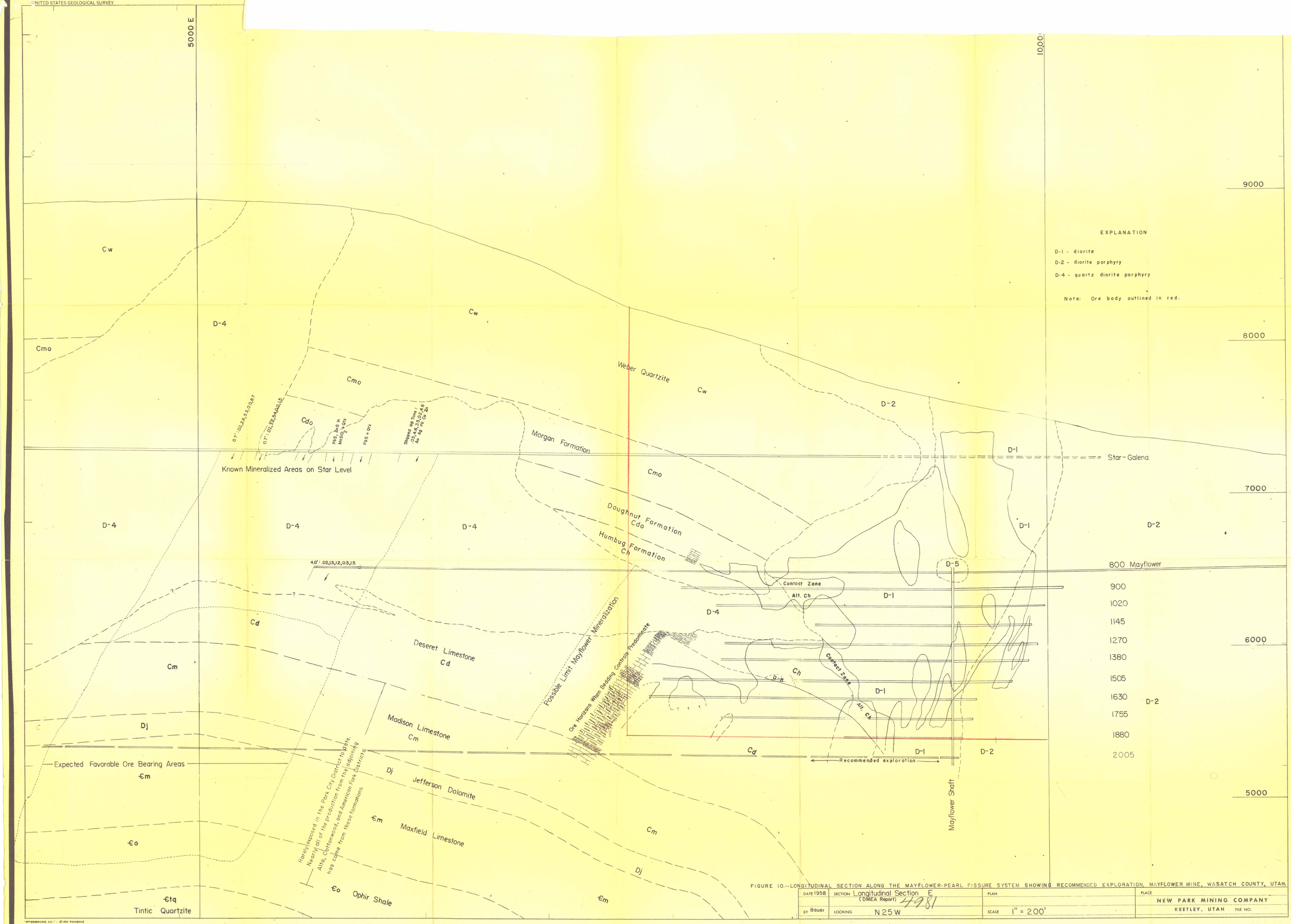

FIGURE 10.--LONGITUDINAL SECTION ALONG THE MAYFLOWER-PEARL FISSURE SYSTEM SHOWING RECOMMENDED EXPLORATION, MAYFLOWER MINE, WASATCH COUNTY, UTAH.

DATE 1958	SECTION Longitudinal Section E (DMEA Report) 47981	PLAN	PLACE NEW PARK MINING COMPANY
BY Bauer	LOOKING N 25 W	SCALE 1" = 200'	KEETLEY, UTAH FILE NO.

"EMBROKE CO." - #166 PHOENIX

DEPARTMENT OF THE INTERIOR
UNITED STATES GEOLOGICAL SURVEY

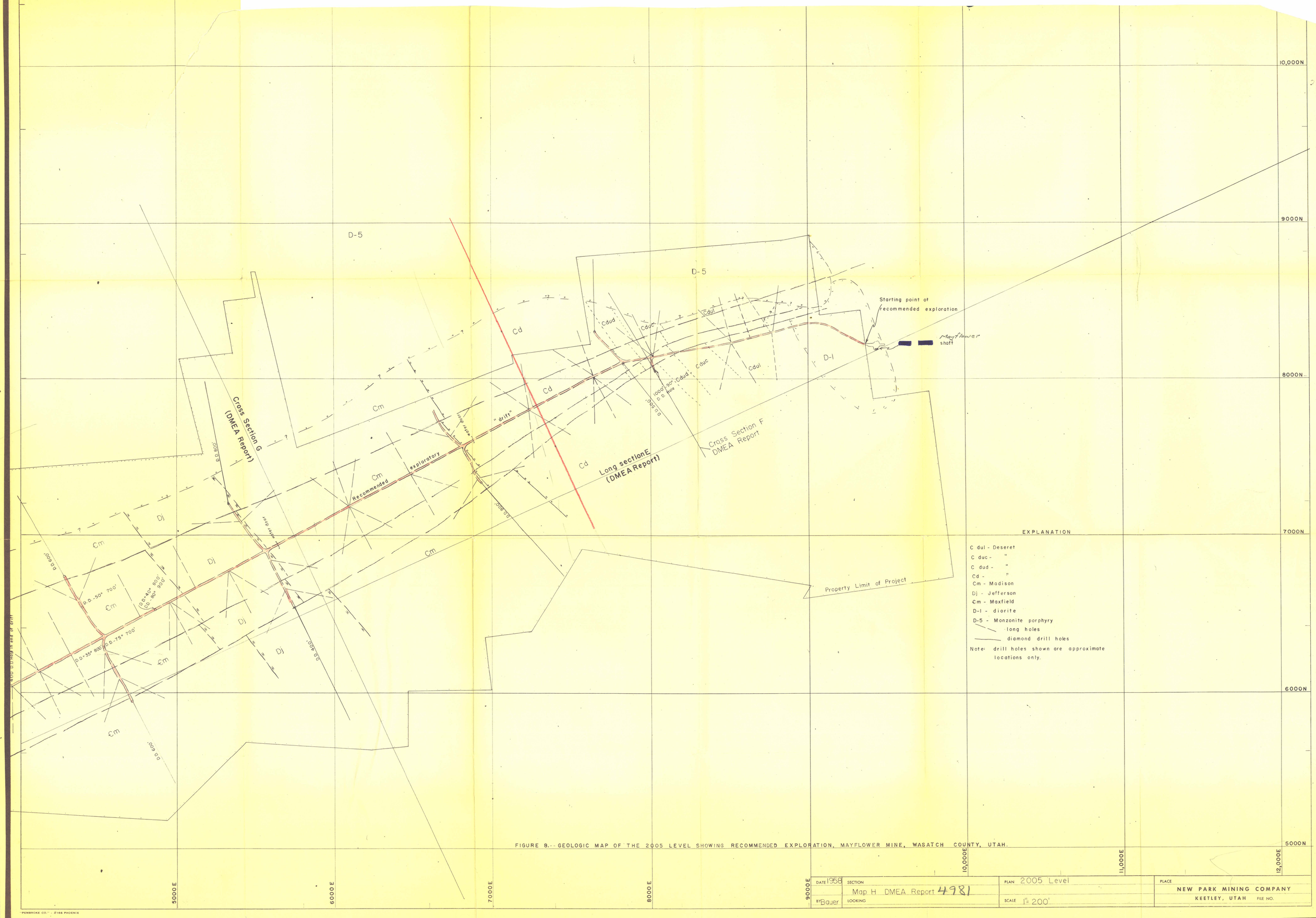

FIGURE 8.--GEOLOGIC MAP OF THE 2005 LEVEL SHOWING RECOMMENDED EXPLORATION, MAYFLOWER MINE, WASATCH COUNTY, UTAH.

DATE 1958	SECTION Map H DMEA Report 4981	PLAN 2005 Level	PLACE NEW PARK MINING COMPANY
BY Bauer	LOOKING	SCALE 1" = 200'	KEETLEY, UTAH FILE NO.

"PEMBROKE CO." - #166 PHOENIX

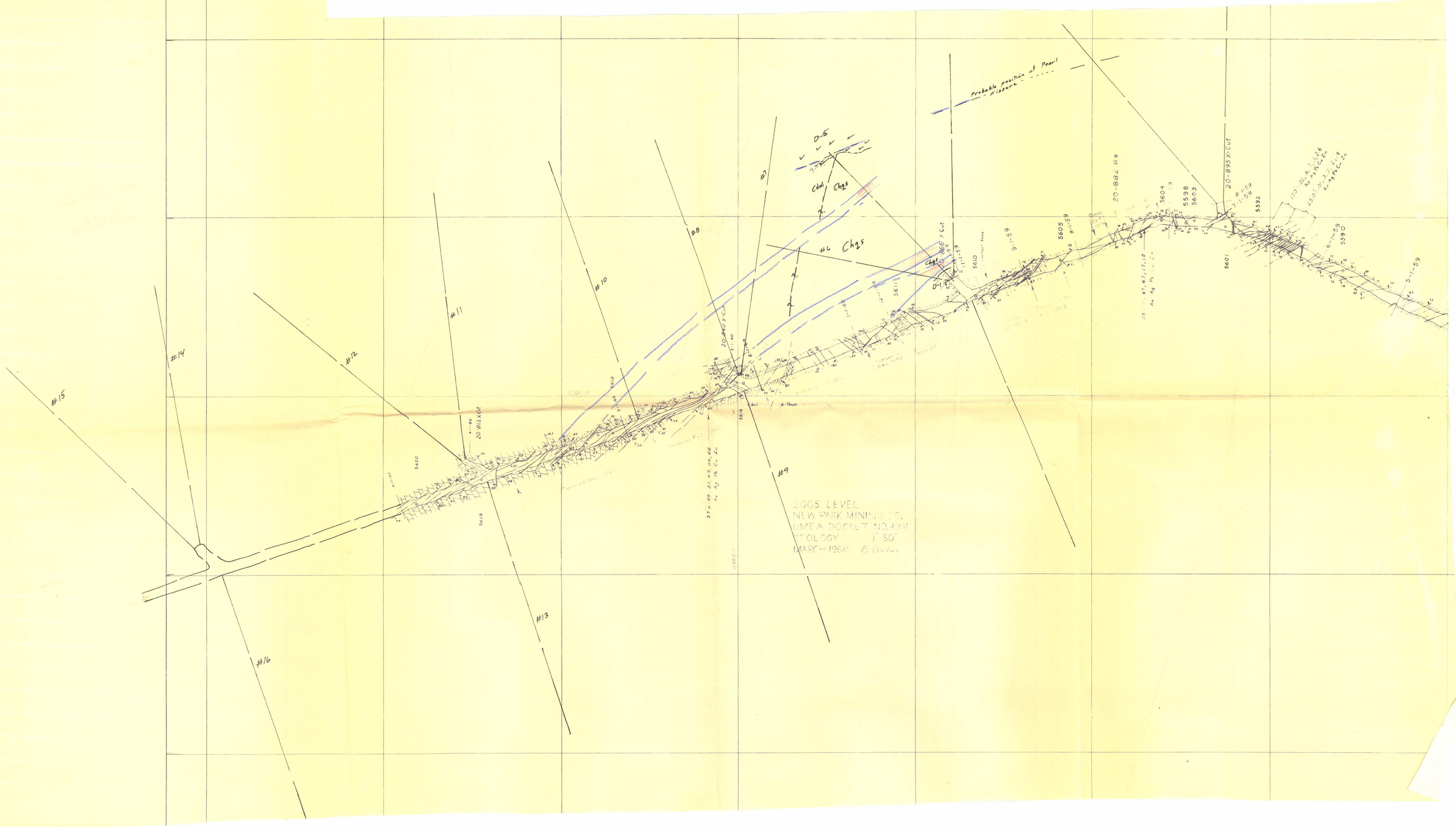
Probable position of Pearl Fissure
D-5
Cdul Chgs
#4 Chgs
Chgs
D-1
20-866 X Cut
20-882 Rs
20-895 X-Cut
20-840 X Cut
20-812 X Cut
#7
#8
#9
#10
#11
#12
#13
#14
#15
#16
5610
5611
5605
5604
5598
5603
5592
5601
5590
5620
5619
5618
5614
2005 LEVEL
NEW PARK MINING CO.
UMEA DOCKET NO.4081
GEOLOGY 1" 50'
MARCH 1960 B. Walker