| Activity ID: 08LCA04 | | | | USGS CMG FACS Operation Log | | | | | | |
|---|---|---|---|---|---|---|---|---|---|---|
| Equipment Code | ID | Start Day | Start Hour | Start Min | Start Comment | End Day | End Hour | End Min | End Comment | Depth (meters) |
| Boom | 08B01 | 9/2/08 | 17 | 15 | Lake Prevatt (West) | 9/2/08 | 17 | 18 | 500ms shot, 100 ms sec | |
| Boom | 08B02 | " | 17 | 20 | many turns | " | 17 | 28 | 20 KHz - SBC06626 | |
| Boom | 08B03 | " | 17 | 28 | many turns | " | 17 | 42 | ( | |
| Boom | 08B04 | " | 17 | 54 | Lake Prevatt NS | " | 18 | 50 | | |
| Boom | 08B05 | | 18 | 01 | 879v, 900 [illegible] | " | 18 | 07 | | |
| Boom | 08B06 | " | 18 | 08 | weeds | " | 18 | 10 | | |
| Boom | 08B07 | " | 18 | 12 | p.s. problem | | 18 | 19 | -No Data file/Data- | |
| B | 08B08 | 9/3/08 | 12 | 10 | Lake Louisa | 9/3/08 | 13 | 20 | Elec. Noise (?) (P.S. prob?) | |
| B | 08B09 | " | 13 | 20 | Sonar [illegible] SBP 100/1500 [illegible] | | 13 | 44 | Channel Beep gen | |
| | | " | | | (ps cutout?) | | " | | | |
| B | 08B10 | " | 13 | 54 | Elec. Noise (PS problem?) | | 14 | 37 | | |
| | | | | | (P.S. Pulse Gen Problem?) | | | | | |
| | | | | | | | | | | |
| B | 08B11 | " | 19 | 11 | Lake Helen (Testing) | | | | | |
| | | | | | Sonar Wiz SBP | | | | | |
| | | | | | | | | | | |
| B | 08B12 | " | " | | SB Logger | | | | | |
| | | | | | | | | | | |
| B | 08B13 | " | | | -Using 1K gen for PS- | | | | -Data look OK | |
| | | | | | -disconnected AC cube from | | | | | |
| | | | | | gen (using 2K for PC & gps) | | | | | |
| | | | | | -Removed com ground zero | Test/Troubleshoot | | | | |
| | | | | | before 1K/2K gen | | | | | |
| | | | | | 380v/9venier | | | | | |
| B | 08B14 | | | | GPS plugged back in | | | | | |
| | | | | | -hooked grnd between | | | | | |
| | | | | | 1KW/2KW - noise! | | | | | |
| | | | | | -must use 1KW for PS, | | | | | |
| | | | | | 2KW for PC, NAV | | | | | |
| | | | | | | | | | | |
| B | 08B15 | | | | Sonar Wiz SBP, 380v/9venier | | | | | |
| | | | | | PS on 1KW, PC/NAV - 2KW | | | | | |
| | | | | | -no common ground- | | | | | |

| Activity ID: 08LCA04 | | | | USGS CMG FACS Operation Log | | | | | | |
|---|---|---|---|---|---|---|---|---|---|---|
| Equipment Code | ID | Start Day | Start Hour | Start Min | Start Comment<br>Cherry Lake | End Day | End Hour | End Min | End Comment | Depth (meters) |
| B | 08B16 | 9/4/08 | 13 | 14 | Smartwiz 500/100 | 9/4/08 | 13 | 29 | Wind 10-20 kts from North | |
| B | 08B17 | " | 13 | 29 | (same [illegible] - [illegible] 1K | " | 13 | 48 | | |
| B | 08B18 | " | 13 | 48 | for B.S / 2K for PS, gps | " | 13 | 59 | - noisy - | |
| B | 08B19 | " | 14 | 00 | - - gen deed | " | 14 | 16 | | |
| B | 08B20 | " | 14 | 16 | noisy - choppy | " | 14 | 28 | | |
| B | 08B21 | " | 14 | 30 | | " | 14 | 39 | | |
| B | 08B22 | " | 14 | 39 | | " | 14 | 48 | | |
| B | 08B23 | " | 14 | 48 | | " | 15 | 04 | | |
| B | 08B24 | " | 15 | 04 | | " | 15 | 14 | | |
| B | 08B25 | " | 15 | 14 | | " | 15 | 32 | | |
| B | 08B26 | " | 15 | 32 | | " | 15 | 42 | | |
| B | 08B27 | " | 15 | 45 | | " | 16 | 00 | | |
| B | 08B28 | " | 16 | 00 | rough - noisy - choppy | " | 16 | 03 | | |
| B | 08B29 | | 16 | 11 | | " | 16 | 25 | | |
| B | 08B30 | " | 16 | 37 | Cherry Lake Canal | " | 16 | 45 | | |
| | | | | | | | | | | |
| B | 08B31 | " | 19 | 04 | Lake Hiawassee | " | 19 | 15 | | |
| B | 08B32 | " | 19 | 15 | (same Smartwiz settings) | " | 19 | 24 | | |
| B | 08B33 | " | 19 | 24 | Noisy sigs, choppy | " | 19 | 32 | | |
| B | 08B34 | " | 19 | 32 | | " | 19 | 42 | | |
| B | 08B35 | " | 19 | 42 | choppy | " | 19 | 50 | | |
| B | 08B36 | " | 19 | 50 | | " | 20 | 00 | | |
| B | 08B37 | " | 20 | 00 | | " | 20 | 18 | | |
| B | 08B38 | " | 20 | 18 | | " | 20 | 22 | | |
| B | 08B39 | " | 20 | 22 | | " | 20 | 37 | | |
| B | 08B40 | " | 20 | 40 | | " | 20 | 43 | | |
| B | 08B41 | " | 20 | 44 | | " | 20 | 48 | | |
| B | 08B42 | " | 20 | 52 | | " | 20 | 55 | | |
| B | 08B43 | " | 20 | 59 | | | 21 | 03 | | |
| B | 08B44 | " | 21 | 14 | | | 21 | 18 | | |
| B | 08B45 | " | 21 | 18 | | | 21 | 22 | | |
| B | 08B46 | " | 21 | 22 | | | 21 | 52 | | |
| B | 08B47 | " | 21 | 30 | | | | | | |

GPS-TO-SHOT DISTANCE _____

SLED-TO-SHOT DISTANCE _____

STREAMER-TO-SHOT DISTANCE _____

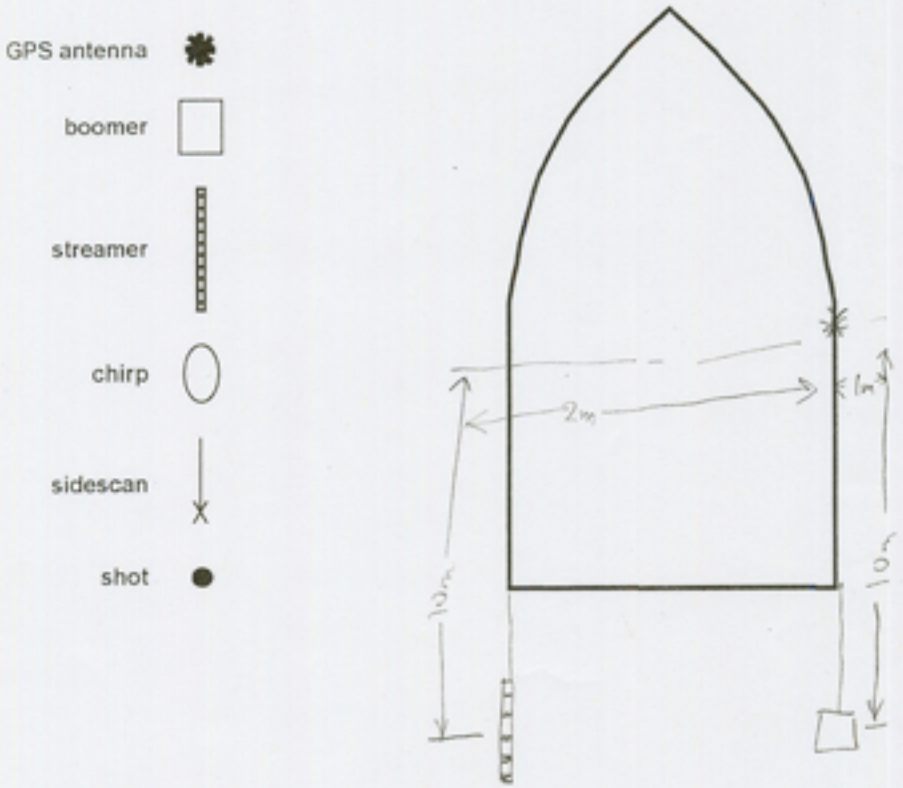


BOOMER EXAMPLE

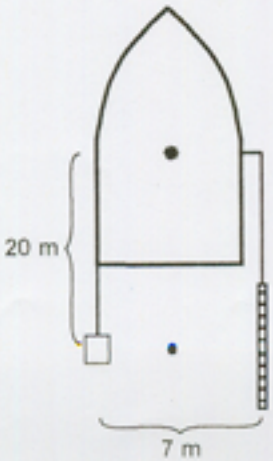

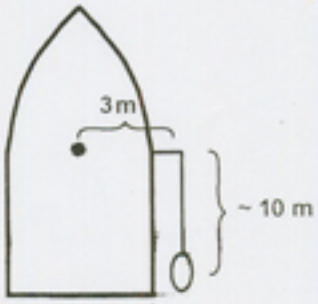
CHIRP EXAMPLE