Activity ID: Ø7SCCØ1

USGS CMG FACS Operation Log

Equipment Code	ID	Start Day	Start Hour	Start Min	Start Comment	End Day	End Hour	End Min	End Comment	Depth (meters)
C	07I.01	6/2/07	14	26	bottom check on	6/2/07	15	20	.5-8 kHz, 5ms pulse	4m
									200 ms shot, 50ms acquis	
F	07F.01	6/2/07	14	26		"	15	20	using 1500 at 5V	
H	Shore_pan_0003 RAW	6/2/07	14	35	IMU offsets applied to Knudsen head (rod), AC cor	"	15	20	- Knudsen PCMCIA prob	
C	07E 02	"	15	24		"	16	22		
F	07F12	"	15	24		"	15	45	- Knud only records 15 min data by default	
F	07F13	"	15	45	- Need to be able to name	"	16	02		
F	16_xxxx	"	16	02	Knud files w/o convention, time or size limits !!!	"	16	22	- doing Knudsen convention	
C	07I03	"	16	35	swell on	"	17	42		
F	16_xxx		16	35	- auto record - sys filenames	"	23	37		
H	Shore_pan_05	"	16	35		"	20	08	pnd 0016_2007_153_2323_58	
C	07I 04	"	17	42		"	18	50		
C	07I 05	"	18	50	"		19	56		
C	07I06	"	19	56	"		21	07		
H	.... 03B	"	20	08	SV applied to Knudsen		21	41	SV 1536	9m
C	07I07	"	21	07			21	41		
C	07I08	"	21	41	"		23	16		
H	 04	"					23	37		
C	SBL-20070602 224132_SBL	"	23	16			23	37		
C	07I 09	6/4/07	14	09			14	56	1532 SV	7m
H	Por_Tol_gul_01A	"	14	09			16	34		
F	0001_2007_155_1409 HF/LP	"	14	09			16	34		
C	07I 10	"	14	56			16	02		
C	07I 11	"	16	02			16	34		
C	07I 12	"	16	46			[illegible]	52		
F	0002_0002_155_1646	"	16	46			18	01		
H	Shor-par-gul-02	"	16	46			16	58		

Activity ID: 078CC01

USGS CMG FACS Operation Log

Equipment Code	ID	Start Day	Start Hour	Start Min	Start Comment	End Day	End Hour	End Min	End Comment	Depth (meters)
H	pre_pat_log 01A	6/4/07	16	58		6/4/07	18	01	s	4m
C	07I13	"	17	52		6/4/07	18	01	storm	
C	07C14	6/5/07	15	30	SB424, 4-16KHZ, 10ms pulse 200ms shot 50ms sec	6/5/07	16	46	electrical noise on 424	4m
H	0P00A	"	15	40		"	17	17	(suspect spider)	
F	0001_2007_156_1553	"	15	53		"	17	17	SV 1534	
C	07C 15	"	16	46	SB424	"	17	17		
H	023_1729	"	17	29		"	20	30		
F	0002_2007_156_1730	"	17	30		"	20	30		
H	035_2031	"	20	31		"	20	45		
E	0003_2007_156_2031	"	20	31		"	20	46		
C	07I 16	"	20	59	SB512: .5-8KHZ, 5ms pulse 200ms shot, 50ms sec	"	22	05		
F	0004_2007_156_2059	"	20	59		"	22	05		
H	SPG01	"	20	59		"	22	12		
C	07I 17	"	22	12	512i	"	22	31		3m
F	0005_2007_156_2212	"	22	12		"	22	31		
H	SPG02	"	22	12		"	22	31		
C	07I 18	6/6/07	14	38	512i (gain 128)	"	15	28	SV 1530	
F	[redacted]	"	14	38		"	15	28		
H	[redacted]	"	14	38		"	15	28		
C	[redacted]	"	15	38		"	15	56		
H	[redacted]		15	38		"	15	56		
F	[redacted]	"	15	35		"	15	52	Thunderstorm	3m
C	07I 20	"	18	30		"	18	56		
H	SPB028	"	18	30		"	18	56		
F	... 1830_LF	"	18	30						
H	SPB02D									
H	SP002.01	6/7/07	14	26		6/7/07	15	16	CHIRP P.S. AND INOP	
F	0001_2007_158_1426	"	14	26		"	22	32	-NO FIX AVAIL - NEW ONE	
H	shot-fan.pilot	"	15	10		"	22	32	STARTED	

Activity ID: 07SCC01

USGS CMG FACS Operation Log

Equipment Code	ID	Start Day	Start Hour	Start Min	Start Comment	End Day	End Hour	End Min	End Comment	Depth (meters)
H	035-1335	6/8/07	13	35		6/8/07	13	52	SV1532	5m
F	0001-2007-169 1335	6/8/07				"	22	15		
H	036-1352	"	13	52		"	14	36		
H	1039	"	14	36		"	15	06		
H	1040A	"	15	06			16	38		
H	1046	"	16	38			17	00		
H	1048	"	17	00						
							22	15		
C	07:21	6/10/07	13	43	512i, .5-8kHz, 5ms pulse 50ms scan, 2mms shot	6/10/07	14	52	NEW POWER AMP - Chirp	5m
F	0001-2007-167-1342	"	13	42			22	33	1535 . 169-2238	
H	001-1343	"	13	43			16	15	Hypack not getting depth	
C	07:22	"	14	52			16	00	from Knudsen - cable unplugged	
C	07:23	"	16	00			17	09		
H	001-1620	"	16	20			18	32	Depth restored	
C	07:24	"	17	09			18	13		
C	07:25	"	18	13	tight turn		18	25		
C	07:26	"	19	44			19	44		
H	001-1844	"	18	44			20	13		
C	07:27	"	19	44			20	13		
C	07:28	"	20	13			21	02		
H	pitching	"	20	13			22	34		
C	07:29	"	21	02			22	08		
C	07:30	"	22	08			22	36		
C	07:31	6/11/07	13	37	512i, .5-8kHz, 5ms pulse 2mms shot, 50ms scan		14	44	1535 m. sv	
F	0001-2007-162 1338	"	13	38			20	27		
H	001-1339	"	13	39						
C	07:31	"	14	44			15	00 (?)		
C	07:32	"	15	00(?)			15	19		
C	07:33	"	15	19						
C	07:34	"					16	59		
C	07:35	"	16	59						

Activity ID: 07SCC01

USGS CMG FACS Operation Log

Equipment Code	ID	Start Day	Start Hour	Start Min	Start Comment	End Day	End Hour	End Min	End Comment	Depth (meters)
H	gilchirp05A	6/11/07	16	59			18	08		5m
C	07:36	"	18	08			19	21		
C	07:37	"	19	21			20	27		
C	07:38	"	21	17			21	20		
F	0003_2007_162_2117	"	21	17						
H	gilchirp06A	"	21	17			22	32		
C	07:39	"	21	23			22	32		
C	07:40	"	22	32			23	10		
C	07:41	"	23	19			23	52		
C	07:42	6/13/07	14	24	512 i, .5-8 kHz, 5 max, 200ms sw 50ms ao		15	31	1538 sv	
H	001_1426	"	14	26			19	00	changing view window	4m
F	0001_2007_164_1423	"	14	23			21	33	changing nav data acq. rate	
C	07:43	"	15	31			16	19		
C	07:44	"	16	19			17	28		
C	07:45	"	17	28	.5-6 KHZ 20 ms		18	20		
C	07:46	"	18	21			19	28		
H	002-1820	"	19	20			21	33		
C	07:47	"	19	28			19	50	Nav cable unplugged	
C	07:48	"	20	02	.5-8kHz, 5 ms		21	06		
C	07:49	"	21	06			21	33		

Ø7SCCØ1

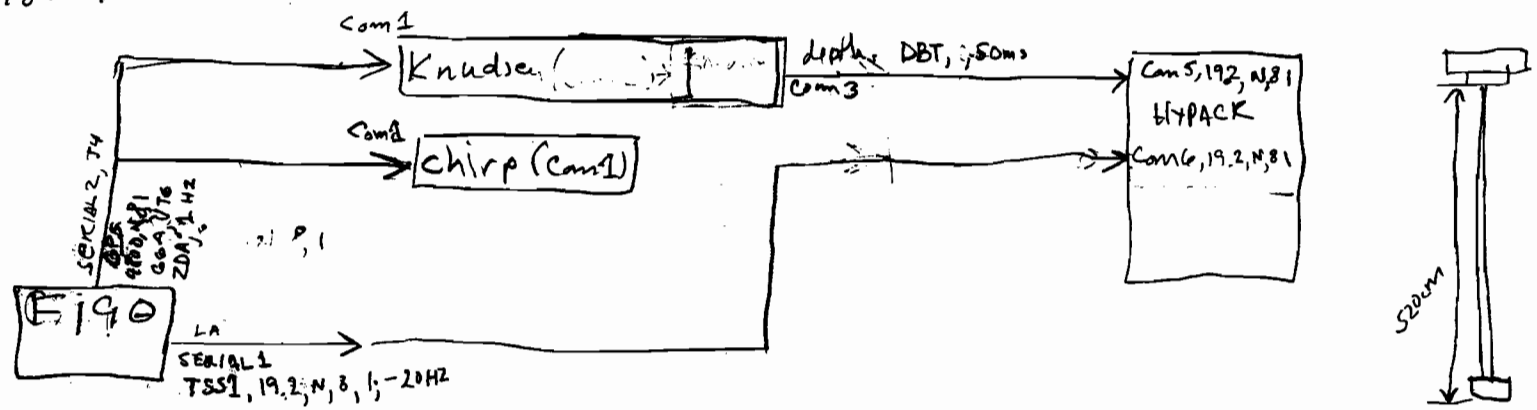

512i - Ø7ixxx
424 - Ø7cxxx
20000 shot

512i - 1-10 KHZ, 5 ms pulse - 50 ms record, 200 ms shot, 60% power - SHALLOW reflectors
.5-6 KHZ, 9 ms pulse - 50 ms record, 200 ms shot, 60% power - Deep "

Knudsen 07f xxx

F190 to ducer offsets

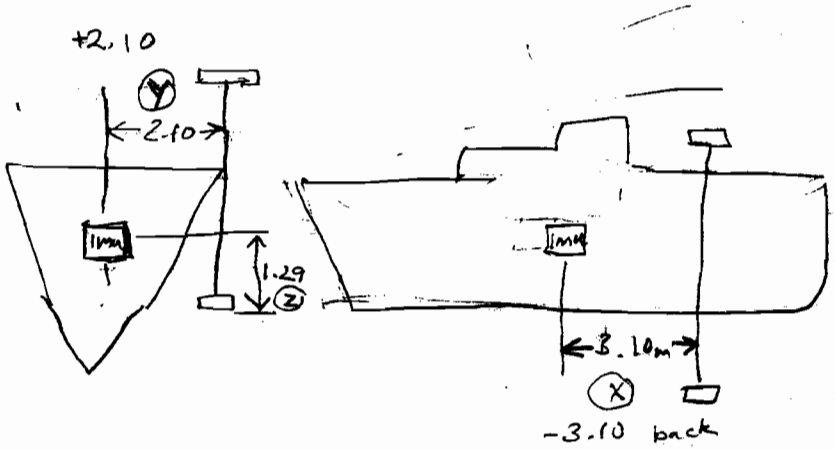

X = -3.10 ducer head from F190 (back)
Y = 2.10 ducer head right of F190
Z = 1.29 ducer head down from F190

AC coupled

FILL OUT THE DIAGRAM TO SHOW ACQUISITION GEOMETRY. INCLUDE GPS-TO-SHOT DISTANCE, SLED-TO-SHOT DISTANCE, AND STREAMER-TO-SHOT DISTANCE.

07SCC02

GPS-TO-SHOT DISTANCE 5m

SLED-TO-SHOT DISTANCE _____

STREAMER-TO-SHOT DISTANCE _____

GPS antenna

boomer

streamer

chirp

sidescan

shot

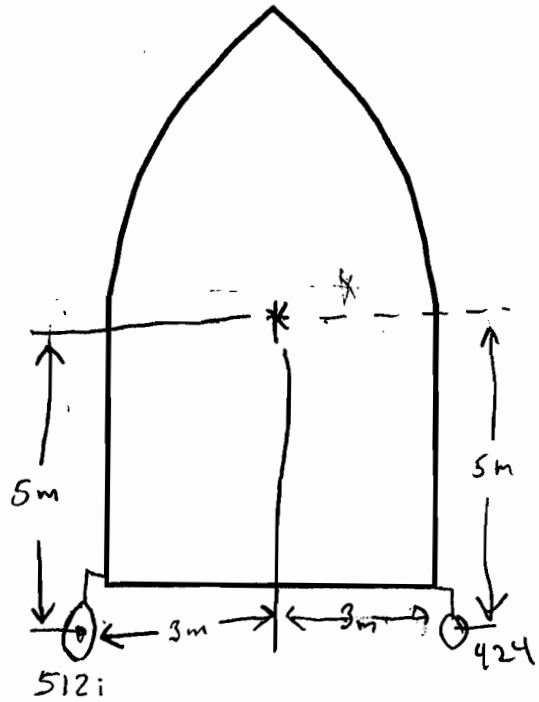

BOOMER EXAMPLE

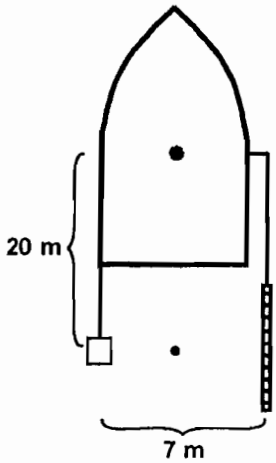
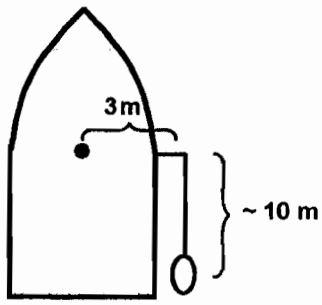
CHIRP EXAMPLE