DATCH TEST PAGE

ACTIVITY ID: OCT 02

USGS CMG FACS OPERATION LOG

EQUIPMENT CODE	ID	START DAY	START HOUR	START MINUTE	START COMMENT	END DAY	END HOUR	END MINUTE	END COMMENT	DEPTH (METERS)
S	Roll1A	078	14	22'07	Patch Test					
	Roll2	078								
	Roll2A	078	14	25						
	Roll3A	078	14	48'E'						
	Roll4A	078	5	55. E						
	Roll5A	078	10	09						
	Roll6A	078	10	22						
	-Recorded & using		MICRODE	.SYS				ISVP CAST 1	Ts 15.49 SA 30-079	
								Surface	1507.1 m/s	
Pack	roll1A				Pack = 001_1421			1m	1505.1 m/s	
	2				002_1420			2m	1502.9 m/s	
	2A				003_1420			3m	1501.5 m/s	
	3A				004_1445			4m	506.5 m/s	
	4A				005A 1456			5m	1507.6 m/s	
	5A				006_1502			6m	1512.1	
	6A				007_1512			7m	1515.1	
								8m	1515.1	
								X = 323846.30		
								Y = 3841402.46		

START of 10 OCT 02 woo hoo!

ACTIVITY ID: 10OCT02

USGS CMG FACS OPERATION LOG

EQUIPMENT CODE	ID	START DAY	START HOUR	START MINUTE	START COMMENT	END DAY	END HOUR	END MINUTE	END COMMENT	DEPTH (METERS)
C	10i01	078	20	39	SOL HYP 45	078		C →	SEGY IBM FLOAT ASCII 0.5→80 KHZ; Power 60% PingRate = 4HZ; ACQ width = 75M	
S	10s01	078	20	39		078				
H	10h01	078	20	39.08		078		S →	455 KHZ, 16Bit DATA; 50m swath	
NOTE	→ USING SXS = MUNRO2 SXS ; NO ROLL CAL included in SXS ; HypNAV Line = 045-1638.INW									
NOTE	→ NOTE that S on Line 10s01 was recorded as SOF not XTF									
C	10i02	078	22	59						
S	10s02		22	59						
H	10H02		22	59						
HYP	045-1758		22	59						
NOTE			22	05	→ passing buoy R12 ~30M offline					
S	10s02A		23		(MUST HAVE problem - DASK DOES NOT RECALL)					
C	10i03	078	23	00	Didn't realize that EOL so close -				this line is JUST SHORT	
S	10s03	078	23	00						
H	10H03	078	23	00						
HYP	045-1859		23	00	EOL HYP 45					
C	10i04	078	23	11	SOL HYP 44					
S	10s04	078	23	11						
H	10H04	078	23	11						
HYP	044-1910	078	23	11						

ACTIVITY ID: 10CCT02

USGS CMG FACS OPERATION LOG

Page ____ of ____

EQUIPMENT CODE	ID	START DAY	START HOUR	START MINUTE	START COMMENT	END DAY	END HOUR	END MINUTE	END COMMENT	DEPTH (METERS)
C	10c05	078	23	59						
S	10s05	078	23	59						
T	10h05	078	23	59						
HYP	44.1459	078	23	59						
NOTE			00	10:26	PASSING BUOY	~ OFF	LINE ~	80 m		
C	10c06	079	01	04	MADE NEW ID DIRECTORY FOR JD079					
S	10s06	079	01	06						
T	10h06	079	01	07						
HYP	44.2103	079	01	04						
C	10c07	079	02	02						
S	10s07	079	02	02						
T	10h07	079	02	02						
HYP	44.2200	079	02	02						
			02		EOL Approach 74					
C	10c08	079	02	22	TURN					
S	10s08	079	02	22	TURN		SHORE	TURNLINE		
T	10h08	079	02	22	TURN					
HYP	43.2229	079	02		TURN					

ACTIVITY ID: 10 OCT 02

USGS CMG FACS OPERATION LOG

EQUIPMENT CODE	ID	START DAY	START HOUR	START MINUTE	START COMMENT	END DAY	END HOUR	END MINUTE	END COMMENT	DEPTH (METERS)
C	10i09	079	02	25	SOL HYPACK 43					
S	10s09	079	02	25						
H	10H09	079	02	25						
HYP	43-2225									
C	10i10	079	03	30						
S	10s10	079	03	00						
H	10h10	079	03	00						
HYP	43.2259	079	03	00						
C	10i11	079	03	59	I see [illegible]					
S	10s11	079	03	59						
H	10h10	079	03	59						
HYP	043_000	079	03	59						
		- PASSED	bouy							
C	10i12	079	05	01	[illegible]					
S	10s12	079	05	01						
H	10h12	079	05	01						
HYP	43_0100	079	05	01						

ACTIVITY ID: 10CCT02

USGS CMG FACS OPERATION LOG

EQUIPMENT CODE	ID	START DAY	START HOUR	START MINUTE	START COMMENT	END DAY	END HOUR	END MINUTE	END COMMENT	DEPTH (METERS)
					EOL Hypack 43	079	05	30		
C	10c13	079	05	40	SOL Hypack #2					
S	10s13	079	05	40						
H	10h13	079	05	40						
Hyp	42_0140	079	05	40						
C	10c14	079	06	00						
S	10s14	079	06	00						
H	10h14	079	06	00						5.7
Hyp	042.0200	079	06	00						
C	10c13	→	Directory Naming Convention Error						"10cct02_SXP\JD080.sgy"	
C	10c15	079	07	00						
S	10s15	079	07	00						
H	10h15	079	07	00						7.4
Hyp	042.0300	079	07	00						

ACTIVITY ID: 10CCT02

USGS CMG FACS OPERATION LOG

EQUIPMENT CODE	ID	START DAY	START HOUR	START MINUTE	START COMMENT	END DAY	END HOUR	END MINUTE	END COMMENT	DEPTH (METERS)
C	10c16	079	08	01						
S	10s16	079	08	01						
* H	X	079	08	01	No data Recorded					
Hyp	042_0400	079	08	01						
					EOL Hypack 42	079	08	23		
C	10c17	079	08	30	SOL HyP 41					
S	10s17	079	08	30						
* H	10h17x	079	08	35	File Naming Error					9.2
Hypack	041_0429	079	08	30						
C	10c18	079	09	00						
S	10s18	079	09	00						
H	10h18	079	09	00						8.0
* Hypack	041_0911	079	09	12	"RTV Sum.exe Error"				Cold Shutdown/Reboot	

ACTIVITY ID: 10CCT02

USGS CMG FACS OPERATION LOG

EQUIPMENT CODE	ID	START DAY	START HOUR	START MINUTE	START COMMENT	END DAY	END HOUR	END MINUTE	END COMMENT	DEPTH (METERS)
C	10c19	079	10	01						
S	10s19	079	10	01						
H	10h19	079	10	01						
Hypack	041_1000	079	10	01						
						079	11	11	EOL HYP 41	
						079	11	25	SVP cast # 2	
* Roll2_1	001_1134	079	11	35	SOP - Patch Test					
Roll2_2	002_1146	079	11	47	* munro3.sxs					
Roll2_3	003_1159	079	12	00						
Roll2_4	004_1209	079	12	10						
Roll2_5	005_1222	079	12	22						
Roll2_6	006_1232	079	12	32						
Roll2_7	007_1242	079	12	43		079	12	55	EOP	
C	10c20	079	13	10	SOL Hyp 40					
S	10s20	079	13	04						
H	10h20	079	13	04						5.0
HyP	040_1304	079	13	04						
* C	10c20				Power not turned on during initial recording.					

ACTIVITY ID: 10CCT02

USGS CMG FACS OPERATION LOG

EQUIPMENT CODE	ID	START DAY	START HOUR	START MINUTE	START COMMENT	END DAY	END HOUR	END MINUTE	END COMMENT	DEPTH (METERS)
C	10c21	079	14	06						
S	10s21	079	14	06						
H	10h21	079	14	06						
HYP	040_1405	079	14	06						
C	10c22	079	15	02						
S	10s22	079	15	02						
H	10h22	079	15	02						9.5
HYP	0401501	079	15	02		079	15	38	EOL HYP 40	
C	10c23	079	15	42	SOL HYP 39					
S	10s23	079	15	42						
H	10h23	079	15	42						9.4
HYP	079_1542	079	15	42						
C	10c24	079	16	02						
S	10s24	079	16	02						
H	10h24	079	16	02						8.75
HYP	079_160[illegible]	079	16	02						

ACTIVITY ID: 10CCT02

USGS CMG FACS OPERATION LOG

EQUIPMENT CODE	ID	START DAY	START HOUR	START MINUTE	START COMMENT	END DAY	END HOUR	END MINUTE	END COMMENT	DEPTH (METERS)
C	10c25	079	17	00						
S	10s25	079	17	00						
H	10h25	079	17	00						8.0
HYD	039_1700	079	17	00						
C	10c26	079	18	12	EOL Hypack 39 ; start of channel					
S	10s26	079								
H	10h26	079								
HYP	39_1812	079								
NOTE	This line not planned line ; taking this to Gulfport Ship channel									
C	10c27	079	19	07	→ changed lnefile to Gulfport ship channel.lnw					
S	10s27	079	19	07	→ recording up to the EOL					
H	10h27	079	19	07						
HYP	001_1907	079	19	07						
C	10c28	079	19	31	started new line on middle of channel - the chart is off.					
S	10s28	079	19	31	The middle line of Gulfport channel.lnw is ~40m to the East					
H	10h28	079	19	31	of the "visual" middle of the channel					
HYP	1_1931	079	19	31						

ACTIVITY ID: 10CCT 02

USGS CMG FACS OPERATION LOG

EQUIPMENT CODE	ID	START DAY	START HOUR	START MINUTE	START COMMENT	END DAY	END HOUR	END MINUTE	END COMMENT	DEPTH (METERS)
C	10i29	079	20	02	Still running Gulfport channel North → Middle btw the					
S	10s29	079	20	02	red & green buoys					
H	10H29	079	20	02						
HYP	L2022	079	20	02						
*	So Lines 10*28 & 10*29 are directly between the red & green buoys - this									
	can be considered the baseline of the channel. Not all sides captured → some									
	areas out & some areas shallow & some areas flat									
	winds increasing & weather deteriorating. (Refer to green logbook - GOV issued)									
	for general description of channel captures from swath									
		21	09		EOL					
C	10i30	079	21	17	(this line should be shorter than Swath & SSS)					
S	10s30	079	21	17						
H	10H30	079	21	17						
HYP	L2112	079	21	17	- line down green side of channel					
		-	22	00	- moving East out of Gulfport Channel & into ICW to					
					pull gear					
					winds↑ waves↑					
			23	02	→ Heading to Port for the Night					

ACTIVITY ID: 10CCT02

USGS CMG FACS OPERATION LOG

EQUIPMENT CODE	ID	START DAY	START HOUR	START MINUTE	START COMMENT	END DAY	END HOUR	END MINUTE	END COMMENT	DEPTH (METERS)
NOTE		80	- In Port winds 1 15kts			→ Processed				
NOTE		81	- In Port winds 1 15kts			→ Processed				
NOTE		82	- Depart Dock ~ 0730am; Steaming to Petit Bois Pass & Starting							
			lines from line file 10CCT02_PBP shoreline_HY.LNW							
Note		82			- Deploying Gear					
					- trouble w/ antenna height - got 2 Line					
SVP cast					- Cast 3 366522 · Casting			3340000 = Northing		
C	10C31	82	17	25	Beginning of line for Day					
S	10S31	82	17	25						
H	10H31	82	17	25						
HYP	1-1725	82	17	25	line from line file 10CCT02_PBP shoreline HY.lnw					
			18	03	Vengture off line to go around					
			18	07	- changed chirp depth - pulled up					
					- using roll calibration values in the SXS monroe2 - cal					
					- Default speed of sound 1502 m/s for swath line					
					10H31					
	ALL LINES	18	47		- EOL HYPACK = 00L1725					

ACTIVITY ID: 10CCT02

USGS CMG FACS OPERATION LOG

EQUIPMENT CODE	ID	START DAY	START HOUR	START MINUTE	START COMMENT	END DAY	END HOUR	END MINUTE	END COMMENT	DEPTH (METERS)
C	10:32	82	18	44						
S	10s32	82	18	44						
H	10h32	82	18	44						
Hyp	2-1847	82	18	44	lines from the 10cct02 - PST hiccups Hy. low					
			18	46	SVP back online					
			19	02	Pulling SSS in a couple meters to try & eliminate noise					
					(pulled to gray tape)					
		82	19	21	Coming back onto planned line					
		82	19	28	~15m offline					
* Chirp Note		82	19	53	chirp - layering? GAS?					
		82	19	57						
* Chirp Note		82	20	04	lens? on chirp					
		82	20	08	SOL HYPACK 002-1847					
C	10:33	82	20	09						
S	10s33	82	20	10						
H	10H33	82	20	10						
HY?	3-2013	82	20	10	SOL Hypack 003-2013					
NOTE					- only took this line up to the sand bar/shoal					

ACTIVITY ID: 10CCT 02

USGS CMG FACS OPERATION LOG

EQUIPMENT CODE	ID	START DAY	START HOUR	START MINUTE	START COMMENT	END DAY	END HOUR	END MINUTE	END COMMENT	DEPTH (METERS)
C	10:34	82	20	57						
S	10S34	82	20	57						
H	10H34	82	20	57						
HYP	4_2100	82	20	57	SOL 004-2100 hypack					
		82	21	14	Adjusting cable on chirp				- No change in	5.43M
					chirp depth.					
* SSS		82	21	16	Auto TVG on SSS changed/stuck				& lost screen	
					for a few seconds → May lost				a few seconds	
					of data.					
* Chirp NOTE		82	21	58	changed to chirp on chirp					
* Chirp NOTE		82	21	40	Set max lens/Moved in chirp					
		82	21	43	EOL Hypack 004-2100					
C	10:35	82	21	45						
S	10S35	82	21	45						
H	10H35a	82	21	45						
HYP	5_2148	82	21	45	SOL Hypack 005_2148					[illegible]M
		82	22	35	EOL Hypack 005-2148					

ACTIVITY ID: OCCT02

USGS CMG FACS OPERATION LOG

EQUIPMENT CODE	ID	START DAY	START HOUR	START MINUTE	START COMMENT	END DAY	END HOUR	END MINUTE	END COMMENT	DEPTH (METERS)
C	10:36	82	22	36						
S	10s36	82	22	36						
H	10h36	82	22	36						
HYP	6_2237	82	22	36	SOL Hypack Line 006-2237					~3 m
		82	22	47	trouble w/ Currents pushing boat so occassionally					
					boat [illegible] off line ~15 m					
		82				82	23	25	EOL 36	
C	10:37	82	23	28						
S	10s37	82	23	28						
H	10h37	82	23	28						
Hyp	7_2331	82	23	27	SOL Hypack 007-2331					
					EOL 23					
C	10:38	83	00	22	START OF NEW ID					
S	10s38	83	00	22						
H	10H38	83	00	22						
Hyp	8_0023	83	00	22	SOL Hypack 008_0023					
* Chirp NOTE			00	28	Chirp JUST STARTED recording for this line - raw have					
					missed ~5 minutes					
* Chirp NOTE		83	00	40	gas bubbles or soft sediment in chirp profile??					

* Adjusted Hypack clock to reflect mins off symmetry at end of hypack 008-0023

Note that hypack time is ~4 mins ahead of chirp time

ACTIVITY ID: 10cc+02

USGS CMG FACS OPERATION LOG

EQUIPMENT CODE	ID	START DAY	START HOUR	START MINUTE	START COMMENT	END DAY	END HOUR	END MINUTE	END COMMENT	DEPTH (METERS)
C	10:39	83	01	15						
S	10s39	83	01	15						
H	10h39	83	01	15						
Hyp	9-0114	83	01	15	SOL hypack line 009-0114 to help					
					captain having trouble with turn					
					-(NOTE Line 8.7.6.5 the currents were pushing boat					
					around - having trouble keeping boat online. Doing their					
					best.)					
					- this will RESUME the full length survey lines !!					
chirp NOTE		83	01	56	- channel or layline					
C	10:39.001		02	00	- this chirp line very short - was suppose to be 40					
C	10:40	83	02	00						
S	10:40	83	02	00						
H	10h40	83	02	00						
Hyp	9-0204	83	02	00	Same hypack line					
			02	20	EOL hypack line 09-0204					6.2
C	10:41	83	02	24						6.3
S	10s41	83	02	24						
H	10h41	83	02	24						

Hyp 10-0227 SOL Hypack 10-0227

ACTIVITY ID: 10 OCT 02

USGS CMG FACS OPERATION LOG

EQUIPMENT CODE	ID	START DAY	START HOUR	START MINUTE	START COMMENT	END DAY	END HOUR	END MINUTE	END COMMENT	DEPTH (METERS)
NOTE		83	02	33	- current affecting line					4.5 m
* chirpNote		83	02	53	- dipping beyond or slumping					
		83	02	58	- ~~dipping~~ convex reflector					
C	10:42	83	03	00						
S	10s42	83	03	00						
H	10h42	83	03	00						
Hyp	10_0303	83	03	00	still on same hypack line					10.2
			03	13	- SANDWAVES?				Subsurface feature	
			03	41	EOL Hypack 10_0303					
					(took line ~100m longer to capture chirp)					
C	10:43	83	03	42						
S	10s42	83	03	42						
H	10h43	83	03	42						
Hyp	011_0346	83	03	42	SOL Hypack Line		011_0346			10.2
C	10:44	83	04	03						
S	10s44	83	04	02						
H	10h44	83	04	02						
Hy	11_0406	83	04	02	SAME hypack Line					
		83	04	54	EOL Hypack 11_0406					

ACTIVITY ID: 10cct02

USGS CMG FACS OPERATION LOG

EQUIPMENT CODE	ID	START DAY	START HOUR	START MINUTE	START COMMENT	END DAY	END HOUR	END MINUTE	END COMMENT	DEPTH (METERS)
* SVP CAST 4		83	04	57						6.3M
C	10i45	83	05	00						
S	10s45	83								
H	10h45	83								
HYP	12-0502	83			SOL Hypack Line	12-0502				
		83	05	02	letting out some SSS cable ~ 2m					
C	10i46	083	06	01						
S	10s46	083	06	01						
H	10h46	083	06	01						
HYP	02-0604	083	06	01		083	06	12	EOL Hypack 012	
C	10i47	083	06	13						
S	10s47	083	06	13						
H	10h47	083	06	13						
HYP	03-0607	083	06	13	SOL HYPack 013					

ACTIVITY ID: 10oct02

USGS CMG FACS OPERATION LOG

EQUIPMENT CODE	ID	START DAY	START HOUR	START MINUTE	START COMMENT	END DAY	END HOUR	END MINUTE	END COMMENT	DEPTH (METERS)
C	10i48	083	07	01						
S	10s48	083	07	01						
H	10h48	083	07	01						
Hyp	013_0704	083	07	01			07	22	EOL Hypack 13	
C	10i49	083	07	22						
S	10s49	083	07	22						
H	10h49	083	07	22						
Hyp	014-0726	083	07	22	SOL Hypack 014		08	00	EOL Hypack 014	
C	10i50	083	08	00						
S	10s50	083	08	00						
H	10h50	083	08	00						
Hyp	014_0804	083	08	00						
C	10i51	083	08	33		083	08	30	at end 014	
S	10s51		08	33						
H	10h51		08	33						
Hyp	015-0837		08	33	SOL Hypack 015					

ACTIVITY ID: 10CCT02

USGS CMG FACS OPERATION LOG

EQUIPMENT CODE	ID	START DAY	START HOUR	START MINUTE	START COMMENT	END DAY	END HOUR	END MINUTE	END COMMENT	DEPTH (METERS)
C	10:52	83	09	01			09	00	eol 51	
S	10s52	83	09	01						
H	10h52	83	09	01						
Hyp	15-904	83	09	04	hypack line 15		09	42	at eol	
C	10:53	83	09	46						
S	10s53	83	09	46						
H	10h53	83	09	46						
Hyp	016-0946	83	09	46	hypack line 16		10	00	end of hour	
C	10:54	83	10	00						
S	10s54	83	10	00						
H	10h54	83	10	00						
Hyp	016-1000	83	10	00		083	10	55	1055 eol 16	
C	10:55	83	10	57						
S	10s55	83	10	57						
H	10h55	83	10	57						
Hyp	017-1101	83	10	57	SOL Hypack 17					

ACTIVITY ID: 10CCT02

USGS CMG FACS OPERATION LOG

EQUIPMENT CODE	ID	START DAY	START HOUR	START MINUTE	START COMMENT	END DAY	END HOUR	END MINUTE	END COMMENT	DEPTH (METERS)
C	10:56	83	11	56						
S	10:56	83	12	07	not recording until 1207					
H	10:56	83	11	56			12	15	eol	
Hyp	017_1200	83	11	56						
C	10:57	83	12	17						
S	10:57	83	12	17						
H	10:57	83	12	17	sol 18					
Hyp	018_1220	83	12	17						
C	10:58	083	13	00						
S	10:58	083	13	00						
H	10:58	083	13	00						
Hypnotic	019_1304	083	13	00			13	25	EOL Hyp 19	
C	10:59	083								
S	10:59	083								
H	10:59	083								
Hypnotic	019_1331	084			SOL Hypnotic 019					

ACTIVITY ID: 10cc+02

USGS CMG FACS OPERATION LOG

EQUIPMENT CODE	ID	START DAY	START HOUR	START MINUTE	START COMMENT	END DAY	END HOUR	END MINUTE	END COMMENT	DEPTH (METERS)
C	10i60	83	14	01						
S	10s60	83	14	01						
H	10h60	83	14	01						
Hypack	019-1404	83	14	01	on hypack 19				eol 19	
C	10i61	83	14	52						
S	10s61	83	14	52						
H	10h61	83	14	52						
Hypack	020-1456	83	14	52					CONTINUE CAT HOME TO END OF LINE	
C	10i62	83	16	17						
S	10s62	83	16	17						
H	10h62	83	16	17						
HYPACK	021-1620	83	16	17	SUP CAST					
C	10i63	83	17	01						
S	10s63	83	17	01						
H	10h63		17	01						
HYPACK	021-1704		17	01						

ACTIVITY ID: 10cct 02

USGS CMG FACS OPERATION LOG

EQUIPMENT CODE	ID	START DAY	START HOUR	START MINUTE	START COMMENT	END DAY	END HOUR	END MINUTE	END COMMENT	DEPTH (METERS)
C	10.64	83	17	35	Tight turn onto					
S	10s64	83	17	35	line					
H	10h64	83	17	35						
Hyp	22.1738	83	17	34	on hyperbolic line 22					
C	10.65	83	18	00						
S	10s65	83	18	00						
H	10s65	83	18	00						
Hyp	22.1802	83	18	00	hyperbolic line 22				FOLC 18:47	9.72M
C	10.66	83	18	50						
S	10s66	83	18	50						
H	10h66	83	18	50						
Hyp	23.1852	83	18	50	hyperbolic line 23					11.5M
SSS NOTES			18	54	Let out 4 more meters of SSS cable					12 M
									FOL @ 20:03	

ACTIVITY ID: 10oct02

USGS CMG FACS OPERATION LOG

EQUIPMENT CODE	ID	START DAY	START HOUR	START MINUTE	START COMMENT	END DAY	END HOUR	END MINUTE	END COMMENT	DEPTH (METERS)
C	10i67	83	20	06						
S	10s67	83	20	06						
H	10h67	83	20	06						
Hyp	24_2009	83	20	06	start Hypack line 24				EOL 21:00	
C	10i68	83	21	01						
S	10s68	83	21	01						
H	10h68	83	21	01						
Hyp	24_2104	83	21	01	start Hypack line 24		21	22	EOL	11.7
C	10i69	83	21	27						
S	10s69	83	21	27						
H	10h69	83	21	27						
Hyp	25_2129	83	21	25	SOL Hypack 25					
C	10i70	83	22	04						
S	10s70	83	22	04						
H	10h70	83	22	04						
HYP	25_2208	83	22	04	SOME hypack line 25					11.5m
							22	35	EOL Hypack 25	

ACTIVITY ID: 10cc+02

USGS CMG FACS OPERATION LOG

EQUIPMENT CODE	ID	START DAY	START HOUR	START MINUTE	START COMMENT	END DAY	END HOUR	END MINUTE	END COMMENT	DEPTH (METERS)
C	10i71	83	22	43						
S	10s71	83	22	43						
H	10h71	83	22	43						
Hyp	26.2246	83	22	43	SOL Hypack 26					
C	10i72	83	23	00						
S	10s72	83	23	00						
H	10h72	83	23	00						
Hyp	26.2304	83	23	00	Cont of Hypack line 26					
					Seas getting Rough ↑ 3-5					
							23	59	EOL	12.6
C	10i74	84	00	04	NEW JD					
S	10s74	84	00	04						
H	10h74	84	00	04						
Hyp	27-004	84	00	04	SOL Hypack - 27					13.04
NOTE		~	00	30	Oil Rig structure ON MAP - Captain going around in case there is trouble					

23

*

ACTIVITY ID: 10cc+02

USGS CMG FACS OPERATION LOG

Page 34 of _____

EQUIPMENT CODE	ID	START DAY	START HOUR	START MINUTE	START COMMENT	END DAY	END HOUR	END MINUTE	END COMMENT	DEPTH (METERS)
C	10:74	84	01	01	waves still 3-5					
S	10s74	84	01	01						
H	10h74	84	01	01						
Hyp	27_0105	84	01	01	continuation of hypack line 27					
							01	18	EOL 27	
C	10:75	84	01	19						
S	10s75	84	01	19						
H	10h75	84	01	19						
Hyp.	28_0122	84	01	19	SOL hypack	28				10.9
C	10:76	84	02	00						
S	10s76	84	02	00						
H	10h76	84	02	00						
Hyp	28_204	84	02	00	small Hypack line					
		84	02	06	letting out more line	ON	SSS -	Did	not seem	12M
					to make a difference					
			02	23					EOL 28	

ACTIVITY ID: 10cct02

USGS CMG FACS OPERATION LOG

EQUIPMENT CODE	ID	START DAY	START HOUR	START MINUTE	START COMMENT	END DAY	END HOUR	END MINUTE	END COMMENT	DEPTH (METERS)
C	10:77	84	02	24						
S	10s77	84	02	24						
H	10h77	84	02	24						
Hyp	29.0227		02	24	SOL Hypack 29					13m
C	10:78	84	02	59						
S	10s78	84	02	59						
H	10h78	84	02	59						
Hyp	29.0303				Cont Hypack 29					13m
			03	25					EOL 29	
C	10:79	84	03	29						
S	10s79	84	03	29						
H	10h79	84	03	29						
Hyp	30.0332	84	03	29	SOL Hypack Line 30					~12m
		84	04	21					EOL Hypack 30	

ACTIVITY ID: 10cct02

USGS CMG FACS OPERATION LOG

EQUIPMENT CODE	ID	START DAY	START HOUR	START MINUTE	START COMMENT	END DAY	END HOUR	END MINUTE	END COMMENT	DEPTH (METERS)
C	10i80	84	04	23						
S	10s80	84	04	23						
H	10h80	84	04	23						
Hyp	32-0426				Start of Hypack line 31					
SVP CAST #6										
C	10i81	84	05	26						
S	10s81	84	05	26						
H	10h81	84	05	26						
Hyp	032.0529	84	05	26	Hypack line 32	084	06	19	EOL Hyp 32	
C	10i82	084	06	23						
S	10s82	084	06	23						
H	10h82	084	06	23						
Hyp	033-0626	084	06	23	SOL Hypack 033					

ACTIVITY ID: 10Oct02

USGS CMG FACS OPERATION LOG

EQUIPMENT CODE	ID	START DAY	START HOUR	START MINUTE	START COMMENT	END DAY	END HOUR	END MINUTE	END COMMENT	DEPTH (METERS)
C	10i83	84	07	19		084	08	08		
S	10s83	84	07	19						
H	10h83	84	07	19						
Hyp	034-0722	84	07	19	sol 34 hypack					
C	10i84	84	08	14	SOL 035					
S	10s84	84	08	14						
H	10h84	84	08	14						
Hyp	035-0817	84	08	14		084	09	10	eol 35	
C	10i85	84	09	11	SOL 036					
S	10s85	84	09	11						
H	10h85	84	09	11						
Hyp	036-0914	84	09	11		084	10	00	EOL 036	
C	10i86	084	10	05						
S	10s86	084	10	05						
H	10h86	084	10	05						
Hypack	037-1013	084	10	05	SOL 037					

ACTIVITY ID: 10ct 02

USGS CMG FACS OPERATION LOG

EQUIPMENT CODE	ID	START DAY	START HOUR	START MINUTE	START COMMENT	END DAY	END HOUR	END MINUTE	END COMMENT	DEPTH (METERS)
C	10i87	84	11	00						
S	10s87	84	11	00			11	42	[illegible] freeze	
H	10h87	84	11	00						
Hypack	038-1103	84	11	00	sol 4y 38					
S	10s87a		11	43	restart sweep					
					WRITE TO 10s87a					
C	10i88	84	11	54						
S	10s88	84	11	54						
H	10h88	84	11	54						
HYPACK	039-1157	84	11	59		039	12	47	EOL 039	
C	10i89	84	12	53						
S	10s89	84	12	53						
H	10h89	84	12	53						
HYPACK	040-1257	84	12	53	SOL 040					
C	10i90	84	13	55						
S	10s90	84	13	55						
H	10i90	84	13	55						
HYPACK	041-1359	84	13	55						

ACTIVITY ID: 10ct02

USGS CMG FACS OPERATION LOG

EQUIPMENT CODE	ID	START DAY	START HOUR	START MINUTE	START COMMENT	END DAY	END HOUR	END MINUTE	END COMMENT	DEPTH (METERS)
C	10i91	084	15	12	SOL PBPP					
S	10s91	084	15	12	New hypack file					
H	10h91	084	15	12						
Hyp	001_1515	084	15	12	Hyp 001_1525 - automatic leg switch				start on wrong segment	
C	10i92	84	15	46						
S	10s92	84	15	46						
H	10h92	84	15	46						
Hyp	001-1549	84	15	46	Hyp PBPP line					
		84	16	28	Pulling SSS in	- shallow				
			16	35						
C	10i93	84	16	46						
S	10s93	84	16	46						
H	10h93	84	16	46						
Hyp	001-1650	84	16	46	SOL - turn in shallows					

ACTIVITY ID: 10cc+02

USGS CMG FACS OPERATION LOG

EQUIPMENT CODE	ID	START DAY	START HOUR	START MINUTE	START COMMENT	END DAY	END HOUR	END MINUTE	END COMMENT	DEPTH (METERS)
C	10:94	84	16	53	nearshore -					
S	10:94	84	16	53	turned offshore					
H	10:94	84	16	53	had to pull in					
Hyp	001-1656	84	16	53	equipment					
			17	04	Buoy Rounding					
C	10:95	84	18	02						
S	10s95	84	18	02						
H	10h95	84	18	02						
Hyp	001A1803		18	02	SOL		18	10	EOL	
					-Jog to next line					
C	10:96	84	18	13						
S	10s96	84	18	13						
H	10h96	84	18	13						
Hyp	001-1813	84	18	13	Back online North crossing all					
C	10:97	84	19	22						
S	10s97	84	19	22						
H	10h97	84	19	22						
Hyp	1-1925	84	19	22	turning					

ACTIVITY ID: 10ccf02

USGS CMG FACS OPERATION LOG

EQUIPMENT CODE	ID	START DAY	START HOUR	START MINUTE	START COMMENT	END DAY	END HOUR	END MINUTE	END COMMENT	DEPTH (METERS)
C	10;98	84	19	28						
S	10s98	84	19	28						
H	10h98	84	19	28						
Hyp	01-1932	84	19	28	Back onto Long tie line heading south					
*		(this small line is collecting using the SXS file w/ roll cal & SVP probe)								
C	10;99									
S	10s99									
H	10h99									
Hyp	01-2038		turn							109 M
C	10;100		20	44						
S	10s100		20	44						
H	10h100		20	44						
Hyp	001A2047		20	44	SOL tie line North					
					Turning to next crossing line					

ACTIVITY ID: 10cc102

USGS CMG FACS OPERATION LOG

EQUIPMENT CODE	ID	START DAY	START HOUR	START MINUTE	START COMMENT	END DAY	END HOUR	END MINUTE	END COMMENT	DEPTH (METERS)
C	10c101	84	21	55	recording over					
S	10s101	84	21	55	to next					
H	10h101	84	21	55	crossing line					
Hyp	001_2159									
C	10c102	84	22	07						
S	10s102	84	22	07						
H	10h102	84	22	07						
Hyp	001_2210	84	22	07	furthest west	crossing line heading south &				
			22	37	EOL					
			22	46	CAST 7 & LET SSS out some more length					
						(about + Hmeters)				
C	10c103	84								
S	10s103	84								
H	10h103	84								
Hyp					Transit from last					
					crossing to shore					
					parallel line					

ACTIVITY ID: 10ct02

USGS CMG FACS OPERATION LOG

EQUIPMENT CODE	ID	START DAY	START HOUR	START MINUTE	START COMMENT	END DAY	END HOUR	END MINUTE	END COMMENT	DEPTH (METERS)
C	10i104	84	23	07						
S	10s104	84	23	07						
H	10h104	84	23	07						
Hyp	42.2306				reaquiring shore parallel line start with Hyperd line 42					
C	10i105	85	00	19						
S	10s105	85	00	19						
H	10h105	85	00	19						
Hyp	43.0020				SOL 43	85	01	28	EOL	
C	10i106	85	01	29						
S	10s106	85	01	29						
H	10h106	85	01	29	SOL 44					
Hyp	44.0126	85	01	29	partial trace recorded					
			01	50	letting out line on SSS ≈ 4m					
						85	01	59	EOL	

ACTIVITY ID: 10cct02

USGS CMG FACS OPERATION LOG

EQUIPMENT CODE	ID	START DAY	START HOUR	START MINUTE	START COMMENT	END DAY	END HOUR	END MINUTE	END COMMENT	DEPTH (METERS)
C	10i107	85	01	59						
S	10s107	85	01	59						
H	10h107	85	01	59						
Hyp	44.0159				Inst. Hypack Lo 44		02	41	EOL Hypack 44	15m
C	10i108	85	02	43						
S	10s108	85	02	43						
H	10h108	85	02	43						
Hyp	45-0241		02	42	SOL 45					
C	10i109	85	03	56			05	02	eol	
S	10s109	85	03	55						
H	10h109	85	03	55						
Hyp	46.0354				SOL 46		05	02	CAST	
			04							
C	10i110	85	05	11						
S	10s110	85	05	11						
H	10h110	85	05	11						
Hypack	047-0511	85	05	11						

ACTIVITY ID: 10CCT02

USGS CMG FACS OPERATION LOG

EQUIPMENT CODE	ID	START DAY	START HOUR	START MINUTE	START COMMENT	END DAY	END HOUR	END MINUTE	END COMMENT	DEPTH (METERS)
C	10c 111	85	06	26						
S	10s 111	85	06	26						
H	10h 111	85	06	26						
HYPACK	048-0626	85	06	26						
C	10c 112	85	07	41						
S	10s 112	85	07	41						
H	10h 112	85	07	41	0809 lowered SSS 12'					
HYPACK	049-0741	85	07	41		085	08	51	EOL Hyp 49	
C	10c 113	085	08	57						
S	10s 113	085	08	57						
H	10h 113	085	08	57						12.5
Hypack	050-0857	085	08	57	EOL Hypack 50					
C	10c 114	085	10	19						
S	10s 114	085	10	19						
H	10h 114	085	10	19						
HYPACK	051-1019	085	10	19						

ACTIVITY ID: 10cct02

USGS CMG FACS OPERATION LOG

EQUIPMENT CODE	ID	START DAY	START HOUR	START MINUTE	START COMMENT	END DAY	END HOUR	END MINUTE	END COMMENT	DEPTH (METERS)
C	10i115	085	11	36						
S	10s115	085	11	36						
H	10h115	085	11	36						
HYPACK	052-1136	085	11	36						
C	10i116	085	12	55						
	10s116	85	12	55						
	10h116	85	12	55						
	053_1254	85	12	55	sil hy 53					
C	10i117	85	14	07						
S	10s117	85	14	07						
H	10h117	85	14	07						
HYPACK	054-1407	85	14	07						
C	10i118	85	15	17						
S	10s118	85	15	17						
H	10h118	85	15	17						
HYPACK	055-1517	85	15	17						

ACTIVITY ID: 10 oct 02

USGS CMG FACS OPERATION LOG

EQUIPMENT CODE	ID	START DAY	START HOUR	START MINUTE	START COMMENT	END DAY	END HOUR	END MINUTE	END COMMENT	DEPTH (METERS)
C	10c 119	85	16	26						
S	10s 119	85	16	26						
H	10h 119	85	16	26						
Hypack	056-1626	85	16	26			17	37	EOL 56	
C	10i 120	85	17	40						
S	10s 120	85	17	40						
H	10h 120	85	17	40						
Hyp	057-1740		17	40	SOL Hypack L57		18	45	EOL Hypack	
C	10i 121	85	18	49						
S	10s 121	85	18	49						
H	10h 121	85	18	49						
Hyp	58_1849	85	18	49	SOL 58_1849		19	51	EOL 58	
C	10i 122	85	19	55						
S	10s 122	85	19	55						
H	10h 122	85	19	55						
Hyp	59A1952	85	19	55	SOL 59 hypack					
							20	54	EOL 59	

ACTIVITY ID: 10oct02

USGS CMG FACS OPERATION LOG

EQUIPMENT CODE	ID	START DAY	START HOUR	START MINUTE	START COMMENT	END DAY	END HOUR	END MINUTE	END COMMENT	DEPTH (METERS)
C	10i123	85	20	58						
S	10s123	85	20	58						
H	10h123	85	20	58						
Hyp	60-2056	85	20	54	SOL 60		21	57	EOL 60	15m
C	10i124	85	21	59						
S	10s124	85	21	59						
H	10h124	85	21	59						
Hyp	61-2156	85	21	59	SOL 61					
C	10i125	85	22	55						
S	10s125	85	22	55						
H	10h125	85	22	55						
Hyp	62-2253			54	SOL 62		23	44	EOL 62	
C	10i126	85	23	48						
S	10s126	85	23	48						
H	10h126	85	23	48						
Hyp	63-2345				SOL 63		40		EOL	

ACTIVITY ID: 10cc402

USGS CMG FACS OPERATION LOG

EQUIPMENT CODE	ID	START DAY	START HOUR	START MINUTE	START COMMENT	END DAY	END HOUR	END MINUTE	END COMMENT	DEPTH (METERS)
C	10i127	85	41	55	New Linefile					
S	10s127	85	41	55	2010 MsCIP_EW connect line 2.1nW					15m
H	10h127	85	41	55						
Hyp	001_0039	85	41	55					EOL 001 segment 1	
C	10i128	86	01	20						
S	10s128	86	01	20						
H	10h128	86	01	20						
Hyp	1_0114	86	01	15	SOL segment 2	01	49		EOL segment 2	
C	10i129	86	01	56						
S	10s129	86	01	56						
H	10h129	86	01	56						
Hyp	01_0148	86	01	56	SOL segment 3				EOL segment 3	11m
C	10i130	86	02	56						
S	10s130	86	02	56						
H	10h130	86	02	56	SOL segment 4					

HYP 001_0249

ACTIVITY ID: 10cct02

USGS CMG FACS OPERATION LOG

EQUIPMENT CODE	ID	START DAY	START HOUR	START MINUTE	START COMMENT	END DAY	END HOUR	END MINUTE	END COMMENT	DEPTH (METERS)
C	10i131	86	03	40						
S	10s131	86	03	40						
H	10h131	86	03	40						
Hyp	00L0249	86	03	40	continuation of hyprecall 00L0249					
			04	05	Pulling up Chirp + Sidescan - slowing down					
			04	07	turning west to avoid shallow					
C	10i132	86	04	40	turning onto line					
S	10s132	86	04	43						
H	10L32	86	04	43						
Hyp	00130443	86	04	43	SOL New segment					
			04	37	lowered sidescan 3.5m					
C	10i133	86	05	39						
S	10s133	86	05	39						
H	10h133	86	05	39			06	00	EOL	
Hyp	00130443				continuation of hyprecall					

ACTIVITY ID: 10oct02

USGS CMG FACS OPERATION LOG

Page 40 of _____

EQUIPMENT CODE	ID	START DAY	START HOUR	START MINUTE	START COMMENT	END DAY	END HOUR	END MINUTE	END COMMENT	DEPTH (METERS)
C	101134	86	06	00	continue					
S	105134	86	06	00	same line					
H	106134	86	06	00						
Hyp	001-0600	86	06	00			06	30	EOL hypack	
C	101135	86	06	34	turning					
S	105135	86	06	34	continue on					
H	106135	86	06	34	same line					
Hyp	001-0632	86	06	34						
C	101136	86	07	30						
S	105136	86	07	30						
H	106136	86	07	30						
HYPACK	001-0730	86	07	30	new line segments				[illegible]	
[illegible]	[illegible]	[illegible]	[illegible]		[illegible]					
[illegible]	[illegible]	[illegible]	[illegible]		[illegible]					
[illegible]	[illegible]	[illegible]	[illegible]	[illegible]	[illegible]					
[illegible]	[illegible]	[illegible]	[illegible]	[illegible]	[illegible]					
							17	10	EOL	

ACTIVITY ID: 10oct02

USGS CMG FACS OPERATION LOG

Page 4 of _____

EQUIPMENT CODE	ID	START DAY	START HOUR	START MINUTE	START COMMENT	END DAY	END HOUR	END MINUTE	END COMMENT	DEPTH (METERS)
C	10:138		17	12						
S	10s138		[illegible]	12						
L	10h138		17	12						
Hyp	000-1700		[illegible]	12	SOL gulfport					
					Ship channel					
					heading North on Red Bed Return staying inside the markers					
			17	16	Pulling SSS in → 3m					
					SXS → MUNROE 2_Cal 1			does Not have SVP		
C	10:139	86	18	00						
S	10s139	86	18	00						
L	10h139	86	18	00						
Hyp	000-1800	86	18	00	Still heading North					
			19	07	Hypack minimize					
C	10:140	86	19	06						
S	10s140	86	19	06						
L	10h140	86	19	06						
Hypack	000-1900		19	08	(Hypack Reboot)					

Surveying line 000-1900 down centerline
001-1916

ACTIVITY ID: 10oct02

USGS CMG FACS OPERATION LOG

EQUIPMENT CODE	ID	START DAY	START HOUR	START MINUTE	START COMMENT	END DAY	END HOUR	END MINUTE	END COMMENT	DEPTH (METERS)
NOTES for Hypack above – I used landing shapefile from previous channel Day 79										
but computer locked up & had to reboot. Finally – Manually the shapefile loaded – SD										
turned off the chart & made the captain survey btw the center line 10h29 from JD 79 & the										
Line hugging the red markers of day 086										

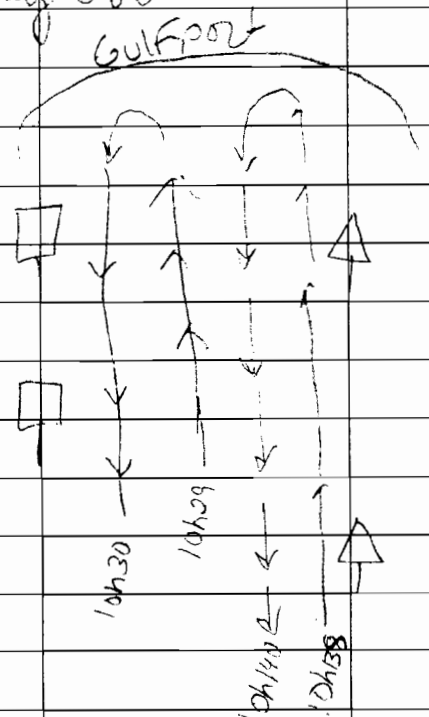

ACTIVITY ID: _____ **USGS CMG FACS OPERATION LOG** Page 45 of _____

EQUIPMENT CODE	ID	START DAY	START HOUR	START MINUTE	START COMMENT	END DAY	END HOUR	END MINUTE	END COMMENT	DEPTH (METERS)
		86								
		86								
		86								
		86								
C	10i142	86	21	05	10i142 (may be very short					
S	10s142	86	21	05						
L	10h142	86	21	05						
Hyp	001-2103	86	21	05						
Hyp	001-2141	86	21	41	This line & portion of other END of 142 is out of channel due to miscommunication btw bridge & lab.					
C	10i143									
S	10s143									
H	10h143									
Hyp	001-2141	86	21	41	EOL in channels					

ACTIVITY ID: 10CCL02

USGS CMG FACS OPERATION LOG

EQUIPMENT CODE	ID	START DAY	START HOUR	START MINUTE	START COMMENT	END DAY	END HOUR	END MINUTE	END COMMENT	DEPTH (METERS)
C	10i145	86	23	04						
S	10s145	86	23	04						
H	10h145	86	23	04						
Hyp	38-2301	86			SOL Line 38 by line file					
Chirp Note			23	08	Chirp red dot set in record BUT no line was let					
					out or in. Just a small turn as part of line 38					
					Started Line 38 from A-Mainsection-West-fwd vertices. In w					
					in channel & heading EAST!					
C	10i146	87	00	00						
S	10s146	87	00	00						
H	10h146	87	00	00						
Hyp	38D001	87	00	00	still on hypack Line		38			11.3
							00	22	EOL 38	
C	10i147	87	00	25						
S	10s147	87	00	25						
H	10h147	87	00	25						
Hyp	037_0025		00	25	SOL Line 37					

ACTIVITY ID: 10cct02

USGS CMG FACS OPERATION LOG

EQUIPMENT CODE	ID	START DAY	START HOUR	START MINUTE	START COMMENT	END DAY	END HOUR	END MINUTE	END COMMENT	DEPTH (METERS)
C	10i148	87	01	01						
S	10s148	87	01	01						
H	10h148	87	01	01						
Hyp	037-0100		01	01	continue Line 37					
C	10i149	87	02	00						
S	10s149	87	02	00						
H	10h149	87	02	00						
Hyp	037-0200	87	02	00	continue Line 37		02	38	EOL 37	
C	10i150	87	02	41						
S	10s150	87	02	41						
H	10h150	87	02	41						
Hyp	036-0240	87	02	41	SOL Line 36					
C	10i151	87	04	03						
S	10s151	87	04	03						
H	10h150	87	04	03	continuation of Line 36					
	36-0403	87								

ACTIVITY ID: 10CCT02

USGS CMG FACS OPERATION LOG

EQUIPMENT CODE	ID	START DAY	START HOUR	START MINUTE	START COMMENT	END DAY	END HOUR	END MINUTE	END COMMENT	DEPTH (METERS)
C	10c152	87	05	14						
S	10s152	87	05	14						
H	10h152	87	05	14						
HYPACK	035-0514	87	05	14	CAST 06					
C	10c153	87	06	00						
S	10s153	87	06	00						
H	10h153	87	06	00	same track line as above					
Hypack	035-0600	87	06	00						
C	10c154	87	06	38						
S	10s154	87	06	38						
H	10h154	87	06	38						
HYPACK	035-0638	87	06	38	NEW LINE SEGMENT					
C	10c155	87	07	04						
S	10s155	87	07	04						
H	10h155	87	07	04						
HYPACK	035-0704	87	07	04			07	49	eol	

ACTIVITY ID: 10Oct02

USGS CMG FACS OPERATION LOG

EQUIPMENT CODE	ID	START DAY	START HOUR	START MINUTE	START COMMENT	END DAY	END HOUR	END MINUTE	END COMMENT	DEPTH (METERS)
C	10c156	87	07	51						
S	10s156	87	07	51						
H	10h156	87	07	51						
HYPACK	039-0751	87	07	51	START LINE 39					
C	10c157	87	08	55						
S	10s157	87	08	55						
H	10h157	87	08	55						
HYPACK	039-0855	87	08	55	NEW LINE STARTED					
C	10c158	87	10	05						
S	10s158	87	10	05						
H	10h158	87	10	05						
HYPACK	018-1005	87	10	05	START NEW SET LINES					
C	10c159	087	11	01						
S	10s159	087	11	01						
H	10h159	087	11	01						
Hypack	018_1101	087	11	01						

ACTIVITY ID: 10Oct02

USGS CMG FACS OPERATION LOG

EQUIPMENT CODE	ID	START DAY	START HOUR	START MINUTE	START COMMENT	END DAY	END HOUR	END MINUTE	END COMMENT	DEPTH (METERS)
C	10i160	87	11	48						
S	10e160	87	11	48						
H	10h160	87	11	48						
HYPACK	017-1148	87	11	48	START LINE 17					
C	10i161	87	13	31						
S	10e161	87	13	31						
H	10h161	87	13	31						
HYPACK	016-1331	87	13	31	START LINE 16					
C	10i162	087	14	08						
S	10s162	087	14	08						
H	10h162	087	14	08						
Hypack	016_1408	087	14	08						
C	10i163	87	15	01						
S	10s163	87	15	01						
H	10h163	87	15	01						
HYPACK	015-1501	87	15	01	START LINE 15					

ACTIVITY ID: 10Oct02

USGS CMG FACS OPERATION LOG

EQUIPMENT CODE	ID	START DAY	START HOUR	START MINUTE	START COMMENT	END DAY	END HOUR	END MINUTE	END COMMENT	DEPTH (METERS)
C	10i 164	87	16	00						
S	10s 164	87	16	00						
H	10h 164	87	16	00						
HYPACK	015-1600	87	16	00	EOL 015	087	16	40		
C	10i 165	087	16	41						
S	10s 165	087	16	41						
H	10h 165	087	16	41						
Hypac	014 1642	087	16	41	SOL 014					
C	10i 166	87	17	00						
S	10s 166	87	17	00						
H	10h 166	87	17	00						
HYPACK	014-1700	87	17	00			18	18	EOL 14	
C	10i 167	87	18	19						
S	10s 167	87	18	19						
H	10h 167	87	18	19						
Hypac	013-1819	87	18	19	SOL 13					

ACTIVITY ID: 10cct02

USGS CMG FACS OPERATION LOG

EQUIPMENT CODE	ID	START DAY	START HOUR	START MINUTE	START COMMENT	END DAY	END HOUR	END MINUTE	END COMMENT	DEPTH (METERS)
c	10i168	87	19	02						
s	10s168	87	19	02						
h	10h168	87	19	02						
Hyp	13-1901	87	19	02	continuation of Line		13			
							19	54	EOL 13	
c	10i169	87	19	57						
s	10s169	87	19	57						
h	10h169	87	19	57						
Hyp	012-1956	87	19	57	SOL 12					11m
c	10i170	87	21	01						
s	10s170	87	21	01						
h	10h170	87	21	01						
Hyp	012-2101	87	21	01	continuation Line	12	21	26	EOL 12	11m
c	10i	87	21	30						
s	10s	87	21	30						
h	10h	87	21	30						
Hyp	011-2129	87	21	30	SOL 12					

ACTIVITY ID: 10CCT02

USGS CMG FACS OPERATION LOG

EQUIPMENT CODE	ID	START DAY	START HOUR	START MINUTE	START COMMENT	END DAY	END HOUR	END MINUTE	END COMMENT	DEPTH (METERS)
c	10i172	87	21	59						
s	10s172	87	21	59						
h	10h172	87	21	59						
hyp	11-2158	87	21	59	continuation of Line 11.		22	56	EOL 11	11 m
c	10.173	87	22	58						
s	10s173	87	22	58						
h	10h173	87	22	58						
hyp	10-2257	87	22	58	SOL 10					
			23	04	Left out 2m of Line on chirp					
						88	00	14	EOL 10	
c	10i174	88	00	18	New JD					
s	10s174	88	00	18						
h	10h174	88	00	18						
hyp	09 0018	88	00	18	SOL 09	WAVES ↑↑			winds ~21 Kts	
c	10i175	88	01	02						
s	10s175	88	01	02						
h	10h175	88	01	02	continuation					

hyp 09_0100 01 35 EOL 9

ACTIVITY ID: 10cc102

USGS CMG FACS OPERATION LOG

EQUIPMENT CODE	ID	START DAY	START HOUR	START MINUTE	START COMMENT	END DAY	END HOUR	END MINUTE	END COMMENT	DEPTH (METERS)
c	10i176	88	01	41						
s	10s176	88	01	41						
h	10h176	88	01	41						
Hyp	08-0140	88	01	41	SOL 8		02	44	EOL	
c	10i177	88	02	45						
s	10s177	88	02	45						
h	10h177	88	02	45						
Hyp	07-0243	88	02	45	SOL 7	88	03	41	EOL	10m
c	10i178	88	03	43						
s	10s178	88	03	43						
h	10h178	88	03	43						
Hyp	006-0343	88	03	43	SOL 6		04	40	EOL 6	9m
c	10i179	88	04	40						
s	10s179	88	04	40						
h	10h179	88	04	40						
Hyp	05-0438	88	04	40	SOL 5				EOL 5	

ACTIVITY ID: 10cc+02

USGS CMG FACS OPERATION LOG

EQUIPMENT CODE	ID	START DAY	START HOUR	START MINUTE	START COMMENT	END DAY	END HOUR	END MINUTE	END COMMENT	DEPTH (METERS)
C	10c180	88	05	18						
S	10s180	88	05	18						
h	10h180	88	05	18						
Hyp	004_0518	88	05	18	SOL Line 4					
C	10c181	88	05	57						
S	10s181	88	05	57						
H	10h181	88	05	57						
Hyp	003_0557				SOL 3					
C	10c182	88	06	32						
S	10s182	88	06	32						
H	10h182	88	06	32						
HYPACK	002-0632	88	06	32	SOL 2					
C	10c183	88	07	01						
S	10s183	88	07	01						
H	10h183	88	07	01						
HYPACK	001-0701	88	07	01	SOL 1				EOL of main supplement survey, head to Dog keys Pass	

ACTIVITY ID: 10Oct02

USGS CMG FACS OPERATION LOG

EQUIPMENT CODE	ID	START DAY	START HOUR	START MINUTE	START COMMENT	END DAY	END HOUR	END MINUTE	END COMMENT	DEPTH (METERS)
C	10:184	88	07	24	Sol SE of Dockers Pass					
S	10s184	88	07	24	additional lines east					
H	10h184	88	07	24	of main survey					
HYP	009-724	88	07	24	Hypack file DKP LINE 5					
C	10:185	88	07	47	Turning onto					
S	10s185	88	07	47	E-W lines					
H	10h185	88	07	47						
HYP	008-0747	88	07	47						
C	10:186	88	08	44						
S	10s186	88	08	44						
H	10h186	88	08	44						
HYPACK	007-0844	88	08	44	Sol 7					
C	10:187	88	09	47						
S	10s187	88	09	47						
H	10h187	88	09	47						
HYPACK	006-0947	88	09	47	Sol 6					

ACTIVITY ID: 10ccTp2

USGS CMG FACS OPERATION LOG

EQUIPMENT CODE	ID	START DAY	START HOUR	START MINUTE	START COMMENT	END DAY	END HOUR	END MINUTE	END COMMENT	DEPTH (METERS)
C	10c 188	88	10	43						
S	10s 188	88	10	43						
H	10h 188	88	10	43						
HYPACK	005-1043	88	10	43	SOL 5					
C	10c 189	88	11	44						
S	10s 189	88	11	44						
H	10h 189	88	11	44						
HYPACK	004-1144	88	11	44	SOL 4					
C	10c 190	88	12	38						
S	10s 190	88	12	38						
H	10h 190	88	12	38						
HYPACK	003-1238	88	12	38	SOL 3					
C	10c 191	88	13	39						
S	10s 191	88	13	39						
H	10h 191	88	13	39						
HYPACK	002-1339	88	13	35	SOL 2					

ACTIVITY ID: Dect#2

USGS CMG FACS OPERATION LOG

EQUIPMENT CODE	ID	START DAY	START HOUR	START MINUTE	START COMMENT	END DAY	END HOUR	END MINUTE	END COMMENT	DEPTH (METERS)
C	10.192	88	14	29	Nearshore Hora	55				
S	10/192	88	14	29	w.d. 75 m					
H	10/192	88	14	29						
Hypack	001_M28	88	14	29	END					

10 CCT 02

FILL OUT THE DIAGRAM TO SHOW ACQUISITION GEOMETRY. INCLUDE GPS-TO-SHOT DISTANCE, SLED-TO-SHOT DISTANCE, AND STREAMER-TO-SHOT DISTANCE.

GPS-TO-SHOT DISTANCE _____

SLED-TO-SHOT DISTANCE _____

STREAMER-TO-SHOT DISTANCE _____

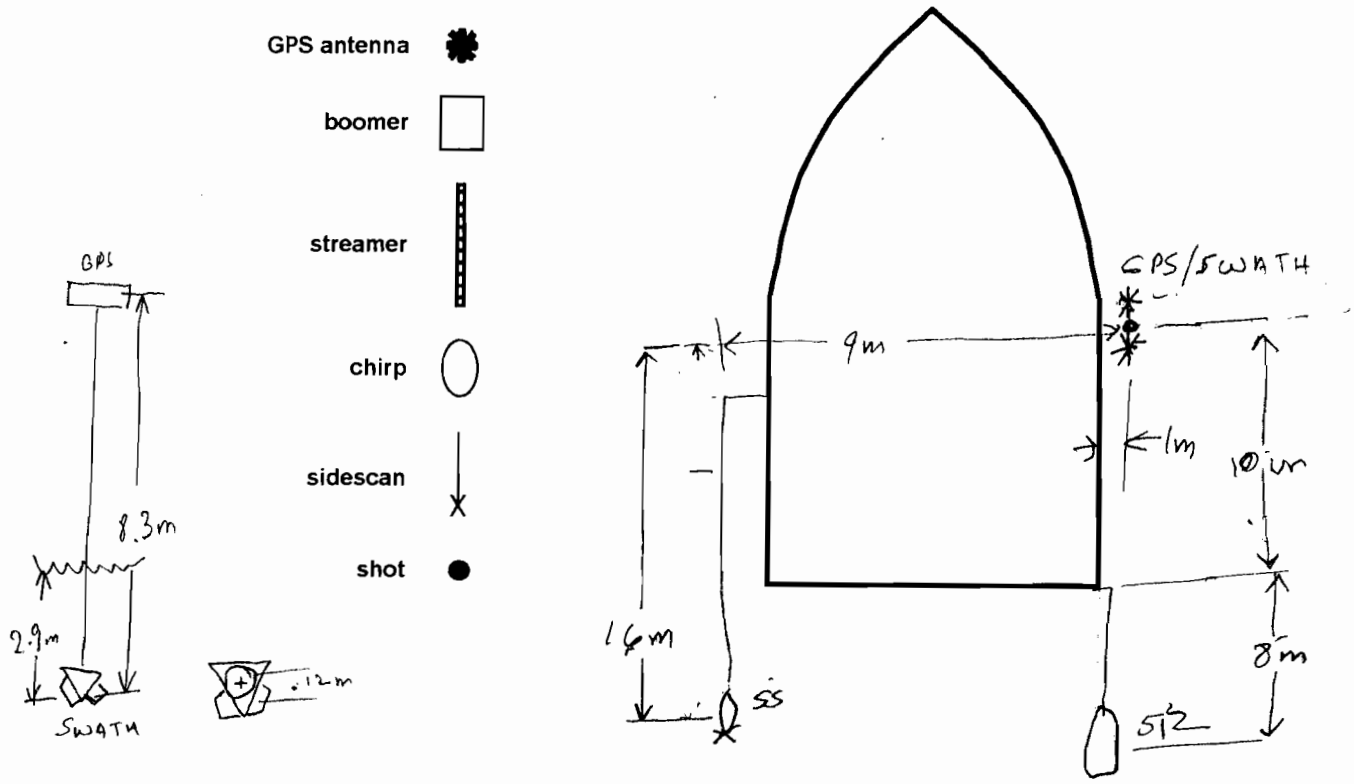

BOOMER EXAMPLE

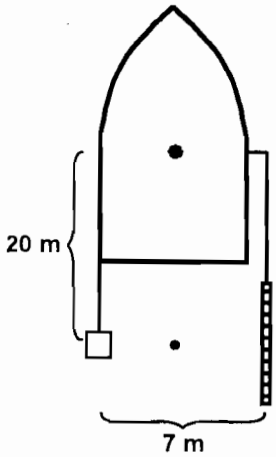
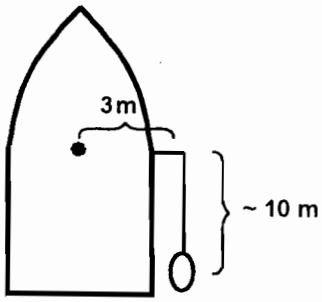
CHIRP EXAMPLE