DEPARTMENT OF THE INTERIOR
UNITED STATES GEOLOGICAL SURVEY

Prepared in cooperation with the
COLORADO DEPARTMENT OF NATURAL RESOURCES
DIVISION OF WATER RESOURCES
OFFICE OF THE STATE ENGINEER

WATER-RESOURCES INVESTIGATIONS
OPEN-FILE REPORT 80-12
SHEET 2 OF 2

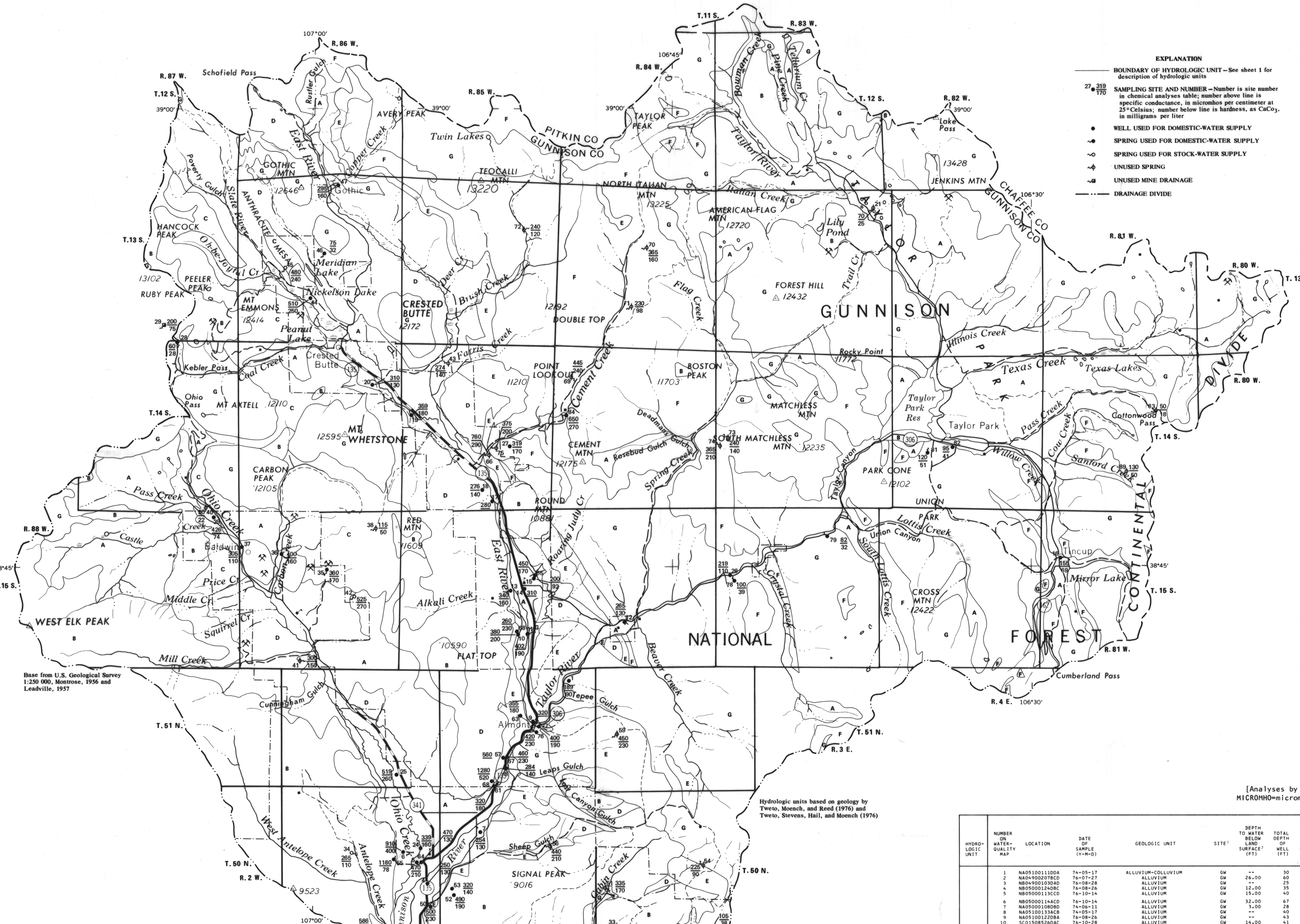

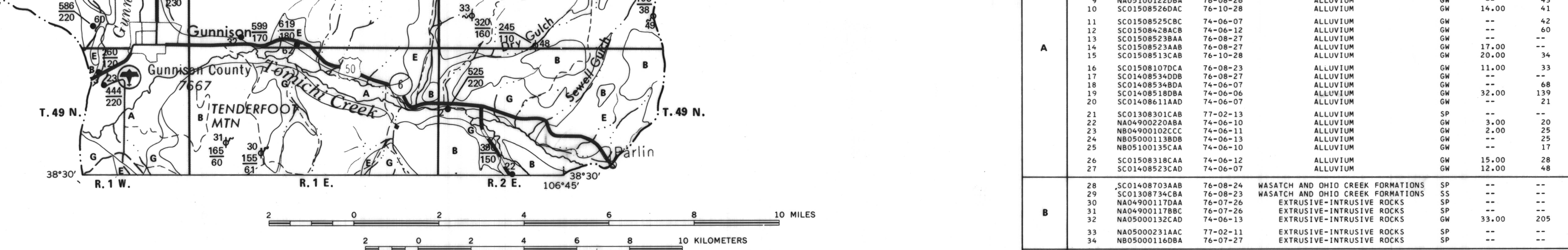

WATER-QUALITY MAP

QUALITY OF GROUND WATER

The quality of ground water in the study area is variable and dependent, in part, on rock type (water-quality map and table of chemical analyses). Water from all hydrologic units is primarily a calcium magnesium bicarbonate type because of the abundance of granitic-rock fragments which weather to produce calcium ions and volcanic rocks which contain ferro-magnesium minerals, and because of the presence of calcium carbonate as a cement in most of the sandstones and conglomerates. Two wells completed in the Dakota Sandstone (hydrologic unit E) contained calcium sulfate and sodium bicarbonate waters. Calcium sulfate waters can occur where water in the aquifer has been in contact with gypsum, organic materials, or coals. Calcium bicarbonate and calcium sulfate type waters are changed to sodium bicarbonate waters when they contact clays or weathered shales. Calcium ions readily exchange with sodium ions present in the clays and weathered shales.

The quality of water in alluvial aquifers (hydrologic unit A) is dependent primarily on the type of material that was eroded and deposited as alluvium. Water quality is also affected by the underflow of ground water from adjacent bedrock aquifers. All samples collected from the alluvial aquifers are calcium bicarbonate waters and, for the most part, the alluvium is composed of material eroded from sandstones, granitic rocks, or reworked shale. Ground water discharged from hydrologic unit D to the alluvial aquifer also may produce this type of water. Dissolved-solids concentrations of the water sampled from hydrologic unit A ranged from 47 to 533 mg/L (milligrams per liter), and hardness from 25 to 400 mg/L. Concentrations of iron, manganese, and dissolved solids locally exceed recommended standards for drinking water (U.S. Environmental Protection Agency, 1977).

The bedrock aquifers (hydrologic units B to G) primarily contain calcium magnesium bicarbonate waters with a wide range of dissolved-solids concentration. Hydrologic unit E has the greatest diversity in quality with concentrations of dissolved solids ranging from 57 to 829 mg/L (water-quality map and table of chemical analyses). Percolation of water through the coal beds of the Dakota Sandstone, organic shales of the Morrison Formation, and the Entrada Sandstone contributes to the relatively large concentrations of iron and manganese in water from these aquifers.

Hardness values for all samples collected are presented on the water-quality map. The bedrock aquifers may contain concentrations of iron, manganese, and dissolved solids in excess of those recommended by the U.S. Environmental Protection Agency (1977) for drinking water. Locally, concentrations of fluoride and selenium may occur in excess of mandatory standards for drinking water established by the Colorado Department of Health (1977) and the U.S. Environmental Protection Agency (1976).

SYSTEM OF NUMBERING WELLS AND SPRINGS

The location numbers in the table of ground-water analyses indicate the well or spring location on the map. The numbers are based on the U.S. Bureau of Land Management system of land subdivision, and show the location of the well by quadrant, township, range, section, and position within the section. A graphic illustration of this method of well or spring location is shown below. The first letter "S" preceding the location number means that the site is located in the area governed by the sixth principal meridian; "N", the New Mexico principal meridian. The second letter indicates the quadrant in which the well or spring is located. Four quadrants are formed by the intersection of the base line and the principal meridian--A indicates the northeast quadrant, B the northwest, C the southwest, and D the southeast. The first three numbers indicate the township, the next three numbers indicate the range, and the last two numbers indicate the section in which the site is located. The letters following the section number locate the well or spring within the section. The first letter denotes the quarter section, the second the quarter-quarter section, and the third the quarter-quarter-quarter section. The letters are assigned within the section in a counterclockwise direction, beginning with (A) in the northeast quarter. Letters are assigned within each quarter section and within each quarter-quarter section in the same manner. Where two or more locations are within the smallest subdivision, consecutive numbers beginning with 1 are added in the order in which the wells or springs were inventoried. For example, SC01308615CBC1 indicates a well or spring in the southwest quarter of the northwest quarter of the southwest quarter of sec. 15, T. 13 S., R. 86 W.

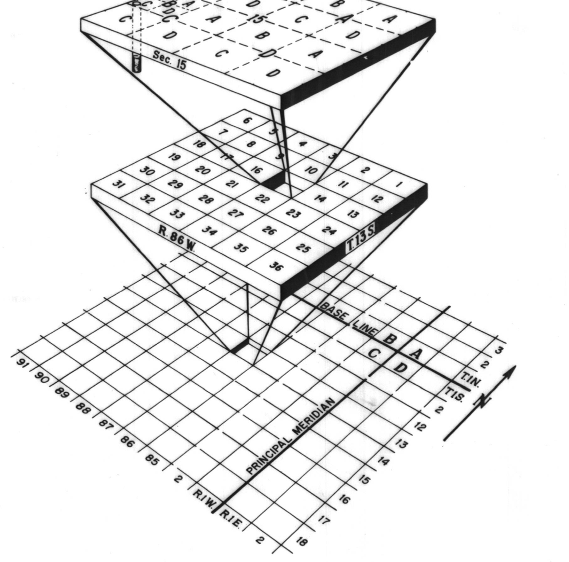

GROUND-WATER MOVEMENT

Ground water in the study area occurs both under water-table (unconfined) and artesian (confined) conditions. Water-table conditions predominate in all the hydrologic units where they are exposed or crop out at the land surface. Artesian conditions occur where sandstones of hydrologic units C, E, and F are overlain and confined by shales, principally in the western one-third of the study area.

Ground-water movement in the aquifers under water-table conditions is controlled primarily by the geometry and permeability of the aquifers, by the amount of precipitation on the recharge areas, and by the degree of hydraulic connection with streams and underlying confined sandstone aquifers. Recharge to all the water-table aquifers occurs principally in the spring from infiltration of snowmelt, precipitation, and streamflow. Alluvium along Ohio Creek and the East and Gunnison Rivers also is recharged by leakage from irrigation canals and ditches, and along Ohio Creek and the East River by upward flow from the underlying hydrologic units B and D. In parts of the study area, underflow from sandstone aquifers in hydrologic units C, E, and F is an additional source of recharge to the alluvium.

Discharge from the alluvium is mainly to streams where the water table intersects the land surface and to underlying aquifers in hydrologic units B to E in the south-central part of the study area. Discharge from hydrologic units B and C is mainly underflow to stream valleys. Discharge from hydrologic unit D is principally to adjacent hydrologic units and is limited because a regional water table probably does not exist in the unit. The occurrence of ground water in hydrologic unit D is localized and restricted to shallow depths due to limited fracture porosity. Discharge from hydrologic units E and F in the outcrop areas and from hydrologic unit G also is mainly to stream valleys.

Ground water is discharged from numerous springs in the study area. The abundance of springs throughout the area indicates that, in many places, water-table aquifers consisting of coarse, relatively permeable material overlie relatively impermeable rocks, resulting in springs occurring at the contact. Springs also occur where the water-table aquifers are fractured, allowing water to flow to the land surface.

Ground water is under confined conditions in some of the sandstones of hydrologic units C, E, and F. The direction of ground-water flow is controlled primarily by the pattern of hydraulic gradients in the aquifer, which is, in turn, affected by the hydrogeologic characteristics of the aquifer, by the regional geologic structure, and by relative elevation differences between the recharge and discharge areas. In areas along the East and the Gunnison Rivers, the regional dip of the rock units and the regional ground-water flow is generally to the west and southwest.

In the southern part of the study area, recharge to the confined aquifers also is from leakage of water from the overlying volcanic material and, in the central and western parts, from leakage of water from hydrologic unit D.

Discharge from the confined aquifers principally occurs as underflow to the west and southwest out of the study area. Locally, in the southern part of the study area, discharge from the confined aquifers can occur where the sandstones of hydrologic unit E are faulted extensively--perennial springs flow in places where the faults extend to the land surface.

Gain-and-loss measurements conducted along the Taylor River indicate an infiltration loss of about 30 ft^3/s in a distance of about 1 mi where the Taylor River crosses dipping sandstones of hydrologic unit E. This represented 11 percent of the flow in the Taylor River at the time of the measurements. Cement and Copper Creeks, as well as other principal streams, are assumed to lose water where crossing dipping strata of hydrologic unit E.

SELECTED REFERENCES

Brock, M. R., and Barker, Fred, 1972, Geologic map of the Mount Harvard quadrangle, Chaffee and Gunnison Counties, Colorado: U.S. Geological Survey Geologic Quadrangle Map GQ-952.
Colorado Department of Health, 1977, Primary drinking water regulations for the State of Colorado: Denver, 60 p.
Eldridge, C. A., 1957, Manitou, Harding, Fremont, and Leadville Formations of northeast Gunnison County, Colorado: Lexington, Ky., University of Kentucky, unpublished M.S. thesis, 60 p.
Gaskill, D. L., and Godwin, L. H., 1966, Geologic map of the Marcellina Mountain quadrangle, Gunnison County, Colorado: U.S. Geological Survey Geologic Quadrangle Map GQ-511.
Gaskill, D. L., Godwin, L. H., and Mutschler, F. E., 1967, Geologic map of the Oh-Be-Joyful quadrangle, Gunnison County, Colorado: U.S. Geological Survey Geologic Quadrangle Map GQ-578.
Goddard, E. N., 1936, Geology and ore deposits of the Tin Cup district: Colorado Science Society Proceedings, v. 13, p. 551-595.
Hedlund, D. C., and Olson, J. D., 1975, Geologic map of the Iris NW quadrangle, Gunnison and Saguache Counties, Colorado: U.S. Geological Survey Geologic Quadrangle Map GQ-1134.
Jackson, W. E., 1957, Geology of Brush Creek area and a petrographic study of the Morrison Formation, Gunnison, Colorado: Lexington, Ky., University of Kentucky, unpublished M.S. thesis, 63 p.
Jacob, C. E., and Lohman, S. W., 1952, Nonsteady flow to a well of constant drawdown in an extensive aquifer: American Geophysical Union Transactions, v. 33, p. 559-569.
Langenheim, R. L., 1952, Pennsylvanian and Permian stratigraphy in the Crested Butte quadrangle, Gunnison County, Colorado: American Association of Petroleum Geologists Bulletin, v. 36, p. 543-574.
McCord, W. R., 1957, Geology of the Upper Spring Creek area of Gunnison County, Colorado: Lexington, Ky., University of Kentucky, unpublished M.S. thesis, 49 p.
Murphy, J. H., 1951, Geology of the upper Cement Creek area of Gunnison County, Colorado: Lexington, Ky., University of Kentucky, unpublished M.S. thesis.
Olson, J. D., 1976, Geologic map and sections of the Iris quadrangle, Gunnison and Saguache Counties, Colorado: U.S. Geological Survey Geologic Quadrangle Map GQ-1286.
Prather, T. L., 1961, Geology of the north Italian Mountain area, Gunnison County, Colorado: Boulder, Colo., University of Colorado, unpublished M.S. thesis, 76 p.
_____1964, Stratigraphy and structural geology of the Elk Mountains, Colorado: Boulder, Colo., University of Colorado, Ph. D. thesis, 106 p.
Staatz, M. H., and Trites, A. F., Jr., 1955, Geology of the Quartz Creek pegmatite district, Gunnison County, Colorado: U.S. Geological Survey Professional Paper 265, 111 p.
Thomas, W. A., 1957, Stratigraphy of the Devonian Chaffee Formation of northeast Gunnison County, Colorado: Lexington, Ky., University of Kentucky, unpublished M.S. thesis, 91 p.
Thomasson, H. G., Jr., Olmstead, F. H., and LeRoux, E. F., 1960, Geology, water resources and usable ground water storage capacity of part of Solano County, California: U.S. Geological Survey Water-Supply Paper 1464, p. 220-223.
Tweto, Ogden, Moench, R. H., and Reed, J. C., Jr., 1976, Preliminary geologic map of the Leadville 1°x2° quadrangle, northwestern Colorado: U.S. Geological Survey Miscellaneous Field Studies Map MF-760.
Tweto, Ogden, Stevens, T. A., Hail, W. J., Jr., and Moench, R. H., 1976, Preliminary geologic map of the Montrose 1°x2° quadrangle, southwestern Colorado: U.S. Geological Survey Miscellaneous Field Studies Map MF-761.
U.S. Environmental Protection Agency, 1976, National interim primary drinking water regulations: U.S. Environmental Protection Agency, 570/9-76-003, 159 p.
_____1977, National secondary drinking water regulations: Federal Register, v. 42, no. 62, Thursday, March 31, 1977, Part I, p. 17143-17147.
Wood, L. E., 1957, Geology of the lower Hot Springs faulted area, Cement Creek, Gunnison County, Colorado: Lexington, Ky., University of Kentucky, unpublished M.S. thesis, 66 p.

CHEMICAL ANALYSES OF WATER FROM WELLS AND SPRINGS

[Analyses by U.S. Geological Survey. Underlined concentration is in excess of standards for drinking water. FT=feet; MICROMHO=micromho per centimeter at 25 Celsius; DEG°C=degrees Celsius; MG/L=milligram per liter; UG/L=microgram per liter]

HYDRO-LOGIC UNIT	NUMBER ON WATER-QUALITY MAP	LOCATION	DATE OF SAMPLE (Y-M-D)	GEOLOGIC UNIT	SITE[1]	DEPTH TO WATER BELOW LAND SURFACE[2] (FT)	TOTAL DEPTH OF WELL (FT)	SPECIFIC CONDUCTANCE (MICROMHOS)	PH (UNITS)	TEMPERATURE (DEG C)	HARDNESS (MG/L AS $CACO_3$)
A	1	NA05100111DDA	74-05-17	ALLUVIUM-COLLUVIUM	GW	--	30	189	7.7	5.0	90
	2	NA04900207BCD	76-07-27	ALLUVIUM	GW	26.00	60	525	7.6	10.0	220
	3	NB04900103DAD	76-08-28	ALLUVIUM	GW	--	25	260	7.5	14.0	120
	4	NB05000124DBC	76-08-26	ALLUVIUM	GW	12.00	35	250	7.5	17.0	130
	5	NB05000113CCD	76-10-14	ALLUVIUM	GW	15.00	40	470	7.7	5.5	210
	6	NB05000114ACD	76-10-14	ALLUVIUM	GW	32.00	67	910	7.7	6.0	400
	7	NA05000108DBD	74-06-11	ALLUVIUM	GW	3.00	28	254	7.9	7.0	130
	8	NA05100133ACB	74-05-17	ALLUVIUM	GW	--	40	284	7.6	4.0	140
	9	NA05100122DBA	76-08-26	ALLUVIUM	GW	--	43	320	7.6	16.0	--
	10	SC01508526DAC	76-10-28	ALLUVIUM	GW	14.00	41	380	7.3	11.0	200
	11	SC01508525CBC	74-06-07	ALLUVIUM	GW	--	42	402	7.7	16.0	190
	12	SC01508428ACB	74-06-12	ALLUVIUM	GW	--	60	265	7.7	7.0	130
	13	SC01508523BAA	76-08-27	ALLUVIUM	GW	--	--	340	7.4	11.0	160
	14	SC01508523AAB	76-08-27	ALLUVIUM	GW	17.00	--	310	7.6	16.0	--
	15	SC01508513CAB	76-10-28	ALLUVIUM	GW	20.00	34	200	6.8	11.0	92
	16	SC01508107DCA	76-08-23	ALLUVIUM	GW	11.00	33	155	7.3	9.0	69
	17	SC01408534DDB	76-08-27	ALLUVIUM	GW	--	--	280	7.3	12.0	--
	18	SC01408534BDA	74-06-07	ALLUVIUM	GW	--	68	276	8.0	9.0	140
	19	SC01408518DBA	74-06-06	ALLUVIUM	GW	32.00	139	359	7.9	9.0	180
	20	SC01408611AAD	74-06-07	ALLUVIUM	GW	--	21	310	7.4	8.0	130
	21	SC01308301CAB	77-02-13	ALLUVIUM	SP	--	--	70	7.4	3.0	25
	22	NA04900220ABA	74-06-10	ALLUVIUM	GW	3.00	20	390	7.2	7.0	150
	23	NB04900102CCC	74-06-11	ALLUVIUM	GW	2.00	25	444	7.6	6.0	220
	24	NB05000113BDB	74-06-13	ALLUVIUM	GW	--	25	339	7.2	--	160
	25	NB05100135CAA	74-06-10	ALLUVIUM	GW	--	17	519	7.7	8.0	260
	26	SC01508318CAA	74-06-12	ALLUVIUM	GW	15.00	28	219	7.9	5.0	110
	27	SC01408523CAD	74-06-07	ALLUVIUM	GW	12.00	48	319	8.0	3.0	170
B	28	SC01408703AAB	76-08-24	WASATCH AND OHIO CREEK FORMATIONS	SP	--	--	60	6.2	15.0	28
	29	SC01308734CBA	76-08-23	WASATCH AND OHIO CREEK FORMATIONS	SS	--	--	200	8.1	5.5	75
	30	NA04900117DAA	76-07-26	EXTRUSIVE-INTRUSIVE ROCKS	SP	--	--	155	9.1	24.0	61
	31	NA04900117BBC	76-07-26	EXTRUSIVE-INTRUSIVE ROCKS	SP	--	--	165	7.3	10.0	60
	32	NA05000132CAD	74-06-13	EXTRUSIVE-INTRUSIVE ROCKS	GW	33.00	205	599	7.7	10.0	170
	33	NA05000231AAC	77-02-11	EXTRUSIVE-INTRUSIVE ROCKS	SP	--	--	320	7.6	2.0	160
	34	NB05000116DBA	76-07-27	EXTRUSIVE-INTRUSIVE ROCKS	SP	--	--	265	7.5	11.0	110
C	35	SC01508615BDB	76-10-27	MESAVERDE GROUP	SP	--	--	360	7.6	6.0	170
	36	SC01508608DCB	74-06-10	MESAVERDE GROUP	GW	28.70	200	400	7.4	10.0	160
	37	SC01508607BCD	76-10-13	MESAVERDE GROUP	GW	10.00	25	305	7.3	5.0	110
	38	SC01508601CBC	76-10-27	MESAVERDE GROUP	SP	--	--	115	6.9	6.0	50
	39	SC01508701BCB	74-06-10	MESAVERDE GROUP	GW	--	72	426	7.4	9.0	74
	40	SC01408735DDC	77-08-18	MESAVERDE GROUP	SP	--	--	50	7.5	5.0	22
D	41	SC01508633CAC	76-10-27	MANCOS SHALE	SP	--	--	300	7.2	5.0	150
	42	SC01508623BAC	76-07-26	MANCOS SHALE	SP	--	--	525	7.7	9.0	270
	43	SC01408504CBB	74-06-06	MANCOS SHALE	SP	--	--	274	7.9	--	140
	44	SC01308628ACB1	77-04-29	MANCOS SHALE	GW	--	--	510	7.3	7.0	250
	45	SC01308620ACA1	77-04-29	MANCOS SHALE	SP	--	--	480	8.1	7.0	240
	46	SC01308615CBC1	77-04-29	MANCOS SHALE	SP	--	--	75	7.3	4.0	32
	47	SC01308603ABC1	77-04-28	MANCOS SHALE	SP	--	--	295	7.4	3.5	160
E	48	NA05000233CDC	76-07-28	DAKOTA SANDSTONE	SP	--	--	245	6.9	8.0	110
	49	NA05000236BBC	76-07-28	DAKOTA SANDSTONE	SP	--	--	105	6.1	14.0	38
	50	NB05000125ACD1	77-08-24	DAKOTA SANDSTONE	GW	7.00	125	500	6.6	11.0	230
	51	NA05000219CDA	77-02-11	DAKOTA SANDSTONE	SP	--	--	335	8.1	5.5	170
	52	NA05000119DCD	77-02-12	DAKOTA SANDSTONE	GW	239.00	275	490	4.9	9.5	190
	53	NA05000119DCB	77-08-19	DAKOTA SANDSTONE	GW	113.00	153	320	7.5	14.0	140
	54	NA05000214CCB	76-07-28	DAKOTA SANDSTONE	SP	--	--	225	7.4	4.5	90
	55	NB05000114CAA	76-10-29	DAKOTA SANDSTONE	GW	178.00	423	1180	7.4	11.0	78
	56	NA05000114BAC	76-07-27	DAKOTA SANDSTONE	SP	--	--	440	6.8	7.0	210
	DO.		76-10-26	DAKOTA SANDSTONE	SP	--	--	360	7.2	8.0	200
	57	NA05100128DCC	76-08-27	DAKOTA SANDSTONE	GW	--	--	560	7.2	11.0	--
	58	SC01508526DAC1	76-10-28	DAKOTA SANDSTONE	SP	--	--	260	7.6	10.0	230
	59	NA05100219DDB	77-02-10	DAKOTA SANDSTONE	SP	--	--	450	8.0	5.5	230
	60	NB05000134DAB	74-06-12	BURRO CANYON FORMATION	GW	--	125	586	7.2	9.0	220
	61	NA05100133CCB1	77-08-17	BURRO CANYON FORMATION	GW	33.00	95	320	7.6	13.5	180
	62	NA05000133DCD	74-06-10	MORRISON FORMATION	GW	--	120	619	7.8	9.0	180
	63	NA05100122BCA	74-06-07	MORRISON FORMATION	GW	--	85	355	7.8	9.0	180
	64	NB05000113CDC	76-10-14	ENTRADA SANDSTONE	GW	-157.00	797	470	7.3	8.0	130
	65	SC01508513CAB1	76-10-28	ENTRADA SANDSTONE	GW	-58.00	1480	450	7.6	13.5	170
	66	SC01408522DCD1	77-04-30	JUNCTION CREEK SANDSTONE	SP	--	--	760	7.4	27.0	290
	67	NA05100128DCD	76-08-26	MORRISON FORMATION	GW	--	65	460	7.4	11.0	230
	68	NA05100133CCB	77-08-17	MORRISON FORMATION	GW	134.00	405	1280	7.9	15.0	520
F	69	SC01408407BAD	76-07-24	GOTHIC-MINTURN FORMATION	SP	--	--	445	8.4	14.5	240
	70	SC01308415BAC	76-10-14	GOTHIC-MINTURN FORMATION	SP	--	--	365	8.4	3.5	160
	71	SC01308428ADD	76-10-14	MAROON FORMATION	SP	--	--	230	8.4	1.0	98
	72	SC01308511DAC	76-10-26	MAROON FORMATION	SP	--	--	240	7.7	6.0	120
	73	SC01408319CBC1	77-04-30	LEADVILLE LIMESTONE	SP	--	--	240	8.0	9.5	140
	74	SC01408319CBC	76-10-28	SAWATCH QUARTZITE	SP	--	--	365	8.0	4.0	210
	75	SC01408522DDA1	77-04-28	SAWATCH QUARTZITE	SP	--	--	375	7.8	4.0	200
G	76	NA05100122DDB	77-02-10	GRANITIC ROCKS	SP	--	--	420	8.0	5.5	230
	77	NA05100122DAD	76-08-27	GRANITIC ROCKS	GW	21.00	42	400	7.3	10.0	190
	78	SC01508318DBC	76-08-23	GRANITIC ROCKS	SP	--	--	100	7.6	17.0	39
	79	SC01508311BBB	76-07-25	GRANITIC ROCKS	SP	--	--	82	7.8	3.0	32
	80	SC01408127BCD	76-07-25	GRANITIC ROCKS	SP	--	--	130	7.5	8.0	50
	81	SC01408220DCD	76-08-23	GRANITIC ROCKS	SP	--	--	120	7.8	5.0	51
	82	SC01408221DBD	74-06-14	GRANITIC ROCKS	GW	17.00	34	95	7.0	2.0	41
	83	SC01408114BAC	76-08-23	GRANITIC ROCKS	SP	--	--	50	8.2	7.0	18
	84	SC01408418CAC	76-07-24	GRANITIC ROCKS	SP	--	--	650	7.4	23.0	270

NUMBER ON WATER-QUALITY MAP	NONCARBONATE HARDNESS (MG/L)	DISSOLVED CALCIUM (CA) (MG/L)	DISSOLVED MAGNESIUM (MG) (MG/L)	DISSOLVED SODIUM (NA) (MG/L)	PERCENT SODIUM	SODIUM ADSORPTION RATIO	DISSOLVED POTASSIUM (K) (MG/L)	BICARBONATE (HCO3) (MG/L)	CARBONATE (CO3) (MG/L)	ALKALINITY AS CACO3 (MG/L)	CARBON DIOXIDE (CO2) (MG/L)	DISSOLVED SULFATE (SO4) (MG/L) [250][3]	DISSOLVED CHLORIDE (CL) (MG/L) [250][3]	DISSOLVED FLUORIDE (F) (MG/L) [1.3][4]	DISSOLVED SILICA (SIO2) (MG/L)	DISSOLVED SOLIDS (SUM OF CONSTITUENTS) (MG/L) [500][3]	DISSOLVED NITRITE PLUS NITRATE (N) (MG/L) [10.0][4]	DISSOLVED ORTHOPHOSPHORUS (P) (MG/L)	DISSOLVED ARSENIC (AS) (UG/L) [50][4]	DISSOLVED BORON (B) (UG/L)	DISSOLVED IRON (FE) (UG/L) [300][3]	DISSOLVED MANGANESE (MN) (UG/L) [50][3]	DISSOLVED SELENIUM (SE) (UG/L) [10][4]
1	3	25	6.8	2.4	5	0.1	1.0	107	0	88	3.4	8.6	1.4	0.7	8.0	108	0.23	0.01	--	40	40	20	--
2	10	65	15	20	16	.6	1.0	261	0	214	10	29	9.9	.7	25	306	2.6	.05	3	--	0	0	2
3	6	36	7.6	5.5	9	.2	1.6	140	0	115	7.1	21	1.4	.1	15	160	.18	.00	0	--	240	1300	0
4	13	42	7.0	2.7	4	.1	1.1	147	0	121	7.4	13	.7	.2	9.5	149	.01	.00	0	--	0	0	0
5	6	61	13	3.7	4	.1	1.7	244	0	200	7.8	15	.8	.3	12	231	.78	.02	1	--	60	0	0
6	180	110	30	12	6	3	3.5	262	0	215	8.4	210	1.3	.4	33	533	.72	.02	1	--	50	0	4
7	17	40	7.2	3.0	5	.1	1.1	137	0	112	2.8	19	.8	.1	8.8	148	.17	.01	--	9	30	0	--
8	21	44	7.4	3.0	4	.1	.8	146	0	120	5.9	19	1.7	.7	7.9	163	1.3	.17	--	20	10	0	--
9	--	--	--	--	--	--	--	--	--	--	--	--	--	--	--	--	--	--	--	--	--	--	--
10	17	63	11	5.0	5	.2	1.4	226	0	185	18	31	1.0	.1	9.4	234	.09	.01	0	--	40	0	0
11	0	53	13	12	12	.4	2.3	232	0	190	7.4	15	4.7	.4	12	229	.36	.02	--	10	10	90	--
12	10	46	3.4	5.3	8	.2	2.7	145	0	119	4.6	5.3	1.9	.2	18	164	2.1	.02	--	30	50	20	--
13	25	50	8.6	4.8	6	.2	1.7	165	0	135	11	30	.8	.2	8.4	186	.13	.00	0	--	20	0	0
14	--	--	--	--	--	--	--	--	--	--	--	--	--	--	--	--	--	--	--	--	--	--	--
15	0	27	5.9	4.2	9	.2	.9	117	0	96	30	4.9	2.1	.2	14	119	.56	--	0	--	90	0	0
16	9	21	4.0	2.1	6	.1	1.4	73	0	60	5.9	8.2	.3	.1	11	84	.07	.00	0	--	20	0	0
17	--	--	--	--	--	--	--	--	--	--	--	--	--	--	--	--	--	--	--	--	--	--	--
18	18	46	6.2	3.3	5	.1	.9	149	0	122	2.4	19	1.6	.1	9.9	162	.34	.01	--	0	20	40	--
19	26	59	8.4	3.1	4	.1	.9	190	0	156	3.8	27	1.8	.1	11	208	.77	.01	--	10	10	0	--
20	7	39	6.8	15	20	.6	1.2	144	0	118	9.2	36	.9	.1	10	182	.48	.01	--	10	20	0	--
21	0	7.2	1.7	3.2	21	.3	.5	36	0	30	2.3	3.0	.5	.1	13	47	.11	.01	0	--	20	0	0
22	25	47	9.0	24	25	.8	4.1	158	0	130	16	28	13	.3	37	263	5.1	.07	--	50	40	--	--
23	2	66	14	5.1	5	.1	2.2	269	0	221	11	13	3.2	.2	12	255	.08	.00	--	30	3800	2100	--
24	0	47	11	10	12	.3	3.3	199	0	163	20	13	1.7	.3	29	215	.14	.02	--	30	600	450	--
25	21	64	25	9.4	7	.3	2.6	295	0	242	9.4	26	5.1	.3	31	313	.89	.05	--	50	50	0	--
26	0	26	9.8	5.8	11	.2	.8	133	0	109	2.7	9.2	1.0	.3	11	132	.53	.01	--	9	30	0	--
27	22	48	12	2.2	3	.1	.7	180	0	148	2.9	18	1.9	.1	6.6	180	.41	.01	--	8	10	0	--
28	5	9.4	1.2	1.5	10	.1	.7	28	0	23	28	5.1	.4	.0	5.7	39	.09	.00	1	--	280	240	0
29	17	25	3.1	10	22	.5	.8	71	0	58	.9	33	.5	.1	6.7	115	.09	.00	30	--	10	50	1
30	0	20	2.7	6.2	18	.3	2.0	79	0	65	.1	6.6	2.4	.3	21	100	.00	.03	4	--	20	0	0
31	0	20	2.4	7.2	20	.4	2.1	83	0	68	6.7	5.9	2.5	.2	44	127	.18	.18	7	--	60	10	0
32	0	56	7.6	51	37	1.7	16	238	0	195	7.6	86	12	3.4	14	365	.04	.01	--	420	620	120	--
33	0	49	8.5	8.0	10	.3	3.8	208	0	171	8.4	5.2	3.6	.3	27	211	.72	.04	1	--	10	90	1
34	0	34	6.5	8.8	14	.3	2.1	145	0	119	7.3	5.9	2.8	.3	49	182	.00	.38	5	--	40	20	1
35	0	45	15	7.0	8	.2	1.1	226	0	185	9.1	12	.9	.1	15	209	.33	.01	0	--	40	0	0
36	0	43	12	21	22	.7	.8	230	0	190	15	16	1.8	.1	15	225	.35	.01	0	--	20	30	0
37	0	32	6.7	7.9	14	.3	.6	146	0	120	12	5.2	3.3	.1	15	145	.54	.04	1	--	80	10	0
38	0	14	3.7	2.5	10	.2	.6	68	0	56	14	2.7	.5	.1	12	70	.08	.01	0	--	40	0	0
39	0	25	2.7	58	63	2.9	.9	196	0	161	12	23	16	.4	10	235	.02	.01	--	60	2000	400	--
40	2	6.8	10	3.5	26	.3	.2	24	0	20	1.2	4.0	.5	.1	11	41	.36	.01	0	--	40	1	0
41	7	37	14	8.1	10	.3	2.4	175	0	144	18	26	1.4	.2	22	198	.06	.05	1	--	60	10	1
42	30	70	23	8.5	6	.2	.8	292	0	240	9.3	29	2.4	.2	14	293	.28	.02	1	--	10	0	0
43	9	44	8.2	2.1	3	.1	.9	164	0	135	3.3	9.2	.8	.1	6.0	152	.00	.02	--	10	20	0	--
44	41	67	21	14	11	.4	1.3	260	0	213	21	58	1.0	.1	8.6	299	.00	.02	0	--	20	40	0
45	69	67	18	14	11	.4	2.7	210	0	172	2.7	86	.4	.1	7.2	299	.11	.02	0	--	10	0	1
46	0	9.5	2.0	1.9	11	.1	1.8	42	0	34	3.4	7.3	.9	.1	7.5	52	.00	.02	0	--	260	0	0
47	18	58	3.0	2.6	3	.1	.7	170	0	139	11	12	.5	.1	7.3	169	.13	.02	0	--	10	0	0
48	7	33	6.0	5.0	9	.2	1.9	122	0	100	25	11	2.9	.3	18	139	.10	.06	1	--	30	20	1
49	11	12	2.0	1.8	9	.1	1.0	33	0	27	42	8.0	3.0	.1	9.3	57	.71	.01	1	--	110	30	1
50	55	58	20	14	11	.4	7.0	210	0	170	84	97	4.1	.5	20	331	--	--	10	--	6500	340	0
51	7	48	11	8.0	9	.3	2.4	193	0	158	2.5	17	2.6	.3	23	208	.11	.04	0	--	10	0	1
52	180	42	20	10	10	.3	6.2	3	0	2	60	200	3.5	.0	35	324	.97	.03	0	--	1100	260	2
53	41	36	12	8.6	11	.3	4.3	120	--	98	6.1	61	1.9	.4	30	215	.05	.00	1	--	150	120	0
54	24	25	6.7	5.8	12	.3	1.5	81	0	66	5.2	6.8	1.0	.2	14	102	.20	.01	1	--	10	0	0
55	0	20	6.8	310	87	15	16	903	0	741	58	3.4	14	4.6	7.8	829	.01	.01	0	--	790	50	0
56	71	58	16	6.8	6	.2	2.9	170	0	139	43	72	3.8	.5	18	264	.38	.02	0	--	0	0	9
DO.	58	56	15	7.0	7	.2	2.9	175	0	144	18	67	3.8	.5	18	258	.41	.01	0	--	30	0	10
57	--	--	--	--	--	--	--	--	--	--	--	--	--	--	--	--	--	--	--	--	--	--	--
58	48	72	11	4.7	4	.1	1.4	216	0	177	8.7	30	.8	.1	8.8	236	.12	.01	0	--	40	10	0
59	4	50	26	2.5	2	.1	2.9	278	0	228	4.4	14	1.9	.1	8.7	246	.41	.00	0	--	600	0	2
60	0	60	17	31	22	.9	10	276	0	226	28	62	9.5	.7	25	353	.25	.02	--	110	110	100	--
61	19	47	14	5.4	6	.2	2.2	190	0	160	7.6	30	1.4	.2	9.7	206	.56	.01	0	--	10	0	--
62	19	48	14	53	38	1.7	9.0	193	0	158	4.9	110	19	3.8	4.4	359	.07	.01	--	310	1800	270	--
63	31	50	14	5.7	6	.2	2.0	185	0	152	4.7	32	1.6	.3	8.5	206	.15	.01	--	7	20	0	--
64	0	40	6.7	20	24	.8	9.1	158	0	130	13	51	2.1	1.7	8.8	219	.06	.02	8	--	1000	100	0
65	18	44	15	11	12	.4	2.6	187	0	153	7.5	41	3.6	.3	8.8	219	.01	.01	6	--	470	60	0
66	0	78	22	65	32	1.7	7.7	360	0	295	23	95	18	1.7	20	485	.04	.03	15	--	0	0	0
67	23	68	14	5.5	5	.2	1.9	249	0	204	16	24	.8	.2	11	250	.37	.00	0	--	0	0	0
68	280	140	42	34	12	.6	9.5	290	0	240	5.8	360	7.3	.7	20	758	.31	.02	0	--	60	20	27
69	41	54	25	1.0	1	.0	1.0	240	0	197	1.5	28	1.2	.1	7.2	237	.25	.01	1	--	10	0	1
70	0	39	15	.7	1	.0	.6	195	0	160	1.2	5.4	.5	.1	3.4	162	.16	.01	1	--	50	0	0
71	0	34	3.1	1.9	4	.1	.5	125	0	103	.8	2.5	.5	.1	7.7	112	.03	.01	1	--	60	0	0
72	0	35	8.0	2.6	4	.1	.5	155	0	127	4.9	2.3	.5	.1	6.2	133	.29	.01	0	--	40	10	0
73	15	34	13	.9	1	.0	.4	150	0	123	2.4	13	.5	.1	6.5	143	.11	.02	0	--	0	0	0
74	0	63	12	.4	0	.0	.3	215	0	176	3.4	20	.5	.1	5.1	209	.36	.01	0	--	20	0	1
75	42	53	16	2.4	3	.1	.7	190	0	156	4.8	37	1.2	.1	6.3	211	.05	.02	1	--	20	0	0
76	11	54	23	5.5	5	.2	2.3	266	0	218	4.3	13	3.7	.1	11	247	.60	.01	0	--	120	10	2
77	7	56	12	4.8	5	.2	1.5	222	0	182	18	7.7	4.6	.2	14	210	.00	.01	0	--	10	0	0
78	0	10	3.4	4.9	21	.3	.6	48	0	39	1.9	4.1	.6	.3	16	64	.03	.00	0	--	70	0	0
79	1	9.2	2.2	1.7	10	.1	.4	38	0	31	1.0	5.3	.5	.2	9.1	48	.15	.01	1	--	10	0	0
80	0	13	4.2	3.5	13	.2	1.1	67	0	55	3.4	5.2	1.2	.1	14	78	.56	.02	1	--	10	0	0
81	0	16	2.8	4.1	15	.2	.7	70	0	57	1.8	5.7	.6	.1	15	80	.15	.00	0	--	10	0	0
82	0	11	3.2	4.0	18	.3	.3	54	0	44	8.6	3.3	.1	.1	11	61	.26	.01	--	20	330	30	--
83	5	5.7	1.0	1.6	15	.2	.8	16	0	13	.2	4.7	.5	.1	5.5	30	.43	.00	0	--	10	0	0
84	28	77	20	35	21	.9	5.9	301	0	247	19	81	11	1.4	18	398	.14	.03	8	--	10	0	0

[1]GW, well; SP, spring; SS, mine drainage.
[2]Negative number refers to a flowing well with pressure head given in feet.
[3]Recommended standard for drinking water established by U.S. Environmental Protection Agency, 1977.
[4]Mandatory standard for drinking water established by Colorado Department of Health (1977) and U.S. Environmental Protection Agency (1976).

RECONNAISSANCE OF GROUND-WATER RESOURCES IN THE VICINITY OF GUNNISON AND CRESTED BUTTE, WEST-CENTRAL COLORADO

By
T. F. Giles
1980