45-45

PLATE 7.

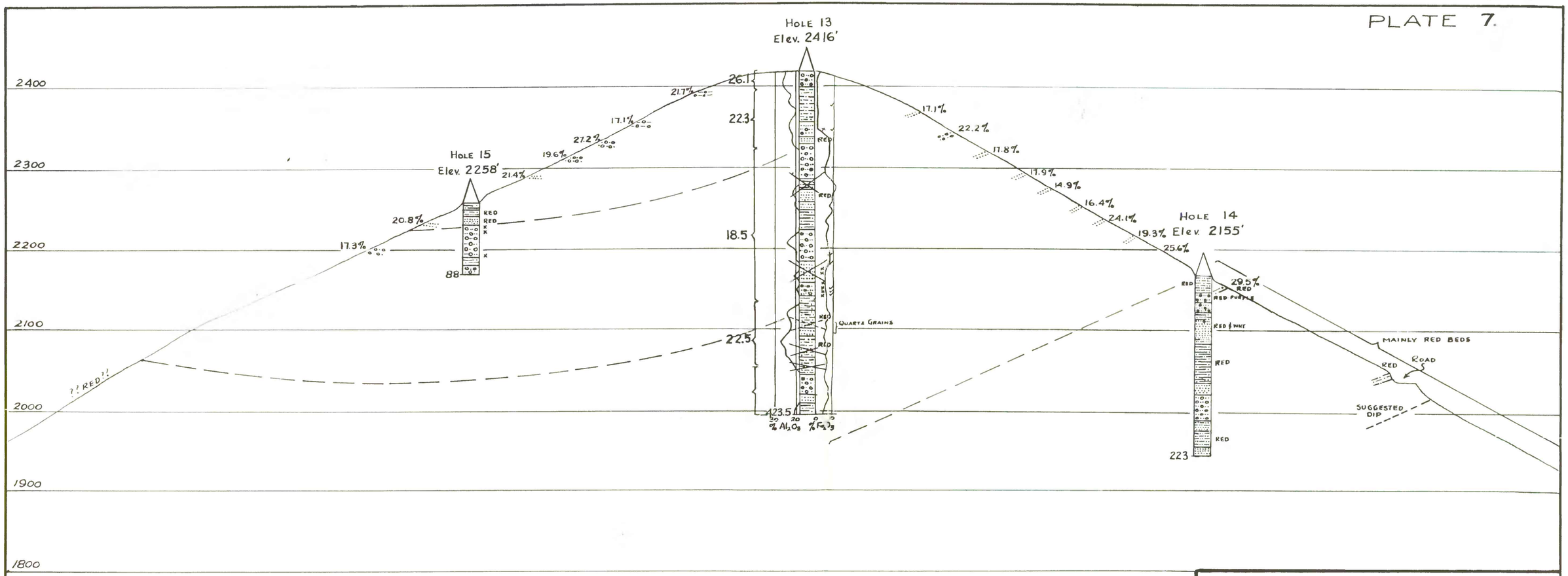

U.S. GEOLOGICAL SURVEY

HOBART BUTTE ALUMINA CLAY DEPOSIT

LANE COUNTY, OREGON

SECTION G-G'

SCALE: 100' = 1"

JOHN S. LOOFBOUROW, JR. JUNE 30, 1943

OR-2