U. S. GEOLOGICAL SURVEY
WASHINGTON
DEC 2 1955
LIBRARY

DIAGRAMS FOR CONSTRUCTION OF MODEL '54 TRANSMISSION AND REFLECTION FLUORIMETER

By

Ernest E. Parshall and Lewis F. Rader, Jr.

U. S. Geological Survey
Open-file release
55-130

This report is preliminary and has not been edited or reviewed for conformity with Geological Survey standards and nomenclature.

[1955]

(200)
R290
no.351

Appendix

List of parts for Model '54 fluorimeter

Code	Figure No.	Plate No.	Item and description
B1-6	1	5	Batteries, radio C, 7-1/2 V.
B7	2	-	Battery, 6 V., storage, automobile type, 120 amp.hr. capacity or larger. Not needed if commercial-type power source is used.
B8	3	-	Batteries, five 1-1/2 V., radio plug-in type.
B9	4	-	Batteries, three No. 6, 1-1/2 V., dry cells.
B10	4	-	Batteries, eleven No. 6, 1-1/2 V., dry cells.
g	1	-	Common ground.
M1	1	1(g)	Milliammeter, Beckman DU, zero-center (range unknown).
P1,P2.	1	5	Plugs, Amphenol No. 79-05 M, heavy-duty radio connectors.
P3	4	-	Plugs, polarized, to fit receptacle 4.
P4	3	-	Plugs, polarized, to fit receptacle 5.
Rec.1,2,3.	1	5	Receptacles, Amphenol No. 79-P05F, heavy-duty radio connectors.
Rec.4	4		" three wire standard type to fit polarized plugs.
Rec.5	3		" " " " " " "
R1	1	2	Resistors, 39 ohms, 1 W.
R2	1	2	" 47 ohms, 1 W.
R3	1	2	" 1 megohm, 1/2 W.
R4	1	2	" 150,000 ohms, 1/2 W.
R5	1	2	" 2,000 megohms (Beckman).
R6a	1	4	" 2.7 ohms, 1 W.
R6b	1	4	" 22 ohms, 1 W.
R7a	1	4	" 4.7 ohms, 1 W.
R7b	1	4	" 120 ohms, 1 W.
R8a	1	4	" 27 ohms, 1 W.
R8b	1	4	" 470 ohms, 1 W.
R9a	1	4	" 27 ohms, 1 W.
R9b	1	4	" 4.7 ohms, 1 W.
R10	1	4	" 15 ohms, 1 W.
R11a	1	4	" 39 ohms, 1 W.
R11b	1	4	" 560 ohms, 1 W.
R12	1	4	" 150 ohms, 1 W.
R13a	1	4	" 820 ohms, 1 W.
R13b	1	4	" 120 ohms, 1 W.
R14a	1	4	" 68 ohms, 1 W
R14b	1	4	" 100 ohms, 1 W.
R15	1	4	Helipot, 300 ohms, 3 revolution, Beckman model C. dark current adjustment.
R16	1	4	Slide wire disk, 100 ohms, Beckman DU, (percent transmission).
R17	1	4	Helipot, 200 ohms, 10 revolution, Beckman model A, (sensitivity control).
R18	1	4	Grid to plate resistor, 100 megohms, Beckman.
R19	3	-	Resistors, 56 ohms, 1 W.
R20	3	-	Resistors, 133 ohms, 1 W.
R21	3	-	" 30 ohms, 1 W.
R22	3	-	" 16 ohms, 1 W.
R23	4	-	" 40 ohms, 4 W. Variable Clarostat. Cat.No. 10-40
R24	4	-	" 10 ohms, 10 W.
R25	4	-	" 40 ohms, 10 W.
R26	4	-	" 75 ohms, 10 W., adjustable, set at 60 ohms.
S1	1	1(h)	Switch, check-range selector, rotary ceramic, two circuit, ~~three~~ two position.
S2	1	1(b)	Switch, head selector, rotary ceramic, five circuit, two position.
S3	1	1(d)	Switch, ~~toggle~~, battery on-off, ~~DPST, 12 amp., 125 V~~, rotary ceramic, two circuit, two position.
S4	1	3	Switch, dark current, in phototube head.
S5	2	1(i)	Switch, tap, battery No. 1, rotary ceramic, one circuit, four position.
S6	2	1(j)	Switch, tap, battery No. 2, rotary ceramic, one circuit, five position.
S7	2	1(k)	Switch, tap, battery No. 3, rotary ceramic, one circuit, four position.
S8	2	1(l)	Switch, battery test, rotary ceramic, two circuit, eight position.
S9	3	-	Switch, battery change-over, 6 to 7-1/2 V, rotary ceramic, six circuit, two position.
S10	4	-	Switch, lamp start, 1 amp., 125 V., two circuit, momentary contact, push to close circuit.
		-	Cable, 5 conductor, shielded, rubber covered.

U.S. GEOLOGICAL SURVEY WASHINGTON, D.C.
LIBRARY

Appendix (continued)

Code	Figure No.	Plate No.	Item and description
S11	4	-	Switch, on-off, DPST toggle, 3 amp., 125 V., bat handle.
S12	4	-	Switch, on-off, SPST toggle, 3 amp., 125 V., bat handle.
V1	1	2(E)	Phototube, Beckman No. 2342-1 blue sensitive, 220-625 mu.
V2	1	2(A)	Electrometer tube, Beckman No. 2532, Sylvania No. 1229.
V3	1	4	Amplifier tube, Beckman No. 2531, Sylvania No. 1229.
F	4	-	Fuse, 1 amp., 3 AG, and chassis mounting.
P.L.	4	-	Pilot light, NE51, with resistor socket.
T1	4	-	Transformer, 115 V, 60 cycle, 50 Va/24V., secondary.
T2	4	-	Transformer, 115 V, 60 cycle, 35 Va/24V., secondary remote control type.
Rect.1	4	-	Rectifier, full wave bridge, 25 V., AC/20V. DC., 3 amp., dry plate type.
Rect., 2,3.	4	-	Rectifier, full wave bridge, 25 V., AC/20V. DC., 600 ma., dry plate type.
M	4	-	Milliammeters, DC, 0/500.
Lamp	4	-	Lamp, 3 W., 12-16 V., DC., fluorescent black-light, indexing base, RP 12 bulb.

Note: Wiring diagram (Figure 1) may be modified by changing the resistance values of certain resistors while eleminating other resistors now shown in figure 1. If the changes in value of resistors indicated here are made, the check position on switch 1 must be omitted also. Thus it is possible to replace R6a and b with a single resistor, 25 or 27 ohm, 1 W. Also R7a and b and R8a and b may be replaced by a single resistor, 100 ohm, 1 W. A single 10 ohm, 1 W. resistor may replace R9a and b and R10. Likewise a single resistor, 1,000 ohm, 1 W. may replace the combination R11a and b, R12, and R13a and b. Also R14a and b may be replaced by a single 150 or 180 ohm, 1 W. resistor. Standard 10% type resistors have been found adequate. Calibration of the 0.1 to 1.0 range may be accomplished by changing either the 10 or the 100 ohm resistor, or possibly both. This should cause either a greater or smaller change in the ratio of 0.1 to 1.0 and indicate whether more or less resistance is required for the correction. Usually an assortment of 10 and 100 ohm resistors varying within the 10% tolerance of standard resistors will enable one to find a particular resistor that will produce the correct and desired value, provided the resistance of each is measured to select one either higher or lower in resistance as indicated by the above test to make the ratio correct.

Construction of the reflection unit, separation drawing, (Figure 3) may be simplified by eliminating parts marked Ha, Hb, Hc and Hd, Figure 3, and substituting part F shown on Figure 2. However, the opening in part F (1-7/8 inch hole) need not be cut, but the overall width of part F must be the same as the base, part E, Figure 3, in order to obtain a fit. The track for part G, Figure 3, is milled so that the openings, G2 (part G, Figure 3) will locate properly in the opening in the bottom of part E, Figure 3. The assembly is mounted on base J. Figure 3, with spacers 1 inch long.

U. S. GEOLOGICAL SURVEY WASHINGTON
DEC 1 0 1955
LIBRARY

U. S. GEOLOGICAL SURVEY
WASHINGTON
DEC 1 6 1955
LIBRARY

(200)
R290
no. 351

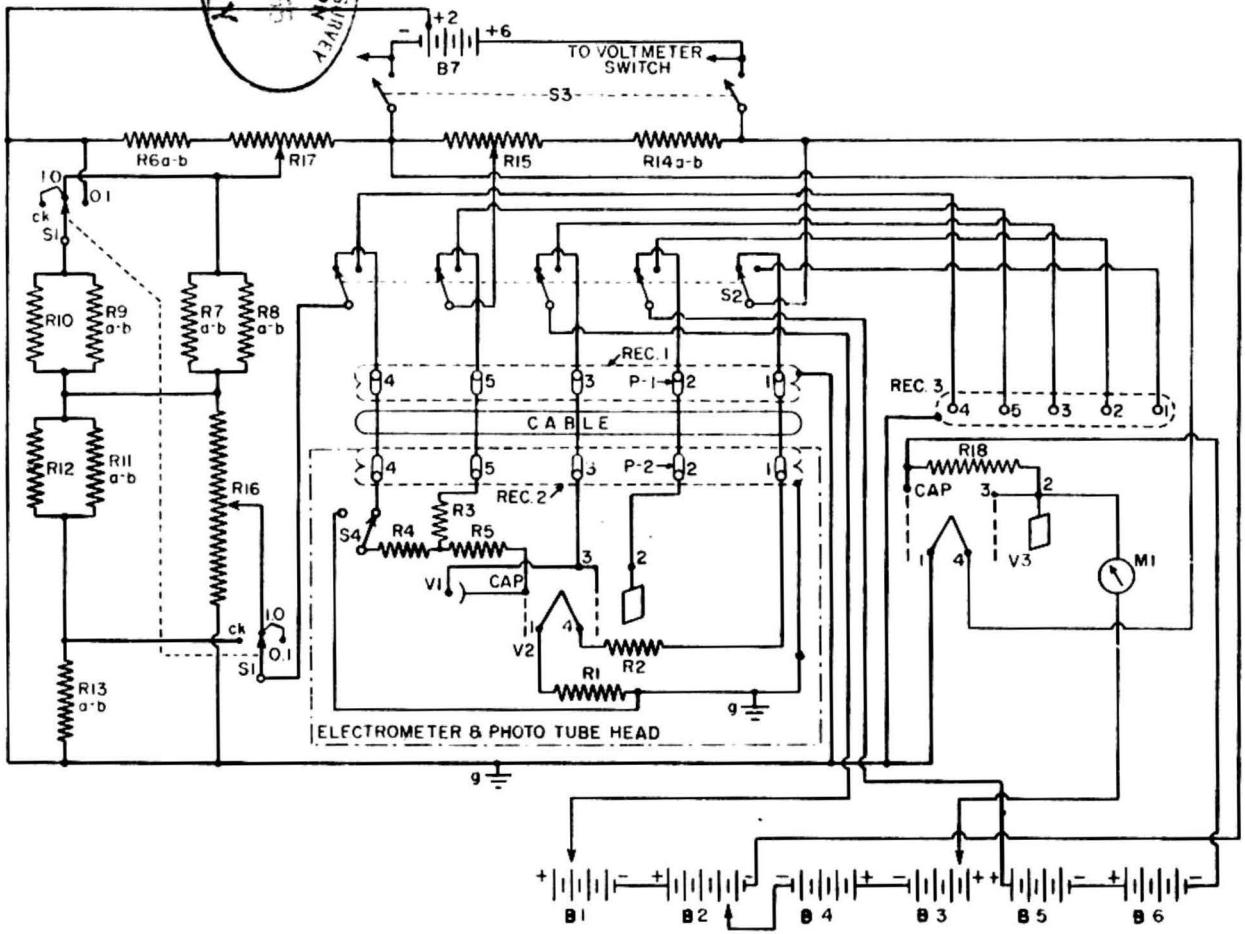

Figure 1. WIRING DIAGRAM OF MODEL '54 FLUORIMETER

PARSHALL 8-9-54

(200)
R29
no. 351

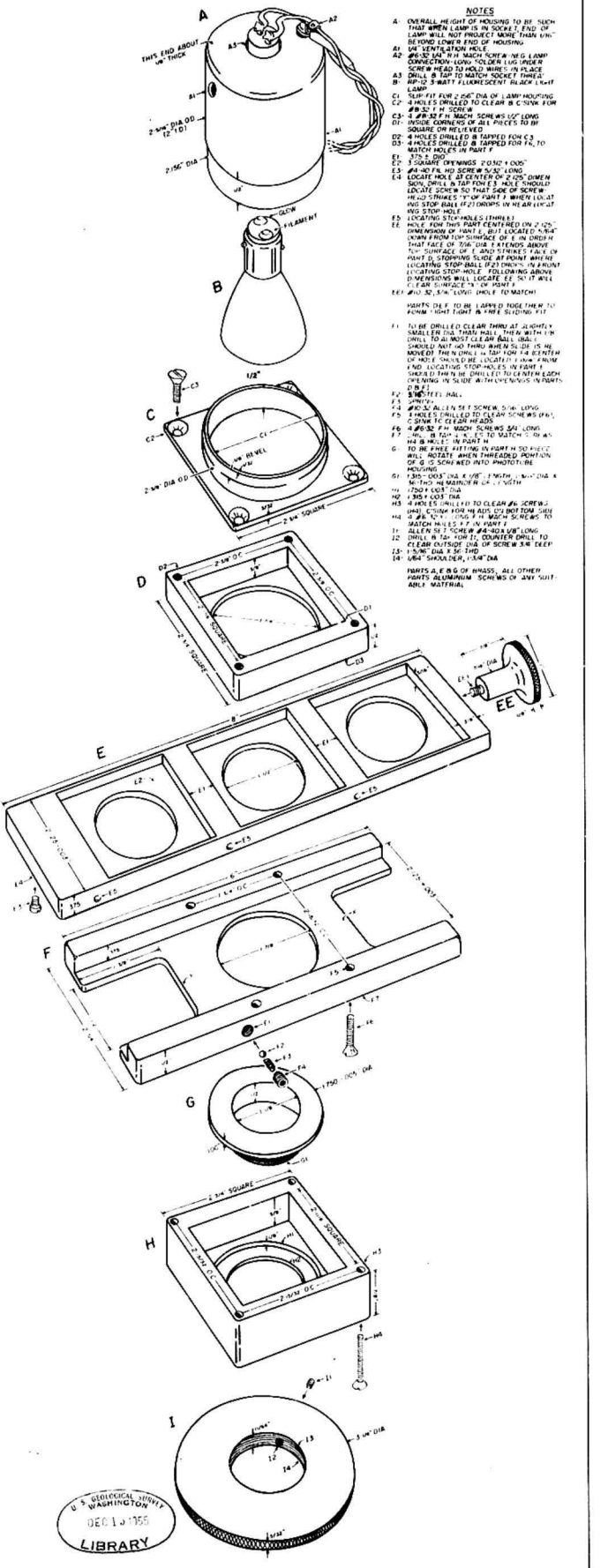

FIG.2-SEPARATION DRAWING SHOWING COMPONENT PARTS OF TRANSMISSION UNIT

(200)
R29r
no. 351

U. S. NAVAL OBSERVATORY
WASHINGTON
LIBRARY

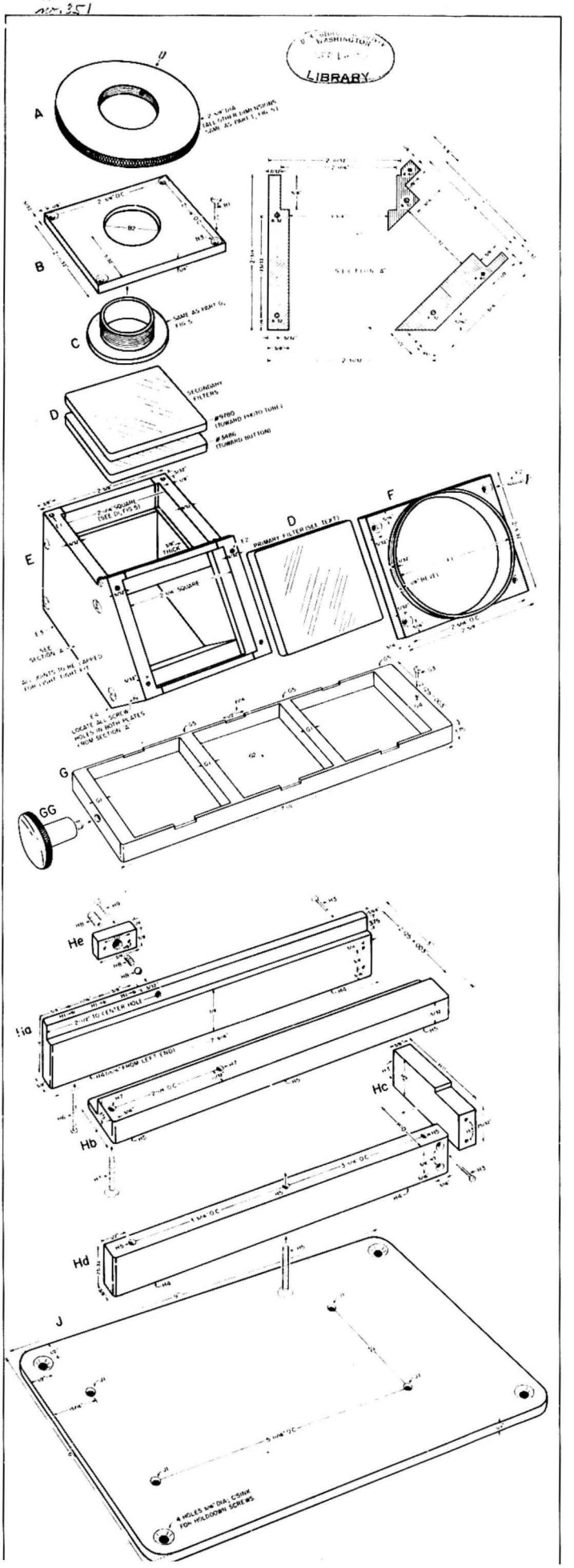

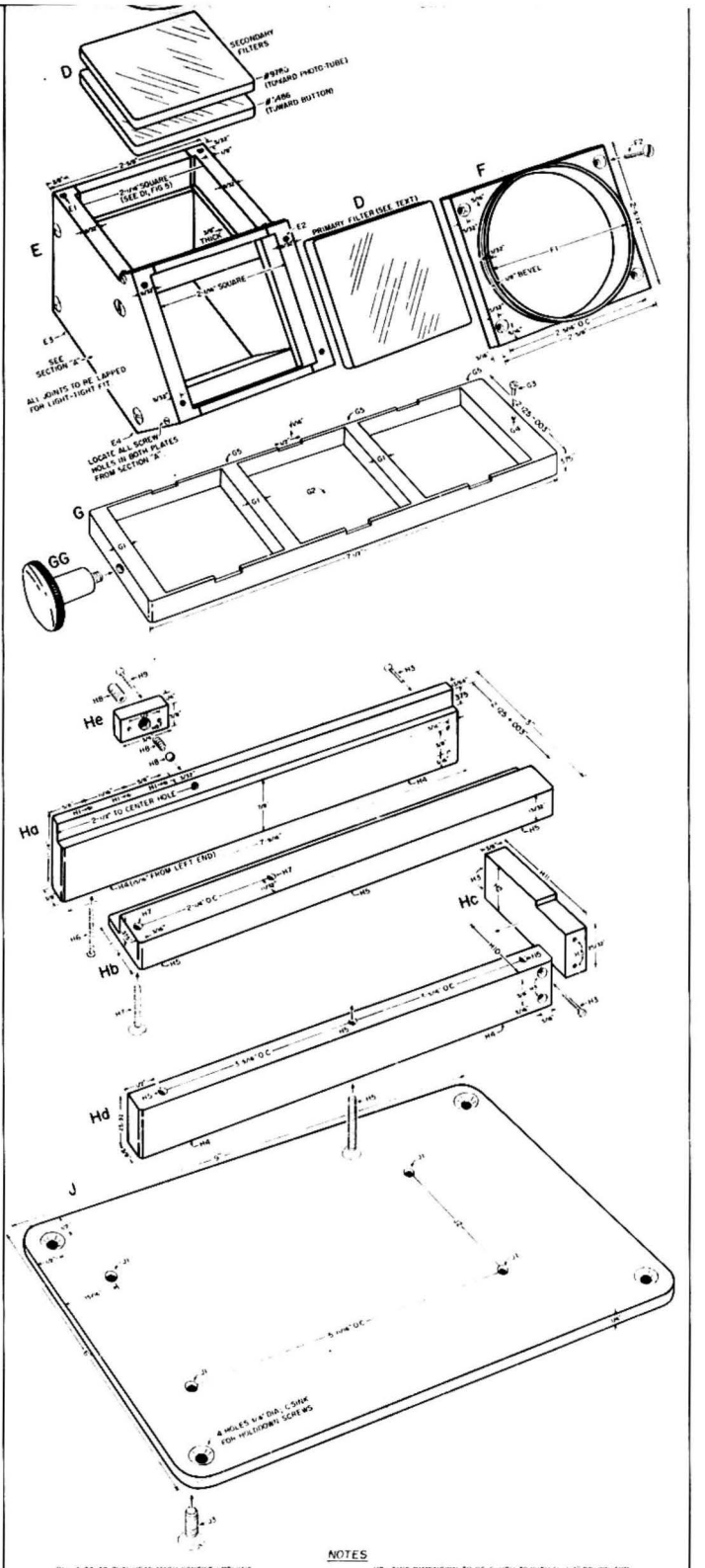

NOTES

B1- 4 #4-40 OVAL HEAD MACH SCREWS 1/2" LONG
B2- SAME AS DIA H1 & H2, FIG 5 (H1, 1/8" DEEP)
B3- DRILL & C'SINK 4 HOLES TO CLEAR B1
E1- DRILL & TAP 4 HOLES TO MATCH PART B
E2- " " " " " " " " F & F2
E3- " " " " " " " HOLES H1 & SCREWS H6, PART Ha
E4- DRILL & TAP 2 HOLES TO MATCH HOLES AND SCREWS H7, PART Hb
F1- SAME AS C1, FIG 5 (OUTSIDE DIA 2-3/8")
F2- SAME AS N1
G1- .297 ±.005
G2- SEE E2, FIG 5
G3- SEE E3, FIG 5
G4- SAME AS E4, FIG 5, EXCEPT HEAD OF SCREW STRIKES OUTSIDE OF BACK PLATE, PART E
G5- SEE E5, FIG 5
G6- SEE E6 & E1, FIG 5, EXCEPT HOLE IN PART G IS CENTERED

CONTACT BETWEEN PARTS E & G TO BE LAPPED TO FORM LIGHT-TIGHT & FREE SLIDING FIT

H1- 3 HOLES DRILLED TO CLEAR H6, C'BORE TO CLEAR HEADS 3/4" DEEP

H2- THIS DIMENSION TO BE FLUSH TO WITHIN .001" BELOW TOP OF 7/8" DIMENSION OF PART Ha
H3- 4 #4-40 F H SCREWS 5/8" LONG; DRILL TO CLEAR & C'SINK HEADS IN PARTS Ha & Hd; DRILL & TAP MATCHING HOLES IN ENDS OF PART Hc
H4- DRILL CENTER OF 3/8" DIMENSION SPACED AS SHOWN AT J1, TAP TO MATCH J3
H5- 5 #6-32 X 1" LONG F H SCREWS, DRILL TO CLEAR & C'SINK PART Hd FOR H5 SCREWS; DRILL & TAP PART Hb TO MATCH HOLES H5, PART Hd
H6- 3 #3-56 X 3/4" LONG FILL HD SCREWS
H7- 2 #6-32 X 3/4" LONG F H SCREWS, CLEAR & C'SINK 2 HOLES SHOWN ON PART Hb
H8- SEE F1, 2, 3 & 4 OF FIG 5
H9- 2 #3-56 X 3/8" F H SCREWS, DRILL TO CLEAR & C'SINK PART He, DRILL & TAP FOR SAME IN PART Hb
H10- TO CLEAR 1-1/16" DIMENSION OF PART Hb
H11- LENGTH ADJUSTED TO KEEP 2.125" DIMENSION PARALLEL Ha, Hb & Hd, 7-5/16" LONG
J1- 4 HOLES, DRILL & C'SINK TO CLEAR J3
J2- APPROX 2-19/32" O.C. CENTER ON 6" DIMENSION & FROM PARTS Ha, b, c & d WHEN ASSEMBLED
J3- 4 #10-32 X 1/2" LONG F H SCREWS

PARTS C & G OF BRASS; ALL OTHER PARTS ALUMINUM
SCREWS OF ANY SUITABLE MATERIAL

FIG. 3 - SEPARATION DRAWING SHOWING COMPONENT PARTS OF REFLECTION UNIT

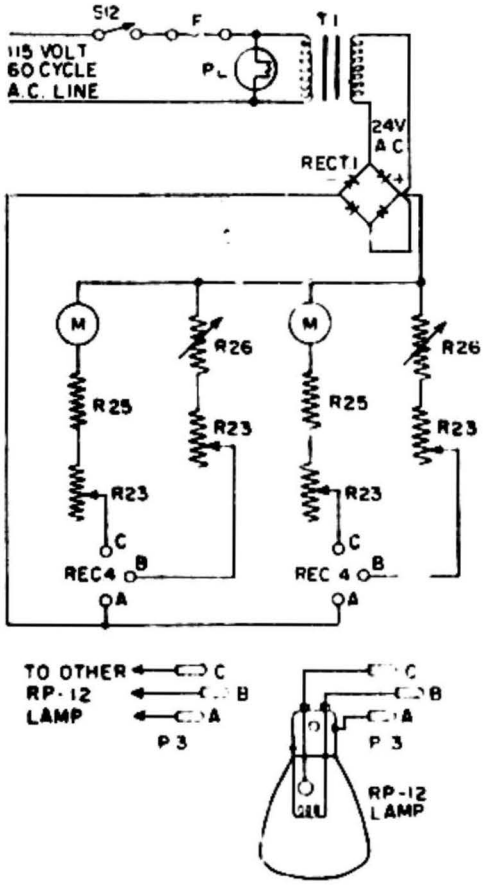

SINGLE TRANSFORMER AND RECTIFIER-TYPE POWER SUPPLY FOR OPERATION OF TWO RP-12 LAMPS

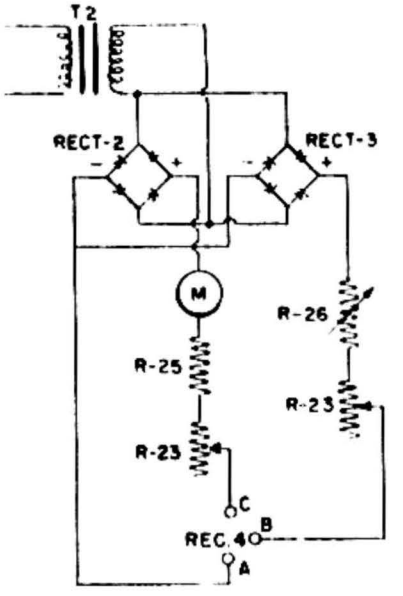

LOW-COST POWER SUPPLY FOR OPERATION OF ONE LAMP

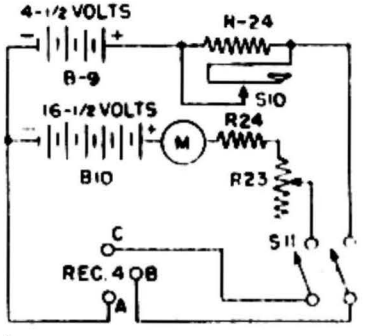

OPERATION OF RP-12 LAMP ON DRY CELL POWER

U. S. GEOLOGICAL SURVEY
WASHINGTON
LIBRARY

Figure 4. WIRING DIAGRAM AND PARTS

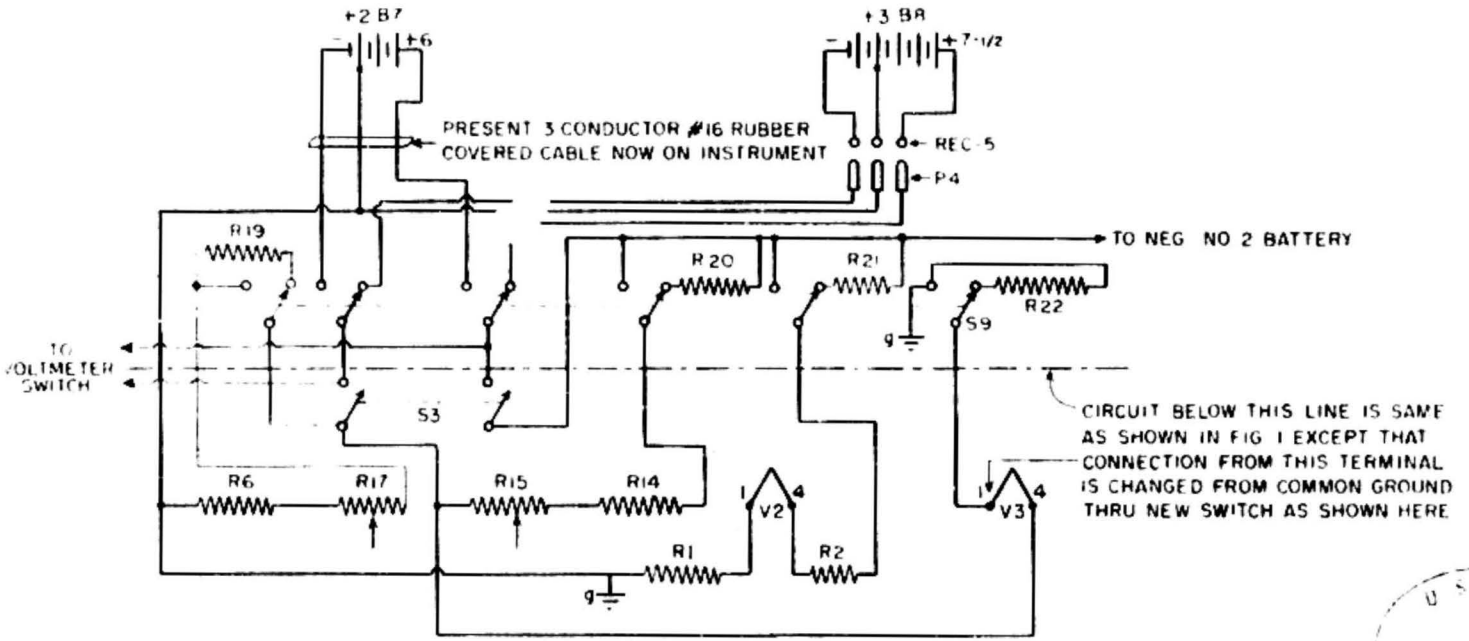

U. S. GEOLOGICAL SURVEY
WASHINGTON
LIBRARY

Figure 5. MODIFICATION OF WIRING DIAGRAM FOR OPERATION ON DRY CELL BATTERY

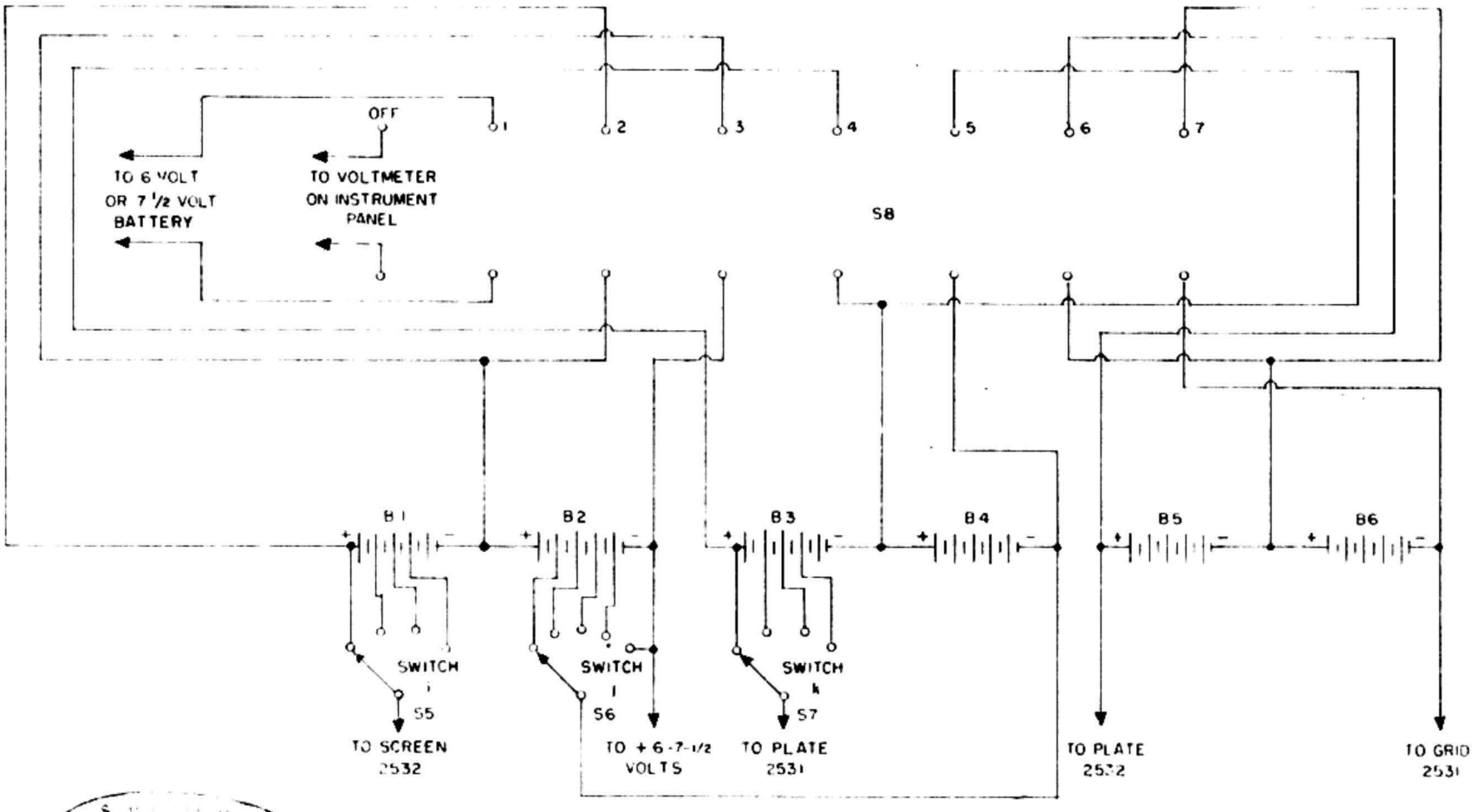

U. S. WASHINGTON NAVY
LIBRARY

FIGURE 6 WIRING DIAGRAM OF BATTERY TEST CIRCUIT

(200)
R290
no. 351

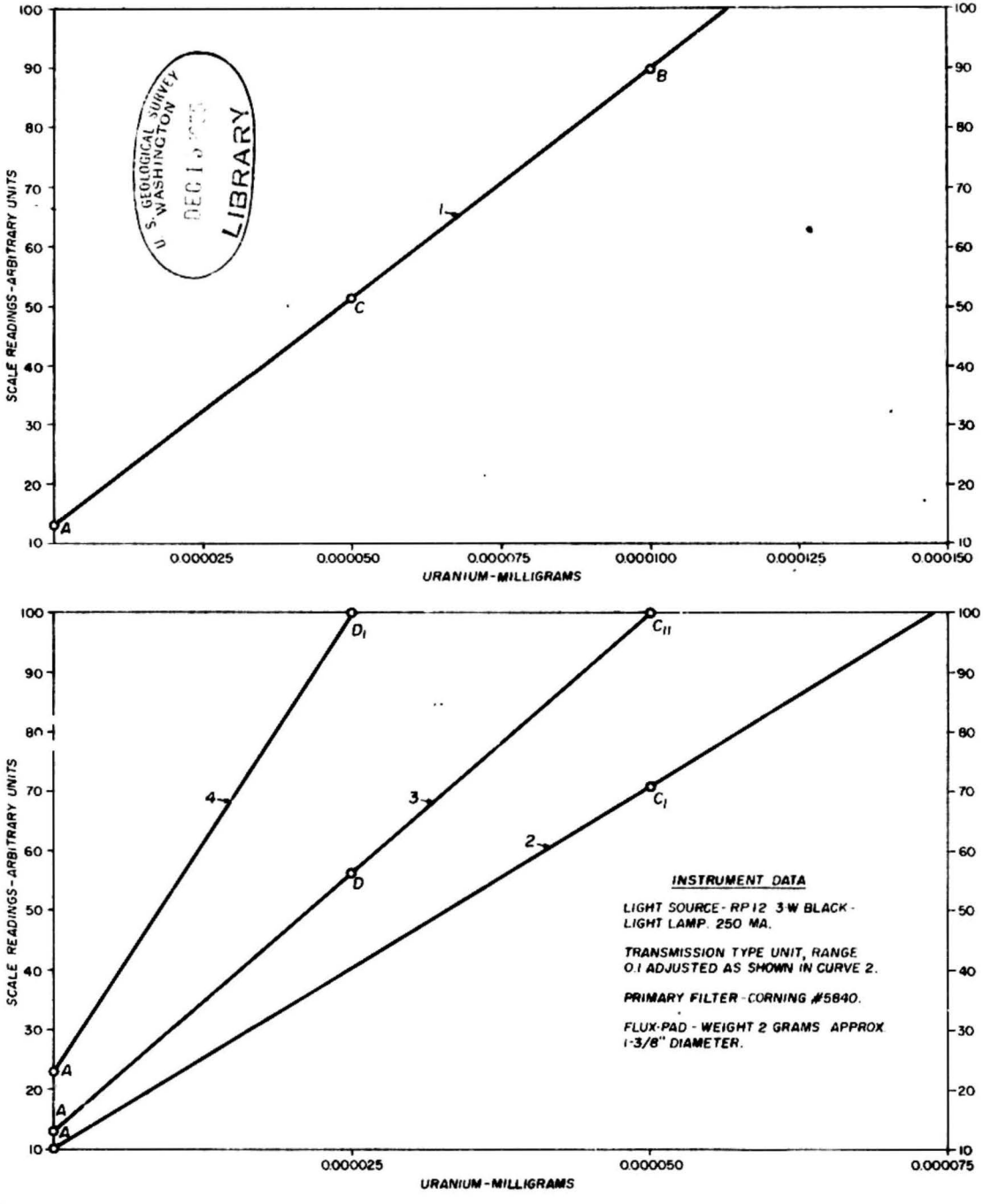

U. S. GEOLOGICAL SURVEY
WASHINGTON
DEC 1
LIBRARY

FIG. 7 - CHANGE OF RANGE AND SENSITIVITY OF LOW SCALE AVAILABLE WITHIN RANGE OF SENSITIVITY CONTROL WITHOUT OTHER CHANGES IN INSTRUMENT

(200)
R290
no. 351

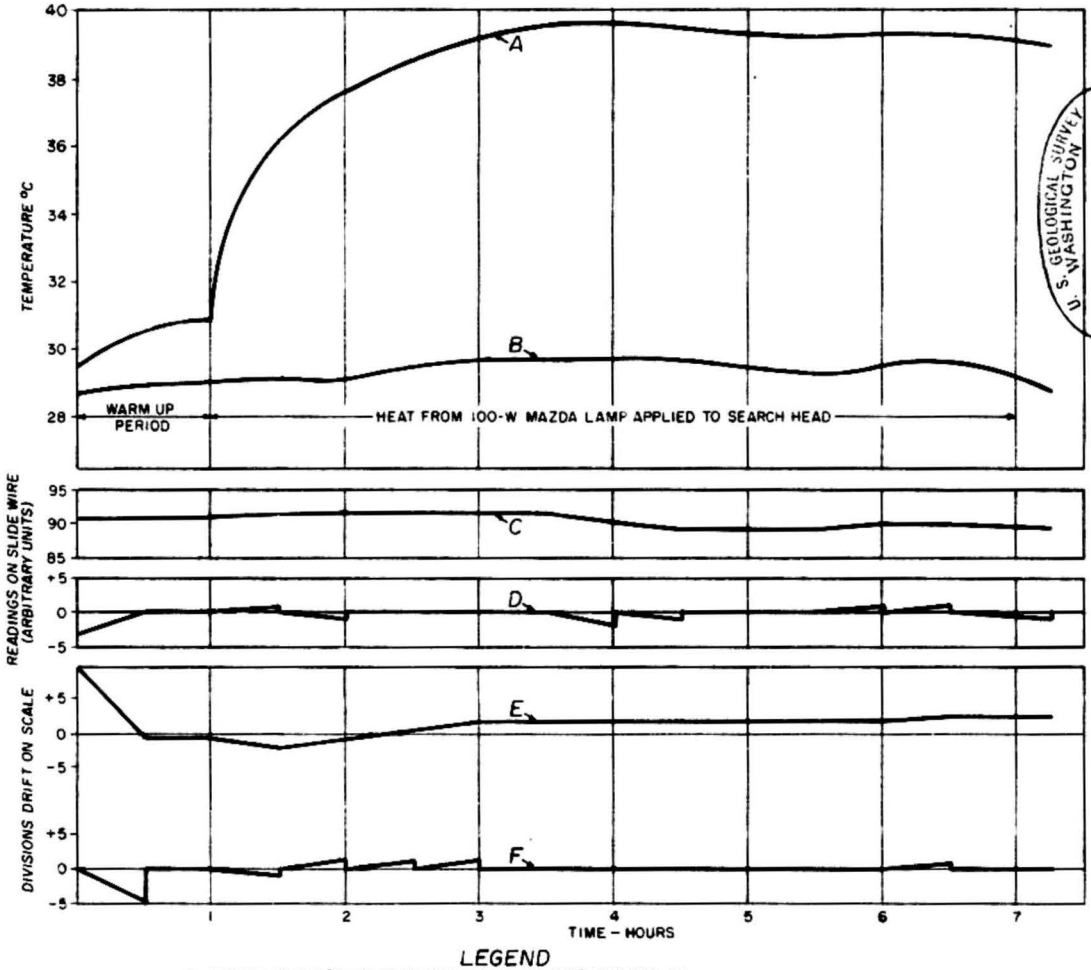

U. S. GEOLOGICAL SURVEY WASHINGTON
DEC 1 5 1955
LIBRARY

LEGEND

A- TEMPERATURE °C INSIDE SEARCH HEAD, AS HEAT WAS APPLIED.
B- ROOM TEMPERATURE °C
C- VARIATION OF SLIDE WIRE DIAL READINGS OF GLASS STANDARD AS TUBE WAS HEATED.
D- DIVISIONS DRIFT OF POINTER ON ZERO-CENTER METER WHEN READING GLASS STANDARD.
E- DARK CURRENT DRIFT DURING HEATING PERIOD (SPECIAL SCALE ON DARK CURRENT KNOB TO ENABLE MEASUREMENT).
F- DIVISIONS DRIFT OF POINTER ON ZERO-CENTER METER WHEN SET ON DARK CURRENT

FIG. 8- EFFECT OF TEMPERATURE CHANGE (28 to 40°C) ON STABILITY OF PHOTOTUBE AND REPRODUCIBILITY OF INSTRUMENT READINGS