(200)
R290
no. 76-737

Compiled by Maurice J. Grolier and William C. Overstreet, U. S. Geological Survey, and based on:

A. Geologic interpretation of LANDSAT-1 images, supplemented by reconnaissance airborne and field surveys in June and July 1975.

B. References, as follows:

Brown, G. F., 1970, Eastern margin of the Red Sea and coastal structures in Saudi Arabia: Roy. Soc. London Phil. Trans., v. 267, p. 75-87

_____, and Jackson, R. O., 1959, Geology of the Asir quadrangle, Kingdom of Saudi Arabia: U.S. Geol. Survey Misc. Geol. Inv. Map I-217A, scale 1:500,000

Coleman, R. G., Fleck, R. J., Hedge, C. E., and Ghent, E. D., in press, The volcanic rocks of southwest Saudi Arabia and the opening of the Red Sea: Saudi Arabia Dir. Gen. Mineral Resources, Red Sea Vol.

Cox, L. R., 1931, The geology of the Farsan Islands, Gizan, and Kamaran Island, Red Sea, Part 2, Molluscan Paleontology: Geol. Magazine, v. 68, p. 1-13.

Dodge, F. C. W., and Rossman, D. L., 1975, Mineralization of the Wadi Qatan area, Kingdom of Saudi Arabia: U.S. Geol. Survey open file rept. 75-309, 71 p.

Geukens, F., 1966, Geology of the Arabian Peninsula, Yemen: U. S. Geol. Survey Prof. Paper 560-B, 23 p., incl. geol. map, scale 1:1,000,000

Gillmann, M., Letullier, A., and Renouard, G., 1966, La Mer Rouge: Geologie et probleme pétrolier: Revue de l'Inst. Franc. Petrole, v. 21, no. 10, p. 1467-1487, illus.

Goerlich, F. Von, 1956, Mikropälontologische und stratigraphische Untersuchungen im Königreich Yemen: Paläont. Zeit., v. 30, p. 213-214.

Greenwood, J. E. G. W., Bleackley, D., and Beydoun, Z. R., 1967, Photogeological Map of Western Aden Protectorate: Overseas Geol. Surveys, London, 2 sheets, scale 1:250,000

Greenwood, W. R., Hadley, D. G., Anderson, R. E., Fleck, R. J., and Schmidt, D. W., in press, Late Proterozoic cratonization in southwestern Saudi Arabia: Royal Soc. London

Heybroek, F., 1965, The Red Sea Miocene evaporite basin, in Salt Basins around Africa: The Institute of Petroleum, London, p. 17-40.

Hotchkiss, Henry, 1963, Petroleum developments in Middle East and adjacent countries in 1962: Am. Assoc. Petroleum Geol. Bull., v. 47, no. 7, p. 1420-1421, fig. 11.

Karrenberg, H., 1959, Yunger Magmatismus in Südwest Arabien (Jemen): Techn. Mitt. Krupp, v. 17, no. 1, p. 33-36

MacFayden, W. A., 1930, The geology of the Farsan Islands, Gizan, and Kamaran Island, Red Sea, Part 1, General Geology: Geol. Magazine, v. 67, p. 310-315.

Overstreet, W. C., and Rossman, D. G., 1970, Reconnaissance geology of the Wadi Wassat quadrangle, Kingdom of Saudi Arabia: U. S. Geol. Survey open file rept. (IR) SA-117, 68 p.

Rathjens, Carl, and Wissman, H. V., 1934, Südarabien Reise, Landeskundliche Ergebnisse: Friedericksen, de Gruyter and Co., M. B. H., Hamburg, v. 2 and 3

_____, 1942, Beobachtungen in Yemen: Geologische Rundschau, v. 33, p. 248-279

Shukri, N. M., and Basta, E. Z., 1955, Petrography of the alkaline rocks of Yemen: L'Institut d'Egypte Bull., v. 36, p. 129-163

U. S. Geol. Survey, and Arabian American Oil Company, 1963, Geologic Map of the Arabian Peninsula: U. S. Geol. Survey Misc. Geol. Inv. Map I-270A, scale: 2,000,000

NOTES

Copies of this map are available at the Ministry of Economic Development, Minerals and Petroleum Authority, San'a, Yemen Arab Republic, and at the U. S. Geological Survey, Washington, D. C., U. S. A. The base for this map is a two-, or three-band (5,7; or 4,5,7) false-color composite of the LANDSAT-1 image indexed hereby, and is available in a black and white positive print at the same places.

Indicated positions of boundary lines not demarcated on the ground are not necessarily definitive. Abbreviations: YAR - Yemen Arab Republic; PDRY - Peoples' Democratic Republic of Yemen.

GEOLOGIC EXPLANATION

Double or fractional symbols indicate grouped formations: Symbols queried where identification doubtful.

CORRELATION OF MAP UNITS

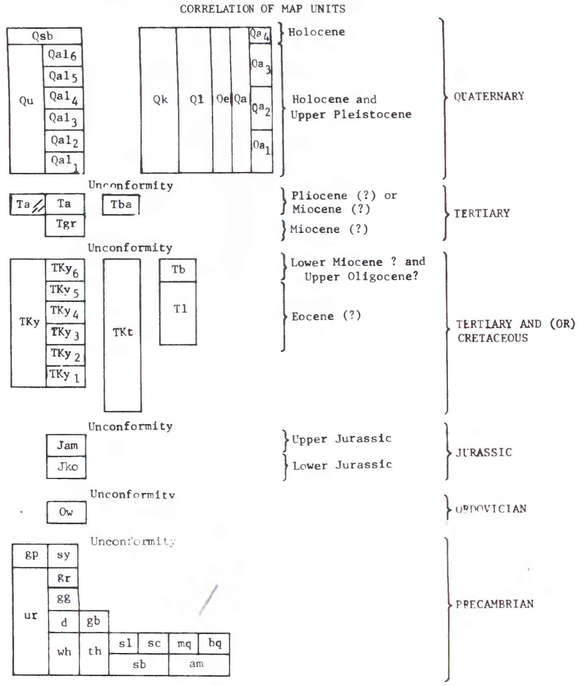

GEOLOGIC MAP SYMBOLS

Geologic contact

Fault - Showing relative horizontal movement U, upthrown side; D, downthrown side; dashed where approximately located

Lineament

Showing major lineament, possibly a fault

Showing linear or curved trends of uncertain nature or origin: in regions of granitic and sedimentary rocks, most likely to be joints or faults not readily detected on LANDSAT-1 images; in regions of metamorphic rocks, most likely joints or foliation trends

Anticline - Showing trace of axial plane and bearing and plunge of axis

Syncline - Showing trace of axial plane and bearing and plunge of axis

Monocline - Showing trace of axis; arrows indicate downfolded side

Strike and dip of bedding

Strike and dip of foliation

Small volcanic plug

Structurally controlled volcanic alignment, or curved volcanic trend; of Tertiary or Quaternary age

Large volcanic crater rimcrest

Dune Crest

Coral reef

Mineral Deposit

x Fe Locality of mineral deposit shown by position of symbol; kind of deposit shown by abbreviations, as follows:

Cu, Ni, Copper- and nickel-bearing sulfide vein. Evidence of ancient mining, possibly for copper and gold.

Sn, Cassiterite-bearing quartz veins in granite; no evidence of mining

Fe, Limonite, goethite, and hematite in gossan formerly mined for iron ore; stratigraphic position and appearance of deposit resembles gossan exposed to the north in Saudi Arabia at Wadi Wassat (Overstreet, and Rossman, 1970), and Wadi Qatan (Dodge, and Rossman, 1975).

x Sal Salt

x F Fossils

Abandoned exploratory oil well (Hotchkiss, 1963, p. 1421).

Screened geologic features shown on sheet 2 of 2 have not been field checked.

DESCRIPTION OF MAP UNITS

Geologic names and symbols given below apply to the whole area of the Yemen Arab Republic; some names and symbols may not appear on the geologic map of an area covered by an individual LANDSAT-1 image. Names and descriptions of geologic units, unless otherwise noted, are adopted from U.S. Geological Survey and Arabian American Oil Company, 1963, Geologic map of the Arabian Peninsula; U.S. Geol. Survey Misc. Geol. Inv. Map 270-A, and Brown, G. F., and Jackson, R. O., 1959, Geology of the Asir quadrangle, Kingdom of Saudi Arabia: U.S. Geol. Survey Misc. Geol. Inv. Map 217-A.

Qsb Silt, clay, and muddy sand; commonly saturated with brine and salt encrusted; in mud flats (sabkhas) along the Red Sea coast

Qu River terrace deposits, alluvial fans, gravel, sand, and silt including unmapped alluvium which overlies rock salt at Jabal Kushah, near Guma; numerous loess deposits particularly in the central plains. Wherever possible, alluvial deposits have been divided regionally on a basis of reflectance, natural vegetation and crops, altitude, and location into six sub-units, as follows:

Qal_6, alluvial gravel, sand, and silt restricted to channels and flood plains of present-day ephemeral streams

Qal_5, alluvial gravel, sand, and silt on river terraces and fans, adjacent to and higher than the flood plains of present-day streams; generally darker than Qal_6; may include colluvium at base of foothills

Qal_4, same as above, but darker, and possibly older

Qal_3, same as Qal_4, but higher and older

Qal_2, same as Qal_3, but higher and farther inland from the Red Sea Coast

Qal_1, alluvial gravel heavily coated with desert varnish, restricted to dissected river terraces on the south valley slope of Wadi Jawf, north of Jabal Bahra and west of Wadi Raghwan

Qk Yellow and green marly limestone, white limestone, and reef limestone, undifferentiated, exposed on Kamaran Island. Fossiliferous, and of probable Pleistocene age (MacFadyen, 1930; Cox, 1931). Probably correlatiwe with unmapped marine terrace deposits which disconformably overlie Plio-Miocene tuffaceous sandstone at the Al Luhayyah diapirs

Ql Loess deposits, with calcareous concretions and caliche layers; fossil mollusks abundant locally; may include alluvial silt alternating with alluvial or colluvial gravel

Qe Eolian sand, commonly mobile

Qa Basalt flows and dikes; numerous scattered cones and craters; at places covered with tuff and volcanic bombs. May be rock and time equivalent of the Aden Volcanic Series in the People's Democratic Republic of Yemen; in the San'a region, lava flows have been divided regionally on a basis of reflectance into four sub-units, as follows:

Qa_4, very dark basaltic lobate flows, extruded in historical times, possibly in 3rd century A. D. (Rathjens, C., and Wissman, H. V., 1934, v. 2, p. 13; v. 3., p. 105, fig. 51; p. 162-163; Rathjens, C., and Wissman, 1942, v. 33, p. 276)

Qa_3, dark basaltic flows

Qa_2, thin basalt flows, discontinuous over older rocks; appear lighter gray than units Qa_3 and Qa_4 on LANDSAT-1 images

Qa_1, basalt flows forming a continuous mantle over older rocks; Qa_1 and Qa_2 possible are part of only one eruption phase

Tba BAID FORMATION--Gray, red, and green siliceous and tuffaceous shale and sandstone; also limestone and evaporite layers. Includes rock salt of salt domes at Salif and Jabal Qimmah, and at Jabal Kushah near Guma. Generally unfossiliferous, but middle to late Miocene microflora reported by Klaus (in Heybroek, 1965, p. 34-35) from rock salt at Jabal Kushah, and at Salif, and late Pliocene microfauna reported from marine sediments overlying salt (Goerlich, 1956, p. 213-214). Correlated with rocks of the Baid Formation exposed in Wadi Baid, Saudi Arabia, because of similar lithology (Gillmann, Letullier, and Renouard, 1966, p. 1479-1480, pl. 1, fig. 4).

Ta Hypabyssal andesite and diabase intrusives, commonly glomeroporphyritic, and in dike swarms

Tgr Alkali granite and diorite in subvolcanic plugs, stocks, and plutons (Karrenberg, 1959, v. 17, no. 1, p. 33-36); leucocratic granite locally has primary flow banding. Crests of unbreached plugs may be overlain by hydrothermally altered rocks of the Yemen Volcanics, locally in northwestern part of the Yemen Arab Republic mapped as Tertiary laccoliths (U.S. Geol. Survey and Arabian American Oil Co., 1963). Some granitic plutons as at Jibal Sabir, south of Taiz, have syenite margins. A K-Ar age of 22.7 ± 0.9 m.y. is reported for a granite sample from Jibal Sabir collected by R. O. Jackson (Field No. ROJ-1), and analysed by R. F. Marvin, H. H. Mehnert, and Violet Merritt (Marvin, 1974, written commun. to G. F. Brown). A similar K-Ar age (22.0 ± 0.7 m.y.) is reported by Marvin (1974, written commun. to Brown) for a syenite sample which had been collected from a plug cutting a laterite deposit in the Sirat Plateau, Saudi Arabia, by Brown (Field No. 519B).

Tb Alkali basalt flows. Erosional remnants on laterite (Tl) developed over Precambrian crystalline rocks; basalts probably equivalent to As Sirat Volcanic rocks of Saudi Arabia (Coleman, and others, 1975) for which isotopic ages of 25 to 29 m.y. are reported (Brown, 1970, p. 75-87); may be equivalent to Yemen volcanics sub-unit KTy_6

Tl Laterite and saprolite, mainly white, may be yellow or red, developed on upper surface of Precambrian crystalline rocks by prolonged weathering during Eocene (?) time, to 50 meters in thickness; probably equivalent to laterite in As Sirat Mountains, Saudi Arabia (Brown and others, 1959)

TKy YEMEN VOLCANICS, undivided--Bedded alkalic flows and pyroclastic rocks including but not restricted to rhyolite, comendite, pantellerite, trachyte, andesite, basalt, and ankaramite (Shukri and Basta, 1955, v. 36, p. 129-163), with interbedded lenticles of fluviatile and lacustrine sand, clay, and shale; locally contains fresh-water Oligocene-Miocene fossils; upper surfaces of many volcanic beds weather to reddish paleosols a few centimeters to a few meters thick, particularly in middle and upper parts of the sequence; whole sequence of Yemen Volcanics at least 2,000 meters thick. Term Yemen Volcanics introduced here to replace former name Trap Series (Geukens, 1966), to emphasize presence of thick sequence of highly fractionated felsic volcanic rocks. Wherever possible, the Yemen Volcanics have been divided regionally on basis of reflectivity and stratigraphic succession into six sub-units, as follows:

TKy_6, dark basaltic flows;

TKy_5, generally leucocratic felsic tuffs with some dark basaltic flows, associated with the formation and collapse of a circular volcanic structure, 8.5 km in diamater, in the north-central part of the area covered by LANDSAT-1 image 1189-06561;

TKy_4, predominantly felsic and tuffaceous, with some basaltic flows, underlies TKy_6 and TKy_5;

TKy_3, predominantly felsic and tuffaceous; older than TKy_4;

TKy_2, predominantly felsic and tuffaceous; older than TKy_3;

TKy_1, predominantly basaltic, but includes green felsic conglomerate, porphyritic trachyte, and pink tuffs; overlies the Tawilah Group.

In certain areas the rock types are shown on the maps by symbols without definite boundaries, owing to the uncertainty of establishing the contact between sub-units or between a sub-unit and the undivided Yemen Volcanics on the basis of reflectance.

TKt TAWILAH GROUP AND MEDJ-ZIR SERIES undivided--Continental type coarse crossbedded sandstone with lenses of conglomerate and gravel; interbedded shale and sandstone in lower part; overlies rocks of Jurassic age or the basement complex; includes the Medzir Series, consisting of crossbedded sandstone with locally fossiliferous calcareous sandstone and shale; upper part of sandstone locally rich in hematite; the Med-zir Series cannot be separated with certainty from the Tawilah Group on basis of stratigraphic relations or reflectance

Jam AMRAN SERIES--Limestone, marl, and shale; lower part locally includes detrital beds. The series is overlain by a less widespread Upper Jurassic transition zone of gypsum, clay, marl, shale, sandstone, and some limestone. Of Callovian to Kimmeridgian age. In the extreme northwestern part of the Yemen Arab Republic formerly designated the Hanifa Formation (Brown and Jackson, 1959)

Jko KOHLAN SERIES--Green shale with sandstone and conglomeratic bands in lower part; sandstone and some conglomerates in upper part. Contact with overlying Amran Series is gradational. May be in part Triassic in age; in the extreme northwestern part of the Yemen Arab Republic, formerly designated as the Khums Formation (Brown and Jackson, 1959)

Ow WAJID SANDSTONE--Partly crossbedded, locally conglomeratic sandstone; includes common quartz granule and pebble zones; of Ordovician age (Brown, 1970); formerly designated as Permian or older (U.S. Geol. Survey, and Arabian American Oil Co., 1963)

gp Peralkaline granite, gp, and syenite, sy, generally

sy in circular plugs, stocks, and ring dikes

gr Calc-alkaline granite, gray and pink, generally massive; includes some quartz monzonite; may have been intruded during second and third episodes of the Hijaz tectonic cycle recognized in southwestern Saudi Arabia (Greenwood and others, 1975, p. 23)

gg Gneissic granite, gneissic granodiorite, and injection gneiss; commonly intruded by swarms of mafic dikes, contains numerous septa and inclusions of schist and gneiss; may have been intruded during second episode of Hijaz tectonic cycle

d **gb** Diorite, d, and gabbro, gb; may have been intruded during second episode of the Hijaz tectonic cycle

sc **sl** Slate, pelitic schist, and quartzite, sl; chlorite-schist, graphitic schist, sc; low-grade metamorphosed sedimentary rocks possibly of second and first episodes of Hijaz tectonic cycle

mq **bq** Marble, quartzite, and biotite gneiss, mq; biotite schist, biotite gneiss, and quartzite, bq, intruded by dikes of gneissic pink granite, diorite, and gabbro; medium- and high-grade metamorphosed sedimentary rocks possibly of second and first episodes of Hijaz tectonic cycle

am **sb** Mafic volcanic and metavolcanic rocks, with some interlayered metagraywacke and metaconglomerate, consisting of andesite, meta-andesite, metabasalt, greenstone, and chlorite schist, sb; hornblende gneiss, and amphibolite, am; possibly of second and first episodes of Hijaz tectonic cycle

ur Predominantly granite, gneiss, and mica schist with subordinate quartzite, hornblende schist, and marble

wh Chlorite-sericite schist, amphibole schist, graphite schist, marble, quartzite, slate, conglomerate, and greenstone

th Thaniya Group, contorted and cleaved metasediments consisting of graphitic calc-schist, quartzite, phlogopite marble, chert, and associated volcanics

NOTE

The gossans in the Kingdom of Saudi Arabia at Wadi Wassat (Overstreet and Rossman, 1970), and at Wadi Qatan (Dodge and Rossman, 1975) were formed over extensive deposits of stratabound massive and disseminated pyrite and pyrrhotite in Precambrian volcanogenic rocks. Should the iron deposits near Sa'dah, which are known to extend tens of kilometers northward, and similar deposits gossans over massive sulfide, then the region mined for iron northward from the vicinity of Sa'dah and Majadh to the border between the Yemen Arab Republic and the Kingdom of Saudi Arabia merit geologic, geophysical, and geochemical exploration for base metals, nickel, silver, gold and molybdenum.

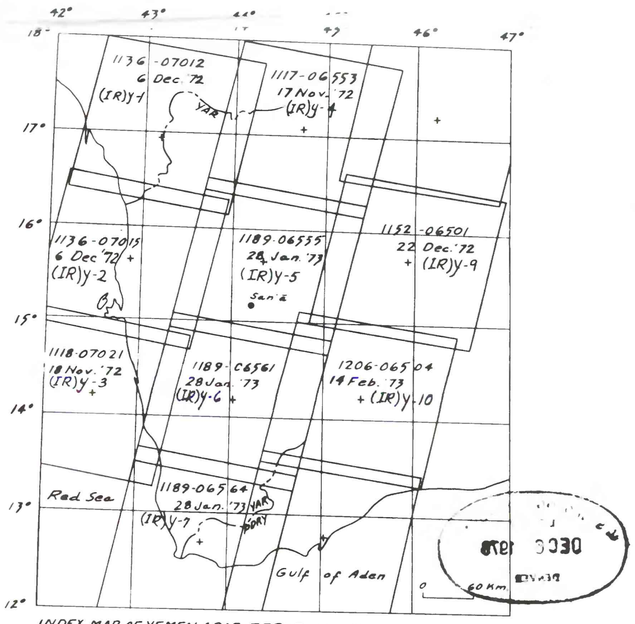

INDEX MAP OF YEMEN ARAB REPUBLIC - Showing location of Landsat-1 images used as bases for the geologic investigation maps published by the U.S. Geological Survey. Scale 1:500,000

DEC 1976