UNITED STATES
DEPARTMENT OF THE INTERIOR
GEOLOGICAL SURVEY

COMPOSITE COLUMNAR SECTION

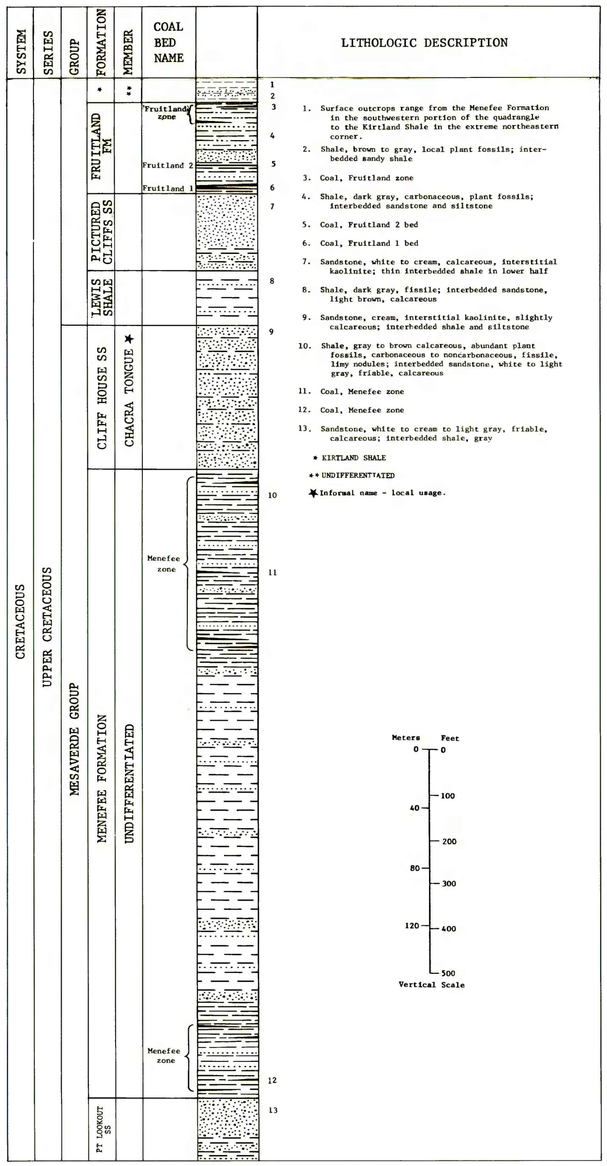

1. Surface outcrops range from the Menefee Formation in the southwestern portion of the quadrangle to the Kirtland Shale in the extreme northeastern corner.
2. Shale, brown to gray, local plant fossils; interbedded sandy shale
3. Coal, Fruitland zone
4. Shale, dark gray, carbonaceous, plant fossils; interbedded sandstone and siltstone
5. Coal, Fruitland 2 bed
6. Coal, Fruitland 1 bed
7. Sandstone, white to cream, calcareous, interstitial kaolinite; thin interbedded shale in lower half
8. Shale, dark gray, fissile; interbedded sandstone, light brown, calcareous
9. Sandstone, cream, interstitial kaolinite, slightly calcareous; interbedded shale and siltstone
10. Shale, gray to brown calcareous, abundant plant fossils, carbonaceous to noncarbonaceous, fissile, limy nodules; interbedded sandstone, white to light gray, friable, calcareous
11. Coal, Menefee zone
12. Coal, Menefee zone
13. Sandstone, white to cream to light gray, friable, calcareous; interbedded shale, gray

* KIRTLAND SHALE

** UNDIFFERENTIATED

★ Informal name - local usage.

CORRELATION OF COAL BEDS IN DRILL HOLES AND MEASURED SECTIONS

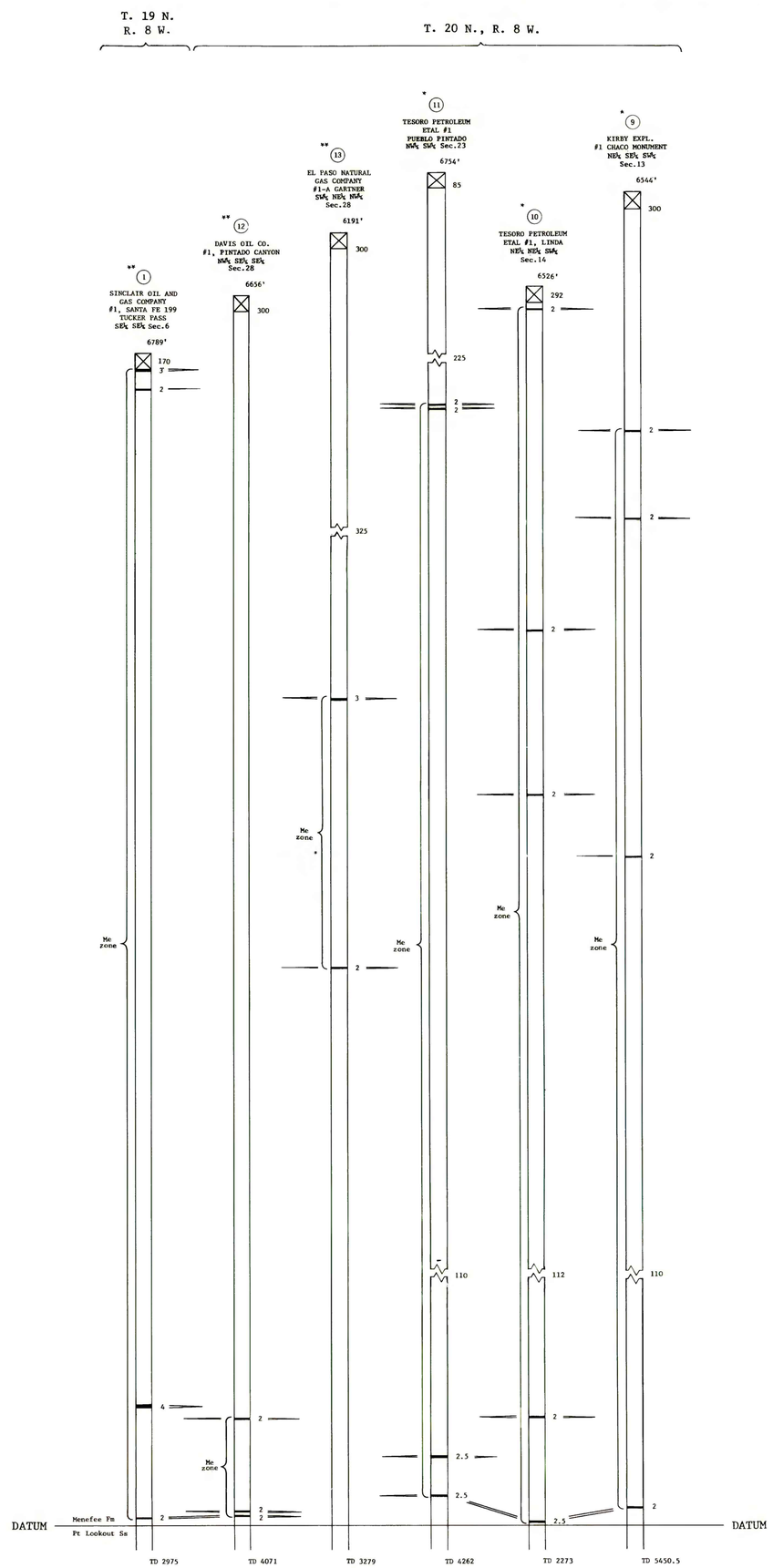

EXPLANATION

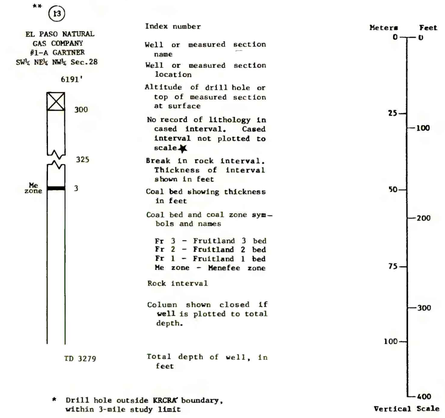

Index number

Well or measured section name

Well or measured section location

Altitude of drill hole or top of measured section at surface

No record of lithology in cased interval. Cased interval not plotted to scale ★

Break in rock interval. Thickness of interval shown in feet

Coal bed showing thickness in feet

Coal bed and coal zone symbols and names

Fr 3 - Fruitland 3 bed
Fr 2 - Fruitland 2 bed
Fr 1 - Fruitland 1 bed
Me zone - Menefee zone

Rock interval

Column shown closed if well is plotted to total depth.

Total depth of well, in feet

* Drill hole outside KRCRA boundary, within 3-mile study limit

** Drill hole outside KRCRA and 3 mile limit, within study area boundary.

★ An average depth of casing of 300 ft (91 m) was used. Actual depth of casing not shown.

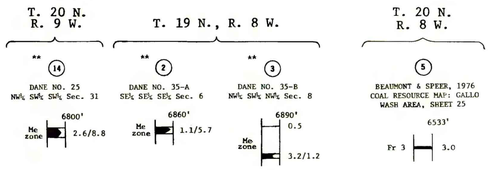

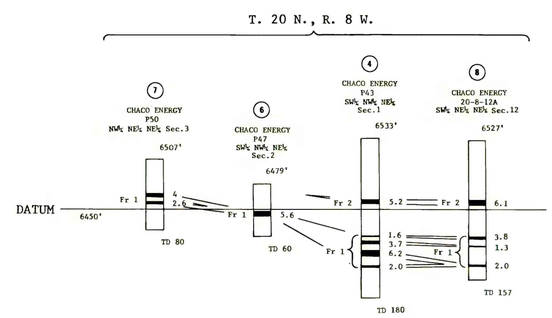

OPEN FILE REPORT 79-113
PLATE 3 OF 12

This map was prepared under contract to the U.S. Geological Survey and has not been edited for conformity with Geological Survey editorial standards. Opinions and conclusions expressed herein are those of the contractor and do not necessarily represent those of the Geological Survey.

Compiled in 1978

PLATE 3
COAL DATA SHEET

COAL RESOURCE OCCURRENCE MAP OF THE PUEBLO PINTADO QUADRANGLE, McKINLEY COUNTY, NEW MEXICO

BY
DAMES & MOORE

1979