UNITED STATES
DEPARTMENT OF THE INTERIOR
GEOLOGICAL SURVEY

ROUND BOTTOM QUADRANGLE
COLORADO—MOFFAT CO.
7.5 MINUTE SERIES (TOPOGRAPHIC)
NW/4 MONUMENT BUTTE 15' QUADRANGLE

OPEN FILE REPORT 79-814

PLATE 4 OF 6

107°45' — 42'30" — 40' — 107°37'30" — 40°30'

A.D.I.R. MAP-COAL BED [89]
INDEX NUMBER (8)

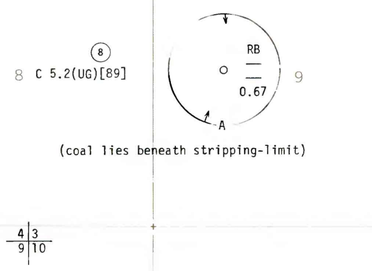

A.D.I.R. MAP-COAL BED [90]
INDEX NUMBER (31)

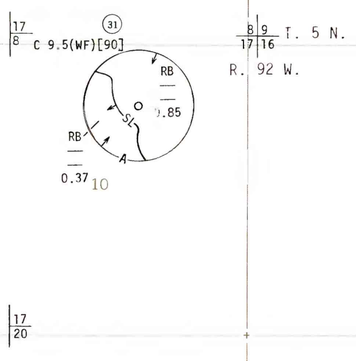

A.D.I.R. MAP-COAL BEDS [91] AND [92]
INDEX NUMBER (27)

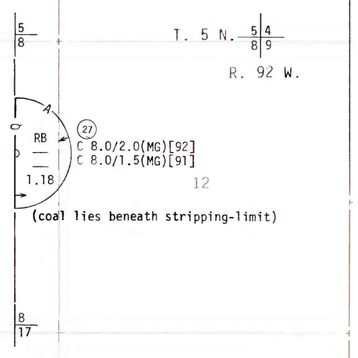

A.D.I.R. MAP-COAL BED [93]
INDEX NUMBER (27)

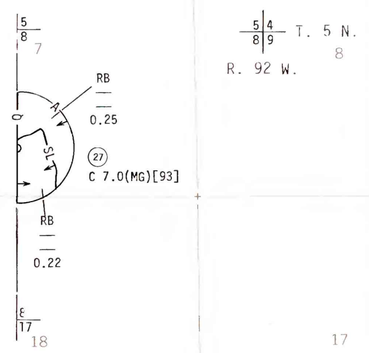

A.D.I.R. MAP-COAL BED [94]
INDEX NUMBER (27)

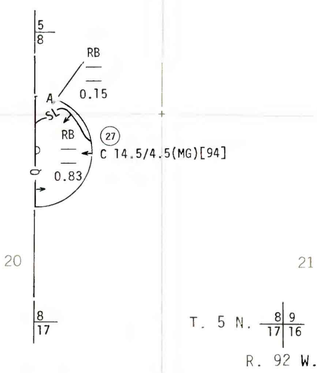

A.D.I.R. MAP-COAL BED [95]
INDEX NUMBER (27)

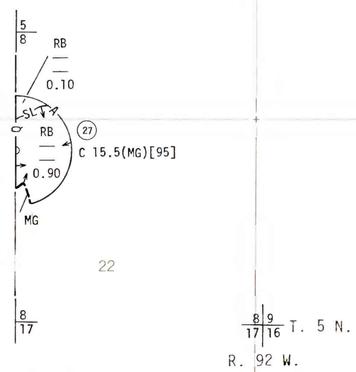

A.D.I.R. MAP-COAL BEDS [96] TO [103]
INDEX NUMBER (26)

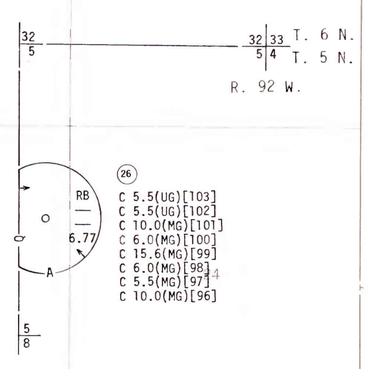

A.D.I.R. MAP-COAL BED [106]
INDEX NUMBER (24)

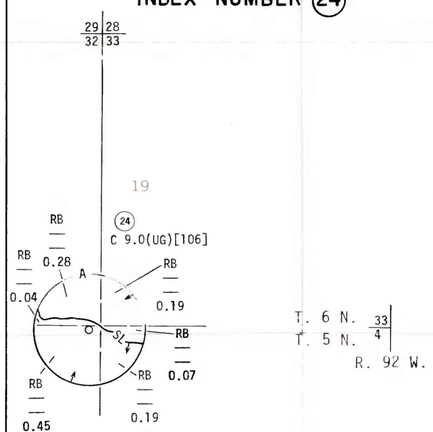

A.D.I.R. MAP-COAL BEDS [107] AND [108]
INDEX NUMBER (64)

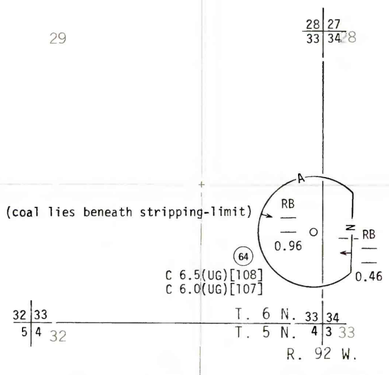

A.D.I.R. MAP-COAL BEDS [112] TO [115]
INDEX NUMBER (65)

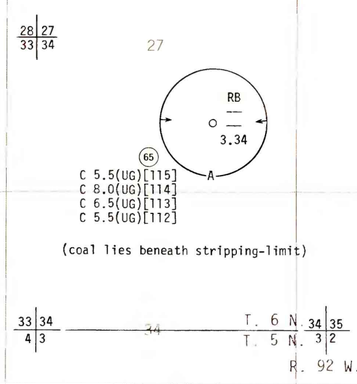

A.D.I.R. MAP-COAL BED [116]
INDEX NUMBER (65)

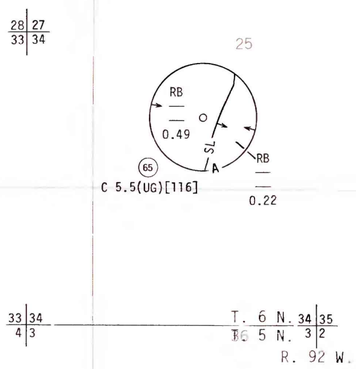

A.D.I.R. MAP-COAL BEDS [118] TO [121]
INDEX NUMBER (49)

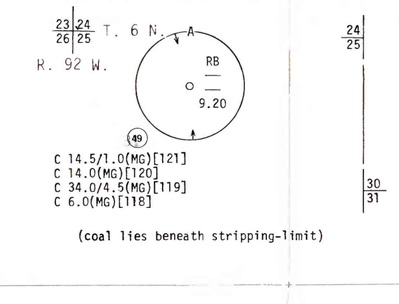

A.D.I.R. MAPS [123] TO [127]
INDEX NUMBER (1)

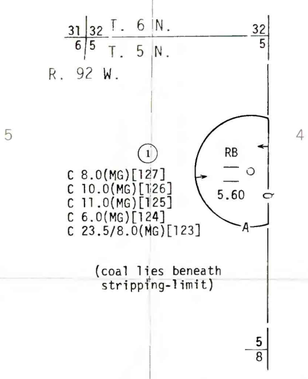

A.D.I.R. MAP-COAL BEDS [130] TO [132]
INDEX NUMBER (30)

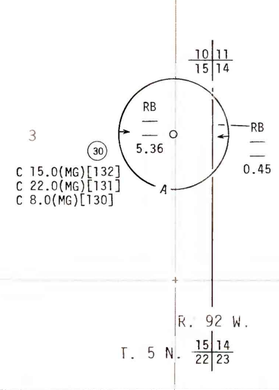

A.D.I.R. MAP-COAL BED [134]
INDEX NUMBER (30)

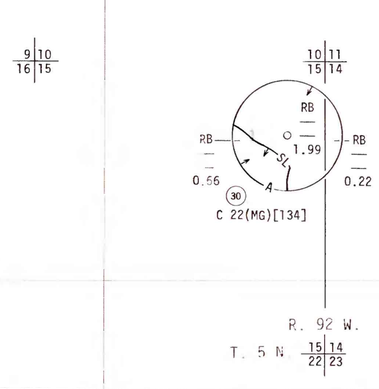

A.D.I.R. MAP-COAL BEDS [135] TO [142]
INDEX NUMBER (18)

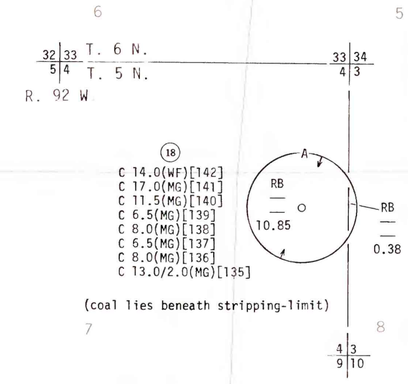

A.D.I.R. MAP-COAL BED [143]
INDEX NUMBER (18)

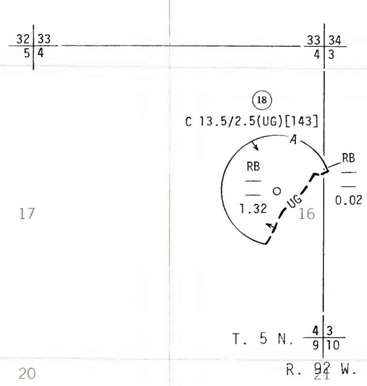

A.D.I.R. MAP-COAL BEDS [144] TO [147]
INDEX NUMBER (63)

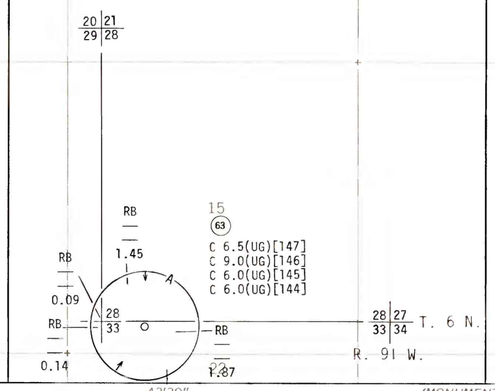

A.D.I.R. MAP-COAL BED [148]
INDEX NUMBER (63)

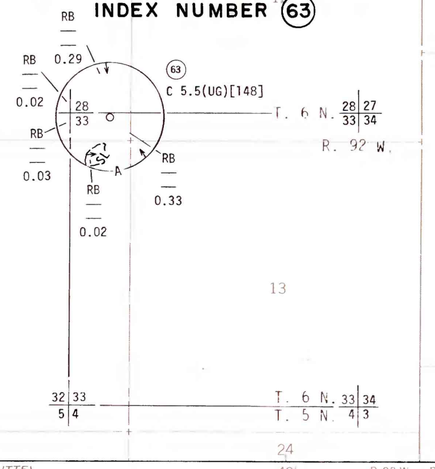

A.D.I.R. MAP-COAL BEDS [149] AND [150] INDEX NUMBER (42)

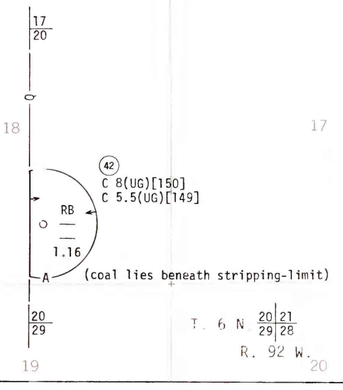

40°22'30" — 107°45' — 42'30" — (MONUMENT BUTTE) 4464 I SW — 40' — R 92 W — R 91 W — 107°37'30" — 40°22'30"

Base from U.S. Geological Survey, 1966

Compiled in 1979

SCALE 1:24 000

1 MILE
1000 0 1000 2000 3000 4000 5000 6000 7000 FEET
1 KILOMETER

UTM GRID AND 1966 MAGNETIC NORTH DECLINATION AT CENTER OF SHEET

COLORADO
QUADRANGLE LOCATION

This report has not been edited for conformity with U.S. Geological Survey editorial standards or stratigraphic nomenclature.

COAL RESOURCE OCCURRENCE MAP OF THE ROUND BOTTOM QUADRANGLE, MOFFAT COUNTY, COLORADO

BY

DAMES & MOORE

1979

PLATE 4
SHEET 3 OF 4
AREAL DISTRIBUTION AND IDENTIFIED RESOURCES MAP OF NON-ISOPACHED COAL BEDS