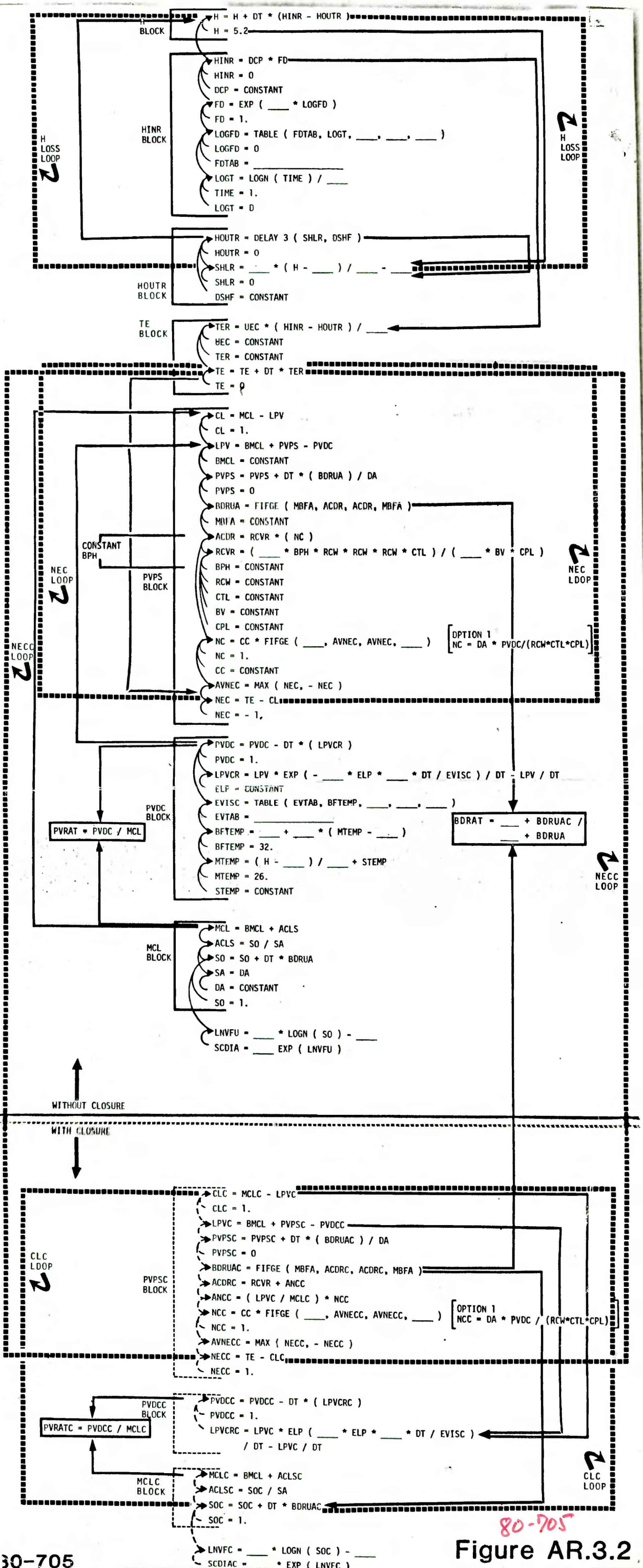

80-705

Figure AR.3.2