USER'S MANUAL FOR THE CONVERSION AND VALIDATION OF UNIT-VALUES SITE-INDEX DATA FOR THE MASTER WATER DATA INDEX OF THE NATIONAL WATER INFORMATION SYSTEM OF THE U.S. GEOLOGICAL SURVEY

By Scott H. Beddingfield

U.S. GEOLOGICAL SURVEY

Open-File Report 88-189

Baton Rouge, Louisiana

1988

DEPARTMENT OF THE INTERIOR

DONALD PAUL HODEL, Secretary

U.S. GEOLOGICAL SURVEY

Dallas L. Peck, Director

For additional information write to:

District Chief
U.S. Geological Survey
P.O. Box 66492
Baton Rouge, LA 70896

Telephone: (504) 389-0281

U.S. Geological Survey
Branch of Computer
Technology, MS-440
12201 Sunrise Valley Dr.
Reston, VA 22092

Copies of this report can be purchased from:

U.S. Geological Survey
Books and Open-File Reports
Federal Center, Bldg. 810
Box 25425
Denver, CO 80225

CONTENTS

Page

Abstract 1
Introduction 1
Background 1
Purpose and scope 2
Section 1. General information 2
1.1. Summary 2
1.2. Hardware environment 2
Section 2. Application 2
2.1. Description 2
2.2. Operation 3
2.3. Equipment 3
2.4. Structure 3
2.5. Data bases 3
Section 3. Procedures and requirements 5
3.1. Execution 5
3.2. Input 6
3.3. Output 9
3.3.1. Output formats 9
3.3.2. Sample outputs 9
3.4. Error and recovery 9
Section 4. Selected references 9
Appendices:
A. Pseudo code A-1
B. Visual table of contents organizational chart B-1
C. Input file formats C-1
D. Output file formats D-1
E. Example output listings E-1

ILLUSTRATIONS

Figure 1. Diagram showing data flowing in and out of program IXCVUV.DB .. 4
2. Job control language (JCL) used to retrieve WATSTORE data 6
3. Job control language (JCL) used to sort WATSTORE data retrieved using program H572 7
4. Job control language (JCL) used to execute program IXCVUV.DB .. 8

USER'S MANUAL FOR THE CONVERSION AND VALIDATION OF UNIT-VALUES SITE-INDEX DATA FOR THE MASTER WATER DATA INDEX OF THE NATIONAL WATER INFORMATION SYSTEM OF THE U.S. GEOLOGICAL SURVEY

By Scott H. Beddingfield

ABSTRACT

This report describes the information needed to execute the program for the conversion and validation of unit-values site-index data for the Master Water Data Index (MWDI) of the National Water Information System (NWIS) developed by the U.S. Geological Survey. Included in this document are sections that describe (1) the environment within which the program needs to be run, (2) the general data flow into and out of the program, (3) the equipment necessary to successfully execute the program, (4) the program structure, (5) the data bases used by the program, (6) the procedure used to execute the program, including examples of the job control language (JCL) used during the procedure, (7) the input used and output generated by the program, and (8) the error and recovery procedures. In the appendices of this document are the pseudo code describing the logic of the program, a visual table of contents (VTOC) organization chart, detailed input and output data formats for all of the files used by the program, and examples of the output listings generated by the program.

INTRODUCTION

Background

The Master Water Data Index (MWDI) of the National Water Information System (NWIS) of the U.S. Geological Survey serves as a mechanism for documenting the existence and location of site-specific water data stored in the NWIS. The MWDI also contains information about water data and meteorological data available from other organizations throughout the scientific community. The existing MWDI data base of the U.S. Geological Survey's National Water Data Exchange (NAWDEX) is currently used for this purpose, but no longer fulfills all of the needs of the scientific community. The MWDI of the NWIS is a version of the MWDI of the NAWDEX that also contains data from the National Water Data Storage and Retrieval System (WATSTORE) Station Header File and Ground-Water Site Inventory (GWSI) that has been modified to satisfy those unmet needs. To populate the unit-values site-index data base of the MWDI of the NWIS with data from the MWDI of the NAWDEX and the WATSTORE files, a computer program was written.

The development of the program was sponsored by the Branch of Computer Technology, Office of the Assistant Chief Hydrologist for Scientific Information Management, Water Resources Division, U.S. Geological Survey and was developed under the direction of the NWIS Project Office within the Branch of Computer Technology.

Purpose and Scope

This document is for personnel who will actually be running the program. This document describes information needed to properly set up and execute the software. This information includes (1) a general description of the program, its environment, and what it should do, (2) a general description of the data flow through the program, (3) a description of the hardware needed to run the program, (4) a description of the program structure through pseudo code and a visual table of contents (VTOC) organization chart, (5) a description of the data bases used in the program, (6) instructions for executing the software, including preliminary criteria which need to be met before executing the program, (7) descriptions of the input and output data to the program, (8) samples of output listings, and (9) error and recovery procedures.

SECTION 1. GENERAL INFORMATION

1.1 Summary

The program described in this document is used for converting unit-values site-index data and other surface-water data elements in the existing MWDI, WATSTORE Station Header File, and GWSI to formats suitable for establishment and loading of the MWDI of the NWIS; for the computation and validation of indexing information pertaining to unit values and other related surface-water data stored in the MWDI using data stored in the unit-values file of WATSTORE; for the computation of the frequencies of collection of unit-value data; and for the generation of transactions that document the existence of ground-water, quality-of-water, and meteorological data stored in the WATSTORE unit-values file for subsequent processing by other software programs. The specifications for the site-index data of the NWIS and those used to develop this program may be obtained by contacting the NWIS Project Office within the Branch of Computer Technology of the U.S. Geological Survey Headquarters Office in Reston, Virginia.

1.2 Hardware Environment

The unit-values conversion and validation program was developed for the AMDAHL V7[a] computer located at the U.S. Geological Survey, National Center, in Reston, Virginia. The program is written in PL/1, level F.

SECTION 2. APPLICATION

2.1 Description

This program, identified as IXCVUV.DB, is the second of a series of programs designed to convert, validate, and compute data stored in the MWDI of NAWDEX and in WATSTORE, and ultimately produce the MWDI of the NWIS. Each program can be run only after the successful completion of all of the programs preceding it because each subsequent program depends on data generated by the programs before it.

---

[a] The use of product or trade names in this report is for identification purposes only, and does not constitute endorsement by the U.S. Geological Survey.

Program IXCVUV.DB is designed to compare the output MWDI from the previous program in the series with unit-values data retrieved from WATSTORE, and regenerate the MWDI incorporating the changes indicated by the WATSTORE input. It is also designed to generate two new output files to be used in subsequent programs. One of these files is the surface-water frequency history file, and the other is the ground-water, quality-of-water, and meteorological transactions file. Printed output of each of the output files is generated for verification purposes, as are lists of data element counts on a per-state and per-run basis.

2.2 Operation

The general operation of the software, including input and output files is shown in figure 1. As figure 1 shows, data are input from two tape files, manipulated in program IXCVUV.DB, and output in various groups to produce three tape files and two types of listings. Then the three output tape files are read back into the program to generate listings of their respective contents.

2.3 Equipment

Program IXCVUV.DB is designed to run using the following equipment: The AMDAHL V7 computer of the USGS located at the National Center in Reston, Virginia; a terminal suitable for executing the software; five magnetic tape drives: two input drives and three output drives; one magnetic disk drive for storing work files; and one printer for producing printed output.

2.4 Structure

Structured programming and modularization of tasks is maintained, whenever possible, to make it easier to isolate any problems that might arise in the execution of the program.

The structure of program IXCVUV.DB can best be understood by studying the pseudo code and the VTOC organization chart (appendices A and B, respectively). The pseudo code shows the precise path that the program permits data to flow along, while the VTOC organizational chart gives a good idea of the various tasks being performed, and at what level of subordination the tasks are performed.

2.5 Data Bases

There are three data bases that the program IXCVUV.DB uses. They are the MWDI data base created from the MWDI of NAWDEX by the first program in this series; a data base of unit-values data generated from WATSTORE using program H572 of WATSTORE, and resorted in the proper order for the program to use; and a next available unique site identifier file. (See more about resorting the WATSTORE data in sec. 3.1.)

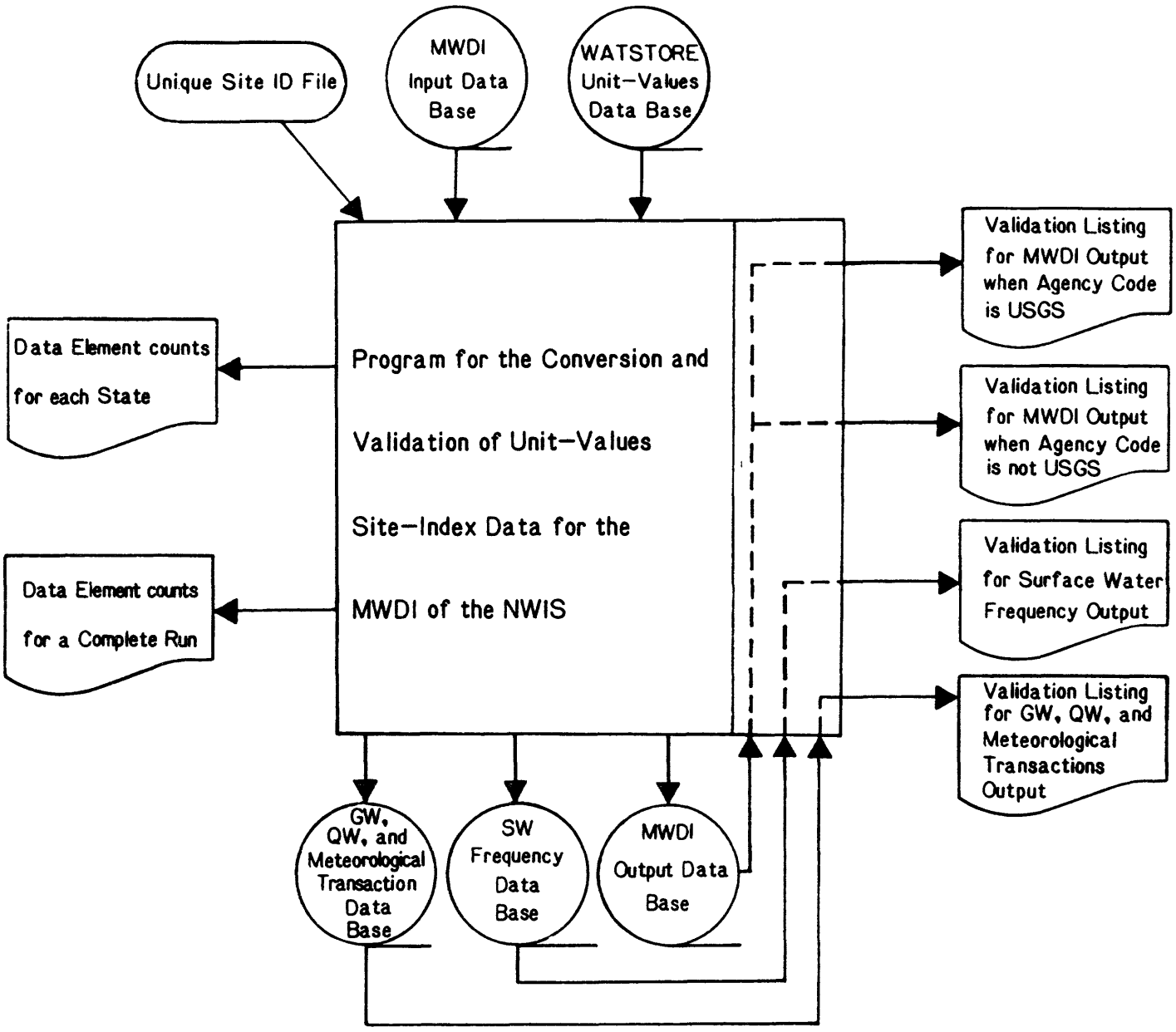

EXPLANATION

MWDI, Master Water Data Index
WATSTORE, National Water Data Storage and Retrieval System
NWIS, National Water Information System
GW, ground water
QW, quality of water
SW, surface water
USGS, U.S. Geological Survey

Figure 1.--Data flowing in and out of program IXCVUV.DB.

In program IXCVUV.DB, the MWDI is updated to include information available through the second data base, which is the unit-values data generated from WATSTORE using WATSTORE program H572.

The unit-values data base is generated for use only with this program. It is an input-only file. No data are written back into it. Its purpose is to provide unit-values information about sites stored in the WATSTORE system, so the program can process these data and update the appropriate fields in the MWDI data base, and then pass the MWDI data base on to the next program.

The last data base maintained by program IXCVUV.DB is the next available unique site identifier file. It is a small data base that contains the next site number to be used in the MWDI data base for any state in the United States. This data base is used whenever site information is stored in the WATSTORE data base and is not stored in the MWDI data base. The next available unique site identifier file is updated in this program each time it is accessed, and the information is passed on to the next program in its updated format.

SECTION 3. PROCEDURES AND REQUIREMENTS

3.1 Execution

To execute program IXCVUV.DB the following steps are required:

a. The program (IXCVHD.DB) preceding this one, which converts and validates site-descriptor data, must be run to generate the MWDI input data set.

b. Program H572 from WATSTORE must be run to retrieve unit-values data for the same states selected in the MWDI input data set that was generated in the previous step.

c. The unit-values data set generated in the previous step must be resorted in the following ascending order: state code, agency code, agency station number, year, parameter code, month, and day.

d. The job control language (JCL) file to execute program IXCVUV.DB is submitted.

Step a is documented in the user's guide for that program (J.W. Green, U.S. Geological Survey, written commun., 1987). Refer to this documentation for instructions to complete this step. Steps b, c, and d are unique to this program, therefore, they will be explained in more detail.

The WATSTORE program H572 is the unit-values retrieval program. The parameters that are used to retrieve by state can be used to generate data for use in this program. A detailed explanation of the retrieval program is listed in the WATSTORE User's Guide (1978), and figure 2 is an example of the JCL used to retrieve WATSTORE data.

```
//xxxxxxxx JOB (nnnnnnnnn,NWIS,,10),'UNRETR',CLASS=E
/*SETUP    118400/H
/*SETUP    118680/H
//PROCLIB DD DSN=WRD.PROCLIB,DISP=SHR
// EXEC UNRETR,AGENCY=USGS,VOL1=118400,VOL4=118680,
//   NAME4='NWIS.IXCVUV.UNIT.VALUES',UNIT4=TAPE62
//HDR.SYSIN DD *
M3
L39
VGENERATE
M3
L42
VGENERATE
/*
//
```

Figure 2.--Job control language (JCL) used to retrieve WATSTORE data.

There is no /*LOGON or /*PASSWORD card image in the JCL because the jobs were run using WYLBUR, which provides this information to the system. If the job is run as a remote job, these card images need to be added after the JOB card image.

A normal retrieval from WATSTORE using program H572 will sort the data in ascending order as follows: state code, agency code, agency station number, parameter code, and date. (There are other items that can be used to sort the data, but there is no need to discuss them here.) Items that program H572 uses to sort data can be put in any order, but the program treats the date (year, month, and day) as a single item. However, the year must be sorted separately from the month and day to put the WATSTORE data in the correct order. Therefore, another method must be used to sort the WATSTORE data properly. Figure 3 is an example of the sort JCL that will accomplish this task, and figure 4 is an example of the JCL used to execute program IXCVUV.DB.

3.2 Input

The input to program IXCVUV.DB consists of the three data bases discussed in section 2.5. The MWDI and the WATSTORE data sets are stored on magnetic tape, and the next available unique site identifier data set is stored on magnetic disk. The formats for all the input data sets are shown in appendix C. The next available unique site identifier data set also is included here, even though it is both input and output.

```
//xxxxxxxx JOB (nnnnnnnn,SORT,10,10),'SORT',CLASS=B
/*ROUTE  PRINT RMT240
/*SETUP    118680/H
/*SETUP    110736/HR,111026/HR,111073/HR
/*SETUP    110651/HR
//NWDXSORT  EXEC  PGM=SORT,REGION=1000K,TIME=30
//STEPLIB     DD  DSN=SYS1.SYNC.LINKLIB,DISP=SHR
//SYSOUT DD SYSOUT=A
//SORTLIB     DD  DSN=SYS1.SYNC.SORTLIB,DISP=SHR
//SORTWK01    DD  UNIT=TAPE62,DISP=NEW,DCB=DEN=4,VOL=SER=110736
//SORTWK02    DD  UNIT=TAPE62,DISP=NEW,DCB=DEN=4,VOL=SER=111026
//SORTWK03    DD  UNIT=TAPE62,DISP=NEW,DCB=DEN=4,VOL=SER=111073
//SORTIN DD DISP=(OLD,KEEP),DSN=NWIS.IVCVUV.UNIT.VALUES,UNIT=TAPE62,
//    DCB=(RECFM=VB,LRECL=11604,BLKSIZE=18760),VOL=SER=118680
//SORTOUT DD DSN=NWIS.IXCVUV.UNIT.VALUES,UNIT=TAPE62,DISP=(,KEEP),
//    DCB=(RECFM=VB,LRECL=11604,BLKSIZE=18760),VOL=SER=110651
//SYSIN DD *
 SORT FIELDS=(3,17,CH,A,37,6,BI,A,33,4,BI,A,43,2,BI,A),SIZE=E10000
/*
//
```

Figure 3.--Job control language (JCL) used to sort WATSTORE data retrieved using program H572.

```
//xxxxxxxx JOB (nnnnnnnn,NWIS,5,30),'name',CLASS=C
/*SETUP    224415/H
/*SETUP    110651/H
/*SETUP    222383/HR
/*SETUP    222384/HR
/*SETUP    222385/HR
//STEP1  EXEC PGM=IXCVUV,REGION=950K,TIME=(5,0)
//STEPLIB  DD DSN=AG40WAH.BINARY,DISP=SHR
//         DD DSN=SYS1.PLIX.TRANSLIB,DISP=SHR
//SYSPRINT DD SYSOUT=A
//OLDMWDI  DD DSN=NWIS.IXCVUV.MWDI.INPUT,DISP=(OLD,KEEP),
//         UNIT=TAPE62,VOL=SER=224415,
//         DCB=(RECFM=FB,LRECL=1394,BLKSIZE=18122),LABEL=(1,SL)
//WATSTOR  DD DSN=NWIS.IXCVUV.UNIT.VALUES,DISP=(OLD,KEEP),
//         UNIT=TAPE62,VOL=SER=110651
//NXTAVAL  DD DSN=NWIS.IXCVHD.UIDHV,DCB=DSORG=IS,DISP=SHR,
//         UNIT=3350,VOL=SER=WRD513
//NEWMWDI  DD DSN=NWIS.IXCVUV.MWDI.OUTPUT,DISP=(OLD,KEEP),
//         UNIT=TAPE62,VOL=SER=222383,
//         DCB=(RECFM=FB,LRECL=1370,BLKSIZE=19180),
//         LABEL=(1,SL,RETPD=365)
//SWFRQHT  DD DSN=NWIS.IXCVUV.FREQ.HIST,DISP=(OLD,KEEP),
//         UNIT=TAPE62,VOL=SER=222384,
//         DCB=(RECFM=FB,LRECL=44,BLKSIZE=880),LABEL=(1,SL,RETPD=365)
//OTRTRNS  DD DSN=NWIS.IXCVUV.TRANS.DATA,DISP=(OLD,KEEP),
//         UNIT=TAPE62,VOL=SER=222385,
//         DCB=(RECFM=FB,LRECL=40,BLKSIZE=800),LABEL=(1,SL,RETPD=365)
/*
//
```

Figure 4.--Job control language (JCL) used to execute program IXCVUV.DB.

3.3 Output

The output of program IXCVUV.DB consists of the updated MWDI data set, the surface-water frequency data set, and the ground-water, quality-of-water, and meteorological transaction data set. The data sets are stored on magnetic tape, and the next available unique site identifier data set is stored on magnetic disk. The listings generated by the program contain surface-water data element counts for input and output, and statistics of the program run. The listings also include samples of validated surface-water data (first 100 records where the agency is not the USGS, and the first 200 records where the agency is the USGS), and ground-water, quality-of-water, and meteorological data (first 200 records).

3.3.1 Output Formats

The formats of the MWDI data set, the surface-water frequency data set, and the ground-water, quality-of-water, and meteorological data set are listed in appendix D. The format of the next available unique site identifier data set is listed in appendix C.

3.3.2 Sample Outputs

There are actually six listings generated by program IXCVUV.DB, two of which are almost identical. Examples of each of the listings are in appendix E. There are data element counts for a single state (example 1), data element counts for a complete run (example 2), a validation listing for MWDI output (example 3), a validation listing for surface water frequency output (example 4), and a validation listing for ground-water, quality-of-water, and meteorological transactions output (example 5). The validation listing for MWDI output is further divided into two groups: those with an agency code of USGS, and those with an agency code other than USGS. Example 3 in appendix E can be used as an example for both of these outputs because the only difference is in the agency code field.

3.4 Error and Recovery

If an error is encountered during the execution of this program, the NWIS Project Office of the Branch of Computer Technology should be notified for remedial action or assistance. There is no action that the user can take on his own.

SECTION 4. SELECTED REFERENCES

Bower, D.E., and Dempster, G.R., Jr., 1978, Chapter III. Instructions for unit values file, Section B. Retrieval of data from unit values file (program H572), in WATSTORE User's Guide: U.S. Geological Survey Open-File Report 77-729, v. 5, chap. III, sec. B, 140 p.

U.S. Department of Commerce, 1976, Guidelines for documentation of computer programs and automated data systems: U.S. Department of Commerce, National Bureau of Standards, FIPS PUB 38, 55 p.

APPENDIX A. PSEUDO CODE

```
Declare variables and structures
Initialize variables and common blocks
Open files
Read MWDI input record
Read WATSTORE unit-values record
Perform INPUT_SCREENING
Perform WATSTORE_SCREEN
WHILE (MWDI input file not empty and WATSTORE unit-values file not empty)
  IF (state code has changed)
    THEN Perform PRINT_CONTROL_SUBS
  END IF
  Clear MWDI output record
  CASE (MWDI state code < WATSTORE state code or (MWDI state code =
        WATSTORE state code & MWDI agency code < WATSTORE agency code) or
       (MWDI state code = WATSTORE state code & MWDI agency code =
        WATSTORE agency code & MWDI station no < WATSTORE station no) or
        WATSTORE file empty)
    Perform INPUT_COUNTS
    Perform MOVE_ELEMENTS_TO_BE_KEPT
    Perform SW_RELATED_ELEMENTS
    Perform CONVERT_UV_ELEMENTS
    Perform ASSIGN_SW_DB_IDENTIFIERS
    Perform OUTPUT_COUNTS
    Write MWDI output record
    Read MWDI input record
    Call INPUT_SCREENING
  CASE (MWDI state code = WATSTORE state code &
        MWDI agency code = WATSTORE agency code &
        MWDI station number = WATSTORE station number)
    Perform INPUT_COUNTS
    Perform MOVE_ELEMENTS_TO_BE_KEPT
    Perform SW_RELATED_ELEMENTS
    Perform CONVERT_UV_ELEMENTS
    WHILE (MWDI station no = WATSTORE station no & WATSTORE not empty)
      If (WATSTORE record is surface water)
      THEN DO 1
        IF (previous record processed is not surface water)
          THEN DO 2
            Set flag to write record into nonsurface-water transaction file
            Perform OTHER_DATA_TRANSACTIONS
            Reset flag
          END THEN 2
        Set flag indicating that this is a surface-water record
        Perform SW_FREQUENCY_COMPS
        Perform SW_ANN_FREQ_COMPS
        Perform SW_PERIOD_OF_RECORD
        Perform OTHER_SW_ACTIONS
        IF (flag indicating that this is a new surface-water record is set)
          THEN Perform SW_ANN_FREQ_COMPS
        Read WATSTORE unit-values record
        Perform WATSTORE_SCREEN
        IF (last record's station number = new record's station number &
            WATSTORE file is not empty)
```

```
      THEN DO 3
        IF (new record's year number is not equal to last record's
            year number)
          THEN Perform SW_ANN_FREQ_COMPS
      END THEN 3
      ELSE DO 1
        Set flag to write out surface-water transaction record
        Perform SW_ANN_FREQ_COMPS
        Perform SW_PERIOD_OF_RECORD
        Reset flags for writing out data and to denote that it is a
        surface-water station
      END ELSE 1
  END THEN 1
  ELSE DO 2
    IF (WATSTORE record is not surface-water data)
      THEN DO 4
        IF (last WATSTORE record was surface-water data)
          THEN DO 5
            Set flag to write out surface-water transaction record
            Perform SW_ANN_FREQ_COMPS
            Reset flags for writing out data and to denote that it is
            a surface-water station
          END THEN 5
        Perform OTHER_DATA_TRANSACTIONS
        Read new WATSTORE unit-values record
        Perform WATSTORE_SCREEN
        IF (last record's station number = new record's station
            number and WATSTORE file not empty)
          THEN DO 6
            IF (new record's year number not equal to last record's
                year number)
              THEN Perform OTHER_DATA_TRANSACTIONS
          END THEN 6
          ELSE DO 3
            Set flag to print nonsurface-water transaction record
            Perform OTHER_DATA_TRANSACTIONS
            Reset flag
          END ELSE 3
      END THEN 4
    ELSE DO 4
      IF (WATSTORE record parameter code = 74207)
        THEN DO 7
          Perform OTHER_DATA_AVAILABLE
          Read WATSTORE unit-values record
          Perform WATSTORE_SCREEN
        END THEN 7
        ELSE DO 5
          Read WATSTORE unit-values record
          Perform WATSTORE_SCREEN
        END ELSE 5
    END ELSE 4
  END ELSE 2
END WHILE
Perform ASSIGN_SW_DB_IDENTIFIERS
```

```
  Reset flag indicating current record is surface-water data
  Perform OUTPUT_COUNTS
  Write MWDI output record
  Read MWDI input record
  Perform INPUT_SCREENING
CASE (MWDI state code > WATSTORE state code or (MWDI state code =
      WATSTORE state code & MWDI agency code > WATSTORE agency code) or
     (MWDI state code = WATSTORE state code & MWDI agency code =
      WATSTORE agency code & MWDI station no > WATSTORE station no) or
      MWDI file empty)
  Perform INDEX_NEW_SITE
  WHILE (MWDI station no = WATSTORE station no & WATSTORE not empty)
    If (WATSTORE record is surface water)
    THEN DO 8
      IF (previous record processed is not surface water)
        THEN DO 9
          Set flag to write record into nonsurface-water transaction file
          Perform OTHER_DATA_TRANSACTIONS
          Reset flag
        END THEN 9
      Set flag indicating that this is a surface-water record
      Perform SW_FREQUENCY_COMPS
      Perform SW_ANN_FREQ_COMPS
      Perform SW_PERIOD_OF_RECORD
      Perform OTHER_SW_ACTIONS
      IF (flag indicating that this is a new surface-water record is set)
        THEN Perform SW_ANN_FREQ_COMPS
      Read WATSTORE unit-values record
      Perform WATSTORE_SCREEN
      IF (last record's station number = new record's station number &
          WATSTORE file is not empty)
        THEN DO 10
          IF (new record's year number is not equal to last record's
              year number)
            THEN Perform SW_ANN_FREQ_COMPS
        END THEN 10
        ELSE DO 6
          Set flag to write out surface-water transaction record
          Perform SW_ANN_FREQ_COMPS
          Perform SW_PERIOD_OF_RECORD
          Reset flags for writing out data and to denote that it is a
          surface-water station
        END ELSE 6
    END THEN 8
    ELSE DO 7
      IF (WATSTORE record is not surface-water data)
        THEN DO 11
          IF (last WATSTORE record was surface-water data)
            THEN DO 12
              Set flag to write out surface-water transaction record
              Perform SW_ANN_FREQ_COMPS
              Reset flags for writing out data and to denote that it is
              a surface-water station
            END THEN 12
```

```
            Perform OTHER_DATA_TRANSACTIONS
            Read new WATSTORE unit-values record
            Perform WATSTORE_SCREEN
            IF (last record's station number = new record's station
                number and WATSTORE file not empty)
              THEN DO 13
                IF (new record's year number not equal to last record's
                    year number)
                  THEN Perform OTHER_DATA_TRANSACTIONS
              END THEN 13
              ELSE DO 8
                Set flag to print nonsurface-water transaction record
                Perform OTHER_DATA_TRANSACTIONS
                Reset flag
              END ELSE 8
          END THEN 11
        ELSE DO 9
          IF (WATSTORE record parameter code = 74207)
            THEN DO 14
              Perform OTHER_DATA_AVAILABLE
              Read WATSTORE unit-values record
              Perform WATSTORE_SCREEN
            END THEN 14
            ELSE DO 10
              Read WATSTORE unit-values record
              Perform WATSTORE_SCREEN
            END ELSE 10
        END ELSE 9
      END ELSE 7
    END WHILE
    Perform ASSIGN_SW_DB_IDENTIFIERS
    Reset flag indicating current record is surface-water data
    Perform OUTPUT_COUNTS
    Write MWDI output record
  OTHERWISE
    Print error message
    Stop program
  END CASE
END WHILE
Perform PRINT_CONTROL_SUBS
Perform PRINT_CONTROL_TOTALS
Perform PRINT_VALIDATED_SW_DATA
Close files
Stop program
```

APPENDIX B. VISUAL TABLE OF CONTENTS ORGANIZATIONAL CHART

VTOC NO. 1.0,2.0	Convert and Validate Unit-Values Data for the MWDI	Page 1 of 14

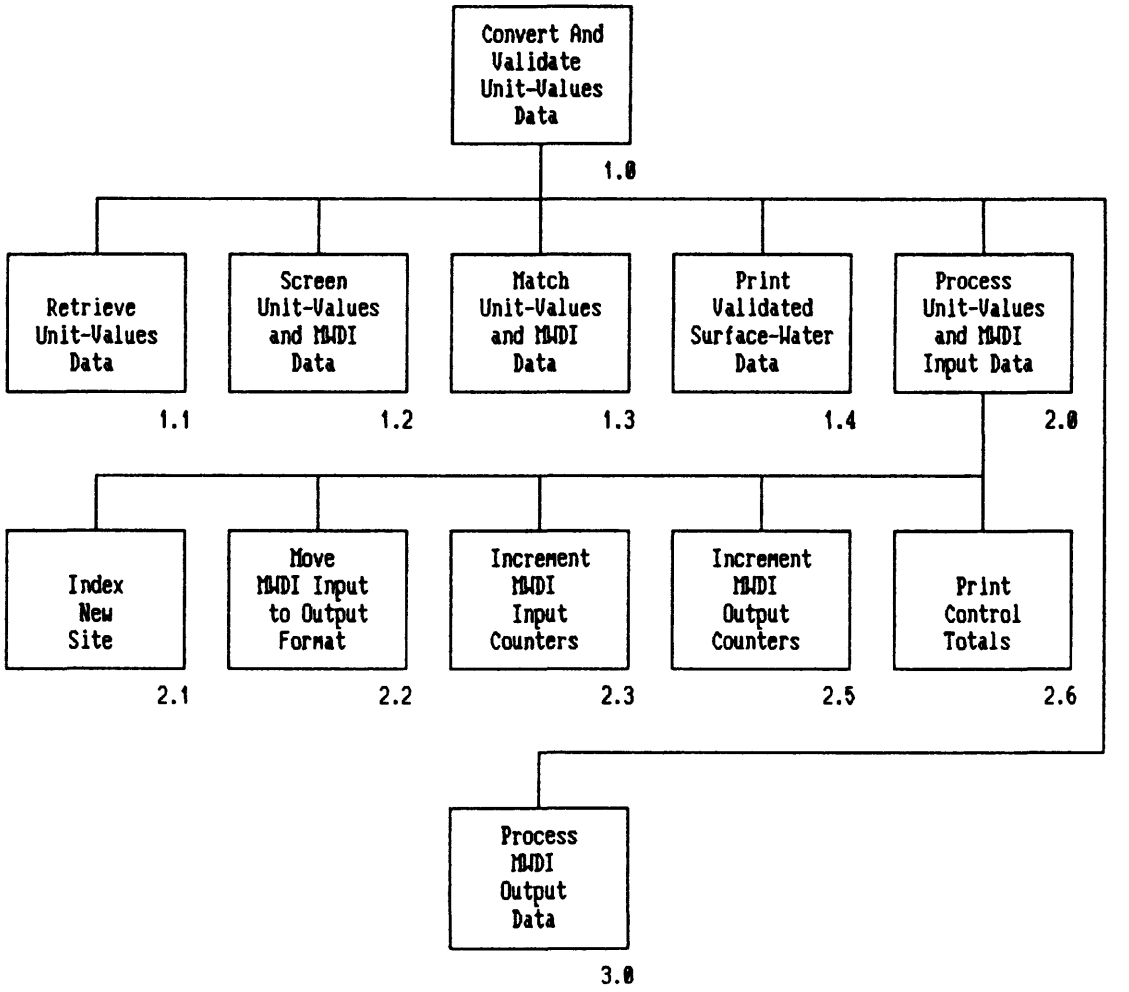

Developed:
Date: 06/01/1987

By: S. H. Beddingfield

VTOC NO. 3.0	Convert and Validate Unit-Values Data for the MWDI	Page 2 of 14

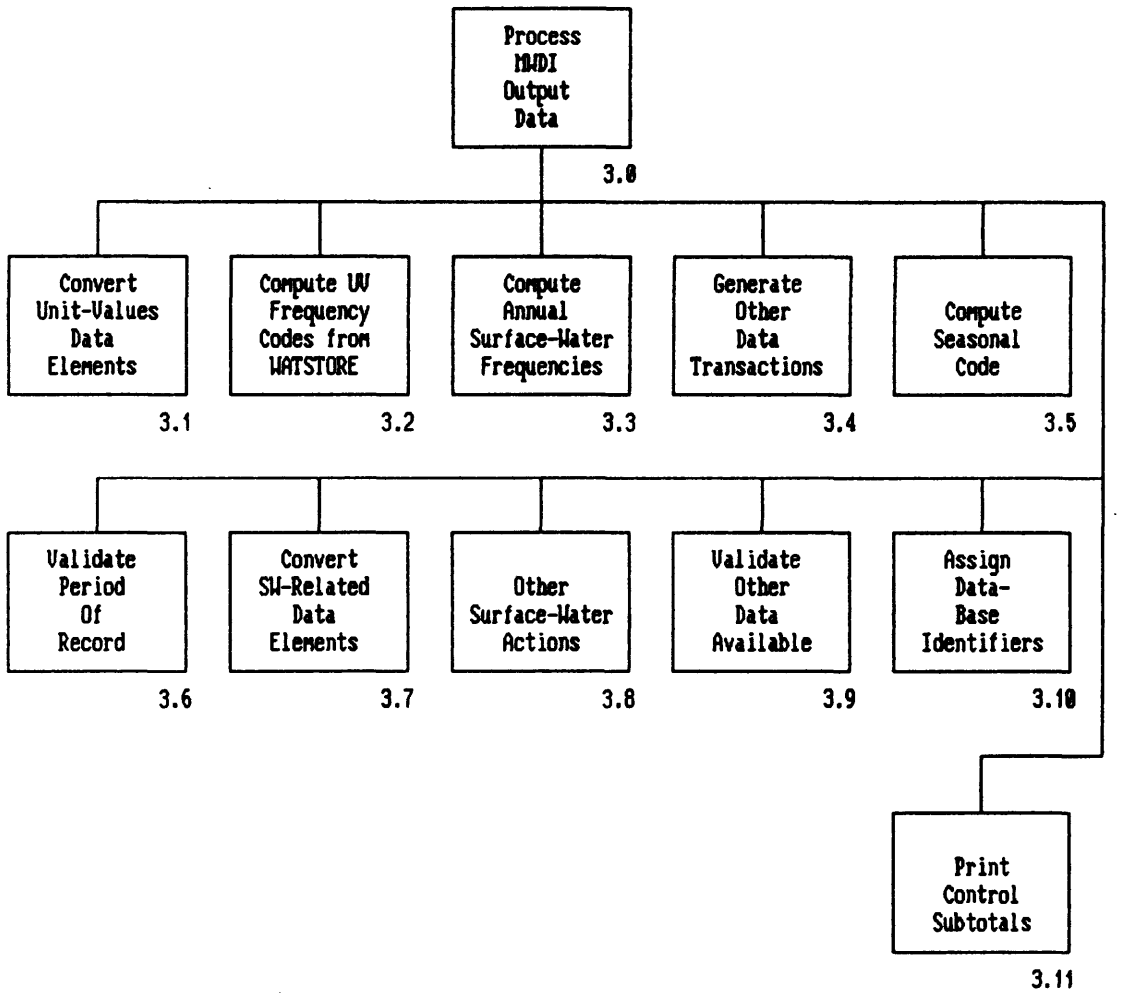

Developed:
Date: 06/01/1987

By: S. H. Beddingfield

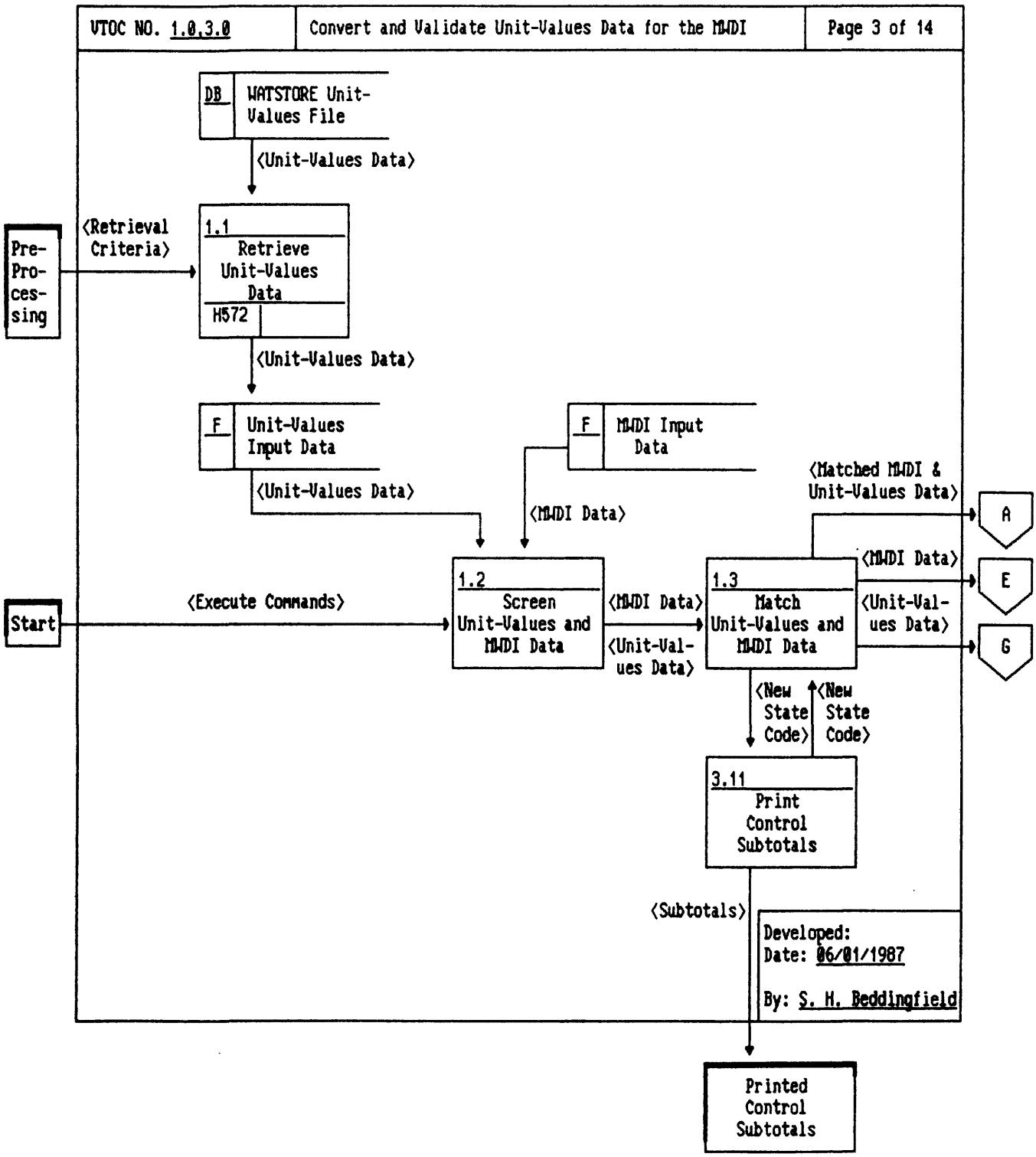
VTOC NO. 1.0.3.0
Convert and Validate Unit-Values Data for the MWDI
Page 3 of 14
DB
WATSTORE Unit-Values File
⟨Unit-Values Data⟩
Pre-Pro-ces-sing
⟨Retrieval Criteria⟩
1.1
Retrieve Unit-Values Data
H572
⟨Unit-Values Data⟩
F
Unit-Values Input Data
⟨Unit-Values Data⟩
F
MWDI Input Data
⟨MWDI Data⟩
⟨Matched MWDI & Unit-Values Data⟩
A
Start
⟨Execute Commands⟩
1.2
Screen Unit-Values and MWDI Data
⟨MWDI Data⟩
⟨Unit-Val-ues Data⟩
1.3
Match Unit-Values and MWDI Data
⟨MWDI Data⟩
E
⟨Unit-Val-ues Data⟩
G
⟨New State Code⟩
⟨New State Code⟩
3.11
Print Control Subtotals
⟨Subtotals⟩
Developed:
Date: 06/01/1987
By: S. H. Beddingfield
Printed Control Subtotals

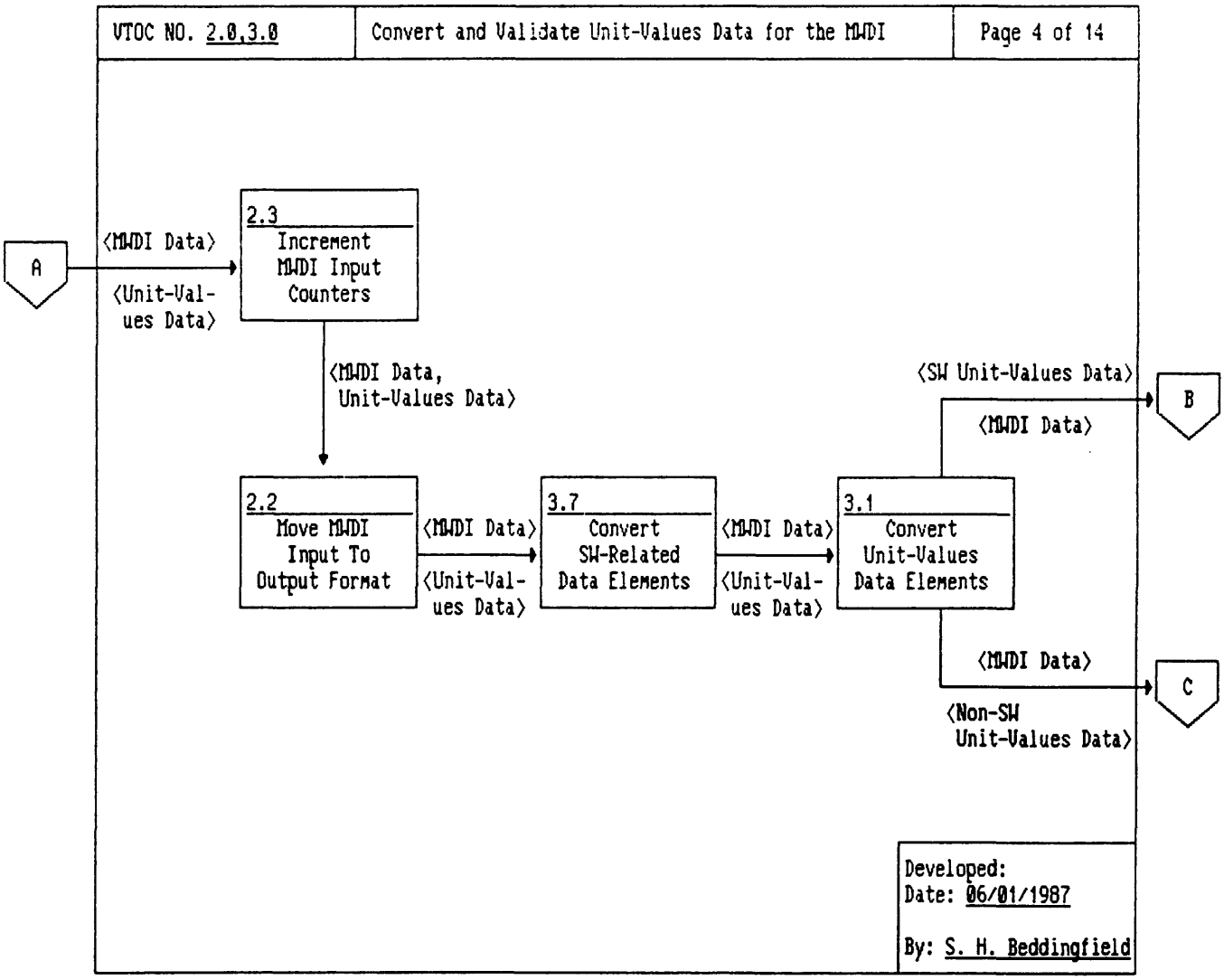
VTOC NO. 2.0,3.0
Convert and Validate Unit-Values Data for the MWDI
Page 4 of 14
A
⟨MWDI Data⟩
⟨Unit-Val-ues Data⟩
2.3
Increment MWDI Input Counters
⟨MWDI Data, Unit-Values Data⟩
2.2
Move MWDI Input To Output Format
⟨MWDI Data⟩
⟨Unit-Val-ues Data⟩
3.7
Convert SW-Related Data Elements
⟨MWDI Data⟩
⟨Unit-Val-ues Data⟩
3.1
Convert Unit-Values Data Elements
⟨SW Unit-Values Data⟩
⟨MWDI Data⟩
B
⟨MWDI Data⟩
⟨Non-SW Unit-Values Data⟩
C
Developed:
Date: 06/01/1987
By: S. H. Beddingfield

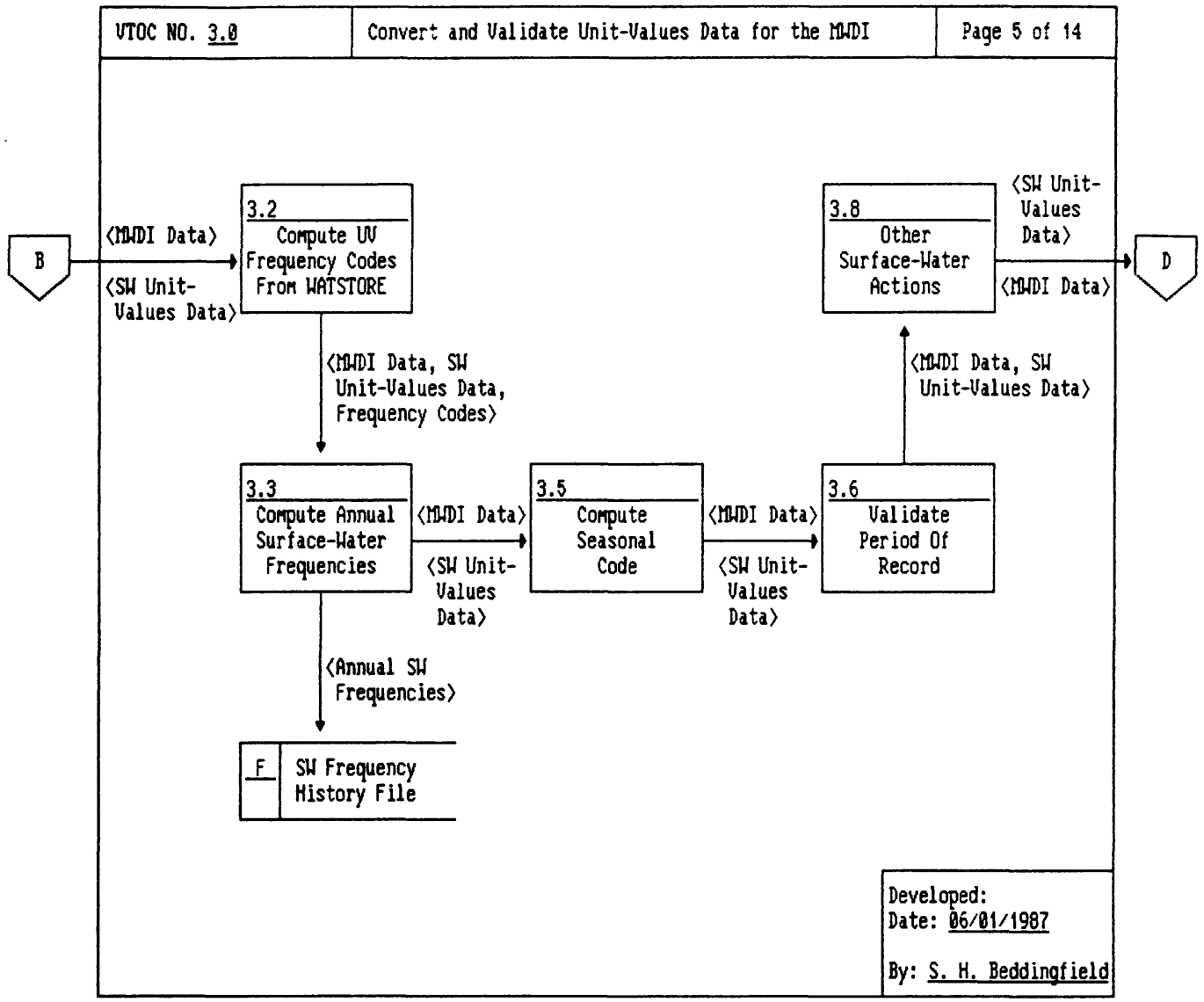
UTOC NO. 3.0
Convert and Validate Unit-Values Data for the MWDI
Page 5 of 14
B
⟨MWDI Data⟩
⟨SW Unit-Values Data⟩
3.2
Compute UV Frequency Codes From WATSTORE
⟨MWDI Data, SW Unit-Values Data, Frequency Codes⟩
3.3
Compute Annual Surface-Water Frequencies
⟨MWDI Data⟩
⟨SW Unit-Values Data⟩
3.5
Compute Seasonal Code
⟨MWDI Data⟩
⟨SW Unit-Values Data⟩
3.6
Validate Period Of Record
⟨MWDI Data, SW Unit-Values Data⟩
3.8
Other Surface-Water Actions
⟨SW Unit-Values Data⟩
⟨MWDI Data⟩
D
⟨Annual SW Frequencies⟩
F
SW Frequency History File
Developed:
Date: 06/01/1987
By: S. H. Beddingfield

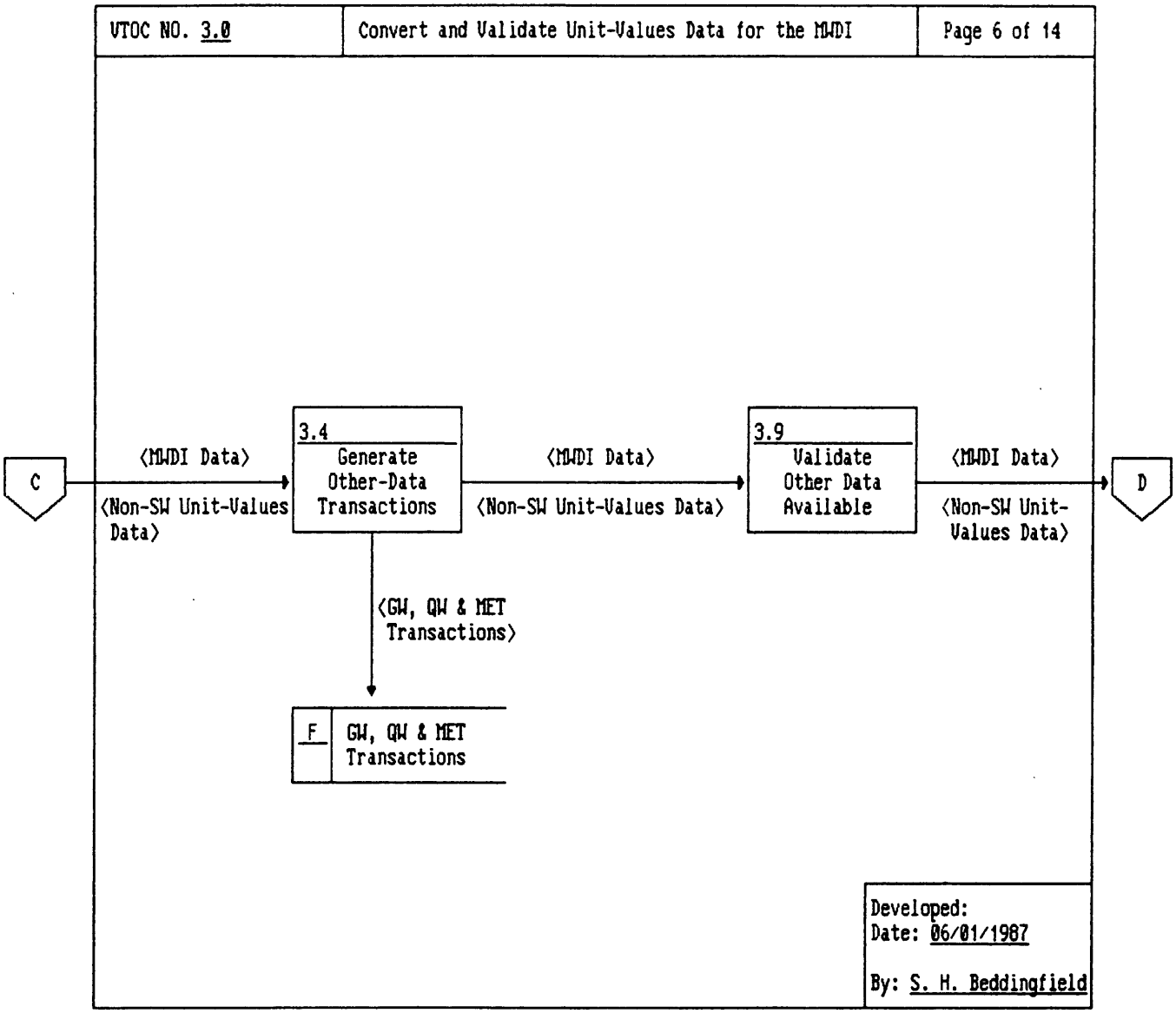
VTOC NO. 3.0
Convert and Validate Unit-Values Data for the MWDI
Page 6 of 14
C
⟨MWDI Data⟩
⟨Non-SW Unit-Values Data⟩
3.4
Generate Other-Data Transactions
⟨MWDI Data⟩
⟨Non-SW Unit-Values Data⟩
3.9
Validate Other Data Available
⟨MWDI Data⟩
⟨Non-SW Unit-Values Data⟩
D
⟨GW, QW & MET Transactions⟩
F
GW, QW & MET Transactions
Developed:
Date: 06/01/1987
By: S. H. Beddingfield

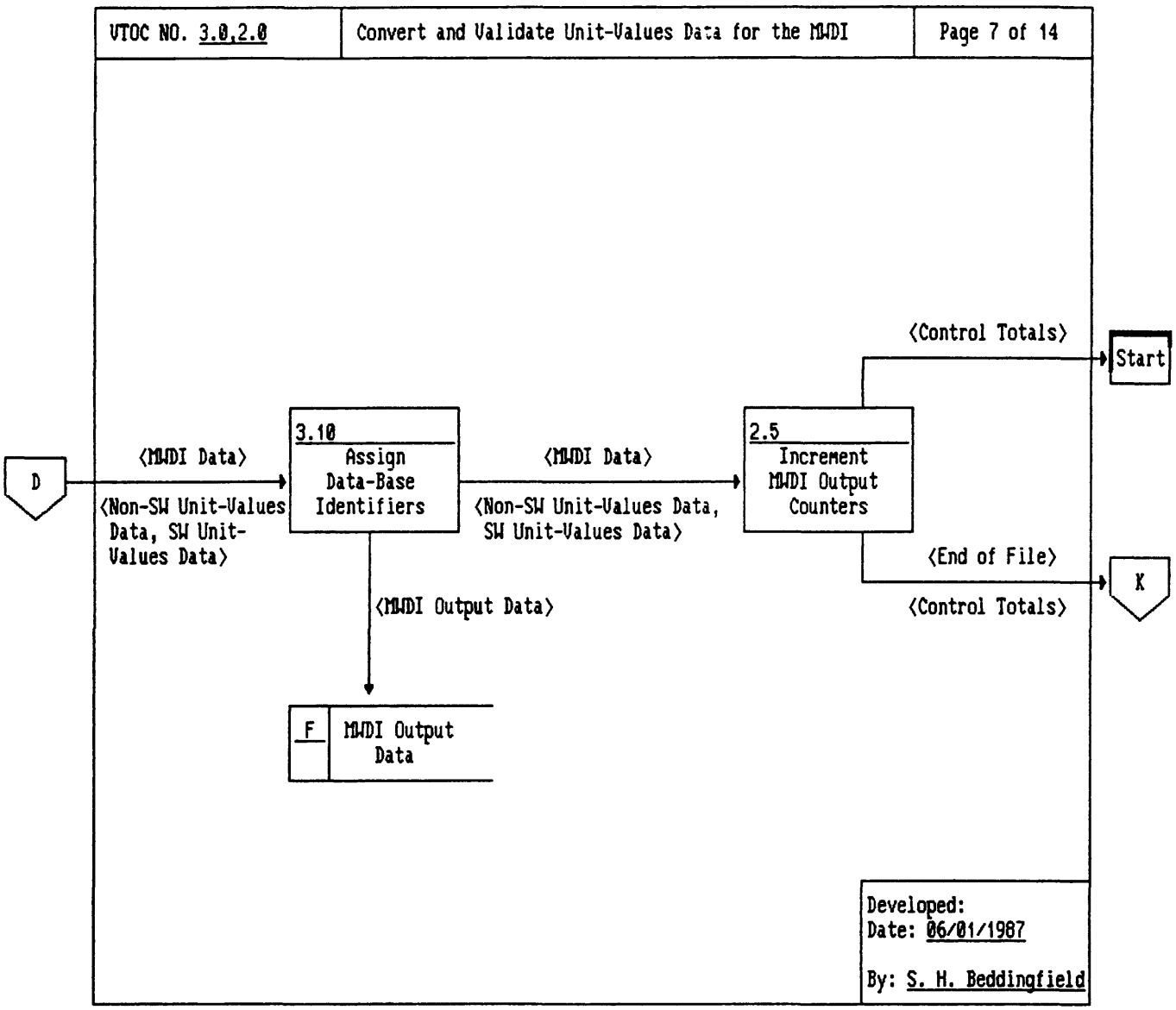
VTOC NO. 3.0,2.0
Convert and Validate Unit-Values Data for the MWDI
Page 7 of 14
⟨Control Totals⟩
Start
D
⟨MWDI Data⟩
⟨Non-SW Unit-Values Data, SW Unit-Values Data⟩
3.10
Assign Data-Base Identifiers
⟨MWDI Data⟩
⟨Non-SW Unit-Values Data, SW Unit-Values Data⟩
2.5
Increment MWDI Output Counters
⟨End of File⟩
⟨Control Totals⟩
K
⟨MWDI Output Data⟩
F
MWDI Output Data
Developed:
Date: 06/01/1987
By: S. H. Beddingfield

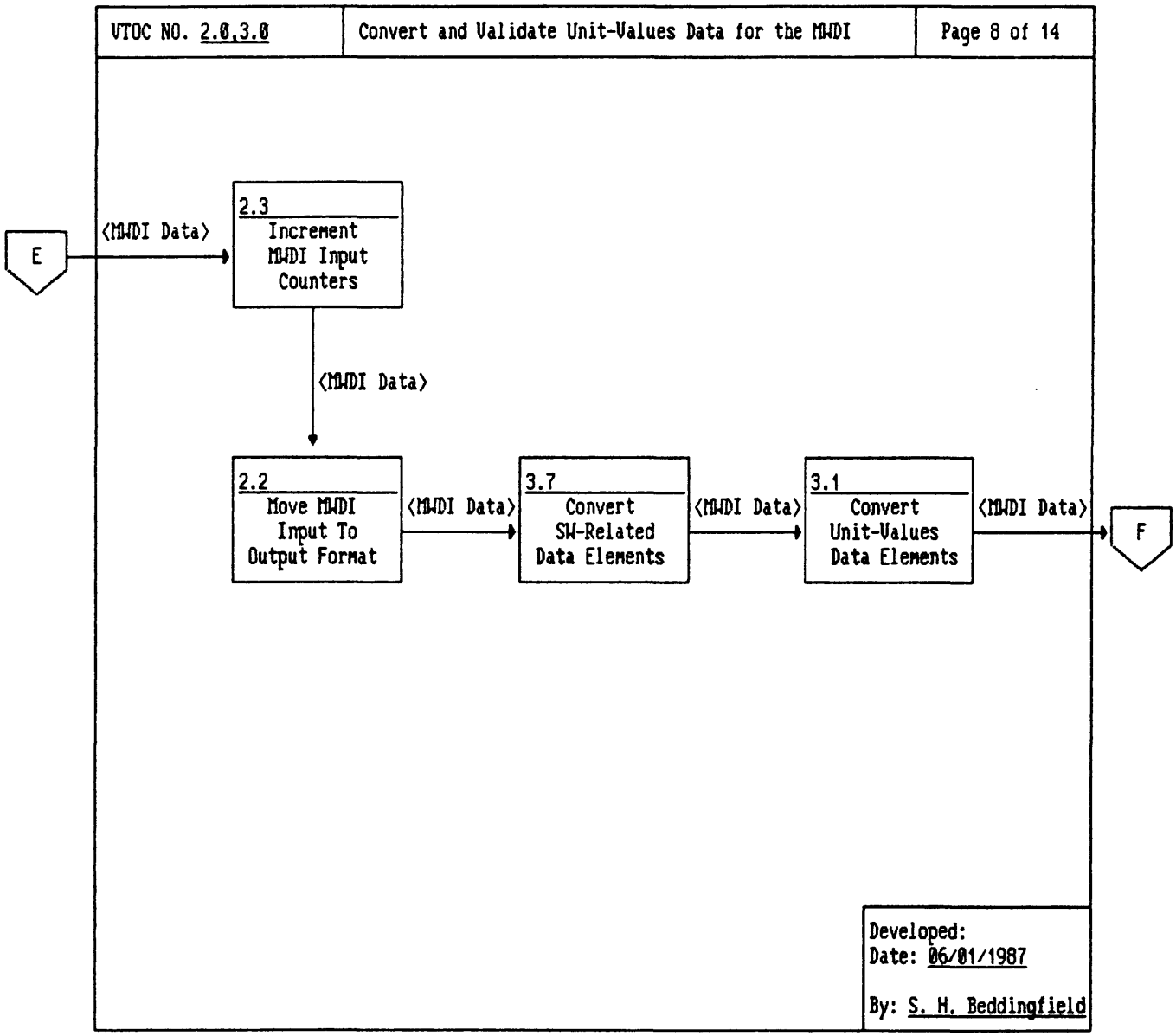
VTOC NO. 2.0,3.0
Convert and Validate Unit-Values Data for the MWDI
Page 8 of 14
E
⟨MWDI Data⟩
2.3
Increment MWDI Input Counters
⟨MWDI Data⟩
2.2
Move MWDI Input To Output Format
⟨MWDI Data⟩
3.7
Convert SW-Related Data Elements
⟨MWDI Data⟩
3.1
Convert Unit-Values Data Elements
⟨MWDI Data⟩
F
Developed:
Date: 06/01/1987
By: S. H. Beddingfield

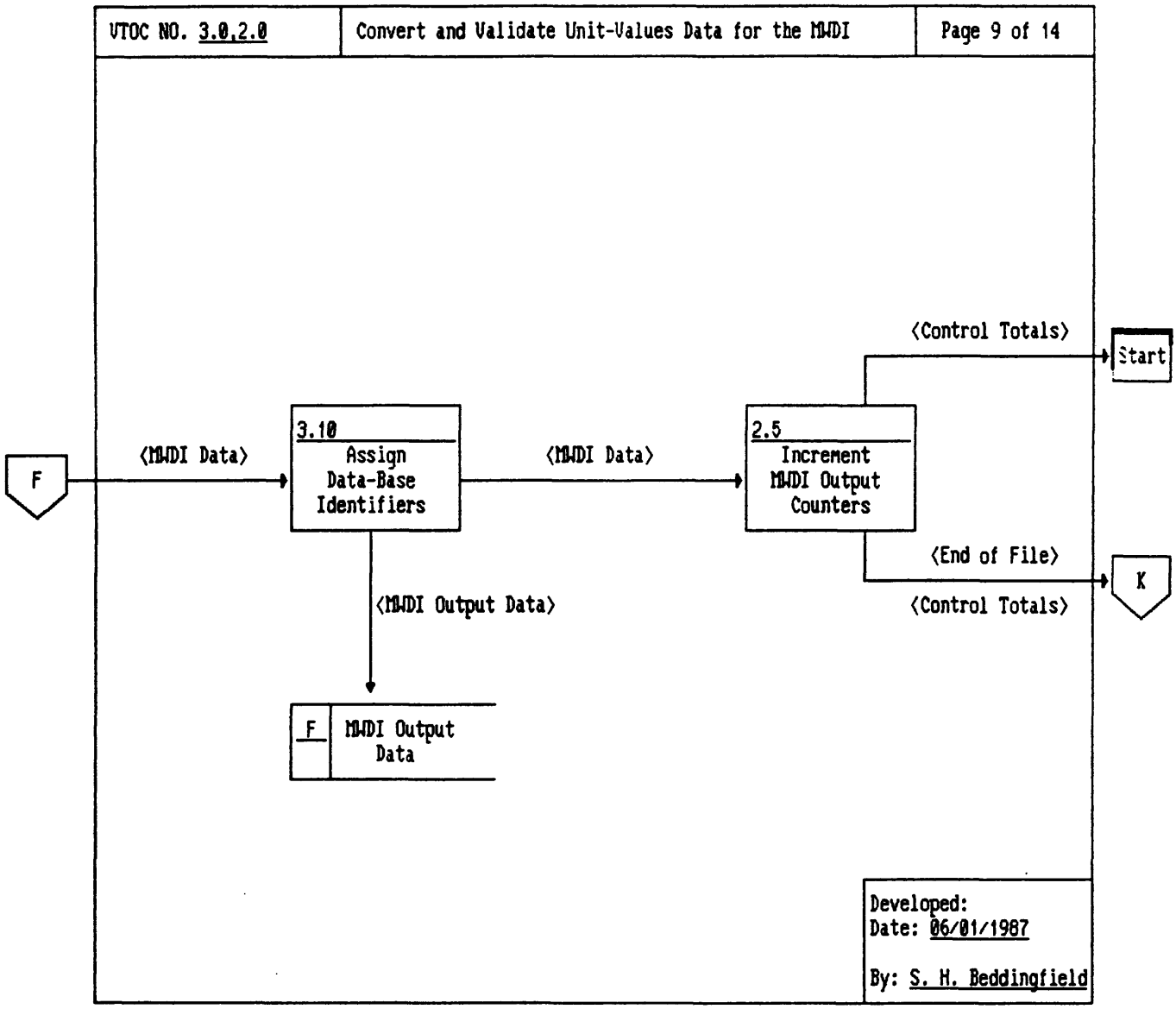
VTOC NO. 3.0,2.0
Convert and Validate Unit-Values Data for the MWDI
Page 9 of 14
F
⟨MWDI Data⟩
3.10
Assign Data-Base Identifiers
⟨MWDI Data⟩
2.5
Increment MWDI Output Counters
⟨Control Totals⟩
Start
⟨End of File⟩
⟨Control Totals⟩
K
⟨MWDI Output Data⟩
F
MWDI Output Data
Developed:
Date: 06/01/1987
By: S. H. Beddingfield

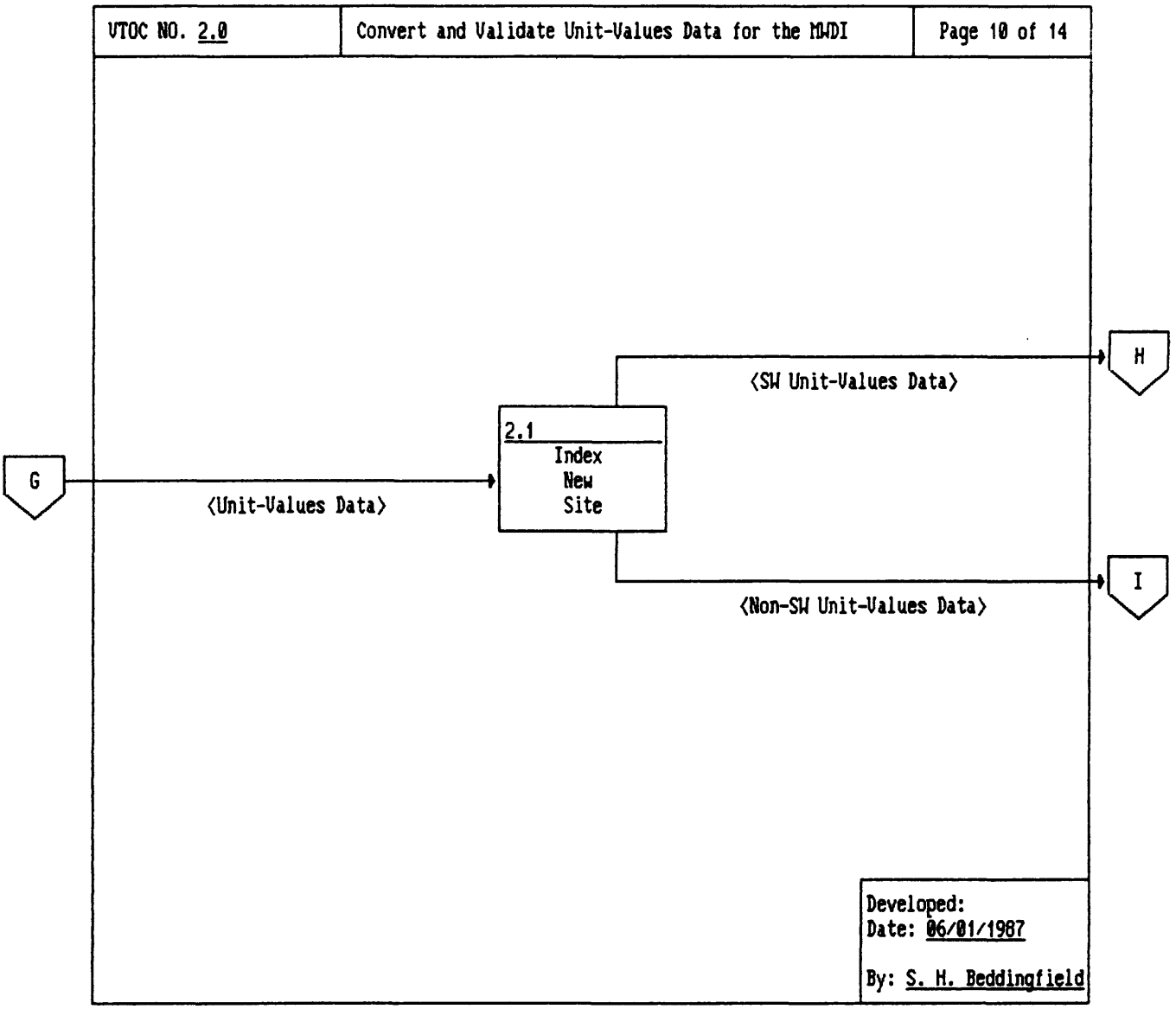
VTOC NO. 2.0
Convert and Validate Unit-Values Data for the MWDI
Page 10 of 14
G
⟨Unit-Values Data⟩
2.1
Index
New
Site
⟨SW Unit-Values Data⟩
H
⟨Non-SW Unit-Values Data⟩
I
Developed:
Date: 06/01/1987
By: S. H. Beddingfield

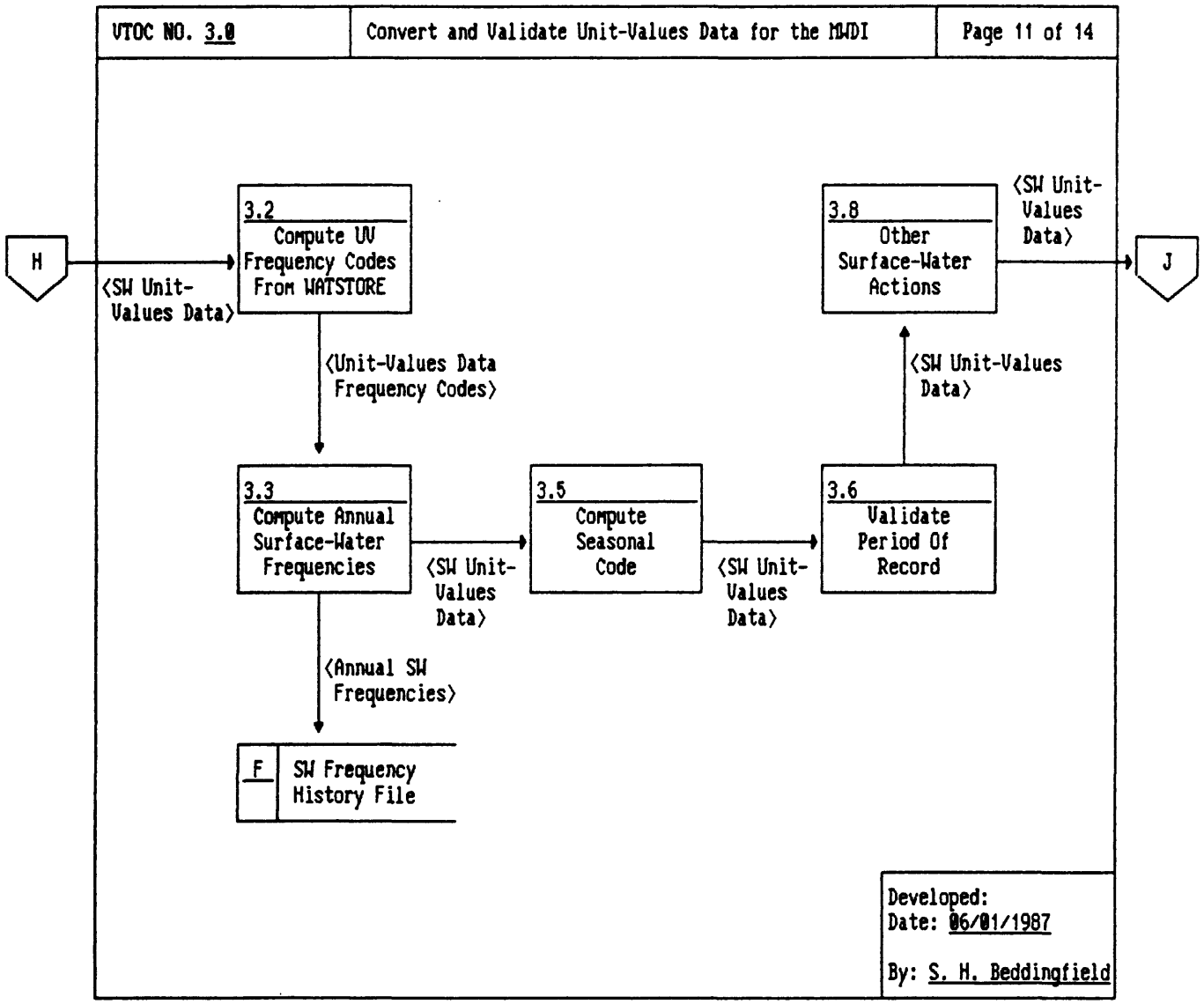
UTOC NO. 3.0
Convert and Validate Unit-Values Data for the MWDI
Page 11 of 14
H
3.2
Compute UV Frequency Codes From WATSTORE
<SW Unit-Values Data>
<Unit-Values Data Frequency Codes>
3.3
Compute Annual Surface-Water Frequencies
<SW Unit-Values Data>
3.5
Compute Seasonal Code
<SW Unit-Values Data>
3.6
Validate Period Of Record
<SW Unit-Values Data>
3.8
Other Surface-Water Actions
<SW Unit-Values Data>
J
<Annual SW Frequencies>
F
SW Frequency History File
Developed:
Date: 06/01/1987
By: S. H. Beddingfield

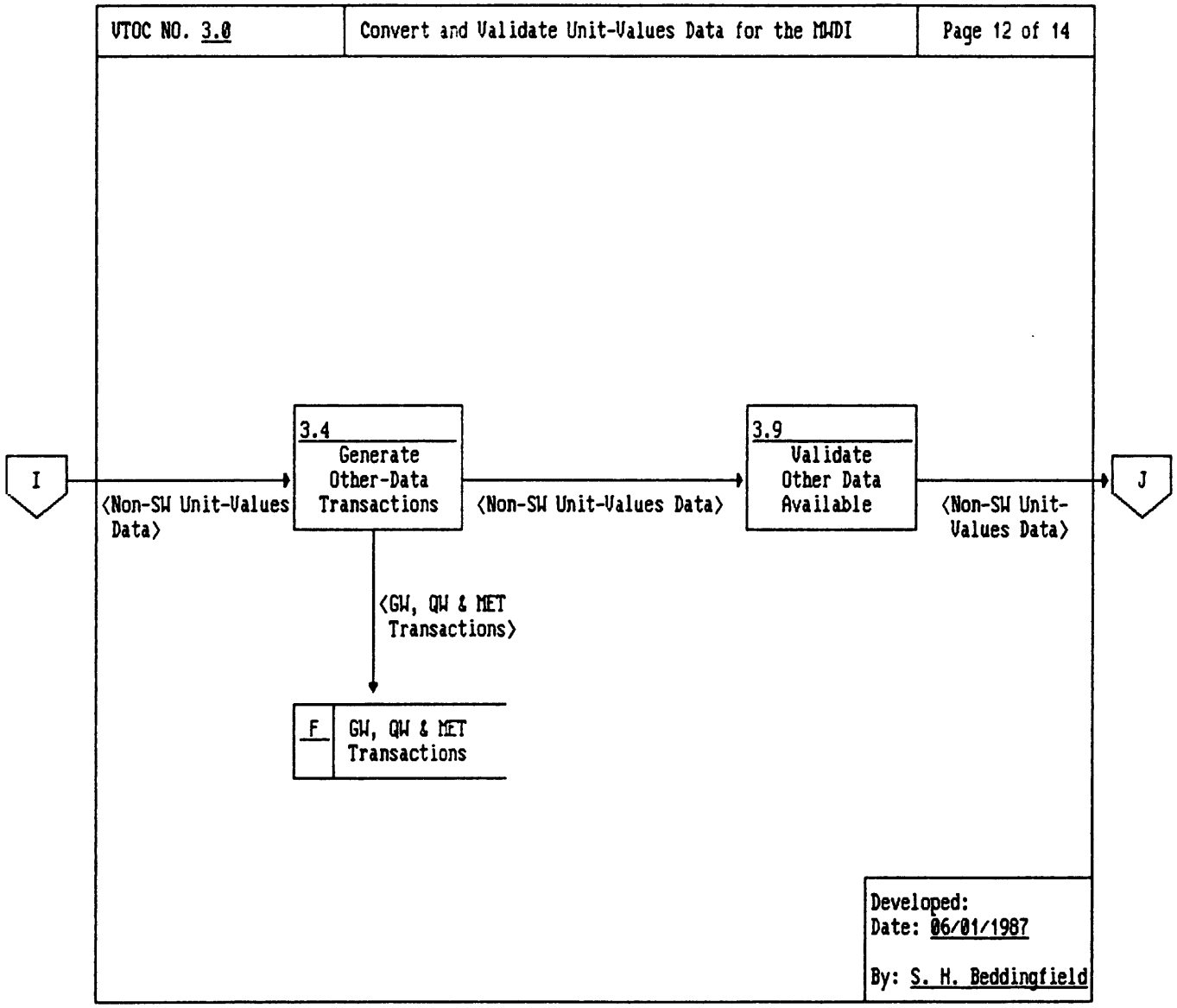
VTOC NO. 3.0
Convert and Validate Unit-Values Data for the MWDI
Page 12 of 14
I
<Non-SW Unit-Values Data>
3.4
Generate Other-Data Transactions
<Non-SW Unit-Values Data>
3.9
Validate Other Data Available
<Non-SW Unit-Values Data>
J
<GW, QW & MET Transactions>
F
GW, QW & MET Transactions
Developed:
Date: 06/01/1987
By: S. H. Beddingfield

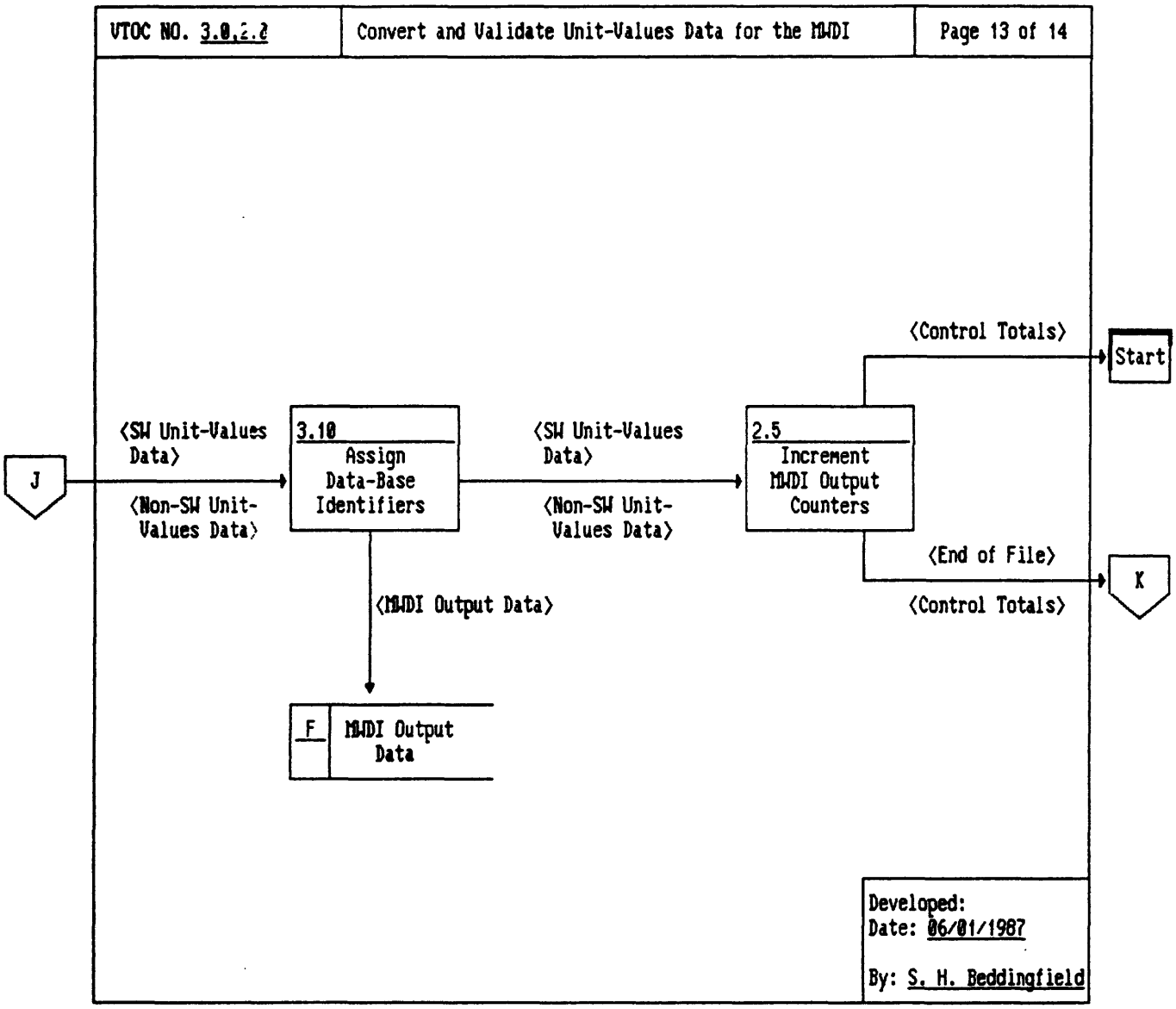
VTOC NO. 3.0,2.2
Convert and Validate Unit-Values Data for the MWDI
Page 13 of 14
J
⟨SW Unit-Values Data⟩
⟨Non-SW Unit-Values Data⟩
3.10
Assign Data-Base Identifiers
⟨SW Unit-Values Data⟩
⟨Non-SW Unit-Values Data⟩
2.5
Increment MWDI Output Counters
⟨Control Totals⟩
Start
⟨End of File⟩
⟨Control Totals⟩
X
⟨MWDI Output Data⟩
F
MWDI Output Data
Developed:
Date: 06/01/1987
By: S. H. Beddingfield

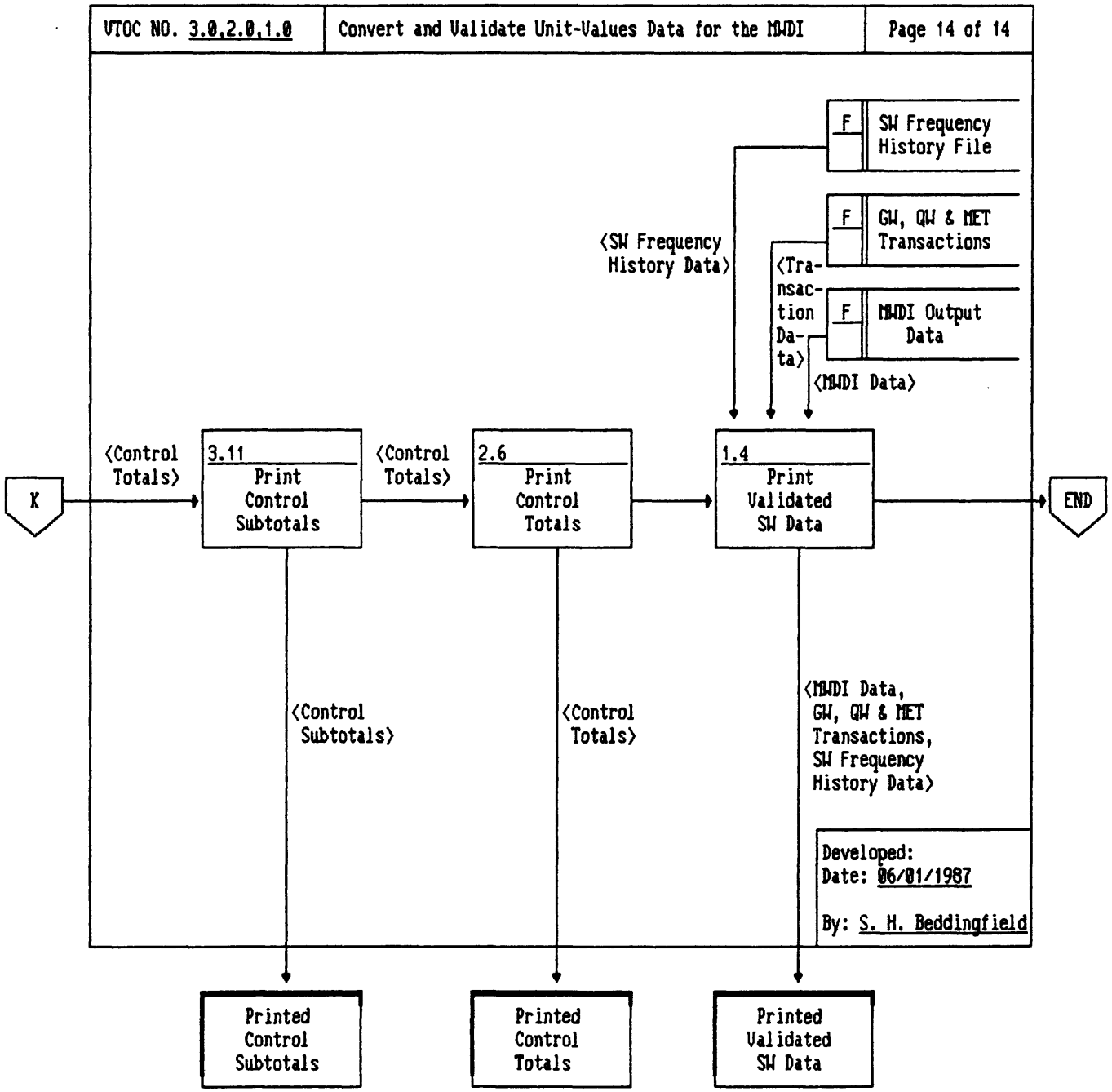
UTOC NO. 3.0.2.0.1.0
Convert and Validate Unit-Values Data for the MWDI
Page 14 of 14
F
SW Frequency History File
F
GW, QW & MET Transactions
F
MWDI Output Data
〈SW Frequency History Data〉
〈Transaction Data〉
〈MWDI Data〉
K
〈Control Totals〉
3.11
Print Control Subtotals
〈Control Totals〉
2.6
Print Control Totals
1.4
Print Validated SW Data
END
〈Control Subtotals〉
〈Control Totals〉
〈MWDI Data, GW, QW & MET Transactions, SW Frequency History Data〉
Developed:
Date: 06/01/1987
By: S. H. Beddingfield
Printed Control Subtotals
Printed Control Totals
Printed Validated SW Data

APPENDIX C. INPUT FILE FORMATS

Table C-1.--Format of Master Water Data Index (MWDI) input data records

Data Element Name	Data Format[1]	Byte Positions
Site Descriptor Data	---	---
Unique Site Identifier	Fixed Binary (31)	1 - 4
Agency Code	CHAR (5)	5 - 9
Agency Station Number	CHAR (15)	10 - 24
Local Well Number	CHAR (24)	25 - 48
Station Name	CHAR (48)	49 - 96
Latitude	Fixed Binary (31)	97 - 100
Longitude	Fixed Binary (31)	101 - 104
Lat-Long Accuracy	CHAR (1)	105
Site Type	CHAR (2)	106 - 107
Country Code	CHAR (2)	108 - 109
Reserved Space	CHAR (1)	110
State Code	Fixed Binary (15)	111 - 112
County Code	Fixed Binary (15)	113 - 114
Reserved Space	CHAR (2)	115 - 116
State-County Code	Fixed Binary (31)	117 - 120
District Code	CHAR (2)	121 - 122
Reserved Space	CHAR (2)	123 - 124
Hydrologic Unit Code	Fixed Binary (31)	125 - 128
Office Code	Fixed Binary (31)	129 - 132
Total Drainage Area	Float Dec (6)	133 - 136
Contributing Drainage Area	Float Dec (6)	137 - 140
Altitude (Datum)	Float Dec (6)	141 - 144
Altitude Method of Meas.	CHAR (1)	145
Reserved Space	CHAR (3)	146 - 148
Altitude Accuracy	Float Dec (6)	149 - 152
River Reach Number	Fixed Binary (15)	153 - 154
River Reach Segment Flag	Fixed Binary (15)	155 - 156
Depth of Well	Float Dec (6)	157 - 160
Source of Well Depth Data	CHAR (1)	161
Reserved Space	CHAR (3)	162 - 164
Depth of Hole	Float Dec (6)	165 - 168
Principal Aquifer Code	CHAR (8)	169 - 176
Aquifer Type Code	CHAR (1)	177
Consolidated Aquifer Code	CHAR (1)	178
Basin Descriptor	(3) CHAR (1)	179 - 181
Use of Water	(3) CHAR (1)	182 - 184
Use of Site	(3) CHAR (1)	185 - 187
Other Data Available	(6) CHAR (1)	188 - 193
SW Active Code	CHAR (1)	194
GW Active Code	CHAR (1)	195
QW Active Code	CHAR (1)	196
BIO Active Code	CHAR (1)	197

[1] Data formats are given in PL/1 notation.

Table C-1.--Format of Master Water Data Index (MWDI) input data records--Continued

Data Element Name	Data Format[1]	Byte Positions
Site Descriptor Data - Continued	---	---
PHY Active Code	CHAR (1)	198
SED Active Code	CHAR (1)	199
CHM Active Code	CHAR (1)	200
MET Active Code	CHAR (1)	201
Reserved Space	CHAR (3)	202 - 204
Date of Last Update	Fixed Binary (31)	205 - 208
Node Location Information	---	---
DIS Node Identifier	CHAR (6)	209 - 214
SW Data Code	CHAR (1)	215
GW Data Code	CHAR (1)	216
QW Data Code	CHAR (1)	217
MET Data Code	CHAR (1)	218
Other Data Code	CHAR (1)	219
Reserved Space	CHAR (1)	220
Node Date of Last Update	Fixed Binary (31)	221 - 224
Surface Water Data	---	---
SW Begin Year	PIC '999R'	225 - 228
SW End Year	PIC '999R'	229 - 232
SW Interrupted Code	CHAR (1)	233
Complete Stage	CHAR (1)	234
Peak Stage	CHAR (1)	235
Low Stage	CHAR (1)	236
Stage Storage Media	CHAR (1)	237
Complete Flow	CHAR (1)	238
Peak Flow	CHAR (1)	239
Low Flow	CHAR (1)	240
Miscellaneous Flow Meas.	CHAR (1)	241
Flow Storage Media	CHAR (1)	242
Volume	CHAR (1)	243
Volume Change	CHAR (1)	244
Volume Storage Media	CHAR (1)	245
Unit Flow	CHAR (1)	246
Unit Stage	CHAR (1)	247
Unit Volume	CHAR (1)	248
SW Other Data Available	CHAR (12)	249 - 260
SW Telemetry Code	PIC 'R'	261
SW Date of Last Update	CHAR (4)	262 - 265
SW Purpose Code	CHAR (9)	266 - 274
SW Recorder Type Code	CHAR (1)	275
SW Recorder Frequency Code	CHAR (1)	276

Table C-1.--Format of Master Water Data Index (MWDI) input data records--Continued

Data Element Name	Data Format[1]	Byte Positions
SW Modifiers (10)	---	277 - 356
SW Pointer	CHAR (7)	
SW Mod File	CHAR (1)	
Ground Water Data	---	---
GW Begin Year	PIC '999R'	357 - 360
GW End Year	PIC '999R'	361 - 364
GW Interrupted Code	CHAR (1)	365
Water-Level Frequency	CHAR (1)	366
Water-Level Storage Media	CHAR (1)	367
Discharge Frequency	CHAR (1)	368
Discharge Storage Media	CHAR (1)	369
Subsidence Frequency	CHAR (1)	370
Subsidence Storage Media	CHAR (1)	371
GW Other Data Available	CHAR (12)	372 - 383
Major Variations Code	CHAR (4)	384 - 387
GW Telemetry Code	PIC 'R'	388
GW Date of Last Update	CHAR (4)	389 - 392
GW Purpose Code	CHAR (9)	393 - 401
GW Recorder Type Code	CHAR (1)	402
GW Recorder Frequency Code	CHAR (1)	403
GW Modifiers (10)	---	404 - 483
GW Pointer	CHAR (7)	---
GW Mod File	CHAR (1)	---
Quality of Water Data	---	---
QW Begin Year	PIC '999R'	484 - 487
QW End Year	PIC '999R'	488 - 491
QW Interrupted Code	CHAR (1)	492
QW Telemetry Code	CHAR (1)	493
QW Date of Last Update	CHAR (4)	494 - 497
QW Purpose Code	CHAR (9)	498 - 506
QW Recorder Type Code	CHAR (1)	507
QW Recorder Frequency Code	CHAR (1)	508
STORET Pointer	CHAR (7)	509 - 515
QW Modifiers (10)	---	516 - 595
QW Pointer	CHAR (7)	---
QW Mod File	CHAR (1)	---

Table C-1.--Format of Master Water Data Index (MWDI) input data records--Continued

Data Element Name	Data Format[1]	Byte Positions
Biological Data	---	---
Enteric Bacteria	CHAR (1)	596
Native Bacteria	CHAR (1)	597
Phytoplankton	CHAR (1)	598
Zooplankton	CHAR (1)	599
Periphyton	CHAR (1)	600
Macrophyton	CHAR (1)	601
Microinvertebrates	CHAR (1)	602
Macroinvertebrates	CHAR (1)	603
Vertebrates	CHAR (1)	604
Fungi	CHAR (1)	605
Viruses	CHAR (1)	606
BIO Begin Year	CHAR (4)	607 - 610
BIO End Year	CHAR (4)	611 - 614
BIO Date of Last Update	CHAR (4)	615 - 618
BIO Storage Media	CHAR (1)	619
Primary Productivity	CHAR (1)	620
Secondary Productivity	CHAR (1)	621
Chemosynthetic Activity	CHAR (1)	622
Biostimulatory Test	CHAR (1)	623
Toxicity Test	CHAR (1)	624
Other Bio-Assay Test	CHAR (1)	625
Chemical Tissue Analysis	CHAR (1)	626
Histopathic Analysis	CHAR (1)	627
Other Tissue Analyses	CHAR (1)	628
BIO Modifiers (10)	---	629 - 708
BIO Pointer	CHAR (7)	---
BIO Mod File	CHAR (1)	---
QW Physical Data	---	---
Temperature	CHAR (1)	709
Specific Conductance	CHAR (1)	710
Turbidity	CHAR (1)	711
Color	CHAR (1)	712
Odor	CHAR (1)	713
pH	CHAR (1)	714
Suspended Solids	CHAR (1)	715
PHY Begin Year	CHAR (4)	716 - 719
PHY End Year	CHAR (4)	720 - 723
PHY Date of Last Update	CHAR (4)	724 - 727
PHY Storage Media	CHAR (1)	728

Table C-1.--Format of Master Water Data Index (MWDI) input data records--Continued

Data Element Name	Data Format[1]	Byte Positions
PHY Modifiers (10)	---	729 - 808
PHY Pointer	CHAR (7)	---
PHY Mod File	CHAR (1)	---
QW Sediment Data	---	---
Bed Load	CHAR (1)	809
Suspended Concentration	CHAR (1)	810
Total Concentration	CHAR (1)	811
Suspended Particle Size	CHAR (1)	812
Bed Particle Size	CHAR (1)	813
Suspended Sediment Discharge	CHAR (1)	814
Total Sediment Discharge	CHAR (1)	815
SED Begin Year	CHAR (4)	816 - 819
SED End Year	CHAR (4)	820 - 823
SED Date of Last Update	CHAR (4)	824 - 827
SED Storage Media	CHAR (1)	828
SED Modifiers (10)	---	829 - 908
SED Pointer	CHAR (7)	---
SED Mod File	CHAR (1)	---
QW Chemical Data	---	---
Dissolved Solids	CHAR (1)	909
Major Ions	CHAR (1)	910
Hardness	CHAR (1)	911
Silica	CHAR (1)	912
Phosphorus	CHAR (1)	913
Phosphorus Species	CHAR (1)	914
Nitrogen	CHAR (1)	915
Nitrogen Species	CHAR (1)	916
Detergents	CHAR (1)	917
Other Minor Constituents	CHAR (1)	918
Radioactivity	CHAR (1)	919
Radiochemical Species	CHAR (1)	920
Carbon	CHAR (1)	921
Organic Groups	CHAR (1)	922
Pesticide Species	CHAR (1)	923
Other Organic Species	CHAR (1)	924
Biochemical Oxygen Demand	CHAR (1)	925
Chemical Oxygen Demand	CHAR (1)	926
Dissolved Oxygen	CHAR (1)	927
Other Dissolved Gases	CHAR (1)	928

Table C-1.--Format of Master Water Data Index (MWDI) input data records--Continued

Data Element Name	Data Format[1]	Byte Positions
QW Chemical Data - Continued	---	---
CHM Begin Year	CHAR (4)	929 - 932
CHM End Year	CHAR (4)	933 - 936
CHM Date of Last Update	CHAR (4)	937 - 940
CHM Storage Media	CHAR (1)	941
CHM Modifiers (10)	---	942 - 1021
CHM Pointer	CHAR (7)	---
CHM Mod File	CHAR (1)	---
Projects (10)	---	1022 - 1071
WRD Project Number	CHAR (5)	---
Networks (10)	---	1072 - 1111
Network Code	CHAR (4)	---
Other Source (10)	---	1112 - 1161
Other Source Agency	CHAR (5)	---
Source Information (10)	---	1162 - 1281
Source File Identifier	CHAR (4)	---
Source File Agency	CHAR (8)	---
Meteorological Data	---	---
MET Begin Year	CHAR (4)	1282 - 1285
MET End Year	CHAR (4)	1286 - 1289
MET Interrupted Code	CHAR (1)	1290
Rainfall	CHAR (1)	1291
Unit Rainfall	CHAR (1)	1292
Air Temperature	CHAR (1)	1293
Wind Velocity	CHAR (1)	1294
MET Other Data Available	CHAR (12)	1295 - 1306
MET Telemetry Code	CHAR (1)	1307
MET Date of Last Update	CHAR (4)	1308 - 1311
MET Storage Media	CHAR (1)	1312
MET Recorder Type Code	CHAR (1)	1313
MET Recorder Frequency Code	CHAR (1)	1314
MET Modifiers (10)	---	1315 - 1394
MET Pointer	CHAR (7)	---
MET Mod File	CHAR (1)	---

[1] Data formats are given in PL/1 notation.

Table C-2.--Format of National Water Data Storage and Retrieval System (WATSTORE) unit-values file input records

Data Element Name	Data Format[1]	Byte Positions
Reserved Space	CHAR (1)	1
Record Format	CHAR (1)	2
State Code	CHAR (2)	3 - 4
Agency Code	CHAR (5)	5 - 9
Station Identifier	CHAR (15)	10 - 24
Cross Section Locator	Float Dec (6)	25 - 28
Depth Locator	Float Dec (6)	29 - 32
Parameter Code	Fixed Binary (31)	33 - 36
Year Number	Fixed Binary (15)	37 - 38
Month Number	Fixed Binary (15)	39 - 40
Day Number	Fixed Binary (15)	41 - 42
Statistic Code	Fixed Binary (15)	43 - 44
Readings Per Day	Fixed Binary (15)	45 - 46
First Reading Position	Fixed Binary (15)	47 - 48
Number of Readings	Fixed Binary (15)	49 - 50
Retrieval Sequence Number	Fixed Binary (15)	51 - 52
Reserved Space	CHAR (9)	53 - 61
Site Code	CHAR (2)	62 - 63
District Code	CHAR (2)	64 - 65
County Code	CHAR (3)	66 - 68
Create Date	Fixed Binary (31)	69 - 72
Reserved Space	CHAR (4)	73 - 76
Missing Value Indicator	Float Dec (6)	77 - 80
Unit Values	Float Dec (6)	81 - **

[1] Data formats are given in PL/1 notation.

** - The unit values are stored in a variable-length array. The length of the array is determined by the value stored in byte positions 49 - 50 (number of readings). For example, if the number of readings equals 24, the unit values will be stored in byte positions 81 - 176. The maximum record length is 11,600 bytes (2880 readings per day). See the WATSTORE, 1978, User's Guide, v. 5, chap. III, sec. III.3, p. 31, for a further description of data storage in the record.

NOTE: If all unit values stored in the record are equal to the missing value indicator (byte positions 77 - 80) or the value 999998, the record will be rejected.

Table C-3.--Format of unique site identifier input/output records

Data Element Name	Data Format[1]	Byte Positions
State Code	Fixed Binary (31)	1 - 4
Next Available Unique Site Id	Fixed Binary (31)	5 - 8

[1] Data formats are given in PL/1 notation.

APPENDIX D. OUTPUT FILE FORMATS

Table D-1.--Format of Master Water Data Index (MWDI) Output Data Records

Data Element Name	Data Format[1]	Byte Positions
Site Descriptor Data	---	---
Unique Site Identifier	Fixed Binary (31)	1 - 4
Agency Code	CHAR (5)	5 - 9
Agency Station Number	CHAR (15)	10 - 24
Local Well Number	CHAR (24)	25 - 48
Station Name	CHAR (48)	49 - 96
Latitude	Fixed Binary (31)	97 - 100
Longitude	Fixed Binary (31)	101 - 104
Lat-Long Accuracy	CHAR (1)	105
Site Type	CHAR (2)	106 - 107
Country Code	CHAR (2)	108 - 109
Reserved Space	CHAR (1)	110
State Code	Fixed Binary (15)	111 - 112
County Code	Fixed Binary (15)	113 - 114
Reserved Space	CHAR (2)	115 - 116
State-County Code	Fixed Binary (31)	117 - 120
District Code	CHAR (2)	121 - 122
Reserved Space	CHAR (2)	123 - 124
Hydrologic Unit Code	Fixed Binary (31)	125 - 128
Office Code	Fixed Binary (31)	129 - 132
Total Drainage Area	Float Dec (6)	133 - 136
Contributing Drainage Area	Float Dec (6)	137 - 140
Altitude (Datum)	Float Dec (6)	141 - 144
Altitude Method of Meas.	CHAR (1)	145
Reserved Space	CHAR (3)	146 - 148
Altitude Accuracy	Float Dec (6)	149 - 152
River Reach Number	Fixed Binary (15)	153 - 154
River Reach Segment Flag	Fixed Binary (15)	155 - 156
Depth of Well	Float Dec (6)	157 - 160
Source of Well Depth Data	CHAR (1)	161
Reserved Space	CHAR (3)	162 - 164
Depth of Hole	Float Dec (6)	165 - 168
Principal Aquifer Code	CHAR (8)	169 - 176
Aquifer Type Code	CHAR (1)	177
Consolidated Aquifer Code	CHAR (1)	178
Basin Descriptor	(3) CHAR (1)	179 - 181
Use of Water	(3) CHAR (1)	182 - 184
Use of Site	(3) CHAR (1)	185 - 187
Other Data Available	(6) CHAR (1)	188 - 193
SW Active Code	CHAR (1)	194
GW Active Code	CHAR (1)	195
QW Active Code	CHAR (1)	196
BIO Active Code	CHAR (1)	197

[1] Data formats are given in PL/1 notation.

Table D-1.--Format of Master Water Data Index (MWDI) Output Data Records--Continued

Data Element Name	Data Format[1]	Byte Positions
Site Descriptor Data - Continued	---	---
PHY Active Code	CHAR (1)	198
SED Active Code	CHAR (1)	199
CHM Active Code	CHAR (1)	200
MET Active Code	CHAR (1)	201
Reserved Space	CHAR (3)	202 - 204
Date of Last Update	Fixed Binary (31)	205 - 208
Node Location Information	---	---
DIS Node Identifier	CHAR (6)	209 - 214
SW Data Code	CHAR (1)	215
GW Data Code	CHAR (1)	216
QW Data Code	CHAR (1)	217
MET Data Code	CHAR (1)	218
Other Data Code	CHAR (1)	219
Reserved Space	CHAR (1)	220
Node Date of Last Update	Fixed Binary (31)	221 - 224
Surface-Water Data	---	---
SW Begin Year	PIC '999R'	225 - 228
SW End Year	PIC '999R'	229 - 232
SW Interrupted Code	CHAR (1)	233
Complete Stage	CHAR (1)	234
Peak Stage	CHAR (1)	235
Low Stage	CHAR (1)	236
Stage Storage Media	CHAR (1)	237
Complete Flow	CHAR (1)	238
Peak Flow	CHAR (1)	239
Low Flow	CHAR (1)	240
Miscellaneous Flow Meas.	CHAR (1)	241
Flow Storage Media	CHAR (1)	242
Volume	CHAR (1)	243
Volume Change	CHAR (1)	244
Volume Storage Media	CHAR (1)	245
Stage Type	CHAR (2)	246 - 247
Stage Frequency Code	CHAR (1)	248
Flow Type	CHAR (2)	249 - 250
Flow Frequency Code	CHAR (1)	251
Volume Type	CHAR (2)	252 - 253
Volume Frequency Code	CHAR (1)	254
Velocity Type	CHAR (2)	255 - 256
Velocity Frequency Code	CHAR (1)	257

Table D-1.--Format of Master Water Data Index (MWDI) Output Data Records--Continued

Data Element Name	Data Format[1]	Byte Positions
Surface-Water Data - Continued	---	---
Basin Characteristics Data Availability Code	CHAR (1)	258
SW Data Storage Media	CHAR (1)	259
SW Telemetry Code	CHAR (1)	260
SW Recorder Type Code	CHAR (1)	261
SW Data Purpose Code	(4) CHAR (1)	262 - 265
Other Surface-Water Related Data	(12) CHAR (1)	266 - 277
SW Seasonal Code	CHAR (1)	278
Reserved Space	CHAR (2)	279 - 280
SW Date of Last Update	Fixed Binary (31)	281 - 284
SW Data Base Identifiers (4)	---	285 - 332
SW Data Base Identifier	CHAR (4)	---
SW Data Base Subset Ident.	CHAR (4)	---
SW Data Base Date of Last Update	Fixed Binary (31)	---
Ground Water Data	---	---
GW Begin Year	PIC '999R'	333 - 336
GW End Year	PIC '999R'	337 - 340
GW Interrupted Code	CHAR (1)	341
Water-Level Frequency	CHAR (1)	342
Water-Level Storage Media	CHAR (1)	343
Discharge Frequency	CHAR (1)	344
Discharge Storage Media	CHAR (1)	345
Subsidence Frequency	CHAR (1)	346
Subsidence Storage Media	CHAR (1)	347
GW Other Data Available	CHAR (12)	348 - 359
Major Variations Code	CHAR (4)	360 - 363
GW Telemetry Code	PIC 'R'	364
GW Date of Last Update	CHAR (4)	365 - 368
GW Purpose Code	CHAR (9)	369 - 377
GW Recorder Type Code	CHAR (1)	378
GW Recorder Frequency Code	CHAR (1)	379
GW Modifiers (10)	---	380 - 459
GW Pointer	CHAR (7)	---
GW Mod File	CHAR (1)	---

Table D-1.--Format of Master Water Data Index (MWDI) Output Data Records--Continued

Data Element Name	Data Format[1]	Byte Positions
Quality of Water Data	---	---
QW Begin Year	PIC '999R'	460 - 463
QW End Year	PIC '999R'	464 - 467
QW Interrupted Code	CHAR (1)	468
QW Telemetry Code	CHAR (1)	469
QW Date of Last Update	CHAR (4)	470 - 473
QW Purpose Code	CHAR (9)	474 - 482
QW Recorder Type Code	CHAR (1)	483
QW Recorder Frequency Code	CHAR (1)	484
STORET Pointer	CHAR (7)	485 - 491
QW Modifiers (10)	---	492 - 571
QW Pointer	CHAR (7)	---
QW Mod File	CHAR (1)	---
Biological Data	---	---
Enteric Bacteria	CHAR (1)	572
Native Bacteria	CHAR (1)	573
Phytoplankton	CHAR (1)	574
Zooplankton	CHAR (1)	575
Periphyton	CHAR (1)	576
Macrophyton	CHAR (1)	577
Microinvertebrates	CHAR (1)	578
Macroinvertebrates	CHAR (1)	579
Vertebrates	CHAR (1)	580
Fungi	CHAR (1)	581
Viruses	CHAR (1)	582
BIO Begin Year	CHAR (4)	583 - 586
BIO End Year	CHAR (4)	587 - 590
BIO Date of Last Update	CHAR (4)	591 - 594
BIO Storage Media	CHAR (1)	595
Primary Productivity	CHAR (1)	596
Secondary Productivity	CHAR (1)	597
Chemosynthetic Activity	CHAR (1)	598
Biostimulatory Test	CHAR (1)	599
Toxicity Test	CHAR (1)	600
Other Bio-Assay Test	CHAR (1)	601
Chemical Tissue Analysis	CHAR (1)	602
Histopathic Analysis	CHAR (1)	603
Other Tissue Analyses	CHAR (1)	604
BIO Modifiers (10)	---	605 - 684
BIO Pointer	CHAR (7)	---
BIO Mod File	CHAR (1)	---

Table D-1.--Format of Master Water Data Index (MWDI) Output Data Records--Continued

Data Element Name	Data Format[1]	Byte Positions
QW Physical Data	---	---
Temperature	CHAR (1)	685
Specific Conductance	CHAR (1)	686
Turbidity	CHAR (1)	687
Color	CHAR (1)	688
Odor	CHAR (1)	689
pH	CHAR (1)	690
Suspended Solids	CHAR (1)	691
PHY Begin Year	CHAR (4)	692 - 695
PHY End Year	CHAR (4)	696 - 699
PHY Date of Last Update	CHAR (4)	700 - 703
PHY Storage Media	CHAR (1)	704
PHY Modifiers (10)	---	705 - 784
PHY Pointer	CHAR (7)	---
PHY Mod File	CHAR (1)	---
QW Sediment Data	---	---
Bed Load	CHAR (1)	785
Suspended Concentration	CHAR (1)	786
Total Concentration	CHAR (1)	787
Suspended Particle Size	CHAR (1)	788
Bed Particle Size	CHAR (1)	789
Suspended Sediment Discharge	CHAR (1)	790
Total Sediment Discharge	CHAR (1)	791
SED Begin Year	CHAR (4)	792 - 795
SED End Year	CHAR (4)	794 - 799
SED Date of Last Update	CHAR (4)	800 - 803
SED Storage Media	CHAR (1)	804
SED Modifiers (10)	---	805 - 884
SED Pointer	CHAR (7)	---
SED Mod File	CHAR (1)	---
QW Chemical Data	---	---
Dissolved Solids	CHAR (1)	885
Major Ions	CHAR (1)	886
Hardness	CHAR (1)	887
Silica	CHAR (1)	888
Phosphorus	CHAR (1)	889
Phosphorus Species	CHAR (1)	890

Table D-1.--Format of Master Water Data Index (MWDI) Output Data Records--Continued

Data Element Name	Data Format[1]	Byte Positions
QW Chemical Data - Continued	---	---
Nitrogen	CHAR (1)	891
Nitrogen Species	CHAR (1)	892
Detergents	CHAR (1)	893
Other Minor Constituents	CHAR (1)	894
Radioactivity	CHAR (1)	895
Radiochemical Species	CHAR (1)	896
Carbon	CHAR (1)	897
Organic Groups	CHAR (1)	898
Pesticide Species	CHAR (1)	899
Other Organic Species	CHAR (1)	900
Biochemical Oxygen Demand	CHAR (1)	901
Chemical Oxygen Demand	CHAR (1)	902
Dissolved Oxygen	CHAR (1)	903
Other Dissolved Gases	CHAR (1)	904
CHM Begin Year	CHAR (4)	905 - 908
CHM End Year	CHAR (4)	909 - 912
CHM Date of Last Update	CHAR (4)	913 - 916
CHM Storage Media	CHAR (1)	917
CHM Modifiers (10)	---	918 - 997
CHM Pointer	CHAR (7)	---
CHM Mod File	CHAR (1)	---
Projects (10)	---	998 - 1047
WRD Project Number	CHAR (5)	---
Networks (10)	---	1048 - 1087
Network Code	CHAR (4)	---
Other Source (10)	---	1088 - 1137
Other Source Agency	CHAR (5)	---
Source Information (10)	---	1138 - 1257
Source File Identifier	CHAR (4)	---
Source File Agency	CHAR (8)	---
Meteorological Data	---	---
MET Begin Year	CHAR (4)	1258 - 1261
MET End Year	CHAR (4)	1262 - 1265
MET Interrupted Code	CHAR (1)	1266
Rainfall	CHAR (1)	1267
Unit Rainfall	CHAR (1)	1268

Table D-1.--Format of Master Water Data Index (MWDI) Output Data Records--Continued

Data Element Name	Data Format[1]	Byte Positions
Meteorological Data - Continued	---	---
Air Temperature	CHAR (1)	1269
Wind Velocity	CHAR (1)	1270
MET Other Data Available	CHAR (12)	1271 - 1282
MET Telemetry Code	CHAR (1)	1283
MET Date of Last Update	CHAR (4)	1284 - 1287
MET Storage Media	CHAR (1)	1288
MET Recorder Type Code	CHAR (1)	1289
MET Recorder Frequency Code	CHAR (1)	1290
MET Modifiers (10)	---	1291 - 1370
MET Pointer	CHAR (7)	---
MET Mod File	CHAR (1)	---

[1] Data formats are given in PL/1 notation.

Table D-2.--Format of surface-water frequency history output records

Data Element Name	Data Format[1]	Byte Positions
Unique Site Identifier	Fixed Binary (31)	1 - 4
Agency Code	CHAR (5)	5 - 9
Agency Station Number	CHAR (15)	10 - 24
SW Year of Measurement	Fixed Binary (31)	25 - 28
Stage Type History	CHAR (2)	29 - 30
Stage Frequency History	CHAR (1)	31
Flow Type History	CHAR (2)	32 - 33
Flow Frequency History	CHAR (1)	34
Volume Type History	CHAR (2)	35 - 36
Volume Frequency History	CHAR (1)	37
Velocity Type History	CHAR (2)	38 - 39
Velocity Frequency History	CHAR (1)	40
SW History Date of Last Update	Fixed Binary (31)	41 - 44

[1] Data formats are given in PL/1 notation.

Table D-3.--Format of ground-water, quality of water, and meteorological transaction output records

Data Element Name	Data Format[1]	Byte Positions
Unique Site Identifier	Fixed Binary (31)	1 - 4
Agency Code	CHAR (5)	5 - 9
Agency Station Number	CHAR (15)	10 - 24
Parameter Code	Fixed Binary (31)	25 - 28
Year of Measurement	Fixed Binary (15)	29 - 30
Frequency Code	CHAR (1)	31
Seasonal Code	CHAR (1)	32
Data Base Identifier	CHAR (4)	33 - 36
Data Base Subset Identifier	CHAR (4)	37 - 40

[1] Data formats are given in PL/1 notation.

APPENDIX E. EXAMPLE OUTPUT LISTINGS

Example 1.--Data element counts for a state.

STATE: 42
TOTAL SITES IN: 5
TOTAL SITES OUT: 7
TOTAL SITES ADDED: 2

DATA ELEMENT COUNTS:

STATE: 42

DATA ELEMENT	TOTAL IN	TOTAL OUT
UNIQUE SITE IDENTIFIER	5	7
AGENCY STATION NUMBER	4	6
SW ACTIVE CODE	4	6
SW BEGIN YEAR	4	6
SW END YEAR	0	0
SW INTERRUPTED CODE	1	4
UNIT FLOWS	0	
UNIT STAGE	0	
UNIT VOLUMES	0	
SW OTHER DATA AVAILABLE	1	1
SW TELEMETRY CODE	0	0
SW PURPOSE CODE	2	
SW RECORDER TYPE CODE	0	4
STAGE TYPE		4
STAGE FREQUENCY CODE		4
FLOW TYPE		0
FLOW FREQUENCY CODE		0
VOLUME TYPE		0
VOLUME FREQUENCY CODE		0
VELOCITY TYPE		0
VELOCITY FREQUENCY CODE		0
SW DATA STORAGE MEDIA		4
SW SEASONAL CODE		4
SW DATE OF LAST UPDATE		6

```
SW DATA CODE                                    4
SW DATA PURPOSE CODE(1)                         2
SW DATA PURPOSE CODE(2)                         0
SW DATA PURPOSE CODE(3)                         0
SW DATA PURPOSE CODE(4)                         0
SW DATA BASE IDENTIFIER(1)                      4
SW DATA BASE SUBSET IDENTIFIER(1)               4
SW DATA BASE IDENTIFIER(2)                      1
SW DATA BASE SUBSET IDENTIFIER(2)               1
SW DATA BASE IDENTIFIER(3)                      1
SW DATA BASE SUBSET IDENTIFIER(3)               1
SW DATA BASE IDENTIFIER(4)                      0
SW DATA BASE SUBSET IDENTIFIER(4)               0

STATE:  42
NUMBER OF SITES WITH FREQUENCY HISTORIES:        4
NUMBER OF FREQUENCY HISTORY RECORDS:       12

STATE:  42
NUMBER OF GROUND-WATER TRANSACTIONS:        0
NUMBER OF QUALITY-OF-WATER TRANSACTIONS:        4
NUMBER OF METEOROLOGICAL TRANSACTIONS:        0
TOTAL NUMBER OF TRANSACTIONS:        4
```

Example 2.--Data element counts for a complete run.

PROCESSING COMPLETED

TOTAL SITES IN: 9
TOTAL SITES OUT: 11
TOTAL SITES ADDED: 2

PROCESSING COMPLETED

TOTAL DATA ELEMENT COUNTS:

DATA ELEMENT	TOTAL IN	TOTAL OUT
UNIQUE SITE IDENTIFIER	9	11
AGENCY STATION NUMBER	7	9
SW ACTIVE CODE	6	8
SW BEGIN YEAR	6	8
SW END YEAR	0	0
SW INTERRUPTED CODE	2	5
UNIT FLOWS	1	
UNIT STAGE	1	
UNIT VOLUMES	0	
SW OTHER DATA AVAILABLE	3	3
SW TELEMETRY CODE	0	0
SW PURPOSE CODE	3	
SW RECORDER TYPE CODE	0	4
STAGE TYPE		5
STAGE FREQUENCY CODE		5
FLOW TYPE		1
FLOW FREQUENCY CODE		1
VOLUME TYPE		0
VOLUME FREQUENCY CODE		0
VELOCITY TYPE		0
VELOCITY FREQUENCY CODE		0
SW DATA STORAGE MEDIA		4
SW SEASONAL CODE		4

```
SW DATE OF LAST UPDATE                          8
SW DATA CODE                                    4
SW DATA PURPOSE CODE(1)                         3
SW DATA PURPOSE CODE(2)                         0
SW DATA PURPOSE CODE(3)                         0
SW DATA PURPOSE CODE(4)                         0
SW DATA BASE IDENTIFIER(1)                      5
SW DATA BASE SUBSET IDENTIFIER(1)               5
SW DATA BASE IDENTIFIER(2)                      2
SW DATA BASE SUBSET IDENTIFIER(2)               2
SW DATA BASE IDENTIFIER(3)                      1
SW DATA BASE SUBSET IDENTIFIER(3)               1
SW DATA BASE IDENTIFIER(4)                      0
SW DATA BASE SUBSET IDENTIFIER(4)               0

PROCESSING COMPLETED

TOTAL NUMBER OF SITES WITH FREQUENCY HISTORIES:       4
TOTAL NUMBER OF FREQUENCY HISTORY RECORDS:           12

PROCESSING COMPLETED

TOTAL NUMBER OF GROUND-WATER TRANSACTIONS:            0
TOTAL NUMBER OF QUALITY-OF-WATER TRANSACTIONS:        4
TOTAL NUMBER OF METEOROLOGICAL TRANSACTIONS:          7
TOTAL NUMBER OF TRANSACTIONS:                        11
```

Example 3.--Validation listing for Master Water Data Index (MWDI) output.

```
UNIQUE SITE IDENTIFIER:  420000004
AGENCY CODE:  USGS
AGENCY STATION NUMBER:   01547200
SITE TYPE:  SW
STATE CODE:  42
COUNTY CODE:   27
STATE-COUNTY CODE:  42027
DISTRICT CODE:
OTHER DATA AVAILABLE:       6
SW ACTIVE CODE:  Y
SW DATA CODE:  Y
SW BEGIN YEAR:  1954
SW END YEAR:  0000
SW INTERRUPTED CODE:  N
STAGE TYPE:  C
STAGE FREQUENCY CODE:  C
FLOW TYPE:
FLOW FREQUENCY CODE:
VOLUME TYPE:
VOLUME FREQUENCY CODE:
VELOCITY TYPE:
VELOCITY FREQUENCY CODE:
SW DATA STORAGE MEDIA:  C
SW TELEMETRY CODE:
SW RECORDER TYPE CODE:  A
SW DATA PURPOSE CODE:  A
OTHER SURFACE-WATER RELATED DATA:
SW SEASONAL CODE:  S
SW DATE OF LAST UPDATE:  19870109
SW DATA BASE IDENTIFIER(1):  NWIS
SW DATA BASE SUBSET IDENTIFIER(1):  EE
SW DATA BASE DATE OF LAST UPDATE(1):  19870109
SW DATA BASE IDENTIFIER(2):  NWIS
SW DATA BASE SUBSET IDENTIFIER(2):  DV
SW DATA BASE DATE OF LAST UPDATE(2):  19870109
```

SW DATA BASE IDENTIFIER(3): NWIS
SW DATA BASE SUBSET IDENTIFIER(3): UV
SW DATA BASE DATE OF LAST UPDATE(3): 19870109
SW DATA BASE IDENTIFIER(4):
SW DATA BASE SUBSET IDENTIFIER(4):
SW DATA BASE DATE OF LAST UPDATE(4): 0

Example 4.--Validation listing for surface-water frequency output.

UNIQUE SITE IDENTIFIER: 420000004
AGENCY CODE: USGS
AGENCY STATION NUMBER: 01547200
SW YEAR OF MEASUREMENT: 1983
STAGE TYPE HISTORY: C
STAGE FREQUENCY HISTORY: C
FLOW TYPE HISTORY:
FLOW FREQUENCY HISTORY:
VOLUME TYPE HISTORY:
VOLUME FREQUENCY HISTORY:
VELOCITY TYPE HISTORY:
VELOCITY FREQUENCY HISTORY:
SW HISTORY DATE OF LAST UPDATE: 19870109

Example 5.--Validation listing for ground-water, quality-of-water, and meteorological transactions output.

UNIQUE SITE IDENTIFIER: 390000003
AGENCY CODE: USGS
AGENCY STATION NUMBER: 390425084230000
PARAMETER CODE: 45
YEAR OF MEASUREMENT: 1978
FREQUENCY CODE: C
SEASONAL CODE: S
DATA BASE IDENTIFIER: NWIS
DATA BASE SUBSET IDENTIFIER: UV

☆ U.S. GOVERNMENT PRINTING OFFICE: 1988 — 567-239/70016