DEPARTMENT OF THE INTERIOR
U.S. GEOLOGICAL SURVEY

OPEN-FILE REPORT
90-312

Geology by James G. Evans, 1985-86

Base from U.S. Geological Survey, 1967 (revised 1984)

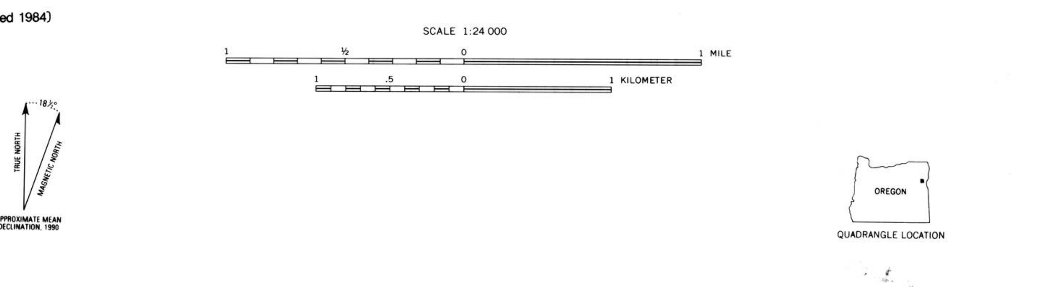

PRELIMINARY GEOLOGIC MAP OF THE DOOLEY MOUNTAIN QUADRANGLE, BAKER COUNTY, OREGON

By
James G. Evans
1990

This map is preliminary and has not been reviewed for conformity with U.S. Geological Survey editorial standards or with the North American Stratigraphic Code. Any use of trade, firm, or product names is for descriptive purposes only and does not imply endorsement by the U.S. Government.

CORRELATION OF MAP UNITS

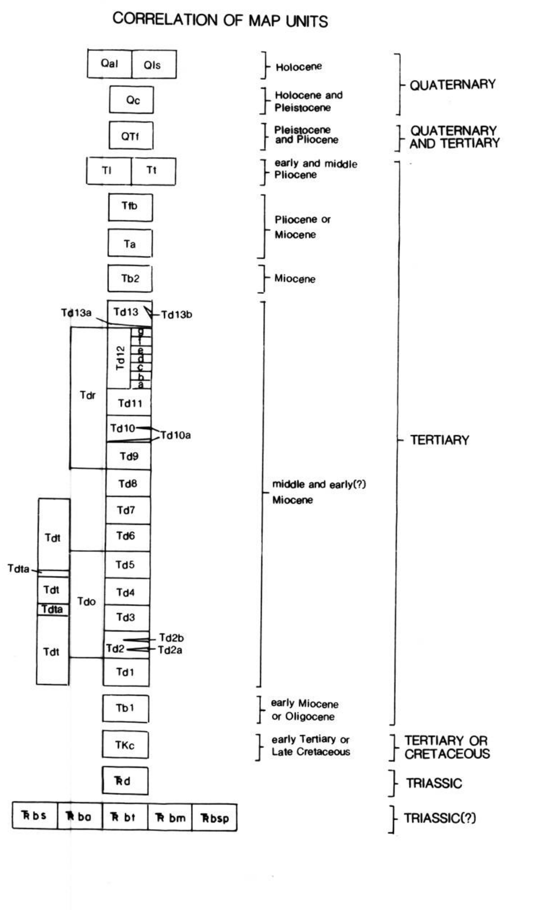

DESCRIPTION OF MAP UNITS

Qal **Alluvium (Holocene)**--Stream gravels, stream terraces, and narrow flood-plain deposits. Locally includes unconsolidated pale-gray tuff as much as 2 m thick, which may be remnants of tephra washed into valleys after explosive volcanic eruptions, probably to the west in the Cascades(?)

Qls **Landslide deposits (Holocene)**--Located mostly in southern part of quadrangle where poorly consolidated tuff and altered vitrophyre underlie welded tuff or rhyolite, especially where unit Td2 of the Dooley Volcanics underlies more resistant rocks

Qc **Colluvium (Holocene and Pleistocene)**--Unsorted boulders, pebbles, sand, silt, and clay mantling parts of main east-trending drainage divide in Beaver Mountain area. Most clasts are massive rhyolite from unit Td13 of the Dooley Volcanics

QTf **Fanglomerate (Pleistocene and Pliocene)**--Mostly coarse unconsolidated boulder conglomerate. Contains 50 percent angular to subangular clasts as much as 2 m long, but generally less than 15 cm. Clasts include laminated light-gray and white welded tuff, rhyolite, black obsidian, vitrophyre, minor basalt, and, locally, fragments derived from the Burnt River Schist (metavolcanic rock, slate, metachert, and white quartz). Matrix consists of brown sand, silt, and clay. Bedding is absent or as much as 1 m thick. Includes interbeds as much as 3 m thick of brown sand and silt and white tuffaceous silt. Locally caliche cemented. Maximum thickness is 60 m

Tl **Lacustrine sedimentary rocks (middle and early Pliocene)**--Mostly pale-gray to white poorly consolidated siltstone. Also contains flat limestone nodules as large as 6 cm in length, well-cemented tuffaceous sandstone, and unconsolidated conglomerate that has 25 percent angular tuff and welded-tuff fragments as much as 2 cm across. Unit found in southeast corner of quadrangle and is as much as 85 m thick. May be related to tuff unit (Tt) and may be part of the Idaho Group as mapped by Lowry (1968) in Ironside Mountain 30' quadrangle to the southwest (fig.1)

Tt **Tuff (middle and early Pliocene)**--Pale-gray, moderately well consolidated tuff that has faint laminar bedding. Breaks into large slabs as much as 1 m long. Unit overlies basalt unit (Tb2) in southwest corner of quadrangle. About 6 m thick

Tfb **Fault breccia (Pliocene or Miocene)**--Black and brown oxide-cemented rhyolite and slate breccia. Includes red, orange, and brown hematitic layer 30 cm thick. Located in upper part of Stices Gulch

Ta **Andesite (Pliocene or Miocene)**--Black and green porphyritic andesite and andesite breccia containing 50 percent angular to subangular fragments as much as 60 cm across in yellow, vesicular, tuffaceous matrix. Porphyritic andesite contains 15 to 20 percent plagioclase phenocrysts as much as 2 mm long in goundmass of plagioclase and minor pyroxene. Mafic minerals mostly altered to chlorite, hematite, and leucoxene. Intrudes unit Td2 (southwest corner of quadrangle) of the Dooley Volcanics but could be younger than member Td13

Tb2 **Basalt (Miocene)**--Black fine-grained basalt containing 5 to 35 percent phenocrysts as much as 5 mm long. Locally scoriaceous and contains hyaloclastite bed 5 m thick. Phenocrysts are mostly euhedral, twinned plagioclase laths and include minor olivine set in groundmass of trachytic plagioclase laths as much as 0.5 mm long and interstitial pyroxene, olivine, and magnetite. Olivine and pyroxene are nearly completely altered to serpentine and bowlingite; magnetite is altered to hematite. Overlies unit Td12 of the Dooley Volcanics and may be younger than unit Td13b. Mapped in northwest and southwest corners of quadrangle and includes dikes on east side of Auburn Creek; however, these outcrops are not all clearly related to same extrusive event. Thickest basalt section, in southwest corner, is 185 m. Tentatively assigned a Miocene age because flows in northwestern part are continuous with Miocene basalts in adjacent Bowen Valley 7.5' quadrangle (fig.1; Brooks and McIntyre, 1978)

Dooley Volcanics (middle and early? Miocene)--Divided into:

Td13 **Rhyolite dome and flows, undivided**--Mostly light-gray, massive, porphyritic rhyolite that has a basal zone of vitrophyre and vitrophyre breccia (Td13a) and is cut by dikes of rhyolite breccia (Td13b). Shows crude columnar jointing. Exposed on northern Dooley Mountain, Beaver Mountain, and Bald Ridge. A lobe extends south over truncated section of older ash-flow units (Td2 and Td3). Fills part of paleovalley on east side of Beaver Creek. Rhyolite is also purple, maroon, black, blue, and pink. Locally, has flow banding 1 to 4 cm thick. Contains 15 to 40 percent phenocrysts as much as 5 mm long, mostly euhedral to subhedral, fractured, twinned, and zoned plagioclase. Also, has less common subrounded quartz. Chief mafic mineral, comprising as much as 5 percent, was probably olivine but is now mostly altered to bowlingite, chlorite, magnetite, and hematite. Groundmass consists almost entirely of plagioclase laths .01 to .06 mm long, locally showing trachytic texture. Equant feldspar poikiloblasts as much as 0.2 mm across are found in groundmass. Thickest part of the dome is at least 245 m. Includes:

Td13a **Basal vitrophyre**--Contains 10 to 25 percent plagioclase phenocrysts as much as 4 mm long. Commonly perlitic and includes varieties of breccia: black vitrophyre breccia that contains 45 percent white angular rhyolite fragments as much as 1 cm across in glassy matrix, breccia containing 80 percent black and gray subangular to subrounded fragments of vitrophyre generally less than 15 cm thick (1.5 m maximum) in gray glassy matrix, and breccia that contains 50 percent fragments generally less than 30 cm across (1 m maximum) of black laminated massive vitrophyre in groundmass of gray massive rhyolite. Thickness is as much as 120 m

Td13b **Rhyolite breccia dikes**--Dark gray to black, glassy dikes containing angular fragments of vitrophyre as much as 15 cm across

Tdr **Rhyolite dikes**--Massive, generally white, aphyric to porphyritic rhyolite dikes ranging from 1 to 600 m wide. Especially common cutting unit Td3 in vicinity of unit Td9 in Stices Gulch-Cornet Creek area. Includes later dike cutting member Td12 on west side of Beaver Creek. Locally is lavender or pale greenish gray, and contains zones of brecciated rhyolite that is stained brown, black, and red by oxides. Some rock has undergone argillic alteration. Contains as much as 15 percent phenocrysts of euhedral and subhedral plagioclase as much as 3 mm long and minor rounded to subrounded quartz. Most samples have less than 5 percent phenocrysts. Locally, very fine grained groundmass is mostly recrystallized to spherulites; plagioclase is mostly altered to sericite and clays; and mafic minerals, possibly originally ilmenite, olivine, and (or) pyroxene, are altered to chlorite, hematite, limonite, and leucoxene. Granophyric crystallization also found locally

Td12 **Welded tuff, tuff, and lithic ash-flow tuff, undivided**--Laminated, thinly layered, gray welded tuff, locally purple, lavender, black, brown, white, and pink. Contains 0 to 15 percent phenocrysts as much as 4 mm long, mainly euhedral to anhedral plagioclase. Contains layers of welded lithic ash-flow tuff that have as much as 50 percent angular to subrounded fragments, generally less than 3 cm across, of rhyolite and welded tuff, lapilli tuff, and lithic ash-flow tuff that contains angular blocks of the Burnt River Schist as much as 50 cm across. Some is eutaxitic. Tuff and lithic ash-flow tuff are especially common near base of unit. Maximum local thickness varies from 365 to 580 m. Locally divided into:

Upper cooling unit, consisting of:

Td12g **Welded lithic ash-flow tuff**--About 8 m thick. Recognized on ridge on west side of Beaver Creek

Td12f **Glassy, partly welded tuff**--Lithic ash-flow tuff and vitrophyre breccia, as much as 80 m thick. Recognized on ridge on west side of Beaver Creek

Middle cooling unit, consisting of:

Td12e **Laminated welded tuff**--As much as 135 m thick. Recognized on west side of Beaver Creek and east side of West Fork Sutton Creek

Td12d **Vitrophyre and glassy welded tuff**--As much as 85 m thick. Recognized on west side of Beaver Creek and along West Fork Sutton Creek

Lower cooling unit, consisting of:

Td12c **Laminated welded tuff**--As much as 150 m thick. Recognized on west side of Beaver Creek and east side of West Fork Sutton Creek

Td12b **Partly consolidated tuff and vitrophyre**--As much as 75 m thick. Recognized along Beaver Creek

Td12a **Lithic ash-flow tuff and tuff**--In lowermost part, as much as 55 m thick. Recognized in Stices Gulch and Trail Creek

Td11 **Vent breccia**--Mostly dark-gray and brown, massive to faintly bedded breccia containing 25 to 95 percent angular to subrounded fragments of basalt, vitrophyre, welded tuff, and welded lithic ash-flow tuff generally less than 15 cm thick (1 m maximum). Unit contains welded lithic ash-flow tuff that has pink welded tuff matrix and pale-gray and black, poorly cemented, thickly bedded tuff. Some breccia is porous and cemented by silica and hematite. Axiolitic texture in matrix. Breccia cut by aphanitic white rhyolite dikes. Unit contains thin basalt and rhyolite flows and at least one small rhyolite dome (d). Basalt contains 10 to 25 percent phenocrysts as much as 2 mm long, mostly twinned plagioclase laths, and subordinate pyroxene and olivine in a groundmass of plagioclase laths as much as 0.3 mm long. Original composition was 65 to 95 percent plagioclase and 5 to 35 percent mafic minerals. Ilmenite is a minor constituent. Mafic minerals are almost completely altered to biotite, chlorite, zoisite, magnetite, garnet, and hematite. Olivine is altered to bowlingite. Ilmenite is altered to sphene and leucoxene. Plagioclase is altered to sericite. Poikiloblasts of feldspar are found in groundmass. Rhyolitic welded tuff contains as much as 20 percent phenocrysts, mostly plagioclase, that have undergone slight spherulitic recrystallization. A vertical section of 300 m is exposed on east side of Stices Gulch

Td10 **Welded tuff**--Consists of several cooling units that are not mappable due to poor exposures. Best partial section, exposed near Dooley Summit, is gray eutaxite succeeded upward by lithophysal zone (lithophysae as much as 2 cm across) and capped by white and pale-gray, laminated to massive welded tuff containing as much as 15 percent plagioclase phenocrysts that are as much as 2 mm long. Most outcrops are laminated welded tufflike rocks near Dooley Summit, but unit also includes black, lavender, purple, and maroon welded tuff. In places, laminae form disharmonic and nearly isoclinal folds, which are most likely due to secondary flowage. Locally contains discontinuous zones of:

Td10a **Black vitrophyre, gray tuff, and lithic ash-flow tuff**--Lithic ash-flow tuff containing as much as 50 percent angular fragments of black and gray vitrophyre, obsidian, glassy welded tuff, and, rarely, metachert less than 6 cm across (20 cm maximum). Recrystallization in parts of the unit, possibly due to heat from emplacement of unit Td11 (vent breccia), has nearly obliterated phenocrysts, lithic fragments, and laminae. Maximum thickness is 275 m. These glassy rocks form lower parts of cooling units in member

Td9 **Rhyolite dome, dikes, and flows**--Identical to rhyolite dikes (Tdr) described above. Recognized in upper parts of Mill Creek, Cornet Creek, and Stices Gulch. Remnant dome in sec. 31, T. 11 S., R. 40 E. is 200 m thick. Flows along west edge of quadrangle are 75 m thick

Td8 **Fissure-vent breccia**--Recognized in west-central part of quadrangle. Contains 60 to 90 percent angular to subrounded fragments, mostly white aphanitic rhyolite. Some blocks as much as 10 m across, but most fragments less than 6 cm. Parts of unit have abundant conspicuous black angular fragments of slate and chert identical to the Burnt River Schist. Pale-gray matrix is welded tuff consisting mostly of quartz and plagioclase. Much of the plagioclase is altered to sericite. Relict clinopyroxene present; most mafic minerals are altered to limonite, chlorite and hematite. Contains traces of epidote, sulfides in slate fragments, and sphene partly altered to leucoxene. About 300 m vertical section exposed. Breccia dikes (too small to show at map scale) that may be related to unit cut unit Td3 on east side of lower part of Mill Creek

Tdt **Welded tuff**--Principally welded tuff equivalent to units Td1 through Td7. Recognized in Segundo Spring area and possibly in northwest corner of quadrangle. Locally contains:

Tdta **Vitrophyre**

Td7 **Welded tuff**--Gray, purple, and maroon, laminated to layered (beds ranging from 1 to 6 cm thick) welded tuff. Locally massive. Also contains black vesicular glass and vitrophyre breccia. Welded tuff has as much as 10 percent phenocrysts that are as much as 2 mm long and consist of mostly subhedral, angular, and very fractured plagioclase and minor subrounded to rounded quartz. Matrix of felty plagioclase laths ranging from 0.03 to 0.2 mm long that are probably a result of devitrification because faintly preserved laminae cut across laths. At least 490 m in thickness in sec. 25, T. 11 S., R. 40 E.

Td6 **Vitrophyre and lithic ash-flow tuff**--Includes laminated vitrophyre, glassy welded tuff, welded lithic ash-flow tuff, and vitrophyre breccia. Breccia contains as much as 85 percent angular to subrounded fragments of tuff, massive and laminated black vitrophyre, obsidian, devitrified welded tuff, pumice, andesite, basalt, tachylite, and metachert. Breccias show internal unconformities. In tuff, fragments are generally less than 15 cm across (2 m maximum). In addition to collapsed pumice fragments and lithic fragments, tuff matrix contains as much as 5 percent plagioclase phenocrysts as much as 1 mm long and minor quartz. Vitrophyre and altered mafic minerals (orthopyroxene and olivine). Unit is 60 m thick

Tdo **Obsidian dikes**--Black, massive or laminated obsidian containing as much as 5 percent phenocrysts, which are as much as 0.2 mm long, of euhedral and subhedral plagioclase, biotite, and hornblende (mafic minerals as much as 1 percent). Trichites are abundant in glassy groundmass. Groundmass has minor perlitic cracks and zones of devitrification (cryptocrystalline and birefringent zones). Massive obsidian dikes intrude unit Td1. Laminated obsidian dike intrudes unit Td3

Td5 **Welded tuff**--White, pale-gray, yellow, lavender, pink, purplish-gray, and black laminated welded tuff. Locally laminae are crenulated and contorted. Contains lithophysal zones. Locally weathers to pinnacles as much as 3 m high. More commonly forms platy rubble containing slabs 2 to 6 cm thick. Has 0 to 10 percent phenocrysts as long as 2 mm, consisting mostly of subhedral, subangular plagioclase and minor quartz. Matrix consists of quartz and feldspar grains as much as 0.2 mm long and cryptocrystalline material. Altered mafic minerals include olivine and clinopyroxene. Includes rhyolite breccia that contains 25 to 60 percent angular fragments generally less than 2 cm across (30 cm maximum) of laminated welded tuff. Unit is 60 to 90 m thick

Td4 **Tuff, glassy breccia, and vitrophyre**--Mostly poorly lithified tuff and lithic ash-flow tuff, perlitic vitrophyre, and minor gray laminated welded tuff. Layering ranges from 1 cm to 1 m thick. Breccia contains as much as 50 percent angular to subangular fragments generally less than 10 cm across (1 m maximum) of black vitrophyre, banded welded tuff, and, locally, basalt, metachert, and schist. Welded tuff has 2 percent plagioclase phenocrysts as long as 0.5 mm and rare rounded quartz phenocrysts. Spherulites are common in matrix and tridymite is locally abundant. Unit is 40 to 60 m thick

Td3 **Welded tuff**--Mostly white, laminated and thinly layered, devitrified welded tuff. Also includes gray, purple, black, pink, lavender, maroon, light-brown and yellow welded tuff. Layers range from 2 mm to 2 cm thick. Laminae usually planar but also intricately folded in places (concentric, isoclinal, disharmonic, chevron, polyclinal, and rootless folds). Fold amplitudes range from 1 mm to a few meters. Has 0 to 10 percent phenocrysts of mostly euhedral and subhedral zoned and twinned plagioclase and less common quartz. Rare relict grains of biotite and olivine, and pseudomorphs of chlorite after pyroxene. Largely cryptocrystalline matrix has undergone extensive recrystallization to spherulites. In some places plagioclase is mostly altered to sericite. Contains less than 5 percent welded-tuff breccia that has as much as 50 percent angular to subangular fragments of massive and laminated welded tuff, rhyolite, and metachert generally less than 4 cm across (30 cm maximum). Some breccia beds as much as 2 m thick are interbedded with massive welded tuff. Ranges in thickness from 275 to 335 m in western part of quadrangle to as little as 25 m in eastern part. Variation in thickness probably due to erosion as well as irregularities in deposition

Td2 **Glassy rocks, undivided**--Includes tuff, lapilli tuff, lithic ash-flow tuff, welded tuff, laminated vitrophyre, and vitrophyre breccia. Generally poorly exposed. Unit forms slopes of gray glassy sand that is derived from poorly consolidated tuff and easily weathered pumice, porous welded tuff, and perlite. Forms rare resistant black vitrophyre knobs and gray pinnacles as much as 5 m high of partly welded breccia. Breccia, comprising at least 50 percent of unit, contains 40 to 80 percent angular fragments of tuff, lithic ash-flow tuff, and vitrophyre 1 to 15 cm long (2 m maximum). Tuff breccia in southeast corner of quadrangle contains brown petrified wood. Celadonite is abundant locally. More densely welded in western part of quadrangle where two very densely laminated welded tuff zones are well developed. Laminated vitrophyre is usually light gray and black but also has local pink, red, yellow, and lavender laminae. Welded rocks have 1 to 35 percent feldspar phenocrysts as much as 3 mm long. Spherulites ranging from 0.1 mm to 4 cm across are locally abundant. Thick zones of perlitic alteration commonly contain abundant angular fragments of black obsidian as much as 2 cm across. Massive perlite that breaks into needles as much as 10 cm long is present in upper part of Auburn Creek and on the west side of Mill Creek. Unit is as much as 455 m thick in south-central part of quadrangle and a minimum of 12 m thick south of Rooster Rock Spring, where unit is interpreted to lie in depositional shadow zone of a hill of the Burnt River Schist. Locally includes:

Td2b **Upper welded tuff**--White and pale gray; 20 to 25 m thick

Td2a **Lower welded tuff**--White, pink, red, purple, lavender, and pale gray; 10 to 45 m thick

Td1 **Welded tuff**--Mostly white to light-gray laminated welded tuff. Shows other colors in bands parallel to laminae: black, purple, maroon, lavender, and yellow. Laminae usually planar but locally crenulated or contorted (concentric, similar, isoclinal, and disharmonic folds). Fold amplitudes range from 1 mm to 5 m. Contains 1 to 10 percent phenocrysts, as much as 1 mm long, consisting mostly of fractured plagioclase and also minor quartz, magnetite, biotite, amphibole, and olivine. Matrix consists of cryptocrystalline material and quartz and feldspar grains as much as 0.03 mm long. Spherulitic recrystallization is common. Less than 10 percent of unit is welded-tuff breccia in beds as much as 3 m thick parallel to lamination in surrounding welded tuff and in thicker bodies of unknown shape. Breccia contains 15 to 80 percent angular to subrounded fragments that are generally less than 4 cm across (1 m maximum) of laminated welded tuff, welded-tuff breccia, massive rhyolite, obsidian, and rarely, metachert. Fragments are light gray, yellow, maroon, green, and red. Matrix is welded tuff that contains as much as 50 percent plagioclase and quartz phenocrysts. Minor laminated perlitic light-gray and black vitrophyre also present. Porous silica- and zeolite-cemented breccia containing angular welded tuff fragments as much as 30 cm across is found at base of unit in southeast corner of quadrangle. Unit is commonly very fractured and stained by brown, yellow, and black oxides. Locally contains clear, yellow, green, and brown opal lenses and veins. Ranges in thickness from maximum of 275 m in central and western parts of quadrangle to 0 m in southeastern part where unit was eroded in places before unit Td2 was deposited

Tb1 **Basalt (early Miocene or Oligocene)**--Black porphyritic basalt that contains 20 to 30 percent phenocrysts, as long as 3 mm, consisting mostly of plagioclase laths and minor olivine. Locally glomeroporphyritic. Groundmass of plagioclase laths as much as 0.3 mm long and subophitic clinopyroxene. Original composition was 70 percent plagioclase, 15 percent olivine, and 15 percent clinopyroxene. Olivine is mostly altered to bowlingite, magnetite, and hematite. Maximum thickness of 50 m is exposed on east side of Mill Creek

TKc **Conglomerate (early Tertiary or Late Cretaceous)**-- Contains 50 percent angular to rounded clasts generally less than 5 mm across (2 cm maximum) of metachert, slate, and marble in matrix of mostly quartz silt, sericite, and minor carbonate, magnetite, hematite, and leucoxene. As much as 35 m thick above the Burnt River Schist on ridge between Stices Gulch and Cornet Creek. Age based on interpretation of unit as post-tectonic sediments deposited after Late Triassic or Jurassic deformation of the Burnt River Schist

TRd **Diorite (Triassic)**--Light-gray-green to dark-blue-gray, massive, fine- to medium-grained diorite. Plagioclase is saussuritized, and mafic minerals mostly altered to chlorite. Has poorly developed anastomosing and spaced cleavage in some outcrops. Exposed along lower part of Sutton Creek near the northeast corner of quadrangle. Tentatively assigned a Triassic age on basis of radiometric ages for similar rocks in region (Brooks and others, 1976; Walker, 1986)

Burnt River Schist (Triassic?)--Named by Gilluly (1937) for exposures in Burnt River Canyon 2 km east in French Gulch quadrangle and in Lost Basin quadrangle (fig.1). The Burnt River Schist is exposed in west-central, northeastern, and southeastern parts of quadrangle. Consists of following informal lithological members:

TRbs **Slate, argillite, metachert, and conglomerate**--Mostly dark-gray to black slate and argillite. Interbedded with metachert, ribbon chert, nodular chert, and quartzose schist. Contains minor shale-pebble conglomerate. Pebbles generally less than 2 cm across (6 cm maximum) and extremely flattened in plane of cleavage. Chlorite schist rare. Quartz veins and pods locally abundant; veins 1 cm to 1 m thick and pods as much as 3 m thick. Unit exposed in the west-central and southeastern parts of quadrangle

TRba **Meta-andesite**--Gray, green-gray, dark-blue-green, and green, fine-grained meta-andesite. Massive. Locally well cleaved. Has as much as 20 percent plagioclase phenocrysts (laths) as much as 2 mm long in groundmass of plagioclase and mafic minerals as much as 0.3 mm long. Plagioclase is altered to epidote. Primary hornblende is altered to biotite, chlorite, masses of very fine amphibole needles, and hematite. Total mafic mineral content is 25 percent. Exposed mostly in southeast corner of quadrangle

TRbt **Metatuff**--Fine-grained, gray-green and green, andesitic metatuff. Bedding generally poorly preserved. Usually fractured but locally has well-developed anastomosing cleavage. Contains andesitic lapilli as much as 2 cm long, pelitic siltstone, and carbonate lenses interbedded with tuff, which suggest that unit is of submarine origin. Recrystallization and neomineralization (metamorphic development of epidote, sphene, chlorite, biotite, and amphibole) has obscured primary textures and structures. Exposed in northeastern and southeastern parts of quadrangle

TRbm **Marble**--Fine-grained, dark-to medium-gray and blue-gray marble. Bedding ranging from 0.5 to 15 cm thick locally preserved. Commonly crudely cleaved. Has white calcite veins. Exposed as isolated lenses in slate and metachert in west-central part of quadrangle and is associated with meta-andesite and serpentinite in southeastern part of quadrangle

TRbsp **Serpentinite**--Lens of green brecciated serpentinite on east side of Auburn Creek. Contains fragments of light-green asbestos and quartz. Also present in shear zones exposed in tunnel and prospect pits in the Burnt River Schist in southeastern part of quadrangle. Some bodies contain talc and amethyst

Contact

Faults--Dotted where concealed. In cross section, arrows show direction of relative movement; where two directions of movement are indicated, older movement is labeled "1"

High angle--Bar and ball on downthrown side; where two directions of movement are indicated, older movement is labeled "1"

Thrust--Sawteeth on upper plate

Strike and dip of slaty cleavage
Inclined
Vertical

Strike and dip of foliation
Inclined
Vertical

Trend and plunge of lineation on cleavage or long axis of cleavage mullions--May be combined with other symbols
Inclined
Horizontal
Quarry dump

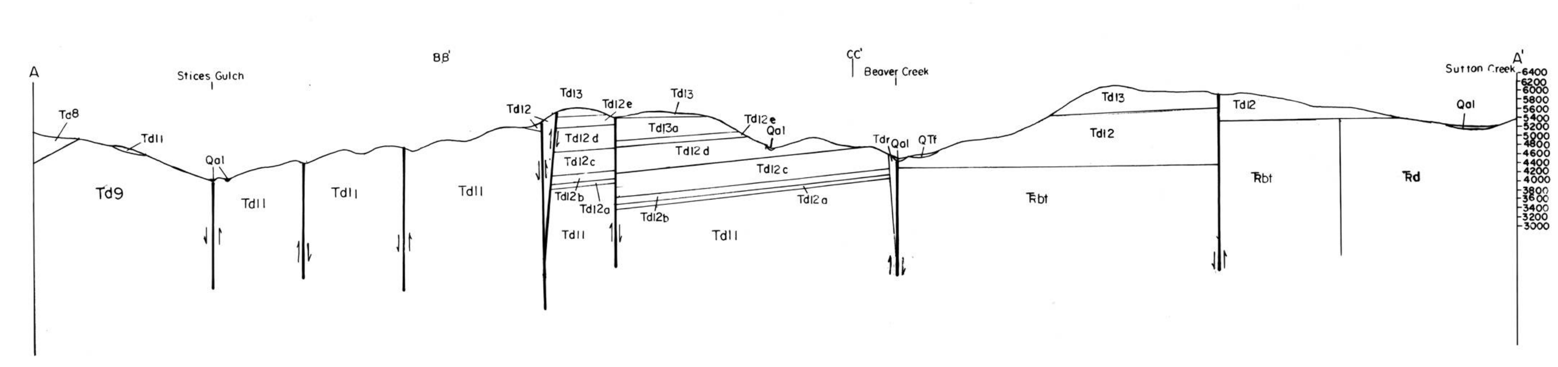

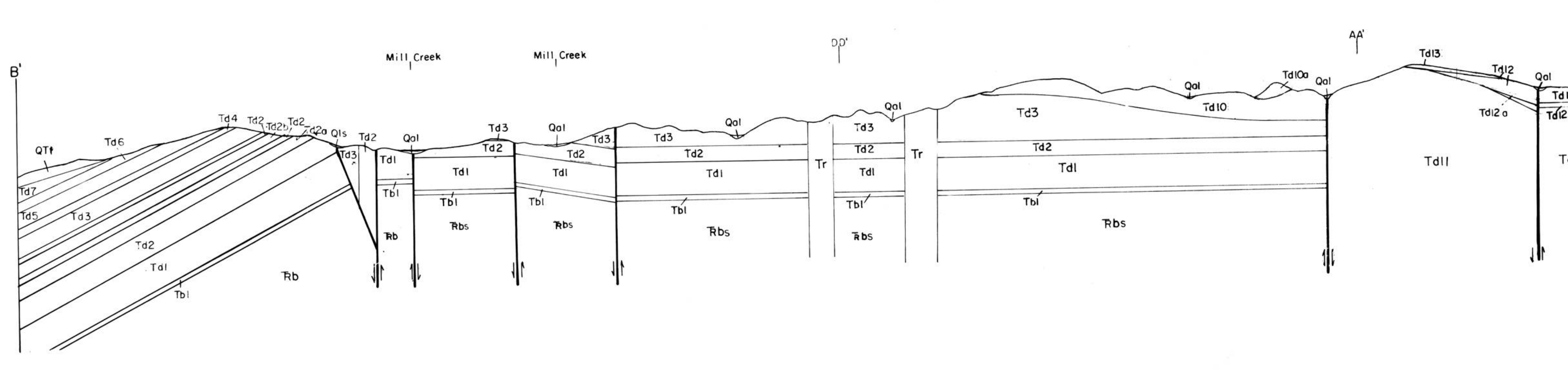

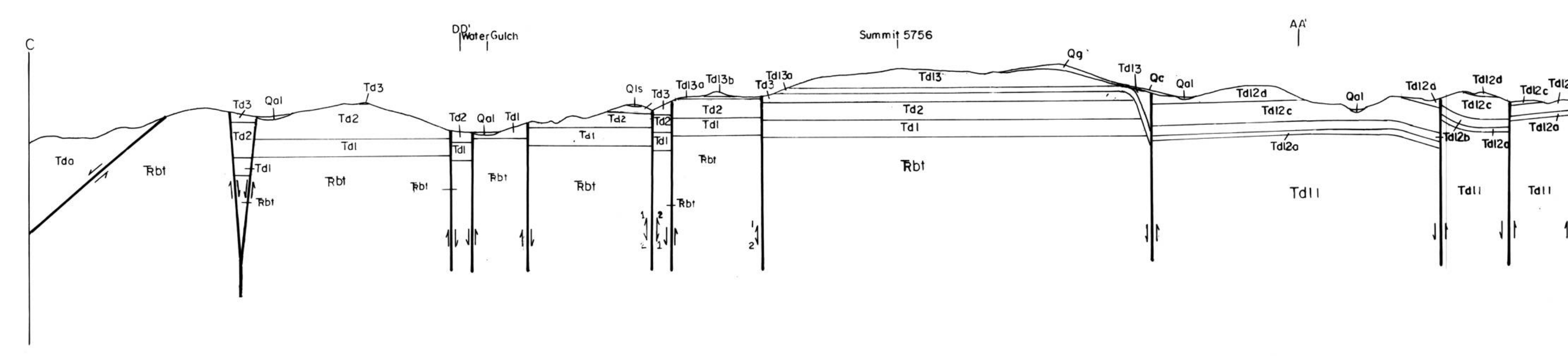

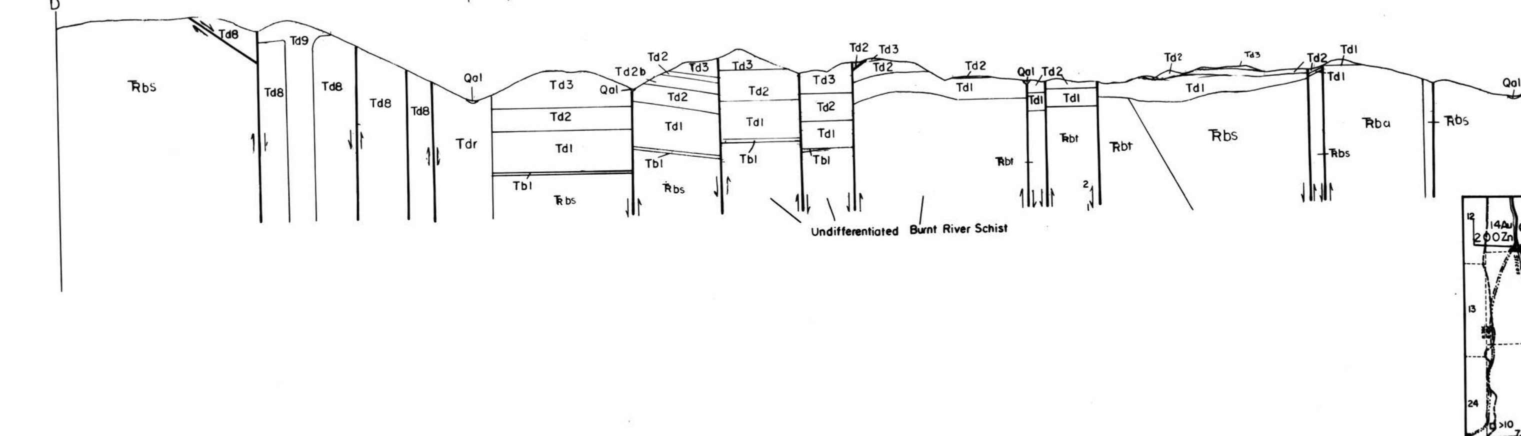

DISCUSSION

INTRODUCTION

The Dooley Mountain 7 1/2' quadrangle is located 18 km south of Baker, Oregon (fig. 1). Principal access is by Oregon Highway 7 south from Baker to Oregon Highway 245, which connects the Powder River and Burnt River valleys by way of Dooley Summit. Numerous dirt roads provide access to all the major canyons in the quadrangle and to many of the ridge tops and flanks. Roadcuts provide excellent exposures of the Miocene volcanic rocks that are usually covered by thick regolith and forest.

The quadrangle was mapped at the scale of 1:125,000 as part of the Baker 30' quadrangle (Gilluly, 1937), at the scale of 1:250,000 as part of the Baker 1° by 2° quadrangle (Brooks and others, 1976), and at the scale of 1:500,000 as part of a geologic map of eastern Oregon (Walker, 1977). The present study is a cooperative project between the U.S. Geological Survey and the Oregon Department of Geology and Mineral Industries.

The principal geologic interest in the quadrangle is a lower? and middle Miocene volcanic assemblage that consists of a thick section of rhyolitic welded tuff, a fissure-vent filled with rhyolitic pyroclastic breccia, a rectangular vent filled with basalt-rhyolite breccia, flows, and dikes, and two rhyolite domes and related flows. These rocks were named the Dooley Rhyolite Breccia by Gilluly (1937). Because that name inadequately reflects the wide range of lithology present in the unit, it is here redefined as the Dooley Volcanics.

The Dooley Volcanics was deposited on a basement of lower and middle Tertiary basalt, Triassic diorite, and Triassic sedimentary and volcanic rocks. The distribution of the Dooley Volcanics was complicated by faulting, tilting and erosion that occurred between the volcanic eruptions. The relation, if any, between the volcanic vents within the quadrangle and the vents that supplied the thick section of pyroclastic rocks is not known.

GEOLOGY

The oldest rock unit of the quadrangle is the Burnt River Schist, which was named by Gilluly (1937). These rocks comprise a part of the Baker terrane (Silberling and others, 1987). The Baker terrane consists of pieces of oceanic and island arc crust and overlying sedimentary and volcanic rock that have been greatly deformed before and during the Mesozoic when the terrane was accreted to western North America (Brooks and others, 1976; Vallier and others, 1977; Brooks and Vallier, 1978; Dickinson and Thayer, 1978; Brooks, 1979). Mullen (1985) concluded that a forearc setting is most consistent with the chemistry and petrography of the mafic metavolcanic rocks from the Baker terrane.

In the quadrangle, the rock types present in the Burnt River Schist, in order of abundance, are slate, metachert, argillite, andesitic metatuff, meta-andesite, shale-pebble conglomerate, marble, and serpentinite. The sedimentary and volcanic rocks probably represent many hundreds of meters of stratigraphic section, but they are too deformed and the outcrops too scattered to determine an approximate stratigraphic thickness. A clue to what the magnitude of the section may be is in the southeastern part of the quadrangle where the metatuff dips 60° west, and the minimum exposed thickness of unfaulted metatuff is 700 m.

A Triassic(?) age for the Burnt River Schist is based on Late Triassic pentacrinids found in a block of marble in the French Gulch quadrangle (Brooks, and others, 1976) adjacent to the Dooley Mountain quadrangle on the east, Middle to Late Triassic conodonts from the Nelson Marble of Prostka (1967) at Durkee (fig. 1; Morris and Wardlow, 1986), Early Triassic(?) conodonts from the Nelson Marble of Prostka (1967), which is enclosed by the Burnt River Schist near Durkee (Mullen and Sarewitz, 1983) and radiometrically dated Middle Triassic metamorphosed plutonic rocks intruding the Burnt River Schist, about 10 km east of the quadrangle (Walker, 1986).

There is no evidence in the Dooley Mountain quadrangle to indicate whether or not the Burnt River Schist was intruded by diorite (TRd), because the contact of the diorite and Burnt River Schist is covered by Tertiary rocks. However, judging from regional relations shown by Brooks and others (1976), the diorite in the Dooley Mountain quadrangle is assumed to intrude the Burnt River Schist. Later, during the Late Cretaceous or early Tertiary, the Burnt River Schist supplied sediments to conglomerate that rests on the slate and metachert in the west-central part of the quadrangle.

Olivine basalt was deposited on the Burnt River Schist in the southern part of the quadrangle. The age of the flows is not known but may be Oligocene or Early Miocene because the flows underlie the early(?) and middle Miocene Dooley Volcanics.

The Dooley Volcanics consists of about 2,400 m of rhyolitic welded tuff, tuff, vitrophyre, and coarse lithic ash-flow tuff, in addition to vent breccia and two rhyolite domes and related flows. The thickest section of the Dooley Volcanics is found in the Dooley Mountain quadrangle.

In the field, the principal characteristic used to distinguish units Td1 through Td7, Td10, Td10a, and Td12a through Td12g, is whether or not the map units are densely welded and, thus, resistant to weathering. The altered glassy, or loosely consolidated tuff and breccia readily break down to form slopes of gray glassy sand devoid of outcrops. Units of similar lithology are typically indistinguishable from one another, especially the very fine grained, laminated welded tuffs and the laminated and massive vitrophyres. The chief distinguishing feature of the numbered units is their position in the stratigraphic sequence. The determination of stratigraphic position was made on a ridge-by-ridge basis from the field mapping of the unassigned lithological units. Correlation of units between the ridges was made by matching the lithologies, sequence of rock types, and relative thicknesses of the field units. Allowances were made for relatively minor stratigraphic differences. In this way, the total number of units was determined, and the units were extended across the quadrangle. The contacts between numbered units may be erosional unconformities (for example, the contact between units Td1 and Td2), or may reflect weathering characteristics related to alterations, such as perlitization, or the degree of welding. The contacts may coincide with cooling-unit boundaries (for example, the contact between units Td3 and Td4), or may mark the change from altered or unaltered vitrophyre to densely welded and recrystallized tuff (for example, the contact between units Td2 and Td3). Some of the numbered units mapped may include several cooling units, especially the thicker members like Td2 and Td3. These crudely defined units can be used to delineate the local structure and are probably much more useful in this way than for regional correlation.

The lowermost 1,555 m of welded tuff are mostly in the south half of the quadrangle. This part of the section is divided into seven numbered units, one of which, unit Td2, is divided into locally mappable units, Td2a and Td2b. Thicknesses of units Td1 through Td7 vary widely across the quadrangle, as might be expected of ash flows that sweep across a rough surface and are subject to subsequent erosion. These seven units of the Dooley Volcanics are exceptionally well preserved in the Dooley Mountain area possibly because the welded tuffs filled a small basin or a paleovalley. However, hills as high as 100 m, such as the one south of Rooster Rock Spring, were present in the basin. Erosion and, possibly, faulting between eruptions counteracted the tendency of the numerous ash flows to fill in the topographic depressions. Units Td4 and Td7 are not widely preserved due to uplift and erosion following deposition of unit Td7.

Unit Td1 on the west side of Cornet Creek is cut by glassy dikes that most likely represent remobilized material from an exceptionally hot zone lower in the member. It is not clear whether or not remelting occurred, or the hot glass flowed. This evidence suggests that much of this part of unit Td1 comprises one cooling unit that is more than 120 m thick.

After deposition of unit Td7, the north half of the quadrangle was uplifted enough so that units Td1 through Td7 were largely eroded from the Burnt River Schist of the northern (footwall) block. (Was this faulting related to cauldron subsidence?) A small remnant of this part of the welded tuff section may be preserved in the northwest corner of the quadrangle (Tdt?).

After block faulting, a north-trending fissure approximately 1 by 5 km opened in the western part of the quadrangle (fig. 2) and erupted pyroclastic breccia, some of which is preserved in unit Td8. Much of unit Td8 is interpreted as a vent breccia. Later, the fissure erupted rhyolite (Td9), which formed a dome and fed flows such as the ones along the southwest edge of the quadrangle. Thick rhyolite dikes (Tdr) in the vicinity of the rhyolite dome may be feeders of these rhyolite flows.

Following more erosion, welded tuff was again deposited across the erosionally truncated edges of units Td1 through Td9. The newly deposited unit, Td10, contains several cooling units, which could not be mapped in detail due to poor exposure. However, glassy rocks that form the lower part of the cooling units (Td10a) are locally mappable. Unit Td10 was probably widespread but has been eroded from most of the southern half of the quadrangle.

A basalt-rhyolite volcanic center subsequently formed adjacent to the north end of the fissure-vent. The basalt-rhyolite vent is now mostly buried beneath younger volcanic rocks. Judging from exposed parts of the breccia in the adjacent Bowen Valley quadrangle to the north (Brooks and McIntyre, 1978), the 5 by 8 km vent was roughly rectangular, and north trending. The east boundary may be just west of Beaver Creek where a fault exposes basement of metatuff below the younger overlying welded tuff. The west wall of the vent coincides with the north-striking fault along Stices Gulch, but this wall is west of Stices Gulch in the Bowen Valley quadrangle.

The vent fill (Td11) consists of mostly medium to coarse basalt and rhyolite pyroclastic breccia, air-fall tuff, and numerous dikes and flows of basalt and rhyolite. One small rhyolite dome (or laccolith?) was observed along Oregon Highway 245, 2 km north of Dooley Summit. Small deposits ofwelded lithic ash-flow tuff erupted from the vent are preserved on older rocks (Td9, and Td10) nearby.

Rocks adjacent to the fissure-vent and the basalt-rhyolite vent commonly have undergone argillic alteration. Plagioclase is sericitized, the rocks are silicified, and primary mafic minerals are altered to iron oxide. Some rocks contain traces of epidote and sulfide minerals. Some rocks in and near the basalt-rhyolite vent (units Td11 and Td10, respectively) contain garnet porphyroblasts. Poikiloblasts of feldspar occur in alaskite dikes and basalt in the vent fill.

The basalt-rhyolite vent could be an isolated product of crustal melting, or possibly peripherally related to the magma chamber that erupted the welded tuffs in the quadrangle (Hildreth, 1981). The proximity of the vent to the voluminous pyroclastic deposits, including coarse breccia, may not be fortuitous and is consistent with the vent developing on the outer edge of a large magma chamber. This hypothesis would link the volcanism in the quadrangle with the source of the pyroclastic rocks, but this hypothesis cannot be proven with existing data.

After another period of erosion, more welded tuff (Td12) was deposited across most of the basalt-rhyolite vent and may have formed its greatest thickness in a broad, generally north-trending paleovalley parallel to Beaver Creek, but with its depo-axis a few kilometers west of Beaver Creek. Another paleovalley, also generally north-trending, subparallel to West Fork Sutton Creek, was also filled by unit Td12. It is not clear whether or not unit Td12 was deposited across the southern part of the quadrangle, or was eroded off.

The laminated welded tuffs in units Td1 through Td7, Td10, and Td12 are very similar and are chiefly distinguished by their stratigraphic position. They contain 0 to 15 percent phenocrysts, mostly twinned and zoned euhedral to anhedral plagioclase that is usually highly fractured and less than 1 to as much as 5 mm long. A few phenocrysts of quartz and altered mafic minerals are present. The quartz is commonly rounded and deeply embayed by the matrix. The mafic minerals are usually altered to hematite, magnetite, chlorite, biotite and bowlingite. Olivine and pyroxene are present in minor amounts in all ash-flow units. Minor biotite and amphibole phenocrysts are also present in unit Td1. Total mafic mineral content is 1 to 5 percent.

Laminae are defined in hand specimens by millimeter-thick alternating light and dark layers, or layers of different colors (for example, white and pink). In thin section, these layers are sharply defined alternating phenocryst-rich and phenocryst-poor layers showing varying degrees of recrystallization to spherulites. In many rocks the recrystallization is so intense that, under a microscope, the primary textures and structures are obscured or obliterated. Where the matrix is unrecrystallized, it is commonly very fine grained quartz and feldspar and cryptocrystalline material. Irregular or millimeter-sized pore spaces are occupied by tridymite and quartz. Matrix grains surrounding filled pores and unfilled cavities are two or three times larger than the rest of the matrix. Glassy zones in the welded tuff have undergone spherulitic recrystallization and perlitization and have become birefringent. Some of the glassy zones, even partly devitrified ones, have microlites and trichites.

Reef (1983) analyzed 17 samples of welded tuff that he mapped as part of the Dooley Volcanics in the Unity Reservoir area, 20 km west of the quadrangle. He found that the SiO_2 content of the welded tuffs varied from about 70 to 83 percent. Thirteen of the welded tuffs had silica compositions more than 77 percent and are presumed to be altered. No consistent chemical trends would be expected in these rocks, and none were found. The four samples that have a silica content of less than 77 percent are peraluminous. Reef concluded that either the ash flows were not erupted from zoned magma chambers, that the magma chamber was recharged between eruptions, or that more than one chamber discharged the ash flows.

The final volcanic event preserved in the Dooley Volcanics is extrusion of the rhyolite dome and related flows that cap part of Dooley Mountain, Beaver Mountain, and Bald Ridge. A lobe extends southward across the truncated section of early pyroclastic rocks and northward, filling part of a paleovalley on the east side of Beaver Creek. The rhyolite has a basal vitrophyre of varying thickness that is locally absent. In places the vitrophyre is brecciated. One possible vent is a rhyolite dike (Tdr) on the west side of Beaver Creek, possibly emplaced along the concealed east margin of the basalt-rhyolite vent. Another vent is postulated beneath glacial deposits at the head of Beaver Creek (see cross section C-C'). Other vents may be concealed beneath the rhyolite.

The rhyolite dome (Td13) is the part of the Dooley Volcanics dated by Walker and others (1974) as 14.7±0.4 Ma (recalculated using constants of Dalrymple, 1979), or middle Miocene. The eventful volcanic history outlined above for the Dooley Volcanics, however, suggests that the earliest included tuff (Td1) may be substantially older than the rhyolite dome (Td13), possibly by as much as several million years. Other volcanic centers elsewhere in the western United States have had phases of large-volume ash-flow volcanism that lasted for 2 to 5 m.y. (Bruneau-Jarbidge eruptive center, Idaho, 2 m.y., Bonnichsen, 1982; McDermitt Caldera complex, Nevada-Oregon, 3 m.y., Rytuba and Conrad, 1981; San Juan Mountains, Colorado, 4 m.y., Lipman and others, 1970; Thunder Mountain field, Idaho, 4 m.y., Leonard and Marvin, 1982; Magic Reservoir area, Snake River Plain, Idaho, 5 m.y., Leeman, 1982). Therefore, it is possible that the oldest part of the Dooley Volcanics (Td1) could be as old as late early Miocene. In this report, the Dooley Volcanics is tentatively assigned an early(?) and middle Miocene age.

The question of how quickly the 2,400 m of welded tuff accumulated is not resolvable with existing data. Some evidence suggests that parts of the section may have accumulated quickly. The glassy dikes in Td1, described above, suggest that some cooling units may have been more than 120 m thick. Also, no paleosols were recognized. It is not clear, however, whether or not the time between eruptions was insufficient for development of paleosols, or paleosols were destroyed by scouring at the base of ash flows or from the heat of welding. Paleosols were probably developed, at least locally and sporadically, because petrified wood was found in unit Td2. If the eruptions were frequent and many of the cooling units were very thick, the welded tuffs could have accumulated in a relatively short time.

The cumulative duration of volcanic quiescence and erosion may well have comprised a significant fraction of the time between deposition of units Td1 and Td13, especially the periods between deposition of unit Td7 and emplacement of unit Td8, between emplacement of unit Td9 and deposition of unit Td10, between emplacement of unit Td11 and deposition of unit Td12, and between deposition of units Td12 and Td13.

The vent source or sources of the 2,400 m of welded tuff, tuff and pyroclastic breccias of the Dooley Volcanics are not known. Circumstantial evidence suggests that the vent or vents are nearby and probably lie southwest or west of the quadrangle. Areas to the northwest, north, east, and south have Paleozoic and (or) Mesozoic basement rocks covered, at most, by relatively thin Tertiary formations (Brown and Thayer, 1966; Brooks and others, 1976). Areas to the southwest and west, however, are underlain by thick Tertiary volcanics that could be in part related to the Dooley Volcanics, or they could be covering Miocene vents. The coarse pyroclastic breccias, containing lithic fragments as large as 2 m across, suggest that the vent (or vents) was not far.

Other evidence suggests western or southwestern sources for the ash flows. Units Td1 through Td7 generally thin to the east. The degree of welding is more intense to the west. The stratigraphic thinning of unit Td2 northeast of the hill underlain by the Burnt River Schist south of Rooster Rock Spring would be consistent with ash flows coming from the southwest and thinning in the lee of the hill. Shallow crenulations and grooves, possibly flow induced like the ones described by Schmincke and Swanson (1967) and Chapin and Lowell (1979), are most abundant on laminae in unit Td3. These lineations trend mostly north-northeast.

The welded tuffs are much alike physically and mineralogically, suggesting an origin from a single magma chamber that was repeatedly recharged.

Andesite dikes intrude the lower part of the Dooley Volcanics (unit Td2) and may be younger than part of the Dooley Volcanics.

Basalt overlies the uppermost welded tuff unit (Td12) in the northwest corner of the quadrangle and may also be younger than the rhyolite dome (Td13). The basalt is contiguous with the more widespread basalt flows in the adjacent Bowen Valley quadrangle (fig. 1; Brooks and McIntyre, 1978), which were assigned a Miocene age on the basis of plant fossils in the interbeds and their lithologic similarity to basalt flows of the Columbia River Group. Basalt flows in the southwest corner of the quadrangle are similar to the basalt flows in the northwest corner and are tentatively correlated with them.

Tuff and lacustrine sedimentary rocks are found in the southwest and southeast corners, respectively. The tuff lies on Miocene basalt. The base of the sedimentary rocks is not exposed, but the underlying unit is probably of the Dooley Volcanics. The tuff and sedimentary rocks are lithologically similar to rocks of the Idaho Group mapped by Lowry (1968) in the adjacent Ironside Mountain 30' quadrangle to the southwest (fig. 1). Lowry (1968) cites vertebrate and plant fossils in support of an early and middle Pliocene age for the Idaho Group. This age is tentatively accepted for the tuff and lacustrine sedimentary rocks in the Dooley Mountain quadrangle.

Fanglomerate containing clasts mostly of rhyolitic lithologies was deposited on the northern and southern flanks of Dooley Mountain in the Pliocene and Pleistocene and has been subsequently dissected. These deposits were much more extensive than they are at present.

Colluvium, landslide deposits, and alluvium were formed in the Pleistocene and Holocene.

STRUCTURE

The Burnt River Schist is exposed in two main blocks separated by the overlying Dooley Volcanics; one block is in the west-central part of the quadrangle, and the other one is in the southeastern part. The internal structure in the blocks is slightly different from one another. In the west-central block, the slate commonly has two intersecting cleavages, one of which is better developed than the other. Angles between pairs of cleavages varies from 20° to 90°. Although clusters of poles occur on an orientation diagram, the dominant and subordinate cleavages are not separable into discrete groups on the basis of orientation and degree of development. Poles of slaty cleavages lie along a great circle that is approximately perpendicular to cleavage mullions and crenulations on the cleavage. These linear structural elements plunge at low to moderate angles west-southwest. The slate is cut by irregularly spaced fracture cleavages that are oriented at large angles to the cleavage mullions and crenulations.

In the southeast block, one slaty cleavage is developed in most outcrops. These cleavages dip moderately to steeply southward and correspond with one of the groups of poles of slaty cleavage in the west-central block. West-southwest-plunging cleavage mullions and crenulations are present, but they do not form a dominant group of linear elements. Other folds plunge south, southeast, and northeast. Spaced fracture cleavages at large angles to west-southwest-plunging cleavage mullions are poorly developed.

The internal geometry of the Burnt River Schist, described above, was developed during Mesozoic subduction-related processes under conditions of the lower greenschist facies. Ashley (1966) studied the mesoscopic structure of the Burnt River Schist in detail to the east in the French Gulch and Lost Basin quadrangles (fig. 1).

Tertiary tectonics in the quadrangle mostly involved vertical movements, including opposite slip inferred at different times along some faults. Vertical separation of more than 2,000 m occurred along a northeast-striking normal fault across the middle of the quadrangle sometime in the early or middle Miocene. Part of the fault along which the separation occured may be preserved along the west edge of the quadrangle in the upper part of Cornet Creek (sec. 1, T. 12 S., R. 39 E.). To the east, the fault has been displaced along younger faults and buried beneath younger pyroclastic deposits and a rhyolite dome. The upthrown northern block probably changed local drainage patterns significantly and may have established the drainage divide that now separates the Powder River and Burnt River valleys.

Later in the Miocene the predominant strain was east-west extension when the fissure occupied by units Td8 and Td9 (of the Dooley Volcanics) formed. Local extension of 1 km developed in the western part of the quadrangle.

The basalt-rhyolite breccia complex erupted at the north end of the older fissure-vent. After piercing the carapace of the Burnt River Schist, the volcanic center probably initially erupted slate and metachert along with the basalt and rhyolite debris. Much of the space for the vent, however, may have been made by shouldering aside several cubic kilometers of the Burnt River Schist. Because of the approximately rectangular shape of the vent, local strain was probably complicated, although it included a large east-west component of extension.

Since the Miocene, the Dooley Mountain block was uplifted, resulting in tilting of the fanglomerate on the south edge of the quadrangle by as much as 15° and by tilting of the basalt on the north edge by 5° to 20°. The uplift may have involved broad arching of the volcanic rocks, because the welded tuff on the north and south dip away from the crest of the range.

GEOCHEMICAL STUDIES

The following discussion of geochemical studies is a synopsis of a report published by Evans (1989). Anomalous amounts of gold (anomalous in comparison to crustal abundance of about 3 parts per billion (ppb); Simons and Prinz, 1973) were found in 10 of the 33 panned-concentrate samples and five of 37 stream-sediment samples. The gold concentrations of the analyzed samples ranged from 6.4 to 2,600 parts per million (ppm) in panned concentrates and from 0.05 to 0.4 ppm in stream sediments, a sample medium in which detectable amounts of gold are unusual at a lower limit of detection of 0.05 ppm. The drainage areas of the streams containing gold (fig. 2) underlie much of the quadrangle. It is possible that even more of the quadrangle contains anomalous concentrations of gold. Due to the low concentrations of nonmagnetic heavy minerals in the stream sediments, the presence of gold in some drainages cannot be adequately determined by panning only two pan loads of stream sediment, as was done in the geochemical study (Evans, 1989). The low sample weights of the nonmagnetic heavy-mineral fractions obtained (Evans, 1989, table 5) resulted in high and variable lower limits of detection for gold. The area of anomalous gold (fig. 2) was based on detectable concentrations of gold in stream sediments and panned concentrates and is a minimum prospective area. This area of anomalous gold may be much larger than the source areas, which may consist of a few scattered mineralized zones.

The area of anomalous gold extends into the adjacent Brannan Gulch quadrangle to the west as indicated by the high gold concentrations from panned concentrates from part of the upper part of Stices Gulch (fig. 1; 6.4, 22, and 2,600 ppm). The geology of the drainage containing the sample that has 2,600 ppm gold suggests that gold mineralization is along a fault between the early(?) and middle Miocene Dooley Volcanics and the Triassic(?) Burnt River Schist. Gold mineralization also occurs in the Burnt River Schist, but no bedrock sources were identified.

The nonmagnetic heavy-mineral fractions analyzed were highly concentrated residues of the stream sediments. Therefore, the analytical concentrations of gold do not directly reflect the amount or richness of gold-mineralized rock in the drainages. The concentrations of gold in these analyzed samples may reflect the so-called nugget effect, which occurs if relatively few grains of gold account for most of the gold in a large volume of material. If this is the case in a drainage, most samples removed from the stream bed will show no gold, but the few samples that capture the scarce gold grains will show relatively large amounts of gold. Also, some of the gold may be associated with mafic or sulfide minerals in the samples. If the gold grain size is small enough, some gold may have been lost during panning.

Thirteen of the rock samples in the gold anomaly had gold concentrations ranging from 0.05 to 1.75 ppm (Evans, 1989, 278 rock samples analyzed). Eight of these samples, containing gold concentrations covering this range of values, were located near the 1 by 5 km fissure-vent occupied by rhyolitic pyroclastic breccia and rhyolite (fig. 2). Two of these samples also contained silver concentrations of 1.5 and 2 ppm (not shown on fig. 2). One of the samples containing 1.3 ppm gold was taken near the collar of an exploration drill hole made by Freeport Corp. This sample also had 2,000 ppm arsenic, 150 ppm antimony, 200 ppm lead, and 1,000 ppm zinc. Other rock samples in and near the vent were anomalous in arsenic (1,500 ppm maximum), antimony (3,000 ppm maximum; not shown on fig. 2), and mercury (1 to greater than 10 ppm). The rocks containing anomalous amounts of mercury tended to occur farther from the fissure-vent than the other elements mentioned above; this distribution suggested element zonation around the vent.

The gold anomalies along Water Gulch, the upper part of Auburn Creek, and Sutton Creek were not associated with anomalous concentrations of other elements. The rocks in all three anomalies are intensely faulted, although the major faults themselves are poorly exposed. These faults may have served as pathways for mineralizing epithermal solutions, but it is not clear whether the faults themselves or the adjacent Dooley Volcanics are mineralized. In addition, the upper part of Auburn Creek and the Sutton Creek area are near the probable vent that fed the uppermost rhyolite flow and dome unit of the Dooley Volcanics. An epithermal system related to that vent may have resulted in localized gold mineralization.

Four occurrences of gold (0.25 to 1.1 ppm) in quartz veins in the Burnt River Schist in the southeastern part of the quadrangle were associated with 0.4 ppm gold in stream sediments in the lower part of Auburn Creek (fig. 2). Three of these rock samples also contained silver (0.5 to 1.5 ppm). One of the samples contained 500 ppm zinc. The gold occurrences were at prospects along a part of the lower part of Auburn Creek that has been placered.

Minor amounts of gold were found in talc (0.1 ppm) and serpentinite (0.2 ppm) east of Juniper Hill Spring in the southeastern part of the quadrangle (fig. 2). Both samples were taken from shallow workings in which the ultramafic rocks are hosted by the Burnt River Schist. Sheared talc and the serpentinite that is common in the area near these samples suggested the possibility of more widespread low-gold concentrations. However, these gold occurrences were not associated with anomalous concentrations of gold in stream-sediment and panned-concentrate samples collected downstream.

Much of the gold anomaly in Stices Gulch, East Fork Cornet Creek, and the upper part of Mill Creek coincided with part of a zinc anomaly defined by concentrations of zinc in stream-sediment samples greater than or equal to the 200 ppm detection limit. A part of the upper part of Mill Creek contained a silver anomaly defined by silver concentrations greater than or equal to the 0.5 ppm detection limit in stream sediments.

Commercially exploited perlite is located in the upper part of Auburn Creek (NE1/4, sec. 2, T. 12 S., R. 40 E.) on the east edge of the central part of the main gold anomaly.

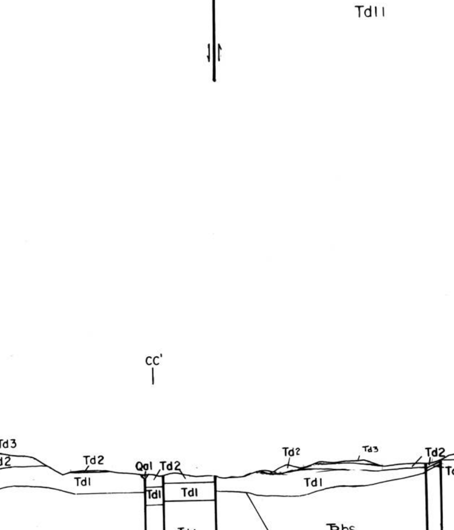

Figure 1. Index map showing locations of selected quadrangles. Quadrangles are 7 1/2' quadrangles unless otherwise noted.

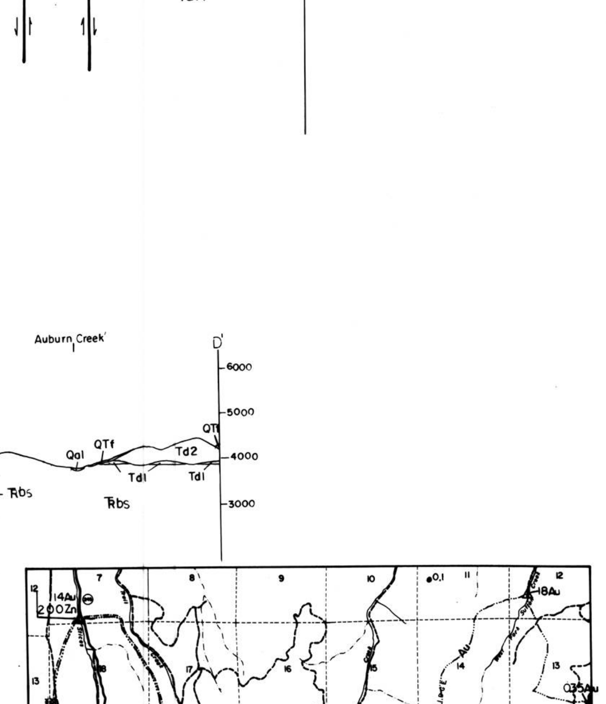

Figure2. Map of Dooley Mountain quadrangle showing locations of fissure-vent, anomalous areas (gold, silver, zinc), and stream-sediment, panned-concentrate, and rock samples containing anomalous concentrations of gold, silver, arsenic, and mercury.

EXPLANATION

Paved roads
Dirt roads

Boundary of anomaly
Gold
Silver
Zinc

Stream-sediment and panned concentrate samples containing anomalous concentrations of gold (Au), silver (Ag), or zinc (Zn)--In parts per million
Panned concentrate
Stream sediment
Stream sediment and panned concentrate

Rock samples containing anomalous concentrations of gold, silver, arsenic or mercury--In parts per million
Gold
Silver
Arsenic
Mercury

REFERENCES

Ashley, R.P., 1966, Metamorphic petrology of the Burnt River Canyon area, northeastern Oregon: Stanford, Calif., Stanford University, Ph.D. dissertation, 193 p.
Bonnichsen, Bill, 1982, The Bruneau-Jarbidge eruptive center, southwestern Idaho, in Bonnichsen, Bill and Breckenridge, R.M., eds., Cenozoic geology of Idaho: Idaho Bureau of Mines and Geology Bulletin 26, p. 237-254.
Brooks, H.C., 1979, Plate tectonics and the geologic history of the Blue Mountains: Oregon Geology, v. 41, no. 5, p. 71-80.
Brooks, H.C. and McIntyre, J.R., 1978, Preliminary geologic map of the Bowen Valley quadrangle: Oregon Department of Geology and Mineral Industries Open-File Map O-78-03, scale 1:24,000.
Brooks, H.C., McIntyre, J.R., and Walker, G.W., 1976, Geology of the Oregon part of the Baker 1° by 2° quadrangle: Oregon Department of Geology and Mineral Industries, Map GMS-7, scale 1:250,000.
Brooks, H.C. and Vallier, T.L., 1978, Mesozoic rocks and tectonic evolution of eastern Oregon and western Idaho, in Howell, D.V. and McDougall, K.A., eds., Mesozoic paleogeography of the Western United States: Society of Economic Paleontologists and Mineralogists, Pacific Section, Pacific Coast Paleogeography Symposium 2, p. 133-146.
Brown, C.E. and Thayer, T.P., 1966, Geologic map of the Canyon City quadrangle, northeastern Oregon: U.S. Geological Survey Miscellaneous Geologic Investigations Map I-447, scale 1:250,000.
Chapin, C.E., and Lowell, G.R., 1979, Primary and secondary flow structures in ash-flow tuffs of the Gribbles Run paleovalley, central Colorado, in Chapin, C.E., and Elston, W.E., eds., Ash-flow tuffs: Geological Society of America Special Paper 180, p. 137-154.
Dalrymple, G.B., 1979, Critical tables for conversion of K-Ar ages from old to new constants: Geology, v. 7, no. 11, p. 558-560.
Dickinson, W.R. and Thayer, T.P., 1978, Paleogeographic and paleotectonic implications of Mesozoic stratigraphy and structure in the John Day inlier of central Oregon, in Howell, D.G. and McDougall, K.A., eds., Mesozoic paleogeography of the Western United States: Society of Economic Paleontologists and Mineralogists, Pacific Section, Pacific Coast Paleogeography Symposium 2, p. 147-161.
Evans, J.G., 1989, Analytical results for stream sediments, panned concentrates from stream sediments, and rocks samples from the Dooley Mountain quadrangle, Baker County, Oregon: U.S. Geological Survey Open-File Report 89-354, 38 p.
Gilluly, James, 1937, Geology and mineral resources of the Baker quadrangle, Oregon: U.S. Geological Survey Bulletin 879, 109 p.
Hildreth, Wes, 1981, Gradients in silicic magma chambers; implications for lithospheric magmatism: Journal of Geophysical Research, v. 86, no. B11, p. 10153-10192.
Leeman, W.P., 1982, Geology of the Magic Reservoir area, Snake River Plain, Idaho, in Bonnichsen, Bill and Breckenridge, R.M., eds., Cenozoic geology of Idaho, Idaho Bureau of Mines and Geology Bulletin 26, p. 369-376.
Leonard, B.F. and Marvin, R.F., 1982, Temporal evolution of the Thunder Mountain Caldera and related features, central Idaho, in Bonnichsen, Bill and Breckenridge, R.M., eds., Cenozoic geology of Idaho: Idaho Bureau of Mines and Geology Bulletin 26, p. 23-41.
Lipman, P.W., Steven, T.A., and Mehnert, H.H., 1970, Volcanic history of the San Juan Mountains, Colorado, as indicated by potassium-argon dating: Geological Society of America Bulletin, v. 81, no. 8, p. 2329-2352.
Lowry, W.D., 1968, Geology of the Ironside Mountain Quadrangle, Oregon: Oregon Department of Geology and Mineral Industries Open-File Report, scale 1:125,000, 79 p.
Morris, E.M. and Wardlaw, B.R., 1986, Conodont ages for limestones of eastern Oregon and their implication for pre-Tertiary melange terranes: U.S. Geological Survey Professional Paper 1435, p. 59-63.
Mullen, E.D., 1985, Petrologic character of Permian and Triassic greenstones from the Melange terrane of eastern Oregon and their implications for terrane origin: Geology, v. 13, no. 2, p. 131-134.
Mullen, E.D. and Sarewitz, Daniel, 1983, Paleozoic and Triassic terranes of the Blue Mountains, northeast Oregon: discussion and field trip guide, Part 1. A new consideration of old problems: Oregon Geology, v. 45, no. 6, p. 65-68.
Prostka, H.J., 1967, Preliminary geologic map of the Durkee quadrangle, Oregon: Oregon Department of Geology and Mineral Industries, Geologic Map Series GMS-3, scale 1:62,500.
Reef, J.W., 1983, The Unity Reservoir rhyodacite tuff-breccia and associated volcanic rocks, Baker County, Oregon: Pullman, Washington State University, M.S. thesis, 128 p.
Rytuba, J.J., and Conrad, W.K., 1981, Petrochemical characteristics of volcanic rocks associated with uranium deposits in the McDermitt Caldera Complex, in Goodell, P.C. and Waters, A.C., eds., Uranium in volcanic and volcaniclastic rocks: American Association of Petroleum Geologists Studies in Geology no. 13, p. 63-72.
Schmincke, H-V, and Swanson, D.A., 1967, Laminar viscous flowage structures in ash-flow tuffs from Gran Canaria, Canary Islands: Journal of Geology, v. 75, no. 6, p. 641-644.
Silberling, N.J., Jones, D.L., Blake, M.C., Jr., and Howell, D.G., 1987, Lithotectonic terrane map of the western conterminous United States: U.S. Geological Survey Miscellaneous Field Studies Map MF-1874-C, scale 1:2,500,000, 20 p.
Simons, F.S., and Prinz, W.C., 1973, Gold, in Brobst, D.A., and Pratt, W.P., eds., United States mineral resources: U.S. Geological Survey Professional Paper 820, p. 263-275.
Vallier, T.L., Brooks, H.C., and Thayer, T.P., 1977, Paleozoic rocks of eastern Oregon and western Idaho, in Stewart, J.H., Stevens, C.H., and Fritsche, A.E., eds., Paleozoic paleogeography of the Western United States: Society of Economic Paleontologists and Mineralogists, Pacific Section, Pacific Coast Paleolgeography Symposium 1, p. 455-466.
Walker, G.W., 1977, Geologic map of Oregon east of the 121st meridian: U.S. Geological Survey Miscellaneous Investigations Series Map I-902, scale 1:500,000.
Walker, G.W., Dalrymple, G.B., and Lanphere, M.A., 1974, Index to potassium-argon ages of Cenozoic volcanic rocks of Oregon: U.S. Geological Survey Miscellaneous Field Studies Map MF-569, 2 sheets, scale 1:1,000,000.
Walker, N.W., 1986, U/Pb geochronologic and petrologic studies in the Blue Mountains terrane, northeast Oregon and westernmost central Idaho: implications for pre-Tertiary evolution: Santa Barbara, University of California, Ph.D. dissertation, 224 p.