CONCENTRATION AND TRANSPORT DATA FOR DISSOLVED INORGANIC CONSTITUENTS IN WATER COLLECTED DURING SEVEN CRUISES ON THE MISSISSIPPI RIVER AND SOME OF ITS TRIBUTARIES, JULY 1987-JUNE 1990

by T. I. Brinton, J. R. Garbarino, D. B. Peart, H. E. Taylor, and R. C. Antweiler

---

U.S. GEOLOGICAL SURVEY

Open-File Report 94-524

Denver, Colorado
1995

U.S. DEPARTMENT OF THE INTERIOR

BRUCE BABBITT, Secretary

U.S. GEOLOGICAL SURVEY

Gordon P. Eaton, Director

The use of trade, product, industry, or firm names is for descriptive purposes only and does not imply endorsement by the U.S. Government.

For additional information write to:

Chief, Branch of Regional Research
U.S. Geological Survey
Box 25046, MS 418
Denver Federal Center
Denver, CO 80225

Copies of this report can be purchased from:

U.S. Geological Survey
Earth Science Information Center
Open-File Reports Section
Box 25286, MS 517
Denver Federal Center
Denver, CO 80225

CONTENTS

Page
Abstract 1
Introduction 1
Sample collection 2
Sample processing 2
Quality control 3
Analytical methods 4
Analyte concentration and transport data 5
References 5

FIGURES

1. Map showing the Mississippi River and some of its tributaries 8
2. Schematic diagram of filter apparatus used for filtration of trace-element samples 9
3. Schematic diagram of nitric acid dispensing bottle. 10

TABLES

1. Sampling sites on the Mississippi River and some of its tributaries. 11
2-9. Trace-element concentrations for field blanks taken during the:
2. July-August 1987 cruise on August 9, 1987 12
3. November-December 1987 cruise 12
4. May-June 1988 cruise. 14
5. May-June 1988 cruise on May 18, 1988 17
6. March-April 1989 cruise 17
7. June 1989 cruise 19
8. February-March 1990 cruise on March 13, 1990 21
9. May-June 1990 cruise on June 26, 1990 21
10. Major-element concentrations for field blanks collected during the July-August 1987, November-December 1987, May-June 1988, March-April 1989, June 1989, February-March 1990 and the May-June 1990 cruises 22
11-17. Quality-control data for analyses of samples from the:
11. July-August 1987 cruise 24
12. November-December 1987 cruise 25
13. May-June 1988 cruise 26
14. March-April 1989 cruise 27
15. June 1989 cruise 28
16. February-March 1990 cruise 29
17. May-June 1990 cruise 30
18-24. Concentration data for dissolved trace-elements in water samples collected from the Mississippi River and some of its tributaries during the:
18. July-August 1987 cruise 31
19. November-December 1987 cruise. 36
20. May-June 1988 cruise. 39
21. March-April 1989 cruise 43
22. June 1989 cruise 46

Page
23. February-March 1990 cruise....50
24. May-June 1990 cruise....53
25-31. Concentration data for dissolved major elements in water samples collected from the Mississippi River and some of its tributaries during the:
25. July-August 1987 cruise....57
26. November-December 1987 cruise....58
27. May-June 1988 cruise....59
28. March-April 1989 cruise....60
29. June 1989 cruise....61
30. February-March 1990 cruise....62
31. May-June 1990 cruise....63
32-34. Concentration data for dissolved chloride, sulfate, and nitrate (as nitrogen) in water samples collected from the Mississippi River and some of its tributaries during the:
32. July-August 1987 cruise....64
33. November-December 1987 cruise....65
34. May-June 1988 cruise....65
35-36. Concentration data for dissolved chloride and sulfate in water samples collected from the Mississippi River and some of its tributaries during the
35. March-April 1989 cruise....66
36. June 1989 cruise....66
37-38. Concentration data for dissolved chloride, sulfate, and nitrate (as nitrogen) in water samples collected from the Mississippi River and some of its tributaries during the:
37. February-March 1990 cruise....67
38. May-June 1990 cruise....67
39-45. Concentration data for dissolved bicarbonate and carbonate in water samples collected from the Mississippi River and some of its tributaries during the:
39. July-August 1987 cruise....68
40. November-December 1987 cruise....69
41. May-June 1988 cruise....69
42 March-April 1989 cruise....70
43. June 1989 cruise....70
44. February-March 1990 cruise....71
45 May-June 1990 cruise....71
46-52. Discharge and corresponding transport data for dissolved trace elements in water samples collected from the Mississippi River and some of its tributaries during the:
46. July-August 1987 cruise....72
47. November-December 1987 cruise....73
48. May-June 1988 cruise....75
49. March-April 1989 cruise....76
50. June 1989 cruise....78
51. February-March 1990 cruise....79
52. May-June 1990 cruise....81
53-59. Discharge and corresponding transport data for dissolved major elements in water samples collected from the Mississippi River and some of its tributaries during the:
53. July-August 1987 cruise....82
54. November-December 1987 cruise....82
55. May-June 1988 cruise....83
56. March-April 1989 cruise....83
57. June 1989 cruise....84
58. February-March 1990 cruise....84
59. May-June 1990 cruise....85

Page

60-66. Discharge and corresponding transport data for dissolved major anions in water samples collected from the Mississippi River and some of its tributaries during the:
60. July-August 1987 cruise 85
61. November-December 1987 cruise 86
62. May-June 1988 cruise 86
63. March-April 1989 cruise 87
64. June 1989 cruise 87
65. February-March 1990 cruise 88
66. May-June 1990 cruise 88

67-73. Concentration data for dissolved trace elements in ultrafilter permeate from water samples collected from the Mississippi River and some of its tributaries during the:
67. July-August 1987 cruise 89
68. November-December 1987 cruise 90
69. May-June 1988 cruise 92
70. March-April 1989 cruise 93
71. June 1989 cruise 95
72. February-March 1990 cruise 96
73. May-June 1990 cruise 98

74-80. Concentration data for dissolved major elements in ultrafilter permeate from water samples collected from the Mississippi River and some of its tributaries during the:
74. July-August 1987 cruise 99
75. November-December 1987 cruise 99
76. May-June 1988 cruise 100
77. March-April 1989 cruise 100
78. June 1989 cruise 101
79. February-March 1990 cruise 101
80. May-June 1990 cruise 102

CONVERSION FACTORS and ABBREVIATIONS

Multiply	By	To obtain
	Length	
meter (m)	0.3048	foot
centimeter (cm)	2.54	inch
millimeter (mm)	25.4	inch
micrometer (µm)	25400	inch
	Volume	
milliliter (mL)	0.03382	ounce, fluid
liter (L)	0.2642	gallon
	Flow	
cubic meter per second (m^3/s)	0.02832	cubic foot per second
	Mass	
microgram (µg)	0.00000003527	ounce, avoirdupois
milligram (mg)	0.00003527	ounce, avoirdupois
kilogram (kg)	35.27	ounce, avoirdupois

Temperature

Degree Celsius (°C) may be converted to degree Fahrenheit (°F) by using the following equation:

$$°F = 9/5\ (°C) + 32.$$

BLANK PAGE

CONCENTRATION AND TRANSPORT DATA FOR DISSOLVED INORGANIC CONSTITUENTS IN WATER COLLECTED DURING SEVEN CRUISES ON THE MISSISSIPPI RIVER AND SOME OF ITS TRIBUTARIES, JULY 1987-JUNE 1990

By T.I. Brinton, J.R. Garbarino, D.B. Peart, H.E. Taylor and R.C. Antweiler

ABSTRACT

Concentration and corresponding transport values for selected dissolved constituents were determined for samples collected on the Mississippi River and some of its tributaries at three low-water discharges from July 18, 1987, to June 7, 1988 and four high-water discharges from March 9, 1989, to June 27, 1990. Data were obtained for major elements--calcium, magnesium, potassium, silicon (as SiO_2), and sodium; trace elements--aluminum, arsenic, barium, beryllium, boron, cadmium, chromium, cobalt, copper, iron, lead, lithium, manganese, molybdenum, nickel, strontium, thallium, uranium, vanadium, and zinc; alkalinity, and major anions--chloride, sulfate, and nitrate as nitrogen--for selected cruises. Analytical techniques used were inductively coupled plasma-atomic emission spectrometry, inductively coupled plasma-mass spectrometry and ion chromatography. Protocols were designed and implemented to separate suspended sediment from whole water, ensure sample preservation, and estimate sample collection and sample processing errors.

INTRODUCTION

The Mississippi River and its tributaries comprise the largest river system in the United States (fig. 1). It drains both the heavily industrialized urban areas to the east and agricultural rural areas to the west. In addition to being one of the major sources of chemicals and sediment discharged into the Gulf of Mexico, the system also provides the primary drinking-water supply for many communities.

This report presents data on the occurrence and distribution of dissolved constituents in the river system. The distribution, movement, and storage of contaminants in the river system have a substantial effect on the ecology, environmental chemistry, and utilization of the resource. A multidisciplinary research investigation has been undertaken by the U.S. Geological Survey to study the water quality of the river system. This investigation includes the study of the water chemistry as related to inorganic contaminants and their interaction with river sediments. Both naturally occurring and anthropogenic trace elements are found in the river system. These trace elements principally originate from mineral deposits, drainage from mining activities, industrial manufacturing and processing, and municipal wastes. Trace elements are in equilibrium among soluble species, suspended-particulate matter, and bed sediments, including insoluble precipitates. The soluble species range from aqueous to organic complexes that are often pH dependent. This partitioning and interaction plays a significant role in the transport and storage of trace elements in the river system.

Numerous references report concentrations of selected trace elements and chloride, sulfate, nitrate and bicarbonate ions in the Mississippi River (Taylor and others, 1990; T.I. Brinton, R.C. Antweiler and H.E. Taylor, unpub. data, 1992). Other reports describe data on a number of elements collected during long-term monitoring programs (Briggs and Ficke, 1978; Smith and others, 1987) or during a specific study on a limited reach of the river (Everett, 1971; Wells, 1980; Shiller and Boyle, 1983; 1987; Trefry and others, 1986; Taylor and Shiller, 1995; Taylor and others, 1995).

This report provides concentration data on several dissolved constituents in the Mississippi River and some of its tributaries on a geographic and seasonal basis, as a foundation to the detailed study of the chemical and physical partitioning of trace elements with sediments. This design not only provides information on the geographical variations due to tributary inflow and point sources, but also provides some insight on the effects due to variations in season and river stage. Data in this report are from samples collected during three low-water cruises from July 18, 1987, to June 7, 1988, and four high-water cruises from March 8, 1989, to June 27, 1990.

Special thanks are given to the research vessel ACADIANA crew, Lee Black, Wilton Delaune, Chuck Guidry, Craig LeBoeuf, Ken Oliver, Wayne Simoneaux, and Steve Rabalais. Gratitude is expressed to the many colleagues who assisted in collecting and processing samples and providing logistical support including Daphne Frilot, Lois Koehnken, Tom Kraemer,Dick Martin, Brent McKee, Alan Shiller, Dick Tagg, Tim Willoughby, Ellen Axtmann, Pat Brown, Wes Campbell, Jerry Leenheer, Tom Leiker, Debby Martin, Robert Meade, John Moody, Ted Noyes, Wilfred Pereira, James Ranville, Terry Rees, Colleen Rostad, James Seeley, Robert Stallard, and Herbert Stevens. Appreciation is expressed to Heidi Hayes, and David Roth for their assistance in completing the laboratory analyses and compiling data for this report.

SAMPLE COLLECTION

Sampling was conducted from the research vessel ACADIANA at predetermined sites on the Mississippi River and some of its tributaries--the Illinois, Missouri, Ohio, White, Arkansas, and Yazoo Rivers. During one cruise, additional sites were sampled on the Ohio River and its major tributaries, the Wabash, Cumberland, and Tennessee Rivers. Sites were chosen at selected locations along the Mississippi River and at locations below the confluence with tributaries. The sampling strategy used the Lagrangian principle (Meade and others, 1985), in which an attempt was made to follow a fixed parcel of water downstream and sample it at each of the sites in a sequential fashion. The use of this sampling technique is described in more detail by Meade and others (1985); Meade and Stevens (1990); Moody and Meade (1992, 1993); Moody, (1992), and Leenheer and others, (1989). Sampling sites are listed in table 1 and relative locations of the sampling sites in the river system are shown in figure 1.

A previously described collapsible-bag sampler (Stevens and others, 1980; Nordin and others, 1983; and Meade, 1985) was used to collect depth-integrated samples from 10 to 40 verticals at each sampling site (see Moody and Meade, 1992, for more details.) Samples from alternate verticals were combined into two composite samples (composite A and composite B) which were analyzed independently to evaluate sampling precision. Approximately 100 L of total composited sample was collected at each site. Teflon bags were used in the bag sampler to minimize sample contamination and to facilitate quantitative transfer of sample and suspended material. Extreme care was used to minimize any possible metal contamination by using Teflon, high-density polyethylene, or Teflon-coated stainless-steel sample-processing equipment. Talc-free polyethylene, polyvinyl chloride, or Teflon gloves were used during the entire sample handling and processing procedure.

In addition to the depth-integrated composite samples, a grab sample was collected about 30 cm below the surface at the centroid-of-flow using a 1-L polyethylene bottle mounted on the end of a 4-m fiberglass pole. This sample provided an indication of how well mixed the water at the sampling site was and the degree of importance for depth-integrated sample collection at each site.

SAMPLE PROCESSING

Composited samples were passed through a 63-μm nickel screen to remove sand-size suspended material and miscellaneous debris. Field blanks using deionized water (Nanopure) indicate that the nickel screen contributes negligible contamination to trace-element concentrations. Both composite A and composite B samples, made up of water, and particulate matter smaller than 63 μm, were representatively split into subsamples using a Teflon coated stainless-steel churn splitter. Individual aliquots were taken from the splitter for trace elements, major anions, and alkalinity determinations.

A Teflon or plastic vacuum filter apparatus, similar to the one shown in figure 2, was used to remove particulate matter greater than 0.40 μm from the trace-element subsample. A precise protocol was used for the filtration: (1) The filter funnel was thoroughly cleaned and rinsed with deionized water (Nanopure); (2) a new 0.40-μm pore size 47-mm-diameter Nuclepore polycarbonate-membrane filter was placed on the filter support and precleaned by drawing 50 mL of 0.1 percent (volume/volume) ultrapure nitric acid-rinse solution through the filter into a waste bottle; (3) the filter was then rinsed by drawing 100 mL of deionized water (Nanopure) through it into a waste bottle; (4) about 25 mL of the shaken composited subsample was then filtered to prerinse the sample bottle and also effectively preload the filter with particulate; (5) the balance of the subsample (about 225 mL) was filtered into the sample bottle; and (6) the filtered sample was preserved with the addition of 1 mL of concentrated ultrapure nitric acid (or to a pH less than 2) using a Teflon dispensing bottle (shown in fig. 3). Only one filter membrane was used for the entire aliquot. The grab sample was processed identically.

The major anion and alkalinity subsamples were immediately chilled to approximately 4°C, and no preservatives were added. These raw-water samples were transported on ice in coolers to the laboratory. Subsamples for major anions were filtered through a 0.45-μm pore size, 25-mm-diameter polysulfone-membrane syringe filter and analyzed. Subsamples for alkalinity were decanted from the chilled, settled samples and analyzed.

Ordinarily, a separate nutrient sample is split, processed, preserved, and analyzed for nitrate. The conventional procedure of adding mercuric chloride as an antibacterial preservative was considered inappropriate because of possible cross-contamination of other samples. Consequently, nitrate ion results were measured on the major anion subsample as part of the ion chromatographic procedure. Although the reported nitrate data are considered accurate, results are tabulated primarily for informational purposes and should not be considered definitive.

The remaining portions of composite A and B were combined and bulk processed, as described by Leenheer and others (1989) and Rees and others (1991), to separate suspended particulate matter into specific particle size fractions. The greater than 4-μm particulate was first removed using a continuous-flow Teflon-coated centrifuge (Sharples, model AS-12). The effluent from the centrifuge was then processed through a tangential-flow ultrafilter to remove particulates larger than 0.005 μm. The separated particulate fractions from the centrifuge and ultrafilter were retained for characterization by sequential extractions and chemical analysis. The membranes used in the ultrafilter were made of deacetylated cellulose. Trace-element adsorption studies were done and it was determined that no significant adsorption occurred on this membrane material (Leenheer and others, 1989). The ultrafilter system, without membrane filter plates in place, was cleaned by pumping 10 L of deionized water (Nanopure) through the system between each sample. To ensure that no contamination from the filter membranes occurred, a dilute ultrapure nitric acid solution (pH 3.0-3.5) was passed through the filters and apparatus before processing the sample. A stack of five new filter plates was typically used at each site to provide suitable processing times and to eliminate carryover contamination between sites. Effluent from the ultrafilter, termed "ultrafilter permeate," was subsampled for trace elements and acidified as described above for the composites. Analytical results for the permeate sample provided an indication of the fraction of trace elements, particularly iron, manganese, and aluminum, that are associated with colloidal-sized material (Kennedy and others, 1974).

QUALITY CONTROL

The quality of the analytical results was controlled by collecting numerous field blanks and analyzing certified reference standards extensively along with the analysis of the samples. Field blanks were used to identify possible sources of contamination to samples during their collection and processing. Reference standards were used to monitor the accuracy of the analyses and the performance of laboratory instrumentation.

Two or three times during each sampling cruise, a series of field blanks were collected by processing about 30 to 60 L of shipboard deionized water (Nanopure) through the entire sample collection, subsampling, and sample-processing procedures in an effort to identify possible sources of sample contamination. Prior to

processing the field blank, a sample of the shipboard deionized water was collected. When processing the deionized water through the entire procedure, aliquots were taken at various steps. Samples were collected for trace-element analysis that represented water processed through the bag sampler using a Teflon bag, the nickel sieve and the glass 2,000 mL graduated cylinder used for collection efficiency measurements, and the 8 and 20-L Teflon-coated churn splitters. The remainder of the deionized water in the splitters was processed through the centrifuge followed by the tangential-flow ultrafilter with new filter plates. Samples of centrifuge effluent and ultrafilter permeate also were taken. Finally, deionized water was filtered through a Nuclepore filter to obtain a filter blank. All the field blank samples were preserved following the same protocols as their corresponding sample types. Major- and trace-element results for the field blanks from the subject cruises are tabulated in tables 2-10. Field blanks for major anions consisted of collecting shipboard deionized water, results of which indicated negligible contamination.

The accuracy of the sample data was ensured by analyzing 1 to 3 standard reference materials, periodically, within a set of unknown samples. Reference standards routinely comprised about 15 percent of an analytical run, or 1 in every 7. Twenty-four unknown samples were analyzed after every instrument calibration to minimize effects of instrumental drift. Unknown samples were reanalyzed whenever the experimental reference standard mean was greater than two standard deviations of the certified reference standard most probable value. Data for one of the reference standards used for quality assurance for individual cruises are listed in tables 11-17. The average and standard deviations are based on the sample population given and represent the accuracy and precision throughout the analysis of the entire set of samples from a given cruise.

Sampling precision can be estimated by comparing results obtained for composite A and composite B from data listed in tables 18 to 45. Calculations show good correlation (correlation coefficient of .984) between results for composite A and B for calcium, which is a typical element ranging in concentration from 20 to 70 mg/L, from the May-June 1988 cruise. Calculations for lead, a typical element ranging in concentration from 0.1 to 0.5 μg/L, from the May-June 1988 cruise show similar results. The sampling precision for other elements and sampling periods show equivalent relations.

ANALYTICAL METHODS

Trace elements were determined by a combination of analytical techniques including inductively coupled plasma-mass spectrometry (ICP-MS), inductively coupled plasma-atomic emission spectrometry (ICP-AES), and flame atomic absorption spectrometry (F-AAS). A Perkin Elmer-Sciex ICP-MS was configured and optimized for trace-element analyses as previously described (Taylor and Garbarino, 1991, and Garbarino and Taylor, 1992). Two basic types of analyses were performed using this technique: (1) A semiquantitative survey analysis detecting essentially all stable isotopes at detection limits of less than 0.1 μg/L and (2) individual element quantitative analysis with appropriate interference corrections. The analytes determined quantitatively were aluminum, arsenic, barium, beryllium, boron, cadmium, chromium, cobalt, copper, lead, lithium, manganese, molybdenum, nickel, thallium, uranium, vanadium, and zinc. A complete description of the analytical method, a listing of detection limits, and accuracy and precision data are provided by Garbarino and Taylor (1992).

Other elements were determined using a Jarrell-Ash Atomcomp 975 inductively coupled argon plasma-atomic emission spectrometer. The analytical system, methodology, detection limits, and accuracy and precision data for this method are described by Garbarino and Taylor (1979, 1980) and Skougstad and others (1979). The analytes determined were calcium, magnesium, sodium, strontium, silicon (as SiO_2), and iron. Potassium was determined by flame-atomic absorption spectrometry (F-AAS) using an Instrumentation Laboratory, Model 751 instrument and the method described by Skougstad and others (1979).

Major anion concentrations (chloride, sulfate, and nitrate), which are used to describe general water chemistry, were determined by ion chromatographic techniques (Hedley and Fishman, 1982; T.I. Brinton, R. C. Antweiler and H.E. Taylor, unpub. data, 1992). Alkalinity, as bicarbonate, was determined using an automated Radiometer titrator and calculated from the pH data (Skougstad and others, 1979).

ANALYTE CONCENTRATION AND TRANSPORT DATA

The data obtained from the analyses of water samples collected from the Mississippi River and some of its tributaries are listed in tables 18-80. All the samples were analyzed in a random fashion, the reagent was blank subtracted, and spectral background corrected. Results that were less than the detection limit are identified by the less-than symbol (<), preceding the detection limit value. Results for major- and trace-elements represent a mean based on two to five replicate analyses. Results for major anions represent a single analysis. Analytes that were not determined for a particular sample are identified by --, and transport data for which the corresponding concentration was less than the detection limit are identified by *.

Dissolved trace-element concentrations (aluminum, arsenic, barium, beryllium, boron, cadmium, cobalt, chromium, copper, iron, lead, lithium, manganese, molybdenum, nickel, strontium, thallium, uranium, vanadium, and zinc) are in tables 18-24. Dissolved major-element concentrations (calcium, magnesium, potassium, sodium, silicon as SiO_2 are in tables 25-31. Dissolved major anion [chloride, sulfate, and nitrate as nitrogen] concentrations are in tables 32-38. Dissolved carbonate, and bicarbonate concentrations are in tables 39-45.

Transport values were calculated by multiplying the analyte concentration by the measured water discharge and a unit conversion factor (0.0864 if concentration is reported in μg/L and 86.4 if concentration is reported in mg/L). All transport values are in units of kilograms per day (kg/d). Water discharges were measured during the cruises and are reported by Moody and Meade (1992, and 1993), and the corresponding calculated trace-element transport data for sampling sites of the Mississippi River and some of its tributaries for every cruise are listed in tables 46-52. Major-element transport data are listed in tables 53-59. Major-anion transport data are in tables 60-66.

Dissolved trace-element concentrations for ultrafilter permeate aliquots for every cruise are in tables 67-73. Dissolved major-element concentrations for ultrafilter permeate aliquots are in tables 74-80. Permeate results for iron, manganese, and aluminum reflect the truly dissolved concentration because of the removal of the colloidal fractions greater than 0.005 μm.

REFERENCES

Briggs, J.C., and J.F. Ficke, 1978, Quality of rivers of the United States, 1975 water year: U.S. Geological Survey Open-File Report 78-200, 436 p.

Everett, D.E., 1971, Hydrologic and quality characteristics of the lower Mississippi River, Louisiana: Louisiana Department of Public Works Technical Report 5, 48 p.

Garbarino, J.R., and Taylor, H.E., 1979, An inductive-coupled plasma atomic-emission spectrometric method for routine water quality testing: Applied Spectroscopy, v. 33, p. 220-226.

Garbarino, J.R., and Taylor, H.E., 1980, A Babington-type nebulizer for the use in the analysis of natural water samples by inductively coupled plasma spectrometry: Applied Spectroscopy, v. 34, p. 393-399.

Garbarino, J.R., and Taylor, H.E., 1992, Inductively coupled plasma-mass spectrometric method for the determination of dissolved trace elements in water: U.S. Geological Survey Open-File Report 94-358.

Hedley, A.G., and Fishman, M.J., 1982, Automation of an ion chromatograph for precipitation analysis with computerization data reduction: U.S. Geological Survey Water-Resources Investigations Report 81-78, 38 p.

Kennedy, V.C., Jones, B.F., and Zellweger, G.W., 1974, Filter pore-size effects on the analysis of As, Fe, Mn, and Ti in water: Water Resources Research, v. 10, p. 785-790.

Leenheer, J.A., Meade, R.H., Taylor, H.E., and Pereira, W.E., 1989, Sampling, fractionation, and dewatering of suspended sediment from the Mississippi River for geochemical and trace contaminant analysis, in Mallard, G.E., ed., U.S. Geological Survey Toxic Substances Hydrology Program,--Proceedings of the technical meeting, Phoenix, Arizona, September 26-30, 1988: U.S. Geological Survey Water- Resources Investigations Report 88-4220, p. 501-511.

Meade, R.H., 1985, Suspended sediment in the Amazon River and its tributaries in Brazil during 1982-84: U.S. Geological Survey Open-File Report 85-492, 34 p.

Meade, R.H., Dunne, T., Richey, J.E. U. de M. Santos, and Salati, E., 1985, Storage and remobilization of suspended sediment in the lower Amazon River of Brazil: Science, v. 228, p. 488-490.

Meade, R.H., and Stevens, H.H., 1990, Strategies and equipment for sampling suspended sediment and associated toxic chemicals in large rivers--with emphasis on the Mississippi River: The Science of the Total Environment, v. 97/98, p. 125-136.

Moody, J.A., 1992, Evaluation of the Lagrangian scheme for sampling the Mississippi River during 1987-90: U.S. Geological Survey Open-File Report 93-4042, 31 p.

Moody, J.A., and Meade, R.H., 1992, Hydrologic and sedimentologic data collected during three cruises at low water on the Mississippi River and some of its tributaries, July 1987-June 1988: U.S. Geological Survey Open-File Report 91-485, 143 p.

Moody, J.A. and Meade, R. H., 1993, Hydrologic and sedimentologic data collected during four cruises at high water on the Mississippi River and some of its tributaries, March 1989 - June 1990: U.S. Geological Survey Open-File Report 92-651, 227 p.

Nordin, C.F., Jr., Cranston, C.C., and Mejia-B., A., 1983, New technology for measuring water and suspended-sediment discharge of large rivers, in Proceedings of the International Symposium on River Sedimentation, 2d, Nanjing, China, October 11-16, 1983: Beijing, Water Resources and Electric Power Press, theme E, paper E20, p. 1145-1158.

Rees, T.F., Leenheer, J.A., and Ranville, J.F., 1991, Use of a single-bowl continuous-flow centrifuge for dewatering suspended sediment--effect on sediment physical and chemical characteristics: Hydrological Processes, v. 5, p. 210-214.

Shiller, A.M. and Boyle, E., 1983, Trace metals in the plume of the Mississippi River; EOS, v. 64, p. 1021.

Shiller, A.M. and Boyle, E., 1987, Variability of dissolved trace metals in the Mississippi River: Geochimica et Cosmochimica Acta, v. 51, p. 3273-3277.

Skougstad, M.W., Fishman, M.J., Friedman, L.C., Erdman, D.E., and Duncan, S.S., 1979, Methods for the determination of inorganic substances in water and fluvial sediments: U.S. Geological Survey Techniques of Water Resources Investigations, book 5, chap. A1, p. 229.

Smith, R.A., Alexander, R.B., and Wolman, M.G., 1987, Water-quality trends in the Nation's rivers: Science, v. 235, p. 1607-1615.

Stevens, H.H., Jr., Lutz, G.A., and Hubbell, D.W., 1980, Collapsible-bag suspended-sediment sampler: American Society of Civil Engineers Proceedings, Hydraulic Division Journal, v. 166, no. HY4, p. 611-616.

Taylor, H.E., and Garbarino, J.R., 1991, The measurement of trace metals in water resource monitoring samples by inductively coupled plasma-mass spectrometry: Spectrochimica Acta Reviews, v. 14, p. 33-44.

Taylor, H.E., Garbarino, J.R., and Brinton, T.I., 1990, The occurrence and distribution of trace metals in the Mississippi River and its tributaries: The Science of the Total Environment, v. 97/98, p. 369-384.

Taylor, H.E. and Shiller, A.M., 1995, Mississippi River methods comparison Study: Implications for water quality monitoring of dissolved trace elements: Environmental Science and Technology, v. 29, no. 5, p. 1313-1317.

Taylor, H.E., Shiller, A.M., Garbarino, J.R., and Brinton, T.I., 1995, Intercomparison experiments on dissolved trace-metal data from the Mississippi River and some of its tributaries, 1989-1990: U.S. Geological Survey Open-File Report 93-628, 28 p.

Trefry, J.H., Nelson, T.A., Trocine, R.P, Metz, S., and Vetler, T., 1986, Trace metal fluxes through the Mississippi River delta system, in Kullenberg, G., ed, Contaminant Fluxes Through the Coastal Zone: Rapp. P.-v. Reun. Const. Int. Explor. Mer, 186, p. 277-288.

Wells, F.C., 1980, Hydrology and water quality of the lower Mississippi River: Louisiana Department of Public Works Technical Report 21, 83 p.

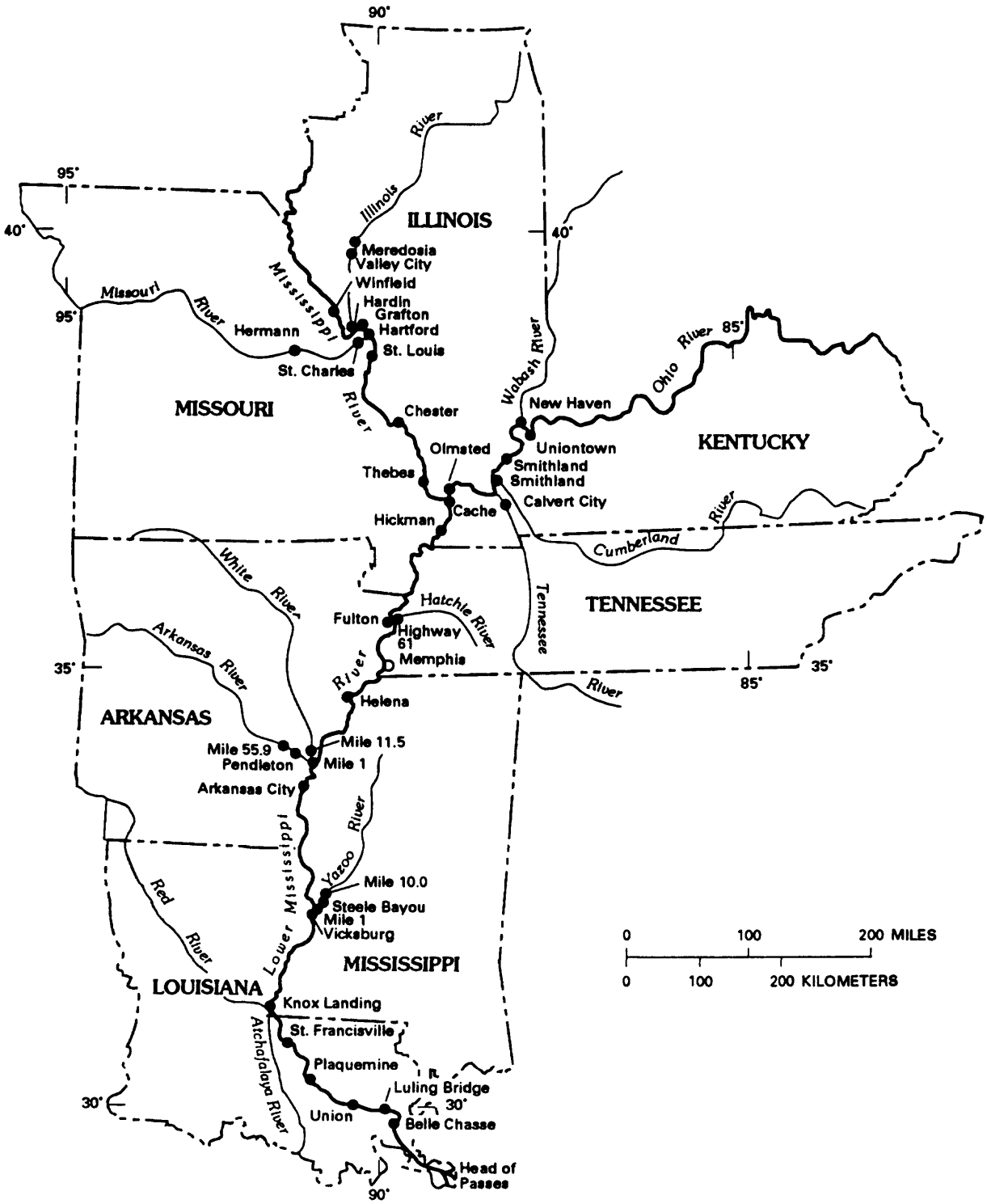

Figure 1. Map showing the Mississippi River and some of its tributaries.

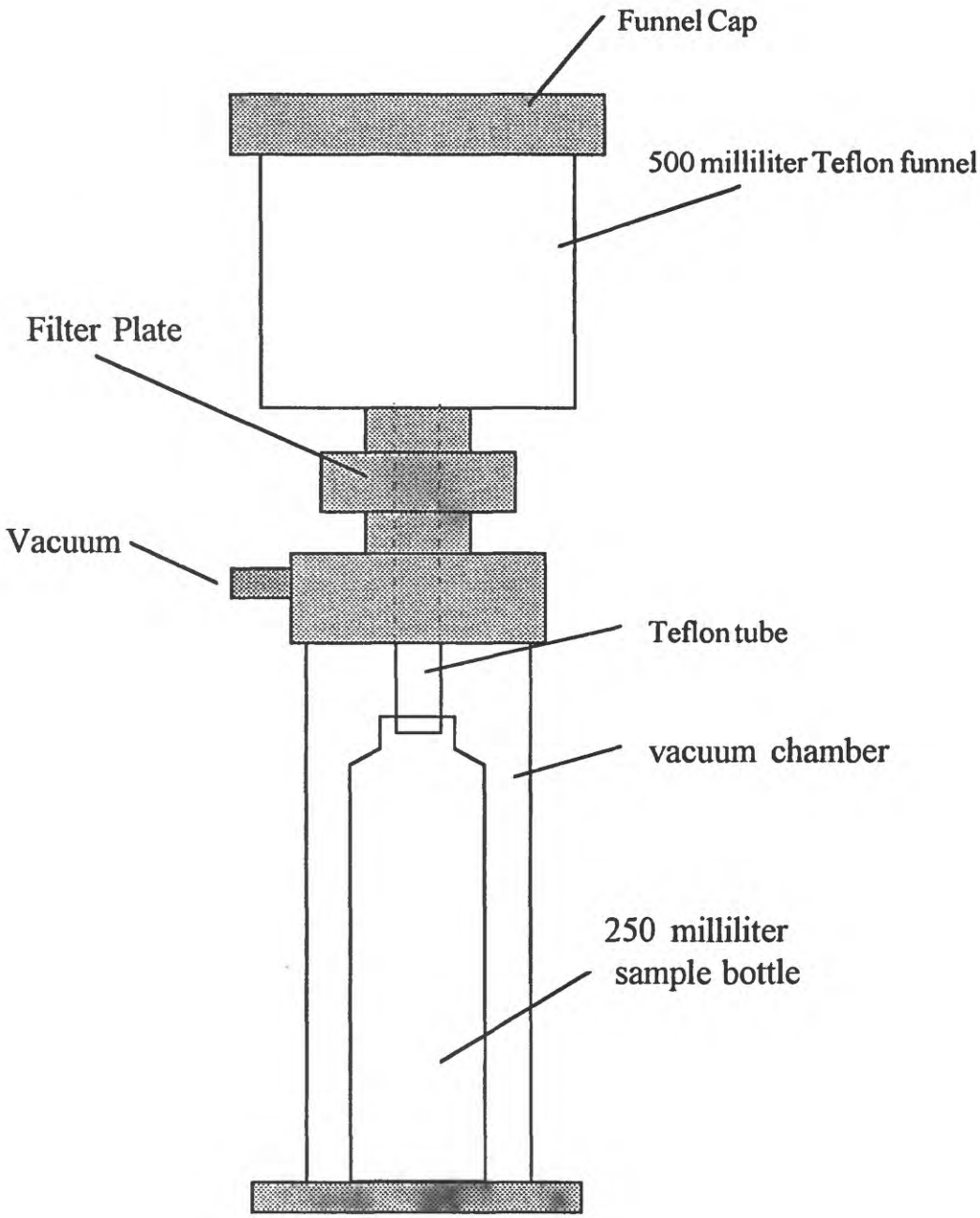

Figure 2. Schematic diagram of filter apparatus used for filtration of trace-element samples.

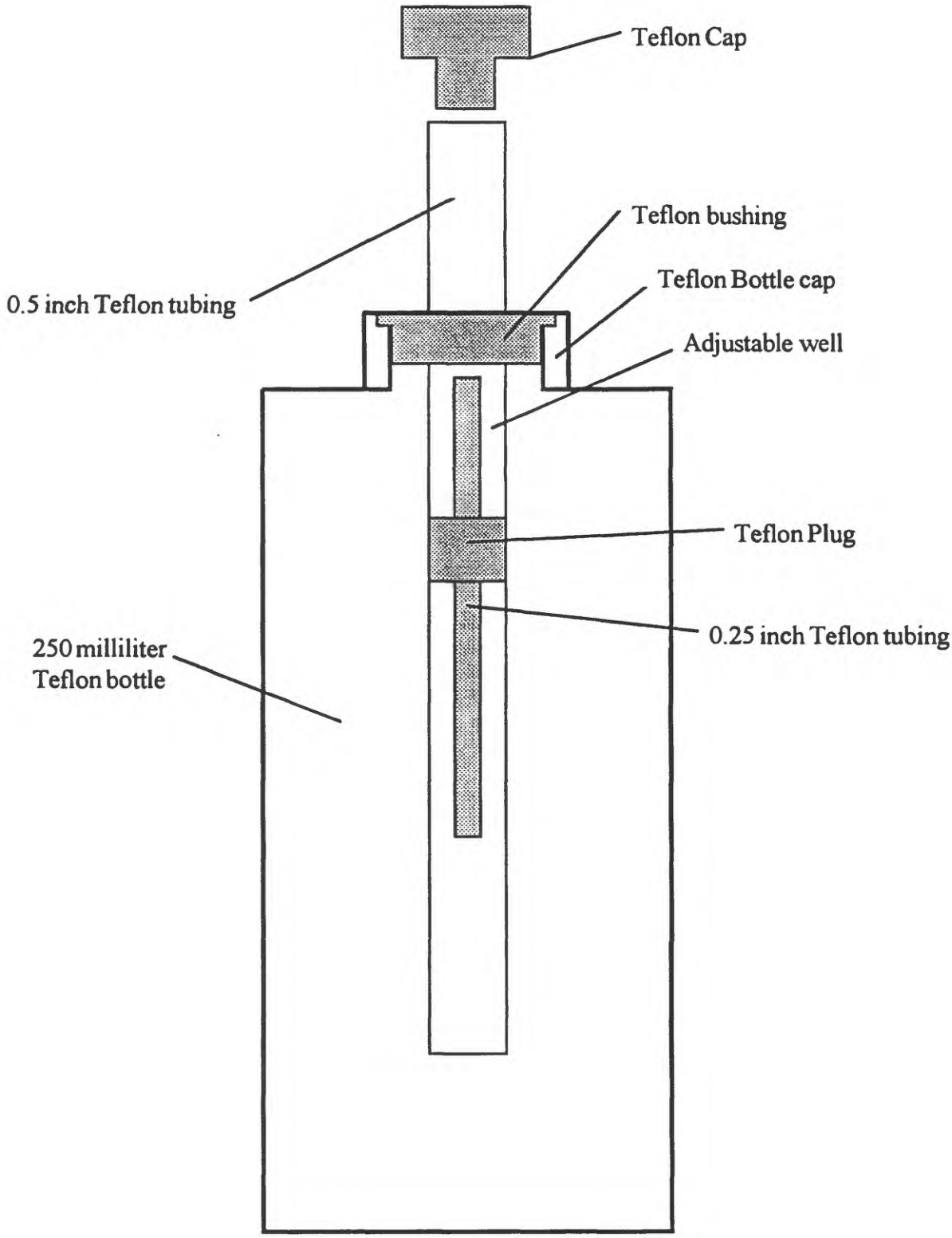

Figure 3. Schematic diagram of nitric acid dispensing bottle.

Table 1.--Sampling sites on the Mississippi River and some of its tributaries

[UM, Upper Mississippi River miles measured upriver from confluence with Ohio River; IL, Illinois River miles measured upriver from the confluence with Mississippi River (UM 218.0); MO, Missouri River miles measured upriver from the confluence with Mississippi River (UM 195.3); OH, Ohio River miles measured downriver from Pittsburgh, Pa. Ohio-Mississippi confluence is OH 981.5 and LM 953.8; WA, Wabash River miles measured upriver from confluence with Ohio River (OH 848.0); CU, Cumberland River miles measured upriver from confluence with Ohio River (OH 923.2); TE, Tennessee River miles measured upriver from confluence with Ohio River (OH 935.5); LM, Lower Mississippi River miles measured upriver from Head of Passes, La.; WH, White River miles measured upriver from confluence with Mississippi River (LM 598.8); AR, Arkansas River miles measured upriver from confluence with Mississippi River (LM 581.5); YZ, Yazoo River miles measured upriver from confluence with Mississippi River (LM 437.2); OR, Old River Outflow Channel miles measured downriver from the Old River Control structure (LM 314.5)]

Sampling site	River mile	July-August 1987	November-December 1987	May-June 1988	March-April 1989	June 1989	February-March 1990	May-June 1990
Mississippi River near Winfield, Mo.	UM 239.2	X	X	X	X	X		
Illinois River below Meredosia, Ill.	IL 67.2	X	X	X				
Illinois River at Valley City, Ill.	IL 61.0							X
Illinois River at Hardin, Ill.	IL 21.8				X	X		
Mississippi River below Grafton, Ill.	UM 214.6							X
Mississippi River at Hartford, Ill.	UM 197.7	X						
Missouri River at Hermann, Mo.	MO 97.9	X		X	X	X		
Missouri River at St. Charles, Mo.	MO 28.1		X					X
Mississippi River at St. Louis, Mo.	UM 179.3	X	X	X	X	X		
Mississippi River at Chester, Ill.	UM 108.9	X						
Mississippi River at Thebes, Ill.	UM 43.9		X	X	X	X		X
Mississippi River near Cache, Ill.	UM 14.8						X	
Ohio River at Uniontown, Ky.	OH 842.4						X	
Wabash River near New Haven, Ill.	WA 13.8						X	
Cumberland River near Smithland, Ky.	CU 6.8						X	
Tennessee River near Calvert City, Ky.	TE 11.1						X	
Ohio River below Smithland Locks and Dam, Ill. & Ky.	OH 919.2	X						
Ohio River at Olmsted, Ill.	OH 965.0	X	X	X	X	X	X	X
Mississippi River below Hickman, Ky.	LM 916.8	X	X	X	X	X	X	
Mississippi River at Fulton, Tenn.	LM 777.3		X	X		X		
Mississippi River below Fulton, Tenn.	LM 773.5				X		X	
Mississippi River above Hatchie River, Tenn.	LM 773	X						
Hatchie River at Mile 1.0, Miss.	---	X						
Mississippi River below Memphis, Tenn.	LM 731.2							X
Mississippi River at Helena, Ark.	LM 663.9	X	X	X	X	X	X	
White River at Mile 11.5, Ark.	WH 11.5	X	X	X	X	X		
White River at Mile 1.0, Ark.	WH 1.0						X	X
Arkansas River at Mile 55.9, Ark.	AR 55.9	X						
Arkansas River at Pendleton, Ark.	AR 22.4				X	X		
Arkansas River at Mile 1.0, Ark.	AR 1.0			X			X	X
Mississippi River above Arkansas City, Ark.	LM 566.0	X	X	X	X	X	X	
Mississippi River below Arkansas City, Ark.	LM 551.7							X
Yazoo River at Mile 10, Miss.	YZ 10.0		X	X				
Yazoo River below Steele Bayou, Miss.	YZ 9.0				X	X		X
Yazoo River at Mile 1.0, Miss.	YZ 1.0						X	
Mississippi River below Vicksburg, Miss.	LM 433.4	X	X	X	X	X	X	X
Old River Outflow Channel near Knox Landing, La.	OR 5.5	X	X	X	X	X		
Mississippi River near St. Francisville, La.	LM 266.4	X	X	X	X	X	X	X
Mississippi River at Plaquemine, La.	LM 208	X						
Mississippi River at Union, La.	LM 167	X						
Mississippi River at Luling Bridge, La.	LM 122	X						
Mississippi River below Belle Chasse, La.	LM 73.1	X	X	X	X	X	X	X

Table 2.--Trace-element concentrations for field blanks taken during the July-August 1987 cruise on August 9, 1987

[<, less than the detection limit; µg/L, micrograms per liter]

Trace element	Teflon-lined tank (µg/L)	Unlined tank (µg/L)	Trace element	Teflon-lined tank (µg/L)	Unlined tank (µg/L)
Aluminum	2.4	1.0	Lead	0.17	7.9
Arsenic	<0.6	<0.6	Lithium	<0.03	<0.03
Barium	7.6	0.12	Manganese	0.12	0.28
Beryllium	<0.02	<0.02	Molybdenum	<0.09	<0.09
Boron	<0.4	<0.4	Nickel	0.17	0.47
Cadmium	<0.1	0.15	Strontium	0.15	0.03
Chromium	0.36	1.2	Thallium	<0.05	<0.05
Cobalt	0.25	0.02	Uranium	<0.06	<0.06
Copper	0.44	3.8	Vanadium	<0.07	<0.07
Iron	<5	13	Zinc	3.9	5.9

Table 3.--Trace-element concentrations for field blanks taken during the November-December 1987 cruise

[<, less than the detection limit; --, not determined; µg/L, micrograms per liter]

Trace element	Date 1987	Deionized Water (µg/L)	Teflon bag sampler (µg/L)	Sieve (µg/L)	Splitter ((µg/L))	Centrifuge effluent (µg/L)	Ultrafilter permeate (µg/L)
Aluminum	12-6	7.2	--	--	--	--	--
	12-13	17	--	--	--	--	--
	12-19	<0.2	2.9	3.8	18	21	4.3
Arsenic	12-6	<0.6	--	--	--	--	--
	12-13	2.7	--	--	--	--	--
	12-19	<0.6	<0.6	<0.6	<0.6	<0.6	<0.6
Barium	12-6	9.3	--	--	--	--	--
	12-13	5.6	--	--	--	--	--
	12-19	<0.1	0.64	0.65	1.3	3.3	2.9
Beryllium	12-6	<0.02	--	--	--	--	--
	12-13	<0.02	--	--	--	--	--
	12-19	<0.02	<0.02	<0.02	<0.02	<0.02	<0.02
Boron	12-6	2.9	--	--	--	--	--
	12-13	15	--	--	--	--	--
	12-19	9.4	8.4	8.9	8.9	9.2	9.8
Cadmium	12-6	<0.1	--	--	--	--	--
	12-13	<0.1	--	--	--	--	--
	12-19	<0.1	<0.1	<0.1	<0.1	0.29	0.21

Table 3.--Trace-element concentrations for field blanks taken during the November-December 1987 cruise -- Continued

Trace element	Date 1987	Deionized Water (µg/L)	Teflon bag sampler (µg/L)	Sieve (µg/L)	Splitter (µg/L)	Centrifuge effluent (µg/L)	Ultrafilter permeate (µg/L)
Chromium	12-6	0.05	--	--	--	--	--
	12-13	1.3	--	--	--	--	--
	12-19	<0.2	<0.2	<0.2	<0.2	0.23	0.24
Cobalt	12-6	0.11	--	--	--	--	--
	12-13	0.1	--	--	--	--	--
	12-19	<0.008	<0.008	<0.008	0.018	0.042	0.041
Copper	12-6	0.17	--	--	--	--	--
	12-13	0.35	--	--	--	--	--
	12-19	0.21	0.13	0.15	0.24	3.5	1.8
Iron	12-6	<5	--	--	--	--	--
	12-13	<5	--	--	--	--	--
	12-19	<5	<5	<5	<5	16	<5
Lead	12-6	<0.06	--	--	--	--	--
	12-13	<0.06	--	--	--	--	--
	12-19	<0.06	<0.06	<0.06	<0.06	0.12	<0.06
Lithium	12-6	0.87	--	--	--	--	--
	12-13	0.47	--	--	--	--	--
	12-19	<0.03	0.26	0.28	0.55	0.66	0.66
Manganese	12-6	0.71	--	--	--	--	--
	12-13	2.2	--	--	--	--	--
	12-19	0.14	0.14	0.17	0.42	0.89	0.69
Molybdenum	12-6	0.11	--	--	--	--	--
	12-13	<0.09	--	--	--	--	--
	12-19	<0.09	<0.09	<0.09	<0.09	0.14	0.13
Nickel	12-6	2.5	--	--	--	--	--
	12-13	1.5	--	--	--	--	--
	12-19	<0.03	0.17	0.23	0.46	2.1	2.1
Strontium	12-6	18	--	--	--	--	--
	12-13	9	--	--	--	--	--
	12-19	0.03	1.3	1.3	2.6	5.9	6
Thallium	12-6	<.05	--	--	--	--	--
	12-13	<.05	--	--	--	--	--
	12-19	<.05	<.05	<.05	<.05	<.05	<.05

Table 3.--Trace-element concentrations for field blanks taken during the November-December 1987 cruise -- Continued

Trace element	Date 1987	Deionized Water (µg/L)	Teflon bag sampler (µg/L)	Sieve (µg/L)	Splitter (µg/L)	Centrifuge effluent (µg/L)	Ultrafilter permeate (µg/L)
Uranium	12-6	0.07	--	--	--	--	--
	12-13	<0.06	--	--	--	--	--
	12-19	<0.06	<0.06	<0.06	<0.06	<0.06	<0.06
Vanadium	12-6	0.28	--	--	--	--	--
	12-13	23	--	--	--	--	--
	12-19	1.4	0.48	0.29	0.29	0.35	0.3
Zinc	12-6	48	--	--	--	--	--
	12-13	4.8	--	--	--	--	--
	12-19	2.3	2	1.9	4.2	4.8	3.8

Table 4.--Trace-element concentrations for field blanks taken during the May-June 1988 cruise

[<, less than the detection limit; --, not determined; µg/L, micrograms per liter]

Trace element	Date 1988	Deionized Water (µg/L)	Process Blank[1] (µg/L)	Process Blank[2] (µg/L)	Splitter[1] (µg/L)	Splitter[2] (µg/L)	Centrifuge effluent[1] (µg/L)	Centrifuge effluent[2] (µg/L)	Ultrafilter permeate[1] (µg/L)	Ultrafilter permeate[2] (µg/L)
Aluminum	5-15	<0.2	--	--	--	--	--	--	--	--
	5-20	<0.2	--	--	--	--	--	--	--	--
	5-31	<0.2	1.4	1.5	0.68	0.31	4.9	1.8	1.2	<0.2
	6-8	<0.2	--	--	2.4	--	9.8	--	1.3	--
Arsenic	5-15	<0.6	--	--	--	--	--	--	--	--
	5-20	<0.6	--	--	--	--	--	--	--	--
	5-31	<0.6	<0.6	<0.6	<0.6	<0.6	<0.6	<0.6	<0.6	<0.6
	6-8	<0.6	--	--	<0.6	--	<0.6	--	<0.6	--
Barium	5-15	<0.1	--	--	--	--	--	--	--	--
	5-20	<0.1	--	--	--	--	--	--	--	--
	5-31	<0.1	0.13	0.14	0.11	0.11	0.88	0.66	0.52	0.32
	6-8	<0.1	--	--	<0.1	--	1.6	--	0.52	--
Beryllium	5-15	<0.02	--	--	--	--	--	--	--	--
	5-20	<0.02	--	--	--	--	--	--	--	--
	5-31	<0.02	<0.02	<0.02	<0.02	<0.02	<0.02	<0.02	<0.02	<0.02
	6-8	<0.02	--	--	<0.02	--	<0.02	--	<0.02	--
Boron	5-15	<0.4	--	--	--	--	--	--	--	--
	5-20	<0.4	--	--	--	--	--	--	--	--
	5-31	<0.4	<0.4	<0.4	<0.4	<0.4	<0.4	<0.4	0.61	<0.4
	6-8	<0.4	--	--	<0.4	--	0.73	--	0.51	--

Table 4.--Trace-element concentrations for field blanks taken during the May-June 1988 cruise -- Continued

Trace element	Date 1988	Deionized Water (µg/L)	Process Blank[1] (µg/L)	Process Blank[2] (µg/L)	Splitter[1] (µg/L)	Splitter[2] (µg/L)	Centrifuge effluent[1] (µg/L)	Centrifuge effluent[2] (µg/L)	Ultrafilter permeate[1] (µg/L)	Ultrafilter permeate[2] (µg/L)
Cadmium	5-15	<0.1	--	--	--	--	--	--	--	--
	5-20	<0.1	--	--	--	--	--	--	--	--
	5-31	<0.1	0.11	<0.1	<0.1	<0.1	2	1.8	1.5	0.92
	6-8	<0.1	--	--	<0.1	--	5.6	--	0.91	--
Chromium	5-15	<0.2	--	--	--	--	--	--	--	--
	5-20	<0.2	--	--	--	--	--	--	--	--
	5-31	<0.2	<0.2	<0.2	<0.2	<0.2	<0.2	<0.2	<0.2	<0.2
	6-8	<0.2	--	--	<0.2	--	0.26	--	<0.2	--
Cobalt	5-15	<0.008	--	--	--	--	--	--	--	--
	5-20	<0.008	--	--	--	--	--	--	--	--
	5-31	<0.008	<0.008	0.009	<0.008	<0.008	<0.008	<0.008	<0.008	<0.008
	6-8	<0.008	--	--	<0.008	--	0.033	--	0.016	--
Copper	5-15	<0.02	--	--	--	--	--	--	--	--
	5-20	0.029	--	--	--	--	--	--	--	--
	5-31	<0.02	0.091	0.17	0.24	0.048	0.36	0.28	1	1.2
	6-8	0.14	--	--	0.1	--	2	--	0.47	--
Iron	5-15	<5	--	--	--	--	--	--	--	--
	5-20	<5	--	--	--	--	--	--	--	--
	5-31	<5	<5	<5	<5	<5	<5	<5	<5	<5
	6-8	<5	--	--	<5	--	23	--	<5	--
Lead	5-15	<0.06	--	--	--	--	--	--	--	--
	5-20	<0.06	--	--	--	--	--	--	--	--
	5-31	<0.06	<0.06	<0.06	<0.06	<0.06	0.069	<0.06	0.089	<0.06
	6-8	<0.06	--	--	<0.06	--	0.25	--	0.07	--
Lithium	5-15	<0.03	--	--	--	--	--	--	--	--
	5-20	<0.03	--	--	--	--	--	--	--	--
	5-31	<0.03	<0.03	<0.03	<0.03	<0.03	0.049	<0.03	0.12	0.032
	6-8	<0.03	--	--	0.22	--	0.36	--	0.28	--
Manganese	5-15	<0.06	--	--	--	--	--	--	--	--
	5-20	<0.06	--	--	--	--	--	--	--	--
	5-31	<0.06	0.43	0.46	0.4	0.43	1.5	1.3	1.6	0.97
	6-8	<0.06	--	--	0.21	--	1.2	--	0.78	--
Molybdenum	5-15	<0.09	--	--	--	--	--	--	--	--
	5-20	<0.09	--	--	--	--	--	--	--	--
	5-31	<0.09	<0.09	<0.09	<0.09	<0.09	<0.09	<0.09	<0.09	<0.09
	6-8	<0.09	--	--	<0.09	--	<0.09	--	<0.09	--

Table 4.--Trace-element concentrations for field blanks taken during the May-June 1988 cruise -- Continued

Trace element	Date 1988	Deionized Water (µg/L)	Process Blank[1] (µg/L)	Process Blank[2] (µg/L)	Splitter[1] (µg/L)	Splitter[2] (µg/L)	Centrifuge effluent[1] (µg/L)	Centrifuge effluent[2] (µg/L)	Ultrafilter permeate[1] (µg/L)	Ultrafilter permeate[2] (µg/L)
Nickel	5-15	<0.03	--	--	--	--	--	--	--	--
	5-20	<0.03	--	--	--	--	--	--	--	--
	5-31	<0.03	0.11	0.11	0.1	0.092	0.46	0.32	0.74	0.29
	6-8	<0.03	--	--	0.09	--	0.75	--	0.37	--
Strontium	5-15	<0.01	--	--	--	--	--	--	--	--
	5-20	<0.01	--	--	--	--	--	--	--	--
	5-31	<0.01	0.15	0.11	0.12	0.12	0.65	0.32	0.85	0.32
	6-8	<0.01	--	--	0.064	--	2.7	--	1.2	--
Thallium	5-15	<0.05	--	--	--	--	--	--	--	--
	5-20	<0.05	--	--	--	--	--	--	--	--
	5-31	<0.05	<0.05	<0.05	<0.05	<0.05	<0.05	<0.05	<0.05	<0.05
	6-8	<0.05	--	--	<0.05	--	<0.05	--	<0.05	--
Uranium	5-15	<0.06	--	--	--	--	--	--	--	--
	5-20	<0.06	--	--	--	--	--	--	--	--
	5-31	<0.06	<0.06	<0.06	<0.06	<0.06	<0.06	<0.06	<0.06	<0.06
	6-8	<0.06	--	--	<0.06	--	<0.06	--	<0.06	--
Vanadium	5-15	<0.07	--	--	--	--	--	--	--	--
	5-20	<0.07	--	--	--	--	--	--	--	--
	5-31	<0.07	<0.07	<0.07	<0.07	<0.07	<0.07	<0.07	<0.07	<0.07
	6-8	<0.07	--	--	<0.07	--	0.21	--	<0.07	--
Zinc	5-15	<0.08	--	--	--	--	--	--	--	--
	5-20	0.5	--	--	--	--	--	--	--	--
	5-31	<0.08	0.53	2	0.51	0.59	2.5	2.6	4.4	2.3
	6-8	0.46	--	--	0.89	--	1.8	--	2.7	--

[1]Processed using unstained Teflon-coated churn splitters.
[2]Processed using rust stained Teflon-coated churn splitters.

Table 5.-- Trace-element concentrations for field blanks taken during the May-June 1988 cruise on May 18, 1988

[<, less than the detection limit; µg/L, micrograms per liter]

Trace element	Teflon bag A (µg/L)	Teflon bag B (µg/L)	Splitter A (µg/L)	Splitter B (µg/L)	Sieve A (µg/L)	Sieve B (µg/L)	Splitter composite (µg/L)	Centrifuge effluent (µg/L)	Ultrafilter retentate (µg/L)	Ultrafilter permeate (µg/L)
Aluminum	<0.2	<0.2	1.7	<0.2	<0.2	<0.2	3.4	6.3	1.8	<0.2
Arsenic	<0.6	<0.6	<0.6	<0.6	<0.6	<0.6	<0.6	<0.6	<0.6	<0.6
Barium	<0.1	<0.1	<0.1	<0.1	<0.1	<0.1	0.14	1	0.75	0.74
Beryllium	<0.02	<0.02	<0.02	<0.02	<0.02	<0.02	<0.02	<0.02	<0.02	<0.02
Boron	<0.4	<0.4	<0.4	<0.4	<0.4	<0.4	<0.4	5.5	<0.4	<0.4
Cadmium	<0.1	<0.1	<0.1	<0.1	<0.1	<0.1	<0.1	2	3.1	1.2
Chromium	<0.2	0.22	<0.2	<0.2	<0.2	<0.2	<0.2	0.75	0.35	<0.2
Cobalt	<0.008	<0.008	<0.008	<0.008	<0.008	<0.008	<0.008	0.018	0.024	<0.008
Copper	<0.02	<0.02	0.026	0.027	<0.02	<0.02	0.062	21	0.6	0.26
Iron	<5	<5	<5	<5	<5	<5	<5	27	16	<5
Lead	<0.06	<0.06	<0.06	<0.06	<0.06	<0.06	<0.06	0.13	0.13	<0.06
Lithium	<0.03	<0.03	<0.03	<0.03	<0.03	<0.03	<0.03	0.29	0.1	0.09
Manganese	<0.06	<0.06	0.39	0.12	<0.06	<0.06	0.61	12	4.9	4.7
Molybdenum	<0.09	<0.09	<0.09	<0.09	<0.09	<0.09	<0.09	<0.09	<0.09	<0.09
Nickel	0.046	0.033	0.064	0.085	<0.03	0.057	0.086	0.9	1.4	0.66
Strontium	<0.01	<0.01	0.049	0.032	<0.01	0.019	0.09	1.3	1.1	1.1
Thallium	<0.05	<0.05	<0.05	<0.05	<0.05	<0.05	<0.05	<0.05	<0.05	<0.05
Uranium	<0.06	<0.06	<0.06	<0.06	<0.06	<0.06	<0.06	<0.06	<0.06	<0.06
Vanadium	<0.07	<0.07	<0.07	<0.07	<0.07	<0.07	<0.07	0.08	<0.07	<0.07
Zinc	<0.08	0.24	0.36	0.15	<0.08	0.25	0.29	4.7	1.6	1.3

Table 6.-- Trace-element concentrations for field blanks taken during the March-April 1989 cruise

[<, less than the detection limit; --, not determined; µg/L, micrograms per liter]

Trace element	Date 1989	Deionized Water (µg/L)	Teflon bag sampler (µg/L)	Sieve (µg/L)	Splitter (µg/L)	Centrifuge effluent (µg/L)	Ultrafilter permeate (µg/L)
Aluminum	3-11	0.47	<0.2	<0.2	1.1	<0.2	<0.2
	3-25	<0.2	--	9.9	10	8.1	3.5
	3-31	<0.2	--	<0.2	3.1	<0.2	<0.2
Arsenic	3-11	<0.6	<0.6	<0.6	<0.6	<0.6	<0.6
	3-25	<0.6	--	<0.6	<0.6	<0.6	<0.6
	3-31	<0.6	--	<0.6	<0.6	<0.6	<0.6
Barium	3-11	0.23	0.84	0.94	0.97	1.7	1.2
	3-25	<0.1	--	<0.1	<0.1	<0.1	<0.1
	3-31	<0.1	--	<0.1	<0.1	<0.1	0.18
Beryllium	3-11	<0.02	<0.02	<0.02	<0.02	<0.02	<0.02
	3-25	<0.02	--	<0.02	<0.02	<0.02	<0.02
	3-31	<0.02	--	<0.02	<0.02	<0.02	<0.02

Table 6.-- Trace-element concentrations for field blanks taken during the March-April 1989 cruise -- Continued

Trace element	Date 1989	Deionized Water (µg/L)	Teflon bag sampler (µg/L)	Sieve (µg/L)	Splitter (µg/L)	Centrifuge effluent (µg/L)	Ultrafilter permeate (µg/L)
Boron	3-11	<0.4	<0.4	<0.4	<0.4	<0.4	<0.4
	3-25	<0.4	--	29	28	28	30
	3-31	<0.4	--	<0.4	0.88	0.62	0.65
Cadmium	3-11	<0.1	<0.1	<0.1	<0.1	0.6	<0.1
	3-25	<0.1	--	<0.1	<0.1	<0.1	<0.1
	3-31	<0.1	--	<0.1	<0.1	<0.1	<0.1
Chromium	3-11	<0.2	<0.2	<0.2	<0.2	<0.2	<0.2
	3-25	<0.2	--	<0.2	<0.2	0.26	<0.2
	3-31	<0.2	--	<0.2	<0.2	<0.2	<0.2
Cobalt	3-11	<0.008	0.014	0.013	0.019	0.016	0.013
	3-25	<0.008	--	<0.008	0.009	0.016	0.012
	3-31	0.011	--	0.014	0.016	<0.008	<0.008
Copper	3-11	<0.02	<0.02	<0.02	<0.02	0.077	<0.02
	3-25	<0.02	--	0.92	0.82	0.7	0.27
	3-31	<0.02	--	0.097	0.32	0.041	0.031
Iron	3-11	<5	<5	<5	<5	<5	<5
	3-25	<5	<5	<5	<5	<5	<5
	3-31	<5	<5	<5	<5	<5	<5
Lead	3-11	<0.06	<0.06	<0.06	<0.06	0.86	<0.06
	3-25	<0.06	--	0.14	0.14	0.13	<0.06
	3-31	<0.06	--	<0.06	<0.06	<0.06	<0.06
Lithium	3-11	0.16	0.37	0.34	0.33	0.3	0.36
	3-25	<0.03	--	0.46	0.48	0.53	0.53
	3-31	<0.03	--	0.46	0.62	0.6	0.58
Manganese	3-11	0.24	0.38	0.28	0.5	0.6	0.72
	3-25	<0.06	--	0.11	0.18	0.28	0.37
	3-31	<0.06	--	0.1	0.28	0.23	0.22
Molybdenum	3-11	0.27	<0.09	<0.09	<0.09	<0.09	<0.09
	3-25	<0.09	--	<0.09	<0.09	<0.09	<0.09
	3-31	<0.09	--	<0.09	<0.09	<0.09	<0.09
Nickel	3-11	<0.03	<0.03	<0.03	0.12	0.2	1.3
	3-25	<0.03	--	0.016	<0.03	0.28	0.31
	3-31	<0.03	--	<0.03	0.12	0.061	0.24
Strontium	3-11	0.068	3.3	3.1	3	3	3.3
	3-25	<0.01	--	<0.01	0.053	0.14	0.69
	3-31	<0.01	--	1.6	2	2	2.1

Table 6.-- Trace-element concentrations for field blanks taken during the March-April 1989 cruise -- Continued

Trace element	Date 1989	Deionized Water (µg/L)	Teflon bag sampler (µg/L)	Sieve (µg/L)	Splitter (µg/L)	Centrifuge effluent (µg/L)	Ultrafilter permeate (µg/L)
Thallium	3-11	<.05	<.05	<.05	<.05	<.05	<.05
	3-25	<0.05	--	<0.05	<0.05	<0.05	<0.05
	3-31	<0.05	--	<0.05	<0.05	<0.05	<0.05
Uranium	3-11	<0.06	<0.06	<0.06	<0.06	<0.06	<0.06
	3-25	<0.06	--	<0.06	<0.06	<0.06	<0.06
	3-31	<0.06	--	<0.06	<0.06	<0.06	<0.06
Vanadium	3-11	<0.07	<0.07	<0.07	<0.07	<0.07	<0.07
	3-25	<0.07	--	<0.07	<0.07	0.072	<0.07
	3-31	<0.07	--	<0.07	<0.07	<0.07	<0.07
Zinc	3-11	0.9	1.5	1.7	2.1	3.1	7
	3-25	0.82	--	1.4	0.76	3.2	2.5
	3-31	0.94	--	1.1	1.2	4.2	1.3

Table 7.-- Trace-element concentrations for field blanks taken during the June 1989 cruise

[<, less than the detection limit; µg/L, micrograms per liter]

Trace element	Date 1989	Deionized Water (µg/L)	Sieve (µg/L)	Splitter (µg/L)	Centrifuge effluent (µg/L)	Ultrafilter permeate (µg/L)
Aluminum	6-06	<0.2	3.6	3.6	3.2	20
	6-21	14	14	23	24	8.5
Arsenic	6-06	<0.6	<0.6	0.66	<0.6	<0.6
	6-21	<0.6	<0.6	<0.6	0.68	<0.6
Barium	6-06	<0.1	2.8	2	2.4	2.8
	6-21	1.7	1.2	1.8	1.8	1.6
Beryllium	6-06	0.031	0.023	<0.02	<0.02	0.04
	6-21	<0.02	<0.02	<0.02	0.032	0.02
Boron	6-06	<0.4	2.5	1.8	2.9	2.2
	6-21	11	7.2	9.1	8.7	8.8
Cadmium	6-06	<0.1	<0.1	<0.1	0.2	0.18
	6-21	<0.1	<0.1	<0.1	3.8	0.12
Chromium	6-06	<0.2	<0.2	<0.2	<0.2	<0.2
	6-21	<0.2	<0.2	<0.2	<0.2	<0.2
Cobalt	6-06	<0.008	0.041	0.036	0.044	0.046
	6-21	0.014	<0.008	<0.008	0.014	<0.008

Table 7.-- Trace-element concentrations for field blanks taken during the June 1989 cruise -- Continued

Trace element	Date 1989	Deionized Water (µg/L)	Sieve (µg/L)	Splitter (µg/L)	Centrifuge effluent (µg/L)	Ultrafilter permeate (µg/L)
Copper	6-06	<0.02	<0.02	0.052	0.17	0.15
	6-21	0.57	0.28	0.3	0.47	0.037
Iron	6-06	<5	<5	<5	<5	<5
	6-21	<5	<5	6	15	<5
Lead	6-06	<0.06	0.079	<0.06	<0.06	<0.06
	6-21	0.14	0.084	0.31	0.28	0.068
Lithium	6-06	<0.03	0.3	0.28	0.29	0.31
	6-21	0.48	0.27	0.4	0.39	0.38
Manganese	6-06	<0.06	1.5	1.4	2.1	2.2
	6-21	0.57	0.49	0.7	0.88	0.49
Molybdenum	6-06	<0.09	<0.09	<0.09	<0.09	<0.09
	6-21	<0.09	<0.09	<0.09	<0.09	<0.09
Nickel	6-06	<0.03	0.56	0.6	0.8	0.69
	6-21	0.17	0.096	0.25	0.52	0.32
Strontium	6-06	0.086	17	13	15	15
	6-21	5.2	3.2	4.2	4.5	4.2
Thallium	6-06	<0.05	<0.05	<0.05	<0.05	<0.05
	6-21	0.12	0.19	0.074	0.22	0.13
Uranium	6-06	<0.06	<0.06	<0.06	<0.06	<0.06
	6-21	0.2	0.52	0.12	0.46	0.17
Vanadium	6-06	0.074	0.09	0.071	<0.07	0.075
	6-21	<0.07	<0.07	<0.07	0.12	0.093
Zinc	6-06	2	1.2	1.2	2.9	2.2
	6-21	4.1	1.9	1.2	1.5	0.85

Table 8.-- Trace-element concentrations for field blanks taken during the February-March 1990 cruise on March 13, 1990

[<, less than the detection limit; µg/L, micrograms per liter]

Trace element	Deionized Water (µg/L)	Nuclepore (µg/L)	Sieve (µg/L)	Splitter (µg/L)	Centrifuge effluent (µg/L)	Ultrafilter permeate (µg/L)
Aluminum	2.6	4.6	3.1	16	6.1	0.75
Arsenic	0.7	0.7	0.68	0.69	0.66	<0.6
Barium	<0.1	<0.1	<0.1	<0.1	<0.1	<0.1
Beryllium	<0.02	<0.02	<0.02	<0.02	<0.02	<0.02
Boron	8.7	13	7	1.8	1.5	2.3
Cadmium	<0.1	<0.1	<0.1	<0.1	0.66	<0.1
Chromium	<0.2	<0.2	<0.2	<0.2	<0.2	<0.2
Cobalt	<0.008	<0.008	<0.008	<0.008	<0.008	<0.008
Copper	0.56	0.94	0.49	0.31	6.2	0.31
Iron	5	5	<5	13	12	<5
Lead	<0.06	<0.06	<0.06	<0.06	<0.06	<0.06
Lithium	1.1	1.5	1.1	0.66	0.65	0.65
Manganese	<0.06	0.061	<0.06	0.23	0.28	0.14
Molybdenum	<0.09	<0.09	<0.09	<0.09	<0.09	<0.09
Nickel	<0.02	<0.02	<0.02	<0.02	<0.02	<0.02
Strontium	0.63	<0.01	<0.01	0.49	0.29	1.2
Thallium	<0.05	<0.05	<0.05	<0.05	<0.05	<0.05
Uranium	<0.06	<0.06	<0.06	<0.06	<0.06	<0.06
Vanadium	<0.07	<0.07	<0.07	<0.07	<0.07	<0.07
Zinc	0.58	2.6	0.3	0.35	0.13	0.27

Table 9.-- Trace-element concentrations for field blanks taken during the May-June 1990 cruise on June 26, 1990

[<, less than the detection limit; µg/L, micrograms per liter]

Trace element	Deionized Water (µg/L)	Nuclepore (µg/L)	Sieve (µg/L)	Splitter (µg/L)	Centrifuge effluent (µg/L)	Ultrafilter permeate (µg/L)
Aluminum	12	1.8	17	24	15	4.9
Arsenic	<0.6	<0.6	<0.6	<0.6	<0.6	<0.6
Barium	0.1	<0.1	0.19	0.39	0.74	0.69
Beryllium	<0.02	<0.02	<0.02	0.021	0.028	0.024
Boron	7.1	0.93	10	9.4	8.9	10
Cadmium	<0.1	<0.1	<0.1	<0.1	1.4	0.2
Chromium	<0.2	<0.2	<0.2	<0.2	<0.2	<0.2
Cobalt	0.0085	<0.008	<0.008	0.015	0.033	0.04
Copper	6.1	0.58	1.2	0.9	5.8	0.9
Iron	<5	<5	<5	13	8	<5
Lead	1.5	0.07	0.28	0.23	0.46	<0.06
Lithium	2.1	0.39	3	3	2.7	2.8
Manganese	0.14	<0.06	0.28	0.67	0.82	0.7
Molybdenum	<0.09	<0.09	<0.09	<0.09	<0.09	<0.09
Nickel	0.12	<0.03	0.043	0.14	2.2	1.1
Strontium	0.025	0.015	0.12	0.24	0.93	1.4
Thallium	<0.05	<0.05	<0.05	<0.05	<0.05	<0.05
Uranium	<0.06	<0.06	<0.06	<0.06	<0.06	<0.06
Vanadium	<0.07	<0.07	<0.07	<0.07	<0.07	<0.07
Zinc	7.8	0.61	2.3	0.88	1.5	1.2

Table 10.--Major-element concentrations for field blanks collected during the July-August 1987, November-December 1987, May-June 1988, March-April 1989, June 1989, February-March 1990, and May-June 1990 cruises

[<, less than detection limit; mg/L, milligrams per liter]

Blank type	Calcium (mg/L)	Magnesium (mg/L)	Sodium (mg/L)	Silica (mg/L)
	August 9, 1987			
Teflon-lined tank	0.0052	<0.001	<0.01	<0.04
Unlined tank	0.0044	0.0012	<0.01	<0.04
	December 6, 1987			
Deionized Water	3.6	1.2	2.5	0.76
	December 13, 1987			
Deionized Water	1.9	0.53	4.6	1.6
	December 19, 1987			
Deionized Water	0.0029	<0.001	<0.01	0.7
Teflon sampler bag	0.24	0.18	1.7	1.5
Sieve	0.23	0.18	1.7	1.5
Splitter	0.44	0.34	3.1	1.9
Centrifuge effluent	1	0.52	3.4	2
Ultrafilter permeate	1	0.52	3.4	1.9
	May 15, 1988			
Deionized Water	0.028	0.16	0.05	<0.04
	May 18, 1988			
Teflon bag A	0.0021	<0.001	<0.01	<0.04
Teflon bag B	<0.001	<0.001	<0.01	0.048
Splitter A	0.018	0.0039	<0.01	<0.04
Splitter B	0.035	0.17	0.053	<0.04
Sieve A	0.0078	<0.001	<0.01	<0.04
Sieve B	0.0044	<0.001	<0.01	<0.04
Splitter composite	0.03	0.0091	<0.01	0.049
Centrifuge effluent	0.43	0.19	0.075	0.056
Ultrafilter retentate	0.38	0.18	0.11	<0.04
Ultrafilter permeate	0.38	0.17	0.11	<0.04
	May 20, 1988			
Deionized Water	<0.001	<0.001	<0.01	<0.04
	May 31,1988			
Deionized Water	0.029	0.01	0.021	0.094
Process Blank[1]	0.024	0.0052	0.012	0.069
Process Blank[2]	<0.001	<0.001	<0.01	<0.04
Splitter[1]	0.024	0.0057	0.016	0.096
Splitter[2]	0.024	0.0052	0.017	0.1
Centrifuge effluent[1]	0.13	0.034	0.038	0.078
Centrifuge effluent[2]	0.07	0.015	0.022	0.12
Ultrafilter permeate[1]	0.16	0.07	0.1	0.19
Ultrafilter permeate[2]	0.06	0.016	0.021	0.11
	June 8, 1988			
Deionized Water	<0.001	<0.001	0.01	0.054
Splitter[1]	0.014	0.0032	0.55	0.4
Centrifuge effluent[1]	0.58	0.2	0.84	0.46
Ultrafilter permeate[1]	0.24	0.079	0.71	0.42
	March 11, 1989			
Deionized Water	0.4	0.3	0.19	0.25
Teflon sampler bag	0.83	0.64	0.43	0.56
Sieve	0.79	0.62	0.4	0.54
Splitter	0.76	0.59	0.39	0.54
Centrifuge effluent	0.8	0.59	0.38	0.53
Ultrafilter permeate	0.87	0.62	0.42	0.54

Table 10.--Major-element concentrations for field blanks collected during the July-August 1987, November-December 1987, May-June 1988, March-April 1988, June 1989, February-March 1990, and May June 1990 cruises -- Continued

Blank type	Calcium (mg/L)	Magnesium (mg/L)	Sodium (mg/L)	Silica (mg/L)
	March 25, 1989			
Deionized Water	<0.001	<0.001	0.022	0.38
Teflon sampler bag	0.009	0.007	2.5	0.84
Sieve	0.001	0.001	2.5	0.84
Splitter	0.005	0.002	2.8	0.81
Centrifuge effluent	0.031	0.009	2.8	0.81
Ultrafilter permeate	0.12	0.039	2.7	0.83
	March 31, 1989			
Deionized Water	<0.001	<0.001	0.11	0.048
Teflon sampler bag	0.23	0.16	4.3	0.82
Sieve	0.23	0.16	4.3	0.81
Splitter	0.3	0.21	5.3	1
Centrifuge effluent	0.3	0.2	5.3	1
Ultrafilter permeate	0.32	0.21	5.3	1
	June 6, 1989			
Deionized Water	0.006	0.001	0.041	0.073
Teflon sampler bag	4.1	1.1	1.7	0.37
Sieve	3.9	1.1	1.9	0.9
Splitter	3	0.85	1.7	0.6
Centrifuge effluent	3.3	0.94	1.9	0.7
Ultrafilter permeate	3.3	0.95	2	0.79
	June 21, 1989			
Deionized Water	1.1	0.41	6.5	1.2
Teflon sampler bag	0.7	0.26	4.2	0.77
Sieve	0.71	0.27	4.3	0.81
Splitter	0.86	0.32	5	1
Centrifuge effluent	0.96	0.35	5.3	1.1
Ultrafilter permeate	0.92	0.34	5.2	1
	June 27, 1989			
Deionized Water	0.46	0.28	9.1	1.8
Teflon sampler bag	0.42	0.25	8	1.6
Sieve	0.41	0.25	8	1.5
Splitter	0.59	0.36	9.2	1.9
Centrifuge effluent	0.6	0.36	9.4	1.8
Ultrafilter permeate	0.62	0.36	9.4	1.9
	March 13, 1990			
Deionized Water	0.004	0.002	12	4
Nuclepore filter	0.011	0.002	14	4.4
Sieve	0.005	0.002	12	3.8
Splitter	0.084	0.024	7.1	2.3
Centrifuge effluent	0.077	0.022	7	2.2
Ultrafilter permeate	0.26	0.071	7.1	2.3
	June 26, 1990			
Deionized Water	0.002	<0.001	7.6	2.7
Nuclepore filter	<0.001	<0.001	1.8	0.54
Sieve	0.006	0.001	12	3.6
Splitter	0.03	0.011	12	3.5
Centrifuge effluent	0.24	0.061	12	3.4
Ultrafilter permeate	0.28	0.084	12	3.5

[1]Processed using unstained Teflon-coated churn splitters.
[2]Processed using rust stained Teflon-coated churn splitters.

Table 11.-- Quality-control data for analyses of samples from the July-August 1987 cruise

Analyte	Published mean	Published standard deviation	Analytical mean	Analytical standard deviation
	U.S. Geological Survey's Standard Reference Water Sample T93[1]			
Aluminum	172	44	164	9.2
Arsenic	5.6	1.6	5.8	0.27
Barium	68.6	12	67	2.9
Beryllium	7.2	1.5	6.3	0.23
Cadmium	4.8	0.6	5.5	0.29
Chromium	9.8	2.8	5.3	4.6
Cobalt	5	1.2	5.7	0.34
Copper	30.6	3.6	31	1.4
Lead	11.2	3.5	11	0.37
Lithium	21.6	2.4	22	0.57
Manganese	99	4	101	5.1
Molybdenum	19.4	2.7	19	1
Nickel	11.8	3	19	1.9
Strontium	64	3	67	2
Thallium	2.1	0.6	2.3	0.3
Zinc	27.8	4.4	28	1.6
	U.S. Geological Survey's Standard Reference Water Sample T99[2]			
Calcium	202	15	200	1.6
Iron	0.137	0.029	0.13	0.006
Magnesium	113	7	110	1.7
Silica	10.9	0.7	11	0.15
Sodium	323	17	320	3.2
Strontium	3.9	0.2	3.8	0.038
	U.S. Environmental Protection Agency Survey Sample 1085[3]			
Chloride	8.3	0.97	7.9	0.17
Nitrate (as nitrogen)	2.0	0.1	2.0	0.0
Sulfate	33.8	1.68	34.1	0.14
	U.S. Geological Survey's Standard Reference Water Sample M2[4]			
Bicarbonate	170	1.2	171	0.4
Carbonate	1.7	0.01	1.7	0.0

[1]Inductively-coupled mass spectrometry data, sample population of 6; concentrations are in micrograms per liter
[2]Inductively-coupled atomic emission spectroscopy data, sample population of 11; concentrations are in milligrams per liter
[3]Ion chromatography data, sample population of 9; concentrations are in milligrams per liter
[4]Alkalinity data, sample population of 6; concentrations are in milligrams per liter

Table 12.-- Quality-control data for analyses of samples from the November-December 1987 cruise

Analyte	Published mean	Published standard deviation	Analytical mean	Analytical standard deviation
U.S. Geological Survey's Standard Reference Water Sample T93[1]				
Aluminum	172	44	160	9
Arsenic	5.6	1.6	5.2	0.3
Barium	68.6	12	67	2.7
Beryllium	7.2	1.5	6.1	0.6
Cadmium	4.8	0.6	5.2	0.28
Chromium	9.8	2.8	11	0.53
Cobalt	5	1.2	5.5	0.44
Copper	30.6	3.6	30	1.4
Lead	11.2	3.5	11	0.95
Lithium	21.6	2.4	22	0.91
Manganese	99	4	100	4.3
Molybdenum	19.4	2.7	18	0.5
Nickel	11.8	3	20	1
Strontium	64	3	64	2.3
Thallium	2.1	0.6	2	0.21
Zinc	27.8	4.4	27	1.1
U.S. Geological Survey's Standard Reference Water Sample T99[2]				
Calcium	202	15	200	1.3
Iron	0.137	0.029	0.14	0.002
Magnesium	113	7	110	0.74
Silica	10.9	0.7	11	0.05
Sodium	323	17	320	3.7
Strontium	3.9	0.2	3.8	0.023
U.S. Environmental Protection Agency Survey Sample 1085[3]				
Chloride	8.3	0.97	7.92	0.17
Nitrate (as nitrogen)	2.0	0.1	2.1	0.0
Sulfate	33.8	1.68	34.0	0.13
U.S. Geological Survey's Standard Reference Water Sample M2[4]				
Bicarbonate	170	1.2	171	1.6
Carbonate	1.7	0.01	0.5	0.3

[1]Inductively-coupled mass spectrometry data, sample population of 18; concentrations are in micrograms per liter
[2]Inductively-coupled atomic emission spectroscopy data, sample population of 11; concentrations are in milligrams per liter
[3]Ion chromatography data, sample population of 14; concentrations are in milligrams per liter
[4]Alkalinity data, sample population of 7; concentrations are in milligrams per liter

Table 13.-- Quality control data for analyses of samples from the May-June 1988 cruise

Analyte	Published mean	Published standard deviation	Analytical mean	Analytical standard deviation
U.S. Geological Survey's Standard Reference Water Sample T93[1]				
Aluminum	172	44	160	11
Arsenic	5.6	1.6	5.5	0.39
Barium	68.6	12	70	3.5
Beryllium	7.2	1.5	6.3	0.35
Cadmium	4.8	0.6	5.6	0.27
Chromium	9.8	2.8	10	0.69
Cobalt	5	1.2	5.7	0.36
Copper	30.6	3.6	31	1.8
Lead	11.2	3.5	12	0.37
Lithium	21.6	2.4	21	1.1
Manganese	99	4	99	6
Molybdenum	19.4	2.7	18	0.51
Nickel	11.8	3	19	1.3
Strontium	64	3	64	4.1
Thallium	2.1	0.6	2.3	0.12
Zinc	27.8	4.4	27	1.9
U.S. Geological Survey's Standard Reference Water Sample T99[2]				
Calcium	202	15	200	3
Iron	0.137	0.029	0.13	0.006
Magnesium	113	7	110	2.9
Silica	10.9	0.7	11	0.2
Sodium	323	17	320	20
Strontium	3.9	0.2	3.8	0.092
U.S. Environmental Protection Agency Survey Sample 1085[3]				
Chloride	8.3	0.97	8.0	0.15
Nitrate (as nitrogen)	2.0	0.1	2.1	0.0
Sulfate	33.8	1.68	34.0	0.12
U.S. Geological Survey's Standard Reference Water Sample M2[4]				
Bicarbonate	170	1.2	172	0.7
Carbonate	1.7	0.01	1.3	0.4

[1]Inductively-coupled mass spectrometry data, sample population of 19; concentrations are in micrograms per liter
[2]Inductively-coupled atomic emission spectroscopy data, sample population of 15; concentrations are in milligrams per liter
[3]Ion chromatography data, sample population of 11; concentrations are in milligrams per liter
[4]Alkalinity data, sample population of 4; concentrations are in milligrams per liter

Table 14.– Quality-control data for analyses of samples from the March-April 1989 cruise

Analyte	Published mean	Published standard deviation	Analytical mean	Analytical standard deviation
U.S. Geological Survey's Standard Reference Water Sample T103[1]				
Aluminum	127	14	128	7.4
Arsenic	3.2	0.9	3.2	0.6
Boron	120	39	105	5.2
Lithium	32.5	3.1	28	1.2
National Research Council Canada Riverine Water Reference Material for Trace Metals SLRS-1[2]				
Uranium	0.28	0.03	0.26	0.092
National Institute of Standards Trace Elements in Water Reference Material 1645b, 1-10 dilution[3]				
Barium	45	2	4.3	0.14
Beryllium	19	2	1.8	0.14
Cadmium	20	1	2	0.084
Chromium	19	0.4	1.7	0.3
Cobalt	26	1	2.7	0.17
Copper	22	0.4	1.7	0.46
Lead	24	0.7	2	0.1
Manganese	28	4	3	0.19
Molybdenum	86	3	10	0.32
Nickel	50	3	5	0.33
Thallium	8.1	0.2	0.67	0.06
Vanadium	46	0.4	4.5	0.39
Zinc	67	2	6.5	0.5
U.S. Geological Survey's Standard Reference Water Sample T101[4]				
Calcium	72.5	2.4	72	1.2
Iron	0.191	0.018	0.195	0.005
Magnesium	52.6	2.2	53	0.87
Silica	7	0.47	7	0.095
Sodium	96.8	4.1	97	1.7
Strontium	1.2	0.088	1.2	0.014
U.S. Geological Survey's Standard Reference Water Sample M106[5]				
Chloride	13	0.0	13.3	0.5
Sulfate	27.6	0.4	27.7	1.2
U.S. Geological Survey's Standard Reference Water Sample M112[5]				
Chloride	46	0.7	45.7	1.5
Sulfate	25	1.5	24.5	1.2
U.S. Geological Survey's Standard Reference Water Sample M86[6]				
Bicarbonate	180	1.4	182	1.0
Carbonate	1.8	0.01	1.1	0.4
U.S. Geological Survey's Standard Reference Water Sample M96[6]				
Bicarbonate	140	1.2	142	0.9
Carbonate	2.2	0.02	1.3	0.4

[1]Inductively-coupled mass spectrometry data, sample population of 11; concentrations are in micrograms per liter
[2]Inductively-coupled mass spectrometry data, sample population of 13; concentrations are in micrograms per liter
[3]Inductively-coupled mass spectrometry data, sample population of 10; concentrations are in micrograms per liter
[4]Inductively-coupled atomic emission spectroscopy data, sample population of 33; concentrations are in milligrams per liter
[5]Ion chromatography data, sample population of 13; concentrations are in milligrams per liter
[6]Alkalinity data, sample population of 14; concentrations are in milligrams per liter

Table 15.-- Quality-control data for analyses of samples from the June 1989 cruise

Analyte	Published mean	Published standard deviation	Analytical mean	Analytical standard deviation
U.S. Geological Survey's Standard Reference Water Sample T103[1]				
Aluminum	127	14	136	10
Arsenic	3.2	0.9	3.7	0.41
Boron	120	39	108	12
Lithium	32.5	3.1	29	2.3
National Research Council Canada Riverine Water Reference Material for Trace Metals SLRS-1[2]				
Uranium	0.28	0.03	0.33	0.073
National Institute of Standards Trace Elements in Water Reference Material 1645b, 1-10 dilution[3]				
Barium	45	2	4.3	0.23
Beryllium	19	2	1.8	0.16
Cadmium	20	1	2.1	0.15
Chromium	19	0.4	1.9	0.64
Cobalt	26	1	2.8	0.26
Copper	22	0.4	2	0.18
Lead	24	0.7	2.1	0.13
Manganese	28	4	3	0.29
Molybdenum	86	3	10	0.43
Nickel	50	3	5.2	0.39
Thallium	8.1	0.2	0.71	0.06
Vanadium	46	0.4	4.6	0.47
Zinc	67	2	7	0.63
U.S. Geological Survey's Standard Reference Water Sample T101[4]				
Calcium	72.5	2.4	72	2.9
Iron	0.191	0.018	0.192	0.01
Magnesium	52.6	2.2	55	2.3
Silica	7	0.47	7.5	0.36
Sodium	96.8	4.1	97	3.5
Strontium	1.2	0.088	1.2	0.046
U.S. Geological Survey's Standard Reference Water Sample M106[5]				
Chloride	13	0.0	13.1	0.3
Sulfate	27.6	0.4	27.7	0.5
U.S. Geological Survey's Standard Reference Water Sample M112[5]				
Chloride	46	0.7	47.2	1.2
Sulfate	25	1.5	24.6	0.4
U.S. Geological Survey's Standard Reference Water Sample M86[6]				
Bicarbonate	180	1.4	182	0.8
Carbonate	1.8	0.01	1.8	0.01
U.S. Geological Survey's Standard Reference Water Sample M96[6]				
Bicarbonate	140	1.2	141	1.0
Carbonate	2.2	0.02	1.7	0.6

[1]Inductively-coupled mass spectrometry data, sample population of 15; concentrations are in micrograms per liter
[2]Inductively-coupled mass spectrometry data, sample population of 13; concentrations are in micrograms per liter
[3]Inductively-coupled mass spectrometry data, sample population of 11; concentrations are in micrograms per liter
[4]Inductively-coupled atomic emission spectroscopy data, sample population of 24; concentrations are in milligrams per liter
[5]Ion chromatography data, sample population of 14; concentrations are in milligrams per liter
[6]Alkalinity data, sample population of 6; concentrations are in milligrams per liter

Table 16.-- Quality-control data for analyses of samples from the February-March 1990 cruise

Analyte	Published mean	Published standard deviation	Analytical mean	Analytical standard deviation
U.S. Geological Survey's Standard Reference Water Sample T103[1]				
Aluminum	127	14	139	13
Arsenic	3.2	0.9	3.5	0.54
Boron	120	39	105	15
Lithium	32.5	3.1	29	2.6
National Research Council Canada Riverine Water Reference Material for Trace Metals SLRS-1[2]				
Uranium	0.28	0.03	0.20	0.18
National Institute of Standards Trace Elements in Water Reference Material 1645b, 1-10 dilution[2]				
Barium	45	2	4.2	0.18
Beryllium	19	2	1.9	0.19
Cadmium	20	1	2.1	0.2
Chromium	19	0.4	1.7	0.21
Cobalt	26	1	2.8	0.16
Copper	22	0.4	2	0.16
Lead	24	0.7	1.9	0.3
Manganese	28	4	3	0.15
Molybdenum	86	3	10	0.26
Nickel	50	3	5.3	0.43
Thallium	8.1	0.2	0.64	0.12
Vanadium	46	0.4	4.4	0.35
Zinc	67	2	7.2	0.51
U.S. Geological Survey's Standard Reference Water Sample T101[3]				
Calcium	72.5	2.4	69	4.2
Iron	0.191	0.018	0.193	0.012
Magnesium	52.6	2.2	54	2.8
Silica	7	0.47	7.3	0.34
Sodium	96.8	4.1	93	5.5
Strontium	1.2	0.088	1.1	0.072
U.S. Geological Survey's Standard Reference Water Sample P12[4]				
Chloride	0.66	0.04	0.74	0.04
Sulfate	0.65	0.13	0.67	0.01
U.S. Geological Survey's Standard Reference Water Sample P11[4]				
Nitrate as Nitrogen	0.29	0.01	0.29	0.005
U.S. Geological Survey's Standard Reference Water Sample M96[5]				
Bicarbonate	140	1.2	142	1.0
Carbonate	2.2	0.02	1.2	0.5

[1]Inductively-coupled mass spectrometry data, sample population of 11; concentrations are in micrograms per liter
[2]Inductively-coupled mass spectrometry data, sample population of 8; concentrations are in micrograms per liter
[3]Inductively-coupled atomic emission spectroscopy data, sample population of 18; concentrations are in milligrams per liter
[4]Ion chromatography data, sample population of 15; concentrations are in milligrams per liter; samples were diluted to range of the standards in order to simultaneously analyze for nitrate as well as chloride and sulfate.
[5]Alkalinity data, sample population of 11; concentrations are in milligrams per liter

Table 17.-- Quality-control data for analyses of samples from the May-June 1990 cruise

Analyte	Published mean	Published standard deviation	Analytical mean	Analytical standard deviation
U.S. Geological Survey's Standard Reference Water Sample T103[1]				
Aluminum	127	14	137	5
Arsenic	3.2	0.9	3	0.52
Boron	120	39	109	8
Lithium	32.5	3.1	30	1.2
National Research Council Canada Riverine Water Reference Material for Trace Metals SLRS-1[2]				
Uranium	0.28	0.03	0.26	0.073
National Institute of Standards Trace Elements in Water Reference Material 1645b, 1-10 dilution[2]				
Barium	45	2	4.3	0.16
Beryllium	19	2	1.9	0.18
Cadmium	20	1	2.2	0.21
Chromium	19	0.4	1.8	0.067
Cobalt	26	1	2.9	0.09
Copper	22	0.4	2	0.059
Lead	24	0.7	2	0.097
Manganese	28	4	3.2	0.094
Molybdenum	86	3	10	0.37
Nickel	50	3	5.3	0.26
Thallium	8.1	0.2	0.72	0.061
Vanadium	46	0.4	4.7	0.17
Zinc	67	2	7.2	0.38
U.S. Geological Survey's Standard Reference Water Sample T107[3]				
Calcium	11.7	0.7	12	0.27
Iron	0.052	0.007	0.053	0.004
Magnesium	2.1	0.13	2.2	0.071
Silica	7.7	0.5	8.3	0.15
Sodium	20.7	1.1	23	0.52
Strontium	0.061	0.004	0.064	0.002
U.S. Geological Survey's Standard Reference Water Sample P12[4]				
Chloride	0.66	0.04	0.68	0.02
Sulfate	0.65	0.13	0.63	0.01
U.S. Geological Survey's Standard Reference Water Sample P11[4]				
Nitrate as Nitrogen	0.29	0.01	0.28	0.005
U.S. Geological Survey's Standard Reference Water Sample M96[5]				
Bicarbonate	140	1.2	141	1.3
Carbonate	2.2	0.02	1.0	0.4

[1]Inductively-coupled mass spectrometry data, sample population of 8; concentrations are in micrograms per liter
[2]Inductively-coupled mass spectrometry data, sample population of 6; concentrations are in micrograms per liter
[3]Inductively-coupled atomic emission spectroscopy data, sample population of 29; concentrations are in milligrams per liter
[4]Ion chromatography data, sample population of 12; concentrations are in milligrams per liter; samples were diluted to range of the standards in order to simultaneously analyze for nitrate as well as chloride and sulfate.
[5]Alkalinity data, sample population of 18; concentrations are in milligrams per liter

Table 18.-- Concentration data for dissolved trace elements in water samples collected from the Mississippi River and some of its tributaries during the July-August 1987 cruise

[A, Composite A; B, Composite B; --, not determined; <, less than the detection limit; All results are in micrograms per liter, except for iron and strontium, which are in milligrams per liter]

Date		Aluminum			Arsenic			Barium			Beryllium		
1987	Sampling site	A	B	Grab	A	B	Grab	A	B	Grab	A	B	Grab
7-17	Illinois River below Meredosia, Ill.	87	--	2000	5	--	4.5	59	--	70	<0.02	--	<0.02
7-18	Mississippi River near Winfield, Mo.	15	--	15	3.3	--	3.3	71	--	73	<0.02	--	<0.02
7-20	Missouri River at Hermann, Mo.	--	17	--	3.1	2.7	--	130	130	--	<0.02	<0.02	--
7-21	Mississippi River at Hartford, Ill.	23	40	--	3.1	3	--	70	71	--	<0.02	<0.02	--
7-22	Mississippi River at St. Louis, Mo.	39	12	--	2.8	2.7	--	110	110	--	<0.02	<0.02	--
7-23	Mississippi River at Chester, Ill.	33	--	--	2.8	2.8	--	110	110	--	<0.02	<0.02	--
7-26	Ohio River below Smithland Locks and Dam, Ill.-Ky.	8.8	--	--	1.3	--	--	53	--	--	<0.02	--	--
7-27	Ohio River at Olmsted, Ill.	11	8.2	--	1.3	1.3	--	39	39	--	<0.02	<0.02	--
7-28	Mississippi River below Hickman, Ky.	12	7.8	--	3.9	2.7	--	100	94	--	0.046	0.054	--
7-28	Mississippi River above Hatchie River, Tenn.	--	--	16	--	--	2.4	--	--	81	--	--	0.04
7-28	Hatchie River at Highway 61 bridge, Tenn.	--	--	34	--	--	1.1	--	--	29	--	--	0.032
7-30	Mississippi River at Helena, Ark.	8.9	13	--	2	2	--	76	77	--	<0.02	<0.02	--
7-31	White River at Mile 11.5, Ark.	9.7	5.8	--	1	1.1	--	43	38	--	0.024	0.17	--
8-01	Arkansas River at Mile 55.9, Ark.	6.9	5.1	--	6.3	6.4	--	120	120	--	0.2	0.2	--
8-02	Mississippi River above Arkansas City, Ark.	2.2	5.9	--	2.7	3.2	--	78	79	--	0.19	0.19	--
8-04	Yazoo River at Highway 61, Miss.	--	--	2.4	--	--	2.4	--	--	83	--	--	0.19
8-04	Mississippi River below Vicksburg, Miss.	--	4.8	--	2.4	2.3	--	86	81	--	<0.02	<0.02	--
8-06	Old River Outflow Channel near Knox Landing, La.	2.3	1.8	--	2.5	2.5	--	74	73	--	0.19	0.19	--
8-07	Mississippi River near St. Francisville, La.	5.3	5.8	--	2.1	2.2	--	74	74	--	0.029	<0.02	--
8-08	Mississippi River at Plaquemine, La.	--	--	4.4	--	--	2.5	--	--	74	--	--	0.19
8-08	Mississippi River at Union, La.	--	--	2.7	--	--	2.5	--	--	73	--	--	0.19
8-08	Mississippi River at Luling Bridge, La.	--	--	3	--	--	2.6	--	--	72	--	--	0.19
8-09	Mississippi River below Belle Chasse, La.	1.7	--	--	2.5	--	--	75	--	--	0.2	--	--

Table 18.-- Concentration data for dissolved trace elements in water samples collected from the Mississippi River and some of its tributaries during the July-August 1987 cruise -- Continued

Date		Boron			Cadmium			Cobalt			Chromium		
1987	Sampling site	A	B	Grab	A	B	Grab	A	B	Grab	A	B	Grab
7-17	Illinois River below Meredosia, Ill.	170	--	150	0.21	--	0.16	<0.008	--	<0.008	1	--	3
7-18	Mississippi River near Winfield, Mo.	49	--	47	5.8	--	0.18	0.022	--	0.032	1.1	--	1.2
7-20	Missouri River at Hermann, Mo.	55	51	--	0.23	0.26	--	<0.008	<0.008	--	1.8	1.1	--
7-21	Mississippi River at Hartford, Ill.	57	55	--	0.35	0.56	--	<0.008	<0.008	--	0.93	1.2	--
7-22	Mississippi River at St. Louis, Mo.	44	45	--	0.15	0.19	--	<0.008	<0.008	--	0.79	1.1	--
7-23	Mississippi River at Chester, Ill.	43	44	--	0.16	0.18	--	<0.008	<0.008	--	0.79	1	--
7-26	Ohio River below Smithland Locks and Dam, Ill.-Ky.	68	--	--	<0.1	--	--	<0.008	--	--	0.3	--	--
7-27	Ohio River at Olmsted, Ill.	45	46	--	--	<0.1	--	<0.008	<0.008	--	0.36	0.47	--
7-28	Mississippi River below Hickman, Ky.	88	100	--	--	0.34	--	--	0.081	--	1.4	1	--
7-28	Mississippi River above Hatchie River, Tenn.	--	--	68	--	--	2.4	--	--	0.12	--	--	0.87
7-28	Hatchie River at Highway 61 bridge, Tenn.	--	--	29	--	--	0.27	--	--	0.16	--	--	1.6
7-30	Mississippi River at Helena, Ark.	58	53	--	0.49	0.6	--	<0.008	<0.008	--	0.43	0.31	--
7-31	White River at Mile 11.5, Ark.	15	13	--	0.18	0.39	--	0.069	0.22	--	0.36	0.66	--
8-01	Arkansas River at Mile 55.9, Ark.	88	86	--	0.66	0.47	--	0.43	0.39	--	3.7	2.8	--
8-02	Mississippi River above Arkansas City, Ark.	65	64	--	1.4	0.52	--	0.3	0.18	--	1.1	0.91	--
8-04	Yazoo River at Highway 61, Miss.	--	--	28	--	--	0.49	--	--	0.29	--	--	0.54
8-04	Mississippi River below Vicksburg, Miss.	50	50	--	0.86	0.11	--	<0.008	<0.008	--	0.86	0.33	--
8-06	Old River Outflow Channel near Knox Landing, La.	60	60	--	1.3	1.3	--	0.3	0.19	--	0.77	0.74	--
8-07	Mississippi River near St. Francisville, La.	47	47	--	0.83	0.4	--	<0.008	<0.008	--	<0.2	<0.2	--
8-08	Mississippi River at Plaquemine, La.	--	--	58	--	--	0.61	--	--	0.23	--	--	1
8-08	Mississippi River at Union, La.	--	--	57	--	--	0.48	--	--	0.18	--	--	0.9
8-08	Mississippi River at Luling Bridge, La.	--	--	56	--	--	0.47	--	--	0.25	--	--	0.79
8-09	Mississippi River below Belle Chasse, La.	62	--	--	0.41	--	--	0.22	--	--	0.71	--	--

Table 18.-- Concentration data for dissolved trace elements in water samples collected from the Mississippi River and some of its tributaries during the July-August 1987 cruise -- Continued

Date		Copper			Iron			Lead			Lithium		
1987	Sampling site	A	B	Grab	A	B	Grab	A	B	Grab	A	B	Grab
7-17	Illinois River below Meredosia, Ill.	<0.02	--	<0.02	0.11	--	2.1	0.74	--	3.7	7.6	--	7.9
7-18	Mississippi River near Winfield, Mo.	2.9	--	2.6	0.018	--	0.005	1.1	--	0.66	7.9	--	8.1
7-20	Missouri River at Hermann, Mo.	4.3	3.5	--	0.22	0.009	--	0.76	0.8	--	19	18	--
7-21	Mississippi River at Hartford, Ill.	2.7	3	--	<0.005	0.009	--	0.7	0.88	--	6.7	6.7	--
7-22	Mississippi River at St. Louis, Mo.	2.2	2.3	--	0.023	<0.005	--	0.51	0.58	--	13	12	--
7-23	Mississippi River at Chester, Ill.	2.2	2.4	--	0.015	--	--	0.65	0.66	--	12	12	--
7-26	Ohio River below Smithland Locks and Dam, Ill.-Ky.	1.8	--	--	<0.005	--	--	0.3	--	--	4.7	--	--
7-27	Ohio River at Olmsted, Ill.	5	1.2	--	<0.005	<0.005	--	--	0.28	--	3.2	3.3	--
7-28	Mississippi River below Hickman, Ky.	5.2	2.5	--	<0.005	<0.005	--	--	8.6	--	14	14	--
7-28	Mississippi River above Hatchie River, Tenn.	--	--	2.6	--	--	0.005	--	--	0.47	--	--	9.6
7-28	Hatchie River at Highway 61 bridge, Tenn.	--	--	2.1	--	--	0.047	--	--	0.2	--	--	0.85
7-30	Mississippi River at Helena, Ark.	2	2	--	0.005	0.006	--	6.5	2.5	--	8.6	7.9	--
7-31	White River at Mile 11.5, Ark.	1	1.5	--	<0.005	<0.005	--	0.32	0.24	--	0.58	0.69	--
8-01	Arkansas River at Mile 55.9, Ark.	4.3	3.9	--	<0.005	<0.005	--	0.44	0.29	--	9.7	9.6	--
8-02	Mississippi River above Arkansas City, Ark.	4.2	2.5	--	<0.005	<0.005	--	0.39	0.58	--	11	9.9	--
8-04	Yazoo River at Highway 61, Miss.	--	--	2.2	--	--	<0.005	--	--	0.83	--	--	3
8-04	Mississippi River below Vicksburg, Miss.	2.4	1.8	--	0.44	<0.005	--	0.82	0.2	--	8.4	8.2	--
8-06	Old River Outflow Channel near Knox Landing, La.	3.2	3.1	--	<0.005	<0.005	--	0.54	0.5	--	9.3	9.3	--
8-07	Mississippi River near St. Francisville, La.	2.3	2.3	--	<0.005	<0.005	--	0.27	0.21	--	8.6	8.7	--
8-08	Mississippi River at Plaquemine, La.	--	--	3.3	--	--	<0.005	--	--	0.48	--	--	8.5
8-08	Mississippi River at Union, La.	--	--	2.7	--	--	<0.005	--	--	0.2	--	--	8.4
8-08	Mississippi River at Luling Bridge, La.	--	--	2.9	--	--	<0.005	--	--	0.18	--	--	8.4
8-09	Mississippi River below Belle Chasse, La.	2.7	--	--	<0.005	--	--	0.2	--	--	9.3	--	--

Table 18.-- Concentration data for dissolved trace elements in water samples collected from the Mississippi River and some of its tributaries during the July-August 1987 cruise -- Continued

Date		Manganese			Molybdenum			Nickel			Strontium		
1987	Sampling site	A	B	Grab	A	B	Grab	A	B	Grab	A	B	Grab
7-17	Illinois River below Meredosia, Ill.	9	--	110	7.9	--	6.3	<0.03	--	<0.03	0.21	--	0.19
7-18	Mississippi River near Winfield, Mo.	0.45	--	0.28	2.3	--	2.3	0.55	--	0.33	0.12	--	0.12
7-20	Missouri River at Hermann, Mo.	--	0.17	--	3	3.1	--	<0.03	<0.03	--	0.27	0.27	--
7-21	Mississippi River at Hartford, Ill.	0.44	1.3	--	3	2.8	--	<0.03	<0.03	--	0.13	0.13	--
7-22	Mississippi River at St. Louis, Mo.	0.71	0.29	--	3.2	3.2	--	<0.03	<0.03	--	0.22	0.23	--
7-23	Mississippi River at Chester, Ill.	0.53	--	--	3.1	2.9	--	<0.03	<0.03	--	0.22	--	--
7-26	Ohio River below Smithland Locks and Dam, Ill.-Ky.	0.36	--	--	3.3	--	--	0.43	--	--	0.23	--	--
7-27	Ohio River at Olmsted, Ill.	<0.06	<0.06	--	2.5	2.7	--	<0.03	<0.03	--	0.17	0.17	--
7-28	Mississippi River below Hickman, Ky.	0.59	<0.06	--	4.2	3.9	--	9.9	2.3	--	0.22	0.22	--
7-28	Mississippi River above Hatchie River, Tenn.	--	--	0.9	--	--	3.4	--	--	3.4	--	--	0.2
7-28	Hatchie River at Highway 61 bridge, Tenn.	--	--	97	--	--	0.68	--	--	1.8	--	--	0.043
7-30	Mississippi River at Helena, Ark.	0.42	<0.06	--	2.7	2.7	--	0.93	<0.03	--	0.2	0.2	--
7-31	White River at Mile 11.5, Ark.	<0.06	0.73	--	1.3	1.3	--	--	<0.03	--	0.043	0.042	--
8-01	Arkansas River at Mile 55.9, Ark.	1	0.92	--	2	1.9	--	0.7	0.85	--	0.46	0.47	--
8-02	Mississippi River above Arkansas City, Ark.	1.1	0.89	--	3.2	3.1	--	--	<0.03	--	0.23	0.23	--
8-04	Yazoo River at Highway 61, Miss.	--	--	96	--	--	2	--	--	<0.03	--	--	0.12
8-04	Mississippi River below Vicksburg, Miss.	--	<0.06	--	2.3	2.4	--	<0.03	<0.03	--	0.23	0.23	--
8-06	Old River Outflow Channel near Knox Landing, La.	0.92	0.69	--	3	3	--	1.2	0.59	--	0.23	0.23	--
8-07	Mississippi River near St. Francisville, La.	0.13	1.1	--	3.5	3.5	--	<0.03	<0.03	--	0.23	0.23	--
8-08	Mississippi River at Plaquemine, La.	--	--	0.96	--	--	3	--	--	<0.03	--	--	0.22
8-08	Mississippi River at Union, La.	--	--	0.86	--	--	2.9	--	--	<0.03	--	--	0.22
8-08	Mississippi River at Luling Bridge, La.	--	--	0.76	--	--	3	--	--	<0.03	--	--	0.21
8-09	Mississippi River below Belle Chasse, La.	0.56	--	--	3	--	--	0.2	--	--	0.23	--	--

Table 18.-- Concentration data for dissolved trace elements in water samples collected from the Mississippi River and some of its tributaries during the July-August 1987 cruise -- Continued

Date		Thallium			Uranium			Vanadium			Zinc		
1987	Sampling site	A	B	Grab	A	B	Grab	A	B	Grab	A	B	Grab
7-17	Illinois River below Meredosia, Ill.	0.4	--	0.39	<0.06	--	<0.06	7.9	--	9.6	<0.08	--	<0.08
7-18	Mississippi River near Winfield, Mo.	0.16	--	0.15	2	--	2.1	3.3	--	3.1	13	--	3.5
7-20	Missouri River at Hermann, Mo.	0.17	0.17	--	2.2	2.2	--	2.9	1.9	--	3.9	3	--
7-21	Mississippi River at Hartford, Ill.	0.18	0.18	--	1.6	1.6	--	2.6	2.5	--	2.2	2.3	--
7-22	Mississippi River at St. Louis, Mo.	0.18	0.2	--	2.2	2.1	--	1.8	1.8	--	0.95	0.99	--
7-23	Mississippi River at Chester, Ill.	0.2	0.2	--	2.1	2.1	--	1.7	2.1	--	1.4	1.7	--
7-26	Ohio River below Smithland Locks and Dam, Ill.-Ky.	<0.05	--	--	0.44	--	--	0.57	--	--	2.1	--	--
7-27	Ohio River at Olmsted, Ill.	<0.05	<0.05	--	0.22	0.22	--	0.7	0.75	--	2	1.1	--
7-28	Mississippi River below Hickman, Ky.	0.47	0.49	--	2.7	2.7	--	<0.07	<0.07	--	--	1.8	--
7-28	Mississippi River above Hatchie River, Tenn.	--	--	0.44	--	--	2	--	--	<0.07	--	--	2.1
7-28	Hatchie River at Highway 61 bridge, Tenn.	--	--	0.37	--	--	0.18	--	--	<0.07	--	--	1.3
7-30	Mississippi River at Helena, Ark.	<0.05	<0.05	--	1.2	1.2	--	2.1	2.2	--	3.1	2.5	--
7-31	White River at Mile 11.5, Ark.	0.39	<0.05	--	1.1	0.45	--	<0.07	<0.07	--	0.54	0.88	--
8-01	Arkansas River at Mile 55.9, Ark.	<0.05	<0.05	--	2.1	2.2	--	15	15	--	2	1.5	--
8-02	Mississippi River above Arkansas City, Ark.	<0.05	<0.05	--	1.7	2.1	--	<0.07	--	--	--	0.97	--
8-04	Yazoo River at Highway 61, Miss.	--	--	<0.05	--	--	1.7	--	--	0.12	--	--	2
8-04	Mississippi River below Vicksburg, Miss.	<0.05	<0.05	--	1.4	1.4	--	2.7	1.7	--	5	1.3	--
8-06	Old River Outflow Channel near Knox Landing, La.	<0.05	<0.05	--	10	<0.06	--	<0.07	<0.07	--	4.6	5.3	--
8-07	Mississippi River near St. Francisville, La.	0.15	0.14	--	<0.06	<0.06	--	<0.07	<0.07	--	6.1	2.2	--
8-08	Mississippi River at Plaquemine, La.	--	--	<0.05	--	--	1.2	--	--	<0.07	--	--	2.4
8-08	Mississippi River at Union, La.	--	--	<0.05	--	--	1	--	--	<0.07	--	--	1
8-08	Mississippi River at Luling Bridge, La.	--	--	<0.05	--	--	1.1	--	--	<0.07	--	--	1.3
8-09	Mississippi River below Belle Chasse, La.	<0.05	--	--	0.98	--	--	<0.07	--	--	4.6	--	--

Table 19.-- Concentration data for dissolved trace elements in water samples collected from the Mississippi River and some of its tributaries during the November-December 1987 cruise

[A, Composite A; B, Composite B; --, not determined; <, less than the detection limit; All results are in micrograms per liter, except for iron and strontium, which are in milligrams per liter]

Date		Aluminum			Arsenic			Barium		
1987	Sampling site	A	B	Grab	A	B	Grab	A	B	Grab
11-29	Illinois River below Meredosia, Ill.	6.7	--	--	2.7	--	--	46	--	--
11-30	Mississippi River near Winfield, Mo.	7.3	7.8	--	1.2	1.2	--	46	46	--
12-02	Missouri River at St. Charles, Mo.	2.1	7.7	--	1.7	1.7	--	100	100	--
12-03	Mississippi River at St. Louis, Mo.	13	6.8	--	1.7	1.7	--	75	73	--
12-05	Mississippi River at Thebes, Ill.	30	24	--	1.6	1.7	--	79	78	--
12-06	Ohio River at Olmsted, Ill.	36	42	--	1.3	1.2	--	41	40	--
12-07	Mississippi River below Hickman, Ky.	5.6	8.8	--	1.2	1.2	--	61	63	--
12-08	Mississippi River at Fulton, Tenn.	1.6	4.3	--	1.3	1.4	--	65	68	--
12-11	Mississippi River at Helena, Ark.	13	15	--	0.85	0.92	--	66	67	--
12-12	White River at Mile 11.5, Ark.	14	10	--	<0.6	<0.6	--	40	40	--
12-13	Mississippi River above Arkansas City, Ark.	<0.2	<0.2	--	1.6	1.8	--	70	73	--
12-14	Yazoo River at Mile 10, Miss.	43	--	--	1.1	--	--	31	--	--
12-15	Mississippi River below Vicksburg, Miss.	62	54	--	1.3	1.3	--	70	73	--
12-17	Old River Outflow Channel near Knox Landing, La.	5.4	5.2	--	1.4	1.4	--	74	72	--
12-18	Mississippi River near St. Francisville, La.	3.1	20	--	1.5	1.3	--	72	72	--
12-20	Mississippi River below Belle Chasse, La.	16	22	--	1.5	1.6	--	71	75	--

Table 19.-- Concentration data for dissolved trace elements in water samples collected from the Mississippi River and some of its tributaries during the November-December 1987 cruise -- Continued

Date		Beryllium			Boron			Cadmium		
1987	Sampling site	A	B	Grab	A	B	Grab	A	B	Grab
11-29	Illinois River below Meredosia, Ill.	<0.02	--	--	140	--	--	0.11	--	--
11-30	Mississippi River near Winfield, Mo.	<0.02	<0.02	--	30	29	--	<0.1	<0.1	--
12-02	Missouri River at St. Charles, Mo.	<0.02	<0.02	--	73	70	--	<0.1	<0.1	--
12-03	Mississippi River at St. Louis, Mo.	<0.02	<0.02	--	63	59	--	0.39	<0.1	--
12-05	Mississippi River at Thebes, Ill.	<0.02	<0.02	--	53	50	--	<0.1	<0.1	--
12-06	Ohio River at Olmsted, Ill.	<0.02	<0.02	--	55	49	--	0.12	<0.1	--
12-07	Mississippi River below Hickman, Ky.	<0.02	<0.02	--	59	58	--	1.6	<0.1	--
12-08	Mississippi River at Fulton, Tenn.	<0.02	<0.02	--	58	60	--	<0.1	<0.1	--
12-11	Mississippi River at Helena, Ark.	<0.02	<0.02	--	55	58	--	<0.1	<0.1	--
12-12	White River at Mile 11.5, Ark.	<0.02	<0.02	--	8.5	7.9	--	<0.1	<0.1	--
12-13	Mississippi River above Arkansas City, Ark.	<0.02	<0.02	--	51	50	--	<0.1	<0.1	--
12-14	Yazoo River at Mile 10, Miss.	0.068	--	--	18	--	--	0.64	--	--
12-15	Mississippi River below Vicksburg, Miss.	<0.02	<0.02	--	52	54	--	0.1	0.14	--
12-17	Old River Outflow Channel near Knox Landing, La.	<0.02	<0.02	--	54	52	--	0.16	<0.1	--
12-18	Mississippi River near St. Francisville, La.	<0.02	<0.02	--	52	51	--	<0.1	0.19	--
12-20	Mississippi River below Belle Chasse, La.	<0.02	<0.02	--	49	52	--	0.17	<0.1	--

Table 19.-- Concentration data for dissolved trace elements in water samples collected from the Mississippi River and some of its tributaries during the November-December 1987 cruise -- Continued

Date		Chromium			Cobalt			Copper		
1987	Sampling site	A	B	Grab	A	B	Grab	A	B	Grab
11-29	Illinois River below Meredosia, Ill.	0.54	--	--	<0.008	--	--	1.9	--	--
11-30	Mississippi River near Winfield, Mo.	0.32	0.44	--	<0.008	<0.008	--	0.64	0.7	--
12-02	Missouri River at St. Charles, Mo.	<0.2	0.31	--	<0.008	<0.008	--	1	1.2	--
12-03	Mississippi River at St. Louis, Mo.	1.1	0.37	--	<0.008	<0.008	--	1.5	1	--
12-05	Mississippi River at Thebes, Ill.	0.45	0.37	--	<0.008	<0.008	--	1.2	0.98	--
12-06	Ohio River at Olmsted, Ill.	0.58	0.64	--	<0.008	<0.008	--	--	1.5	--
12-07	Mississippi River below Hickman, Ky.	0.46	0.5	--	<0.008	<0.008	--	1.1	1	--
12-08	Mississippi River at Fulton, Tenn.	0.34	0.41	--	<0.008	<0.008	--	1.1	0.94	--
12-11	Mississippi River at Helena, Ark.	<0.2	<0.2	--	<0.008	<0.008	--	0.6	0.6	--
12-12	White River at Mile 11.5, Ark.	0.27	<0.2	--	<0.008	<0.008	--	0.73	0.44	--
12-13	Mississippi River above Arkansas City, Ark.	8.6	7.5	--	<0.008	<0.008	--	0.99	1	--
12-14	Yazoo River at Mile 10, Miss.	0.53	--	--	0.029	--	--	1.6	--	--
12-15	Mississippi River below Vicksburg, Miss.	0.97	0.59	--	<0.008	<0.008	--	1.3	1.8	--
12-17	Old River Outflow Channel near Knox Landing, La.	0.75	0.57	--	<0.008	<0.008	--	1.9	1.3	--
12-18	Mississippi River near St. Francisville, La.	0.62	0.54	--	<0.008	<0.008	--	1.2	1.8	--
12-20	Mississippi River below Belle Chasse, La.	0.52	0.72	--	<0.008	<0.008	--	1.8	1.5	--

Table 19.-- Concentration data for dissolved trace elements in water samples collected from the Mississippi River and some of its tributaries during the November-December 1987 cruise -- Continued

Date		Iron			Lead			Lithium		
1987	Sampling site	A	B	Grab	A	B	Grab	A	B	Grab
11-29	Illinois River below Meredosia, Ill.	0.006	--	--	0.3	--	--	6.9	--	--
11-30	Mississippi River near Winfield, Mo.	0.009	0.01	--	0.12	0.087	--	4	4.2	--
12-02	Missouri River at St. Charles, Mo.	<0.005	0.008	--	<0.06	0.22	--	25	25	--
12-03	Mississippi River at St. Louis, Mo.	0.018	0.005	--	--	0.092	--	15	15	--
12-05	Mississippi River at Thebes, Ill.	0.023	0.006	--	0.31	0.16	--	14	15	--
12-06	Ohio River at Olmsted, Ill.	0.038	0.041	--	--	0.13	--	6.2	5.9	--
12-07	Mississippi River below Hickman, Ky.	0.005	<0.005	--	0.065	<0.06	--	9	9.2	--
12-08	Mississippi River at Fulton, Tenn.	<0.005	<0.005	--	0.098	0.11	--	9.6	10	--
12-11	Mississippi River at Helena, Ark.	0.012	0.011	--	0.27	<0.06	--	9.3	9.9	--
12-12	White River at Mile 11.5, Ark.	0.016	0.009	--	0.27	0.32	--	0.33	0.32	--
12-13	Mississippi River above Arkansas City, Ark.	<0.005	<0.005	--	<0.06	<0.06	--	8.3	8.7	--
12-14	Yazoo River at Mile 10, Miss.	0.067	0.091	--	0.23	--	--	0.81	--	--
12-15	Mississippi River below Vicksburg, Miss.	0.068	0.054	--	0.18	0.24	--	7.6	7.9	--
12-17	Old River Outflow Channel near Knox Landing, La.	0.006	<0.005	--	0.2	0.13	--	8	7.9	--
12-18	Mississippi River near St. Francisville, La.	<0.005	0.014	--	0.08	--	--	8.1	8.2	--
12-20	Mississippi River below Belle Chasse, La.	0.01	0.012	--	0.33	0.18	--	8.4	8.7	--

Table 19.-- Concentration data for dissolved trace elements in water samples collected from the Mississippi River and some of its tributaries during the November-December 1987 cruise -- Continued

Date		Manganese			Molybdenum			Nickel		
1987	Sampling site	A	B	Grab	A	B	Grab	A	B	Grab
11-29	Illinois River below Meredosia, Ill.	0.41	--	--	4.7	--	--	7.6	--	--
11-30	Mississippi River near Winfield, Mo.	1.2	2	--	0.99	1	--	2.7	2.1	--
12-02	Missouri River at St. Charles, Mo.	0.7	0.79	--	2.4	2.2	--	<0.03	<0.03	--
12-03	Mississippi River at St. Louis, Mo.	0.67	0.39	--	1.8	1.8	--	3.5	4	--
12-05	Mississippi River at Thebes, Ill.	2.3	0.9	--	1.8	1.8	--	4.5	3.6	--
12-06	Ohio River at Olmsted, Ill.	5.7	6.7	--	3.7	3.9	--	1.6	<0.03	--
12-07	Mississippi River below Hickman, Ky.	0.73	--	--	3	2.7	--	0.69	0.075	--
12-08	Mississippi River at Fulton, Tenn.	0.16	0.15	--	2.7	2.9	--	<0.03	0.57	--
12-11	Mississippi River at Helena, Ark.	1.1	1.2	--	2.9	2.7	--	<0.03	<0.03	--
12-12	White River at Mile 11.5, Ark.	1.5	0.68	--	0.32	0.31	--	<0.03	0.078	--
12-13	Mississippi River above Arkansas City, Ark.	<0.06	<0.06	--	2.6	2.7	--	1.9	3.8	--
12-14	Yazoo River at Mile 10, Miss.	32	--	--	0.17	--	--	1.1	--	--
12-15	Mississippi River below Vicksburg, Miss.	3.6	2.9	--	2.3	2.3	--	0.68	2.2	--
12-17	Old River Outflow Channel near Knox Landing, La.	1.2	1	--	2.4	2.3	--	3.3	2.4	--
12-18	Mississippi River near St. Francisville, La.	0.1	0.74	--	2.4	2.4	--	1.8	2.5	--
12-20	Mississippi River below Belle Chasse, La.	0.39	0.41	--	2.3	2.3	--	3.4	4.2	--

Table 19.-- Concentration data for dissolved trace elements in water samples collected from the Mississippi River and some of its tributaries during the November-December 1987 cruise -- Continued

Date		Strontium			Thallium			Uranium		
1987	Sampling site	A	B	Grab	A	B	Grab	A	B	Grab
11-29	Illinois River below Meredosia, Ill.	0.26	--	--	<0.05	--	--	0.88	--	--
11-30	Mississippi River near Winfield, Mo.	0.09	0.097	--	<0.05	<0.05	--	0.9	1	--
12-02	Missouri River at St. Charles, Mo.	0.39	0.38	--	<0.05	<0.05	--	4	3.6	--
12-03	Mississippi River at St. Louis, Mo.	0.24	0.23	--	<0.05	<0.05	--	2	2	--
12-05	Mississippi River at Thebes, Ill.	0.22	0.23	--	<0.05	<0.05	--	2	2	--
12-06	Ohio River at Olmsted, Ill.	0.2	0.2	--	<0.05	<0.05	--	0.28	0.28	--
12-07	Mississippi River below Hickman, Ky.	0.22	0.22	--	<0.05	<0.05	--	1.3	1.4	--
12-08	Mississippi River at Fulton, Tenn.	0.22	0.22	--	<0.05	<0.05	--	1.6	1.6	--
12-11	Mississippi River at Helena, Ark.	0.22	0.21	--	<0.05	<0.05	--	1.3	1.3	--
12-12	White River at Mile 11.5, Ark.	0.036	0.036	--	<0.05	<0.05	--	0.31	0.24	--
12-13	Mississippi River above Arkansas City, Ark.	0.21	0.21	--	<0.05	<0.05	--	1.4	1.4	--
12-14	Yazoo River at Mile 10, Miss.	0.05	0.05	--	<0.05	--	--	<0.06	--	--
12-15	Mississippi River below Vicksburg, Miss.	0.2	0.2	--	<0.05	<0.05	--	1.5	1.4	--
12-17	Old River Outflow Channel near Knox Landing, La.	0.2	0.2	--	<0.05	<0.05	--	1.3	1.4	--
12-18	Mississippi River near St. Francisville, La.	0.21	0.21	--	<0.05	<0.05	--	1.4	1.3	--
12-20	Mississippi River below Belle Chasse, La.	0.2	0.2	--	<0.05	<0.05	--	1.3	1.4	--

Table 19.– Concentration data for dissolved trace elements in water samples collected from the Mississippi River and some of its tributaries during the November-December 1987 cruise – Continued

Date		Vanadium			Zinc		
1987	Sampling site	A	B	Grab	A	B	Grab
11-29	Illinois River below Meredosia, Ill.	0.11	--	--	4.9	--	--
11-30	Mississippi River near Winfield, Mo.	0.32	0.27	--	1.2	0.71	--
12-02	Missouri River at St. Charles, Mo.	1.6	1.4	--	2.9	2.7	--
12-03	Mississippi River at St. Louis, Mo.	1.2	1.2	--	5.6	1.3	--
12-05	Mississippi River at Thebes, Ill.	1.1	1	--	5.3	2.2	--
12-06	Ohio River at Olmsted, Ill.	<0.07	<0.07	--	--	4.3	--
12-07	Mississippi River below Hickman, Ky.	0.45	0.59	--	1.9	1.9	--
12-08	Mississippi River at Fulton, Tenn.	0.76	0.8	--	3.7	1.9	--
12-11	Mississippi River at Helena, Ark.	<0.07	<0.07	--	3	2.2	--
12-12	White River at Mile 11.5, Ark.	0.13	<0.07	--	3.9	2.4	--
12-13	Mississippi River above Arkansas City, Ark.	0.85	0.97	--	1.9	1.5	--
12-14	Yazoo River at Mile 10, Miss.	<0.07	--	--	2.9	--	--
12-15	Mississippi River below Vicksburg, Miss.	0.39	0.56	--	1.1	1.9	--
12-17	Old River Outflow Channel near Knox Landing, La.	0.47	0.38	--	4.9	2.3	--
12-18	Mississippi River near St. Francisville, La.	0.41	0.41	--	1	3.1	--
12-20	Mississippi River below Belle Chasse, La.	0.1	0.47	--	2.1	1.3	--

Table 20.– Concentration data for dissolved trace elements in water samples collected from the Mississippi River and some of its tributaries during the May-June 1988 cruise

[A, Composite A; B, Composite B; --, not determined; <, less than the detection limit; All results are in micrograms per liter, except for iron and strontium, which are in milligrams per liter]

Date		Aluminum			Arsenic			Barium		
1988	Sampling site	A	B	Grab	A	B	Grab	A	B	Grab
5-16	Illinois River below Meredosia, Ill.	6.7	9.3	4.7	2.2	2.3	2.4	53	55	54
5-17	Mississippi River near Winfield, Mo.	5.6	5.4	3.4	1.6	1.7	1.5	49	52	51
5-19	Missouri River at Hermann, Mo.	2.7	3.4	4.8	2.9	2.8	3.1	94	94	93
5-20	Mississippi River at St. Louis, Mo.	--	3.9	4.1	2.3	2.3	2.8	77	75	59
5-22	Mississippi River at Thebes, Ill.	<0.2	0.39	0.8	1.2	1.4	1.7	72	74	76
5-23	Ohio River at Olmsted, Ill.	6.2	7	7	0.63	0.81	1.1	38	39	40
5-24	Mississippi River below Hickman, Ky.	3.8	4.2	2.4	1.4	1.4	1.8	62	65	75
5-26	Mississippi River at Fulton, Tenn.	2.8	3.3	3.1	1.5	1.5	1.5	63	63	62
5-28	Mississippi River at Helena, Ark.	130	--	240	1.7	1.6	1.6	69	63	70
5-29	White River at Mile 11.5, Ark.	--	3.1	3.2	0.95	0.86	0.93	38	38	38
5-29	Arkansas River at Mile 1.0, Ark.	--	--	660	--	--	8.6	--	--	400
5-30	Mississippi River above Arkansas City, Ark.	17	14	4.1	1.4	1.4	1.2	64	63	57
6-01	Yazoo River at Mile 10, Miss.	6.3	--	7.6	1.3	--	1.5	76	--	78
6-02	Mississippi River below Vicksburg, Miss.	5.4	6.6	7.8	1.2	1.3	1.3	59	61	63
6-04	Old River Outflow Channel near Knox Landing, La.	0.95	5	<0.2	0.89	0.8	<0.6	62	62	<0.1
6-05	Mississippi River near St. Francisville, La.	1.5	1.5	3.5	0.92	0.97	0.89	66	67	69
6-07	Mississippi River below Belle Chasse, La.	--	14	9.9	1.1	1.1	1.2	71	71	70

Table 20.– Concentration data for dissolved trace elements in water samples collected from the Mississippi River and some of its tributaries during the May-June 1988 cruise – Continued

Date		Beryllium			Boron			Cadmium		
1988	Sampling site	A	B	Grab	A	B	Grab	A	B	Grab
5-16	Illinois River below Meredosia, Ill.	0.14	0.14	0.13	120	120	120	0.4	0.46	0.42
5-17	Mississippi River near Winfield, Mo.	0.13	0.13	0.14	29	28	26	0.3	0.43	0.28
5-19	Missouri River at Hermann, Mo.	0.14	0.15	0.14	95	87	79	0.42	0.56	0.37
5-20	Mississippi River at St. Louis, Mo.	0.16	0.14	0.14	59	54	57	0.46	0.71	0.52
5-22	Mississippi River at Thebes, Ill.	<0.02	<0.02	<0.02	49	53	53	<0.1	<0.1	<0.1
5-23	Ohio River at Olmsted, Ill.	0.062	0.058	0.063	39	38	40	<0.1	0.18	<0.1
5-24	Mississippi River below Hickman, Ky.	0.064	0.06	0.061	50	51	54	0.1	<0.1	0.16
5-26	Mississippi River at Fulton, Tenn.	0.59	0.59	0.59	49	47	47	0.56	0.57	0.54
5-28	Mississippi River at Helena, Ark.	0.61	0.6	0.61	48	45	45	0.72	0.56	0.55
5-29	White River at Mile 11.5, Ark.	0.59	0.58	0.61	11	11	10	0.76	0.54	0.61
5-29	Arkansas River at Mile 1.0, Ark.	–	–	0.56	–	–	170	–	–	0.89
5-30	Mississippi River above Arkansas City, Ark.	0.38	0.36	0.34	48	44	39	0.44	0.21	0.15
6-01	Yazoo River at Mile 10, Miss.	0.36	–	0.4	18	–	19	0.17	–	0.16
6-02	Mississippi River below Vicksburg, Miss.	0.37	0.35	0.38	42	42	41	0.23	0.18	0.19
6-04	Old River Outflow Channel near Knox Landing, La.	<0.02	<0.02	<0.02	37	37	<0.4	<0.1	<0.1	<0.1
6-05	Mississippi River near St. Francisville, La.	<0.02	<0.02	<0.02	41	40	37	<0.1	<0.1	<0.1
6-07	Mississippi River below Belle Chasse, La.	<0.02	<0.02	<0.02	36	36	34	<0.1	<0.1	<0.1

Table 20.– Concentration data for dissolved trace elements in water samples collected from the Mississippi River and some of its tributaries during the May-June 1988 cruise – Continued

Date		Chromium			Cobalt			Copper		
1988	Sampling site	A	B	Grab	A	B	Grab	A	B	Grab
5-16	Illinois River below Meredosia, Ill.	0.34	0.57	0.7	0.52	0.62	0.55	2.3	2.4	6.3
5-17	Mississippi River near Winfield, Mo.	0.54	0.6	0.78	0.36	0.2	0.32	1.2	1.4	1.4
5-19	Missouri River at Hermann, Mo.	0.52	0.63	0.5	<0.008	<0.008	0.088	1.9	1.9	1.9
5-20	Mississippi River at St. Louis, Mo.	1.2	0.96	1.3	0.34	0.19	0.42	1.6	1.6	1.7
5-22	Mississippi River at Thebes, Ill.	<0.2	<0.2	<0.2	<0.008	<0.008	<0.008	0.066	0.12	0.22
5-23	Ohio River at Olmsted, Ill.	0.33	<0.2	<0.2	<0.008	0.071	0.06	0.96	1.2	1.2
5-24	Mississippi River below Hickman, Ky.	0.34	<0.2	0.47	<0.008	0.022	<0.008	1.2	1.1	1.2
5-26	Mississippi River at Fulton, Tenn.	1	0.82	1.1	0.46	0.53	0.5	1.7	2.8	1.7
5-28	Mississippi River at Helena, Ark.	1.4	1.1	1.2	0.62	0.46	0.79	2	1.7	2.8
5-29	White River at Mile 11.5, Ark.	1.9	1.5	0.98	0.49	0.43	0.46	0.68	0.63	0.93
5-29	Arkansas River at Mile 1.0, Ark.	–	–	7.8	–	–	5.1	–	–	8.1
5-30	Mississippi River above Arkansas City, Ark.	1.1	0.61	0.97	0.15	0.14	<0.008	1.5	1.5	1.5
6-01	Yazoo River at Mile 10, Miss.	1.5	–	2	<0.008	–	0.019	1.1	–	1.4
6-02	Mississippi River below Vicksburg, Miss.	1.6	1.1	1.8	<0.008	0.016	<0.008	1.4	1.5	1.7
6-04	Old River Outflow Channel near Knox Landing, La.	<0.2	<0.2	<0.2	<0.008	<0.008	<0.008	0.067	0.077	<0.02
6-05	Mississippi River near St. Francisville, La.	<0.2	<0.2	<0.2	<0.008	<0.008	<0.008	0.03	0.049	0.09
6-07	Mississippi River below Belle Chasse, La.	<0.2	<0.2	<0.2	<0.008	<0.008	<0.008	0.45	0.36	0.37

Table 20.– Concentration data for dissolved trace elements in water samples collected from the Mississippi River and some of its tributaries during the May-June 1988 cruise – Continued

Date		Iron			Lead			Lithium		
1988	Sampling site	A	B	Grab	A	B	Grab	A	B	Grab
5-16	Illinois River below Meredosia, Ill.	<0.005	<0.005	<0.005	0.27	0.32	0.26	6.3	6.7	6.5
5-17	Mississippi River near Winfield, Mo.	<0.005	0.005	0.005	0.19	0.15	0.24	5.8	5.9	5.8
5-19	Missouri River at Hermann, Mo.	<0.005	<0.005	<0.005	0.24	0.26	0.16	36	37	35
5-20	Mississippi River at St. Louis, Mo.	0.015	<0.005	<0.005	0.35	0.37	0.42	19	19	11
5-22	Mississippi River at Thebes, Ill.	<0.005	<0.005	<0.005	<0.06	<0.06	<0.06	16	16	17
5-23	Ohio River at Olmsted, Ill.	<0.005	<0.005	<0.005	<0.06	<0.06	0.078	4.7	–	5.1
5-24	Mississippi River below Hickman, Ky.	<0.005	<0.005	<0.005	<0.06	<0.06	<0.06	12	13	16
5-26	Mississippi River at Fulton, Tenn.	<0.005	<0.005	<0.005	0.062	0.16	0.07	12	12	12
5-28	Mississippi River at Helena, Ark.	0.28	<0.005	0.53	0.54	0.089	0.75	11	11	11
5-29	White River at Mile 11.5, Ark.	0.041	<0.005	<0.005	0.12	0.094	0.1	0.91	0.89	0.91
5-29	Arkansas River at Mile 1.0, Ark.	–	–	0.24	–	–	1.7	–	–	19
5-30	Mississippi River above Arkansas City, Ark.	0.028	0.029	<0.005	0.43	0.4	0.33	11	10	9.3
6-01	Yazoo River at Mile 10, Miss.	<0.005	–	0.005	0.38	–	0.35	2.7	–	2.9
6-02	Mississippi River below Vicksburg, Miss.	<0.005	<0.005	<0.005	0.36	0.36	0.34	9.3	9.7	9.8
6-04	Old River Outflow Channel near Knox Landing, La.	<0.005	<0.005	<0.005	<0.06	<0.06	<0.06	9	9.2	<0.03
6-05	Mississippi River near St. Francisville, La.	<0.005	<0.005	<0.005	<0.06	<0.06	<0.06	8.7	8.6	9.1
6-07	Mississippi River below Belle Chasse, La.	0.2	<0.005	<0.005	<0.06	<0.06	<0.06	9	9.3	9.1

Table 20.– Concentration data for dissolved trace elements in water samples collected from the Mississippi River and some of its tributaries during the May-June 1988 cruise – Continued

Date		Manganese			Molybdenum			Nickel		
1988	Sampling site	A	B	Grab	A	B	Grab	A	B	Grab
5-16	Illinois River below Meredosia, Ill.	0.74	–	0.97	5.8	5.7	5.7	6.3	10	10
5-17	Mississippi River near Winfield, Mo.	6.5	4.9	7.3	1.2	1.3	1.3	2.7	1.1	1.1
5-19	Missouri River at Hermann, Mo.	0.65	0.84	0.55	3	3.1	3	<0.03	<0.03	1.4
5-20	Mississippi River at St. Louis, Mo.	–	0.9	0.81	2.9	2.6	2.6	3.1	0.85	3.7
5-22	Mississippi River at Thebes, Ill.	<0.06	<0.06	<0.06	2.2	2.4	2.5	0.34	2.8	4.9
5-23	Ohio River at Olmsted, Ill.	0.36	0.37	0.34	2.8	2.7	2.9	<0.03	<0.03	<0.03
5-24	Mississippi River below Hickman, Ky.	0.42	0.51	0.44	2.9	2.9	3	<0.03	<0.03	<0.03
5-26	Mississippi River at Fulton, Tenn.	1.3	1.4	1.4	2.6	2.5	2.5	2.2	3.3	3.1
5-28	Mississippi River at Helena, Ark.	44	–	66	2.4	2.5	2.1	2.5	1.6	3
5-29	White River at Mile 11.5, Ark.	9.1	2.6	2.2	0.9	0.95	0.92	0.88	0.96	1.1
5-29	Arkansas River at Mile 1.0, Ark.	–	–	180	–	–	4	–	–	99
5-30	Mississippi River above Arkansas City, Ark.	3.9	3.1	0.45	2.7	2.6	2.4	4.5	4	1.1
6-01	Yazoo River at Mile 10, Miss.	100	–	100	1.3	–	1.4	<0.03	–	<0.03
6-02	Mississippi River below Vicksburg, Miss.	0.28	0.6	1.3	2.4	2.5	2.5	<0.03	0.97	0.99
6-04	Old River Outflow Channel near Knox Landing, La.	<0.06	<0.06	<0.06	2.2	2.2	<0.09	3.9	3	<0.03
6-05	Mississippi River near St. Francisville, La.	<0.06	<0.06	2.1	2.3	2.2	2.3	1.7	1.6	2
6-07	Mississippi River below Belle Chasse, La.	–	0.24	<0.06	2	2.2	2.2	2.1	6.1	4.7

Table 20.-- Concentration data for dissolved trace elements in water samples collected from the Mississippi River and some of its tributaries during the May-June 1988 cruise -- Continued

Date		Strontium			Thallium			Uranium		
1988	Sampling site	A	B	Grab	A	B	Grab	A	B	Grab
5-16	Illinois River below Meredosia, Ill.	0.19	0.2	0.2	<0.05	<0.05	<0.05	1.3	1.2	1.1
5-17	Mississippi River near Winfield, Mo.	0.094	0.11	0.11	<0.05	<0.05	<0.05	1.3	1.4	1.4
5-19	Missouri River at Hermann, Mo.	0.47	0.47	0.41	<0.05	<0.05	<0.05	3.8	3.1	2.7
5-20	Mississippi River at St. Louis, Mo.	0.26	0.27	0.17	<0.05	<0.05	<0.05	1.5	1.4	1.8
5-22	Mississippi River at Thebes, Ill.	0.28	0.27	0.26	<0.05	<0.05	<0.05	3	3	3.3
5-23	Ohio River at Olmsted, Ill.	0.2	0.19	0.2	0.37	0.4	0.38	0.91	0.95	0.98
5-24	Mississippi River below Hickman, Ky.	0.24	0.24	0.26	0.37	0.37	0.36	2.3	2.3	2.8
5-26	Mississippi River at Fulton, Tenn.	0.23	0.22	0.22	<0.05	<0.05	<0.05	2	2.1	2.1
5-28	Mississippi River at Helena, Ark.	0.22	0.21	0.22	<0.05	0.051	<0.05	2.1	2.1	2
5-29	White River at Mile 11.5, Ark.	0.039	0.041	0.04	<0.05	<0.05	<0.05	0.61	0.6	0.62
5-29	Arkansas River at Mile 1.0, Ark.	--	--	0.36	--	--	0.41	--	--	6.4
5-30	Mississippi River above Arkansas City, Ark.	0.2	0.2	0.21	0.14	0.14	0.11	2	2	1.8
6-01	Yazoo River at Mile 10, Miss.	0.12	--	0.12	0.13	--	0.13	0.68	--	0.72
6-02	Mississippi River below Vicksburg, Miss.	0.22	0.22	0.22	0.13	0.14	0.13	1.9	2	1.9
6-04	Old River Outflow Channel near Knox Landing, La.	0.21	0.22	<0.001	<0.05	<0.05	<0.05	1.6	1.6	<0.06
6-05	Mississippi River near St. Francisville, La.	0.22	0.22	0.22	<0.05	<0.05	<0.05	1.5	1.6	1.7
6-07	Mississippi River below Belle Chasse, La.	0.23	0.22	0.22	<0.05	<0.05	<0.05	1.7	1.8	1.7

Table 20.-- Concentration data for dissolved trace elements in water samples collected from the Mississippi River and some of its tributaries during the May-June 1988 cruise -- Continued

Date		Vanadium			Zinc		
1988	Sampling site	A	B	Grab	A	B	Grab
5-16	Illinois River below Meredosia, Ill.	1.2	1.6	1.2	3.4	4	6.7
5-17	Mississippi River near Winfield, Mo.	1.2	1.2	0.97	0.99	1	2.1
5-19	Missouri River at Hermann, Mo.	2.9	2.7	4.3	1.4	1.5	1.4
5-20	Mississippi River at St. Louis, Mo.	1.9	1.7	4.3	1	1.3	1
5-22	Mississippi River at Thebes, Ill.	1.1	1.5	4.1	<0.08	<0.08	0.083
5-23	Ohio River at Olmsted, Ill.	<0.07	<0.07	2.2	0.43	--	0.69
5-24	Mississippi River below Hickman, Ky.	<0.07	<0.07	0.099	0.59	<0.08	<0.08
5-26	Mississippi River at Fulton, Tenn.	<0.07	<0.07	<0.07	0.96	2.1	1.3
5-28	Mississippi River at Helena, Ark.	<0.07	<0.07	<0.07	3.5	1.9	5.5
5-29	White River at Mile 11.5, Ark.	<0.07	<0.07	<0.07	1.7	1.2	1.2
5-29	Arkansas River at Mile 1.0, Ark.	--	--	12	--	--	17
5-30	Mississippi River above Arkansas City, Ark.	<0.07	<0.07	<0.07	1.1	1.6	0.6
6-01	Yazoo River at Mile 10, Miss.	<0.07	--	<0.07	1.2	--	0.98
6-02	Mississippi River below Vicksburg, Miss.	<0.07	<0.07	<0.07	1.5	1.9	0.76
6-04	Old River Outflow Channel near Knox Landing, La.	0.57	0.69	<0.07	<0.08	<0.08	<0.08
6-05	Mississippi River near St. Francisville, La.	1.6	1.6	1.1	<0.08	<0.08	<0.08
6-07	Mississippi River below Belle Chasse, La.	0.89	0.77	4.2	<0.08	<0.08	<0.08

Table 21.-- Concentration data for dissolved trace elements in water samples collected from the Mississippi River and some of its tributaries during the March-April 1989 cruise

[A, Composite A; B, Composite B; --, not determined; <, less than the detection limit; All results are in micrograms per liter, except for iron and strontium, which are in milligrams per liter]

Date		Aluminum			Arsenic			Barium		
1989	Sampling site	A	B	Grab	A	B	Grab	A	B	Grab
3-09	Illinois River at Hardin, Ill.	5.5	3.1	2.4	2.3	1.7	2.2	50	51	50
3-10	Mississippi River near Winfield, Mo.	3.2	3.9	5.2	0.99	0.91	0.93	45	46	46
3-12	Missouri River at Hermann, Mo.	8	9.7	5	1.8	1.6	1.7	66	65	61
3-13	Mississippi River at St. Louis, Mo.	3.1	4.2	--	1.6	1.5	--	54	54	--
3-15	Mississippi River at Thebes, Ill.	3	2.3	3	0.78	1.3	1.8	59	59	58
3-16	Ohio River at Olmsted, Ill.	9.8	7.2	7.6	<0.6	<0.6	<0.6	27	27	26
3-17	Mississippi River below Hickman, Ky.	10	11	15	<0.6	<0.6	<0.6	34	34	33
3-19	Mississippi River below Fulton, Tenn.	5.9	6.2	6.7	<0.6	<0.6	<0.6	36	36	37
3-21	Mississippi River at Helena, Ark.	100	230	230	0.68	<0.6	0.78	42	42	46
3-22	White River at Mile 11.5, Ark.	9.8	7.5	2.9	1.1	0.87	<0.6	31	31	31
3-23	Arkansas River at Pendleton, Ark.	5.4	7	4.1	1.1	0.81	0.9	49	50	52
3-24	Mississippi River above Arkansas City, Ark.	4	5.1	3.9	0.72	1.2	0.91	44	43	43
3-26	Yazoo River below Steele Bayou, Miss.	--	23	35	1.9	2.1	2.2	25	25	27
3-27	Mississippi River below Vicksburg, Miss.	4.1	3.9	4.5	1	0.9	0.9	45	46	46
3-29	Old River Outflow Channel near Knox Landing, La.	2.6	5.3	1.9	1.5	1.3	0.77	47	47	48
3-30	Mississippi River near St. Francisville, La.	2.3	2.1	2.1	1.5	0.78	0.98	48	47	48
4-01	Mississippi River below Belle Chasse, La.	3.7	2.8	3.2	1.2	0.77	0.67	49	49	50

Table 21.-- Concentration data for dissolved trace elements in water samples collected from the Mississippi River and some of its tributaries during the March-April 1989 cruise -- Continued

Date		Beryllium			Boron			Cadmium		
1989	Sampling site	A	B	Grab	A	B	Grab	A	B	Grab
3-09	Illinois River at Hardin, Ill.	<0.02	<0.02	<0.02	130	140	130	<0.1	<0.1	<0.1
3-10	Mississippi River near Winfield, Mo.	<0.02	<0.02	<0.02	37	38	38	<0.1	<0.1	<0.1
3-12	Missouri River at Hermann, Mo.	<0.02	<0.02	<0.02	54	48	44	<0.1	<0.1	<0.1
3-13	Mississippi River at St. Louis, Mo.	<0.02	<0.02	--	61	60	--	<0.1	<0.1	--
3-15	Mississippi River at Thebes, Ill.	<0.02	<0.02	<0.02	57	55	56	<0.1	<0.1	<0.1
3-16	Ohio River at Olmsted, Ill.	<0.02	<0.02	<0.02	15	17	15	<0.1	<0.1	<0.1
3-17	Mississippi River below Hickman, Ky.	<0.02	<0.02	<0.02	22	23	21	<0.1	<0.1	<0.1
3-19	Mississippi River below Fulton, Tenn.	<0.02	<0.02	<0.02	24	25	25	<0.1	<0.1	<0.1
3-21	Mississippi River at Helena, Ark.	<0.02	<0.02	<0.02	23	25	24	<0.1	<0.1	<0.1
3-22	White River at Mile 11.5, Ark.	<0.02	<0.02	0.022	8.1	6.8	6.2	<0.1	<0.1	<0.1
3-23	Arkansas River at Pendleton, Ark.	<0.02	<0.02	<0.02	27	28	30	<0.1	<0.1	<0.1
3-24	Mississippi River above Arkansas City, Ark.	0.039	<0.02	<0.02	24	26	27	<0.1	<0.1	<0.1
3-26	Yazoo River below Steele Bayou, Miss.	0.022	<0.02	<0.02	13	12	13	<0.1	<0.1	<0.1
3-27	Mississippi River below Vicksburg, Miss.	<0.02	<0.02	<0.02	23	25	25	<0.1	<0.1	<0.1
3-29	Old River Outflow Channel near Knox Landing, La.	<0.02	<0.02	<0.02	23	24	23	<0.1	<0.1	<0.1
3-30	Mississippi River near St. Francisville, La.	<0.02	<0.02	<0.02	23	23	24	<0.1	<0.1	<0.1
4-01	Mississippi River below Belle Chasse, La.	<0.02	<0.02	<0.02	22	24	23	<0.1	<0.1	<0.1

Table 21.– Concentration data for dissolved trace elements in water samples collected from the Mississippi River and some of its tributaries during the March-April 1989 cruise – Continued

Date		Chromium			Cobalt			Copper		
1989	Sampling site	A	B	Grab	A	B	Grab	A	B	Grab
3-09	Illinois River at Hardin, Ill.	0.96	0.96	0.81	0.87	0.83	0.77	2.1	2.2	2.2
3-10	Mississippi River near Winfield, Mo.	0.67	0.77	0.54	0.44	0.48	0.44	1.2	1.2	1
3-12	Missouri River at Hermann, Mo.	0.48	0.27	<0.2	0.34	0.35	0.32	1	1	0.88
3-13	Mississippi River at St. Louis, Mo.	0.27	0.24	–	0.45	0.45	–	1.3	1.2	–
3-15	Mississippi River at Thebes, Ill.	0.37	<0.2	0.21	0.44	0.41	0.41	1.2	1.4	1.1
3-16	Ohio River at Olmsted, Ill.	<0.2	<0.2	<0.2	0.21	0.2	0.19	0.52	0.81	0.94
3-17	Mississippi River below Hickman, Ky.	<0.2	<0.2	<0.2	0.21	0.25	0.24	0.65	0.82	0.73
3-19	Mississippi River below Fulton, Tenn.	<0.2	<0.2	<0.2	0.23	0.23	0.24	0.74	0.73	0.72
3-21	Mississippi River at Helena, Ark.	<0.2	<0.2	<0.2	0.32	0.34	0.31	0.88	0.86	0.89
3-22	White River at Mile 11.5, Ark.	<0.2	<0.2	<0.2	0.1	0.1	0.088	0.31	0.32	0.3
3-23	Arkansas River at Pendleton, Ark.	<0.2	<0.2	<0.2	0.18	0.14	0.21	0.45	0.55	0.66
3-24	Mississippi River above Arkansas City, Ark.	<0.2	<0.2	<0.2	0.21	0.22	0.2	0.46	0.52	0.51
3-26	Yazoo River below Steele Bayou, Miss.	<0.2	<0.2	<0.2	0.03	0.031	0.042	0.69	0.7	0.81
3-27	Mississippi River below Vicksburg, Miss.	<0.2	<0.2	<0.2	0.19	0.19	0.19	0.49	0.48	0.48
3-29	Old River Outflow Channel near Knox Landing, La.	<0.2	<0.2	<0.2	0.19	0.15	0.16	0.92	0.94	0.91
3-30	Mississippi River near St. Francisville, La.	<0.2	<0.2	<0.2	0.16	0.17	0.14	0.91	0.84	1.1
4-01	Mississippi River below Belle Chasse, La.	<0.2	<0.2	<0.2	0.13	0.13	0.13	0.93	0.91	0.9

Table 21.– Concentration data for dissolved trace elements in water samples collected from the Mississippi River and some of its tributaries during the March-April 1989 cruise – Continued

Date		Iron			Lead			Lithium		
1989	Sampling site	A	B	Grab	A	B	Grab	A	B	Grab
3-09	Illinois River at Hardin, Ill.	<0.005	<0.005	<0.005	0.27	0.24	0.29	6.2	6.7	6.4
3-10	Mississippi River near Winfield, Mo.	0.016	0.017	0.016	0.13	0.11	0.072	3.2	3.4	3.1
3-12	Missouri River at Hermann, Mo.	0.006	0.011	<0.005	0.065	0.16	0.089	16	14	13
3-13	Mississippi River at St. Louis, Mo.	<0.005	0.005	–	0.069	0.069	–	8.1	8.1	–
3-15	Mississippi River at Thebes, Ill.	0.005	<0.005	<0.005	0.13	0.15	0.11	8	7.8	8.1
3-16	Ohio River at Olmsted, Ill.	0.008	0.005	0.006	<0.06	<0.06	<0.06	1.6	1.7	1.7
3-17	Mississippi River below Hickman, Ky.	0.006	<0.005	0.006	<0.06	<0.06	<0.06	2.6	2.7	2.5
3-19	Mississippi River below Fulton, Tenn.	<0.005	<0.005	<0.005	<0.06	<0.06	<0.06	2.6	2.8	2.9
3-21	Mississippi River at Helena, Ark.	0.095	0.17	0.16	<0.06	0.087	<0.06	2.6	2.8	2.6
3-22	White River at Mile 11.5, Ark.	0.013	0.015	0.012	<0.06	<0.06	<0.06	0.24	0.2	0.19
3-23	Arkansas River at Pendleton, Ark.	0.009	0.009	0.009	<0.06	<0.06	<0.06	2.1	2.3	2.4
3-24	Mississippi River above Arkansas City, Ark.	<0.005	<0.005	<0.005	<0.06	0.094	<0.06	2.9	3	2.8
3-26	Yazoo River below Steele Bayou, Miss.	0.028	0.036	0.047	<0.06	<0.06	<0.06	0.86	0.83	1.1
3-27	Mississippi River below Vicksburg, Miss.	<0.005	<0.005	<0.005	<0.06	<0.06	<0.06	2.9	3	3.3
3-29	Old River Outflow Channel near Knox Landing, La.	0.005	<0.005	<0.005	<0.06	0.25	0.091	3	3	3.1
3-30	Mississippi River near St. Francisville, La.	<0.005	0.005	<0.005	<0.06	<0.06	<0.06	3.2	3	3.2
4-01	Mississippi River below Belle Chasse, La.	0.005	<0.005	<0.005	<0.06	<0.06	<0.06	3	3.1	3.2

Table 21.-- Concentration data for dissolved trace elements in water samples collected from the Mississippi River and some of its tributaries during the March-April 1989 cruise -- Continued

Date		Manganese			Molybdenum			Nickel		
1989	Sampling site	A	B	Grab	A	B	Grab	A	B	Grab
3-09	Illinois River at Hardin, Ill.	16	18	23	6.3	6.4	5.6	19	19	18
3-10	Mississippi River near Winfield, Mo.	1.7	1.9	1.4	1.3	1.3	1.4	9	9.5	8.9
3-12	Missouri River at Hermann, Mo.	4.4	--	7	1.8	1.7	1.6	7.9	7.1	6.5
3-13	Mississippi River at St. Louis, Mo.	2.5	3.3	--	2.5	2.3	--	9.3	9.1	--
3-15	Mississippi River at Thebes, Ill.	1.1	1.5	1.3	2.2	2.1	2.1	8.2	8.4	8.5
3-16	Ohio River at Olmsted, Ill.	4	4	4.6	0.77	0.76	0.67	4.6	4.8	4.5
3-17	Mississippi River below Hickman, Ky.	1.9	1.5	14	0.97	1.1	0.92	5.5	5.3	5
3-19	Mississippi River below Fulton, Tenn.	1.6	1.7	1.9	0.94	0.93	0.99	5.3	5.6	5.8
3-21	Mississippi River at Helena, Ark.	12	10	8.3	0.93	0.88	0.83	5.5	5.8	5.5
3-22	White River at Mile 11.5, Ark.	3.3	3.2	4.1	0.34	0.27	0.34	3.1	3.1	3
3-23	Arkansas River at Pendleton, Ark.	1.8	2	1.5	0.55	0.59	0.58	4.3	4.1	4.6
3-24	Mississippi River above Arkansas City, Ark.	1.6	1.5	1.3	0.92	1	1	5.3	5.4	5.1
3-26	Yazoo River below Steele Bayou, Miss.	9.4	9.4	11	0.16	0.14	0.27	2.4	2.3	2.4
3-27	Mississippi River below Vicksburg, Miss.	0.77	0.72	0.89	0.98	0.9	0.99	5	5.2	5.2
3-29	Old River Outflow Channel near Knox Landing, La.	2.6	2.5	2.7	1	0.99	1	5.4	5.3	5.6
3-30	Mississippi River near St. Francisville, La.	1.7	1.6	1.6	0.97	0.99	1	5.4	5.4	5.3
4-01	Mississippi River below Belle Chasse, La.	2.2	2.1	6.5	0.91	1.2	1	5	5.1	5.1

Table 21.-- Concentration data for dissolved trace elements in water samples collected from the Mississippi River and some of its tributaries during the March-April 1989 cruise -- Continued

Date		Strontium			Thallium			Uranium		
1989	Sampling site	A	B	Grab	A	B	Grab	A	B	Grab
3-09	Illinois River at Hardin, Ill.	0.28	0.28	0.27	<0.05	<0.05	<0.05	1.6	1.7	1.6
3-10	Mississippi River near Winfield, Mo.	0.094	0.093	0.092	<0.05	<0.05	<0.05	0.78	0.8	0.74
3-12	Missouri River at Hermann, Mo.	0.27	0.26	0.24	<0.05	<0.05	<0.05	3.2	3.1	2.9
3-13	Mississippi River at St. Louis, Mo.	0.19	0.2	--	<0.05	<0.05	--	2	1.9	--
3-15	Mississippi River at Thebes, Ill.	0.19	0.19	0.19	<0.05	<0.05	<0.05	1.7	1.8	1.8
3-16	Ohio River at Olmsted, Ill.	0.11	0.11	0.11	<0.05	<0.05	<0.05	0.21	0.14	0.13
3-17	Mississippi River below Hickman, Ky.	0.12	0.12	0.12	<0.05	<0.05	<0.05	0.42	0.48	0.38
3-19	Mississippi River below Fulton, Tenn.	0.12	0.12	0.12	<0.05	<0.05	<0.05	0.41	0.53	0.44
3-21	Mississippi River at Helena, Ark.	0.12	0.12	0.12	<0.05	<0.05	<0.05	0.52	0.49	0.49
3-22	White River at Mile 11.5, Ark.	0.027	0.027	0.032	<0.05	<0.05	<0.05	<0.06	<0.06	<0.06
3-23	Arkansas River at Pendleton, Ark.	0.17	0.17	0.18	<0.05	<0.05	<0.05	0.47	0.49	0.44
3-24	Mississippi River above Arkansas City, Ark.	0.12	0.12	0.12	<0.05	<0.05	<0.05	0.52	0.45	0.5
3-26	Yazoo River below Steele Bayou, Miss.	0.036	0.036	0.037	<0.05	<0.05	<0.05	<0.06	<0.06	<0.06
3-27	Mississippi River below Vicksburg, Miss.	0.12	0.12	0.13	<0.05	<0.05	<0.05	0.51	0.5	0.79
3-29	Old River Outflow Channel near Knox Landing, La.	0.12	0.12	0.12	<0.05	<0.05	<0.05	0.64	0.72	0.74
3-30	Mississippi River near St. Francisville, La.	0.12	0.12	0.12	<0.05	<0.05	<0.05	0.71	0.7	0.75
4-01	Mississippi River below Belle Chasse, La.	0.12	0.12	0.12	<0.05	<0.05	<0.05	0.79	0.75	0.65

Table 21.-- Concentration data for dissolved trace elements in water samples collected from the Mississippi River and some of its tributaries during the March-April 1989 cruise -- Continued

Date		Vanadium			Zinc		
1989	Sampling site	A	B	Grab	A	B	Grab
3-09	Illinois River at Hardin, Ill.	1.7	1.8	1.5	8.1	8.6	7.5
3-10	Mississippi River near Winfield, Mo.	0.65	0.72	0.62	3.6	2.2	1.5
3-12	Missouri River at Hermann, Mo.	1.3	1.2	1.1	1.9	1.3	1.1
3-13	Mississippi River at St. Louis, Mo.	0.92	1	--	2.1	--	--
3-15	Mississippi River at Thebes, Ill.	1.1	1.2	1.1	2	1.9	1.8
3-16	Ohio River at Olmsted, Ill.	0.33	0.33	0.28	0.17	0.33	0.093
3-17	Mississippi River below Hickman, Ky.	0.42	0.45	0.41	0.52	0.42	0.29
3-19	Mississippi River below Fulton, Tenn.	0.38	0.42	0.44	0.59	0.62	1
3-21	Mississippi River at Helena, Ark.	0.62	0.85	0.82	--	0.87	1
3-22	White River at Mile 11.5, Ark.	0.36	0.33	0.28	0.3	0.88	0.39
3-23	Arkansas River at Pendleton, Ark.	0.45	0.48	0.5	0.76	0.55	2.2
3-24	Mississippi River above Arkansas City, Ark.	0.51	0.48	0.54	1.1	6.3	0.62
3-26	Yazoo River below Steele Bayou, Miss.	0.52	0.54	0.54	0.57	0.78	0.42
3-27	Mississippi River below Vicksburg, Miss.	0.57	0.49	0.52	0.49	0.49	1.5
3-29	Old River Outflow Channel near Knox Landing, La.	0.72	0.71	0.68	4.9	2.6	1.2
3-30	Mississippi River near St. Francisville, La.	0.71	0.69	0.69	0.81	0.91	2.2
4-01	Mississippi River below Belle Chasse, La.	0.92	0.83	0.88	2.2	1.7	3.1

Table 22.-- Concentration data for dissolved trace elements in water samples collected from the Mississippi River and some of its tributaries during the June 1989 cruise

[A, Composite A; B, Composite B; --, not determined; <, less than the detection limit; All results are in micrograms per liter, except for iron and strontium, which are in milligrams per liter]

Date		Aluminum			Arsenic			Barium		
1989	Sampling site	A	B	Grab	A	B	Grab	A	B	Grab
6-04	Illinois River at Hardin, Ill.	7.2	--	16	3.1	--	3.1	66	--	65
6-05	Mississippi River near Winfield, Mo.	5.3	4	2.8	2.4	2.2	2.3	63	63	63
6-07	Missouri River at Hermann, Mo.	6.2	5.7	4.7	2.6	2.6	2.4	88	87	87
6-08	Mississippi River at St. Louis, Mo.	3.5	3.4	2.8	2	2	2.1	75	75	72
6-10	Mississippi River at Thebes, Ill.	4.6	3.4	3	2.4	2.7	2.4	76	76	76
6-11	Ohio River at Olmsted, Ill.	6.1	5.8	45	1.4	1.1	1.1	39	39	42
6-12	Mississippi River below Hickman, Ky.	5.2	6.7	4.9	1.5	1.5	1.3	52	54	49
6-14	Mississippi River at Fulton, Tenn.	5.3	6.7	5.1	1.3	1.4	1.3	55	54	55
6-17	Mississippi River at Helena, Ark.	8.7	7.1	4.4	1.5	1.2	1.3	52	52	51
6-18	White River at Mile 11.5, Ark.	20	--	35	0.9	--	0.78	39	--	39
6-19	Arkansas River at Pendleton, Ark.	66	--	2.8	1.8	--	1.4	74	--	76
6-20	Mississippi River above Arkansas City, Ark.	79	64	4.4	1.2	1.8	1.4	50	51	52
6-22	Yazoo River below Steele Bayou, Miss.	25	23	24	1.9	1.3	1.8	26	25	27
6-23	Mississippi River below Vicksburg, Miss.	4.9	4	3.3	1.3	1.2	1.8	48	48	48
6-25	Old River Outflow Channel near Knox Landing, La.	3.5	5.4	3.4	1	1.4	1.5	48	49	50
6-26	Mississippi River near St. Francisville, La.	3.7	3.7	7.3	2.1	0.84	2	48	49	49
6-28	Mississippi River below Belle Chasse, La.	4.4	4.6	3.6	1.9	2.2	1.7	50	50	52

Table 22.-- Concentration data for dissolved trace elements in water samples collected from the Mississippi River and some of its tributaries during the June 1989 cruise -- Continued

Date		Beryllium			Boron			Cadmium		
1989	Sampling site	A	B	Grab	A	B	Grab	A	B	Grab
6-04	Illinois River at Hardin, Ill.	0.043	--	0.03	150	--	150	<0.1	--	<0.1
6-05	Mississippi River near Winfield, Mo.	<0.02	<0.02	0.027	46	43	46	<0.1	<0.1	<0.1
6-07	Missouri River at Hermann, Mo.	0.033	<0.02	0.025	110	110	110	<0.1	<0.1	<0.1
6-08	Mississippi River at St. Louis, Mo.	<0.02	0.041	<0.02	89	93	87	<0.1	<0.1	<0.1
6-10	Mississippi River at Thebes, Ill.	0.037	0.029	0.024	94	97	98	<0.1	<0.1	<0.1
6-11	Ohio River at Olmsted, Ill.	<0.02	<0.02	<0.02	33	32	33	<0.1	<0.1	<0.1
6-12	Mississippi River below Hickman, Ky.	<0.02	<0.02	<0.02	46	48	42	<0.1	<0.1	<0.1
6-14	Mississippi River at Fulton, Tenn.	<0.02	<0.02	<0.02	48	48	48	<0.1	<0.1	<0.1
6-17	Mississippi River at Helena, Ark.	<0.02	<0.02	<0.02	44	43	45	<0.1	<0.1	<0.1
6-18	White River at Mile 11.5, Ark.	<0.02	--	<0.02	8.3	--	7.9	<0.1	--	<0.1
6-19	Arkansas River at Pendleton, Ark.	<0.02	--	<0.02	44	--	41	<0.1	--	<0.1
6-20	Mississippi River above Arkansas City, Ark.	<0.02	<0.02	0.022	34	35	35	<0.1	<0.1	<0.1
6-22	Yazoo River below Steele Bayou, Miss.	<0.02	<0.02	<0.02	16	14	14	<0.1	<0.1	<0.1
6-23	Mississippi River below Vicksburg, Miss.	<0.02	<0.02	<0.02	31	31	32	<0.1	<0.1	<0.1
6-25	Old River Outflow Channel near Knox Landing, La.	<0.02	<0.02	<0.02	32	32	33	<0.1	<0.1	<0.1
6-26	Mississippi River near St. Francisville, La.	<0.02	0.033	<0.02	34	34	34	<0.1	<0.1	<0.1
6-28	Mississippi River below Belle Chasse, La.	<0.02	<0.02	0.028	32	38	36	<0.1	<0.1	<0.1

Table 22.-- Concentration data for dissolved trace elements in water samples collected from the Mississippi River and some of its tributaries during the June 1989 cruise -- Continued

Date		Chromium			Cobalt			Copper		
1989	Sampling site	A	B	Grab	A	B	Grab	A	B	Grab
6-04	Illinois River at Hardin, Ill.	0.56	--	0.66	0.73	--	0.72	2.2	--	2.1
6-05	Mississippi River near Winfield, Mo.	0.39	0.4	0.44	0.44	0.4	0.44	1.5	1.4	1.3
6-07	Missouri River at Hermann, Mo.	0.53	0.59	0.46	0.37	0.35	0.37	1.5	1.6	1.5
6-08	Mississippi River at St. Louis, Mo.	0.34	0.39	0.29	0.39	0.45	0.44	1.5	1.5	1.4
6-10	Mississippi River at Thebes, Ill.	0.35	0.43	0.36	0.41	0.43	0.42	1.6	1.6	1.5
6-11	Ohio River at Olmsted, Ill.	<0.2	<0.2	<0.2	0.13	0.11	0.18	1.3	1.2	1.3
6-12	Mississippi River below Hickman, Ky.	<0.2	<0.2	<0.2	0.15	0.19	0.16	1.3	1.2	1.3
6-14	Mississippi River at Fulton, Tenn.	<0.2	<0.2	<0.2	0.14	0.16	0.18	1.3	1.2	1.3
6-17	Mississippi River at Helena, Ark.	<0.2	<0.2	<0.2	0.11	0.13	0.093	1.2	1.2	1.2
6-18	White River at Mile 11.5, Ark.	<0.2	--	<0.2	0.03	--	0.024	0.48	--	0.48
6-19	Arkansas River at Pendleton, Ark.	<0.2	--	<0.2	0.27	--	0.22	1.7	--	1.5
6-20	Mississippi River above Arkansas City, Ark.	<0.2	<0.2	<0.2	0.28	0.3	0.24	1.4	1.5	1.5
6-22	Yazoo River below Steele Bayou, Miss.	<0.2	<0.2	<0.2	0.046	0.068	0.052	2	1.8	1.8
6-23	Mississippi River below Vicksburg, Miss.	<0.2	<0.2	<0.2	0.22	0.2	0.2	1.4	1.3	1.4
6-25	Old River Outflow Channel near Knox Landing, La.	<0.2	<0.2	<0.2	0.23	0.21	0.22	1.4	1.3	1.4
6-26	Mississippi River near St. Francisville, La.	<0.2	<0.2	<0.2	0.28	0.24	0.27	1.5	1.5	1.5
6-28	Mississippi River below Belle Chasse, La.	<0.2	<0.2	<0.2	0.22	0.27	0.32	1.7	2.4	1.6

Table 22.-- Concentration data for dissolved trace elements in water samples collected from the Mississippi River and some of its tributaries during the June 1989 cruise -- Continued

Date		Iron			Lead			Lithium		
1989	Sampling site	A	B	Grab	A	B	Grab	A	B	Grab
6-04	Illinois River at Hardin, Ill.	<0.005	--	<0.005	0.085	--	0.1	6.3	--	6.6
6-05	Mississippi River near Winfield, Mo.	<0.005	<0.005	<0.005	<0.06	<0.06	<0.06	4.7	4.7	5
6-07	Missouri River at Hermann, Mo.	<0.005	<0.005	0.007	<0.06	0.32	<0.06	33	32	32
6-08	Mississippi River at St. Louis, Mo.	<0.005	0.005	<0.005	<0.06	<0.06	<0.06	16	17	14
6-10	Mississippi River at Thebes, Ill.	<0.005	<0.005	0.005	<0.06	<0.06	<0.06	15	17	17
6-11	Ohio River at Olmsted, Ill.	<0.005	<0.005	0.04	0.087	<0.06	0.07	2.2	2	2.2
6-12	Mississippi River below Hickman, Ky.	<0.005	<0.005	<0.005	0.076	<0.06	<0.06	5.4	5.4	4.6
6-14	Mississippi River at Fulton, Tenn.	0.005	<0.005	<0.005	<0.06	<0.06	<0.06	5.1	5.4	5.3
6-17	Mississippi River at Helena, Ark.	<0.005	0.005	<0.005	<0.06	<0.06	<0.06	4.5	4.4	4.5
6-18	White River at Mile 11.5, Ark.	0.024	--	0.038	<0.06	--	<0.06	0.27	--	0.31
6-19	Arkansas River at Pendleton, Ark.	0.061	--	<0.005	0.17	--	0.13	3.4	--	3.3
6-20	Mississippi River above Arkansas City, Ark.	0.085	0.07	<0.005	0.18	0.15	0.16	3.4	3.7	3.4
6-22	Yazoo River below Steele Bayou, Miss.	0.041	0.037	0.049	<0.06	0.068	0.069	0.73	0.65	0.6
6-23	Mississippi River below Vicksburg, Miss.	<0.005	0.006	<0.005	0.063	<0.06	<0.06	2.9	2.9	2.9
6-25	Old River Outflow Channel near Knox Landing, La.	<0.005	<0.005	<0.005	<0.06	<0.06	<0.06	3.1	3	3.3
6-26	Mississippi River near St. Francisville, La.	<0.005	<0.005	<0.005	<0.06	<0.06	1.4	3.4	3.3	3.3
6-28	Mississippi River below Belle Chasse, La.	<0.005	<0.005	<0.005	<0.06	<0.06	0.096	3.4	3.6	3.5

Table 22.-- Concentration data for dissolved trace elements in water samples collected from the Mississippi River and some of its tributaries during the June 1989 cruise -- Continued

Date		Manganese			Molybdenum			Nickel		
1989	Sampling site	A	B	Grab	A	B	Grab	A	B	Grab
6-04	Illinois River at Hardin, Ill.	0.36	--	1.1	5.7	--	6.1	14	--	15
6-05	Mississippi River near Winfield, Mo.	0.44	0.39	0.57	1.7	2	1.8	7.6	7.1	7.7
6-07	Missouri River at Hermann, Mo.	0.21	0.27	0.2	3.3	3.3	3.3	8.7	8.4	8.4
6-08	Mississippi River at St. Louis, Mo.	0.38	0.48	0.45	3.1	3.1	2.9	8.6	8.9	8.5
6-10	Mississippi River at Thebes, Ill.	0.81	0.37	0.66	3.1	3.2	3.2	8.6	9	8.9
6-11	Ohio River at Olmsted, Ill.	1.4	0.54	8.3	2.4	2.1	2	5.4	5.5	5.5
6-12	Mississippi River below Hickman, Ky.	2	4.9	1.4	2.4	2.4	2.3	6.3	6.6	5.9
6-14	Mississippi River at Fulton, Tenn.	2.2	3.9	1.3	2.2	2.2	2.4	6	6.1	5.9
6-17	Mississippi River at Helena, Ark.	0.2	0.12	0.16	2.2	2.2	2.1	5.8	5.6	5.3
6-18	White River at Mile 11.5, Ark.	1.5	--	2.4	0.73	--	0.58	3.4	--	3.6
6-19	Arkansas River at Pendleton, Ark.	3.4	--	0.87	1.1	--	0.97	5.7	--	5.4
6-20	Mississippi River above Arkansas City, Ark.	4.4	4.4	0.32	1.8	1.7	1.7	5.6	5.8	5.4
6-22	Yazoo River below Steele Bayou, Miss.	2.4	2.8	6.3	0.3	0.41	0.29	2.4	2.5	2.3
6-23	Mississippi River below Vicksburg, Miss.	0.39	0.27	0.26	1.7	1.6	1.7	4.7	5	5.2
6-25	Old River Outflow Channel near Knox Landing, La.	0.33	0.43	0.42	1.7	1.7	1.7	5.4	5.1	5.1
6-26	Mississippi River near St. Francisville, La.	0.27	0.3	0.35	2.1	1.8	1.8	5.3	5.3	5.6
6-28	Mississippi River below Belle Chasse, La.	0.28	0.25	0.95	1.9	1.8	1.9	5.2	5.5	5.8

Table 22.-- Concentration data for dissolved trace elements in water samples collected from the Mississippi River and some of its tributaries during the June 1989 cruise -- Continued

Date		Strontium			Thallium			Uranium		
1989	Sampling site	A	B	Grab	A	B	Grab	A	B	Grab
6-04	Illinois River at Hardin, Ill.	0.22	--	0.22	0.057	--	0.12	1.6	--	1.9
6-05	Mississippi River near Winfield, Mo.	0.094	0.095	0.091	0.054	<0.05	0.064	1.4	1.3	1.3
6-07	Missouri River at Hermann, Mo.	0.4	0.4	0.4	0.063	<0.05	0.065	4.1	4.5	4.3
6-08	Mississippi River at St. Louis, Mo.	0.23	0.23	0.2	<0.05	0.054	<0.05	2.5	2.6	2.3
6-10	Mississippi River at Thebes, Ill.	0.22	0.22	0.22	0.053	<0.05	0.06	2.2	2.5	2.4
6-11	Ohio River at Olmsted, Ill.	0.17	0.17	0.2	0.091	0.054	<0.05	0.55	0.48	0.4
6-12	Mississippi River below Hickman, Ky.	0.18	0.18	0.18	<0.05	0.051	<0.05	0.99	0.99	0.92
6-14	Mississippi River at Fulton, Tenn.	0.18	0.18	0.18	<0.05	<0.05	<0.05	0.93	0.91	1.1
6-17	Mississippi River at Helena, Ark.	0.17	0.18	0.19	<0.05	<0.05	<0.05	0.74	0.7	0.82
6-18	White River at Mile 11.5, Ark.	0.096	--	0.047	<0.05	--	<0.05	0.22	--	0.3
6-19	Arkansas River at Pendleton, Ark.	0.27	--	0.27	0.083	--	0.063	0.9	--	0.99
6-20	Mississippi River above Arkansas City, Ark.	0.21	0.16	0.17	<0.05	0.063	<0.05	0.76	0.84	0.68
6-22	Yazoo River below Steele Bayou, Miss.	0.031	0.093	0.031	<0.05	<0.05	<0.05	<0.06	0.11	<0.06
6-23	Mississippi River below Vicksburg, Miss.	0.15	0.16	0.16	<0.05	<0.05	0.068	0.64	0.54	0.56
6-25	Old River Outflow Channel near Knox Landing, La.	0.15	0.15	0.15	<0.05	<0.05	<0.05	0.68	0.56	0.59
6-26	Mississippi River near St. Francisville, La.	0.15	0.16	0.16	<0.05	<0.05	<0.05	0.72	0.6	0.69
6-28	Mississippi River below Belle Chasse, La.	0.14	0.13	0.15	<0.05	<0.05	<0.05	0.73	0.68	0.76

Table 22.-- Concentration data for dissolved trace elements in water samples collected from the Mississippi River and some of its tributaries during the June 1989 cruise -- Continued

Date		Vanadium			Zinc		
1989	Sampling site	A	B	Grab	A	B	Grab
6-04	Illinois River at Hardin, Ill.	3.4	--	3.4	4.3	--	4.8
6-05	Mississippi River near Winfield, Mo.	2.2	2.2	2.2	4.4	2.2	2.3
6-07	Missouri River at Hermann, Mo.	2.7	2.6	2.4	3.3	7.5	1.9
6-08	Mississippi River at St. Louis, Mo.	2.6	2.7	2.6	4.5	3.2	3.8
6-10	Mississippi River at Thebes, Ill.	2.6	2.7	2.7	4.5	1.7	2.2
6-11	Ohio River at Olmsted, Ill.	0.7	0.62	0.62	1.7	3	2.8
6-12	Mississippi River below Hickman, Ky.	1.2	1.3	1	2.2	1.3	1.1
6-14	Mississippi River at Fulton, Tenn.	1.1	1.1	1.2	3.5	1.7	1
6-17	Mississippi River at Helena, Ark.	1.1	1.1	1.1	0.82	0.97	0.79
6-18	White River at Mile 11.5, Ark.	0.65	--	0.65	1.1	--	0.95
6-19	Arkansas River at Pendleton, Ark.	1.7	--	1.4	2.6	--	1.2
6-20	Mississippi River above Arkansas City, Ark.	1.3	1.2	1.1	2.4	2.1	2.7
6-22	Yazoo River below Steele Bayou, Miss.	1	1	0.91	3.3	0.58	17
6-23	Mississippi River below Vicksburg, Miss.	1	1	1	5.3	2.3	1.2
6-25	Old River Outflow Channel near Knox Landing, La.	1.1	1.1	1.1	1.8	1.1	2.7
6-26	Mississippi River near St. Francisville, La.	1.4	1.2	1.2	2.3	1.7	3
6-28	Mississippi River below Belle Chasse, La.	1.4	1.4	1.4	1.5	1.9	6.4

Table 23.-- Concentration data for dissolved trace elements in water samples collected from the Mississippi River and some of its tributaries during the February-March 1990 cruise

[A, Composite A; B, Composite B; --, not determined; <, less than the detection limit; All results are in micrograms per liter, except for iron and strontium, which are in milligrams per liter]

Date		Aluminum			Arsenic			Barium		
1990	Sampling site	A	B	Grab	A	B	Grab	A	B	Grab
2-23	Cumberland River near Smithland, Ky.	15	12	17	0.65	<0.6	<0.6	23	23	22
2-24	Tennessee River near Calvert City, Ky.	26	28	29	<0.6	0.61	<0.6	20	20	20
2-25	Mississippi River near Cache, Ill.	6.7	--	13	1.6	--	1.7	65	--	66
2-28	Wabash River near New Haven, Ill.	4.7	4.8	7.1	0.77	<0.6	1.1	40	41	41
3-01	Ohio River at Uniontown, Ky.	13	11	13	0.6	<0.6	<0.6	31	32	31
3-03	Ohio River at Olmsted, Ill.	6.5	6.1	6.9	0.62	<0.6	0.63	28	28	32
3-04	Mississippi River below Hickman, Ky.	7.3	5	4.9	<0.6	0.7	0.84	37	37	40
3-05	Mississippi River below Fulton, Tenn.	--	4.9	5.9	0.74	<0.6	<0.6	36	36	37
3-07	Mississippi River at Helena, Ark.	4	--	3.9	1.4	1.1	1.4	41	41	39
3-07	Arkansas River at Mile 1.0, Ark.	2.2	--	--	0.79	--	--	52	--	--
3-08	Mississippi River above Arkansas City, Ark.	3.2	3.1	3.3	0.81	0.89	0.85	40	40	41
3-08	White River at Mile 1.0, Ark.	8.5	--	--	0.72	--	--	32	--	--
3-10	Yazoo River at Mile 1.0, Miss.	18	--	--	1.1	--	--	32	--	--
3-10	Mississippi River below Vicksburg, Miss.	3.7	4.1	360	0.87	1.1	0.98	40	40	46
3-12	Mississippi River near St. Francisville, La.	2.9	4.1	2.5	0.81	0.75	0.88	42	42	42
3-14	Mississippi River below Belle Chasse, La.	3.2	3.2	6.4	1.2	1.5	1	44	43	45

Table 23.-- Concentration data for dissolved trace elements in water samples collected from the Mississippi River and some of its tributaries during the February-March 1990 cruise -- Continued

Date		Beryllium			Boron			Cadmium		
1990	Sampling site	A	B	Grab	A	B	Grab	A	B	Grab
2-23	Cumberland River near Smithland, Ky.	<0.02	<0.02	<0.02	13	13	13	<0.1	<0.1	<0.1
2-24	Tennessee River near Calvert City, Ky.	<0.02	<0.02	<0.02	7.2	7.4	6.7	<0.1	<0.1	<0.1
2-25	Mississippi River near Cache, Ill.	<0.02	--	<0.02	61	--	65	<0.1	--	<0.1
2-28	Wabash River near New Haven, Ill.	<0.02	<0.02	<0.02	35	40	39	<0.1	<0.1	<0.1
3-01	Ohio River at Uniontown, Ky.	<0.02	<0.02	<0.02	26	25	24	<0.1	<0.1	<0.1
3-03	Ohio River at Olmsted, Ill.	<0.02	<0.02	<0.02	22	20	26	<0.1	<0.1	<0.1
3-04	Mississippi River below Hickman, Ky.	<0.02	<0.02	<0.02	25	25	28	<0.1	<0.1	<0.1
3-05	Mississippi River below Fulton, Tenn.	<0.02	<0.02	<0.02	27	25	28	<0.1	<0.1	<0.1
3-07	Mississippi River at Helena, Ark.	0.026	<0.02	0.04	25	22	27	<0.1	<0.1	<0.1
3-07	Arkansas River at Mile 1.0, Ark.	<0.02	--	--	26	--	--	<0.1	--	--
3-08	Mississippi River above Arkansas City, Ark.	<0.02	0.039	<0.02	22	23	24	<0.1	<0.1	<0.1
3-08	White River at Mile 1.0, Ark.	<0.02	--	--	3.9	--	--	<0.1	--	--
3-10	Yazoo River at Mile 1.0, Miss.	<0.02	--	--	8.8	--	--	<0.1	--	--
3-10	Mississippi River below Vicksburg, Miss.	<0.02	<0.02	0.068	21	22	24	<0.1	<0.1	<0.1
3-12	Mississippi River near St. Francisville, La.	<0.02	<0.02	<0.02	21	22	21	<0.1	<0.1	<0.1
3-14	Mississippi River below Belle Chasse, La.	0.054	0.021	<0.02	21	23	22	<0.1	<0.1	<0.1

Table 23.-- Concentration data for dissolved trace elements in water samples collected from the Mississippi River and some of its tributaries during the February-March 1990 cruise -- Continued

Date		Chromium			Cobalt			Copper		
1990	Sampling site	A	B	Grab	A	B	Grab	A	B	Grab
2-23	Cumberland River near Smithland, Ky.	<0.2	<0.2	0.65	0.29	0.27	0.27	0.74	0.83	0.61
2-24	Tennessee River near Calvert City, Ky.	<0.2	<0.2	0.51	0.2	0.18	0.19	0.77	0.7	0.75
2-25	Mississippi River near Cache, Ill.	0.58	--	0.61	0.5	--	0.56	1.8	--	1.7
2-28	Wabash River near New Haven, Ill.	<0.2	<0.2	<0.2	0.52	0.49	0.52	1.8	1.6	1.6
3-01	Ohio River at Uniontown, Ky.	<0.2	<0.2	<0.2	0.32	0.31	0.31	1.4	1.6	1.4
3-03	Ohio River at Olmsted, Ill.	<0.2	<0.2	<0.2	0.23	0.21	0.26	1.4	1.2	1.3
3-04	Mississippi River below Hickman, Ky.	<0.2	<0.2	<0.2	0.27	0.26	0.28	1.3	1.2	1.3
3-05	Mississippi River below Fulton, Tenn.	0.3	<0.2	<0.2	0.29	0.25	0.26	1.4	1.4	1.1
3-07	Mississippi River at Helena, Ark.	<0.2	0.4	<0.2	0.28	0.27	0.32	1.5	1.7	1.3
3-07	Arkansas River at Mile 1.0, Ark.	<0.2	--	--	0.16	--	--	0.87	--	--
3-08	Mississippi River above Arkansas City, Ark.	<0.2	<0.2	<0.2	0.25	0.24	0.29	1.2	1.2	1.2
3-08	White River at Mile 1.0, Ark.	<0.2	--	--	0.12	--	--	0.74	--	--
3-10	Yazoo River at Mile 1.0, Miss.	<0.2	--	--	0.025	--	--	1.3	--	--
3-10	Mississippi River below Vicksburg, Miss.	<0.2	<0.2	0.23	0.22	0.23	0.48	1.5	1.5	1.7
3-12	Mississippi River near St. Francisville, La.	<0.2	<0.2	<0.2	0.22	0.26	0.22	1.4	1.9	1.3
3-14	Mississippi River below Belle Chasse, La.	<0.2	<0.2	<0.2	0.26	0.25	0.26	3	1.4	1.4

Table 23.-- Concentration data for dissolved trace elements in water samples collected from the Mississippi River and some of its tributaries during the February-March 1990 cruise -- Continued

Date		Iron			Lead			Lithium		
1990	Sampling site	A	B	Grab	A	B	Grab	A	B	Grab
2-23	Cumberland River near Smithland, Ky.	0.015	0.009	0.014	<0.06	<0.06	<0.06	0.74	0.73	0.77
2-24	Tennessee River near Calvert City, Ky.	0.018	0.02	0.024	<0.06	<0.06	<0.06	0.62	0.6	0.61
2-25	Mississippi River near Cache, Ill.	0.006	--	0.014	<0.06	--	<0.06	8.6	--	9.3
2-28	Wabash River near New Haven, Ill.	0.005	0.005	0.011	<0.06	<0.06	<0.06	1.5	1.6	1.6
3-01	Ohio River at Uniontown, Ky.	0.007	0.016	0.009	<0.06	<0.06	<0.06	2.9	2.6	2.6
3-03	Ohio River at Olmsted, Ill.	<0.005	0.013	0.006	0.092	<0.06	0.064	1.7	1.6	2
3-04	Mississippi River below Hickman, Ky.	0.006	<0.005	<0.005	0.1	0.07	0.12	2.7	2.6	3.2
3-05	Mississippi River below Fulton, Tenn.	0.054	0.005	<0.005	0.13	0.1	<0.06	2.6	2.6	2.8
3-07	Mississippi River at Helena, Ark.	0.006	0.015	0.005	<0.06	0.079	<0.06	2.5	2.4	2.7
3-07	Arkansas River at Mile 1.0, Ark.	<0.005	--	--	<0.06	--	--	2.4	--	--
3-08	Mississippi River above Arkansas City, Ark.	0.007	0.014	0.012	<0.06	<0.06	0.076	2.3	2.2	2.5
3-08	White River at Mile 1.0, Ark.	0.016	--	--	<0.06	--	--	0.18	--	--
3-10	Yazoo River at Mile 1.0, Miss.	0.031	--	--	<0.06	--	--	0.95	--	--
3-10	Mississippi River below Vicksburg, Miss.	<0.005	0.011	0.4	<0.06	<0.06	0.48	2.2	2.1	2.7
3-12	Mississippi River near St. Francisville, La.	<0.005	<0.005	<0.005	<0.06	<0.06	<0.06	2.1	2.2	2
3-14	Mississippi River below Belle Chasse, La.	0.006	<0.005	0.005	<0.06	<0.06	0.072	2.1	2.2	2.2

Table 23.-- Concentration data for dissolved trace elements in water samples collected from the Mississippi River and some of its tributaries during the February-March 1990 cruise -- Continued

Date		Manganese			Molybdenum			Nickel		
1990	Sampling site	A	B	Grab	A	B	Grab	A	B	Grab
2-23	Cumberland River near Smithland, Ky.	1.5	1.3	2	0.8	0.74	0.96	6	5.8	5.1
2-24	Tennessee River near Calvert City, Ky.	1.1	1.1	5.4	0.26	0.16	0.62	3.4	3.1	3
2-25	Mississippi River near Cache, Ill.	1.3	--	1.1	2.5	--	2.5	8.8	--	9.7
2-28	Wabash River near New Haven, Ill.	3.4	3.6	2.8	1.7	1.7	1.8	9.1	9.9	9.5
3-01	Ohio River at Uniontown, Ky.	6.3	5.7	3.9	1.6	1.5	1.6	6.8	6.5	6.1
3-03	Ohio River at Olmsted, Ill.	3.7	3.6	2.9	1.4	1.2	1.5	6	5.7	6.5
3-04	Mississippi River below Hickman, Ky.	3.1	3.1	5.5	1.3	1.4	1.5	6.3	5.9	6.6
3-05	Mississippi River below Fulton, Tenn.	4.4	1.8	3.3	1.3	1.3	1.2	6	6.1	5.8
3-07	Mississippi River at Helena, Ark.	1.5	1.7	1.1	1.3	1.2	1.2	6.1	5.5	5.9
3-07	Arkansas River at Mile 1.0, Ark.	0.71	--	--	0.26	--	--	4.3	--	--
3-08	Mississippi River above Arkansas City, Ark.	1.4	1.5	1.8	1	0.94	0.91	5.1	5.1	5.3
3-08	White River at Mile 1.0, Ark.	28	--	--	<0.09	--	--	3.1	--	--
3-10	Yazoo River at Mile 1.0, Miss.	9.4	--	--	<0.09	--	--	2.4	--	--
3-10	Mississippi River below Vicksburg, Miss.	1	1.1	22	0.93	0.99	0.93	4.7	4.8	5.8
3-12	Mississippi River near St. Francisville, La.	1.8	1.7	2.3	1	0.91	0.86	4.7	5.5	4.9
3-14	Mississippi River below Belle Chasse, La.	6.3	6.2	6.9	0.97	1	1	4.8	5	4.9

Table 23.-- Concentration data for dissolved trace elements in water samples collected from the Mississippi River and some of its tributaries during the February-March 1990 cruise -- Continued

Date		Strontium			Thallium			Uranium		
1990	Sampling site	A	B	Grab	A	B	Grab	A	B	Grab
2-23	Cumberland River near Smithland, Ky.	0.088	0.082	0.079	<0.05	<0.05	0.052	<0.06	<0.06	0.13
2-24	Tennessee River near Calvert City, Ky.	0.046	0.045	0.26	<0.05	<0.05	<0.05	<0.06	<0.06	<0.06
2-25	Mississippi River near Cache, Ill.	0.16	--	0.19	<0.05	--	<0.05	1.9	--	2.1
2-28	Wabash River near New Haven, Ill.	0.11	0.11	0.13	<0.05	<0.05	<0.05	0.7	0.79	0.83
3-01	Ohio River at Uniontown, Ky.	0.18	0.17	0.19	<0.05	0.05	0.083	0.31	0.15	0.44
3-03	Ohio River at Olmsted, Ill.	0.11	0.12	0.15	<0.05	<0.05	<0.05	0.42	0.37	0.45
3-04	Mississippi River below Hickman, Ky.	0.13	0.13	0.14	<0.05	<0.05	<0.05	0.69	0.65	0.69
3-05	Mississippi River below Fulton, Tenn.	0.11	0.13	0.14	<0.05	<0.05	<0.05	0.62	0.65	0.71
3-07	Mississippi River at Helena, Ark.	0.13	0.11	0.12	<0.05	<0.05	<0.05	0.75	0.58	0.61
3-07	Arkansas River at Mile 1.0, Ark.	0.18	--	--	<0.05	--	--	0.34	--	--
3-08	Mississippi River above Arkansas City, Ark.	0.12	0.12	0.11	<0.05	<0.05	<0.05	0.68	0.6	0.61
3-08	White River at Mile 1.0, Ark.	0.025	--	--	<0.05	--	--	<0.06	--	--
3-10	Yazoo River at Mile 1.0, Miss.	0.054	--	--	<0.05	--	--	<0.06	--	--
3-10	Mississippi River below Vicksburg, Miss.	0.1	0.098	0.12	<0.05	<0.05	<0.05	0.53	0.54	0.69
3-12	Mississippi River near St. Francisville, La.	0.11	0.11	0.11	<0.05	<0.05	<0.05	0.52	0.57	0.54
3-14	Mississippi River below Belle Chasse, La.	0.11	0.11	0.11	<0.05	<0.05	<0.05	0.77	0.67	0.67

Table 23.-- Concentration data for dissolved trace elements in water samples collected from the Mississippi River and some of its tributaries during the February-March 1990 cruise -- Continued

Date		Vanadium			Zinc		
1990	Sampling site	A	B	Grab	A	B	Grab
2-23	Cumberland River near Smithland, Ky.	0.56	0.57	0.72	2.4	1.7	0.53
2-24	Tennessee River near Calvert City, Ky.	0.52	0.53	0.57	2.3	1.1	1.2
2-25	Mississippi River near Cache, Ill.	1.5	--	1.6	3	--	3.7
2-28	Wabash River near New Haven, Ill.	0.46	0.53	0.58	1.3	1.9	1.3
3-01	Ohio River at Uniontown, Ky.	0.39	0.33	0.3	2.1	2.7	2
3-03	Ohio River at Olmsted, Ill.	0.41	0.34	0.33	4.6	1.7	1.3
3-04	Mississippi River below Hickman, Ky.	0.51	0.58	0.55	1.4	1.5	1.5
3-05	Mississippi River below Fulton, Tenn.	0.73	0.59	0.63	1.5	3	1.2
3-07	Mississippi River at Helena, Ark.	0.71	0.73	0.52	1.3	3.2	1.2
3-07	Arkansas River at Mile 1.0, Ark.	0.071	--	--	1.1	--	--
3-08	Mississippi River above Arkansas City, Ark.	0.54	0.54	0.63	1.3	1.5	2.9
3-08	White River at Mile 1.0, Ark.	<0.07	--	--	1	--	--
3-10	Yazoo River at Mile 1.0, Miss.	<0.07	--	--	0.63	--	--
3-10	Mississippi River below Vicksburg, Miss.	0.58	0.57	1.2	1.6	2.5	3.5
3-12	Mississippi River near St. Francisville, La.	0.58	0.58	0.56	0.93	12	1.4
3-14	Mississippi River below Belle Chasse, La.	0.81	0.83	0.83	2.3	1.7	1.9

Table 24.-- Concentration data for dissolved trace elements in water samples collected from the Mississippi River and some of its tributaries during the May-June 1990 cruise

[A, Composite A; B, Composite B; --, not determined; <, less than the detection limit; All results are in micrograms per liter, except for iron and strontium, which are in milligrams per liter]

Date		Aluminum			Arsenic			Barium		
1990	Sampling site	A	B	Grab	A	B	Grab	A	B	Grab
6-07	Illinois River at Valley City, Ill.	10	10	2.9	0.71	0.71	<0.6	64	68	75
6-10	Missouri River at St. Charles, Mo.[1]	39	--	--	0.89	--	0.63	81	--	99
6-11	Mississippi River below Grafton, Ill.	5.8	5.8	17	1.0	1	0.78	76	78	78
6-13	Mississippi River at Thebes, Ill.	11	11	6.4	1.7	2.3	1.4	78	77	83
6-14	Ohio River at Olmsted, Ill.	11	11	7.6	1.1	<0.6	0.92	30	32	32
6-18	Mississippi River below Memphis, Tenn.	11	15	13	0.94	0.94	1.2	59	64	62
6-19	White River at Mile 1.0, Ark.	--	--	1.4	--	--	2.7	--	--	35
6-19	Arkansas River at Mile 1.0, Ark.	--	--	2.6	--	--	1.9	--	--	55
6-20	Mississippi River below Arkansas City, Ark.	9.2	14	3.7	1.0	1	2.1	55	64	59
6-22	Yazoo River below Steele Bayou, Miss.	3.5	3.5	2.3	4.4	4.2	5.1	33	35	37
6-23	Mississippi River below Vicksburg, Miss.	4.8	4.8	8.3	1.5	1.5	2.2	56	57	57
6-25	Mississippi River near St. Francisville, La.	13	13	3.5	1.9	1.9	1.6	57	59	57
6-27	Mississippi River below Belle Chasse, La.	5.6	5.7	4.1	1.7	2	2.2	58	57	62

Table 24.-- Concentration data for dissolved trace elements in water samples collected from the Mississippi River and some of its tributaries during the May-June 1990 cruise -- Continued

Date		Beryllium			Boron			Cadmium		
1990	Sampling site	A	B	Grab	A	B	Grab	A	B	Grab
6-07	Illinois River at Valley City, Ill.	<0.02	<0.02	<0.02	96	96	29	<0.1	<0.1	<0.1
6-10	Missouri River at St. Charles, Mo.[1]	0.032	--	0.23	34	--	36	<0.1	--	<0.1
6-11	Mississippi River below Grafton, Ill.	<0.02	0.028	0.05	33	33	36	<0.1	<0.1	<0.1
6-13	Mississippi River at Thebes, Ill.	0.03	0.028	0.1	36	36	35	<0.1	<0.1	<0.1
6-14	Ohio River at Olmsted, Ill.	0.02	0.047	<0.02	30	29	36	<0.1	<0.1	<0.1
6-18	Mississippi River below Memphis, Tenn.	<0.02	<0.02	<0.02	39	41	38	<0.1	<0.1	<0.1
6-19	White River at Mile 1.0, Ark.	--	--	<0.02	--	--	9.2	--	--	<0.1
6-19	Arkansas River at Mile 1.0, Ark.	--	--	<0.02	--	--	24	--	--	<0.1
6-20	Mississippi River below Arkansas City, Ark.	<0.02	<0.02	<0.02	35	34	33	<0.1	<0.1	<0.1
6-22	Yazoo River below Steele Bayou, Miss.	<0.02	<0.02	<0.02	22	26	24	<0.1	<0.1	<0.1
6-23	Mississippi River below Vicksburg, Miss.	<0.02	<0.02	0.044	33	38	36	<0.1	<0.1	0.14
6-25	Mississippi River near St. Francisville, La.	<0.02	<0.02	0.038	32	32	32	<0.1	<0.1	<0.1
6-27	Mississippi River below Belle Chasse, La.	<0.02	0.009	<0.02	26	31	35	<0.1	<0.1	<0.1

Table 24.-- Concentration data for dissolved trace elements in water samples collected from the Mississippi River and some of its tributaries during the May-June 1990 cruise -- Continued

Date		Chromium			Cobalt			Copper		
1990	Sampling site	A	B	Grab	A	B	Grab	A	B	Grab
6-07	Illinois River at Valley City, Ill.	0.18	<0.2	<0.2	0.61	0.7	0.39	1.5	1.5	1.5
6-10	Missouri River at St. Charles, Mo.[1]	<0.2	--	2.4	0.28	--	1.2	1.4	--	3.6
6-11	Mississippi River below Grafton, Ill.	<0.2	<0.2	<0.2	0.38	0.36	0.38	2.1	1.4	1.3
6-13	Mississippi River at Thebes, Ill.	<0.2	<0.2	1.4	0.32	0.33	0.28	2.2	1.7	1.5
6-14	Ohio River at Olmsted, Ill.	<0.2	<0.2	<0.2	0.31	0.45	0.26	1.5	1.5	1.3
6-18	Mississippi River below Memphis, Tenn.	<0.2	<0.2	<0.2	0.19	0.27	0.3	1.6	1.6	1.6
6-19	White River at Mile 1.0, Ark.	--	--	0.81	--	--	0.2	--	--	0.98
6-19	Arkansas River at Mile 1.0, Ark.	--	--	<0.2	--	--	0.23	--	--	1.5
6-20	Mississippi River below Arkansas City, Ark.	0.22	2.5	0.41	0.17	0.63	0.3	1.8	2.1	1.6
6-22	Yazoo River below Steele Bayou, Miss.	<0.2	<0.2	<0.2	0.03	0.2	0.14	1.8	1.8	1.6
6-23	Mississippi River below Vicksburg, Miss.	<0.2	<0.2	<0.2	0.32	0.35	0.33	1.7	1.7	1.6
6-25	Mississippi River near St. Francisville, La.	<0.2	0.23	<0.2	0.30	0.37	0.31	1.9	1.9	2
6-27	Mississippi River below Belle Chasse, La.	<0.2	<0.2	<0.2	0.24	0.28	0.29	1.6	1.5	1.5

Table 24.-- Concentration data for dissolved trace elements in water samples collected from the Mississippi River and some of its tributaries during the May-June 1990 cruise -- Continued

Date		Iron			Lead			Lithium		
1990	Sampling site	A	B	Grab	A	B	Grab	A	B	Grab
6-07	Illinois River at Valley City, Ill.	--	0.008	<0.005	0.08	0.11	<0.06	4.3	4.3	3.8
6-10	Missouri River at St. Charles, Mo.[1]	0.034	--	2.3	<0.06	--	2.1	8.3	--	10
6-11	Mississippi River below Grafton, Ill.	--	<0.005	0.009	<0.06	<0.06	<0.06	3.7	3.2	3.5
6-13	Mississippi River at Thebes, Ill.	--	0.029	0.007	<0.06	<0.06	<0.06	5.1	5.1	4.9
6-14	Ohio River at Olmsted, Ill.	--	<0.005	<0.005	<0.06	<0.06	<0.06	1.8	1.8	2.2
6-18	Mississippi River below Memphis, Tenn.	--	0.009	0.005	<0.06	<0.06	<0.06	3.7	3.8	3.5
6-19	White River at Mile 1.0, Ark.	--	--	<0.005	--	--	<0.06	--	--	0.31
6-19	Arkansas River at Mile 1.0, Ark.	--	--	<0.005	--	--	<0.06	--	--	1.7
6-20	Mississippi River below Arkansas City, Ark.	--	0.65	<0.005	<0.06	0.62	<0.06	3.2	3.8	3.3
6-22	Yazoo River below Steele Bayou, Miss.	--	0.011	0.006	<0.06	<0.06	<0.06	1.5	1.7	1.6
6-23	Mississippi River below Vicksburg, Miss.	--	<0.005	<0.005	<0.06	<0.06	<0.06	2.9	3.4	3
6-25	Mississippi River near St. Francisville, La.	--	0.094	<0.005	<0.06	0.12	<0.06	2.9	3.2	3.1
6-27	Mississippi River below Belle Chasse, La.	--	<0.005	<0.005	<0.06	<0.06	<0.06	2.8	3.3	3.3

Table 24.-- Concentration data for dissolved trace elements in water samples collected from the Mississippi River and some of its tributaries during the May-June 1990 cruise -- Continued

Date		Manganese			Molybdenum			Nickel		
1990	Sampling site	A	B	Grab	A	B	Grab	A	B	Grab
6-07	Illinois River at Valley City, Ill.	3.0	8	0.41	3.7	3.6	1.4	--	14	8.4
6-10	Missouri River at St. Charles, Mo.[1]	1.9	--	65	1.9	--	0.65	6.2	--	9.5
6-11	Mississippi River below Grafton, Ill.	0.41	0.49	1	1.9	1.9	1.7	--	8.4	8.8
6-13	Mississippi River at Thebes, Ill.	0.36	0.7	0.52	1.7	1.7	1.8	--	7.4	7.3
6-14	Ohio River at Olmsted, Ill.	0.19	0.47	0.64	1.5	1.5	1.4	--	6.4	6.5
6-18	Mississippi River below Memphis, Tenn.	0.30	0.75	0.57	1.7	1.7	1.7	--	6.6	6.6
6-19	White River at Mile 1.0, Ark.	--	--	28	--	--	0.67	--	--	4.6
6-19	Arkansas River at Mile 1.0, Ark.	--	--	0.93	--	--	0.56	--	--	6.2
6-20	Mississippi River below Arkansas City, Ark.	0.91	34	0.55	1.0	0.93	1.6	--	7	6.6
6-22	Yazoo River below Steele Bayou, Miss.	58	68	80	0.61	0.65	0.48	--	3.1	3.3
6-23	Mississippi River below Vicksburg, Miss.	0.67	0.67	2.9	1.5	1.5	1.7	--	6.1	6.1
6-25	Mississippi River near St. Francisville, La.	3.1	9.3	1.5	1.5	1.5	1.5	--	6.7	6.6
6-27	Mississippi River below Belle Chasse, La.	0.76	0.74	1.2	1.5	1.7	1.6	--	6.5	6.4

Table 24.-- Concentration data for dissolved trace elements in water samples collected from the Mississippi River and some of its tributaries during the May-June 1990 cruise -- Continued

Date		Strontium			Thallium			Uranium		
1990	Sampling site	A	B	Grab	A	B	Grab	A	B	Grab
6-07	Illinois River at Valley City, Ill.	0.22	0.21	0.11	<0.05	<0.05	<0.05	1.8	1.8	1.6
6-10	Missouri River at St. Charles, Mo.[1]	0.19	--	0.2	<0.05	--	<0.05	1.8	--	1.8
6-11	Mississippi River below Grafton, Ill.	0.14	0.12	0.12	<0.05	<0.05	<0.05	1.8	2.1	1.7
6-13	Mississippi River at Thebes, Ill.	0.16	0.16	0.16	<0.05	<0.05	<0.05	1.5	1.6	1.3
6-14	Ohio River at Olmsted, Ill.	0.14	0.12	0.13	<0.05	<0.05	<0.05	0.24	0.18	0.24
6-18	Mississippi River below Memphis, Tenn.	0.16	0.15	0.15	<0.05	<0.05	<0.05	0.83	0.83	0.91
6-19	White River at Mile 1.0, Ark.	--	--	0.041	--	--	<0.05	--	--	0.17
6-19	Arkansas River at Mile 1.0, Ark.	--	--	0.16	--	--	<0.05	--	--	0.52
6-20	Mississippi River below Arkansas City, Ark.	0.15	0.14	0.14	<0.05	0.051	<0.05	0.81	0.81	0.64
6-22	Yazoo River below Steele Bayou, Miss.	0.059	0.057	0.058	<0.05	<0.05	<0.05	<0.06	0.11	0.074
6-23	Mississippi River below Vicksburg, Miss.	0.15	0.14	0.14	<0.05	0.051	<0.05	0.83	0.69	0.66
6-25	Mississippi River near St. Francisville, La.	0.15	0.14	0.14	<0.05	<0.05	<0.05	0.79	0.86	0.73
6-27	Mississippi River below Belle Chasse, La.	0.15	0.15	0.15	<0.05	<0.05	<0.05	0.64	0.67	0.6

Table 24.-- Concentration data for dissolved trace elements in water samples collected from the Mississippi River and some of its tributaries during the May-June 1990 cruise -- Continued

Date		Vanadium			Zinc		
1990	Sampling site	A	B	Grab	A	B	Grab
6-07	Illinois River at Valley City, Ill.	1.9	1.8	1.8	2.2	2.2	0.73
6-10	Missouri River at St. Charles, Mo.[1]	2.1	--	6.2	1.1	--	9.7
6-11	Mississippi River below Grafton, Ill.	1.7	1.7	1.9	0.94	0.81	0.92
6-13	Mississippi River at Thebes, Ill.	2.4	2.1	1.9	0.88	1.6	0.58
6-14	Ohio River at Olmsted, Ill.	0.63	0.63	0.55	0.87	1.9	0.71
6-18	Mississippi River below Memphis, Tenn.	1.5	1.5	1.5	0.57	0.56	0.76
6-19	White River at Mile 1.0, Ark.	--	--	0.66	--	--	0.96
6-19	Arkansas River at Mile 1.0, Ark.	--	--	1.2	--	--	0.96
6-20	Mississippi River below Arkansas City, Ark.	1.5	2.7	1.6	0.91	3.8	0.7
6-22	Yazoo River below Steele Bayou, Miss.	1.0	1.1	1	0.73	0.73	1.2
6-23	Mississippi River below Vicksburg, Miss.	1.5	1.5	1.4	0.63	0.63	0.79
6-25	Mississippi River near St. Francisville, La.	1.5	1.7	1.5	0.93	1.7	0.73
6-27	Mississippi River below Belle Chasse, La.	1.5	1.6	1.9	1.2	0.73	1.3

[1]Single vertical composite near centroid of flow

Table 25.-- Concentration data for dissolved major elements in water samples collected from the Mississippi River and some of its tributaries during the July-August 1987 cruise

[A, Composite A; B, Composite B; --, not determined; All results are in milligrams per liter]

Date		Calcium			Magnesium			Potassium			Sodium			Silicon (as SiO_2)		
1987	Sampling site	A	B	Grab	A	B	Grab	A	B	Grab	A	B	Grab	A	B	Grab
7-17	Illinois River below Meredosia, Ill.	63	--	59	26	--	25	4.6	--	--	41	--	38	0.46	--	3
7-18	Mississippi River near Winfield, Mo.	41	--	42	21	--	21	3	--	3.1	11	--	11	5.2	--	5.3
7-20	Missouri River at Hermann, Mo.	45	45	--	12	12	--	5.8	5.9	--	30	30	--	15	16	--
7-21	Mississippi River at Hartford, Ill.	44	44	--	20	20	--	3.4	3.4	--	15	15	--	8	7.3	--
7-22	Mississippi River at St. Louis, Mo.	46	46	--	15	15	--	--	--	--	25	25	--	11	12	--
7-23	Mississippi River at Chester, Ill.	43	--	--	15	--	--	4.7	4.8	--	23	--	--	10	--	--
7-26	Ohio River below Smithland Locks and Dam, Ill.-Ky.	46	--	--	14	--	--	3.6	--	--	17	--	--	7.4	--	--
7-27	Ohio River at Olmsted, Ill.	36	37	--	8.8	8.8	--	2.8	2.8	--	13	13	--	5.2	4.6	--
7-28	Mississippi River below Hickman, Ky.	44	44	--	14	14	--	--	4.8	--	24	23	--	9.4	8.5	--
7-28	Mississippi River above Hatchie River, Tenn.	--	--	39	--	--	12	--	--	4.1	--	--	18	--	--	9.4
7-28	Hatchie River at Highway 61 bridge, Tenn.	--	--	5.9	--	--	1.6	--	--	2.7	--	--	5.2	--	--	13
7-30	Mississippi River at Helena, Ark.	40	41	--	13	13	--	4.1	4.2	--	19	19	--	10	10	--
7-31	White River at Mile 11.5, Ark.	33	33	--	14	14	--	1.6	1.5	--	3.7	3.7	--	6.1	7.1	--
8-01	Arkansas River at Mile 55.9, Ark.	49	51	--	15	15	--	5.4	5.3	--	95	97	--	3.6	3	--
8-02	Mississippi River above Arkansas City, Ark.	44	43	--	14	14	--	4.2	4.1	--	28	28	--	10	9.5	--
8-04	Yazoo River at Highway 61, Miss.	--	--	25	--	--	7.9	--	--	3.2	--	--	12	--	--	10
8-04	Mississippi River below Vicksburg, Miss.	45	44	--	14	14	--	5.1	4.1	--	27	27	--	14	8.5	--
8-06	Old River Outflow Channel near Knox Landing, La.	43	44	--	13	13	--	4.1	4	--	25	25	--	9	8.5	--
8-07	Mississippi River near St. Francisville, La.	44	44	--	14	14	--	4.1	4	--	26	26	--	10	9.6	--
8-08	Mississippi River at Plaquemine, La.	--	--	42	--	--	13	--	--	4.1	--	--	25	--	--	9.4
8-08	Mississippi River at Union, La.	--	--	41	--	--	13	--	--	4	--	--	26	--	--	8
8-08	Mississippi River at Luling Bridge, La.	--	--	41	--	--	13	--	--	4	--	--	24	--	--	8.7
8-09	Mississippi River below Belle Chasse, La.	42	--	--	14	--	--	4.4	--	--	35	--	--	6.5	--	--

Table 26.-- Concentration data for dissolved major elements in water samples collected from the Mississippi River and some of its tributaries during the November-December 1987 cruise

[A, Composite A; B, Composite B; --, not determined; All results are in milligrams per liter]

Date		Calcium			Magnesium			Potassium		
1987	Sampling site	A	B	Grab	A	B	Grab	A	B	Grab
11-29	Illinois River below Meredosia, Ill.	64	--	--	29	--	--	4.5	--	--
11-30	Mississippi River near Winfield, Mo.	40	43	--	21	22	--	2.7	2.8	--
12-02	Missouri River at St. Charles, Mo.	56	55	--	19	19	--	4.7	4.7	--
12-03	Mississippi River at St. Louis, Mo.	50	47	--	20	19	--	4.6	3.8	--
12-05	Mississippi River at Thebes, Ill.	46	48	--	19	20	--	3.9	3.9	--
12-06	Ohio River at Olmsted, Ill.	38	38	--	11	11	--	3.3	3.2	--
12-07	Mississippi River below Hickman, Ky.	44	44	--	16	16	--	3.6	3.5	--
12-08	Mississippi River at Fulton, Tenn.	44	44	--	16	16	--	3.5	3.6	--
12-11	Mississippi River at Helena, Ark.	42	43	--	15	15	--	3.5	3.5	--
12-12	White River at Mile 11.5, Ark.	23	23	--	8.8	8.8	--	2.4	2.4	--
12-13	Mississippi River above Arkansas City, Ark.	40	41	--	15	15	--	3.5	3.5	--
12-14	Yazoo River at Mile 10, Miss.	8	8.1	--	2.8	2.8	--	3.3	3.3	--
12-15	Mississippi River below Vicksburg, Miss.	38	38	--	14	14	--	3.5	3.5	--
12-17	Old River Outflow Channel near Knox Landing, La.	39	39	--	14	14	--	3.7	3.5	--
12-18	Mississippi River near St. Francisville, La.	40	40	--	14	14	--	3.5	3.5	--
12-20	Mississippi River below Belle Chasse, La.	36	37	--	14	14	--	3.7	3.7	--

Table 26.-- Concentration data for dissolved major elements in water samples collected from the Mississippi River and some of its tributaries during the November-December 1987 cruise -- Continued

Date		Sodium			Silicon (as SiO_2)		
1987	Sampling site	A	B	Grab	A	B	Grab
11-29	Illinois River below Meredosia, Ill.	44	--	--	3.3	--	--
11-30	Mississippi River near Winfield, Mo.	12	13	--	1.3	0.92	--
12-02	Missouri River at St. Charles, Mo.	44	43	--	12	11	--
12-03	Mississippi River at St. Louis, Mo.	28	26	--	7.6	8.1	--
12-05	Mississippi River at Thebes, Ill.	25	27	--	9.9	7.5	--
12-06	Ohio River at Olmsted, Ill.	24	23	--	5.6	6.4	--
12-07	Mississippi River below Hickman, Ky.	25	25	--	7	6.2	--
12-08	Mississippi River at Fulton, Tenn.	26	26	--	7.4	6.4	--
12-11	Mississippi River at Helena, Ark.	25	25	--	6.1	6.9	--
12-12	White River at Mile 11.5, Ark.	3.7	3.7	--	9.8	9	--
12-13	Mississippi River above Arkansas City, Ark.	28	28	--	5.3	5.2	--
12-14	Yazoo River at Mile 10, Miss.	5.7	5.7	--	11	10	--
12-15	Mississippi River below Vicksburg, Miss.	25	26	--	5.7	6	--
12-17	Old River Outflow Channel near Knox Landing, La.	26	27	--	5.9	7.3	--
12-18	Mississippi River near St. Francisville, La.	27	27	--	7.8	6.8	--
12-20	Mississippi River below Belle Chasse, La.	33	34	--	6.4	5.9	--

Table 27.-- Concentration data for dissolved major elements in water samples collected from the Mississippi River and some of its tributaries during the May-June 1988 cruise

[A, Composite A; B, Composite B; --, not determined; <, less than detection limit; All results are in milligrams per liter]

Date		Calcium			Magnesium			Potassium		
1988	Sampling site	A	B	Grab	A	B	Grab	A	B	Grab
5-16	Illinois River below Meredosia, Ill.	61	62	63	30	30	31	4	4.1	4.1
5-17	Mississippi River near Winfield, Mo.	34	39	38	21	23	22	3.3	3.4	3.3
5-19	Missouri River at Hermann, Mo.	63	63	57	21	21	19	7.4	7.3	7.2
5-20	Mississippi River at St. Louis, Mo.	52	52	43	23	23	22	5.6	4.6	4
5-22	Mississippi River at Thebes, Ill.	54	53	50	24	23	22	4.6	4.6	4.6
5-23	Ohio River at Olmsted, Ill.	37	36	37	12	12	13	3	3	3
5-24	Mississippi River below Hickman, Ky.	46	46	50	18	18	21	3.9	3.9	4.3
5-26	Mississippi River at Fulton, Tenn.	45	42	44	17	17	17	3.9	3.9	3.9
5-28	Mississippi River at Helena, Ark.	43	42	43	16	16	17	4	3.9	4
5-29	White River at Mile 11.5, Ark.	33	33	33	12	12	12	3.9	2.1	2.1
5-29	Arkansas River at Mile 1.0, Ark.	--	--	48	--	--	12	--	--	4.1
5-30	Mississippi River above Arkansas City, Ark.	42	42	43	16	16	16	3.8	3.8	3.8
6-01	Yazoo River at Mile 10, Miss.	25	--	25	7.9	--	7.9	3.4	--	3.4
6-02	Mississippi River below Vicksburg, Miss.	45	45	44	17	17	17	3.8	3.8	3.8
6-04	Old River Outflow Channel near Knox Landing, La.	43	46	--	16	17	--	3.8	3.8	--
6-05	Mississippi River near St. Francisville, La.	46	47	47	17	17	17	3.8	3.8	3.9
6-07	Mississippi River below Belle Chasse, La.	50	45	46	18	17	17	4.1	4.1	4.1

Table 27.-- Concentration data for dissolved major elements in water samples collected from the Mississippi River and some of its tributaries during the May-June 1988 cruise -- Continued

Date		Sodium			Silicon (as SiO_2)		
1988	Sampling site	A	B	Grab	A	B	Grab
5-16	Illinois River below Meredosia, Ill.	34	34	35	0.42	1.1	2.6
5-17	Mississippi River near Winfield, Mo.	11	12	12	0.31	--	0.13
5-19	Missouri River at Hermann, Mo.	54	54	47	9.1	10	8.4
5-20	Mississippi River at St. Louis, Mo.	32	32	21	3.9	4.2	1.4
5-22	Mississippi River at Thebes, Ill.	34	33	31	3.9	3.9	3.6
5-23	Ohio River at Olmsted, Ill.	17	17	18	0.34	0.33	0.2
5-24	Mississippi River below Hickman, Ky.	26	26	29	2.3	2.3	3.1
5-26	Mississippi River at Fulton, Tenn.	24	23	24	2.1	2	2
5-28	Mississippi River at Helena, Ark.	22	22	23	2.9	2	3.5
5-29	White River at Mile 11.5, Ark.	3.5	3.6	3.6	3.9	3.9	3.8
5-29	Arkansas River at Mile 1.0, Ark.	--	--	62	--	--	3.7
5-30	Mississippi River above Arkansas City, Ark.	22	22	22	2	2	1.9
6-01	Yazoo River at Mile 10, Miss.	13	--	13	10	--	10
6-02	Mississippi River below Vicksburg, Miss.	23	23	23	1.7	1.7	1.8
6-04	Old River Outflow Channel near Knox Landing, La.	22	24	<0.01	1.9	1.9	<0.04
6-05	Mississippi River near St. Francisville, La.	24	24	24	1.9	1.9	1.9
6-07	Mississippi River below Belle Chasse, La.	34	30	31	2.5	1.7	1.6

Table 28.-- Concentration data for dissolved major elements in water samples collected from the Mississippi River and some of its tributaries during the March-April 1989 cruise

[A, Composite A; B, Composite B; --, not determined; All results are in milligrams per liter]

Date		Calcium			Magnesium			Potassium		
1989	Sampling site	A	B	Grab	A	B	Grab	A	B	Grab
3-09	Illinois River at Hardin, Ill.	79	80	79	31	31	31	4.2	4.2	4.1
3-10	Mississippi River near Winfield, Mo.	50	50	50	21	21	21	3.5	3.4	3.2
3-12	Missouri River at Hermann, Mo.	45	44	42	16	16	16	3.7	3.5	3.5
3-13	Mississippi River at St. Louis, Mo.	52	52	--	20	20	--	3.7	3.9	--
3-15	Mississippi River at Thebes, Ill.	48	48	48	18	19	19	3.7	3.8	3.6
3-16	Ohio River at Olmsted, Ill.	28	27	28	6.3	6.3	6	1.7	1.7	1.7
3-17	Mississippi River below Hickman, Ky.	31	32	31	8.5	8.8	8.4	2.3	2.2	1.9
3-19	Mississippi River below Fulton, Tenn.	31	31	31	8.5	8.6	8.6	2.1	2.2	2.2
3-21	Mississippi River at Helena, Ark.	32	31	31	8.7	8.6	8.4	2.1	2.2	1.9
3-22	White River at Mile 11.5, Ark.	18	18	18	6.7	6.7	6.8	1.5	1.5	1.5
3-23	Arkansas River at Pendleton, Ark.	24	24	26	6.2	6.2	6.6	2.2	2.2	2.1
3-24	Mississippi River above Arkansas City, Ark.	33	31	31	9.4	9.1	9.1	2.3	2.2	2.3
3-26	Yazoo River below Steele Bayou, Miss.	7.1	7.1	7.7	2.2	2.2	2.3	2.4	2.6	2.7
3-27	Mississippi River below Vicksburg, Miss.	32	32	33	9	9	9.4	2.3	2.3	2.3
3-29	Old River Outflow Channel near Knox Landing, La.	32	32	32	8.8	8.8	8.9	2.4	2.2	2.3
3-30	Mississippi River near St. Francisville, La.	31	31	31	8.7	8.8	8.8	2.3	2.4	2.3
4-01	Mississippi River below Belle Chasse, La.	31	31	31	8.6	8.6	8.6	2.4	2.3	2.3

Table 28.-- Concentration data for dissolved major elements in water samples collected from the Mississippi River and some of its tributaries during the March-April 1989 cruise -- Continued

Date		Sodium			Silicon (as SiO_2)		
1989	Sampling site	A	B	Grab	A	B	Grab
3-09	Illinois River at Hardin, Ill.	73	73	72	5.4	5.1	5.1
3-10	Mississippi River near Winfield, Mo.	18	18	18	4.7	4.6	4.3
3-12	Missouri River at Hermann, Mo.	33	32	28	9.3	9.1	8.3
3-13	Mississippi River at St. Louis, Mo.	36	36	--	5.7	5.7	--
3-15	Mississippi River at Thebes, Ill.	31	32	32	5.7	5.7	5.5
3-16	Ohio River at Olmsted, Ill.	7.4	7.4	6.8	5.4	5.4	5.4
3-17	Mississippi River below Hickman, Ky.	12	12	11	5.3	5.2	5.3
3-19	Mississippi River below Fulton, Tenn.	12	12	12	5.2	5.2	5.2
3-21	Mississippi River at Helena, Ark.	12	12	11	5.5	5.8	6.1
3-22	White River at Mile 11.5, Ark.	1.8	1.8	1.8	4.4	4.4	4.4
3-23	Arkansas River at Pendleton, Ark.	31	31	34	3.8	3.8	3.8
3-24	Mississippi River above Arkansas City, Ark.	14	13	14	5.6	5.4	5.3
3-26	Yazoo River below Steele Bayou, Miss.	3.2	3.2	3.2	5.2	5.2	5.2
3-27	Mississippi River below Vicksburg, Miss.	14	14	14	5.5	5.5	5.5
3-29	Old River Outflow Channel near Knox Landing, La.	14	14	14	5.5	5.5	5.5
3-30	Mississippi River near St. Francisville, La.	13	14	14	5.4	5.4	5.4
4-01	Mississippi River below Belle Chasse, La.	15	15	15	5.4	5.4	5.4

Table 29.-- Concentration data for dissolved major elements in water samples collected from the Mississippi River and some of its tributaries during the June 1989 cruise

[A, Composite A; B, Composite B; --, not determined; All results are in milligrams per liter]

Date		Calcium			Magnesium			Potassium		
1989	Sampling site	A	B	Grab	A	B	Grab	A	B	Grab
6-04	Illinois River at Hardin, Ill.	70	--	70	32	--	33	4.1	--	4.1
6-05	Mississippi River near Winfield, Mo.	39	38	37	19	19	19	3.3	3.2	3.3
6-07	Missouri River at Hermann, Mo.	53	53	53	23	20	20	5.1	4.9	4.9
6-08	Mississippi River at St. Louis, Mo.	49	49	47	20	20	20	4.1	4.2	3.6
6-10	Mississippi River at Thebes, Ill.	48	48	49	20	20	20	4.1	4.1	4
6-11	Ohio River at Olmsted, Ill.	40	40	40	11	11	11	2.2	2.2	2.2
6-12	Mississippi River below Hickman, Ky.	40	40	40	14	14	14	2.8	3	2.9
6-14	Mississippi River at Fulton, Tenn.	40	41	41	14	14	14	2.9	3.1	3
6-17	Mississippi River at Helena, Ark.	38	40	43	13	15	16	2.9	2.9	2.9
6-18	White River at Mile 11.5, Ark.	30	--	31	15	--	15	1.8	--	1.7
6-19	Arkansas River at Pendleton, Ark.	34	--	35	9.4	--	9.6	3	--	3
6-20	Mississippi River above Arkansas City, Ark.	34	34	34	12	12	12	2.6	2.7	2.8
6-22	Yazoo River below Steele Bayou, Miss.	5.5	5.7	5.6	1.8	1.8	1.8	2.6	2.5	2.5
6-23	Mississippi River below Vicksburg, Miss.	33	34	34	9.6	11	9.9	2.7	2.6	2.5
6-25	Old River Outflow Channel near Knox Landing, La.	32	32	31	9.5	9.4	9.2	2.5	2.5	2.5
6-26	Mississippi River near St. Francisville, La.	32	34	33	9.4	9.8	9.7	2.6	2.7	2.6
6-28	Mississippi River below Belle Chasse, La.	30	28	32	9.1	8.4	9.6	2.5	2.7	2.7

Table 29.-- Concentration data for dissolved major elements in water samples collected from the Mississippi River and some of its tributaries during the June 1989 cruise -- Continued

Date		Sodium			Silicon (as $SiO)_2$		
1989	Sampling site	A	B	Grab	A	B	Grab
6-04	Illinois River at Hardin, Ill.	41	--	41	3.3	--	3.3
6-05	Mississippi River near Winfield, Mo.	13	13	12	1.3	1.3	1.3
6-07	Missouri River at Hermann, Mo.	51	52	51	7.9	7.7	7.7
6-08	Mississippi River at St. Louis, Mo.	33	33	29	4.6	4.5	3.9
6-10	Mississippi River at Thebes, Ill.	32	32	32	4.3	4.3	4.3
6-11	Ohio River at Olmsted, Ill.	9.4	9.5	9.5	5.4	5.5	5.5
6-12	Mississippi River below Hickman, Ky.	16	17	15	4.7	4.8	4.9
6-14	Mississippi River at Fulton, Tenn.	17	17	17	4.9	4.9	4.9
6-17	Mississippi River at Helena, Ark.	15	15	16	5.2	6	6.2
6-18	White River at Mile 11.5, Ark.	3.5	--	3.5	8	--	8.2
6-19	Arkansas River at Pendleton, Ark.	82	--	85	5.9	--	5.7
6-20	Mississippi River above Arkansas City, Ark.	22	22	24	6	6	5.8
6-22	Yazoo River below Steele Bayou, Miss.	2.6	2.6	2.5	7	7.1	7.2
6-23	Mississippi River below Vicksburg, Miss.	20	20	20	5.7	5.8	5.6
6-25	Old River Outflow Channel near Knox Landing, La.	19	19	19	5.6	5.6	5.5
6-26	Mississippi River near St. Francisville, La.	19	19	19	5.6	5.7	5.7
6-28	Mississippi River below Belle Chasse, La.	21	19	22	5.3	5	5.4

Table 30.-- Concentration data for dissolved major elements in water samples collected from the Mississippi River and some of its tributaries during February-March 1990 cruise

[A, Composite A; B, Composite B; --, not determined; All results are in milligrams per liter]

Date		Calcium			Magnesium			Potassium		
1990	Sampling site	A	B	Grab	A	B	Grab	A	B	Grab
2-23	Cumberland River near Smithland, Ky.	31	30	28	4.2	4.1	3.8	1.5	1.5	1.4
2-24	Tennessee River near Calvert City, Ky.	18	17	17	3	2.9	3	1.3	1.3	1.5
2-25	Mississippi River near Cache, Ill.	41	--	47	20	--	22	4.5	--	4.5
2-28	Wabash River near New Haven, Ill.	46	44	52	16	16	18	3.2	3.2	3.1
3-01	Ohio River at Uniontown, Ky.	33	33	34	9	9	9.1	2.4	2.3	2.2
3-03	Ohio River at Olmsted, Ill.	29	32	35	7.6	8.4	9.9	2.1	2.2	2.5
3-04	Mississippi River below Hickman, Ky.	34	33	36	9.7	9.4	14	2.7	2.8	2.9
3-05	Mississippi River below Fulton, Tenn.	29	34	36	9.3	11	12	2.6	2.5	2.7
3-07	Mississippi River at Helena, Ark.	33	29	31	11	9.2	10	2.8	2.4	2.4
3-07	Arkansas River at Mile 1.0, Ark.	27	--	--	6.5	--	--	2.8	--	--
3-08	Mississippi River above Arkansas City, Ark.	31	31	27	9.9	11	8.6	2.3	2.4	2.5
3-08	White River at Mile 1.0, Ark.	16	--	--	7.1	--	--	1.9	--	--
3-10	Yazoo River at Mile 1.0, Miss.	12	--	--	3.4	--	--	2.2	--	--
3-10	Mississippi River below Vicksburg, Miss.	25	24	29	7.9	7.7	9.3	2.3	2.5	2.7
3-12	Mississippi River near St. Francisville, La.	27	27	27	8.4	8.4	8.3	2.4	2.5	2.6
3-14	Mississippi River below Belle Chasse, La.	27	27	27	8.2	8.2	8.4	2.5	2.4	2.5

Table 30.-- Concentration data for dissolved major elements in water samples collected from the Mississippi River and some of its tributaries during February-March 1990 cruise -- Continued

Date		Sodium			Silicon (as SiO_2)		
1990	Sampling site	A	B	Grab	A	B	Grab
2-23	Cumberland River near Smithland, Ky.	3	3	2.8	5.1	5	4.7
2-24	Tennessee River near Calvert City, Ky.	3.5	3.5	3.5	5.4	5.3	5.4
2-25	Mississippi River near Cache, Ill.	23	--	27	6.5	--	7.5
2-28	Wabash River near New Haven, Ill.	8	7.8	8.6	7.2	7.1	8.1
3-01	Ohio River at Uniontown, Ky.	9.3	9.2	9.3	6.7	6.7	6.7
3-03	Ohio River at Olmsted, Ill.	6.7	7.3	8.4	6.3	6.8	7.1
3-04	Mississippi River below Hickman, Ky.	11	10	12	6.6	6.4	6.8
3-05	Mississippi River below Fulton, Tenn.	9	11	11	6.2	7.2	7.3
3-07	Mississippi River at Helena, Ark.	10	9	9.7	7	6.1	6.5
3-07	Arkansas River at Mile 1.0, Ark.	33	--	--	4	--	--
3-08	Mississippi River above Arkansas City, Ark.	12	12	13	6.6	6.7	5.7
3-08	White River at Mile 1.0, Ark.	2.1	--	--	5.7	--	--
3-10	Yazoo River at Mile 1.0, Miss.	5.1	--	--	5.7	--	--
3-10	Mississippi River below Vicksburg, Miss.	10	9.9	12	5.6	5.5	7.7
3-12	Mississippi River near St. Francisville, La.	11	11	11	5.8	5.8	5.7
3-14	Mississippi River below Belle Chasse, La.	12	12	12	5.8	5.8	6

Table 31.– Concentration data for dissolved major elements in water samples collected from the Mississippi River and some of its tributaries during the May-June 1990 cruise

[A, Composite A; B, Composite B; --, not determined; All results are in milligrams per liter]

Date		Calcium			Magnesium			Potassium		
1990	Sampling site	A	B	Grab	A	B	Grab	A	B	Grab
6-07	Illinois River at Valley City, Ill.	--	77	47	--	33	17	3.1	3.1	3.6
6-10	Missouri River at St. Charles, Mo.[1]	36	--	37	9.3	--	10	3.9	--	4.6
6-11	Mississippi River below Grafton, Ill.	50	50	51	18	18	18	3.7	3.7	3.6
6-13	Mississippi River at Thebes, Ill.	39	40	41	12	13	13	3.6	3.9	3.8
6-14	Ohio River at Olmsted, Ill.	35	34	34	8.4	8.2	8.4	2.4	2.7	2.5
6-18	Mississippi River below Memphis, Tenn.	38	38	38	11	11	11	3.6	3.5	3.3
6-19	White River at Mile 1.0, Ark.	--	--	26	--	--	9.8	--	--	1.7
6-19	Arkansas River at Mile 1.0, Ark.	--	--	29	--	--	6.1	--	--	2.5
6-20	Mississippi River below Arkansas City, Ark.	37	37	36	9.8	11	11	3.2	3.3	3.1
6-22	Yazoo River below Steele Bayou, Miss.	11	11	11	3.3	3.4	3.4	3.2	3.2	3.2
6-23	Mississippi River below Vicksburg, Miss.	35	36	35	9.9	10	9.9	3.4	3.3	3.3
6-25	Mississippi River near St. Francisville, La.	35	36	36	9.8	10	10	3.3	3.4	3.4
6-27	Mississippi River below Belle Chasse, La.	35	36	36	9.9	11	11	3.3	3.5	3.4

Table 31.– Concentration data for dissolved major elements in water samples collected from the Mississippi River and some of its tributaries during the May-June 1990 cruise -- Continued

Date		Sodium			Silicon (as SiO_2)		
1990	Sampling site	A	B	Grab	A	B	Grab
6-07	Illinois River at Valley City, Ill.	--	26	9.3	--	6.4	6.8
6-10	Missouri River at St. Charles, Mo.[1]	16	--	17	7.9	--	16
6-11	Mississippi River below Grafton, Ill.	11	11	11	6.7	6.6	6.4
6-13	Mississippi River at Thebes, Ill.	13	13	13	7.4	7.5	7.6
6-14	Ohio River at Olmsted, Ill.	7.3	7	7.1	6	5.5	5.6
6-18	Mississippi River below Memphis, Tenn.	11	11	11	6.9	6.7	6.6
6-19	White River at Mile 1.0, Ark.	--	--	2.2	--	--	7.1
6-19	Arkansas River at Mile 1.0, Ark.	--	--	15	--	--	6.2
6-20	Mississippi River below Arkansas City, Ark.	11	11	11	6.9	9.2	6.8
6-22	Yazoo River below Steele Bayou, Miss.	4.8	4.9	5	6.5	6.5	6.6
6-23	Mississippi River below Vicksburg, Miss.	10	11	10	6.7	6.7	6.7
6-25	Mississippi River near St. Francisville, La.	10	11	11	6.7	7.2	6.9
6-27	Mississippi River below Belle Chasse, La.	12	13	13	6.8	7	7

[1]Single vertical composite near centroid of flow

Table 32.-- Concentration data for dissolved chloride, sulfate, and nitrate (as nitrogen) in water samples collected from the Mississippi River and some of its tributaries during the July-August 1987 cruise

[A, Composite A; B, Composite B; --, not determined; All results are in milligrams per liter]

Date		Chloride			Sulfate			Nitrate as nitrogen		
1987	Sampling site	A	B	Grab	A	B	Grab	A	B	Grab
7-17	Illinois River below Meredosia, Ill.	--	--	--	--	--	--	--	--	--
7-18	Mississippi River near Winfield, Mo.	16	--	16	35	36	--	1.7	--	2.1
7-20	Missouri River at Hermann, Mo.	17	18	--	81	76	--	1.8	1.9	--
7-21	Mississippi River at Hartford, Ill.	20	20	--	40	40	--	2.0	1.9	--
7-22	Mississippi River at St. Louis, Mo.	20	20	--	66	67	--	1.5	1.8	--
7-23	Mississippi River at Chester, Ill.	19	19	--	65	62	--	1.9	1.6	--
7-26	Ohio River below Smithland Locks and Dam, Ill.-Ky.	20	--	--	71	--	--	1.8	--	--
7-27	Ohio River at Olmsted, Ill.	14	14	--	46	45	--	1.0	1.0	--
7-28	Mississippi River below Hickman, Ky.	18	18	--	69	69	--	1.6	1.6	--
7-28	Mississippi River above Hatchie River, Tenn.	--	--	16	--	--	55	--	--	1.4
7-28	Hatchie River at Highway 61 bridge, Tenn.	--	--	6.4	--	--	4.2	--	--	0.7
7-30	Mississippi River at Helena, Ark.	16	15	--	53	50	--	1.4	1.4	--
7-31	White River at Mile 11.5, Ark.	6.2	6.2	--	7.5	7.3	--	0.3	0.3	--
8-01	Arkansas River at Mile 55.9, Ark.	132	133	--	90	92	--	0.6	0.4	--
8-02	Mississippi River above Arkansas City, Ark.	30	30	--	61	62	--	1.6	1.8	--
8-04	Yazoo River at Highway 61, Miss.	--	--	7.5	--	--	1.0	--	--	--
8-04	Mississippi River below Vicksburg, Miss.	28	27	--	59	57	--	1.5	1.4	--
8-06	Old River Outflow Channel near Knox Landing, La.	27	27	--	56	56	--	1.3	1.4	--
8-07	Mississippi River near St. Francisville, La.	26	27	--	55	56		1.5	1.3	--
8-08	Mississippi River at Plaquemine, La.	--	--	25	--	--	51	--	--	1.2
8-08	Mississippi River at Union, La.	--	--	28	--	--	51	--	--	1.2
8-08	Mississippi River at Luling Bridge, La.	--	--	25	--	--	51	--	--	1.3
8-09	Mississippi River below Belle Chasse, La.		--	42	--	--	58	1.4	--	--

Table 33.-- Concentration data for dissolved chloride, sulfate, and nitrate (as nitrogen) in water samples collected from the Mississippi River and some of its tributaries during the November-December 1987 cruise

[A, Composite A; B, Composite B; --, not determined; All results are in milligrams per liter]

Date		Chloride			Sulfate			Nitrate as nitrogen		
1987	Sampling site	A	B	Grab	A	B	Grab	A	B	Grab
11-29	Illinois River below Meredosia, Ill.	58	--	--	80	--	--	3.2	--	--
11-30	Mississippi River near Winfield, Mo.	18	18	--	29	29	--	1.6	1.5	--
12-02	Missouri River at St. Charles, Mo.	16	15	--	126	126	--	1.2	1.1	--
12-03	Mississippi River at St. Louis, Mo.	19	18	--	76	71	--	1.5	1.4	--
12-05	Mississippi River at Thebes, Ill.	19	20	--	78	79	--	1.5	1.5	--
12-06	Ohio River at Olmsted, Ill.	25	26	--	70	71	--	1.3	1.3	--
12-07	Mississippi River below Hickman, Ky.	22	22	--	71	71	--	1.4	1.4	--
12-08	Mississippi River at Fulton, Tenn.	21	21	--	70	70	--	1.3	1.3	--
12-11	Mississippi River at Helena, Ark.	21	21	--	69	67	--	1.4	1.3	--
12-12	White River at Mile 11.5, Ark.	6.1	7.3	--	8.1	8.2	--	0.4	0.4	--
12-13	Mississippi River above Arkansas City, Ark.	26	27	--	61	61	--	1.3	1.2	--
12-14	Yazoo River at Mile 10, Miss.			--			--	0.5	0.5	--
12-15	Mississippi River below Vicksburg, Miss.	27	26	--	62	59	--	1.2	1.2	--
12-17	Old River Outflow Channel near Knox Landing, La.			--			--	1.2	1.2	--
12-18	Mississippi River near St. Francisville, La.	27	27	--	62	63	--	1.3	1.3	--
12-20	Mississippi River below Belle Chasse, La.	40	40	--	61	61	--	1.3	1.3	--

Table 34.-- Concentration data for dissolved chloride, sulfate, and nitrate (as nitrogen) in water samples collected from the Mississippi River and some of its tributaries during the May-June 1988 cruise

[A, Composite A; B, Composite B; --, not determined; <, less than the detection limit; All results are in milligrams per liter]

Date		Chloride			Sulfate			Nitrate as nitrogen		
1988	Sampling site	A	B	Grab	A	B	Grab	A	B	Grab
5-16	Illinois River below Meredosia, Ill.	58	56	58	85	85	87	3.4	3.3	3.2
5-17	Mississippi River near Winfield, Mo.	18	17	17	37	36	37	1.3	1.2	1.3
5-19	Missouri River at Hermann, Mo.	19	19	--	143	152	--	0.9	0.9	--
5-20	Mississippi River at St. Louis, Mo.	22	22	--	89	89	--	1.3	1.2	--
5-22	Mississippi River at Thebes, Ill.	22	22	--	90	91	--	1.3	1.4	--
5-23	Ohio River at Olmsted, Ill.	18	12	--	59	40	--	0.8	0.6	--
5-24	Mississippi River below Hickman, Ky.	20	20	20	76	76	80	1.2	1.2	1.1
5-26	Mississippi River at Fulton, Tenn.	19	19	14	73	72	48	1.0	0.9	0.8
5-28	Mississippi River at Helena, Ark.	17	19	22	59	68	81	0.9	1.0	1.2
5-29	White River at Mile 11.5, Ark.	6.2	6.8	5.7	7.4	7.2	7.3	<0.009	<0.009	<0.009
5-29	Arkansas River at Mile 1.0, Ark.	--	--	90	--	--	58	--	--	0.4
5-30	Mississippi River above Arkansas City, Ark.	19	20	16	66	67	58	1.0	1.0	0.8
6-01	Yazoo River at Mile 10, Miss.	7.1	--	7.1	9.2	--	9.4	<0.009	--	<0.009
6-02	Mississippi River below Vicksburg, Miss.	20	19	19	65	64	65	0.9	0.9	0.8
6-04	Old River Outflow Channel near Knox Landing, La.	19	19	21	65	65	69	0.9	0.9	0.9
6-05	Mississippi River near St. Francisville, La.	12	13	21	39	30	57	0.6	0.6	0.8
6-07	Mississippi River below Belle Chasse, La.	32	31	--	64	62	--	1.0	1.0	--

Table 35.-- Concentration data for dissolved chloride and sulfate in water samples collected from the Mississippi River and some of its tributaries during the March-April 1989 cruise

[A, Composite A; B, Composite B; --, not determined; All results are in milligrams per liter]

Date		Chloride			Sulfate		
1989	Sampling site	A	B	Grab	A	B	Grab
3-09	Illinois River at Hardin, Ill.	109	104	105	109	101	109
3-10	Mississippi River near Winfield, Mo.	24.4	--	25	30.6	--	31.0
3-12	Missouri River at Hermann, Mo.	16.9	16.7	15.5	78.2	72.5	66.4
3-13	Mississippi River at St. Louis, Mo.	41.4	40.7	--	58.4	61.7	--
3-15	Mississippi River at Thebes, Ill.	34	33.2	33.8	61	58.5	60.0
3-16	Ohio River at Olmsted, Ill.	9.5	10.0	8.8	36.1	37.8	35.2
3-17	Mississippi River below Hickman, Ky.	14.1	14.5	--	39.9	40.8	--
3-19	Mississippi River below Fulton, Tenn.	14.3	14.2	15.0	41.2	40.3	42.3
3-21	Mississippi River at Helena, Ark.	14.3	14.3	13.0	39.7	39.4	36.7
3-22	White River at Mile 11.5, Ark.	3.1	4.1	3.0	5.3	5.7	5.3
3-23	Arkansas River at Pendleton, Ark.	42.2	41.6	44.3	31.0	31.5	32.6
3-24	Mississippi River above Arkansas City, Ark.	15.7	16.3	16.6	37.2	38.2	36.6
3-26	Yazoo River below Steele Bayou, Miss.	2.1	2.1	3.8	5.1	5.2	5.8
3-27	Mississippi River below Vicksburg, Miss.	15.7	16.0	15.8	37.9	38.4	37.9
3-29	Old River Outflow Channel near Knox Landing, La.	15.5	15.5	15.1	37.0	37.0	36.3
3-30	Mississippi River near St. Francisville, La.	15.6	14.6	14.9	37.2	35.6	36.3
4-01	Mississippi River below Belle Chasse, La.	17.3	16.6	17.8	35.9	34.4	36.9

Table 36.-- Concentration data for dissolved chloride and sulfate in water samples collected from the Mississippi River and some of its tributaries during the June 1989 cruise

[A, Composite A; B, Composite B; --, not determined; All results are in milligrams per liter]

Date		Chloride			Sulfate		
1989	Sampling site	A	B	Grab	A	B	Grab
6-04	Illinois River at Hardin, Ill.	--	--	--	--	--	--
6-05	Mississippi River near Winfield, Mo.	--	--	--	--	--	--
6-07	Missouri River at Hermann, Mo.	--	--	--	--	--	--
6-08	Mississippi River at St. Louis, Mo.	25.4	24.8	--	82.3	82.5	20.4
6-10	Mississippi River at Thebes, Ill.	25.3	25.9	26.2	79.2	82.8	80.3
6-11	Ohio River at Olmsted, Ill.	12.3	12.6	15.8	46.4	46.6	52.8
6-12	Mississippi River below Hickman, Ky.	15.8	17.2	15.5	54.5	54.5	52.8
6-14	Mississippi River at Fulton, Tenn.	15.9	15.9	16.6	53.2	53.2	52.2
6-17	Mississippi River at Helena, Ark.	14.7	14.5	14.0	46.9	46.4	48.7
6-18	White River at Mile 11.5, Ark.	4.0	4.0	--	5.1	5.1	--
6-19	Arkansas River at Pendleton, Ark.	103	--	--	45.5	--	--
6-20	Mississippi River above Arkansas City, Ark.	29.3	28.6	--	39.2	41.4	--
6-22	Yazoo River below Steele Bayou, Miss.	4.0	--	2.7	4.4	--	4.0
6-23	Mississippi River below Vicksburg, Miss.	23.1	26.2	25.4	33.9	38.4	38.7
6-25	Old River Outflow Channel near Knox Landing, La.	25.4	25.7	25.2	38.7	37.8	36.8
6-26	Mississippi River near St. Francisville, La.	23.4	23.4	24.2	35.7	35.9	36.6
6-28	Mississippi River below Belle Chasse, La.	29.7	29.2	30.0	36.1	38.8	38.7

Table 37.-- Concentration data for dissolved chloride, sulfate, and nitrate (as nitrogen) in water samples collected from the Mississippi River and some of its tributaries during the February-March 1990 cruise

[A, Composite A; B, Composite B; --, not determined; <, less than the detection limit; All results are in milligrams per liter]

Date		Chloride			Sulfate			Nitrate as nitrogen		
1990	Sampling site	A	B	Grab	A	B	Grab	A	B	Grab
2-23	Cumberland River near Smithland, Ky.	3.3	4.0	--	17.2	17.9	--	0.8	1.0	--
2-24	Tennessee River near Calvert City, Ky.	4.2	4.3	4.3	9.8	9.6	9.6	0.6	0.6	0.6
2-25	Mississippi River near Cache, Ill.	31.7	--	32.5	63.2	--	62.9	2.7	--	2.3
2-28	Wabash River near New Haven, Ill.	18.3	17.6	16.5	43.1	41.5	40.0	4.4	4.6	4.4
3-01	Ohio River at Uniontown, Ky.	13.5	12.5	12.5	44.8	49.6	49.9	2.2	1.8	1.9
3-03	Ohio River at Olmsted, Ill.	10.3	10.3	12.6	36.4	35.4	45.2	1.9	1.9	2.3
3-04	Mississippi River below Hickman, Ky.	--	--	--	--	--	--	--	--	--
3-05	Mississippi River below Fulton, Tenn.	--	12.8	13.1	--	37.4	37.7	1.8	1.9	1.9
3-07	Mississippi River at Helena, Ark.	13.3	--	13.4	37.6	--	38.0	1.9	--	1.8
3-07	Arkansas River at Mile 1.0, Ark.	--	--	54.6	--	--	31.0	--	--	0.1
3-08	Mississippi River above Arkansas City, Ark.	--	18.9	18.8	--	32.8	32.2	--	1.6	1.2
3-08	White River at Mile 1.0, Ark.	--	--	2.7	--	--	4.8	--	--	0.1
3-10	Yazoo River at Mile 1.0, Miss.	--	--	4.0	--	--	7.3	--	--	<0.01
3-10	Mississippi River below Vicksburg, Miss.	16.0	--	16.1	31.9	--	32.2	1.3	--	1.3
3-12	Mississippi River near St. Francisville, La.	15.2	15.3	13.2	31.1	31.1	26.7	1.0	0.7	1.1
3-14	Mississippi River below Belle Chasse, La.	17.8	17.6	18.5	31.5	31.1	30.8	1.3	1.1	1.3

Table 38.-- Concentration data for dissolved chloride, sulfate, and nitrate (as nitrogen) in water samples collected from the Mississippi River and some of its tributaries during the May-June 1990 cruise

[A, Composite A; B, Composite B; --, not determined; All results are in milligrams per liter]

Date		Chloride			Sulfate			Nitrate as nitrogen		
1990	Sampling site	A	B	Grab	A	B	Grab	A	B	Grab
6-07	Illinois River at Valley City, Ill.	46.0	43.7	46.1	75.8	73.8	75.1	8.4	8.2	8.3
6-10	Missouri River at St. Charles, Mo.[1]	7.4	--	8.6	47.2	--	44.8	1.4	--	1.4
6-11	Mississippi River below Grafton, Ill.	20.3	19.6	20.5	36.1	34.7	35.2	5.7	5.7	5.9
6-13	Mississippi River at Thebes, Ill.	11.7	12.0	13.6	38.8	38.8	39.1	2.8	2.9	3.2
6-14	Ohio River at Olmsted, Ill.	8.4	8.4	8.7	28.4	32.1	33.3	1.5	1.5	1.7
6-18	Mississippi River below Memphis, Tenn.	11.3	11.1	11.5	38.2	36.6	37.3	2.2	2.2	2.1
6-19	White River at Mile 1.0, Ark.	--	--	2.4	--	--	4.1	--	--	0.29
6-19	Arkansas River at Mile 1.0, Ark.	--	--	17.4	--	--	21.6	--	--	0.63
6-20	Mississippi River below Arkansas City, Ark.	11.2	11.3	11.6	33.5	33.5	32.2	1.9	1.9	1.8
6-22	Yazoo River below Steele Bayou, Miss.	3.3	3.3	3.3	6.4	6.4	6.4	0.5	0.6	0.5
6-23	Mississippi River below Vicksburg, Miss.	11.4	11.1	11.1	31.7	32.0	31.0	1.8	1.7	1.7
6-25	Mississippi River near St. Francisville, La.	10.2	11.3	11.1	31.5	32.1	32.1	1.7	1.7	1.8
6-27	Mississippi River below Belle Chasse, La.	14.9	10.2	14.7	32.9	32.3	32.7	1.7	1.7	2.0

[1]Single vertical composite near centroid of flow

Table 39.-- Concentration data for dissolved bicarbonate and carbonate in water samples collected from the Mississippi River and some of its tributaries during the July-August 1987 cruise

[A, Composite A; B, Composite B; --, not determined; <, less than the detection limit; All results are in milligrams per liter]

Date		Bicarbonate			Carbonate		
1987	Sampling site	A	B	Grab	A	B	Grab
7-17	Illinois River below Meredosia, Ill.	--	--	--	--	--	--
7-18	Mississippi River near Winfield, Mo.	181	--	178	0.90	--	<0.50
7-20	Missouri River at Hermann, Mo.	138	143	--	<0.05	<0.05	--
7-21	Mississippi River at Hartford, Ill.	175	175	--	0.87	0.87	--
7-22	Mississippi River at St. Louis, Mo.	155	154	--	0.77	0.76	--
7-23	Mississippi River at Chester, Ill.	154	155	--	0.76	0.77	--
7-26	Ohio River below Smithland Locks and Dam, Ill.-Ky.	124	--	--	0.61	--	--
7-27	Ohio River at Olmsted, Ill.	95	95	--	<0.05	<0.05	--
7-28	Mississippi River below Hickman, Ky.	147	147	--	0.73	0.73	--
7-28	Mississippi River above Hatchie River, Tenn.	--	--	133	--	--	0.66
7-28	Hatchie River at Highway 61 bridge, Tenn.	--	--	23	--	--	<0.50
7-30	Mississippi River at Helena, Ark.	136	136	--	0.68	0.68	--
7-31	White River at Mile 11.5, Ark.	164	166		0.82	0.82	--
8-01	Arkansas River at Mile 55.9, Ark.	145	145	--	0.72	0.72	--
8-02	Mississippi River above Arkansas City, Ark.	147	146	--	0.73	0.73	--
8-04	Yazoo River at Highway 61, Miss.	--	--	131	--	--	0.65
8-04	Mississippi River below Vicksburg, Miss.	149	148	--	0.74	0.74	--
8-06	Old River Outflow Channel near Knox Landing, La.	150	151	--	0.74	0.75	--
8-07	Mississippi River near St. Francisville, La.	151	151	--	0.75	0.75	--
8-08	Mississippi River at Plaquemine, La.	--	--	148	--	--	0.74
8-08	Mississippi River at Union, La.	--	--	145	--	--	0.72
8-08	Mississippi River at Luling Bridge, La.	--	--	142	--	--	0.70
8-09	Mississippi River below Belle Chasse, La.	140	--	--	0.70	--	--

Table 40.-- Concentration data for dissolved bicarbonate and carbonate in water samples collected from the Mississippi River and some of its tributaries during November-December 1987 cruise

[A, Composite A; B, Composite B; --, not determined; <, less than the detection limit; All results are in milligrams per liter]

Date		Bicarbonate			Carbonate		
1987	Sampling site	A	B	Grab	A	B	Grab
11-29	Illinois River below Meredosia, Ill.	250	--	--	1.2	--	--
11-30	Mississippi River near Winfield, Mo.	196	196	--	2.0	2.0	--
12-02	Missouri River at St. Charles, Mo.	188	190	--	1.9	0.94	--
12-03	Mississippi River at St. Louis, Mo.	194	194	--	0.96	0.96	--
12-05	Mississippi River at Thebes, Ill.	193	193	--	0.96	0.96	--
12-06	Ohio River at Olmsted, Ill.	97	97	--	<0.50	<0.50	--
12-07	Mississippi River below Hickman, Ky.	147	147	--	0.73	0.73	--
12-08	Mississippi River at Fulton, Tenn.	146	146	--	--	--	--
12-11	Mississippi River at Helena, Ark.	145	142	--	<0.50	<0.50	--
12-12	White River at Mile 11.5, Ark.	108	108	--	<0.50	<0.50	--
12-13	Mississippi River above Arkansas City, Ark.	136	139	--	<0.50	<0.50	--
12-14	Yazoo River at Mile 10, Miss.	35	35	--	<0.50	<0.50	--
12-15	Mississippi River below Vicksburg, Miss.	137	137	--	<0.50	<0.50	--
12-17	Old River Outflow Channel near Knox Landing, La.	134	135	--	<0.50	<0.50	--
12-18	Mississippi River near St. Francisville, La.	134	134	--	<0.50	<0.50	--
12-20	Mississippi River below Belle Chasse, La.	132	134	--	<0.50	<0.50	--

Table 41.-- Concentration data for dissolved bicarbonate and carbonate in water samples collected from the Mississippi River and some of its tributaries during May-June 1988 cruise

[A, Composite A; B, Composite B; --, not determined; <, less than the detection limit; All results are in milligrams per liter]

Date		Bicarbonate			Carbonate		
1988	Sampling site	A	B	Grab	A	B	Grab
5-16	Illinois River below Meredosia, Ill.	237	239	239	2.4	1.2	1.2
5-17	Mississippi River near Winfield, Mo.	166	166	166	0.82	0.82	0.82
5-19	Missouri River at Hermann, Mo.	178	165	--	0.89	0.82	--
5-20	Mississippi River at St. Louis, Mo.	190	172	--	0.94	0.86	--
5-22	Mississippi River at Thebes, Ill.	159	190	--	0.79	0.95	--
5-23	Ohio River at Olmsted, Ill.	97	69	--	<0.50	<0.50	--
5-24	Mississippi River below Hickman, Ky.	147	148	171	0.73	0.73	0.85
5-26	Mississippi River at Fulton, Tenn.	149	121	149	0.74	0.60	0.74
5-28	Mississippi River at Helena, Ark.	138	127	151	0.68	0.63	0.75
5-29	White River at Mile 11.5, Ark.	159	159	160	0.79	0.79	0.79
5-29	Arkansas River at Mile 1.0, Ark.	--	--	155	--	--	0.77
5-30	Mississippi River above Arkansas City, Ark.	153	148	108	0.76	<0.50	0.54
6-01	Yazoo River at Mile 10, Miss.	123	--	123	<0.50	--	<0.50
6-02	Mississippi River below Vicksburg, Miss.	117	119	105	0.58	0.59	0.52
6-04	Old River Outflow Channel near Knox Landing, La.	157	158	156	0.78	0.78	0.78
6-05	Mississippi River near St. Francisville, La.	94	107	108	0.47	<0.50	0.53
6-07	Mississippi River below Belle Chasse, La.	164	117	--	<0.50	0.58	--

Table 42.-- Concentration data for dissolved bicarbonate and carbonate in water samples collected from the Mississippi River and some of its tributaries during March-April 1989 cruise

[A, Composite A; B, Composite B; --, not determined; <, less than the detection limit; All results are in milligrams per liter]

Date		Bicarbonate			Carbonate		
1989	Sampling site	A	B	Grab	A	B	Grab
3-09	Illinois River at Hardin, Ill.	--	--	--	--	--	--
3-10	Mississippi River near Winfield, Mo.	--	--	--	--	--	--
3-12	Missouri River at Hermann, Mo.	133	139	--	0.66	0.69	--
3-13	Mississippi River at St. Louis, Mo.	137	146	--	<0.5	<0.5	--
3-15	Mississippi River at Thebes, Ill.	131	142	161	<0.5	<0.5	<0.5
3-16	Ohio River at Olmsted, Ill.	63.4	64.7	66.0	<0.5	<0.5	<0.5
3-17	Mississippi River below Hickman, Ky.	83.7	84.9	81.6	<0.5	<0.5	<0.5
3-19	Mississippi River below Fulton, Tenn.	86.3	86.2	86.0	<0.5	<0.5	<0.5
3-21	Mississippi River at Helena, Ark.	88.7	87.4	83.8	<0.5	<0.5	<0.5
3-22	White River at Mile 11.5, Ark.	80.0	81.7	80.7	<0.5	<0.5	<0.5
3-23	Arkansas River at Pendleton, Ark.	70.2	74.3	71.9	<0.5	<0.5	<0.5
3-24	Mississippi River above Arkansas City, Ark.	96.5	98.1	96.8	<0.5	<0.5	<0.5
3-26	Yazoo River below Steele Bayou, Miss.	28.1	27.1	32.2	<0.5	<0.5	<0.5
3-27	Mississippi River below Vicksburg, Miss.	97.0	98.9	99.6	<0.5	<0.5	<0.5
3-29	Old River Outflow Channel near Knox Landing, La.	96.5	96.4	96.2	<0.5	<0.5	<0.5
3-30	Mississippi River near St. Francisville, La.	95.5	95.3	94.9	<0.5	<0.5	<0.5
4-01	Mississippi River below Belle Chasse, La.	93.4	94.1	95.5	<0.5	<0.5	<0.5

Table 43.-- Concentration data for dissolved bicarbonate and carbonate in water samples collected from the Mississippi River and some of its tributaries during June 1989 cruise

[A, Composite A; B, Composite B; --, not determined; <, less than the detection limit; All results are in milligrams per liter]

Date		Bicarbonate			Carbonate		
1989	Sampling site	A	B	Grab	A	B	Grab
6-04	Illinois River at Hardin, Ill.	--	--	--	--	--	--
6-05	Mississippi River near Winfield, Mo.	--	--	--	--	--	--
6-07	Missouri River at Hermann, Mo.	--	103	133	--	<0.5	<0.5
6-08	Mississippi River at St. Louis, Mo.	145	150	66.5	0.72	<0.5	0.67
6-10	Mississippi River at Thebes, Ill.	--	164	--	--	<0.5	--
6-11	Ohio River at Olmsted, Ill.	88.9	75.9	56.7	<0.5	<0.5	<0.5
6-12	Mississippi River below Hickman, Ky.	104	115	105	<0.5	<0.5	<0.5
6-14	Mississippi River at Fulton, Tenn.	124	124	126	<0.5	<0.5	0.63
6-17	Mississippi River at Helena, Ark.	117	119	118	<0.5	0.59	<0.5
6-18	White River at Mile 11.5, Ark.	--	--	133	--	--	0.66
6-19	Arkansas River at Pendleton, Ark.	87.9	--	--	<0.5	--	--
6-20	Mississippi River above Arkansas City, Ark.	107	107	107	<0.5	<0.5	<0.5
6-22	Yazoo River below Steele Bayou, Miss.	20.9	20.7	21.8	<0.5	<0.5	<0.5
6-23	Mississippi River below Vicksburg, Miss.	100	103	--	<0.5	0.51	--
6-25	Old River Outflow Channel near Knox Landing, La.	101	102	101	<0.5	<0.5	<0.5
6-26	Mississippi River near St. Francisville, La.	100	99.1	99.4	0.50	<0.5	<0.5
6-28	Mississippi River below Belle Chasse, La.	103	--	102	0.51	--	<0.5

Table 44.– Concentration data for dissolved bicarbonate and carbonate in water samples collected from the Mississippi River and some of its tributaries during the February-March 1990 cruise

[A, Composite A; B, Composite B; –, not determined; <, less than the detection limit; All results are in milligrams per liter]

Date		Bicarbonate			Carbonate		
1990	Sampling site	A	B	Grab	A	B	Grab
2-23	Cumberland River near Smithland, Ky.	96.5	93.7	96.8	<0.5	<0.5	<0.5
2-24	Tennessee River near Calvert City, Ky.	55.5	55.4	55.8	<0.5	<0.5	<0.5
2-25	Mississippi River near Cache, Ill.	174	–	177	0.87	–	0.88
2-28	Wabash River near New Haven, Ill.	147	148	150	<0.5	0.74	0.75
3-01	Ohio River at Uniontown, Ky.	–	77.2	76.9	–	<0.5	<0.5
3-03	Ohio River at Olmsted, Ill.	83.3	85.8	94.8	<0.5	<0.5	<0.5
3-04	Mississippi River below Hickman, Ky.	–	–	–	–	–	–
3-05	Mississippi River below Fulton, Tenn.	24.5	94.1	98.6	<0.5	<0.5	<0.5
3-07	Mississippi River at Helena, Ark.	99.0	–	99.2	<0.5	–	<0.5
3-07	Arkansas River at Mile 1.0, Ark.	–	–	85.0	<0.5	–	–
3-08	Mississippi River above Arkansas City, Ark.	–	91.6	92.9	–	<0.5	<0.5
3-08	White River at Mile 1.0, Ark.	–	–	55.1	0.55	–	–
3-10	Yazoo River at Mile 1.0, Miss.	–	–	32.2	<0.5	–	–
3-10	Mississippi River below Vicksburg, Miss.	91.0	–	93.5	<0.5	–	<0.5
3-12	Mississippi River near St. Francisville, La.	90.3	91.0	67.7	<0.5	<0.5	<0.5
3-14	Mississippi River below Belle Chasse, La.	88.9	90.2	87.0	<0.5	<0.5	<0.5

Table 45.– Concentration data for dissolved bicarbonate and carbonate in water samples collected from the Mississippi River and some of its tributaries during the May-June 1990 cruise

[A, Composite A; B, Composite B; –, not determined; <, less than the detection limit; All results are in milligrams per liter]

Date		Bicarbonate			Carbonate		
1990	Sampling site	A	B	Grab	A	B	Grab
6-07	Illinois River at Valley City, Ill.	248	249	250	1.2	1.2	1.2
6-10	Missouri River at St. Charles, Mo.[1]	120	–	115	0.59	–	0.57
6-11	Mississippi River below Grafton, Ill.	164	161	160	0.82	0.80	<0.5
6-13	Mississippi River at Thebes, Ill.	129	130	130	0.64	0.65	0.64
6-14	Ohio River at Olmsted, Ill.	98.3	97.7	101	<0.5	<0.5	0.50
6-18	Mississippi River below Memphis, Tenn.	120	120	120	0.60	0.59	0.60
6-19	White River at Mile 1.0, Ark.	–	–	121	–	–	0.60
6-19	Arkansas River at Mile 1.0, Ark.	–	–	92.4	–	–	<0.5
6-20	Mississippi River below Arkansas City, Ark.	117	117	117	0.58	0.58	0.58
6-22	Yazoo River below Steele Bayou, Miss.	45.2	46.7	45.9	<0.5	<0.5	<0.5
6-23	Mississippi River below Vicksburg, Miss.	117	116	115	0.58	0.58	0.57
6-25	Mississippi River near St. Francisville, La.	115	116	116	0.57	0.58	0.58
6-27	Mississippi River below Belle Chasse, La.	115	115	115	0.57	0.57	0.57

[1]Single vertical composite near centroid of flow

Table 46.-- Discharge and corresponding transport data for dissolved trace elements in water samples collected from the Mississippi River and some of its tributaries during the July-August 1987 cruise

[*, concentration less than the detection limit; All results are in kilograms per day except discharge, which is in cubic meters per second]

Date 1987	Sampling site	Discharge	Aluminum	Arsenic	Barium	Beryllium	Boron	Cadmium
7-17	Illinois River below Meredosia, Ill.	312	2,350	135	1,600	*	4,560	5.6
7-18	Mississippi River near Winfield, Mo.	1,370	1,780	393	8,460	*	5,740	689
7-20	Missouri River at Hermann, Mo.	2,640	3,950	655	28,900	*	12,100	56
7-21	Mississippi River at Hartford, Ill.	1,500	4,090	395	9,130	*	7,230	58
7-22	Mississippi River at St. Louis, Mo.	3,940	8,590	932	36,300	*	15,300	57
7-23	Mississippi River at Chester, Ill.	4,250	12,200	1,010	39,000	*	16,000	64
7-26	Ohio River below Smithland Locks and Dam, Ill.-Ky.	652	495	74	3,010	*	3,820	*
7-27	Ohio River at Olmsted, Ill.	2,070	1,740	236	6,910	*	8,120	*
7-28	Mississippi River below Hickman, Ky.	6,270	5,410	1,790	52,500	27	51,000	186
7-30	Mississippi River at Helena, Ark.	6,850	6,440	1,210	45,200	*	33,100	321
7-31	White River at Mile 11.5, Ark.	332	222	30	1,160	2.8	393	8.2
8-01	Arkansas River at Mile 55.9, Ark.	790	410	431	8,000	14	5,940	39
8-02	Mississippi River above Arkansas City, Ark.	7,630	2,650	1,940	51,800	125	42,600	627
8-04	Mississippi River below Vicksburg, Miss.	7,750	3,210	1,560	56,000	*	33,500	325
8-06	Old River Outflow Channel near Knox Landing, La.	2,050	357	441	13,000	33	10,700	231
8-07	Mississippi River near St. Francisville, La.	6,190	2,970	1,150	39,800	*	25,300	331

Table 46.-- Discharge and corresponding transport data for dissolved trace elements in water samples collected from the Mississippi River and some of its tributaries during the July-August 1987 cruise -- Continued

Date 1987	Sampling site	Chromium	Cobalt	Copper	Iron	Lead	Lithium	Manganese
7-17	Illinois River below Meredosia, Ill.	28	*	*	3,020	20	204	243
7-18	Mississippi River near Winfield, Mo.	136	2.6	338	2,140	132	936	54
7-20	Missouri River at Hermann, Mo.	329	*	895	26,600	178	4,200	38
7-21	Mississippi River at Hartford, Ill.	136	*	371	*	102	871	111
7-22	Mississippi River at St. Louis, Mo.	314	*	766	*	186	4,250	169
7-23	Mississippi River at Chester, Ill.	333	*	852	5,600	241	4,280	195
7-26	Ohio River below Smithland Locks and Dam, Ill.-Ky.	17	*	99	--	17	262	20
7-27	Ohio River at Olmsted, Ill.	74	*	554	*	50	577	*
7-28	Mississippi River below Hickman, Ky.	663	44	2,080	*	4,670	7,400	*
7-30	Mississippi River at Helena, Ark.	218	*	1,180	3,460	2,670	4,870	*
7-31	White River at Mile 11.5, Ark.	15	4.1	36	*	8	18	*
8-01	Arkansas River at Mile 55.9, Ark.	220	28	279	*	25	658	67
8-02	Mississippi River above Arkansas City, Ark.	668	156	2,220	*	321	6,900	644
8-04	Mississippi River below Vicksburg, Miss.	400	*	1,390	*	342	5,550	*
8-06	Old River Outflow Channel near Knox Landing, La.	133	43	560	*	92	1,640	143
8-07	Mississippi River near St. Francisville, La.	*	*	1,230	*	127	4,630	318

Table 46.-- Discharge and corresponding transport data for dissolved trace elements in water samples collected from the Mississippi River and some of its tributaries during the July-August 1987 cruise -- Continued

Date 1987	Sampling site	Molybdenum	Nickel	Strontium	Thallium	Uranium	Vanadium	Zinc
7-17	Illinois River below Meredosia, Ill.	213	*	5,600	11	*	214	*
7-18	Mississippi River near Winfield, Mo.	267	66	14,300	19	237	387	1,570
7-20	Missouri River at Hermann, Mo.	702	*	61,200	40	503	549	786
7-21	Mississippi River at Hartford, Ill.	373	*	16,800	24	214	329	295
7-22	Mississippi River at St. Louis, Mo.	1,080	*	76,400	66	725	623	331
7-23	Mississippi River at Chester, Ill.	1,100	*	79,000	74	770	689	560
7-26	Ohio River below Smithland Locks and Dam, Ill.-Ky.	188	24	--	*	25	32	120
7-27	Ohio River at Olmsted, Ill.	459	*	30,500	*	40	130	282
7-28	Mississippi River below Hickman, Ky.	2,190	3,300	120,000	260	1,470	*	981
7-30	Mississippi River at Helena, Ark.	1,590	*	120,000	*	715	1,260	1,650
7-31	White River at Mile 11.5, Ark.	38	*	1,220	*	22	*	20
8-01	Arkansas River at Mile 55.9, Ark.	133	53	31,800	*	144	1,010	122
8-02	Mississippi River above Arkansas City, Ark.	2,060	*	153,000	*	1,260	*	639
8-04	Mississippi River below Vicksburg, Miss.	1,580	*	156,000	*	956	1,460	2,110
8-06	Old River Outflow Channel near Knox Landing, La.	535	163	40,100	*	*	*	873
8-07	Mississippi River near St. Francisville, La.	1,860	*	124,000	78	*	*	2,200

Table 47.-- Discharge and corresponding transport data for dissolved trace elements in water samples collected from the Mississippi River and some of its tributaries during the November-December 1987 cruise

[*, concentration less than the detection limit; All results are in kilograms per day except discharge, which is in cubic meters per second]

Date 1987	Sampling site	Discharge	Aluminum	Arsenic	Barium	Beryllium	Boron	Cadmium
11-29	Illinois River below Meredosia, Ill.	262	152	62	1,050	*	3,120	2.5
11-30	Mississippi River near Winfield, Mo.	2,040	1,330	211	8,070	*	5,180	*
12-02	Missouri River at St. Charles, Mo.	2,810	1,190	411	24,600	*	17,300	*
12-03	Mississippi River at St. Louis, Mo.	5,440	4,700	787	34,600	*	28,600	*
12-05	Mississippi River at Thebes, Ill.	5,190	12,100	749	35,200	*	23,200	*
12-06	Ohio River at Olmsted, Ill.	4,200	14,000	460	14,800	*	18,900	*
12-07	Mississippi River below Hickman, Ky.	8,820	5,510	914	47,200	*	44,600	*
12-08	Mississippi River at Fulton, Tenn.	9,470	2,390	1,110	54,300	*	48,300	*
12-11	Mississippi River at Helena, Ark.	8,770	10,800	669	50,300	*	42,700	*
12-12	White River at Mile 11.5, Ark.	519	532	*	1,800	*	369	*
12-13	Mississippi River above Arkansas City, Ark.	9,920	*	1,460	61,100	*	42,900	*
12-14	Yazoo River at Mile 10, Miss.	177	662	16	466	1.0	270	9.7
12-15	Mississippi River below Vicksburg, Miss.	10,410	52,200	1,170	64,400	*	47,500	110
12-17	Old River Outflow Channel near Knox Landing, La.	1,830	835	221	11,500	*	8,370	*
12-18	Mississippi River near St. Francisville, La.	8,180	8,060	992	51,100	*	36,400	*
12-20	Mississippi River below Belle Chasse, La.	9,560	15,700	1,260	60,200	*	41,400	*

Table 47.-- Discharge and corresponding transport data for dissolved trace elements in water samples collected from the Mississippi River and some of its tributaries during the November-December 1987 cruise -- Continued

Date 1987	Sampling site	Chromium	Cobalt	Copper	Iron	Lead	Lithium	Manganese
11-29	Illinois River below Meredosia, Ill.	12	*	42	138	6.7	157	9.3
11-30	Mississippi River near Winfield, Mo.	67	*	118	1,730	18	722	285
12-02	Missouri River at St. Charles, Mo.	*	*	265	*	*	6,010	181
12-03	Mississippi River at St. Louis, Mo.	346	*	593	5,380	43	6,970	249
12-05	Mississippi River at Thebes, Ill.	184	*	483	6,570	105	6,520	718
12-06	Ohio River at Olmsted, Ill.	222	*	562	14,300	47	2,180	2,260
12-07	Mississippi River below Hickman, Ky.	367	*	798	*	*	6,940	555
12-08	Mississippi River at Fulton, Tenn.	308	*	827	*	87	8,130	125
12-11	Mississippi River at Helena, Ark.	*	*	455	8,680	*	7,270	863
12-12	White River at Mile 11.5, Ark.	*	*	26	572	13	14	50
12-13	Mississippi River above Arkansas City, Ark.	6,940	*	855	*	*	7,310	*
12-14	Yazoo River at Mile 10, Miss.	8.1	0.4	24	1,210	3.5	12	483
12-15	Mississippi River below Vicksburg, Miss.	697	*	1,380	54,500	187	6,950	2,930
12-17	Old River Outflow Channel near Knox Landing, La.	104	*	256	*	26	1,260	178
12-18	Mississippi River near St. Francisville, La.	412	*	1,060	*	57	5,750	298
12-20	Mississippi River below Belle Chasse, La.	513	*	1,370	9,140	208	7,040	332

Table 47.-- Discharge and corresponding transport data for dissolved trace elements in water samples collected from the Mississippi River and some of its tributaries during the November-December 1987 cruise -- Continued

Date 1987	Sampling site	Molybdenum	Nickel	Strontium	Thallium	Uranium	Vanadium	Zinc
11-29	Illinois River below Meredosia, Ill.	107	172	5,960	*	20	2.6	111
11-30	Mississippi River near Winfield, Mo.	177	421	16,500	*	168	52	165
12-02	Missouri River at St. Charles, Mo.	556	*	93,600	*	925	363	685
12-03	Mississippi River at St. Louis, Mo.	848	1,760	110,000	*	938	546	1,610
12-05	Mississippi River at Thebes, Ill.	828	1,820	103,000	*	908	481	1,660
12-06	Ohio River at Olmsted, Ill.	1,370	*	72,800	*	103	*	1,570
12-07	Mississippi River below Hickman, Ky.	2,180	293	164,000	*	1,030	397	1,450
12-08	Mississippi River at Fulton, Tenn.	2,300	*	181,000	*	1,340	637	2,290
12-11	Mississippi River at Helena, Ark.	2,130	*	164,000	*	965	*	1,970
12-12	White River at Mile 11.5, Ark.	14	*	1,630	*	12	*	142
12-13	Mississippi River above Arkansas City, Ark.	2,270	2,420	178,000	*	1,210	784	1,470
12-14	Yazoo River at Mile 10, Miss.	2.6	17	764	*	*	*	44
12-15	Mississippi River below Vicksburg, Miss.	2,080	1,310	179,000	*	1,300	427	1,370
12-17	Old River Outflow Channel near Knox Landing, La.	367	445	32,100	*	216	68	569
12-18	Mississippi River near St. Francisville, La.	1,680	1,540	147,000	*	958	287	1,450
12-20	Mississippi River below Belle Chasse, La.	1,910	3,140	164,000	*	1,110	237	1,410

Table 48.-- Discharge and corresponding transport data for dissolved trace elements in water samples collected from the Mississippi River and some of its tributaries during the May-June 1988 cruise

[*, concentration less than the detection limit; All results are in kilograms per day except discharge, which is in cubic meters per second]

Date 1988	Sampling site	Discharge	Aluminum	Arsenic	Barium	Beryllium	Boron	Cadmium
5-16	Illinois River below Meredosia, Ill.	332	229	64	1,540	4.1	3,500	12
5-17	Mississippi River near Winfield, Mo.	1,740	831	248	7,550	19	4,270	55
5-19	Missouri River at Hermann, Mo.	1,480	392	366	12,000	19	11,600	63
5-20	Mississippi River at St. Louis, Mo.	3,350	1,140	664	22,000	44	16,300	171
5-22	Mississippi River at Thebes, Ill.	3,590	*	406	22,700	*	15,800	*
5-23	Ohio River at Olmsted, Ill.	3,230	1,840	201	10,700	17	10,800	*
5-24	Mississippi River below Hickman, Ky.	6,790	2,340	820	37,200	36	29,700	*
5-26	Mississippi River at Fulton, Tenn.	7,170	1,880	924	38,900	365	30,000	349
5-28	Mississippi River at Helena, Ark.	7,050	81,400	1,010	40,100	366	28,200	393
5-29	White River at Mile 11.5, Ark.	438	116	34	1,430	22	421	25
5-29	Arkansas River at Mile 1.0, Ark.	8,160	11,100	998	44,800	262	32,500	230
5-30	Mississippi River above Arkansas City, Ark.	73	40	8.1	479	2.3	113	1.1
6-02	Mississippi River below Vicksburg, Miss.	7,950	4,130	863	41,500	248	28,600	142
6-04	Old River Outflow Channel near Knox Landing, La.	2,150	553	157	11,500	*	6,910	*
6-05	Mississippi River near St. Francisville, La.	5,700	721	467	32,600	*	19,800	*
6-07	Mississippi River below Belle Chasse, La.	5,570	6,920	522	34,000	*	17,400	*

Table 48.-- Discharge and corresponding transport data for dissolved trace elements in water samples collected from the Mississippi River and some of its tributaries during the May-June 1988 cruise -- Continued

Date 1988	Sampling site	Chromium	Cobalt	Copper	Iron	Lead	Lithium	Manganese
5-16	Illinois River below Meredosia, Ill.	13	16	67	*	8.5	186	21
5-17	Mississippi River near Winfield, Mo.	85	42	198	*	26	880	855
5-19	Missouri River at Hermann, Mo.	73	*	242	*	32	4,650	95
5-20	Mississippi River at St. Louis, Mo.	311	77	464	*	105	5,520	259
5-22	Mississippi River at Thebes, Ill.	*	*	29	*	*	4,890	*
5-23	Ohio River at Olmsted, Ill.	*	*	307	*	*	1,310	101
5-24	Mississippi River below Hickman, Ky.	*	*	658	*	*	7,350	275
5-26	Mississippi River at Fulton, Tenn.	574	7	1,370	*	68	7,310	839
5-28	Mississippi River at Helena, Ark.	759	27	1,140	*	190	6,580	26,900
5-29	White River at Mile 11.5, Ark.	65	17	25	*	4.1	34	221
5-29	Arkansas River at Mile 1.0, Ark.	600	4	1,060	20,100	291	7,340	2,490
5-30	Mississippi River above Arkansas City, Ark.	9.6	*	7.1	*	2.4	17	636
6-02	Mississippi River below Vicksburg, Miss.	945	*	999	*	247	6,500	304
6-04	Old River Outflow Channel near Knox Landing, La.	*	*	13	*	*	1,690	*
6-05	Mississippi River near St. Francisville, La.	*	*	19	*	*	4,240	*
6-07	Mississippi River below Belle Chasse, La.	*	*	193	*	*	4,410	115

Table 48.-- Discharge and corresponding transport data for dissolved trace elements in water samples collected from the Mississippi River and some of its tributaries during the May-June 1988 cruise -- Continued

Date 1988	Sampling site	Molybdenum	Nickel	Strontium	Thallium	Uranium	Vanadium	Zinc
5-16	Illinois River below Meredosia, Ill.	165	234	5,590	*	36	40	106
5-17	Mississippi River near Winfield, Mo.	189	284	15,100	*	209	175	149
5-19	Missouri River at Hermann, Mo.	395	*	59,600	*	440	354	190
5-20	Mississippi River at St. Louis, Mo.	792	571	76,500	*	428	524	335
5-22	Mississippi River at Thebes, Ill.	716	481	85,600	*	938	407	*
5-23	Ohio River at Olmsted, Ill.	769	*	54,800	106	259	*	121
5-24	Mississippi River below Hickman, Ky.	1,700	*	140,000	218	1,340	*	*
5-26	Mississippi River at Fulton, Tenn.	1,600	1,680	138,000	*	1,270	*	961
5-28	Mississippi River at Helena, Ark.	1,500	1,250	131,000	*	1,270	*	1,650
5-29	White River at Mile 11.5, Ark.	35	35	1,520	*	23	*	54
5-29	Arkansas River at Mile 1.0, Ark.	1,860	2,990	144,000	99	1,400	*	952
5-30	Mississippi River above Arkansas City, Ark.	8.1	*	766	0.8	4.3	*	7.6
6-02	Mississippi River below Vicksburg, Miss.	1,670	*	149,000	92	1,320	*	1,170
6-04	Old River Outflow Channel near Knox Landing, La.	413	643	40,000	*	301	118	*
6-05	Mississippi River near St. Francisville, La.	1,090	818	110,000	*	775	789	*
6-07	Mississippi River below Belle Chasse, La.	993	1,960	109,000	*	849	400	*

Table 49.-- Discharge and corresponding transport data for dissolved trace elements in water samples collected from the Mississippi River and some of its tributaries during the March-April 1989 cruise

[*, concentration less than the detection limit; All results are in kilograms per day except discharge, which is in cubic meters per second]

Date 1989	Sampling site	Discharge	Aluminum	Arsenic	Barium	Beryllium	Boron	Cadmium
3-09	Illinois River at Hardin, Ill.	410	152	72	1,790	*	4,780	*
3-10	Mississippi River near Winfield, Mo.	850	260	70	3,340	*	2,740	*
3-12	Missouri River at Hermann, Mo.	1,480	1,130	217	8,340	*	6,470	*
3-13	Mississippi River at St. Louis, Mo.	3,940	1,240	522	18,400	*	20,700	*
3-15	Mississippi River at Thebes, Ill.	4,890	1,110	432	24,900	*	23,600	*
3-16	Ohio River at Olmsted, Ill.	20,400	15,000	*	47,000	*	28,300	*
3-17	Mississippi River below Hickman, Ky.	24,700	22,600	*	72,300	*	48,700	*
3-19	Mississippi River below Fulton, Tenn.	24,800	12,900	*	77,700	*	52,800	*
3-21	Mississippi River at Helena, Ark.	25,900	373,000	*	93,200	*	52,900	*
3-22	White River at Mile 11.5, Ark.	1,500	1,120	125	4,040	*	971	*
3-23	Arkansas River at Pendleton, Ark.	1,900	1,010	153	8,100	*	4,540	*
3-24	Mississippi River above Arkansas City, Ark.	26,800	10,600	2,230	101,000	*	58,700	*
3-26	Yazoo River below Steele Bayou, Miss.	1,500	1,230	*	3,260	*	1,610	*
3-27	Mississippi River below Vicksburg, Miss.	26,600	9,250	2,190	105,000	*	55,400	*
3-29	Old River Outflow Channel near Knox Landing, La.	6,160	2,100	735	25,100	*	12,400	*
3-30	Mississippi River near St. Francisville, La.	23,100	4,410	2,260	95,500	*	45,600	*
4-01	Mississippi River below Belle Chasse, La.	22,500	6,300	1,880	95,400	*	44,200	*

Table 49.-- Discharge and corresponding transport data for dissolved trace elements in water samples collected from the Mississippi River and some of its tributaries during the March-April 1989 cruise -- Continued

Date 1989	Sampling site	Chromium	Cobalt	Copper	Iron	Lead	Lithium	Manganese
3-09	Illinois River at Hardin, Ill.	34	30	77	*	9	229	603
3-10	Mississippi River near Winfield, Mo.	53	34	89	1,220	8.8	240	130
3-12	Missouri River at Hermann, Mo.	48	44	130	1,130	15	1,910	568
3-13	Mississippi River at St. Louis, Mo.	86	153	429	*	24	2,760	999
3-15	Mississippi River at Thebes, Ill.	*	180	540	*	58	3,340	555
3-16	Ohio River at Olmsted, Ill.	*	361	1,180	12,300	*	2,970	6,990
3-17	Mississippi River below Hickman, Ky.	*	489	1,560	*	*	5,640	3,610
3-19	Mississippi River below Fulton, Tenn.	*	499	1,580	*	*	5,750	3,590
3-21	Mississippi River at Helena, Ark.	*	743	1,940	--	*	6,080	25,000
3-22	White River at Mile 11.5, Ark.	*	13	41	1,780	*	29	416
3-23	Arkansas River at Pendleton, Ark.	*	26	82	1,520	*	362	313
3-24	Mississippi River above Arkansas City, Ark.	*	492	1,130	*	*	6,800	3,560
3-26	Yazoo River below Steele Bayou, Miss.	*	4	90	4,160	*	110	1,220
3-27	Mississippi River below Vicksburg, Miss.	*	443	1,120	*	*	6,710	1,710
3-29	Old River Outflow Channel near Knox Landing, La.	*	90	494	*	*	1,620	1,350
3-30	Mississippi River near St. Francisville, La.	*	326	1,740	*	*	6,190	3,290
4-01	Mississippi River below Belle Chasse, La.	*	255	1,790	*	*	5,870	4,230

Table 49.-- Discharge and corresponding transport data for dissolved trace elements in water samples collected from the Mississippi River and some of its tributaries during the March-April 1989 cruise -- Continued

Date 1989	Sampling site	Molybdenum	Nickel	Strontium	Thallium	Uranium	Vanadium	Zinc
3-09	Illinois River at Hardin, Ill.	225	680	9,790	*	57	62	296
3-10	Mississippi River near Winfield, Mo.	95	679	6,830	*	58	50	212
3-12	Missouri River at Hermann, Mo.	226	959	34,200	*	407	157	204
3-13	Mississippi River at St. Louis, Mo.	815	3,120	66,600	*	672	333	729
3-15	Mississippi River at Thebes, Ill.	898	3,510	81,100	*	747	480	830
3-16	Ohio River at Olmsted, Ill.	1,350	8,340	189,000	*	303	580	438
3-17	Mississippi River below Hickman, Ky.	2,170	11,400	258,000	*	963	932	998
3-19	Mississippi River below Fulton, Tenn.	2,000	11,700	254,000	*	1,010	856	1,310
3-21	Mississippi River at Helena, Ark.	2,020	12,700	271,000	*	1,130	1,650	1,940
3-22	White River at Mile 11.5, Ark.	40	400	3,520	*	*	44	77
3-23	Arkansas River at Pendleton, Ark.	93	683	27,500	*	79	76	108
3-24	Mississippi River above Arkansas City, Ark.	2,250	12,500	283,000	*	1,120	1,150	8,590
3-26	Yazoo River below Steele Bayou, Miss.	20	307	4,670	*	*	68	87
3-27	Mississippi River below Vicksburg, Miss.	2,160	11,700	280,000	*	1,160	1,210	1,120
3-29	Old River Outflow Channel near Knox Landing, La.	540	2,850	64,300	*	359	379	2,000
3-30	Mississippi River near St. Francisville, La.	1,960	10,800	242,000	*	1,410	1,400	1,720
4-01	Mississippi River below Belle Chasse, La.	2,020	9,800	235,000	*	1,500	1,710	3,770

Table 50.-- Discharge and corresponding transport data for dissolved trace elements in water samples collected from the Mississippi River and some of its tributaries during the June 1989 cruise

[*, concentration less than the detection limit; All results are in kilograms per day except discharge, which is in cubic meters per second]

Date 1989	Sampling site	Discharge	Aluminum	Arsenic	Barium	Beryllium	Boron	Cadmium
6-04	Illinois River at Hardin, Ill.	780	488	212	4,460	2.9	10,400	*
6-05	Mississippi River near Winfield, Mo.	2,320	938	458	12,600	*	8,880	*
6-07	Missouri River at Hermann, Mo.	1,760	906	399	13,300	*	16,800	*
6-08	Mississippi River at St. Louis, Mo.	4,760	1,430	835	30,900	*	37,500	*
6-10	Mississippi River at Thebes, Ill.	5,230	1,800	1,140	34,300	15	43,200	*
6-11	Ohio River at Olmsted, Ill.	8,760	4,520	925	29,500	*	24,700	*
6-12	Mississippi River below Hickman, Ky.	14,100	7,220	1,810	64,400	*	57,200	*
6-14	Mississippi River at Fulton, Tenn.	15,300	7,940	1,810	72,200	*	63,600	*
6-17	Mississippi River at Helena, Ark.	16,900	11,600	2,000	75,800	*	63,700	*
6-18	White River at Mile 11.5, Ark.	770	1,480	66	2,910	*	614	*
6-19	Arkansas River at Pendleton, Ark.	3,600	20,400	554	23,000	*	13,500	*
6-20	Mississippi River above Arkansas City, Ark.	23,300	145,000	3,020	102,000	*	69,400	*
6-22	Yazoo River below Steele Bayou, Miss.	1,070	2,210	150	2,350	*	1,380	*
6-23	Mississippi River below Vicksburg, Miss.	24,800	9,600	2,660	103,000	*	66,000	*
6-25	Old River Outflow Channel near Knox Landing, La.	4,890	1,880	518	20,400	*	13,300	*
6-26	Mississippi River near St. Francisville, La.	19,000	6,080	2,430	80,200	*	55,500	*
6-28	Mississippi River below Belle Chasse, La.	20,100	7,820	3,490	86,700	*	60,200	*

Table 50.-- Discharge and corresponding transport data for dissolved trace elements in water samples collected from the Mississippi River and some of its tributaries during the June 1989 cruise -- Continued

Date 1989	Sampling site	Chromium	Cobalt	Copper	Iron	Lead	Lithium	Manganese
6-04	Illinois River at Hardin, Ill.	38	49	145	*	5.8	427	24
6-05	Mississippi River near Winfield, Mo.	79	84	287	*	*	947	84
6-07	Missouri River at Hermann, Mo.	85	55	235	*	*	4,970	37
6-08	Mississippi River at St. Louis, Mo.	149	173	625	*	*	6,910	176
6-10	Mississippi River at Thebes, Ill.	176	189	727	*	*	7,270	265
6-11	Ohio River at Olmsted, Ill.	*	88	927	*	*	1,590	749
6-12	Mississippi River below Hickman, Ky.	*	212	1,540	*	*	6,550	4,230
6-14	Mississippi River at Fulton, Tenn.	*	202	1,600	*	*	6,930	4,040
6-17	Mississippi River at Helena, Ark.	*	178	1,780	*	*	6,480	237
6-18	White River at Mile 11.5, Ark.	*	2.2	36	1,770	*	20	111
6-19	Arkansas River at Pendleton, Ark.	*	84	539	19,000	53	1,060	1,050
6-20	Mississippi River above Arkansas City, Ark.	*	586	2,880	156,000	336	7,140	8,900
6-22	Yazoo River below Steele Bayou, Miss.	*	5.3	176	3,630	*	64	243
6-23	Mississippi River below Vicksburg, Miss.	*	447	2,940	*	*	6,220	710
6-25	Old River Outflow Channel near Knox Landing, La.	*	92	569	*	*	1,300	161
6-26	Mississippi River near St. Francisville, La.	*	427	2,480	*	*	5,550	465
6-28	Mississippi River below Belle Chasse, La.	*	423	3,580	*	*	6,100	464

Table 50.-- Discharge and corresponding transport data for dissolved trace elements in water samples collected from the Mississippi River and some of its tributaries during the June 1989 cruise -- Continued

Date 1989	Sampling site	Molybdenum	Nickel	Strontium	Thallium	Uranium	Vanadium	Zinc
6-04	Illinois River at Hardin, Ill.	385	972	14,700	3.9	109	226	287
6-05	Mississippi River near Winfield, Mo.	372	1,470	18,900	*	273	442	654
6-07	Missouri River at Hermann, Mo.	502	1,300	60,800	*	650	404	824
6-08	Mississippi River at St. Louis, Mo.	1,260	3,600	93,800	*	1,050	1,080	1,580
6-10	Mississippi River at Thebes, Ill.	1,410	3,950	97,000	*	1,060	1,200	1,400
6-11	Ohio River at Olmsted, Ill.	1,710	4,130	129,000	55	392	499	1,790
6-12	Mississippi River below Hickman, Ky.	2,910	7,870	218,000	*	1,210	1,540	2,170
6-14	Mississippi River at Fulton, Tenn.	2,890	8,010	236,000	*	1,220	1,460	3,440
6-17	Mississippi River at Helena, Ark.	3,230	8,350	255,000	*	1,050	1,650	1,310
6-18	White River at Mile 11.5, Ark.	54	252	7,100	*	16	48	79
6-19	Arkansas River at Pendleton, Ark.	340	1,780	85,000	26	278	519	804
6-20	Mississippi River above Arkansas City, Ark.	3,530	11,500	374,000	*	1,610	2,460	4,610
6-22	Yazoo River below Steele Bayou, Miss.	33	226	5,690	*	*	94	178
6-23	Mississippi River below Vicksburg, Miss.	3,610	10,400	337,000	*	1,260	2,180	8,130
6-25	Old River Outflow Channel near Knox Landing, La.	707	2,210	63,100	*	260	469	599
6-26	Mississippi River near St. Francisville, La.	3,150	8,690	254,000	*	1,090	2,150	3,280
6-28	Mississippi River below Belle Chasse, La.	3,190	9,290	239,000	*	1,220	2,400	2,920

Table 51.-- Discharge and corresponding transport data for dissolved trace elements in water samples collected from the Mississippi River and some of its tributaries during the February-March 1990 cruise

[*, concentration less than the detection limit; All results are in kilograms per day except discharge, which is in cubic meters per second]

Date 1990	Sampling site	Discharge	Aluminum	Arsenic	Barium	Beryllium	Boron	Cadmium
2-23	Cumberland River near Smithland, Ky.	2,170	2,600	*	4,250	*	2,400	*
2-24	Tennessee River near Calvert City, Ky.	6,570	15,200	*	11,300	*	4,140	*
2-25	Mississippi River near Cache, Ill.	4,240	2,620	646	25,400	*	23,900	*
2-28	Wabash River near New Haven, Ill.	2,340	961	*	8,170	*	7,560	*
3-01	Ohio River at Uniontown, Ky.	6,620	7,030	*	17,900	*	14,700	*
3-03	Ohio River at Olmsted, Ill.	16,100	8,700	*	39,400	*	29,700	*
3-04	Mississippi River below Hickman, Ky.	21,000	11,200	*	66,800	*	45,700	*
3-05	Mississippi River below Fulton, Tenn.	22,800	9,620	*	70,400	*	50,600	*
3-07	Mississippi River at Helena, Ark.	23,330	8,070	2,580	82,700	*	48,100	*
3-08	Mississippi River above Arkansas City, Ark.	33,200	9,110	2,430	115,000	*	64,000	*
3-10	Mississippi River below Vicksburg, Miss.	34,100	11,500	2,970	118,000	*	63,000	*
3-12	Mississippi River near St. Francisville, La.	26,300	7,960	1,770	96,000	*	49,000	*
3-14	Mississippi River below Belle Chasse, La.	26,700	7,380	3,090	101,000	87	51,000	*

Table 51.-- Discharge and corresponding transport data for dissolved trace elements in water samples collected from the Mississippi River and some of its tributaries during the February-March 1990 cruise -- Continued

Date 1990	Sampling site	Chromium	Cobalt	Copper	Iron	Lead	Lithium	Manganese
2-23	Cumberland River near Smithland, Ky.	*	53	147	2,240	*	138	264
2-24	Tennessee River near Calvert City, Ky.	*	107	419	10,900	*	345	619
2-25	Mississippi River near Cache, Ill.	228	195	711	2,590	*	3,360	512
2-28	Wabash River near New Haven, Ill.	*	102	345	1,120	*	308	711
3-01	Ohio River at Uniontown, Ky.	*	180	861	6,920	*	1,560	3,420
3-03	Ohio River at Olmsted, Ill.	*	303	1,790	*	*	2,340	5,090
3-04	Mississippi River below Hickman, Ky.	*	481	2,280	*	156	4,800	5,690
3-05	Mississippi River below Fulton, Tenn.	*	534	2,780	58,600	223	5,080	6,150
3-07	Mississippi River at Helena, Ark.	*	556	3,190	21,900	*	4,940	3,290
3-08	Mississippi River above Arkansas City, Ark.	*	711	3,530	29,500	*	6,460	4,150
3-10	Mississippi River below Vicksburg, Miss.	*	672	4,320	*	*	6,350	3,190
3-12	Mississippi River near St. Francisville, La.	*	546	3,800	*	*	4,900	4,040
3-14	Mississippi River below Belle Chasse, La.	*	588	5,080	*	*	4,960	14,500

Table 51.-- Discharge and corresponding transport data for dissolved trace elements in water samples collected from the Mississippi River and some of its tributaries during the February-March 1990 cruise -- Continued

Date 1990	Sampling site	Molybdenum	Nickel	Strontium	Thallium	Uranium	Vanadium	Zinc
2-23	Cumberland River near Smithland, Ky.	144	1,110	15,900	*	*	106	387
2-24	Tennessee River near Calvert City, Ky.	119	1,840	26,000	*	*	296	984
2-25	Mississippi River near Cache, Ill.	992	3,460	62,900	*	754	571	1,160
2-28	Wabash River near New Haven, Ill.	347	1,930	22,200	*	151	100	324
3-01	Ohio River at Uniontown, Ky.	888	3,790	101,000	*	131	205	1,390
3-03	Ohio River at Olmsted, Ill.	1,790	8,100	161,000	*	548	523	4,420
3-04	Mississippi River below Hickman, Ky.	2,470	11,100	234,000	*	1,210	987	2,630
3-05	Mississippi River below Fulton, Tenn.	2,480	11,900	237,000	*	1,260	1,300	4,360
3-07	Mississippi River at Helena, Ark.	2,570	11,700	238,000	*	1,340	1,450	4,560
3-08	Mississippi River above Arkansas City, Ark.	2,830	14,700	357,000	*	1,840	1,550	4,000
3-10	Mississippi River below Vicksburg, Miss.	2,830	14,000	291,000	*	1,580	1,700	6,080
3-12	Mississippi River near St. Francisville, La.	2,190	11,700	248,000	*	1,240	1,320	14,600
3-14	Mississippi River below Belle Chasse, La.	2,290	11,400	248,000	*	1,660	1,890	4,610

Table 52.-- Discharge and corresponding transport data for dissolved trace elements in water samples collected from the Mississippi River and some of its tributaries during the May-June 1990 cruise

[*, concentration less than the detection limit; All results are in kilograms per day except discharge, which is in cubic meters per second]

Date 1990	Sampling site	Discharge	Aluminum	Arsenic	Barium	Beryllium	Boron	Cadmium
6-07	Illinois River at Valley City, Ill.	1,230	1,110	79	7,010	*	10,200	*
6-11	Mississippi River below Grafton, Ill.	5,040	2,520	446	33,500	12	14,500	*
6-13	Mississippi River at Thebes, Ill.	12,600	15,010	2,180	84,400	30	39,200	*
6-14	Ohio River at Olmsted, Ill.	9,550	9,150	*	26,000	39	24,400	*
6-18	Mississippi River below Memphis, Tenn.	20,800	23,200	1,690	110,500	*	73,500	*
6-20	Mississippi River below Arkansas City, Ark.	25,500	25,000	2,200	131,000	*	76,100	*
6-22	Yazoo River below Steele Bayou, Miss.	1,250	373	403	3,670	*	2,800	*
6-23	Mississippi River below Vicksburg, Miss.	27,300	11,200	3,490	134,000	*	91,200	*
6-25	Mississippi River near St. Francisville, La.	23,200	26,600	3,800	116,200	*	63,200	*
6-27	Mississippi River below Belle Chasse, La.	23,300	11,500	3,720	115,800	*	61,700	*

Table 52.-- Discharge and corresponding transport data for dissolved trace elements in water samples collected from the Mississippi River and some of its tributaries during the May-June 1990 cruise -- Continued

Date 1990	Sampling site	Chromium	Cobalt	Copper	Iron	Lead	Lithium	Manganese
6-07	Illinois River at Valley City, Ill.	*	75	219	829	12	455	850
6-11	Mississippi River below Grafton, Ill.	*	155	880	*	*	1,390	215
6-13	Mississippi River at Thebes, Ill.	*	357	2,380	31,900	75	5,560	760
6-14	Ohio River at Olmsted, Ill.	*	368	1,370	*	*	1,520	391
6-18	Mississippi River below Memphis, Tenn.	*	505	3,400	15,800	*	6,780	1,350
6-20	Mississippi River below Arkansas City, Ark.	5,500	1,380	4,670	1,440,000	1,360	8,320	74,700
6-22	Yazoo River below Steele Bayou, Miss.	*	22	211	1,210	*	185	7,290
6-23	Mississippi River below Vicksburg, Miss.	*	839	4,670	*	*	7,940	1,590
6-25	Mississippi River near St. Francisville, La.	460	749	4,100	189,000	237	6,440	18,500
6-27	Mississippi River below Belle Chasse, La.	*	556	3,660	*	*	6,620	1,500

Table 52.-- Discharge and corresponding transport data for dissolved trace elements in water samples collected from the Mississippi River and some of its tributaries during the May-June 1990 cruise -- Continued

Date 1990	Sampling site	Molybdenum	Nickel	Strontium	Thallium	Uranium	Vanadium	Zinc
6-07	Illinois River at Valley City, Ill.	380	1,500	21,800	*	187	196	260
6-11	Mississippi River below Grafton, Ill.	860	3,660	53,500	*	920	756	353
6-13	Mississippi River at Thebes, Ill.	1,900	8,060	171,000	*	1,780	2,300	1,580
6-14	Ohio River at Olmsted, Ill.	1,300	5,280	103,000	*	195	517	1,300
6-18	Mississippi River below Memphis, Tenn.	3,100	11,800	269,000	*	1,490	2,660	1,480
6-20	Mississippi River below Arkansas City, Ark.	2,200	15,400	316,000	112	1,790	5,950	6,100
6-22	Yazoo River below Steele Bayou, Miss.	78	334	6,130	*	12	122	130
6-23	Mississippi River below Vicksburg, Miss.	3,700	14,400	333,000	120	1,620	3,450	1,480
6-25	Mississippi River near St. Francisville, La.	3,100	13,600	289,000	*	1,750	3,370	2,920
6-27	Mississippi River below Belle Chasse, La.	3,600	13,300	293,000	*	1,360	3,280	1,850

Table 53.-- Discharge and corresponding transport data for dissolved major elements in water samples collected from the Mississippi River and some of its tributaries during the July-August 1987 cruise

[--, not determined; All results are in kilograms per day except discharge, which is in cubic meters per second]

Date 1987	Sampling site	Discharge	Calcium	Magnesium	Potassium	Sodium	Silica
7-17	Illinois River below Meredosia, Ill.	312	1,700,000	714,000	123,000	1,100,000	12,500
7-18	Mississippi River near Winfield, Mo.	1,370	4,880,000	2,430,000	354,000	1,320,000	610,000
7-20	Missouri River at Hermann, Mo.	2,640	10,200,000	2,780,000	1,330,000	6,810,000	3,470,000
7-21	Mississippi River at Hartford, Ill.	1,500	5,650,000	2,640,000	438,000	1,960,000	997,000
7-22	Mississippi River at St. Louis, Mo.	3,940	15,700,000	5,260,000	--	8,560,000	3,890,000
7-23	Mississippi River at Chester, Ill.	4,250	15,900,000	5,520,000	1,730,000	8,510,000	3,720,000
7-26	Ohio River below Smithland Locks and Dam, Ill.-Ky.	652	--	--	--	--	--
7-27	Ohio River at Olmsted, Ill.	2,070	6,520,000	1,570,000	492,000	2,300,000	876,000
7-28	Mississippi River below Hickman, Ky.	6,270	24,100,000	7,820,000	--	12,700,000	4,630,000
7-30	Mississippi River at Helena, Ark.	6,850	24,100,000	7,530,000	2,420,000	11,100,000	6,020,000
7-31	White River at Mile 11.5, Ark.	332	943,000	402,000	45,300	106,000	189,000
8-01	Arkansas River at Mile 55.9, Ark.	790	3,420,000	1,010,000	366,000	6,570,000	225,000
8-02	Mississippi River above Arkansas City, Ark.	7,630	28,600,000	8,970,000	2,740,000	18,500,000	6,560,000
8-04	Mississippi River below Vicksburg, Miss.	7,750	29,900,000	9,140,000	3,440,000	18,200,000	7,510,000
8-06	Old River Outflow Channel near Knox Landing, La.	2,050	7,620,000	2,370,000	719,000	4,470,000	1,550,000
8-07	Mississippi River near St. Francisville, La.	6,190	23,500,000	7,360,000	2,170,000	14,000,000	5,370,000

Table 54.-- Discharge and corresponding transport data for dissolved major elements in water samples collected from the Mississippi River and some of its tributaries during the November-December 1987 cruise

[All results are in kilograms per day except discharge, which is in cubic meters per second]

Date 1987	Sampling site	Discharge	Calcium	Magnesium	Potassium	Sodium	Silica
11-29	Illinois River below Meredosia, Ill.	262	1,440,000	657,000	103,000	996,000	75,300
11-30	Mississippi River near Winfield, Mo.	2,040	7,290,000	3,750,000	478,000	2,170,000	199,000
12-02	Missouri River at St. Charles, Mo.	2,810	13,500,000	4,610,000	1,140,000	10,500,000	2,770,000
12-03	Mississippi River at St. Louis, Mo.	5,440	22,800,000	9,290,000	2,170,000	12,600,000	3,680,000
12-05	Mississippi River at Thebes, Ill.	5,190	21,000,000	8,630,000	1,760,000	11,800,000	3,900,000
12-06	Ohio River at Olmsted, Ill.	4,200	13,700,000	4,040,000	1,190,000	8,590,000	2,160,000
12-07	Mississippi River below Hickman, Ky.	8,820	33,400,000	11,900,000	2,710,000	19,100,000	5,030,000
12-08	Mississippi River at Fulton, Tenn.	9,470	35,900,000	12,900,000	2,900,000	21,300,000	5,650,000
12-11	Mississippi River at Helena, Ark.	8,770	32,100,000	11,400,000	2,630,000	18,700,000	4,930,000
12-12	White River at Mile 11.5, Ark.	519	1,020,000	396,000	109,000	165,000	419,000
12-13	Mississippi River above Arkansas City, Ark.	9,920	34,700,000	13,000,000	2,970,000	23,700,000	4,530,000
12-14	Yazoo River at Mile 10, Miss.	177	123,000	42,500	50,800	87,700	159,000
12-15	Mississippi River below Vicksburg, Miss.	10,410	34,300,000	12,400,000	3,150,000	22,900,000	5,300,000
12-17	Old River Outflow Channel near Knox Landing, La.	1,830	6,140,000	2,220,000	591,000	4,200,000	1,050,000
12-18	Mississippi River near St. Francisville, La.	8,180	28,000,000	10,200,000	2,470,000	19,200,000	5,160,000
12-20	Mississippi River below Belle Chasse, La.	9,560	30,300,000	11,300,000	3,020,000	27,700,000	5,060,000

Table 55.-- Discharge and corresponding transport data for dissolved major elements in water samples collected from the Mississippi River and some of its tributaries during the May-June 1988 cruise

[All results are in kilograms per day except discharge, which is in cubic meters per second]

Date 1988	Sampling site	Discharge	Calcium	Magnesium	Potassium	Sodium	Silica
5-16	Illinois River below Meredosia, Ill.	332	1,750,000	866,000	116,000	978,000	21,900
5-17	Mississippi River near Winfield, Mo.	1,740	5,490,000	3,250,000	499,000	1,720,000	47,200
5-19	Missouri River at Hermann, Mo.	1,480	8,040,000	2,740,000	941,000	6,920,000	1,240,000
5-20	Mississippi River at St. Louis, Mo.	3,350	15,000,000	6,630,000	1,620,000	9,200,000	1,180,000
5-22	Mississippi River at Thebes, Ill.	3,590	16,700,000	7,230,000	1,430,000	10,300,000	1,210,000
5-23	Ohio River at Olmsted, Ill.	3,230	10,200,000	3,400,000	834,000	4,790,000	93,900
5-24	Mississippi River below Hickman, Ky.	6,790	26,900,000	10,600,000	2,280,000	15,000,000	1,340,000
5-26	Mississippi River at Fulton, Tenn.	7,170	27,100,000	10,500,000	2,420,000	14,700,000	1,250,000
5-28	Mississippi River at Helena, Ark.	7,050	25,800,000	9,930,000	2,430,000	13,600,000	1,500,000
5-29	White River at Mile 11.5, Ark.	438	1,240,000	455,000	147,000	134,000	148,000
5-29	Arkansas River at Mile 1.0, Ark.	8,160	29,700,000	11,300,000	2,710,000	15,200,000	1,390,000
5-30	Mississippi River above Arkansas City, Ark.	73	156,000	50,000	21,400	78,800	64,800
6-02	Mississippi River below Vicksburg, Miss.	7,950	30,800,000	11,600,000	2,620,000	15,900,000	1,190,000
6-04	Old River Outflow Channel near Knox Landing, La.	2,150	8,330,000	3,080,000	711,000	4,260,000	353,000
6-05	Mississippi River near St. Francisville, La.	5,700	22,900,000	8,400,000	1,890,000	11,600,000	959,000
6-07	Mississippi River below Belle Chasse, La.	5,570	22,800,000	8,370,000	1,970,000	15,400,000	1,020,000

Table 56.-- Discharge and corresponding transport data for dissolved major elements in water samples collected from the Mississippi River and some of its tributaries during the March-April 1989 cruise

[All results are in kilograms per day except discharge, which is in cubic meters per second]

Date 1989	Sampling site	Discharge	Calcium	Magnesium	Potassium	Sodium	Silica
3-09	Illinois River at Hardin, Ill.	410	2,820,000	1,110,000	149,000	2,600,000	186,000
3-10	Mississippi River near Winfield, Mo.	850	3,700,000	1,550,000	259,000	1,330,000	341,000
3-12	Missouri River at Hermann, Mo.	1,480	5,700,000	2,090,000	471,000	4,160,000	1,180,000
3-13	Mississippi River at St. Louis, Mo.	3,940	17,600,000	6,750,000	1,250,000	12,200,000	1,930,000
3-15	Mississippi River at Thebes, Ill.	4,890	20,300,000	7,850,000	1,550,000	13,300,000	2,420,000
3-16	Ohio River at Olmsted, Ill.	20,400	48,500,000	11,000,000	2,960,000	13,000,000	9,470,000
3-17	Mississippi River below Hickman, Ky.	24,700	67,100,000	18,500,000	4,860,000	25,800,000	11,200,000
3-19	Mississippi River below Fulton, Tenn.	24,800	66,100,000	18,300,000	4,440,000	24,800,000	11,100,000
3-21	Mississippi River at Helena, Ark.	25,900	70,600,000	19,400,000	4,630,000	26,500,000	12,700,000
3-22	White River at Mile 11.5, Ark.	1,500	2,330,000	870,000	194,000	232,000	573,000
3-23	Arkansas River at Pendleton, Ark.	1,900	4,000,000	1,030,000	364,000	5,120,000	621,000
3-24	Mississippi River above Arkansas City, Ark.	26,800	74,400,000	21,500,000	5,310,000	31,500,000	12,700,000
3-26	Yazoo River below Steele Bayou, Miss.	1,500	921,000	287,000	306,000	413,000	671,000
3-27	Mississippi River below Vicksburg, Miss.	26,600	72,300,000	20,600,000	5,390,000	31,500,000	12,600,000
3-29	Old River Outflow Channel near Knox Landing, La.	6,160	16,800,000	4,700,000	1,260,000	7,240,000	2,910,000
3-30	Mississippi River near St. Francisville, La.	23,100	61,900,000	17,500,000	4,490,000	27,000,000	10,800,000
4-01	Mississippi River below Belle Chasse, La.	22,500	60,400,000	16,700,000	4,680,000	29,400,000	10,600,000

Table 57.-- Discharge and corresponding transport data for dissolved major elements in water samples collected from the Mississippi River and some of its tributaries during the June 1989 cruise

[All results are in kilograms per day except discharge, which is in cubic meters per second]

Date 1989	Sampling site	Discharge	Calcium	Magnesium	Potassium	Sodium	Silica
6-04	Illinois River at Hardin, Ill.	780	4,700,000	2,130,000	276,000	2,770,000	223,000
6-05	Mississippi River near Winfield, Mo.	2,320	7,670,000	3,880,000	661,000	2,550,000	263,000
6-07	Missouri River at Hermann, Mo.	1,760	8,060,000	3,300,000	776,000	7,830,000	1,190,000
6-08	Mississippi River at St. Louis, Mo.	4,760	20,100,000	8,340,000	1,690,000	13,700,000	1,870,000
6-10	Mississippi River at Thebes, Ill.	5,230	21,800,000	9,160,000	1,850,000	14,400,000	1,950,000
6-11	Ohio River at Olmsted, Ill.	8,760	30,300,000	8,510,000	1,670,000	7,170,000	4,120,000
6-12	Mississippi River below Hickman, Ky.	14,100	48,600,000	17,500,000	3,410,000	20,100,000	5,790,000
6-14	Mississippi River at Fulton, Tenn.	15,300	53,400,000	18,600,000	3,830,000	22,100,000	6,440,000
6-17	Mississippi River at Helena, Ark.	16,900	56,900,000	20,300,000	4,240,000	21,900,000	8,220,000
6-18	White River at Mile 11.5, Ark.	770	2,250,000	1,120,000	134,000	258,000	595,000
6-19	Arkansas River at Pendleton, Ark.	3,600	10,600,000	2,910,000	931,000	25,300,000	1,830,000
6-20	Mississippi River above Arkansas City, Ark.	23,300	68,800,000	23,800,000	5,240,000	44,300,000	12,100,000
6-22	Yazoo River below Steele Bayou, Miss.	1,070	519,000	168,000	240,000	243,000	653,000
6-23	Mississippi River below Vicksburg, Miss.	24,800	72,000,000	22,300,000	5,790,000	42,800,000	12,400,000
6-25	Old River Outflow Channel near Knox Landing, La.	4,890	13,500,000	3,990,000	1,050,000	8,010,000	2,360,000
6-26	Mississippi River near St. Francisville, La.	19,000	54,200,000	15,800,000	4,280,000	31,200,000	9,300,000
6-28	Mississippi River below Belle Chasse, La.	20,100	50,600,000	15,200,000	4,330,000	34,500,000	8,950,000

Table 58.-- Discharge and corresponding transport data for dissolved major elements in water samples collected from the Mississippi River and some of its tributaries during the February-March 1990 cruise

[All results are in kilograms per day except discharge, which is in cubic meters per second]

Date 1990	Sampling site	Discharge	Calcium	Magnesium	Potassium	Sodium	Silica
2-23	Cumberland River near Smithland, Ky.	2,170	5,700,000	775,000	281,000	561,000	946,000
2-24	Tennessee River near Calvert City, Ky.	6,570	9,950,000	1,680,000	738,000	1,980,000	3,050,000
2-25	Mississippi River near Cache, Ill.	4,240	15,900,000	7,660,000	1,770,000	9,140,000	2,550,000
2-28	Wabash River near New Haven, Ill.	2,340	9,110,000	3,250,000	647,000	1,590,000	1,440,000
3-01	Ohio River at Uniontown, Ky.	6,620	19,000,000	5,150,000	1,370,000	5,280,000	3,840,000
3-03	Ohio River at Olmsted, Ill.	16,100	42,700,000	11,100,000	2,920,000	9,750,000	9,100,000
3-04	Mississippi River below Hickman, Ky.	21,000	60,100,000	17,300,000	4,900,000	18,900,000	11,800,000
3-05	Mississippi River below Fulton, Tenn.	22,800	62,300,000	20,200,000	5,120,000	19,400,000	13,200,000
3-07	Mississippi River at Helena, Ark.	23,330	62,300,000	20,400,000	5,650,000	19,600,000	13,200,000
3-08	Mississippi River above Arkansas City, Ark.	33,200	88,600,000	30,000,000	6,600,000	34,400,000	19,000,000
3-10	Mississippi River below Vicksburg, Miss.	34,100	72,400,000	23,000,000	6,780,000	29,500,000	16,400,000
3-12	Mississippi River near St. Francisville, La.	26,300	61,400,000	19,100,000	5,460,000	24,600,000	13,100,000
3-14	Mississippi River below Belle Chasse, La.	26,700	61,300,000	19,000,000	5,770,000	27,900,000	13,500,000

Table 59.-- Discharge and corresponding transport data for dissolved major elements in water samples collected from the Mississippi River and some of its tributaries during the May-June 1990 cruise

[All results are in kilograms per day except discharge, which is in cubic meters per second]

Date 1990	Sampling site	Discharge	Calcium	Magnesium	Potassium	Sodium	Silica
6-06	Illinois River at Valley City, Ill.	1,230	8,100,000	3,460,000	329,000	2,730,000	677,000
6-08	Mississippi River below Grafton, Ill.	5,040	21,700,000	7,880,000	1,610,000	4,880,000	2,860,000
6-13	Mississippi River at Thebes, Ill.	12,600	43,100,000	13,700,000	3,920,000	14,000,000	8,130,000
6-14	Ohio River at Olmsted, Ill.	9,550	28,600,000	6,860,000	1,980,000	5,900,000	4,500,000
6-17	Mississippi River below Memphis, Tenn.	20,800	68,400,000	19,400,000	6,470,000	19,700,000	12,000,000
6-20	Mississippi River below Arkansas City, Ark.	25,500	81,000,000	23,200,000	7,040,000	23,900,000	20,200,000
6-22	Yazoo River below Steele Bayou, Miss.	1,250	1,180,000	364,000	346,000	526,000	698,000
6-23	Mississippi River below Vicksburg, Miss.	27,300	84,300,000	23,500,000	8,020,000	25,300,000	15,800,000
6-25	Mississippi River near St. Francisville, La.	23,200	71,000,000	19,800,000	6,610,000	21,400,000	14,400,000
6-27	Mississippi River below Belle Chasse, La.	23,300	71,400,000	21,000,000	6,640,000	23,500,000	14,100,000

Table 60.-- Discharge and corresponding transport data for dissolved major anions in water samples collected from the Mississippi River and some of its tributaries during the July-August 1987 cruise

[--, not determined; All results are in kilograms per day except discharge, which is in cubic meters per second]

Date 1987	Sampling site	Discharge	Chloride	Sulfate	Nitrate as nitrogen	Bicarbonate
7-17	Illinois River below Meredosia, Ill.	312	--	--	--	--
7-18	Mississippi River near Winfield, Mo.	1,370	1,800,000	4,200,000	200,000	21,400,000
7-20	Missouri River at Hermann, Mo.	2,640	4,000,000	17,900,000	420,000	32,000,000
7-21	Mississippi River at Hartford, Ill.	1,500	2,600,000	5,200,000	250,000	22,700,000
7-22	Mississippi River at St. Louis, Mo.	3,940	6,700,000	22,600,000	550,000	52,500,000
7-23	Mississippi River at Chester, Ill.	4,250	6,900,000	23,400,000	640,000	56,700,000
7-26	Ohio River below Smithland Locks and Dam, Ill.-Ky.	652	--	--	--	--
7-27	Ohio River at Olmsted, Ill.	2,070	2,500,000	8,100,000	640,000	17,000,000
7-28	Mississippi River below Hickman, Ky.	6,270	9,800,000	37,100,000	860,000	79,700,000
7-30	Mississippi River at Helena, Ark.	6,850	9,100,000	30,300,000	850,000	80,500,000
7-31	White River at Mile 11.5, Ark.	332	170,000	200,000	8,000	4,700,000
8-01	Arkansas River at Mile 55.9, Ark.	790	9,000,000	6,200,000	30,000	9,900,000
8-02	Mississippi River above Arkansas City, Ark.	7,630	19,600,000	40,300,000	--	1,100,000
8-04	Mississippi River below Vicksburg, Miss.	7,750	18,500,000	38,900,000	980,000	99,400,000
8-06	Old River Outflow Channel near Knox Landing, La.	2,050	--	--	--	--
8-07	Mississippi River near St. Francisville, La.	6,190	14,200,000	29,700,000	770,000	80,800,000

Table 61.-- Discharge and corresponding transport data for dissolved major anions in water samples collected from the Mississippi River and some of its tributaries during the November-December 1987 cruise

[--, not determined; All results are in kilograms per day except discharge, which is in cubic meters per second]

Date 1987	Sampling site	Discharge	Chloride	Sulfate	Nitrate as nitrogen	Bicarbonate
11-29	Illinois River below Meredosia, Ill.	262	--	--	73,000	--
11-30	Mississippi River near Winfield, Mo.	2,040	3,200,000	5,100,000	270,000	34,600,000
12-02	Missouri River at St. Charles, Mo.	2,810	3,800,000	30,600,000	280,000	--
12-03	Mississippi River at St. Louis, Mo.	5,440	8,700,000	34,600,000	670,000	91,200,000
12-05	Mississippi River at Thebes, Ill.	5,190	8,800,000	35,100,000	670,000	86,600,000
12-06	Ohio River at Olmsted, Ill.	4,200	9,300,000	25,500,000	460,000	--
12-07	Mississippi River below Hickman, Ky.	8,820	16,800,000	54,200,000	1,090,000	112,000,000
12-08	Mississippi River at Fulton, Tenn.	9,470	17,000,000	57,300,000	1,040,000	120,000,000
12-11	Mississippi River at Helena, Ark.	8,770	16,000,000	51,700,000	1,040,000	118,000,000
12-12	White River at Mile 11.5, Ark.	519	300,000	370,000	18,000	--
12-13	Mississippi River above Arkansas City, Ark.	9,920	22,800,000	52,400,000	1,070,000	--
12-14	Yazoo River at Mile 10, Miss.	177	1,000,000	100,000	7,000	--
12-15	Mississippi River below Vicksburg, Miss.	10,410	23,700,000	54,500,000	1,090,000	123,000,000
12-17	Old River Outflow Channel near Knox Landing, La.	1,830	--	--	--	--
12-18	Mississippi River near St. Francisville, La.	8,180	19,000,000	44,300,000	920,000	9,500,000
12-20	Mississippi River below Belle Chasse, La.	9,560	32,800,000	50,300,000	1,040,000	110,000,000

Table 62.-- Discharge and corresponding transport data for dissolved major anions in water samples collected from the Mississippi River and some of its tributaries during the May-June 1988 cruise

[--, not determined; All results are in kilograms per day except discharge, which is in cubic meters per second]

Date 1988	Sampling site	Discharge	Chloride	Sulfate	Nitrate as nitrogen	Bicarbonate
5-16	Illinois River below Meredosia, Ill.	332	--	--	97,000	6,800,000
5-17	Mississippi River near Winfield, Mo.	1,740	2,600,000	5,500,000	190,000	25,100,000
5-19	Missouri River at Hermann, Mo.	1,480	2,500,000	1,900,000	120,000	21,900,000
5-20	Mississippi River at St. Louis, Mo.	3,350	6,300,000	25,600,000	370,000	52,400,000
5-22	Mississippi River at Thebes, Ill.	3,590	6,800,000	28,200,000	430,000	54,200,000
5-23	Ohio River at Olmsted, Ill.	3,230	4,300,000	13,800,000	190,000	32,100,000
5-24	Mississippi River below Hickman, Ky.	6,790	11,800,000	44,300,000	710,000	86,500,000
5-26	Mississippi River at Fulton, Tenn.	7,170	11,900,000	44,600,000	600,000	83,700,000
5-28	Mississippi River at Helena, Ark.	7,050	10,900,000	38,600,000	590,000	80,700,000
5-29	White River at Mile 11.5, Ark.	438	250,000	280,000	--	6,000,000
5-29	Mississippi River above Arkansas City, Ark.	8,160	13,600,000	46,800,000	700,000	106,000,000
5-30	Yazoo River at Mile 10, Miss	73	450,000	590,000	--	780,000
6-02	Mississippi River below Vicksburg, Miss.	7,950	13,400,000	44,200,000	610,000	81,000,000
6-04	Old River Outflow Channel near Knox Landing, La.	2,150	--	--	--	--
6-05	Mississippi River near St. Francisville, La.	5,700	6,070,000	16,900,000	300,000	60,300,000
6-07	Mississippi River below Belle Chasse, La.	5,570	15,100,000	30,300,000	490,000	67,800,000

Table 63.-- Discharge and corresponding transport data for dissolved major anions in water samples collected from the Mississippi River and some of its tributaries during the March-April 1989 cruise

[--, not determined; All results are in kilograms per day except discharge, which is in cubic meters per second]

Date 1989	Sampling site	Discharge	Chloride	Sulfate	Bicarbonate
3-09	Illinois River at Hardin, Ill.	410	3,800,000	3,700,000	3,100,000
3-10	Mississippi River near Winfield, Mo.	850	1,800,000	2,200,000	--
3-12	Missouri River at Hermann, Mo.	1,480	2,000,000	9,600,000	17,500,000
3-13	Mississippi River at St. Louis, Mo.	3,940	14,000,000	20,400,000	48,100,000
3-15	Mississippi River at Thebes, Ill.	4,890	14,200,000	25,200,000	57,600,000
3-16	Ohio River at Olmsted, Ill.	20,400	17,000,000	65,200,000	113,000,000
3-17	Mississippi River below Hickman, Ky.	24,700	30,100,000	86,100,000	180,000,000
3-19	Mississippi River below Fulton, Tenn.	24,800	30,500,000	87,400,000	185,000,000
3-21	Mississippi River at Helena, Ark.	25,900	32,100,000	88,500,000	197,000,000
3-22	White River at Mile 11.5, Ark.	1,500	460,000	710,000	10,500,000
3-23	Arkansas River at Pendleton, Ark.	1,900	6,900,000	5,100,000	11,900,000
3-24	Mississippi River above Arkansas City, Ark.	26,800	37,000,000	87,400,000	226,000,000
3-26	Yazoo River below Steele Bayou, Miss.	1,500	270,000	660,000	3,600,000
3-27	Mississippi River below Vicksburg, Miss.	26,600	36,400,000	87,500,000	225,000,000
3-29	Old River Outflow Channel near Knox Landing, La.	6,160	--	--	51,100,000
3-30	Mississippi River near St. Francisville, La.	23,100	30,200,000	72,700,000	191,000,000
4-01	Mississippi River below Belle Chasse, La.	22,500	32,900,000	68,300,000	182,000,000

Table 64.-- Discharge and corresponding transport data for dissolved major anions in water samples collected from the Mississippi River and some of its tributaries during the June 1989 cruise

[--, not determined; All results are in kilograms per day except discharge, which is in cubic meters per second]

Date 1989	Sampling site	Discharge	Chloride	Sulfate	Bicarbonate
6-04	Illinois River at Hardin, Ill.	780	--	--	--
6-05	Mississippi River near Winfield, Mo.	2,320	--	--	--
6-07	Missouri River at Hermann, Mo.	1,760	--	--	11,700,000
6-08	Mississippi River at St. Louis, Mo.	4,760	10,300,000	33,900,000	60,700,000
6-10	Mississippi River at Thebes, Ill.	5,230	11,600,000	36,500,000	73,800,000
6-11	Ohio River at Olmsted, Ill.	8,760	9,400,000	35,200,000	62,400,000
6-12	Mississippi River below Hickman, Ky.	14,100	20,100,000	66,400,000	133,000,000
6-14	Mississippi River at Fulton, Tenn.	15,300	21,000,000	70,300,000	164,000,000
6-17	Mississippi River at Helena, Ark.	16,900	21,400,000	68,300,000	173,000,000
6-18	White River at Mile 11.5, Ark.	770	300,000	380,000	--
6-19	Arkansas River at Pendleton, Ark.	3,600	32,000,000	14,100,000	27,300,000
6-20	Mississippi River above Arkansas City, Ark.	23,300	58,400,000	81,200,000	216,000,000
6-22	Yazoo River below Steele Bayou, Miss.	1,070	370,000	410,000	1,900,000
6-23	Mississippi River below Vicksburg, Miss.	24,800	52,800,000	77,500,000	218,000,000
6-25	Old River Outflow Channel near Knox Landing, La.	4,890	--	--	39,500,000
6-26	Mississippi River near St. Francisville, La.	19,000	38,500,000	58,900,000	164,000,000
6-28	Mississippi River below Belle Chasse, La.	20,100	51,100,000	64,900,000	178,000,000

Table 65.– Discharge and corresponding transport data for dissolved major anions in water samples collected from the Mississippi River and some of its tributaries during the February-March 1990 cruise

[--, not determined; All results are in kilograms per day except discharge, which is in cubic meters per second]

Date 1990	Sampling site	Discharge	Chloride	Sulfate	Nitrate as nitrogen	Bicarbonate
2-23	Cumberland River near Smithland, Ky.	2,170	--	--	3,000	17,800,000
2-24	Tennessee River near Calvert City, Ky.	6,570	--	--	5,000	31,500,000
2-25	Mississippi River near Cache, Ill.	4,240	12,400,000	24,700,000	1,100,000	68,300,000
2-28	Wabash River near New Haven, Ill.	2,340	--	--	2,000	29,900,000
3-01	Ohio River at Uniontown, Ky.	6,620	7,400,000	27,000,000	1,100,000	36,700,000
3-03	Ohio River at Olmsted, Ill.	16,100	14,300,000	50,000,000	2,600,000	118,000,000
3-04	Mississippi River below Hickman, Ky.	21,000	--	--	--	--
3-05	Mississippi River below Fulton, Tenn.	22,800	25,200,000	73,700,000	2,000,000	117,000,000
3-07	Mississippi River at Helena, Ark.	23,300	26,800,000	75,800,000	2,800,000	121,000,000
3-08	Mississippi River above Arkansas City, Ark.	33,200	54,200,000	94,100,000	3,400,000	160,000,000
3-10	Mississippi River below Vicksburg, Miss.	34,100	47,200,000	94,000,000	3,400,000	238,000,000
3-12	Mississippi River near St. Francisville, La.	26,300	34,700,000	72,500,000	2,000,000	206,000,000
3-14	Mississippi River below Belle Chasse, La.	26,700	40,900,000	72,300,000	2,700,000	207,000,000

Table 66.– Discharge and corresponding transport data for dissolved major anions in water samples collected from the Mississippi River and some of its tributaries during the May-June 1990 cruise

[--, not determined; All results are in kilograms per day except discharge, which is in cubic meters per second]

Date 1990	Sampling site	Discharge	Chloride	Sulfate	Nitrate as nitrogen	Bicarbonate
6-07	Illinois River at Valley City, Ill.	1,230	4,800,000	8,000,000	--	26,400,000
6-11	Mississippi River below Grafton, Ill.	5,040	8,700,000	16,000,000	2,500,000	70,700,000
6-13	Mississippi River at Thebes, Ill.	12,600	13,000,000	42,200,000	3,100,000	141,000,000
6-14	Ohio River at Olmsted, Ill.	9,550	6,900,000	24,900,000	1,300,000	80,900,000
6-18	Mississippi River below Memphis, Tenn.	20,800	20,100,000	67,200,000	3,900,000	215,000,000
6-20	Mississippi River below Arkansas City, Ark.	25,500	24,600,000	73,700,000	4,200,000	258,000,000
6-22	Yazoo River below Steele Bayou, Miss.	1,250	360,000	690,000	60,000	5,000,000
6-23	Mississippi River below Vicksburg, Miss.	27,300	26,500,000	75,000,000	4,200,000	274,000,000
6-25	Mississippi River near St. Francisville, La.	23,200	21,500,000	63,800,000	3,500,000	232,000,000
6-27	Mississippi River below Belle Chasse, La.	23,300	25,400,000	65,600,000	3,500,000	232,000,000

Table 67.-- Concentration data for dissolved trace elements in ultrafilter permeate from water samples collected from the Mississippi River and some of its tributaries during the July-August 1987 cruise

[<, less than detection limit; All results are in micrograms per liter, except iron and strontium which are in milligrams per liter]

Date 1987	Sampling site	Aluminum	Arsenic	Barium	Beryllium	Boron	Cadmium	Chromium
7-21	Mississippi River at Hartford, Ill.	57	3.1	71	<0.02	53	0.29	0.95
7-22	Mississippi River at St. Louis, Mo.	44	2.9	110	<0.02	48	7.8	3.2
7-23	Mississippi River at Chester, Ill.	26	3.7	110	0.042	78	2.6	2.2
7-26	Ohio River below Smithland Locks and Dam, Ill.-Ky.	15	2.2	56	0.046	94	0.75	1.1
7-27	Ohio River at Olmsted, Ill.	8.1	2	42	0.027	61	0.59	0.43
7-28	Mississippi River below Hickman, Ky.	14	3.3	93	0.031	81	0.89	0.69
7-30	Mississippi River at Helena, Ark.	10	3	79	0.037	69	0.51	0.51
7-31	White River at Mile 11.5, Ark.	2.9	1.2	38	0.18	15	0.37	1.2
8-01	Arkansas River at Mile 55.9, Ark.	3.8	6.4	120	0.19	90	0.51	1.3
8-02	Mississippi River above Arkansas City, Ark.	2.4	2.3	76	0.19	60	0.47	0.72
8-04	Mississippi River below Vicksburg, Miss.	2.2	3.2	73	0.2	69	0.46	8.2
8-06	Old River Outflow Channel near Knox Landing, La.	3.8	3.2	75	0.19	59	0.61	0.96
8-07	Mississippi River near St. Francisville, La.	4.6	3.1	76	0.18	60	1	0.74
8-09	Mississippi River below Belle Chasse, La.	9.1	3.8	76	0.2	66	0.58	0.83

Table 67.-- Concentration data for dissolved trace elements in ultrafilter permeate from water samples collected from the Mississippi River and some of its tributaries during the July-August 1987 cruise -- Continued

Date 1987	Sampling site	Cobalt	Copper	Iron	Lead	Lithium	Manganese	Molybdenum
7-21	Mississippi River at Hartford, Ill.	0.068	2.1	<0.005	0.49	6.8	3.8	2.9
7-22	Mississippi River at St. Louis, Mo.	<0.008	7.3	<0.005	1.6	12	2	3.1
7-23	Mississippi River at Chester, Ill.	0.028	3	<0.005	0.31	14	0.67	3.7
7-26	Ohio River below Smithland Locks and Dam, Ill.-Ky.	0.044	2.5	<0.005	0.56	5.7	0.75	4.3
7-27	Ohio River at Olmsted, Ill.	0.15	2.1	<0.005	0.68	3.6	0.24	3.5
7-28	Mississippi River below Hickman, Ky.	<0.008	2.7	<0.005	0.23	14	0.26	3.8
7-30	Mississippi River at Helena, Ark.	0.026	3	<0.005	0.29	9.2	0.48	3.4
7-31	White River at Mile 11.5, Ark.	0.14	1.2	<0.005	0.14	0.68	0.51	1.2
8-01	Arkansas River at Mile 55.9, Ark.	0.28	4.2	<0.005	0.25	10	0.91	1.9
8-02	Mississippi River above Arkansas City, Ark.	0.17	2.3	<0.005	2.4	9.5	0.84	3
8-04	Mississippi River below Vicksburg, Miss.	0.21	2.5	<0.005	0.29	9.2	1	3
8-06	Old River Outflow Channel near Knox Landing, La.	0.093	2.7	<0.005	0.21	8.7	0.82	3
8-07	Mississippi River near St. Francisville, La.	0.2	2.7	<0.005	0.15	8.8	0.84	3
8-09	Mississippi River below Belle Chasse, La.	0.27	3	<0.005	0.51	9.9	2	3.1

Table 67.-- Concentration data for dissolved trace elements in ultrafilter permeate from water samples collected from the Mississippi River and some of its tributaries during the July-August 1987 cruise -- Continued

Date 1987	Sampling site	Nickel	Strontium	Thallium	Uranium	Vanadium	Zinc
7-21	Mississippi River at Hartford, Ill.	<0.03	0.13	0.2	1.7	4.1	1.8
7-22	Mississippi River at St. Louis, Mo.	3.5	0.22	0.2	2.1	3.7	26
7-23	Mississippi River at Chester, Ill.	2.6	0.21	0.41	3.1	5.2	3.6
7-26	Ohio River below Smithland Locks and Dam, Ill.-Ky.	0.99	0.23	0.47	0.85	2.7	2.2
7-27	Ohio River at Olmsted, Ill.	2.5	0.16	0.45	0.61	2.1	2.1
7-28	Mississippi River below Hickman, Ky.	1.1	0.23	0.47	2.8	4.5	2.1
7-30	Mississippi River at Helena, Ark.	1.8	0.2	0.46	1.9	4.1	4
7-31	White River at Mile 11.5, Ark.	<0.03	0.04	<0.05	0.47	1.8	0.38
8-01	Arkansas River at Mile 55.9, Ark.	<0.03	0.5	<0.05	2.1	15	1.8
8-02	Mississippi River above Arkansas City, Ark.	<0.03	0.23	<0.05	2.5	<0.07	0.69
8-04	Mississippi River below Vicksburg, Miss.	<0.03	0.22	<0.05	3.3	4.8	2
8-06	Old River Outflow Channel near Knox Landing, La.	<0.03	0.23	0.055	1.5	4.7	1.2
8-07	Mississippi River near St. Francisville, La.	<0.03	0.23	<0.05	1.3	4.9	1.4
8-09	Mississippi River below Belle Chasse, La.	1.3	0.24	<0.05	0.93	7.4	2

Table 68.-- Concentration data for dissolved trace elements in ultrafilter permeate from water samples collected from the Mississippi River and some of its tributaries during the November-December 1987 cruise

[<, less than detection limit; All results are in micrograms per liter, except iron and strontium which are in milligrams per liter]

Date 1987	Sampling site	Aluminum	Arsenic	Barium	Beryllium	Boron	Cadmium	Chromium
11-29	Illinois River below Meredosia, Ill.	3.3	3.5	42	0.078	150	0.14	0.36
11-30	Mississippi River near Winfield, Mo.	2.5	1.3	43	0.057	35	<0.1	<0.2
12-02	Missouri River at St. Charles, Mo.	3	2	92	0.072	71	1	<0.2
12-03	Mississippi River at St. Louis, Mo.	2.9	1.7	70	0.064	55	<0.1	<0.2
12-05	Mississippi River at Thebes, Ill.	2.2	2	78	0.079	52	<0.1	<0.2
12-06	Ohio River at Olmsted, Ill.	0.68	0.75	38	<0.02	67	<0.1	0.9
12-07	Mississippi River below Hickman, Ky.	0.35	1.1	63	<0.02	45	<0.1	<0.2
12-08	Mississippi River at Fulton, Tenn.	<0.2	1.1	63	<0.02	60	<0.1	0.58
12-11	Mississippi River at Helena, Ark.	<0.2	0.87	51	<0.02	43	<0.1	<0.2
12-12	White River at Mile 11.5, Ark.	0.65	<0.6	38	<0.02	9.4	<0.1	<0.2
12-13	Mississippi River above Arkansas City, Ark.	0.3	1.9	72	<0.02	60	<0.1	4.4
12-14	Yazoo River at Mile 10, Miss.	5	1.1	35	0.074	17	0.19	0.36
12-15	Mississippi River below Vicksburg, Miss.	2.8	2	65	0.074	54	0.22	0.31
12-17	Old River Outflow Channel near Knox Landing, La.	1.9	2.1	68	0.071	54	0.22	0.29
12-18	Mississippi River near St. Francisville, La.	1.4	1.5	69	<0.02	51	<0.1	<0.2
12-20	Mississippi River below Belle Chasse, La.	4.4	1.9	70	<0.02	53	<0.1	<0.2

Table 68.-- Concentration data for dissolved trace elements in ultrafilter permeate from water samples collected from the Mississippi River and some of its tributaries during the November-December 1987 cruise -- Continued

Date 1987	Sampling site	Cobalt	Copper	Iron	Lead	Lithium	Manganese	Molybdenum
11-29	Illinois River below Meredosia, Ill.	2.7	2.3	0.0057	0.3	7.6	<0.06	5
11-30	Mississippi River near Winfield, Mo.	1.7	0.8	<0.005	0.17	4.6	<0.06	1.4
12-02	Missouri River at St. Charles, Mo.	1.8	4.5	<0.005	0.18	28	1.1	2.6
12-03	Mississippi River at St. Louis, Mo.	1.7	1.4	<0.005	0.35	15	<0.06	2.2
12-05	Mississippi River at Thebes, Ill.	1.8	1.4	<0.005	0.2	15	0.21	2.3
12-06	Ohio River at Olmsted, Ill.	0.61	<0.02	<0.005	<0.06	5.6	<0.06	3.6
12-07	Mississippi River below Hickman, Ky.	<0.008	0.57	<0.005	<0.06	10	<0.06	2.8
12-08	Mississippi River at Fulton, Tenn.	0.72	<0.02	<0.005	<0.06	10	<0.06	2.6
12-11	Mississippi River at Helena, Ark.	<0.008	0.19	<0.005	<0.06	7.8	<0.06	2
12-12	White River at Mile 11.5, Ark.	<0.008	<0.02	<0.005	<0.06	<0.03	<0.06	<0.09
12-13	Mississippi River above Arkansas City, Ark.	<0.008	2.3	<0.005	<0.06	9.5	<0.06	2.6
12-14	Yazoo River at Mile 10, Miss.	0.011	1.5	0.008	<0.06	0.87	25	0.26
12-15	Mississippi River below Vicksburg, Miss.	<0.008	1.6	<0.005	<0.06	9.9	0.33	2.5
12-17	Old River Outflow Channel near Knox Landing, La.	<0.008	1.5	<0.005	<0.06	9.6	0.38	2.5
12-18	Mississippi River near St. Francisville, La.	<0.008	1.1	0.019	<0.06	8.3	<0.06	2.5
12-20	Mississippi River below Belle Chasse, La.	<0.008	3.1	<0.005	<0.06	9.1	<0.06	2.2

Table 68.-- Concentration data for dissolved trace elements in ultrafilter permeate from water samples collected from the Mississippi River and some of its tributaries during the November-December 1987 cruise -- Continued

Date 1987	Sampling site	Nickel	Strontium	Thallium	Uranium	Vanadium	Zinc
11-29	Illinois River below Meredosia, Ill.	62	0.27	<0.05	0.95	6.2	5.5
11-30	Mississippi River near Winfield, Mo.	37	0.094	<0.05	0.98	2.2	2.1
12-02	Missouri River at St. Charles, Mo.	45	0.34	<0.05	3.2	3.2	4.5
12-03	Mississippi River at St. Louis, Mo.	41	0.22	<0.05	2.2	3	1.9
12-05	Mississippi River at Thebes, Ill.	44	0.24	<0.05	2	3.2	1.7
12-06	Ohio River at Olmsted, Ill.	33	0.2	<0.05	<0.06	2.1	0.87
12-07	Mississippi River below Hickman, Ky.	<0.03	0.22	<0.05	1.1	2.8	<0.08
12-08	Mississippi River at Fulton, Tenn.	37	0.22	<0.05	0.47	2.3	<0.08
12-11	Mississippi River at Helena, Ark.	<0.03	0.21	<0.05	0.78	2.3	<0.08
12-12	White River at Mile 11.5, Ark.	19	0.037	<0.05	<0.06	0.33	<0.08
12-13	Mississippi River above Arkansas City, Ark.	0.57	0.22	0.15	1.5	3.5	2
12-14	Yazoo River at Mile 10, Miss.	1.2	0.052	<0.05	<0.06	0.73	0.58
12-15	Mississippi River below Vicksburg, Miss.	1.2	0.22	<0.05	0.84	3.1	1.3
12-17	Old River Outflow Channel near Knox Landing, La.	<0.03	0.22	<0.05	0.99	3.2	0.84
12-18	Mississippi River near St. Francisville, La.	<0.03	0.2	0.15	1.4	3.1	1.4
12-20	Mississippi River below Belle Chasse, La.	<0.03	0.21	0.13	1.6	4.4	0.48

Table 69.-- Concentration data for dissolved trace elements in ultrafilter permeate from water samples collected from the Mississippi River and some of its tributaries during the May-June 1988 cruise

[<, less than detection limit; All results are in micrograms per liter, except iron and strontium which are in milligrams per liter]

Date 1988	Sampling site	Aluminum	Arsenic	Barium	Beryllium	Boron	Cadmium	Chromium
5-16	Illinois River below Meredosia, Ill.	2	3.9	62	0.13	110	0.98	3.9
5-17	Mississippi River near Winfield, Mo.	2.7	1.5	54	0.07	23	5.8	1.4
5-19	Missouri River at Hermann, Mo.	2.5	2.9	100	0.11	74	1.2	1.8
5-20	Mississippi River at St. Louis, Mo.	2.6	2.4	86	0.047	66	1.2	<0.2
5-22	Mississippi River at Thebes, Ill.	2.3	2.4	83	0.059	55	0.71	<0.2
5-23	Ohio River at Olmsted, Ill.	5.7	1.1	38	0.063	41	1.2	0.37
5-24	Mississippi River below Hickman, Ky.	7.7	2.2	61	0.6	51	1.2	1
5-26	Mississippi River at Fulton, Tenn.	2.3	2.1	64	0.57	49	1.5	1
5-28	Mississippi River at Helena, Ark.	2.7	2.2	65	0.58	49	1.4	1.2
5-29	White River at Mile 11.5, Ark.	3.4	1.1	36	0.61	10	0.78	1.5
5-29	Arkansas River at Mile 1.0, Ark.	4.2	1.8	57	0.36	42	0.83	0.6
5-30	Mississippi River above Arkansas City, Ark.	4.8	1.4	76	0.38	17	0.52	1.5
6-02	Mississippi River below Vicksburg, Miss.	4	1.8	60	0.4	46	0.77	1.7
6-04	Old River Outflow Channel near Knox Landing, La.	2.5	1.4	67	<0.02	47	0.38	2.3
6-05	Mississippi River near St. Francisville, La.	3.5	1.6	74	<0.02	45	0.25	1.5
6-07	Mississippi River below Belle Chasse, La.	14	1.7	72	<0.02	40	0.23	2.2

Table 69.-- Concentration data for dissolved trace elements in ultrafilter permeate from water samples collected from the Mississippi River and some of its tributaries during the May-June 1988 cruise -- Continued

Date 1988	Sampling site	Cobalt	Copper	Iron	Lead	Lithium	Manganese	Molybdenum
5-16	Illinois River below Meredosia, Ill.	0.43	2	<0.005	0.67	6.8	0.29	6.1
5-17	Mississippi River near Winfield, Mo.	0.19	1.3	<0.005	0.3	6.3	0.36	1.3
5-19	Missouri River at Hermann, Mo.	<0.008	1.8	<0.005	0.25	33	0.63	3.1
5-20	Mississippi River at St. Louis, Mo.	0.18	1.2	<0.005	<0.06	25	0.73	3.2
5-22	Mississippi River at Thebes, Ill.	<0.008	1.1	<0.005	<0.06	18	0.38	2.9
5-23	Ohio River at Olmsted, Ill.	<0.008	1.4	<0.005	0.12	4.7	0.44	2.8
5-24	Mississippi River below Hickman, Ky.	0.49	1.8	<0.005	0.081	12	1.2	2.5
5-26	Mississippi River at Fulton, Tenn.	0.39	1.7	<0.005	0.069	11	1.2	2.5
5-28	Mississippi River at Helena, Ark.	0.36	1.9	<0.005	0.12	11	1.4	2.5
5-29	White River at Mile 11.5, Ark.	0.37	0.77	<0.005	<0.06	0.91	1.1	0.92
5-29	Arkansas River at Mile 1.0, Ark.	<0.008	1.8	<0.005	0.5	9	0.48	2.3
5-30	Mississippi River above Arkansas City, Ark.	<0.008	1.3	<0.005	0.31	2.8	90	1.4
6-02	Mississippi River below Vicksburg, Miss.	<0.008	1.7	<0.005	0.75	9.5	0.35	2.4
6-04	Old River Outflow Channel near Knox Landing, La.	<0.008	1.1	<0.005	<0.06	10	<0.06	2.6
6-05	Mississippi River near St. Francisville, La.	<0.008	1	<0.005	<0.06	9.9	<0.06	2.7
6-07	Mississippi River below Belle Chasse, La.	<0.008	1.2	<0.005	<0.06	9.6	0.086	2.7

Table 69.-- Concentration data for dissolved trace elements in ultrafilter permeate from water samples collected from the Mississippi River and some of its tributaries during the May-June 1988 cruise -- Continued

Date 1988	Sampling site	Nickel	Strontium	Thallium	Uranium	Vanadium	Zinc
5-16	Illinois River below Meredosia, Ill.	13	0.2	<0.05	1.8	7.7	2
5-17	Mississippi River near Winfield, Mo.	3.3	0.096	<0.05	2.1	2.5	1.7
5-19	Missouri River at Hermann, Mo.	0.96	0.44	<0.05	5.1	4.2	1.4
5-20	Mississippi River at St. Louis, Mo.	2.2	0.3	0.31	4.1	4.1	<0.08
5-22	Mississippi River at Thebes, Ill.	<0.03	0.27	0.35	3.6	4	<0.08
5-23	Ohio River at Olmsted, Ill.	<0.03	0.19	0.38	0.97	2.2	0.9
5-24	Mississippi River below Hickman, Ky.	2	0.22	<0.05	2	3.1	1.2
5-26	Mississippi River at Fulton, Tenn.	0.47	0.22	<0.05	2.2	2.9	1.4
5-28	Mississippi River at Helena, Ark.	<0.03	0.22	<0.05	2.3	2.9	1.4
5-29	White River at Mile 11.5, Ark.	<0.03	0.042	<0.05	0.56	0.92	0.28
5-29	Arkansas River at Mile 1.0, Ark.	<0.03	0.21	0.13	2	2.5	1.9
5-30	Mississippi River above Arkansas City, Ark.	<0.03	0.12	0.1	0.62	1.5	0.34
6-02	Mississippi River below Vicksburg, Miss.	<0.03	0.22	0.14	2.1	2.7	1.1
6-04	Old River Outflow Channel near Knox Landing, La.	<0.03	0.22	<0.05	1.7	3.1	<0.08
6-05	Mississippi River near St. Francisville, La.	<0.03	0.21	<0.05	1.8	3.2	<0.08
6-07	Mississippi River below Belle Chasse, La.	<0.03	0.22	<0.05	1.9	4.3	<0.08

Table 70.-- Concentration data for dissolved trace elements in ultrafilter permeate from water samples collected from the Mississippi River and some of its tributaries during the March-April 1989 cruise

[<, less than detection limit; All results are in micrograms per liter, except iron and strontium which are in milligrams per liter]

Date 1989	Sampling site	Aluminum	Arsenic	Barium	Beryllium	Boron	Cadmium	Chromium
3-09	Illinois River at Hardin, Ill.	1.6	1.7	50	<0.02	130	1.3	0.67
3-10	Mississippi River near Winfield, Mo.	0.5	0.98	45	<0.02	36	<0.1	0.55
3-12	Missouri River at Hermann, Mo.	3.8	1.8	62	<0.02	45	0.81	<0.2
3-13	Mississippi River at St. Louis, Mo.	2.8	1.5	54	<0.02	58	<0.1	0.46
3-15	Mississippi River at Thebes, Ill.	2.5	1.5	58	<0.02	53	<0.1	<0.2
3-16	Ohio River at Olmsted, Ill.	5	<0.6	26	<0.02	14	0.22	<0.2
3-17	Mississippi River below Hickman, Ky.	7.6	<0.6	34	<0.02	22	<0.1	<0.2
3-19	Mississippi River below Fulton, Tenn.	7.2	<0.6	35	<0.02	24	0.12	<0.2
3-21	Mississippi River at Helena, Ark.	4.8	<0.6	39	<0.02	22	<0.1	<0.2
3-22	White River at Mile 11.5, Ark.	3.7	0.85	31	0.047	5.3	<0.1	<0.2
3-23	Arkansas River at Pendleton, Ark.	4	1	50	<0.02	25	0.12	<0.2
3-24	Mississippi River above Arkansas City, Ark.	4.8	1	43	<0.02	24	<0.1	<0.2
3-26	Yazoo River below Steele Bayou, Miss.	5.4	1.7	26	<0.02	12	<0.1	<0.2
3-27	Mississippi River below Vicksburg, Miss.	3.8	1.4	46	<0.02	24	<0.1	<0.2
3-29	Old River Outflow Channel near Knox Landing, La.	2.2	1.2	47	<0.02	21	<0.1	<0.2
3-30	Mississippi River near St. Francisville, La.	2	0.84	48	<0.02	20	<0.1	<0.2
4-01	Mississippi River below Belle Chasse, La.	2.5	1	50	<0.02	22	<0.1	<0.2

Table 70.-- Concentration data for dissolved trace elements in ultrafilter permeate from water samples collected from the Mississippi River and some of its tributaries during the March-April 1989 cruise -- Continued

Date 1989	Sampling site	Cobalt	Copper	Iron	Lead	Lithium	Manganese	Molybdenum
3-09	Illinois River at Hardin, Ill.	0.75	2.3	<0.005	0.39	6.6	19	6.1
3-10	Mississippi River near Winfield, Mo.	0.45	1.3	<0.005	0.11	3.1	2.4	1.4
3-12	Missouri River at Hermann, Mo.	0.31	1.3	<0.005	<0.06	13	4.2	1.5
3-13	Mississippi River at St. Louis, Mo.	0.48	1.4	<0.005	0.18	7.5	2.5	2.5
3-15	Mississippi River at Thebes, Ill.	0.42	1.2	<0.005	<0.06	7.7	1.5	2
3-16	Ohio River at Olmsted, Ill.	0.2	0.52	0.0072	<0.06	1.6	3.6	0.64
3-17	Mississippi River below Hickman, Ky.	0.23	2	<0.005	<0.06	2.6	1.7	0.91
3-19	Mississippi River below Fulton, Tenn.	0.24	1.1	<0.005	<0.06	2.6	0.44	0.99
3-21	Mississippi River at Helena, Ark.	0.21	0.88	0.0051	<0.06	2.3	0.48	0.94
3-22	White River at Mile 11.5, Ark.	0.13	0.41	0.0086	<0.06	0.24	3.8	0.22
3-23	Arkansas River at Pendleton, Ark.	0.13	0.54	0.0098	<0.06	2.2	2.6	0.5
3-24	Mississippi River above Arkansas City, Ark.	0.18	0.47	<0.005	<0.06	2.6	0.6	0.97
3-26	Yazoo River below Steele Bayou, Miss.	0.031	0.7	0.017	<0.06	0.82	12	0.21
3-27	Mississippi River below Vicksburg, Miss.	0.18	1	<0.005	<0.06	3.1	0.63	1.1
3-29	Old River Outflow Channel near Knox Landing, La.	0.16	1.2	0.0062	<0.06	2.8	3.1	0.94
3-30	Mississippi River near St. Francisville, La.	0.12	0.9	<0.005	<0.06	2.8	1.7	1
4-01	Mississippi River below Belle Chasse, La.	0.1	0.89	<0.005	<0.06	2.8	3	0.94

Table 70.-- Concentration data for dissolved trace elements in ultrafilter permeate from water samples collected from the Mississippi River and some of its tributaries during the March-April 1989 cruise -- Continued

Date 1989	Sampling site	Nickel	Strontium	Thallium	Uranium	Vanadium	Zinc
3-09	Illinois River at Hardin, Ill.	18	0.27	<0.05	1.7	1.4	9.2
3-10	Mississippi River near Winfield, Mo.	8.6	0.093	<0.05	0.78	0.56	2
3-12	Missouri River at Hermann, Mo.	6.9	0.24	<0.05	3.2	0.93	1.6
3-13	Mississippi River at St. Louis, Mo.	9.6	0.19	<0.05	1.8	0.99	2.9
3-15	Mississippi River at Thebes, Ill.	8.3	0.19	<0.05	1.9	1	2.6
3-16	Ohio River at Olmsted, Ill.	4.4	0.1	<0.05	0.23	0.3	0.6
3-17	Mississippi River below Hickman, Ky.	5.1	0.12	<0.05	0.49	0.36	0.44
3-19	Mississippi River below Fulton, Tenn.	5.4	0.12	<0.05	0.47	0.45	0.44
3-21	Mississippi River at Helena, Ark.	4.8	0.12	<0.05	0.43	0.44	0.35
3-22	White River at Mile 11.5, Ark.	2.7	0.027	<0.05	<0.06	0.3	0.46
3-23	Arkansas River at Pendleton, Ark.	3.8	0.17	<0.05	0.56	0.39	0.78
3-24	Mississippi River above Arkansas City, Ark.	5.3	0.12	<0.05	0.49	0.45	2.6
3-26	Yazoo River below Steele Bayou, Miss.	2.2	0.036	<0.05	<0.06	0.39	0.47
3-27	Mississippi River below Vicksburg, Miss.	5.3	0.12	<0.05	0.63	0.75	1.5
3-29	Old River Outflow Channel near Knox Landing, La.	5	0.12	<0.05	0.72	0.64	1.1
3-30	Mississippi River near St. Francisville, La.	5	0.12	<0.05	0.75	0.6	2.7
4-01	Mississippi River below Belle Chasse, La.	5.1	0.12	<0.05	0.64	0.76	0.82

Table 71.-- Concentration data for dissolved trace elements in ultrafilter permeate from water samples collected from the Mississippi River and some of its tributaries during the June 1989 cruise

[<, less than detection limit; All results are in micrograms per liter, except iron and strontium which are in milligrams per liter]

Date 1989	Sampling site	Aluminum	Arsenic	Barium	Beryllium	Boron	Cadmium	Chromium
6-04	Illinois River at Hardin, Ill.	7.2	2.9	65	0.038	150	0.34	0.42
6-05	Mississippi River near Winfield, Mo.	5.7	2.2	63	<0.02	45	<0.1	0.38
6-07	Missouri River at Hermann, Mo.	7.7	1.9	87	0.023	100	<0.1	0.26
6-08	Mississippi River at St. Louis, Mo.	6.7	2	74	<0.02	92	<0.1	0.25
6-10	Mississippi River at Thebes, Ill.	5.7	2.5	78	0.045	96	<0.1	0.28
6-11	Ohio River at Olmsted, Ill.	6.7	0.92	41	<0.02	32	<0.1	<0.2
6-12	Mississippi River below Hickman, Ky.	4.7	1.4	55	<0.02	47	<0.1	<0.2
6-14	Mississippi River at Fulton, Tenn.	8.6	1.4	53	<0.02	43	<0.1	<0.2
6-17	Mississippi River at Helena, Ark.	5.1	1.3	53	<0.02	38	<0.1	<0.2
6-18	White River at Mile 11.5, Ark.	610	1.3	43	<0.02	7.4	0.48	<0.2
6-20	Mississippi River above Arkansas City, Ark.	5.2	1.6	49	0.042	32	<0.1	<0.2
6-22	Yazoo River below Steele Bayou, Miss.	5	2	26	<0.02	15	<0.1	<0.2
6-23	Mississippi River below Vicksburg, Miss.	4	1.4	48	<0.02	32	<0.1	<0.2
6-25	Old River Outflow Channel near Knox Landing, La.	7	1.3	47	<0.02	31	0.85	<0.2
6-26	Mississippi River near St. Francisville, La.	3.6	1.5	49	<0.02	32	<0.1	<0.2
6-28	Mississippi River below Belle Chasse, La.	6	1.9	51	0.024	32	<0.1	<0.2

Table 71.-- Concentration data for dissolved trace elements in ultrafilter permeate from water samples collected from the Mississippi River and some of its tributaries during the June 1989 cruise -- Continued

Date 1989	Sampling site	Cobalt	Copper	Iron	Lead	Lithium	Manganese	Molybdenum
6-04	Illinois River at Hardin, Ill.	0.71	2.2	<0.005	<0.06	6.1	0.48	5.9
6-05	Mississippi River near Winfield, Mo.	0.41	1.4	<0.005	<0.06	4.8	0.46	1.7
6-07	Missouri River at Hermann, Mo.	0.32	1.5	<0.005	<0.06	30	0.26	3.3
6-08	Mississippi River at St. Louis, Mo.	0.42	1.5	<0.005	<0.06	17	0.43	3
6-10	Mississippi River at Thebes, Ill.	0.42	1.6	<0.005	<0.06	16	0.25	3.1
6-11	Ohio River at Olmsted, Ill.	0.1	1.3	<0.005	<0.06	2.2	0.19	2.1
6-12	Mississippi River below Hickman, Ky.	0.15	1.1	<0.005	<0.06	5.4	0.12	2.4
6-14	Mississippi River at Fulton, Tenn.	0.12	1.3	<0.005	0.074	5.1	0.13	2.2
6-17	Mississippi River at Helena, Ark.	0.076	1.5	<0.005	<0.06	4.1	0.2	2.1
6-18	White River at Mile 11.5, Ark.	0.11	0.92	0.67	0.51	0.53	11	0.38
6-20	Mississippi River above Arkansas City, Ark.	0.23	1.3	<0.005	0.076	3.4	0.31	1.8
6-22	Yazoo River below Steele Bayou, Miss.	0.056	2.1	0.011	<0.06	0.66	4.5	0.24
6-23	Mississippi River below Vicksburg, Miss.	0.21	1.5	<0.005	<0.06	3	0.42	1.7
6-25	Old River Outflow Channel near Knox Landing, La.	0.19	1.9	<0.005	0.091	3	0.79	1.8
6-26	Mississippi River near St. Francisville, La.	0.23	1.6	<0.005	<0.06	3	0.36	1.8
6-28	Mississippi River below Belle Chasse, La.	0.24	1.7	<0.005	<0.06	3.4	0.33	1.7

Table 71.-- Concentration data for dissolved trace elements in ultrafilter permeate from water samples collected from the Mississippi River and some of its tributaries during the June 1989 cruise -- Continued

Date 1989	Sampling site	Nickel	Strontium	Thallium	Uranium	Vanadium	Zinc
6-04	Illinois River at Hardin, Ill.	14	0.22	<0.05	1.7	3.2	4.1
6-05	Mississippi River near Winfield, Mo.	7.4	0.089	<0.05	1.5	2.3	2.5
6-07	Missouri River at Hermann, Mo.	7.8	0.4	<0.05	3.8	2.4	3
6-08	Mississippi River at St. Louis, Mo.	8.4	0.23	0.061	2.4	2.6	1.9
6-10	Mississippi River at Thebes, Ill.	8.6	0.22	0.073	2.3	2.7	1.6
6-11	Ohio River at Olmsted, Ill.	5.3	0.16	<0.05	0.49	0.6	1.5
6-12	Mississippi River below Hickman, Ky.	5.9	0.18	<0.05	0.96	1.2	0.96
6-14	Mississippi River at Fulton, Tenn.	5.9	0.18	<0.05	0.95	1.1	1.5
6-17	Mississippi River at Helena, Ark.	5.1	0.19	<0.05	0.72	1.1	0.97
6-18	White River at Mile 11.5, Ark.	3.9	0.043	<0.05	0.3	1.5	4
6-20	Mississippi River above Arkansas City, Ark.	5.2	0.16	0.058	0.76	1.1	1.8
6-22	Yazoo River below Steele Bayou, Miss.	2.4	0.03	<0.05	<0.06	0.94	1.2
6-23	Mississippi River below Vicksburg, Miss.	5.2	0.15	<0.05	0.59	1.1	0.99
6-25	Old River Outflow Channel near Knox Landing, La.	4.7	0.15	0.099	0.78	1.2	1.6
6-26	Mississippi River near St. Francisville, La.	5.1	0.14	<0.05	0.63	1.1	1.4
6-28	Mississippi River below Belle Chasse, La.	4.7	0.15	<0.05	0.72	1.2	2.2

Table 72.-- Concentration data for dissolved trace elements in ultrafilter permeate from water samples collected from the Mississippi River and some of its tributaries during the February-March 1990 cruise

[<, less than detection limit; All results are in micrograms per liter, except iron and strontium which are in milligrams per liter]

Date 1990	Sampling site	Aluminum	Arsenic	Barium	Beryllium	Boron	Cadmium	Chromium
2-23	Cumberland River near Smithland, Ky.	4.4	<0.6	23	<0.02	12	0.24	<0.2
2-24	Tennessee River near Calvert City, Ky.	3.4	<0.6	19	<0.02	7.4	<0.1	0.36
2-25	Mississippi River near Cache, Ill.	2.9	1.7	64	<0.02	67	<0.1	0.54
2-28	Wabash River near New Haven, Ill.	4	0.66	40	<0.02	33	<0.1	<0.2
3-01	Ohio River at Uniontown, Ky.	7	<0.6	32	0.068	22	0.32	0.86
3-03	Ohio River at Olmsted, Ill.	4.5	<0.6	27	<0.02	18	<0.1	<0.2
3-04	Mississippi River below Hickman, Ky.	3.9	<0.6	35	<0.02	24	<0.1	<0.2
3-05	Mississippi River below Fulton, Tenn.	4.2	<0.6	35	<0.02	23	<0.1	<0.2
3-07	Mississippi River at Helena, Ark.	4	1.3	40	<0.02	23	0.33	<0.2
3-08	Mississippi River above Arkansas City, Ark.	3.6	1	40	0.027	21	0.37	<0.2
3-10	Mississippi River below Vicksburg, Miss.	4.4	0.99	40	<0.02	20	0.21	<0.2
3-12	Mississippi River near St. Francisville, La.	4.2	1.1	42	<0.02	21	0.23	<0.2
3-14	Mississippi River below Belle Chasse, La.	3.5	1.1	43	0.031	18	0.33	<0.2

Table 72.-- Concentration data for dissolved trace elements in ultrafilter permeate from water samples collected from the Mississippi River and some of its tributaries during the February-March 1990 cruise -- Continued

Date 1990	Sampling site	Cobalt	Copper	Iron	Lead	Lithium	Manganese	Molybdenum
2-23	Cumberland River near Smithland, Ky.	0.28	1.4	<0.005	<0.06	0.77	1.4	0.85
2-24	Tennessee River near Calvert City, Ky.	0.18	1.2	0.0061	<0.06	0.49	0.83	0.26
2-25	Mississippi River near Cache, Ill.	0.52	1.6	<0.005	<0.06	9.1	1.1	2.4
2-28	Wabash River near New Haven, Ill.	0.48	1.6	0.013	<0.06	1.4	4.1	1.8
3-01	Ohio River at Uniontown, Ky.	0.33	1.7	0.0077	<0.06	2.6	7.8	1.8
3-03	Ohio River at Olmsted, Ill.	0.2	1.4	<0.005	0.063	1.5	3.6	1
3-04	Mississippi River below Hickman, Ky.	0.25	1.3	0.0084	0.068	2.5	3	1.2
3-05	Mississippi River below Fulton, Tenn.	0.19	1.5	0.0084	0.095	2.5	2	1.1
3-07	Mississippi River at Helena, Ark.	0.29	1.5	0.0089	<0.06	2.4	1.7	1.1
3-08	Mississippi River above Arkansas City, Ark.	0.25	2.4	0.0089	<0.06	2.2	1.7	1.1
3-10	Mississippi River below Vicksburg, Miss.	0.21	1.7	<0.005	<0.06	2	1.5	0.91
3-12	Mississippi River near St. Francisville, La.	0.25	1.6	<0.005	<0.06	2.1	2.2	0.94
3-14	Mississippi River below Belle Chasse, La.	0.22	1.5	0.0074	<0.06	1.9	8.3	1

Table 72.-- Concentration data for dissolved trace elements in ultrafilter permeate from water samples collected from the Mississippi River and some of its tributaries during the February-March 1990 cruise -- Continued

Date 1990	Sampling site	Nickel	Strontium	Thallium	Uranium	Vanadium	Zinc
2-23	Cumberland River near Smithland, Ky.	5.6	0.085	<0.05	0.15	0.58	1.6
2-24	Tennessee River near Calvert City, Ky.	3.2	0.039	<0.05	<0.06	0.54	1.2
2-25	Mississippi River near Cache, Ill.	9.9	0.17	<0.05	2	1.4	3
2-28	Wabash River near New Haven, Ill.	8.7	0.12	<0.05	0.87	0.51	1.2
3-01	Ohio River at Uniontown, Ky.	6.1	0.16	0.2	0.63	0.48	1.9
3-03	Ohio River at Olmsted, Ill.	5.4	0.1	<0.05	0.41	0.25	1.4
3-04	Mississippi River below Hickman, Ky.	5.5	0.12	<0.05	0.6	0.42	1.5
3-05	Mississippi River below Fulton, Tenn.	5.5	0.12	<0.05	0.63	0.45	1.1
3-07	Mississippi River at Helena, Ark.	5.9	0.13	<0.05	0.56	0.5	1.1
3-08	Mississippi River above Arkansas City, Ark.	5.1	0.1	<0.05	0.64	0.55	1.2
3-10	Mississippi River below Vicksburg, Miss.	4.6	0.11	<0.05	0.62	0.49	1.1
3-12	Mississippi River near St. Francisville, La.	5.1	0.1	<0.05	0.64	0.64	0.97
3-14	Mississippi River below Belle Chasse, La.	4.6	0.11	<0.05	0.62	0.84	1.4

Table 73.-- Concentration data for dissolved trace elements in ultrafilter permeate from water samples collected from the Mississippi River and some of its tributaries during the May-June 1990 cruise

[<, less than detection limit; All results are in micrograms per liter, except iron and strontium which are in milligrams per liter]

Date 1990	Sampling site	Aluminum	Arsenic	Barium	Beryllium	Boron	Cadmium	Chromium
6-07	Illinois River at Valley City, Ill.	4	0.8	64	0.065	86	0.72	<0.2
6-11	Mississippi River below Grafton, Ill.	6.1	0.95	77	0.027	38	<0.1	<0.2
6-13	Mississippi River at Thebes, Ill.	6.1	1.4	77	<0.02	38	<0.1	<0.2
6-14	Ohio River at Olmsted, Ill.	6.5	<0.6	32	<0.02	28	<0.1	<0.2
6-18	Mississippi River below Memphis, Tenn.	5.6	1.3	59	<0.02	35	0.28	<0.2
6-20	Mississippi River below Arkansas City, Ark.	5.5	0.87	58	<0.02	31	0.11	1.1
6-22	Yazoo River below Steele Bayou, Miss.	5	3.9	33	<0.02	30	0.17	<0.2
6-23	Mississippi River below Vicksburg, Miss.	4.5	1.1	55	<0.02	30	<0.1	<0.2
6-25	Mississippi River near St. Francisville, La.	4.3	0.89	57	<0.02	35	<0.1	<0.2
6-27	Mississippi River below Belle Chasse, La.	7.5	1.4	60	<0.02	35	<0.1	<0.2

Table 73.-- Concentration data for dissolved trace elements in ultrafilter permeate from water samples collected from the Mississippi River and some of its tributaries during the May-June 1990 cruise -- Continued

Date 1990	Sampling site	Cobalt	Copper	Iron	Lead	Lithium	Manganese	Molybdenum
6-07	Illinois River at Valley City, Ill.	0.6	3.2	<0.005	<0.06	4.5	0.93	3.6
6-11	Mississippi River below Grafton, Ill.	0.37	2.1	<0.005	<0.06	3.4	0.58	1.8
6-13	Mississippi River at Thebes, Ill.	0.29	1.9	<0.005	<0.06	4.6	0.33	1.8
6-14	Ohio River at Olmsted, Ill.	0.3	1.5	<0.005	<0.06	1.5	0.42	1.3
6-18	Mississippi River below Memphis, Tenn.	0.35	2.2	<0.005	<0.06	4	0.39	1.7
6-20	Mississippi River below Arkansas City, Ark.	0.27	1.8	<0.005	<0.06	3.4	0.26	1.6
6-22	Yazoo River below Steele Bayou, Miss.	0.15	3.4	<0.005	<0.06	1.6	69	0.58
6-23	Mississippi River below Vicksburg, Miss.	0.3	2	<0.005	<0.06	2.9	0.44	1.3
6-25	Mississippi River near St. Francisville, La.	0.23	1.9	<0.005	<0.06	3.1	0.51	1.6
6-27	Mississippi River below Belle Chasse, La.	0.48	2.3	<0.005	<0.06	3.6	0.59	1.4

Table 73.-- Concentration data for dissolved trace elements in ultrafilter permeate from water samples collected from the Mississippi River and some of its tributaries during the May-June 1990 cruise -- Continued

Date 1990	Sampling site	Nickel	Strontium	Thallium	Uranium	Vanadium	Zinc
6-07	Illinois River at Valley City, Ill.	14	0.2	<0.05	1.7	1.9	4.4
6-11	Mississippi River below Grafton, Ill.	8.2	0.13	<0.05	1.6	1.8	1.9
6-13	Mississippi River at Thebes, Ill.	7.1	0.15	<0.05	1.3	1.8	1.4
6-14	Ohio River at Olmsted, Ill.	5.8	0.12	<0.05	0.29	0.57	1.2
6-18	Mississippi River below Memphis, Tenn.	6.9	0.14	<0.05	0.74	1.3	2
6-20	Mississippi River below Arkansas City, Ark.	6.4	0.14	<0.05	0.81	1.3	1
6-22	Yazoo River below Steele Bayou, Miss.	4.7	0.055	<0.05	<0.06	1.1	0.47
6-23	Mississippi River below Vicksburg, Miss.	6.4	0.14	<0.05	0.62	1.3	2
6-25	Mississippi River near St. Francisville, La.	5.8	0.14	<0.05	0.68	1.5	0.99
6-27	Mississippi River below Belle Chasse, La.	6.7	0.14	<0.05	0.61	1.8	0.85

Table 74.– Concentration data for dissolved major elements in ultrafilter permeate from water samples collected from the Mississippi River and some of its tributaries during the July-August 1987 cruise

[All results are in milligrams per liter]

Date 1987	Sampling site	Calcium	Magnesium	Potassium	Sodium	Silicon (as SiO_2)
7-21	Mississippi River at Hartford, Ill.	42	19	3.4	15	4.5
7-22	Mississippi River at St. Louis, Mo.	44	15	4.9	24	7.5
7-23	Mississippi River at Chester, Ill.	44	15	4.8	23	7.7
7-26	Ohio River below Smithland Locks and Dam, Ill.-Ky.	46	13	3.7	17	4.7
7-27	Ohio River at Olmsted, Ill.	34	8.2	2.8	12	3.1
7-28	Mississippi River below Hickman, Ky.	47	14	4.5	24	6.3
7-30	Mississippi River at Helena, Ark.	42	12	3.9	19	6.5
7-31	White River at Mile 11.5, Ark.	34	14	1.5	3.8	4.4
8-01	Arkansas River at Mile 55.9, Ark.	55	15	5.1	100	0.5
8-02	Mississippi River above Arkansas City, Ark.	43	13	4.1	29	5.9
8-04	Mississippi River below Vicksburg, Miss.	43	13	4.1	26	6.1
8-06	Old River Outflow Channel near Knox Landing, La.	44	14	4.1	27	6.5
8-07	Mississippi River near St. Francisville, La.	44	14	4.1	27	6.6
8-09	Mississippi River below Belle Chasse, La.	43	14	5.9	37	6.7

Table 75.– Concentration data for dissolved major elements in ultrafilter permeate from water samples collected from the Mississippi River and some of its tributaries during the November-December 1987 cruise

[All results are in milligrams per liter]

Date 1987	Sampling site	Calcium	Magnesium	Potassium	Sodium	Silicon (as SiO_2)
11-29	Illinois River below Meredosia, Ill.	65	29	4.5	44	1.9
11-30	Mississippi River near Winfield, Mo.	41	21	2.7	12	0.13
12-02	Missouri River at St. Charles, Mo.	50	17	4.6	39	8.8
12-03	Mississippi River at St. Louis, Mo.	46	19	3.8	26	4.7
12-05	Mississippi River at Thebes, Ill.	48	20	4	28	5.1
12-06	Ohio River at Olmsted, Ill.	37	11	3.2	24	3.8
12-07	Mississippi River below Hickman, Ky.	44	16	3.6	26	4.6
12-08	Mississippi River at Fulton, Tenn.	44	16	3.6	27	4.8
12-11	Mississippi River at Helena, Ark.	43	16	3.5	25	4.8
12-12	White River at Mile 11.5, Ark.	23	9.2	2.4	3.8	7.4
12-13	Mississippi River above Arkansas City, Ark.	42	16	3.5	29	5.3
12-14	Yazoo River at Mile 10, Miss.	8.6	2.9	3.3	6	7.3
12-15	Mississippi River below Vicksburg, Miss.	42	15	3.5	28	5.2
12-17	Old River Outflow Channel near Knox Landing, La.	42	15	3.5	29	5.3
12-18	Mississippi River near St. Francisville, La.	40	14	3.5	27	5
12-20	Mississippi River below Belle Chasse, La.	40	14	3.6	37	5.2

Table 76.– Concentration data for dissolved major elements in ultrafilter permeate from water samples collected from the Mississippi River and some of its tributaries during the May-June 1988 cruise

[All results are in milligrams per liter]

Date 1988	Sampling site	Calcium	Magnesium	Potassium	Sodium	Silicon (as SiO_2)
5-16	Illinois River below Meredosia, Ill.	64	33	4	37	0.5
5-17	Mississippi River near Winfield, Mo.	35	21	3.3	11	0.066
5-19	Missouri River at Hermann, Mo.	59	20	7.3	50	8.7
5-20	Mississippi River at St. Louis, Mo.	51	21	4.9	35	5.2
5-22	Mississippi River at Thebes, Ill.	53	23	4.6	32	3.8
5-23	Ohio River at Olmsted, Ill.	36	12	3	17	0.32
5-24	Mississippi River below Hickman, Ky.	44	17	3.9	24	2.2
5-26	Mississippi River at Fulton, Tenn.	44	17	3.9	24	2
5-28	Mississippi River at Helena, Ark.	44	18	3.9	23	2.1
5-29	White River at Mile 11.5, Ark.	37	13	2.1	4	4.1
5-29	Arkansas River at Mile 1.0, Ark.	43	17	3.8	22	1.9
5-30	Mississippi River above Arkansas City, Ark.	26	8.2	3.4	13	11
6-02	Mississippi River below Vicksburg, Miss.	46	17	3.8	23	1.8
6-04	Old River Outflow Channel near Knox Landing, La.	46	17	3.8	23	1.9
6-05	Mississippi River near St. Francisville, La.	45	17	3.8	22	1.8
6-07	Mississippi River below Belle Chasse, La.	48	17	4.1	32	1.7

Table 77.– Concentration data for dissolved major elements in ultrafilter permeate from water samples collected from the Mississippi River and some of its tributaries during the March-April 1989 cruise

[All results are in milligrams per liter]

Date 1989	Sampling site	Calcium	Magnesium	Potassium	Sodium	Silicon (as SiO_2)
3-09	Illinois River at Hardin, Ill.	79	31	4	72	5
3-10	Mississippi River near Winfield, Mo.	50	21	3.3	18	4.6
3-12	Missouri River at Hermann, Mo.	42	16	3.4	30	8.7
3-13	Mississippi River at St. Louis, Mo.	52	20	3.8	36	5.4
3-15	Mississippi River at Thebes, Ill.	48	19	3.6	31	5.7
3-16	Ohio River at Olmsted, Ill.	26	6.1	1.6	7.2	5.3
3-17	Mississippi River below Hickman, Ky.	31	8.7	1.9	12	5.3
3-19	Mississippi River below Fulton, Tenn.	30	8.3	2.1	11	5
3-21	Mississippi River at Helena, Ark.	30	8.4	2.1	11	5.2
3-22	White River at Mile 11.5, Ark.	18	6.7	1.4	1.8	4.4
3-23	Arkansas River at Pendleton, Ark.	24	6.3	2	31	3.8
3-24	Mississippi River above Arkansas City, Ark.	32	9.3	2.2	14	5.5
3-26	Yazoo River below Steele Bayou, Miss.	7	2.2	2.3	3.2	5.2
3-27	Mississippi River below Vicksburg, Miss.	32	8.9	2.2	14	5.5
3-29	Old River Outflow Channel near Knox Landing, La.	32	8.8	2.2	13	5.5
3-30	Mississippi River near St. Francisville, La.	31	8.8	2.3	14	5.4
4-01	Mississippi River below Belle Chasse, La.	31	8.6	2.3	15	5.5

Table 78.-- Concentration data for dissolved major elements in ultrafilter permeate from water samples collected from the Mississippi River and some of its tributaries during the June 1989 cruise

[All results are in milligrams per liter]

Date 1989	Sampling site	Calcium	Magnesium	Potassium	Sodium	Silicon (as SiO_2)
6-04	Illinois River at Hardin, Ill.	70	33	4.3	41	3.3
6-05	Mississippi River near Winfield, Mo.	37	19	3.1	12	1.2
6-07	Missouri River at Hermann, Mo.	53	20	4.9	52	7.7
6-08	Mississippi River at St. Louis, Mo.	48	20	4	33	4.6
6-10	Mississippi River at Thebes, Ill.	48	20	3.9	32	4.2
6-11	Ohio River at Olmsted, Ill.	38	12	2.4	9.2	5.1
6-12	Mississippi River below Hickman, Ky.	41	15	3.2	18	4.7
6-14	Mississippi River at Fulton, Tenn.	41	14	3	17	4.9
6-17	Mississippi River at Helena, Ark.	43	15	3	16	6.4
6-18	White River at Mile 11.5, Ark.	28	14	1.8	3.3	10
6-20	Mississippi River above Arkansas City, Ark.	34	12	2.6	22	5.7
6-22	Yazoo River below Steele Bayou, Miss.	5.5	1.8	2.6	2.6	7
6-23	Mississippi River below Vicksburg, Miss.	33	9.7	2.6	20	5.6
6-25	Old River Outflow Channel near Knox Landing, La.	32	9.4	2.6	19	5.6
6-26	Mississippi River near St. Francisville, La.	30	8.8	2.5	18	5.3
6-28	Mississippi River below Belle Chasse, La.	32	9.4	2.5	22	5.3

Table 79.-- Concentration data for dissolved major elements in ultrafilter permeate from water samples collected from the Mississippi River and some of its tributaries during the February-March 1990 cruise

[All results are in milligrams per liter]

Date 1990	Sampling site	Calcium	Magnesium	Potassium	Sodium	Silicon (as SiO_2)
2-23	Cumberland River near Smithland, Ky.	31	4.3	1.4	3	5.2
2-24	Tennessee River near Calvert City, Ky.	14	2.4	1.4	3.1	4.6
2-25	Mississippi River near Cache, Ill.	44	20	4.4	25	6.9
2-28	Wabash River near New Haven, Ill.	48	17	3.2	8.4	7.8
3-01	Ohio River at Uniontown, Ky.	31	8.4	2.3	8.7	6.3
3-03	Ohio River at Olmsted, Ill.	27	7.2	2.1	6.5	5.9
3-04	Mississippi River below Hickman, Ky.	32	11	2.6	10	6.3
3-05	Mississippi River below Fulton, Tenn.	33	11	2.6	11	6.9
3-07	Mississippi River at Helena, Ark.	34	12	2.3	11	7.1
3-08	Mississippi River above Arkansas City, Ark.	25	8.1	2.4	9.8	5.6
3-10	Mississippi River below Vicksburg, Miss.	27	8.5	2.4	11	5.7
3-12	Mississippi River near St. Francisville, La.	26	8	2.4	10	5.6
3-14	Mississippi River below Belle Chasse, La.	26	8.2	2.5	12	5.9

Table 80.-- Concentration data for dissolved major elements in ultrafilter permeate from water samples collected from the Mississippi River and some of its tributaries during the May-June 1990 cruise

[All results are in milligrams per liter]

Date 1990	Sampling site	Calcium	Magnesium	Potassium	Sodium	Silicon
6-07	Illinois River at Valley City, Ill.	76	33	2.9	26	6.3
6-11	Mississippi River below Grafton, Ill.	51	19	3.4	12	6.5
6-13	Mississippi River at Thebes, Ill.	38	12	3.7	12	7.1
6-14	Ohio River at Olmsted, Ill.	33	8.1	2.6	7	5.4
6-18	Mississippi River below Memphis, Tenn.	36	11	3.1	11	6.4
6-20	Mississippi River below Arkansas City, Ark.	36	11	3.1	11	6.7
6-22	Yazoo River below Steele Bayou, Miss.	10	3.3	3.1	4.7	6.2
6-23	Mississippi River below Vicksburg, Miss.	35	9.9	3.2	10	6.7
6-25	Mississippi River near St. Francisville, La.	36	10	3.2	11	6.8
6-27	Mississippi River below Belle Chasse, La.	35	10	3.2	13	6.9

☆ U.S. GOVERNMENT PRINTING OFFICE: 1995 - 673-211 / 00063 REGION NO. 8