U.S. DEPARTMENT OF THE INTERIOR

U.S. GEOLOGICAL SURVEY

CORE DESCRIPTIONS AND PRELIMINARY GEOCHEMICAL DATA FOR THE AMOCO PRODUCTION COMPANY REBECCA K. BOUNDS #1 WELL, GREELEY COUNTY, KANSAS.

by

Walter E. Dean[1], Michael A. Arthur[2], Bradley B. Sageman[3], and Michael D. Lewan[4]

Open-File Report 95-209

This report is preliminary and has not been reviewed for conformity with U.S. Geological Survey editorial standards or with the North American Stratigraphic Code. Use of trade, product, or firm names in this report is for descriptive purposes only and does not imply endorsement by the U.S. Government.

[1] MS 939 Federal Center, Denver, CO 80225
[2] Department of Geosciences, Pennsylvania State University, University Park, PA 16802
[3] Department of Geological Sciences, Northwestern University, Evanston, IL 60201
[4] MS 977 Federal Center, Denver, CO 80225

1995

TABLE OF CONTENTS

Page

INTRODUCTION....3
Background....3
Amoco Bounds Core....3
METHODS AND RESULTS....14
Core Description....14
Carbon Analyses....18
Inorganic Geochemical Analyses....20
Carbon and Oxygen Isotope Analyses....29
Rock-Eval Pyrolysis....31
Amoco Geochemical Data....31
ACKNOWLEDGMENTS....34
REFERENCES CITED....34

ILLUSTRATIONS

Figure 1. Lithofacies map for the early Turonian of the Western Interior Seaway....4
Figure 2. Map showing locations of major basins and uplifts in Colorado and adjacent states....5
Figure 3. Tops of formations and members in the Bounds core....6
Figure 4. Lithologic log of the Bounds core....7-13
Figure 5. Visual core description form used for describing the Bounds core....15
Figure 6. Key for symbols used to describe the Bounds core....16-17
Figure 7. Plots of percent $CaCO_3$ and TOC versus depth for the Bounds core....19
Figure 8. Histograms of average and maximum percent difference between nine duplicate pairs of analyses of major and trace elements in the Bounds core....21
Figure 9. Scatter plots comparing measured concentrations of major elements by ICP and XRF in samples from the Bounds core....22
Figure 10. Plots of concentrations of major and trace elements versus depth for the Niobrara Formation in the Bounds core....23-25
Figure 11. Plots of concentrations of major and trace elements versus depth for the Bridge Creek Limestone Member of the Greenhorn Formation in the Bounds core....26-28
Figure 12. Plots of carbon and oxygen isotope ratios versus depth in samples from the Bridge Creek Limestone Member of the Greenhorn Formation in the Bounds core...30
Figure 13. Plots of Amoco geochemistry data versus depth for the Greenhorn Formation in the Bounds core....32-33

Appendix I. 1-m core descriptions....35-100
Appendix II. Carbonate and organic carbon data....
Appendix III. Inorganic geochemical data....
Appendix IV. Carbon and oxygen isotope data....
Appendix V. Rock-Eval pyrolysis data....
Appendix VI. Amoco geochemistry data ....

INTRODUCTION

Background

The Cretaceous Western Interior Seaway Continental Scientific Drilling Project (WISK-DP) began in 1991 as a collaborative, multidisciplinary study of middle to Upper Cretaceous marine strata in the Utah-Colorado-Kansas corridor of the Western Interior Seaway. The project presently involves about two dozen researchers from the USGS, Amoco Production Company, and seven academic institutions. Objectives of the first phase of WISK-DP were to drill three holes or groups of holes, one in western Kansas, one in eastern Colorado, and one in eastern Utah. These states span the Cretaceous Western Interior Seaway that extended from the Gulf of Mexico north to the Arctic Ocean during maximum marine transgressions. (Figure 1). The first phase of the project was to focus on the two most extensive transgressive episodes in the seaway during the middle Cretaceous that resulted in deposition of two important organic-carbon-rich pelagic limestone units, the Cenomanian-Turonian Greenhorn Formation and Santonian-Campanian Niobrara Formation. An interdisciplinary team of researchers from government, academia, and industry would conduct biostratigraphic studies, paleoecologic studies, inorganic, organic and stable isotopic geochemical studies, mineralogical investigations, and high-resolution geophysical logging. Cores would provide the unweathered samples and continuous smooth exposures required for these studies.

Information for the eastern end of the transect was obtained from a hole that was drilled in 1988 and continuously cored (with better than 90% recovery) by Amoco Production Company in western Kansas (Amoco Rebecca K. Bounds #1, Greeley County, Kansas; Figure 2). Cores for the western end of the transect were obtained in 1991 when the USGS drilled and continuously cored (with better than 98% recovery) three holes in the Kaiparowits Basin of south central Utah (Fig. 2). These three cores, USGS CT-1-91, USGS SMP-1-91 , and USGS Escalante #1 (Figure 2) are presently archived in the USGS Core Research Center (USGS-CRC) in Denver. The third hole (USGS Portland #1; Fig. 2), was drilled by the USGS with DOE funding and continuously cored (with essentially 100% recovery) in Cretaceous strata in the Cañon City Basin near Florence, Colorado. The Portland core is also archived in the USGS-CRC, Denver. The purpose of this report is to present core descriptions and some preliminary geochemical data for the Amoco Bounds core.

Amoco Bounds Core

The Amoco Production Company, Rebecca K. Bounds #1 well was drilled in March of 1988 in Section 17, T18S, R4 2W, Greeley County, Kansas, to a total depth (TD) of 2645 feet (806 meters). Ground level elevation was 3824 feet (1166 meters). The hole was continuously cored from a depth of 522 feet (159 meters) to TD using Amoco's slim-hole high-speed advanced drilling system (SHADS) also known as stratigraphic high-speed advanced drilling system (Walker and Millheim, 1989; Randolph and Jourdan, 1991; Scott and others, 1993). Coring began in the middle of the Smoky Hill Member (Santonian) of the Niobrara Formation (Figures 3 and 4) and bottomed in the Mississippian. In January, 1992, the Cretaceous part of the Bounds core (522 -1495 feet; 159-456 meters) was released by Amoco and shipped to the USGS-CRC in Denver. The core was slabbed at the USGS-CRC, and a 2-cm-thick slab of the core is archived there. The archived slabs are stored in 1-m-long boxes, 3 m per box. This report contains visual core descriptions (Appendix I) of the core slabs from the Niobrara Formation to the top of the Dakota Sandstone (522-1115 feet; 159-340 meters; Figures 3 and 4).

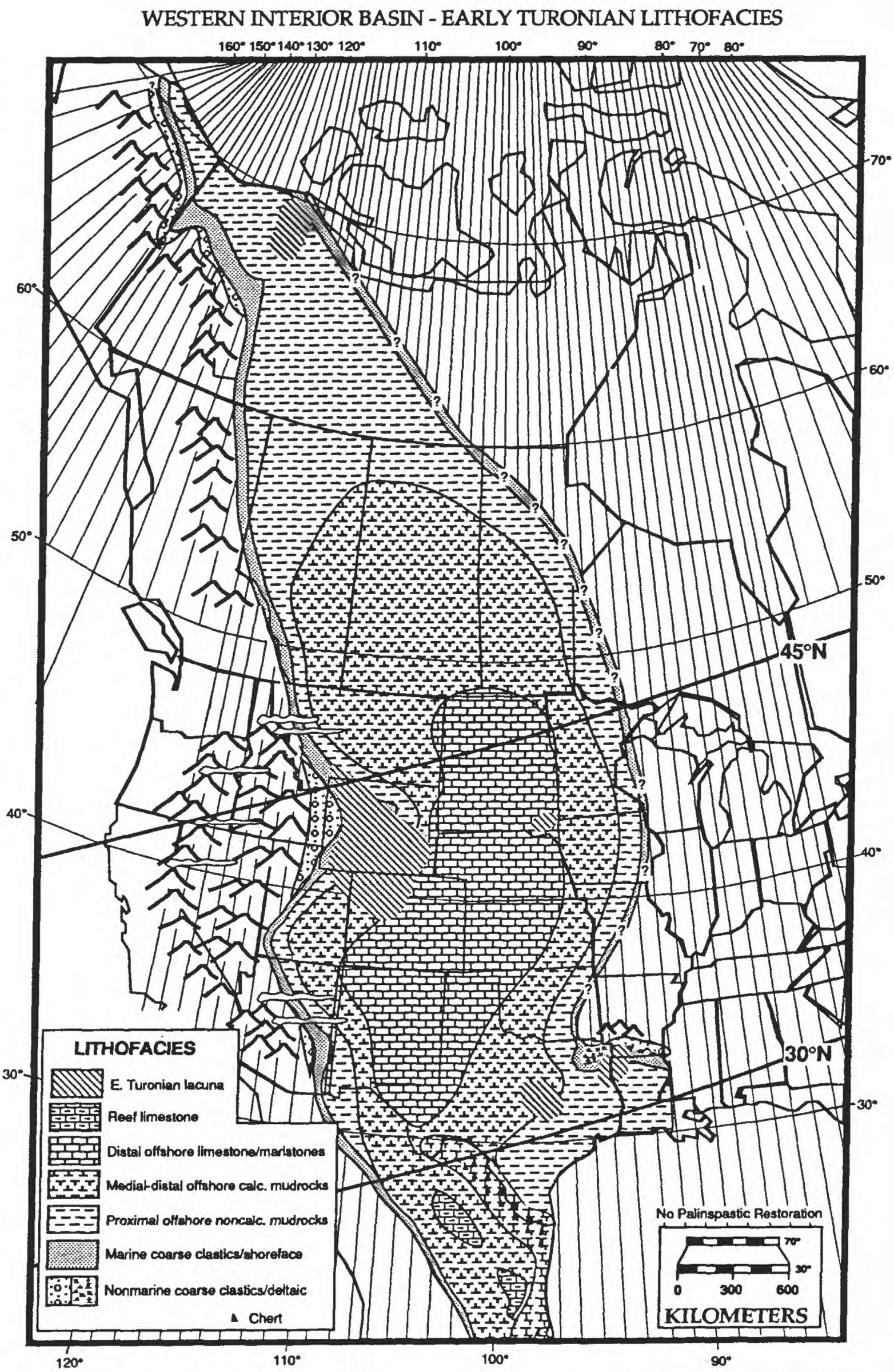

Figure 1. Lithofacies map for the early Turonian of the Western Interior Seaway. Modified from Arthur and Sageman, 1994.

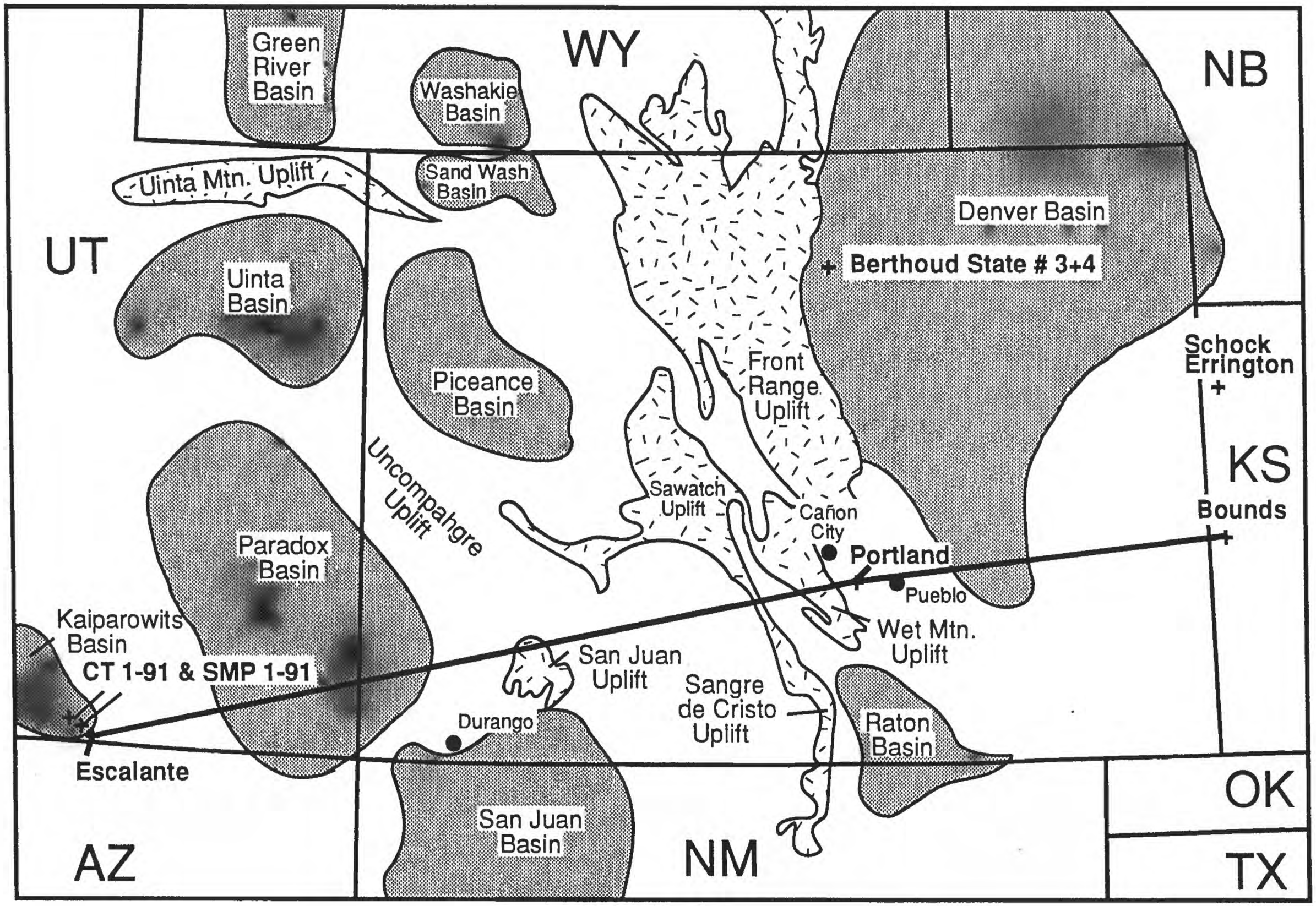

Figure 2. Map showing locations of major basins and uplifts in Colorado and adjacent states, and locations of existing cores that have been analyzed as part of the Cretaceous Western Interior Seaway Continental Scientific Drilling Project.

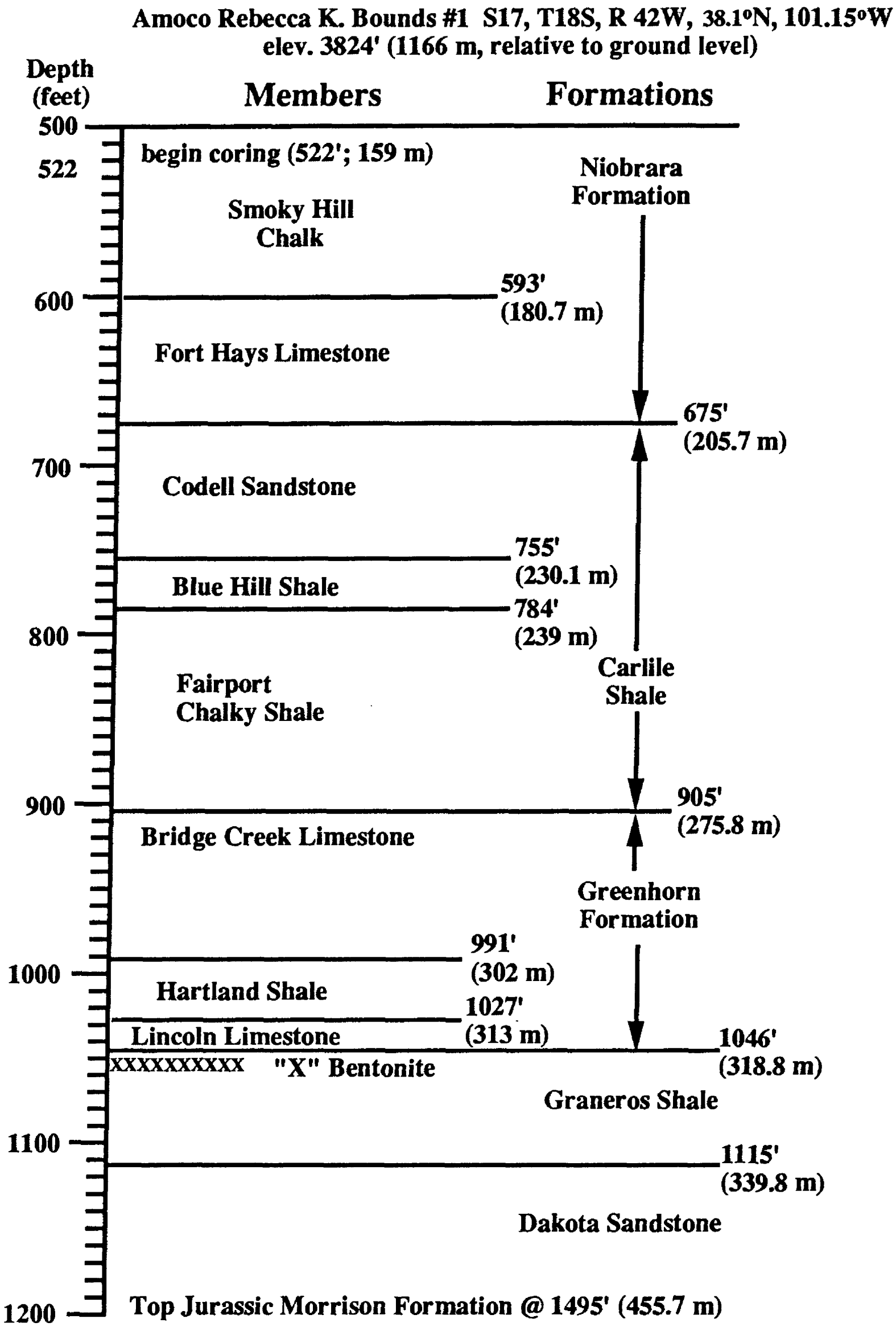

Figure 3. Tops of formations and members from the Niobrara Formation to the top of the Dakota Sandstone in the Bounds core.

CRETACEOUS WESTERN INTERIOR SEAWAY TRANSECT
Amoco #1 Rebecca K. Bounds

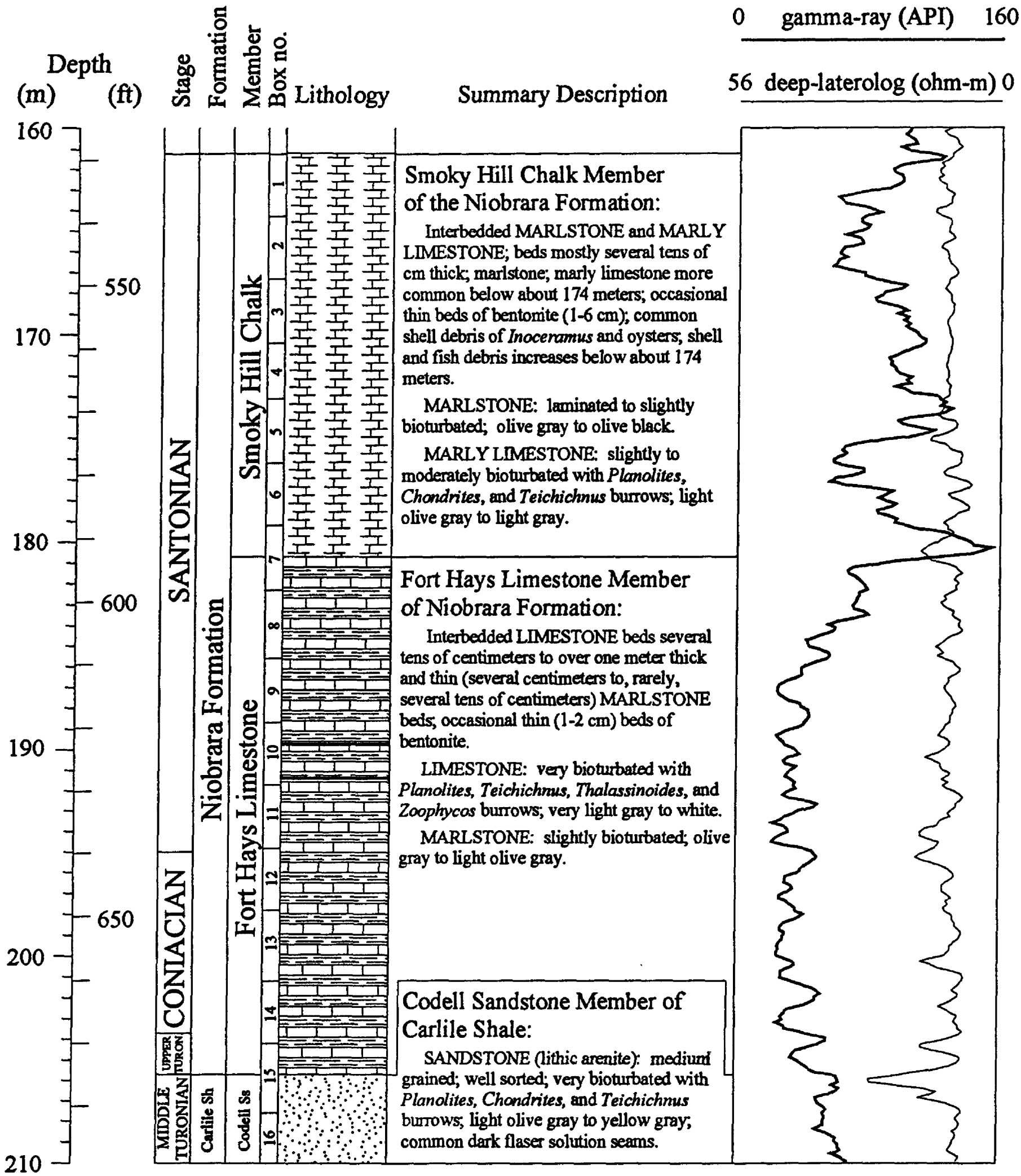

Figure 4. Lithologic log of the Bounds core (modified from Scott and others, 1993) with descriptions for each member or formation summarized from the 100-cm descriptions in Appendix I..

CRETACEOUS WESTERN INTERIOR SEAWAY TRANSECT
Amoco #1 Rebecca K. Bounds

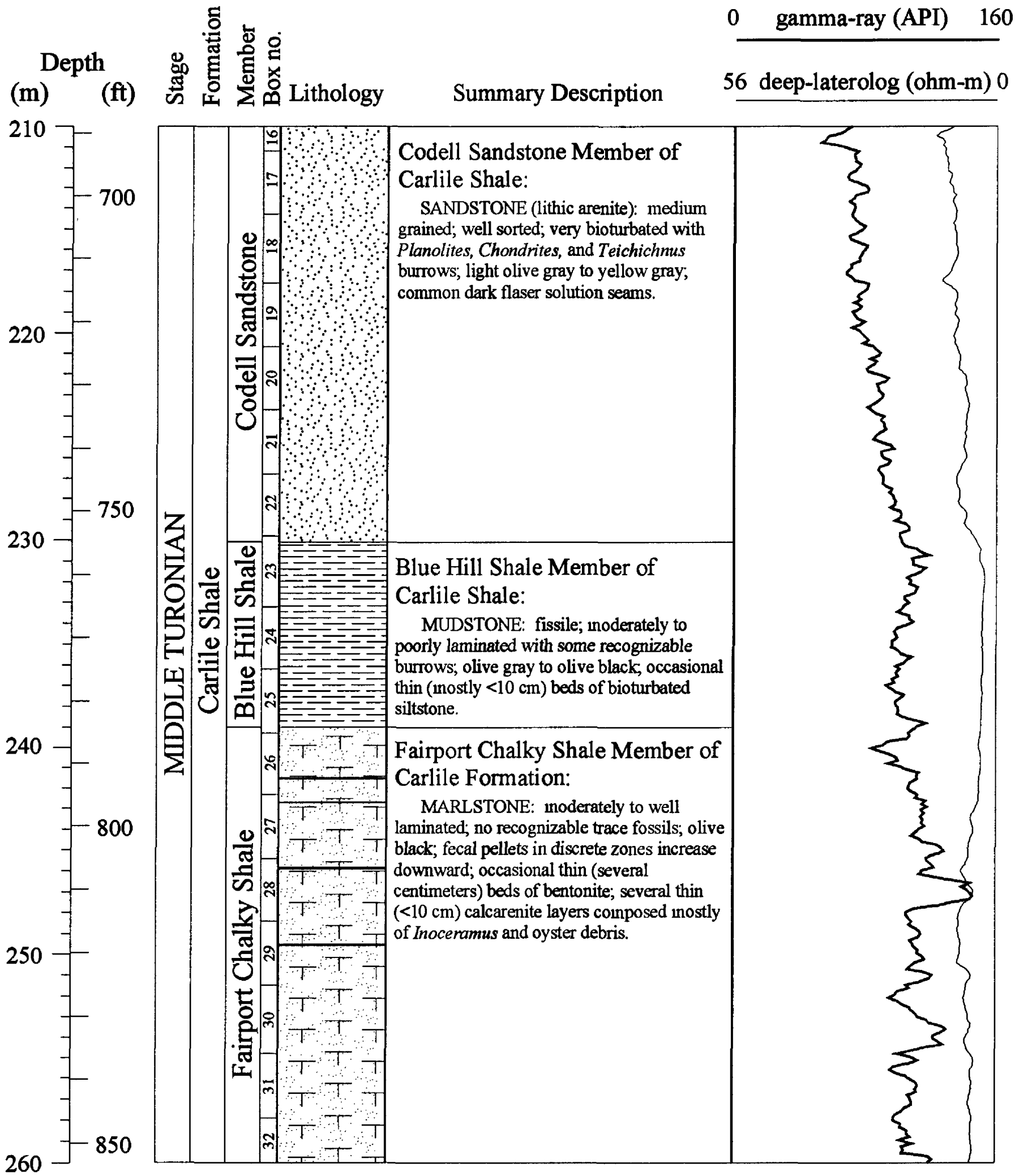

Figure 4 (cont.)

CRETACEOUS WESTERN INTERIOR SEAWAY TRANSECT
Amoco #1 Rebecca K. Bounds

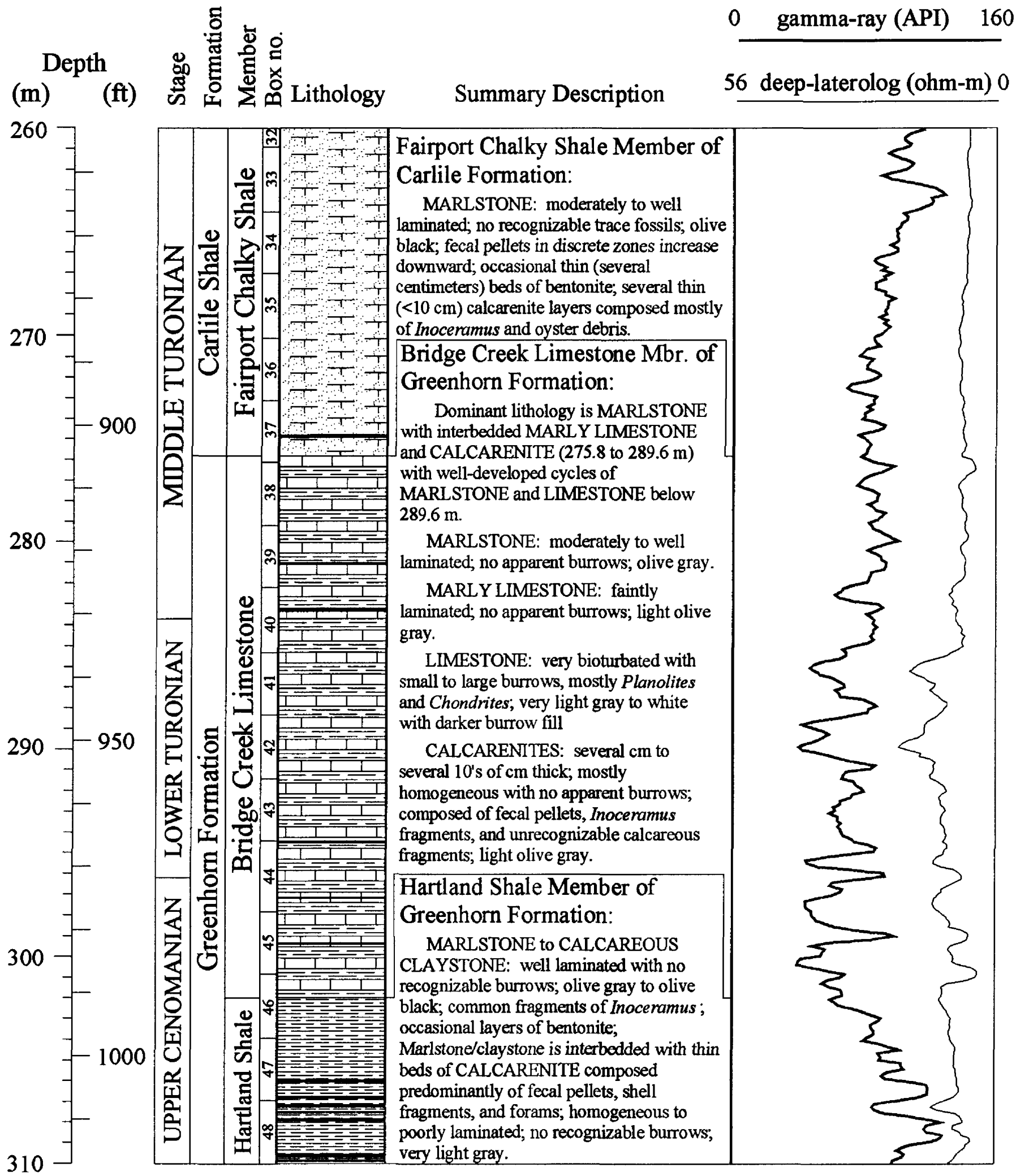

Figure 4 (cont.)

CRETACEOUS WESTERN INTERIOR SEAWAY TRANSECT
Amoco #1 Rebecca K. Bounds

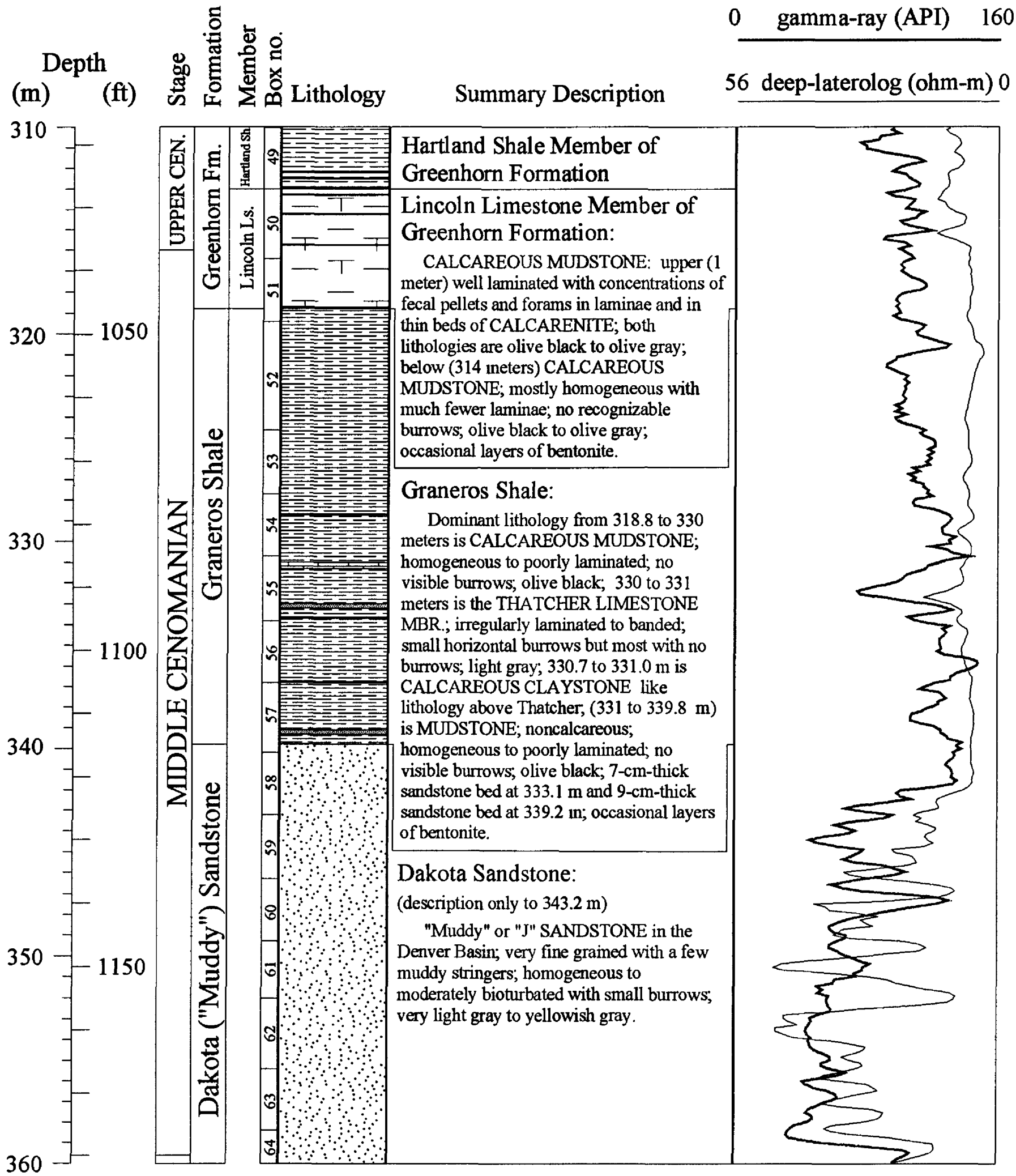

Figure 4 (cont.)

CRETACEOUS WESTERN INTERIOR SEAWAY TRANSECT
Amoco #1 Rebecca K. Bounds

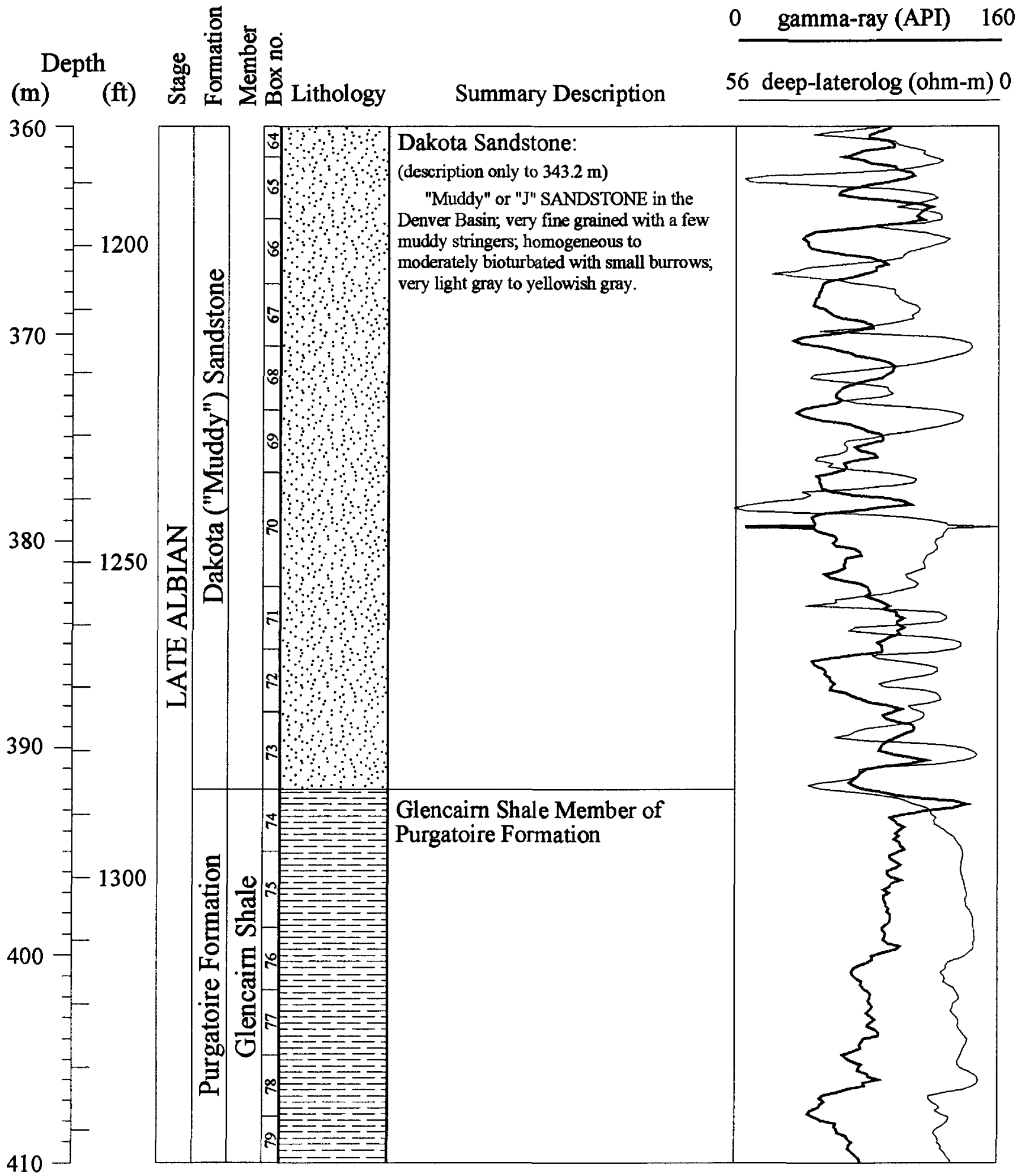

Figure 4 (cont.)

CRETACEOUS WESTERN INTERIOR SEAWAY TRANSECT
Amoco #1 Rebecca K. Bounds

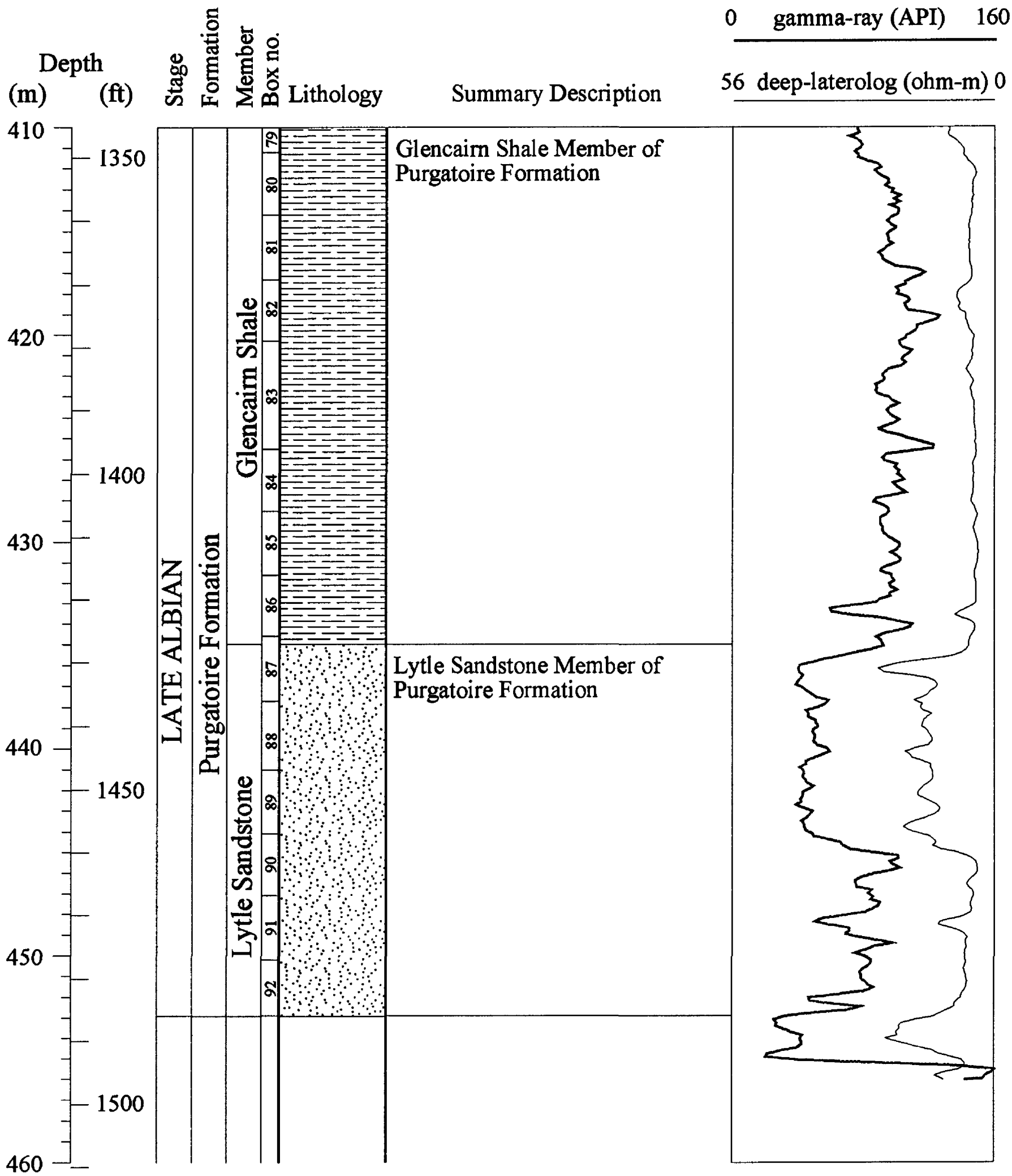

Figure 4 (cont.)

EXPLANATION

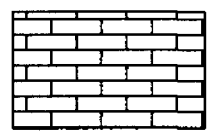
Limestone

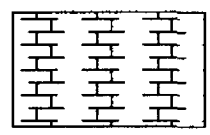
Marly Limestone

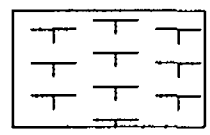
Marlstone

Calcareous Mudstone

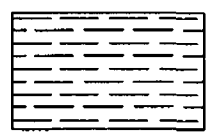
Shale or Mudstone

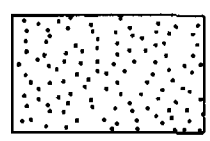
Sandstone

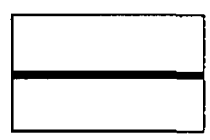
Bentonite

Figure 4 (cont.)

METHODS AND RESULTS

Core Descriptions

Figure 5 is a blank core description form that we used to describe the Bounds core. Figure 6 is a key for: 1. symbols used for filling in lithology, ichnofauna, macrofauna, microfauna, and accessory components in the "LITHOLOGY" column, 2. shading and numbers to depict ichnofauna in the bars in the "BIOT/sed.fab." column, 3. numbers to represent sedimentary fabric (mainly degree of bioturbation or lamination) depicted by width of the bars in the "BIOT/sed. fab." column, and 3. shading and number to represent rock color in the "COLOR" column. The scale at the left of the "LITHOLOGY" column is in centimeters for each meter of core. Because there are three meters of core in each archived box of core, each box number has an a, b, and c designation. The actual core footages, as marked on the core in the field, are given for each box, and the footages for each 1-m section appears on the left of the "LITHOLOGY" column. The original descriptions were done in pencil on blank forms (Figure 5). Each change in lithology based on color, texture, fabric, composition, abundance of biotic components, etc., was used to define a new lithologic unit. This resulted in a large number of lithologic units (553) but we decided that this provided the maximum amount of lithologic information. Each lithologic unit was described systematically in terms of thickness of the unit in centimeters, main lithology, sedimentary fabric (degree of bioturbation or lamination), type of ichnofauna, color (using the Geological Society of America Rock Color Chart), and nature of lower contact. This information was both written and coded on the form. The information was then transferred to digital versions of the forms on a MacIntosh computer using MacDraw graphic software. The completed 1-m lithologic descriptions are presented in Appendix I. The field-measured, drilled interval represented by the 553 lithologic units in the descriptions was at depths of 529.5 feet to 1126 feet (161.4 m to 343.2 m) for a total drilled interval of 596.5 feet (181.8 m). The cumulative thickness of the 553 lithologic units as measured in the slabbed core is 178,575 cm (178.6 m) which means that only 3.2 m of material is unaccounted for between what was measured in the field and what was measured for 553 lithologic units in the slabbed core. This is quite good agreement considering that there were several intervals of bagged rubble and missing core for which we had only a rough estimate of the stratigraphic thickness represented by those intervals. Also, the 553 lithologic units include 44 intervals marked "sample taken" in which a whole-core sample had been taken at Amoco and for which we had no indication of lithology or exact stratigraphic thickness represented by that sample. We suspect that many of those samples were bentonites. Many samples were taken from the Greenhorn Formation for geochemistry by Michael D. Lewan, then with Amoco and now at the USGS. We know that those samples were thin (1-2 cm) and taken from within lithologies so they were not counted as separate units. The Lewan samples are so indicated on the description forms. A summary description for each member or formation is included along with the lithologic log in Figure 4.

CORE: USGS #1 Portland

BOX #

BOX FOOTAGE

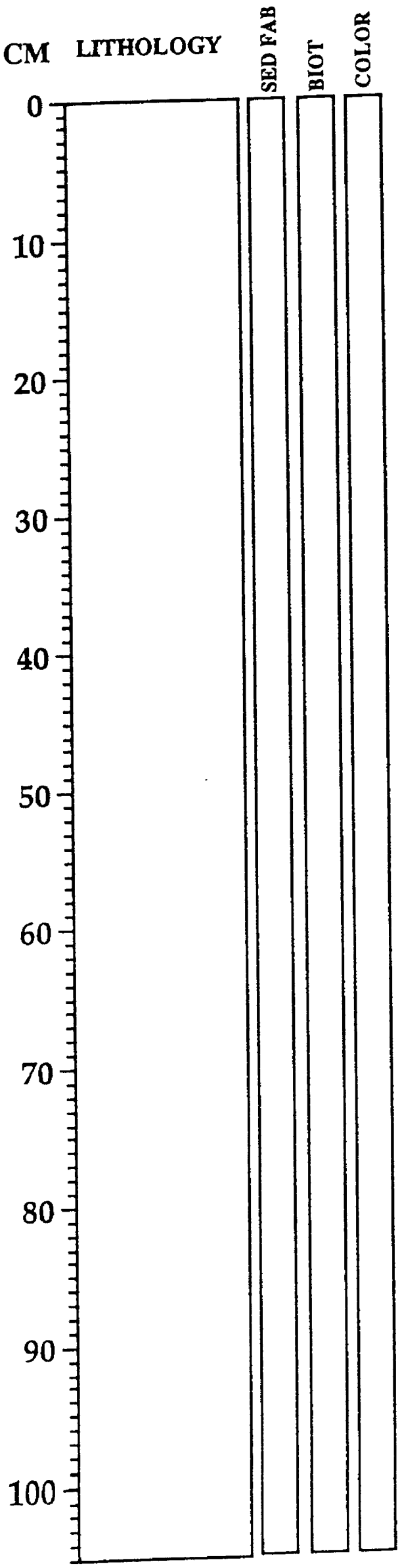

Figure 5. Blank visual core description form used for describing the Bounds core at 100-cm intervals.

KEY TO 100 CM CORE DESCRIPTION FORMS

SED FABRIC (width of left box)

0	1	2	3	4	5	6	7
homog-eneous	well lamin-ated	moder-ately lamin-ated	poorly lamin-ated	burr-owed	slightly bioturb-ated	moder-ately bioturb-ated	very bioturb-ated

ICHNOFAUNA (shading & No. in left box)

0	1	2	3	4	5	6
No Ichnotaxa	Microbioturbated	Small Pl/Ch	Large Pl/Ch	Pl/Ch/Teich	Pl/Ch/Teich/Thal	Pl/Teich/Thal/Sk

<u>Abbreviations</u>:
Pl = *Planolites*
Ch = *Chondrites*
Teich = *Teichniichnus*
Thal = *Thalassinoides*
Sk = *Skolithus*

COLOR (shading & No. in right box)

0	1	2	3	4	5	6
black N1	olive black 5y2/1	olive gray 5y4/1	light olive gray 5Y5/2	yellow gray 5Y7/2	very light gray N8	white N9

LITHOLOGIES

Limestone	Marly Limestone	Marlstone	Calcareous Shale	Shale	Mudstone	Sandstone

WESTERN INTERIOR SEAWAY
CONTINENTAL SCIENTIFIC DRILLING PROJECT

Figure 6. Key for symbols, shadings, and codes used to describe sedimentary fabrics, ichnofauna, macrofauna, microfauna, accessory components, color, and lithology.

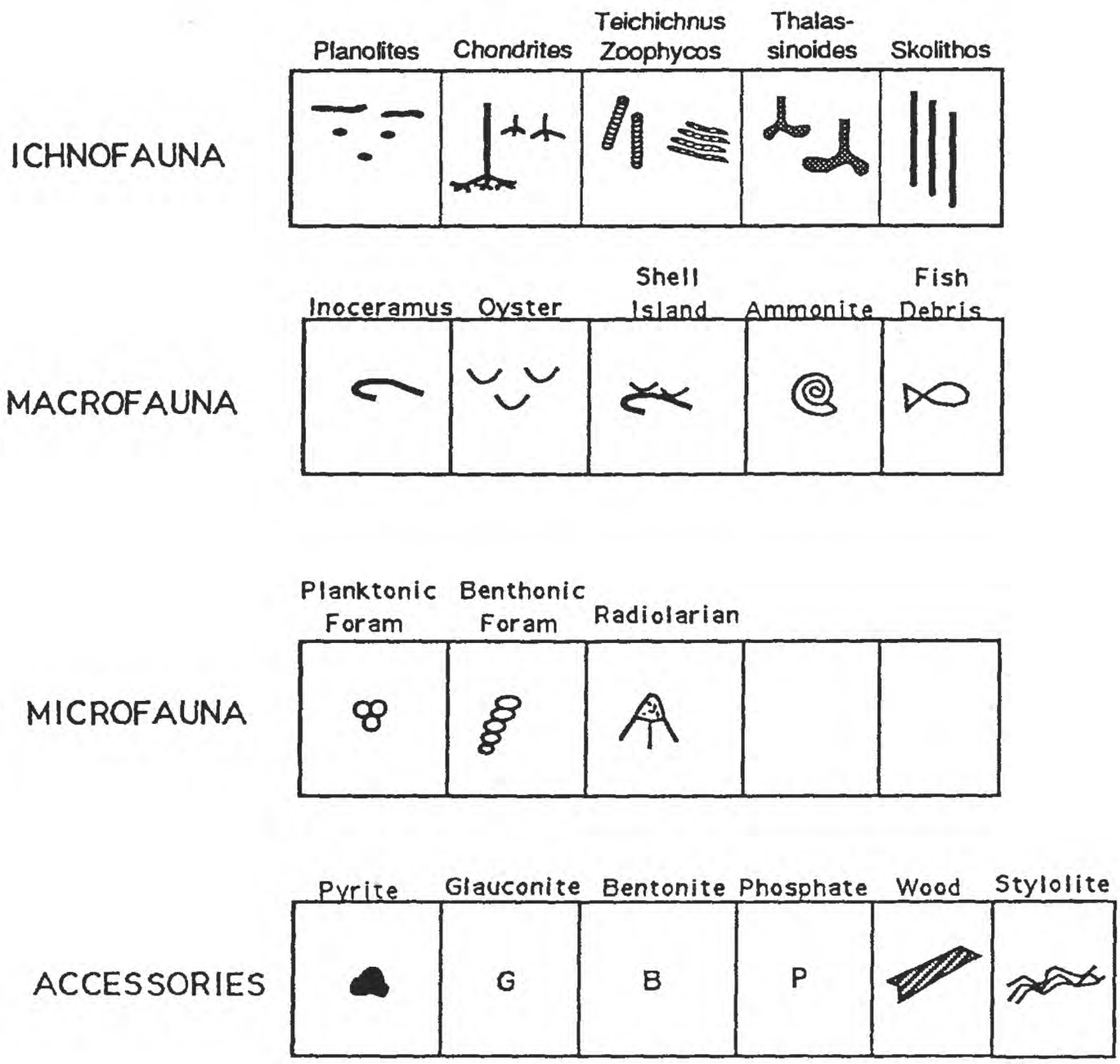

Figure 6 (cont.)

Carbon Analyses

Concentrations of total carbon and carbonate carbon were determined by coulometry (Engleman and, others, 1985) in ground splits of samples collected at about 10-cm intervals through the transition between the Smoky Hill Chalk and Fort Hays Limestone Members of the Niobara Formation, the upper 40 m of the Carlile Shale, and the Bridge Creek Limestone Member of the Greenhorn Formation. Carbonate in the untreated sample is reacted with perchloric acid to liberate CO_2, which is then titrated in a coulometer cell to measure carbonate carbon. Total carbon is measured by liberating CO_2 by combustion of an untreated sample and titrating the CO_2. Values of total organic carbon (TOC) were determined by difference between total carbon and carbonate carbon. Replicate analyses demonstrate the coulometer technique has a precision of better than ±1% for both carbonate and total carbon. Percent $CaCO_3$ was calculated by dividing percent carbonate carbon by 0.12, the fraction of carbon in $CaCO_3$. Results of the carbon analyses are presented in Appendix II and plotted versus depth in Figure 7.

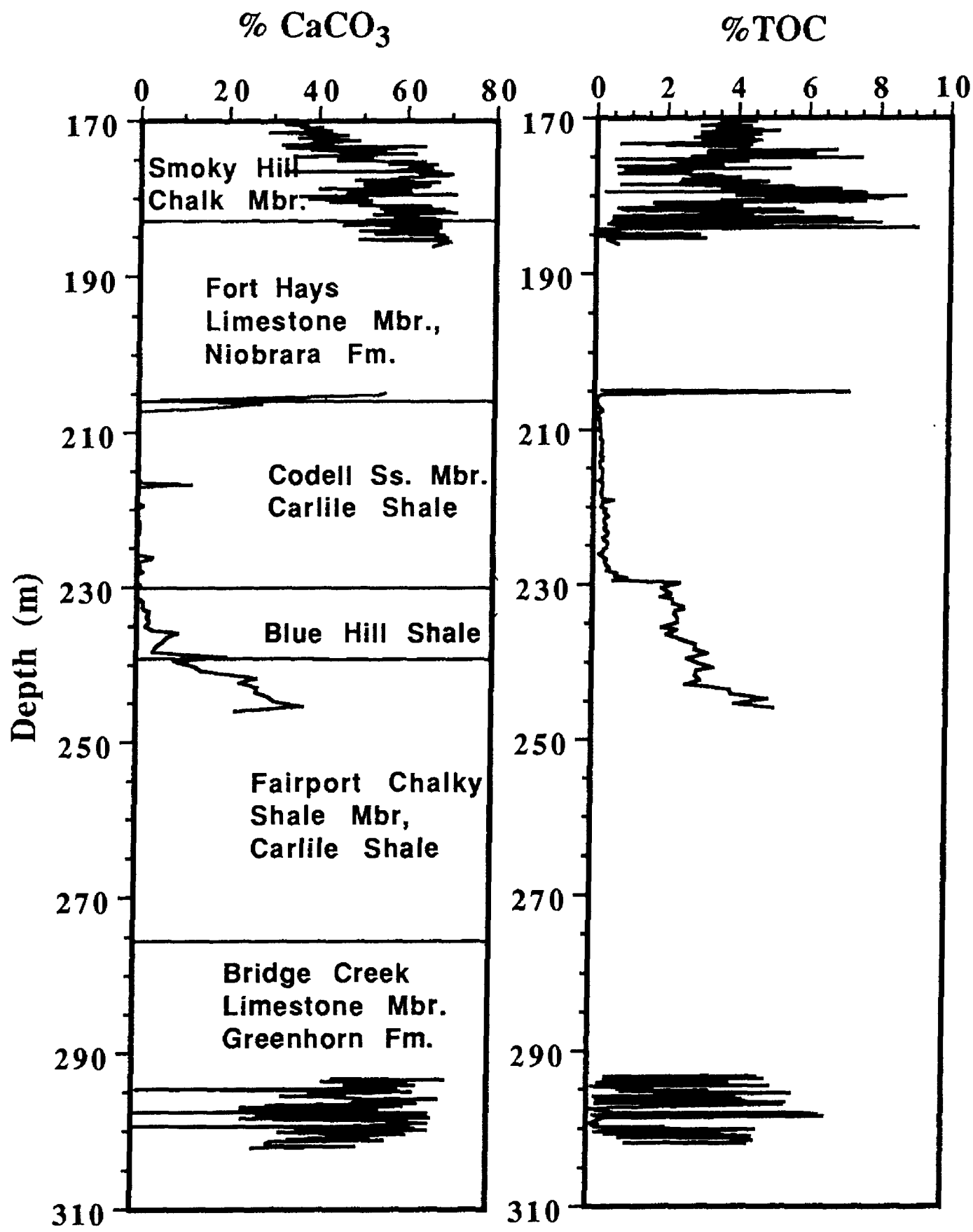

Figure 7. Plots of percent $CaCO_3$ and total organic carbon (TOC) versus depth in samples from the Niobrara Formation, Carlile Shale, and Bridge Creek Limestone Member of the Greenhorn Formation.

Inorganic Geochemical Analyses

Splits of the carbon samples from the Niobrara Formation and the Bridge Creek Limestone Member of the Greenhorn Formation were used to measure the concentrations of 10 major elements (Si, Al, Fe, Mg, Ca, Na, K, Ti, P, and Mn) by wavelength-dispersive X-ray fluorescence spectrometry (XRF; Baedecker, 1987). Concentrations of 30 major and trace elements (Al, Fe, Mg, Ca, Na, K, Ti, P, Mn, As, Ba, Cd, Ce, Co, Cr, Cu, Ga, La, Li, Mo, Nb, Nd, Ni, Sc, Sr, Th, V, Y, Yb, and Zn) were determined by inductively coupled, argon-plasma, emission spectrometry (ICP; Baedecker, 1987). For many samples (usually those with high concentrations of $CaCO_3$) concentrations of As, Cd, Mo, Nb, Nd, Pb, Sc, Th, and (or) Yb were below the limits of detection.

Estimates of the precisions of the XRF and ICP techniques were obtained by performing duplicate analyses on 9 samples. The percent difference between duplicates was calculated for each type of analysis (XRF and ICP). Histograms of average and maximum percent difference between duplicates are plotted in Figure 8. Scatter plots of element oxide concentrations determined by ICP versus element oxide concentrations determined by XRF are shown for each element in Figure 9. The histograms (Figure 8) and the scatter plots (Figure 9) show that agreement between the two methods is acceptable. Average differences in duplicate analyses for major elements by XRF and ICP and trace elements by ICP is generally <10% (Figure 8). The high values (<10%) for maximum percent difference usually are due to one or two samples, and often it was the same samples that had large differences for several elements.

Results of analyses of both the Niobrara and Bridge Creek samples are presented in Appendix III. Element concentrations are plotted versus depth for the Niobrara samples in Figure 10, and for the Bridge Creek samples in Figure 11.

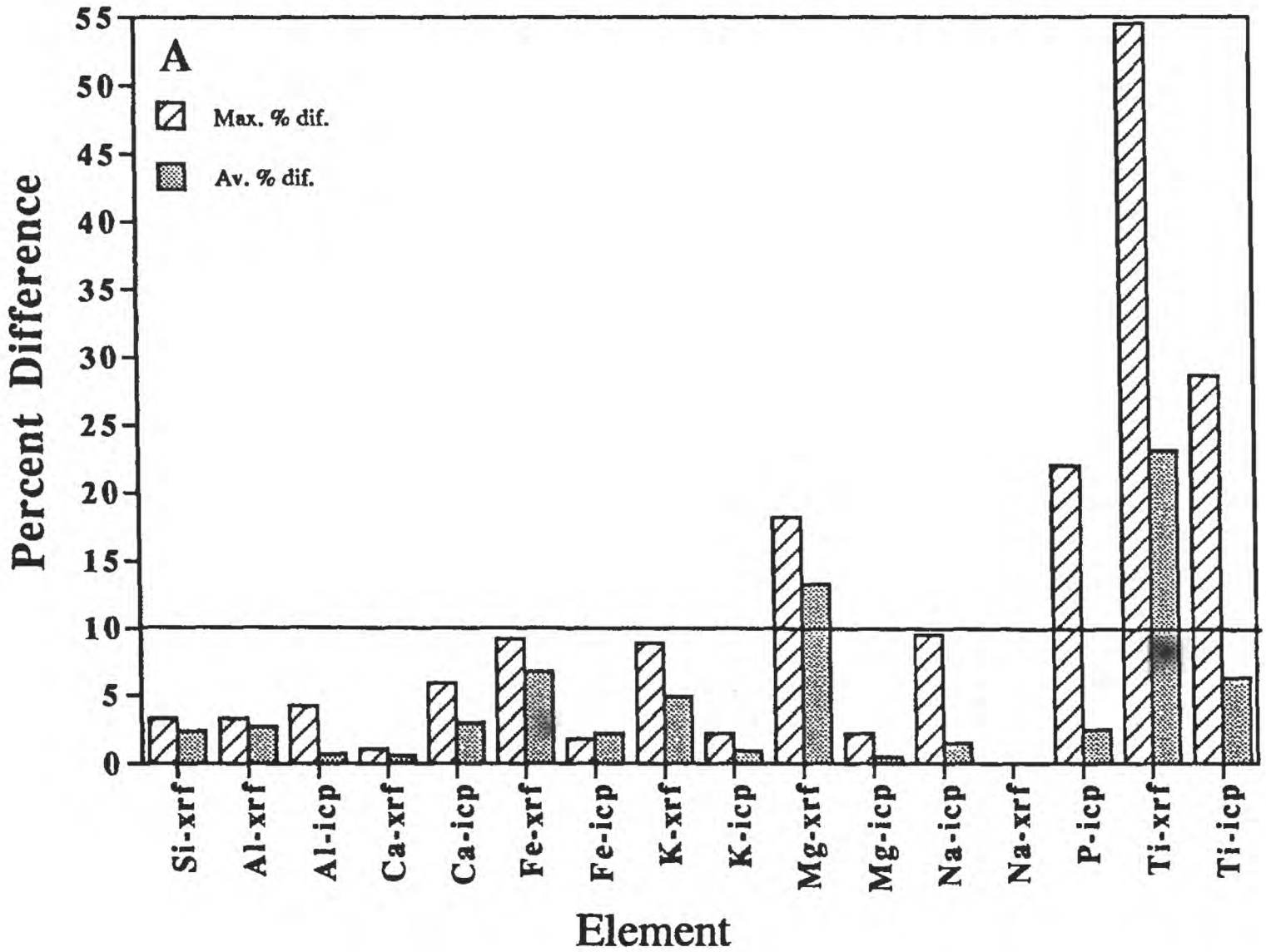

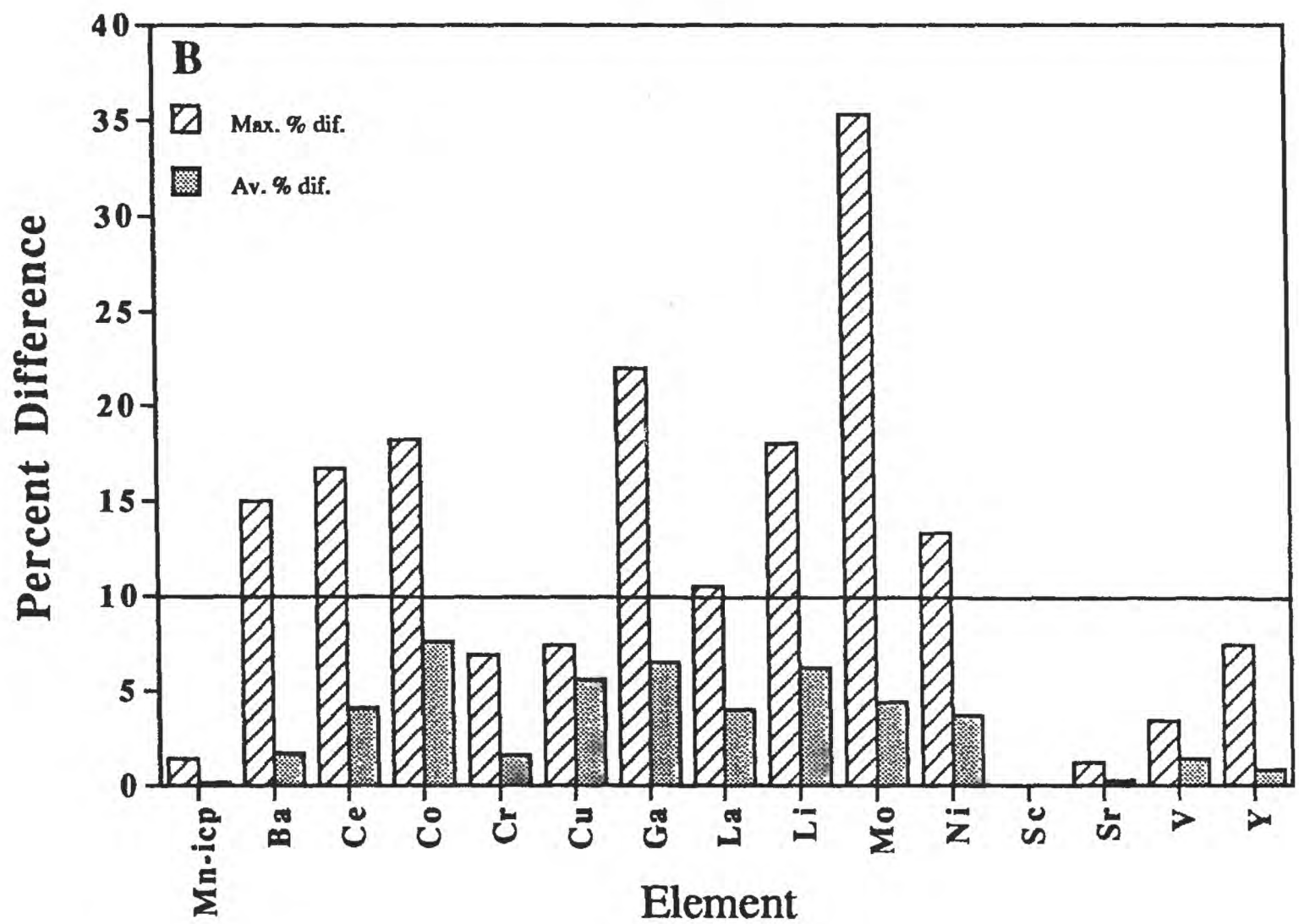

Figure 8. Histograms of average and maximum percent difference between nine duplicate pairs of analyses of (A) major elements by X-ray fluorescence (XRF) and inductively coupled, argon plasma emission spectrometry (ICP), and (B) trace elements by ICP in samples from the Niobrara Formation and the Bridge Creek Limestone Member of the Greenhorn Formation.

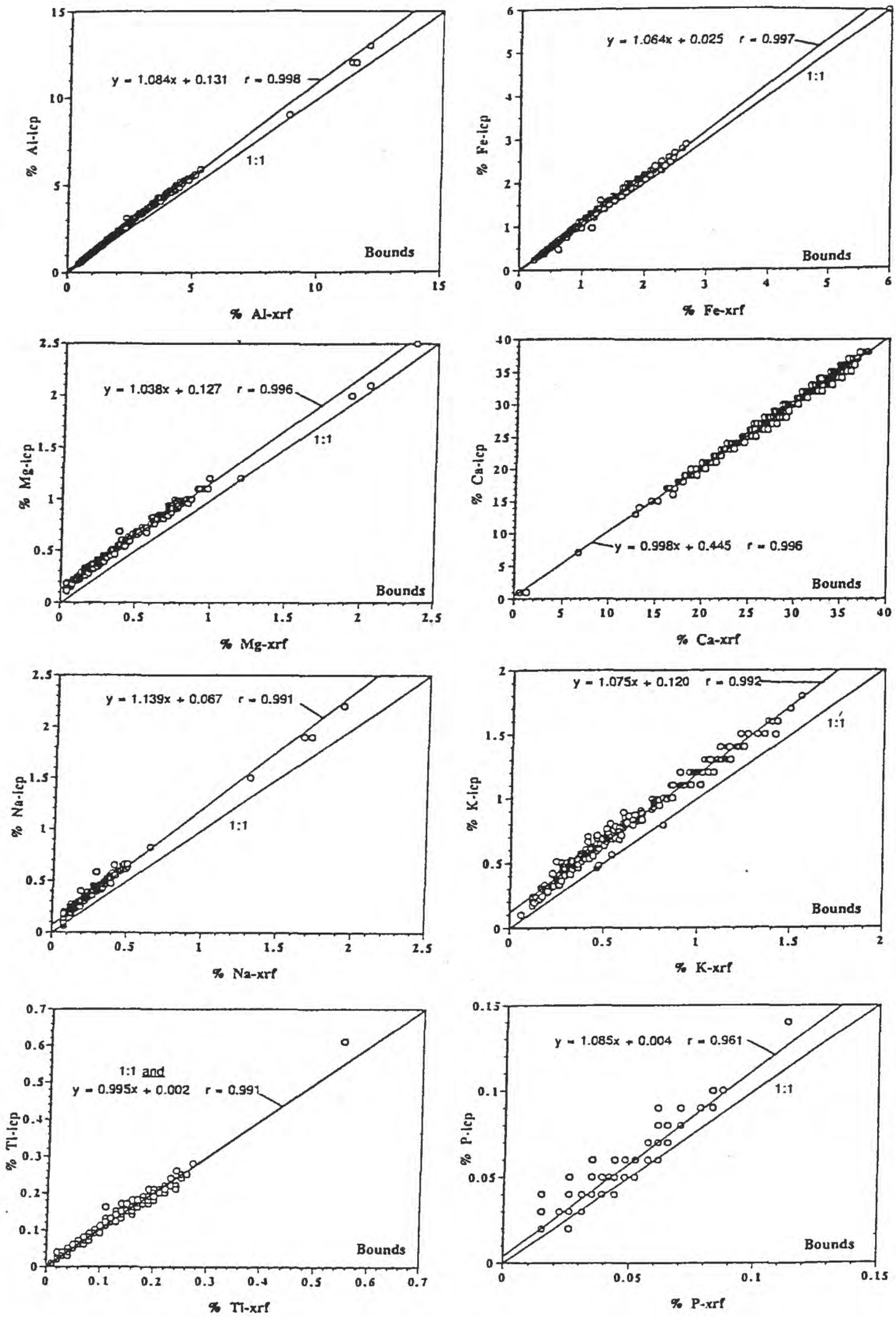

Figure 9. Scatter plots comparing measured concentrations (percent dry weight) of major elements by ICP and XRF in samples from the Niobrara Formation and the Bridge Creek Limestone Member of the Greenhorn Formation.

Figure 10. Plots of concentrations of major and trace elements and Rock-Eval hydrogen index versus depth for the Niobrara Formation. For those trace elements in some samples that had concentrations below the detection limits, a line marked "d.l." is drawn at the detection limit, and for plotting purposes the concentration in that sample was assigned a value of one part per million (ppm) lower than the detection limit.

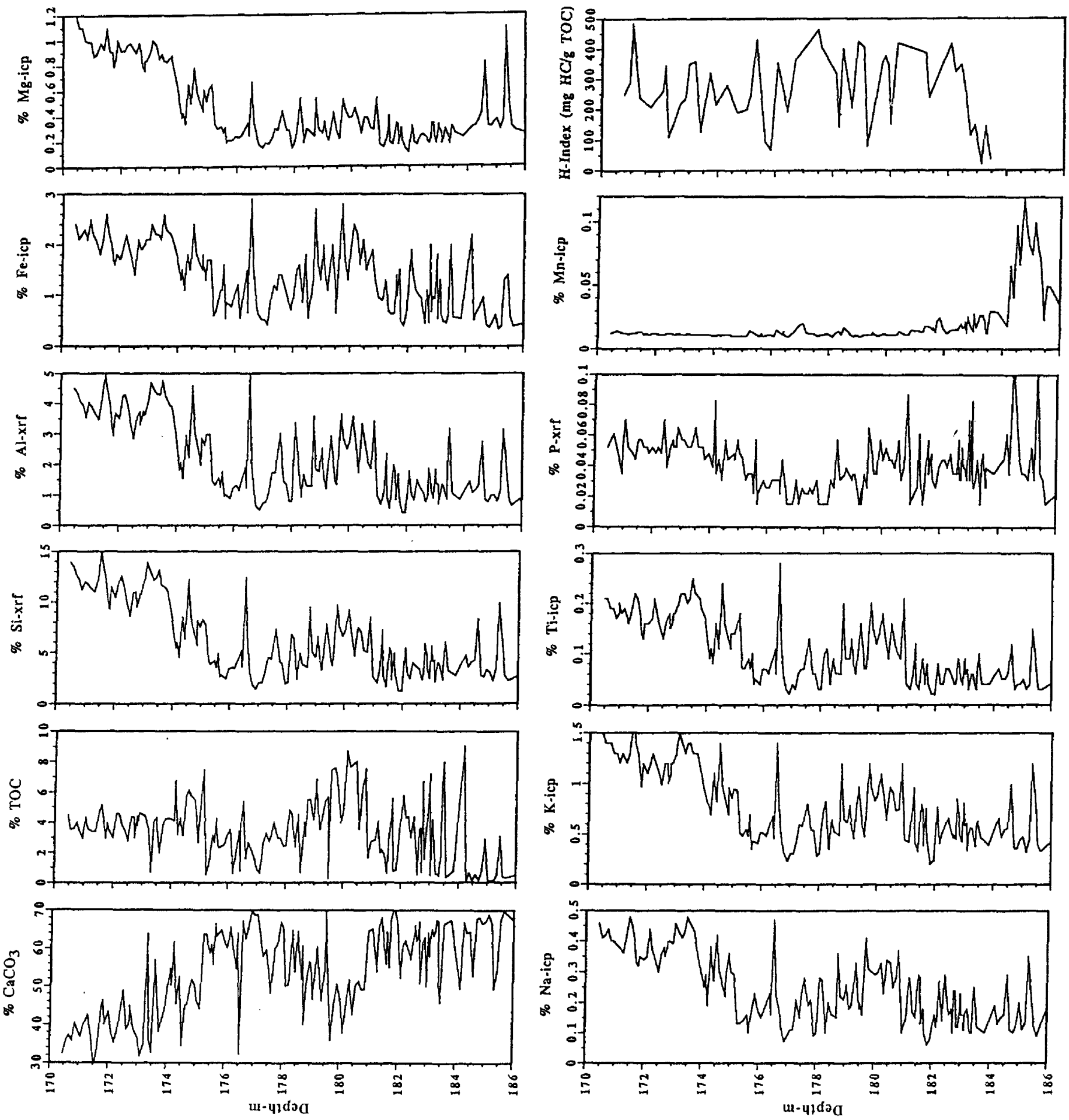

Figure 10. (cont.)

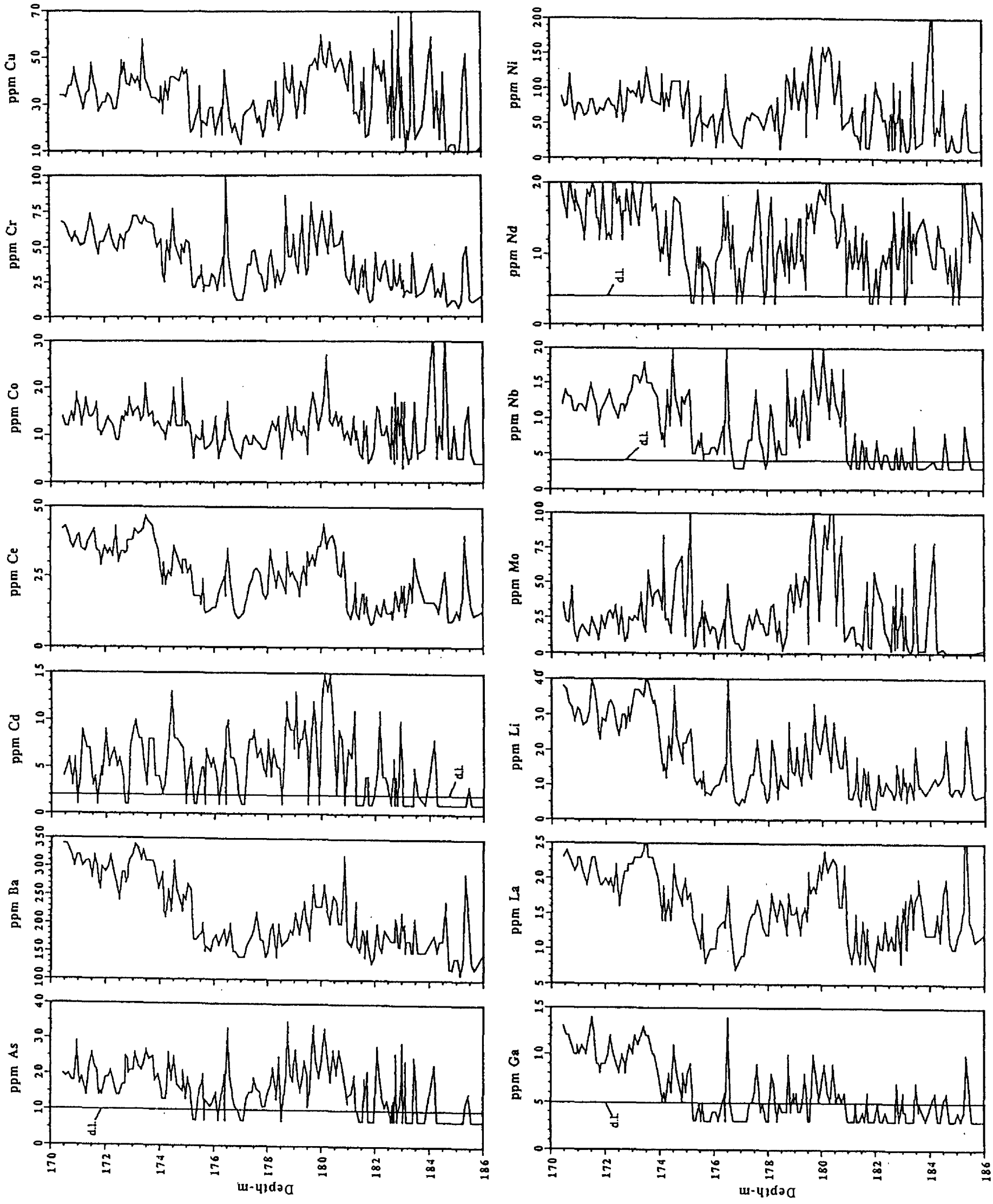

Figure 10 (cont.)

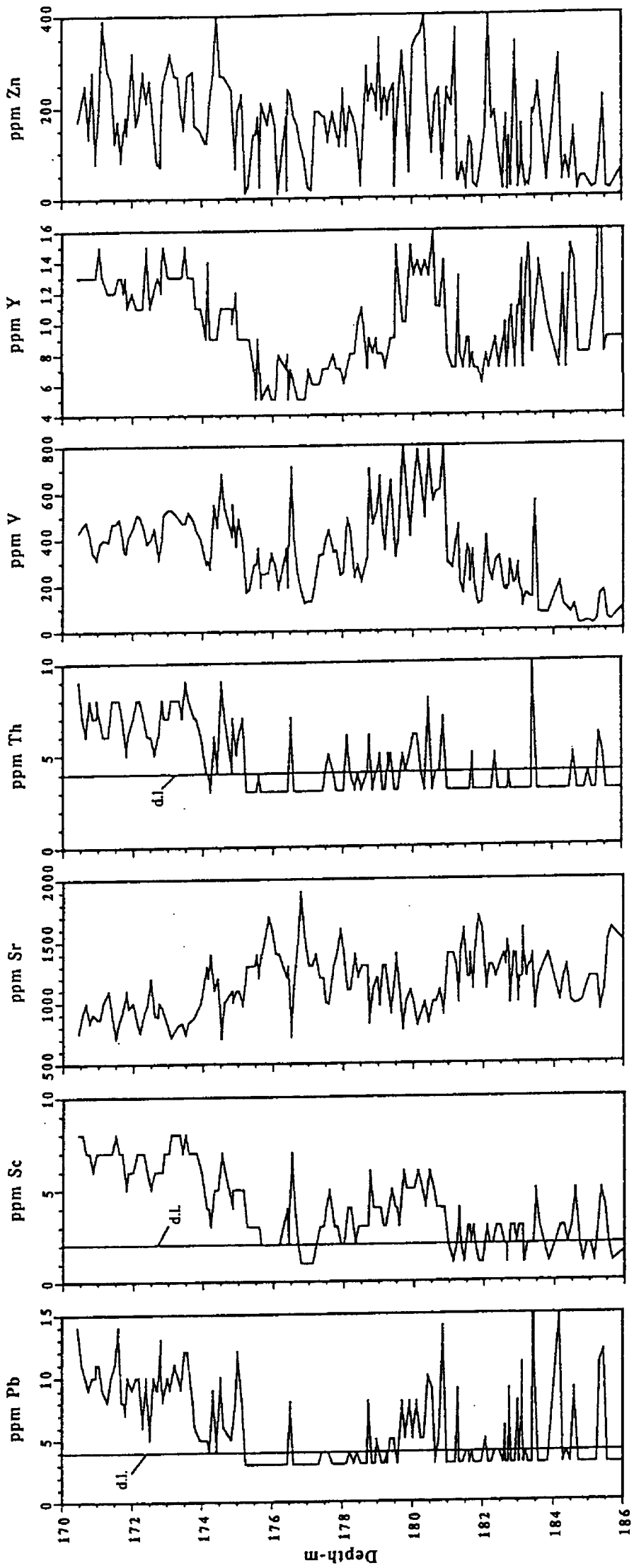

Figure 11. Plots of concentrations of major and trace elements versus depth for the Bridge Creek Limestone Member of the Greenhorn Formation. For those trace elements in some samples that had concentrations below the detection limits, a line marked "d.l." is drawn at the detection limit, and for plotting purposes the concentration in that sample was assigned a value of one part per million (ppm) lower than the detection limit.

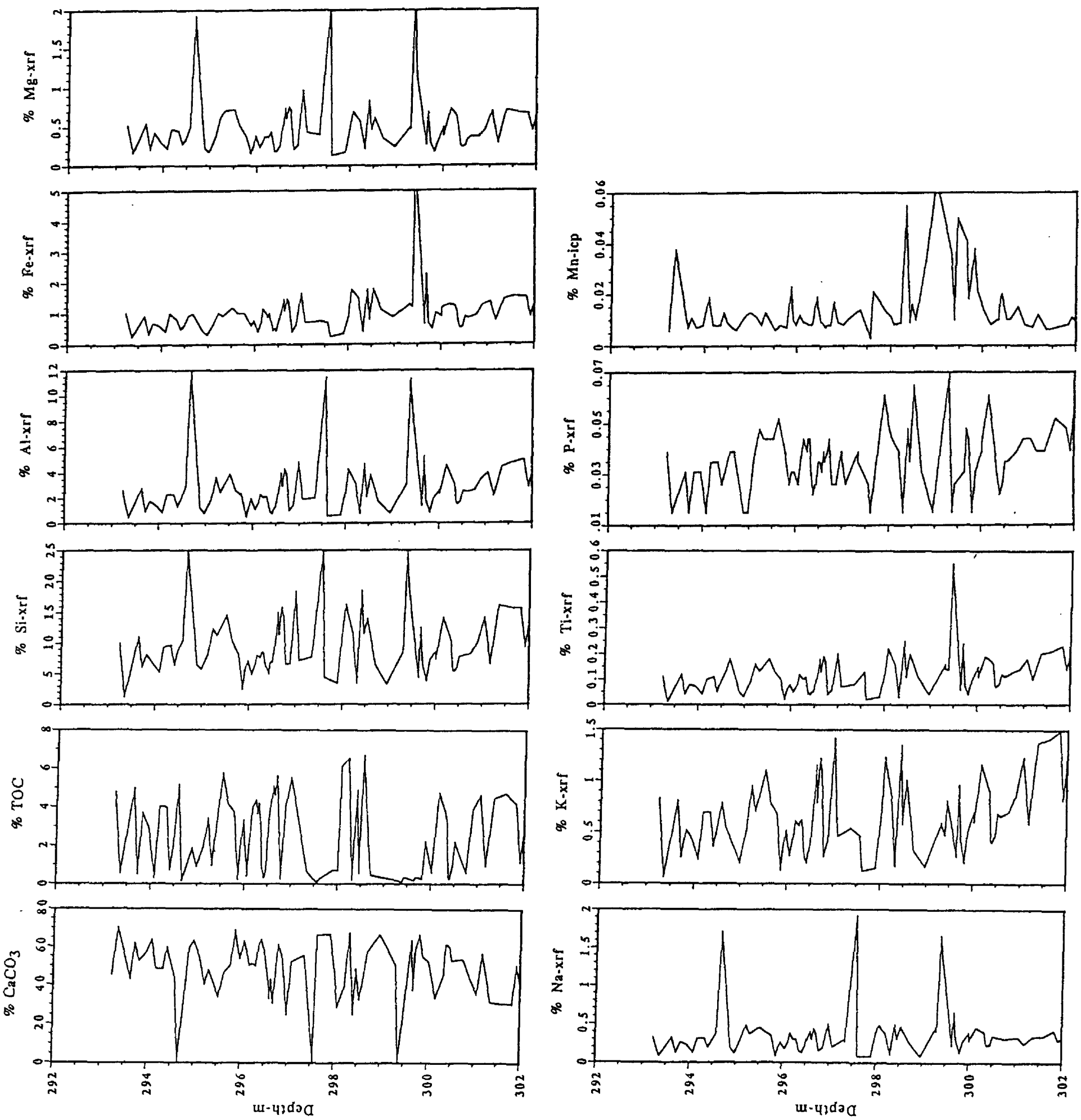

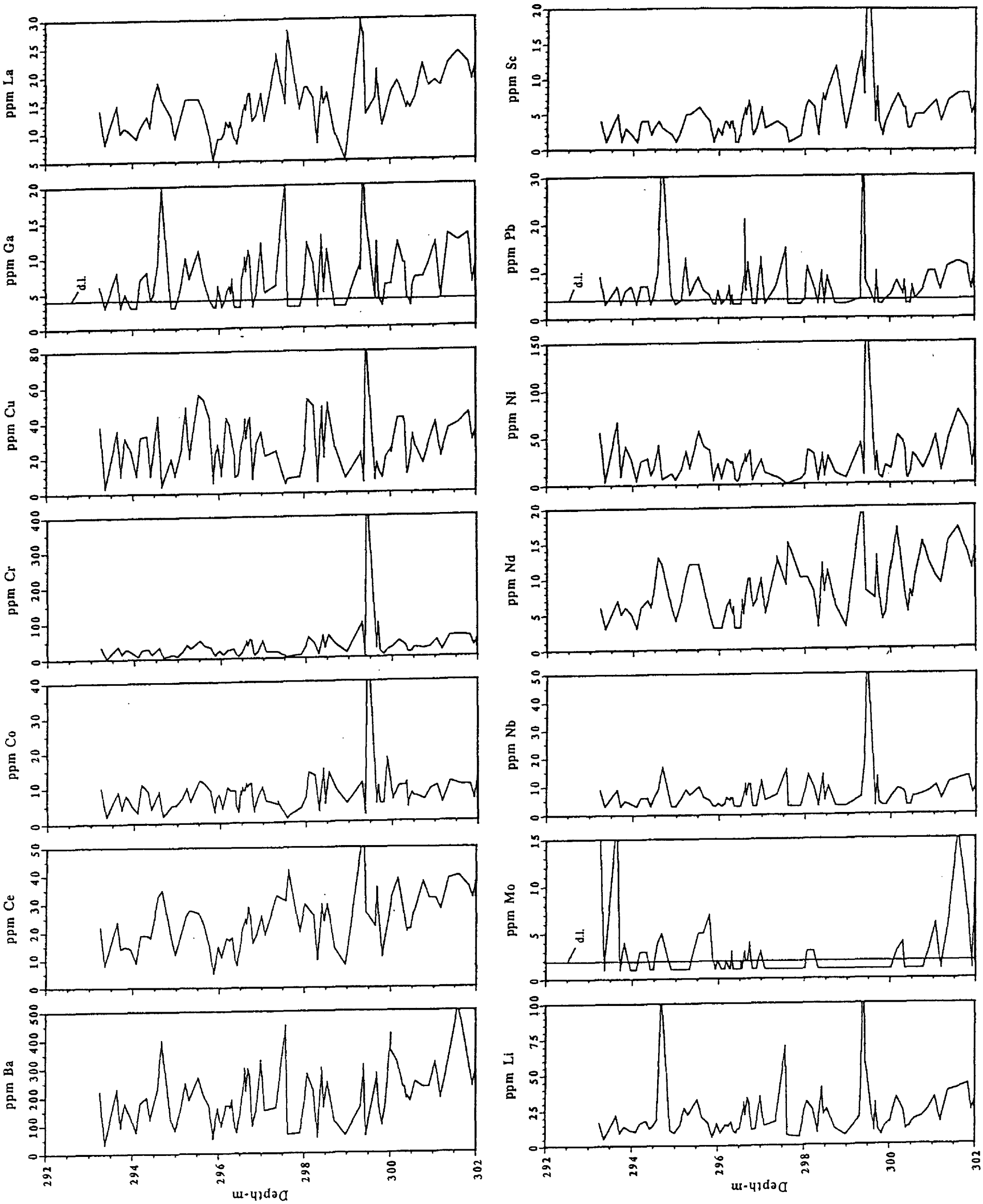

Figure 11. (cont.)

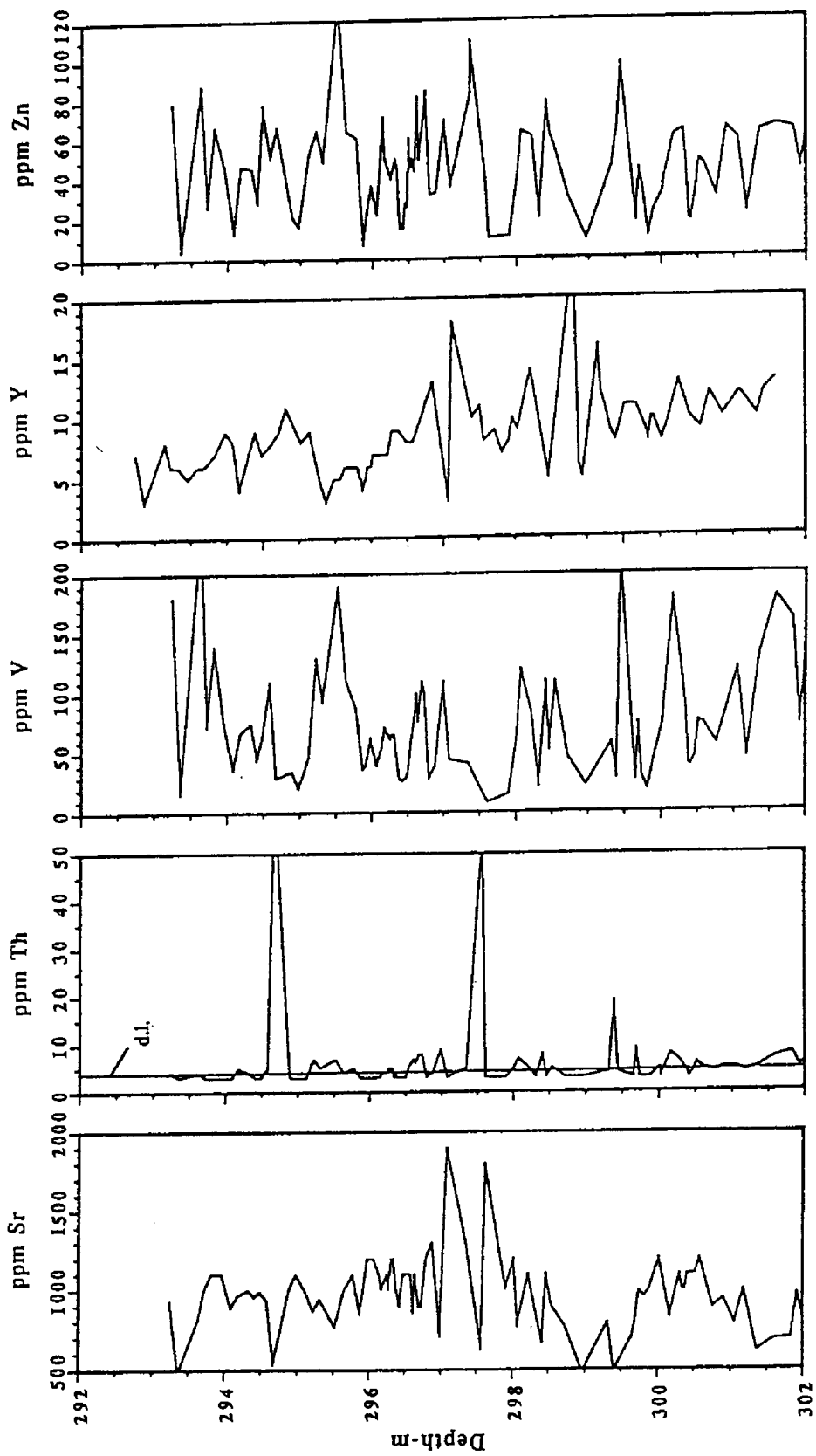

Figure 11 (cont.)

Carbon and Oxygen Isotope Analyses

Stable-carbon isotope ratios were determined on splits of the carbon samples from the Bridge Creek Limestone Member of the Greenhorn Formation using standard techniques (Pratt and Threlkeld, 1984). Powdered whole-rock samples for determination of carbon and oxygen isotope ratios in carbonate were reacted at 90°C with 100% phosphoric acid, and the evolved CO_2 was dehydrated and purified in a high-vacuum gas-transfer system. All isotope ratios were determined using a Finnigan MAT 252 isotope-ratio mass spectrometer. Results are reported in Appendix IV and plotted versus depth in Figure 12 in the standard per mil (‰) δ-notation relative to the University of Chicago Pee Dee belemnite (PDB) marine-carbonate standard,

$$\delta‰ = [(R_{sample}/R_{PDB})^{-1}] \times 10^3,$$

where R is the ratio (^{13}C:^{12}C) or (^{18}O:^{16}O).

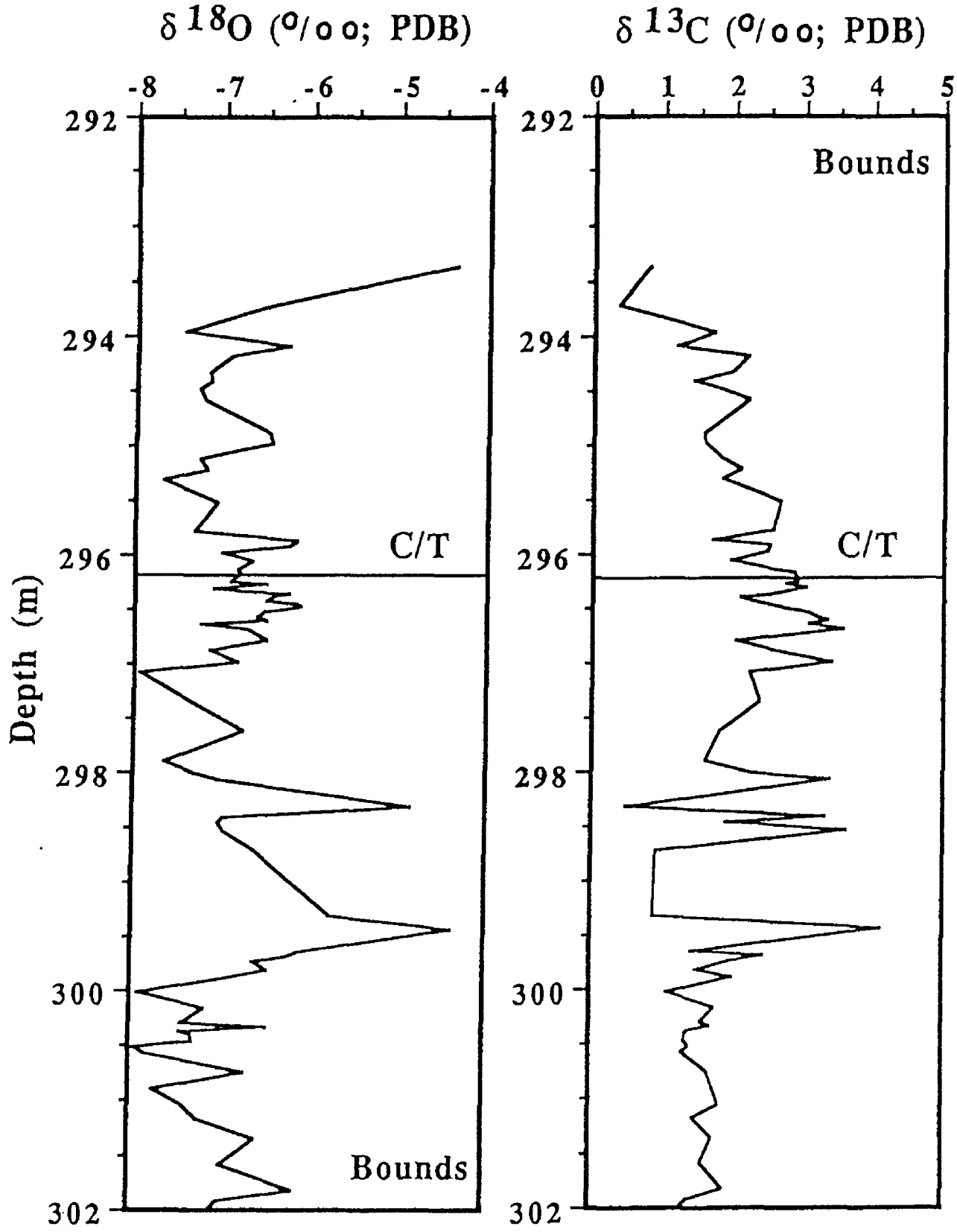

Figure 12. Plots of carbon and oxygen isotope ratios (expressed as the per mil [‰] difference relative to the PDB marine carbonate standard) versus depth in samples from the Bridge Creek Limestone Member of the Greenhorn Formation. The stratigraphic position of the Cenomanian/Turonian boundary is indicated by a line marked "C/T".

Rock-Eval Pyrolysis

Rock-Eval pyrolysis was used to determine the type of organic matter in samples from the Niobrara Formation (Appendix V). The Rock-Eval method provides a rapid determination of the hydrogen and oxygen richness and degree of preservation of sedimentary organic matter (Tissot and Welte, 1984; Peters, 1986). Concentrations of free and adsorbed hydrocarbons (HC) released by programmed heating of the sample in a stream of helium at a relatively low temperature (250°C) for 5 min are recorded as the area under the first peak on a pyrogram (S_1) (milligrams of HC per gram of sample). The S_1 peak is roughly proportional to the content of organic matter that can be extracted from the rock or sediment with organic solvents. The second peak on a pyrogram is composed of pyrolytic hydrocarbons generated by thermal breakdown of kerogen as the sample is heated from 250° to 550°C (S_2) (milligrams of HC per gram of sample). CO_2 also is generated by kerogen degradation and is retained during the heating interval from 250° to 390°C, and it was analyzed as the third peak on the pyrogram (S_3) (milligrams of CO_2 per grams of sample). The Rock-Eval instrument also records the temperature of maximum hydrocarbon yield (Tmax). The S_1 and S_3 peak areas, when calibrated and normalized to percent total organic carbon (TOC), yield a hydrogen index (HI) and an oxygen index (OI) expressed as milligrams of HC and CO_2, respectively, per gram of TOC. Values of HI and OI correlate well with atomic H:C and O:C ratios determined in the same samples by other methods (e.g., Tissot and Welte, 1984). The results of Rock-Eval pyrolysis are given in Appendix V, and values of HI are plotted versus depth in Figure 10.

Amoco Geochemical Data

Results of geochemical analyses on 55 samples from the lower 26 m of the Greenhorn Formation (Bridge Creek Limestone, Hartland Shale, and Lincoln Shale Members) and upper 11 m of the Graneros Shale obtained by M. D. Lewan while he was with Amoco Production Company are given in Appendix VI. Locations of these samples are indicated on the 100-cm core description forms in Appendix I. Values of $\delta^{13}C$ of isolated kerogen in the standard per mil (‰) δ-notation relative to the PDB marine-carbonate standard, percentages of N, C, H, and O in isolated kerogen, % TOC, and the Rock-Eval parameters S1, S2, H-index, and Tmax were measured using standard methods at Amoco's Research Center in Tulsa. Concentrations of major-element oxides and sulfur (in percent), and 13 trace elements (Ba, Cr, Cu, Nb, Ni, Pb, Rb, Sr, Th, U, Y, Zn, and Zr in parts per million, ppm) were determined by XRF at X-ray Assay Laboratories (XRAL), Toronto, Canada. Plots of selected geochemical parameters versus depth are shown in Figure 13.

Figure 13. Plots of % $CaCO_3$; % TOC; hydrogen Index; δ^{13} C in kerogen; % total S; % N, C, and H in kerogen; and whole-rock concentrations of major and trace inorganic elements versus depth for the Amoco data from the Greenhorn Formation. Boundaries between the Bridge Creek, Hartland Shale, and Lincoln Shale Members are indicated by dashed lines on the $CaCO_3$ plot. The stratigraphic position of the Cenomanian/Turonian boundary is indicated by a line marked "C/T" on the $CaCO_3$ plot.

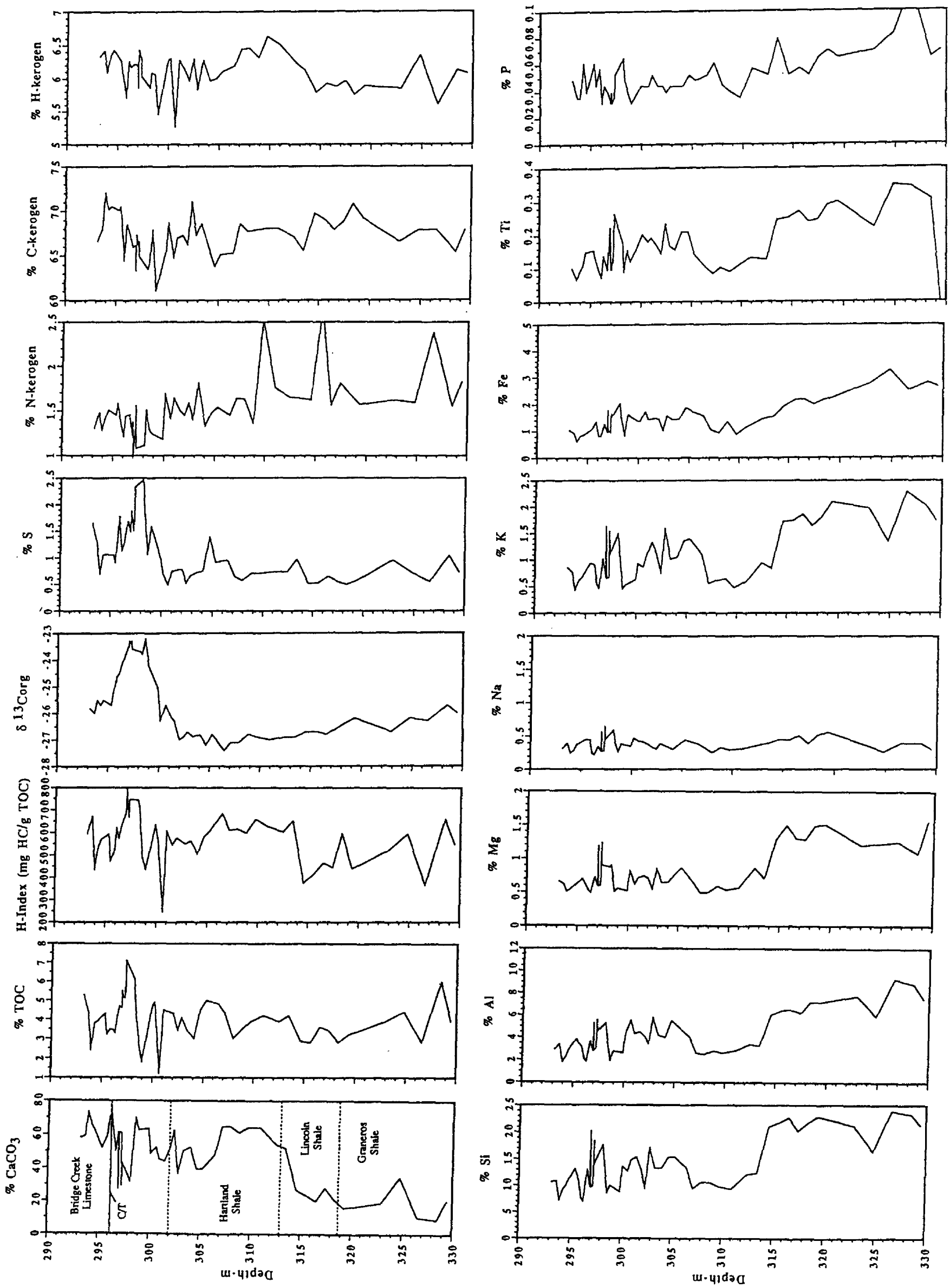

Figure 13 (cont.)

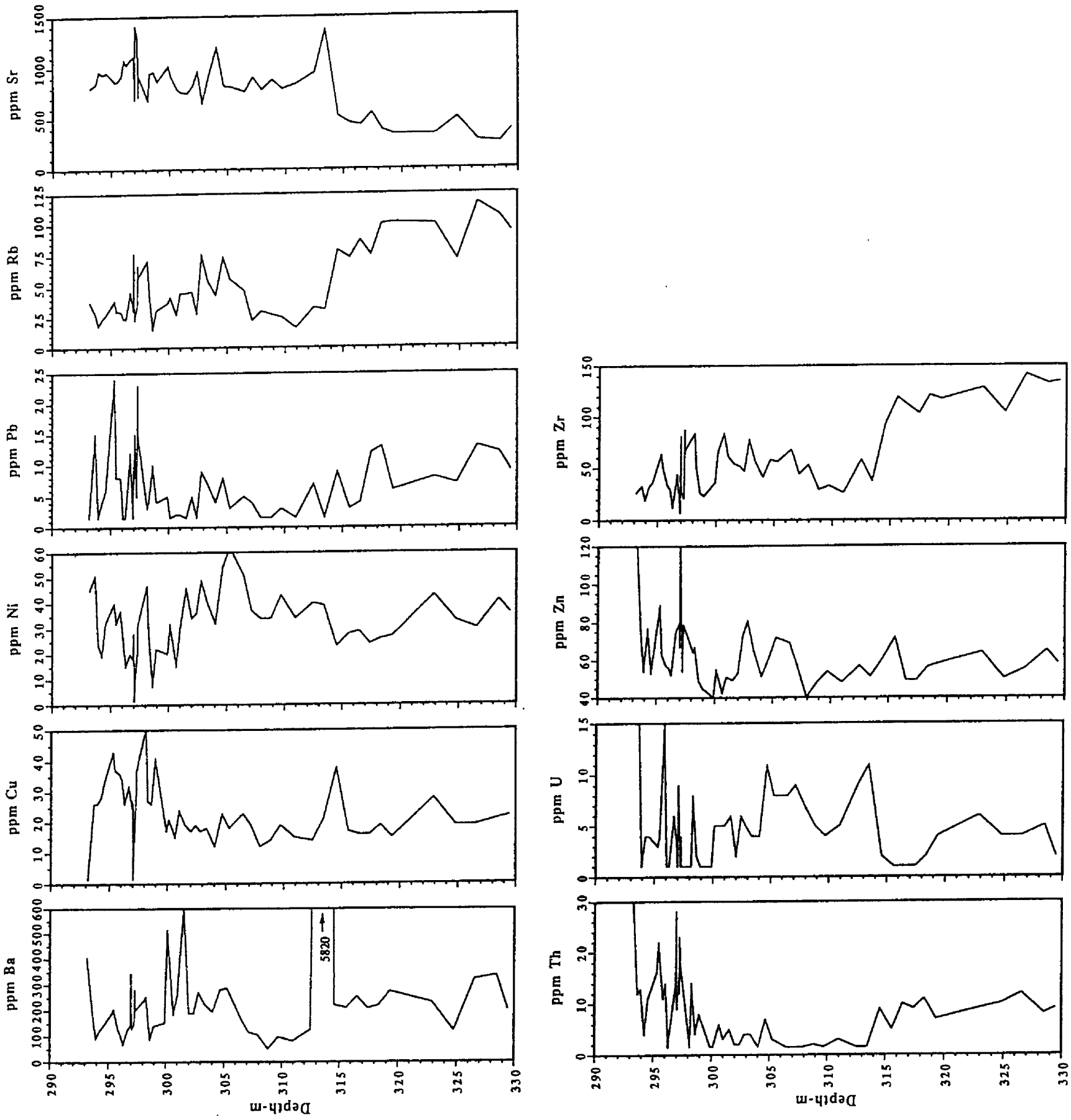

ACKNOWLEDGMENTS

We are particularly grateful to Bob Scott and Amoco for releasing the Cretaceous part of the Bounds core to the U.S.G.S. Bob Scott was also most generous with his ideas and insight on the Cretaceous section in the Bounds core in particular and on the Cretaceous of the Western Interior in general. Paul Howell of the U.S.G.S. Core Research Center skillfully slabed the core, and Bill Whitus, also at the U.S.G.S.-C.R.C. archived the core and assisted with sampling and processing. We thank T. White, M. Pagani, R. Pancost, and D. Walizer for conducting the coulometric carbon analyses and the carbon and oxygen isotope analyses, D. L. Fey for conducting the ICP analyses, and D. F. Siems and J. S. Mee for conducting the XRF analyses.

REFERENCES CITED

Arthur, M. A. and Sageman, B. B.., 1994, Black shells: Deposition mechanisms and environments of ancient deposits: Annual Reviews of Earth and Planetary Sciences, v. 22, p. 499-551.

Bedecker, P.A. (Editor), 1987, Geochemical methods of analysis. U.S. Geological Survey Bulletin 1770, 129 pp.

Engleman, E. E., Jackson, L. L., Norton, D. R., and Fischer, A. G., 1985, Determination of carbonate carbon in geological materials by coulometric titration: Chemical Geology, v. 53, p. 125-128.

Peters, K. E., 1986, Guidelines for evaluating petroleum source rock using programmed pyrolysis, American Association of Petroleum Geologists Bulletin, v. 70, p. 318-329.

Pratt, L. M., and Threlkeld, C. N., 1984, Stratigraphic significance of $^{12}C/^{13}C$ ratios in mid-Cretaceous rocks of the western interior, U. S. A., in Stott, D. F., and Glass, D. J., eds., The Mesozoic of middle North America: Canadian Society of Petroleum Geology, v. 9, p. 305-312.

Randolph, S. B., and Jourdan, A. P., 1991, Slim-hole continuous coring and drilling in Tertiary sediments: SPE/IADC Drilling Conference, Amsterdam, Paper no. 21906, p. 81-91.

Scott, R. W., Evetts, M. J., and Stein, J. A., 1993, Are seismic/depositional sequences time units? Testing by SHADS cores and graphic correlation: Proceedings of the 25th Annual Offshore Technology Conference, Houston, TX, U.S.A., 3-6 May, 1993, Paper OTC-7110, p. 269-276.

Tissot, B. P., and D. H. Welte, 1984, Petroleum Formation and Occurrence, 2nd ed., Springer-Verlag, New York, 538 p.

Walker, S. H., and Millhein, K. K., 1989, An innovative approach to exploration and exloitation drilling: The slim-hole high-speed drilling system: Proceedings of the 64th Annual Technology Conference and Exhibition, SPE Paper no.19525, p. 73-89.

Appendix I. Descriptions of 1-m sections of the Amoco Bounds core.

CORE: AMOCO Rebecca K.
Bounds #1

BOX # 1a

BOX FOOTAGE 529-539'

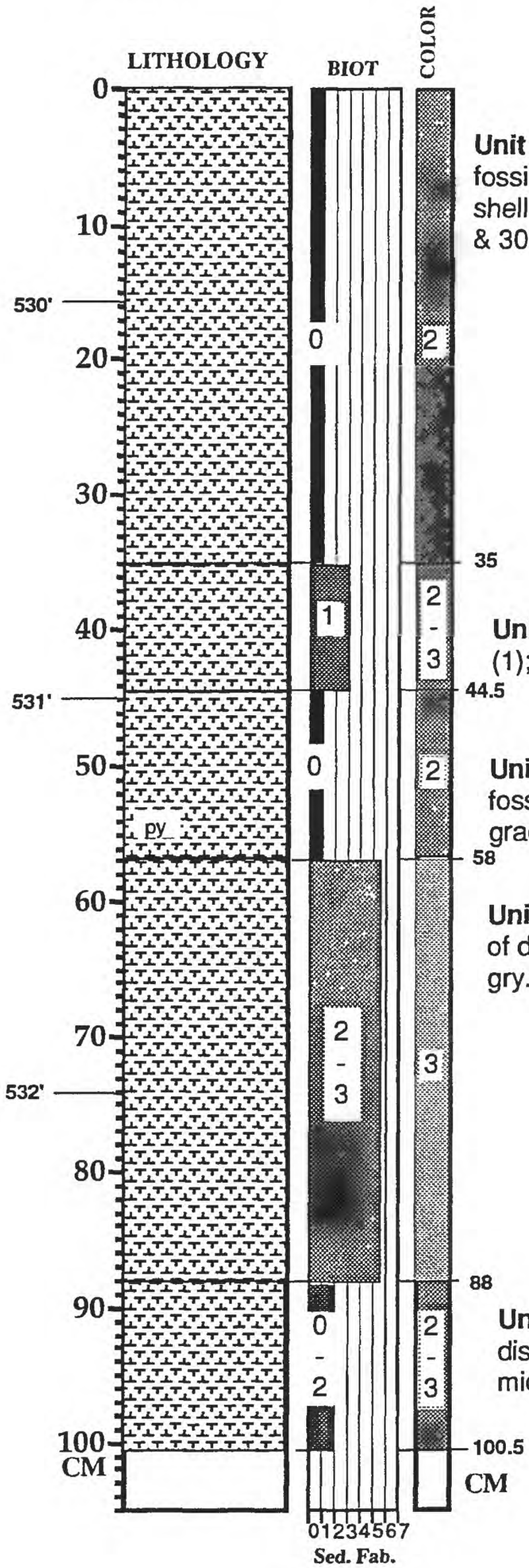

Unit 1 - 35 cm; MARLSTONE; v. well lam. (1); no trace fossils (0); ol. gry. (2); white specks (fecal pellets?), shell frags., & forams conc. in laminae; lno. frags. @ 27 & 30 cm; l. contact grad. over 3 cm

Unit 2 - 9.5 cm; MARLSTONE; poor. lam. (3); microbiot. (1); ol .gry. (2/3); a few thin lno. frags; l. contact sharp

Unit 3 - 13.5 cm; MARLSTONE; v. well lam. (1);no trace fossils (0); ol. gry. (2); pyrite nodule; l. contact gradational

Unit 4-- 30 cm; MARLSTONE; sl.-mod. biot. (5/6); zones of discrete horiz. burrows, Chon. & Plano. (2/3); lt. ol. gry. (3); l. contact gradational over 12 cm

Unit 5 -39.5cm; MARLSTONE; mod. lam (2); few discrete horiz. Plano. burrows (0/2) w/ occasional microbiot. fab.; ol. gry. (2/3); a few lno. frags.

MAA/WED/BBS - 6/92

CORE: AMOCO Rebecca K
Bounds #1

BOX #1b

BOX FOOTAGE 529-539'

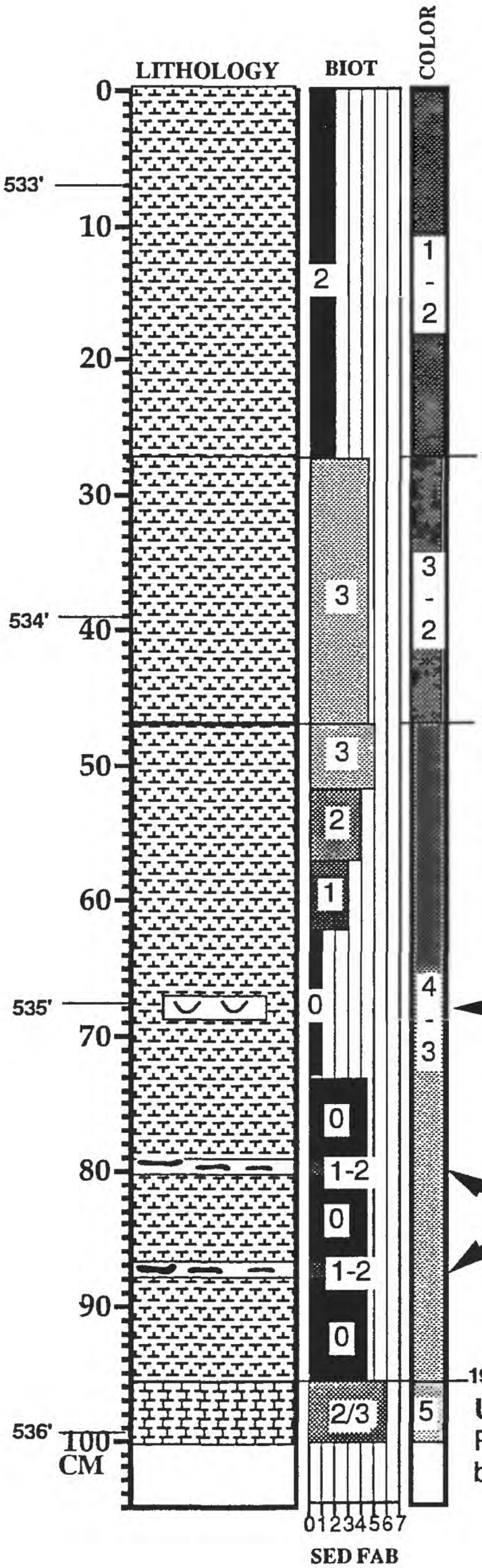

Unit 5 (cont.)- MARLSTONE, as above but sl. darker at base; l. cont. sharp

Unit 6 - 19 cm; MARLSTONE, sli. biot. (4/5) w/ large Chond. & Plano. (3); lt. ol. gry. to ol. gry. (3/2); fewer shell frags. & fecal pellets than above; more clay rich?; l. cont. sharp

Unit 7 - 50 cm; MARLSTONE, biot. from no trace fossils (0) to large Chond. & Plano. (3) at top as indicated; lt. ol. gry. to yel. gry. (3/4); scat. shell frags. (Inos. and oysters); contains dark speckles (Forams?) in addition to light specks (fecal pel.?) throughout; l. cont. sharp

bivalve layer (Inos.; oysters)

burrowed horizons (Plano.)

Unit 8 - 12 cm; MARLY LIMESTONE; mod .biot. (6) w/ Plano. and Chond. (2/3); lt. gry. to yel. gry. (4/5); scat. blk. specks throughout; l. cont. sharp

MAA/WED/BBS - 6/92

CORE: AMOCO Rebecca K
Bounds #1

BOX # 1c

BOX FOOTAGE 529-539

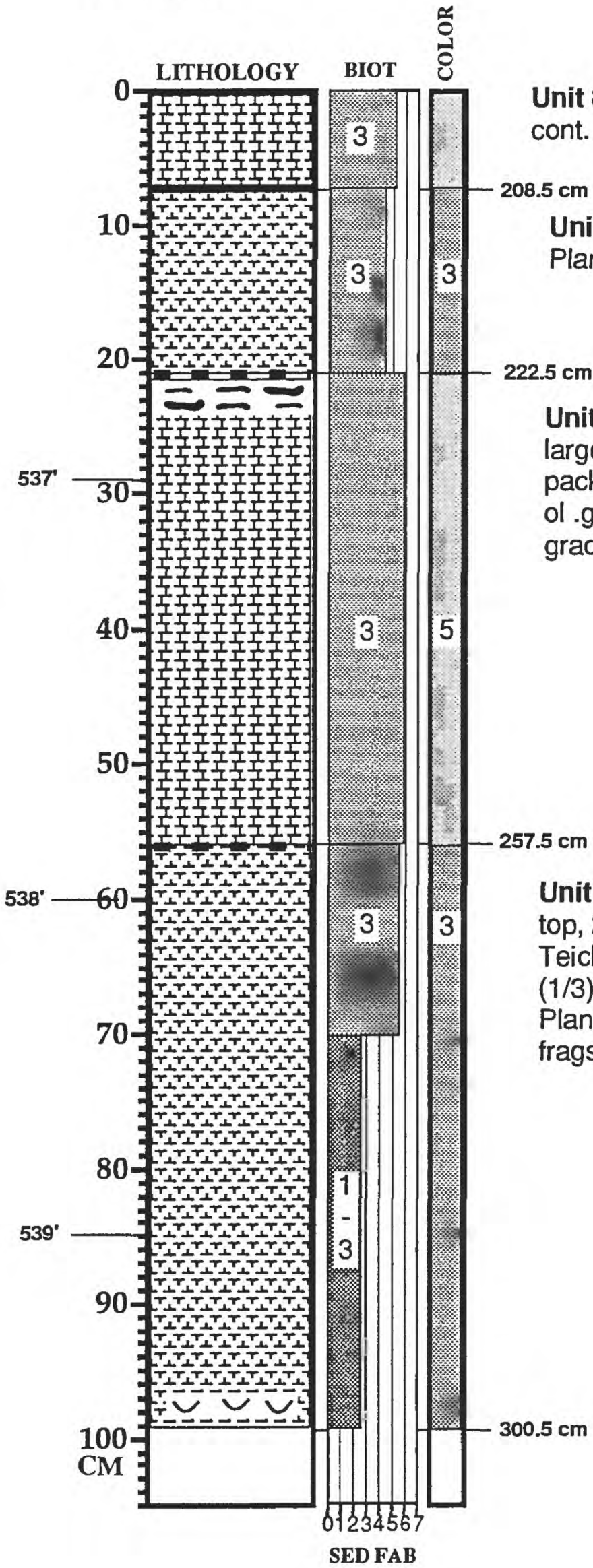

Unit 8 (cont.)- 12 cm; MARLY LIMESTONE as above; l. cont. sharp

Unit 9 - cm; MARLSTONE; burr. to sl. biot .(4/5) w/ large Plano. burrows (3); lt ol. gry. (3); l. cont. grad.

Unit 10 - 35 cm; MARLY LIMESTONE; sl. biot. (4/5) w/ large Plano. (3); top 3 cm is 3-cm horizon with closely packed Plano. w/ sharp lower contact; v. lt. gry. (5) w/ lt. ol .gry. burrow fill; scat. blk specks throughout; l. cont. grad.

Unit 11 - 61 cm; MARLSTONE; sl . to mod. biot. (5/6 top, 2/3 bottom) w/ large Plano. and occasional large Teich.? burrows; at top (3) smaller burrows at bottom (1/3); top 3 cm is 3-cm horizon with closely packed Plano. w/ sharp lower contact; lt. ol. gry. (3); scat. Ino. frags. throughout

MAA/WED/BBS - 6/92

CORE: AMOCO Rebecca K
Bounds #1

BOX # 2a

BOX FOOTAGE 539-549'

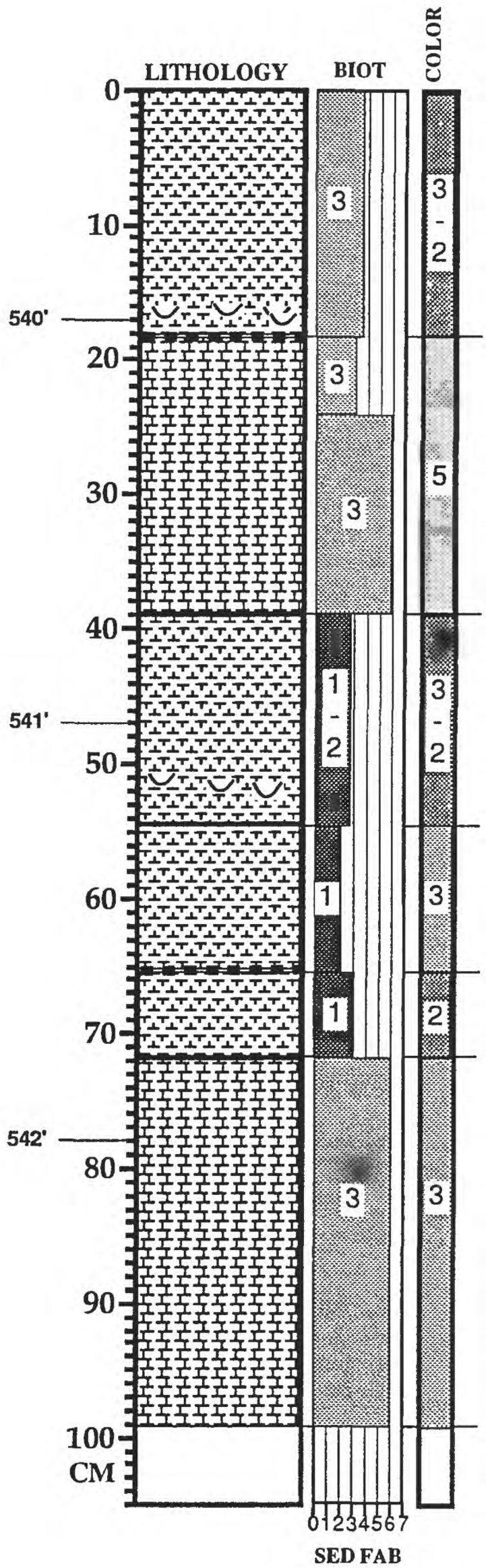

Unit 11 (cont.) - MARLSTONE as above; oyster horizon 16 cm below top; l. contact grad. over 5 cm

Unit 12 - 21 cm; MARLY LIMESTONE; poorly lam. at top, becomming mod. biot. (3 top, 6 bottom) w/ large and small Plano.; v. lt. gry. (5); Ino. frags. 2 cm below top; l. contact sharp

Unit 13 - 15 cm; MARLSTONE to MARLY LIMESTONE; mod. to poor. lam. (2/3); microbiot. to small chond. (1/2); mod. ol. gry. (3/2); scat. Ino. frags, flattened fecal pel., and large white specks throughout; layer of shell frags.12-13 cm below top; l. contact sharp

Unit 14 - 11cm; MARLSTONE to MARLY LIMESTONE; mod. lam. (2); microbiot.(1) but with zones of discrete Plano. burrows (3); lt. ol. gry. (3); l. contact grad. over 2 cm

Unit 15 - 6.5cm; MARLSTONE; poor. lam. (3); microbiot. (1); ol. gry (2); l. contact sharp

Unit 16 - 35 cm; MARLY LIMESTONE; mod. biot. (6) w/ faint large vert. burrows; large Chond. and Plano. burrows (3); lt. ol. gry. (3) w/ ol. gry. (2) burrow fill

MAA/WED/BBS - 6/92

BOX # 2b

CORE: AMOCO Rebecca K
Bounds #1

BOX FOOTAGE 539-549

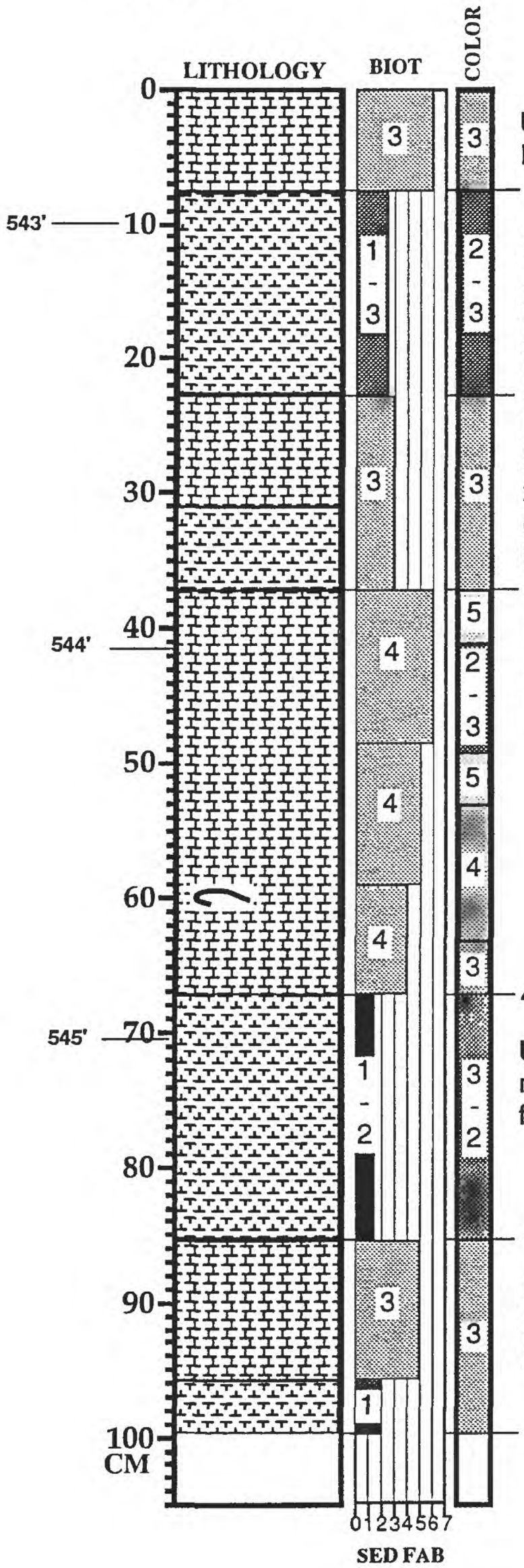

Unit 16 (cont.) - MARLY LIMESTONE as above; a few Ino. frags.; l. cont. grad. over 4-5 cm

Unit 17 - 16.5 cm; MARLSTONE TO MARLY LIMESTONE; mod. to poor. lam. (2-3); microbiot. w/ zone of descrete Plano. burrows ca. 8 cm below top (1-3); lt. ol. gry. to ol. gry. (3-2); thin-shelled Ino. debris common.

Unit 18 - 13.5 cm; MARLSTONE TO MARLY LIMESTONE; poor. lam. (3); large Plano. burrows w/ zone of descrete Plano. burrows ca. 7-8 cm below top (3); lt. ol. gry. (3); lighter at top, grading to darker at base; Ino. frags. throughout; l. cont. grad. over 2 cm

Unit 19- 29.5 cm; MARLY LIMESTONE; mod. biot. (6) at top grading to burrowed with disrupted lam. (4) at base; Teich. @ 15, 20, & 25 cm; v. lt. gry. (5) grading to lt. ol. gry. (3) at base; l. cont. grad. over 2 cm

Unit 20 - 18.5 cm; MARLSTONE; well lam. (1-2); microbiot. (1-2); lt. ol. gry. (3); to ol. gry. (2); scat. Ino. frags. throughout

Unit 21 - 18 cm; MARLSTONE to MARLY LIMESTONE; upper 10 cm mod. biot. (5) grading to mod. to poor. lam. (2) at base; lt. ol. gry. (3)

MAA/WED/BBS - 6/92

CORE: AMOCO Rebecca K
Bounds #1

BOX # 2c

BOX FOOTAGE 539-549

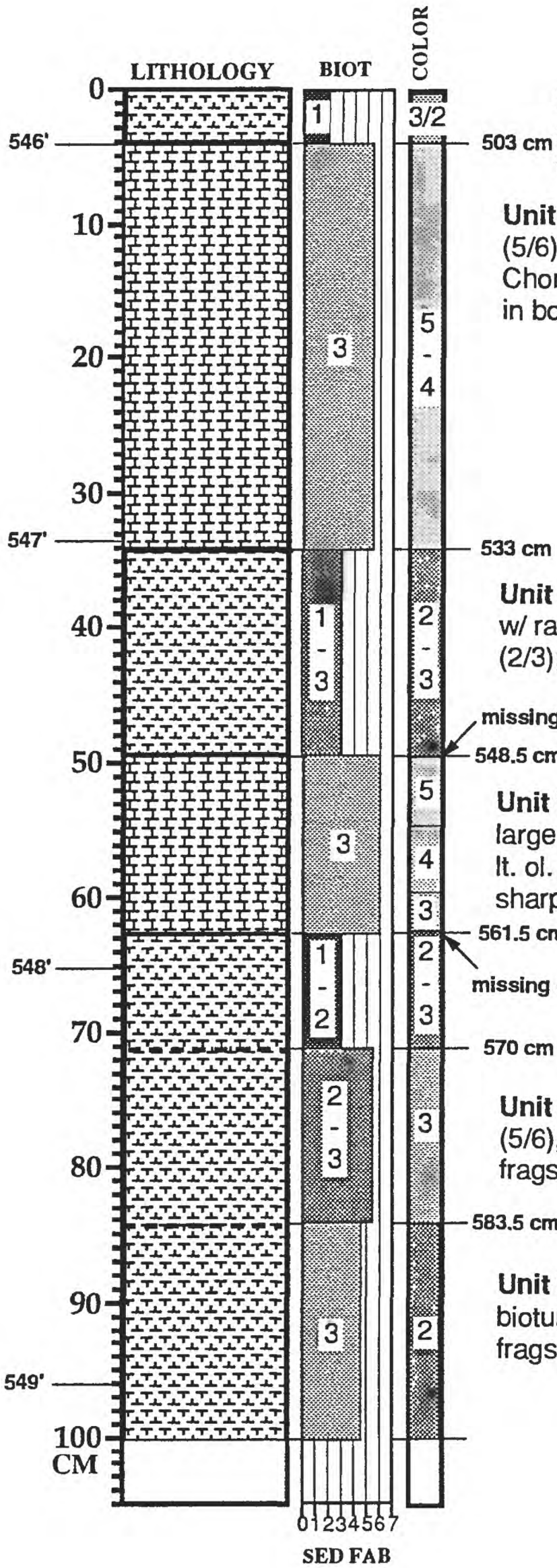

Unit 21 (cont.) - MARLSTONE to MARLY LIMESTONE as above; fish debris at base; abund. white specks throughout; l. cont. sharp

Unit 22 - 30cm; MARLY LIMESTONE; sl. to mod. biot. (5/6) but few distinct burrows, mostly large Plano. & Chond. (3); v. lt. gry. to yel. gry. (5/4); dk. specks dense in bottom 1/2 of unit; l. cont. sharp

Unit 23 - 15.5cm; MARLSTONE; mod. lam. to biot. (2/4) w/ rare distinct Plano. burrows (1/3); lt. ol. gry. to ol. gry. (2/3); l. cont. sharp

Unit 24 - 13 cm; MARLY LIMESTONE; mod. biot. (6) w/ large distinct Plano. burrows (3); v. lt. ol. gry. grading to lt. ol. gry. (5-4-3) with some darker burrow fill; l. cont. sharp

Unit 25 - 8.5 cm; MARLSTONE; mod. to poor. lam. (2/3); microbioturb. w/ some Chond. burrows (1/2); lt. ol. gry. to lt. ol. gry. (2/3); rare Ino. frags.; l. cont. grad. over 3 cm;

Unit 26 - 13.5 cm; MARLSTONE; sli. to mod. bioturb. (5/6), w/ Plono. burrows (2/3); lt. ol. gry. (3); rare Ino. frags.; l. cont. grad. over 4 cm

Unit 27 - 22.5cm; MARLSTONE, similar to Unit 26; sli. bioturb. (4/5), w/ Plano. burrows (3); ol. gry. (2); rare Ino. frags.

MAA/WED/BBS - 6/92

CORE: AMOCO Rebecca K
Bounds #1

BOX # 3a

BOX FOOTAGE 549-559'

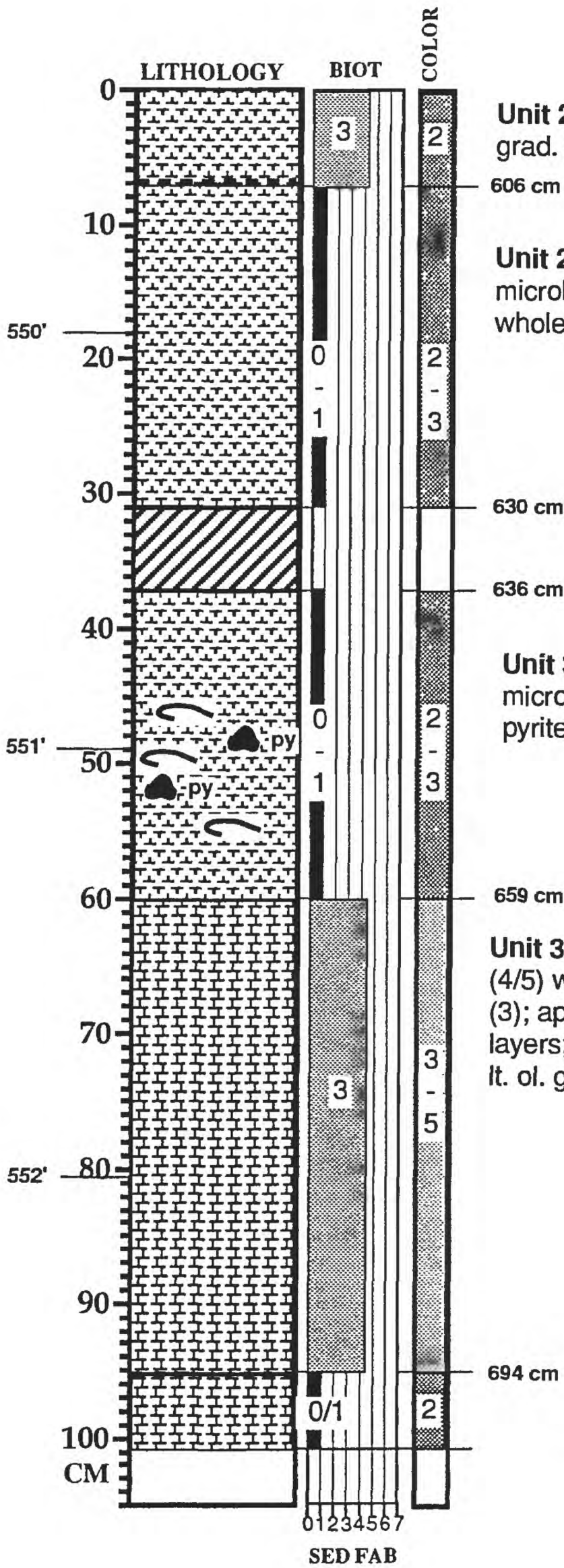

Unit 27 (cont.) - MARLSTONE as above; l. contact grad. over 3 cm

Unit 28 - 24 cm; MARLSTONE; well lamin. (1) w/ some microbioturb. (0/1); ol. gry. to lt. ol. gry. (2/3); scattered whole, rel. large Ino. valves; l. contact sharp

Unit 29 - 6 cm; BENTONITE; sample taken; l. contact sharp

Unit 30 - 23cm; MARLSTONE; well lamin. (1) w/ some microbioturb. (0/1); ol. gry. to lt. ol. gry. (2/3); Inos. & pyrite nodules in middle of bed; l. contact sharp

Unit 31- 35 cm; MARLY LIMESTONE; burr. to sli. biot. (4/5) w/ large Plano. burrows up to 0.5 cm in diameter (3); appears laminated but is actually totally biot. along layers; fecal pel. & forams rare but incr. in lower 5-6 cm; lt. ol. gry. to v. lt. gry. (3/5); l. cont. grad. over 3 cm

Unit 32 - 49cm; MARLSTONE; well lamin. (1) w/ some of mod. lamin & microbioturb. (0/1); ol. gry. (2)

MAA/WED/BBS - 6/92

BOX # 3b

CORE: AMOCO Rebecca K
Bounds #1

BOX FOOTAGE 549-559

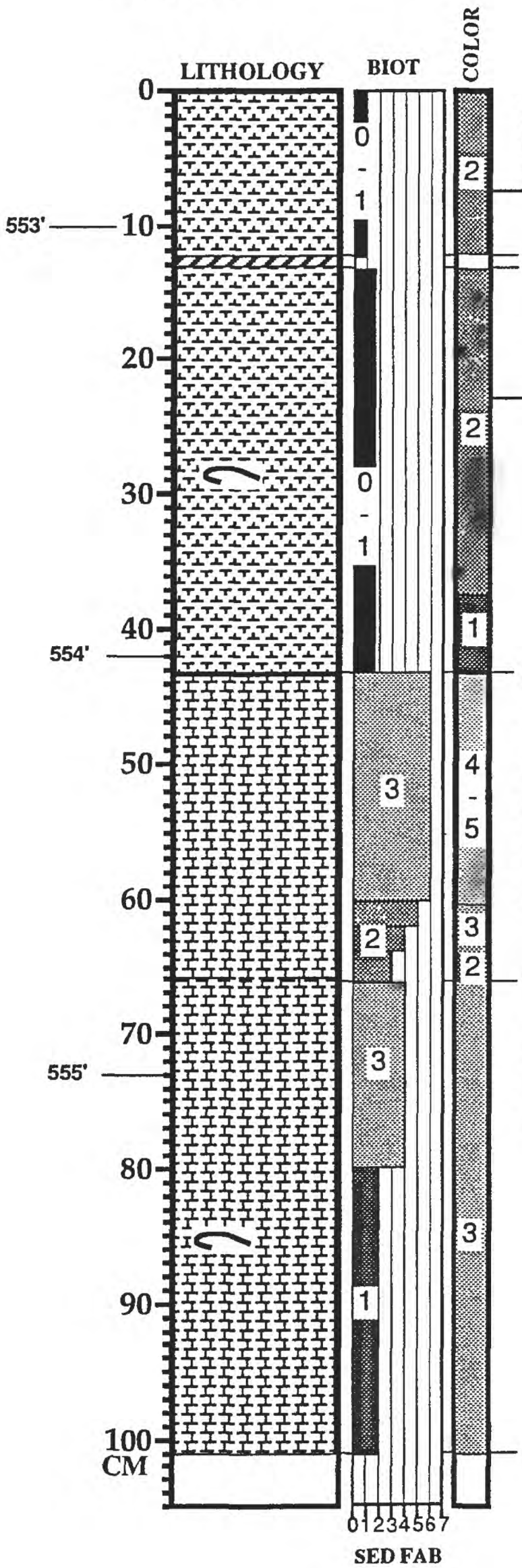

Unit 32 (cont.) - MARLSTONE as above; mostly well lam (0/1); ol. gry. (2); v. thin-shelled Inos. common; l. cont. sharp

BENTONITE stringer; lt. gry. w/ red stain on borders

Zone w/ abund. fecal pel. & Globigerinid-type forams

743 cm

Unit 33 - 22.5 cm; MARLY LIMESTONE; mod. biot. (6) w/ abund. large Plano. burrows at top (3) grading to disrupted lam. (4/3) w/ small burr. (2) at base; lt. gry. (4/5) grading to ol. gry (2) at base; no white specks in upper part but incr. in lower part; few Ino. frags.; l. cont. grad. over 10 cm

765.5 cm

Unit 34 - 38.5 cm; MARLY LIMESTONE; sparcely burr. in upper 14 cm (4) w/ lg. Plano. burrows (3); mod. lamin. (2) at bottom w/ some microbiot. (1); abund. white specks; ol gry. (3)

MAA/WED/BBS - 6/92

CORE: AMOCO Rebecca K
Bounds #1

BOX # 3c

BOX FOOTAGE 549-559

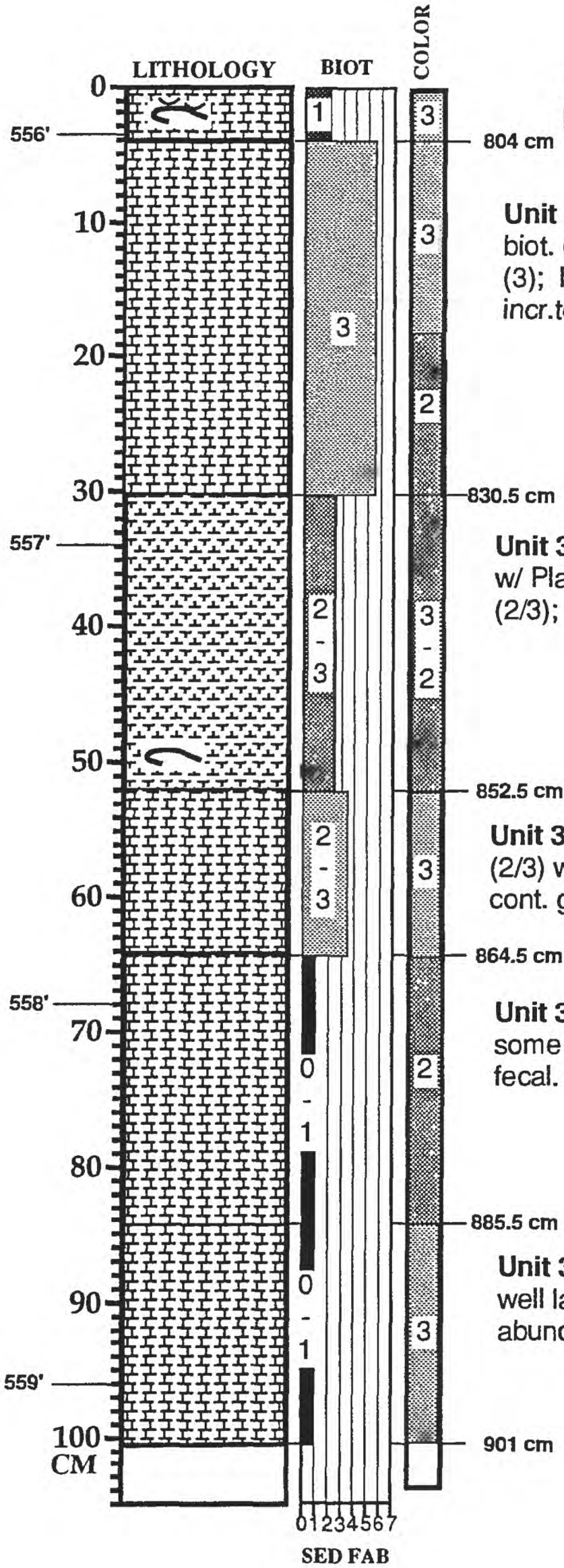

Unit 34 (cont.) - MARLY LIMESTONE as above; large Ino. w/ oyster encrust.; l. cont. sharp

Unit 35 - 26.5 cm; MARLY LIMESTONE; sl. to mod. biot. (5/6) w/ a few distinct large Plano. & Chond. burr. (3); lt. gry. grading to ol. gry. at base (3-2); fecal pel. incr.toward bottom of unit; l. cont. grad. over 6 cm

Unit 36- 22 cm; MARLSTONE; mod. to poor. lam. (2/3) w/ Plano. & Chond. burrows (2/3); lt. ol. gry. to ol. gry. (2/3); 2 thin-shelled Ino. frags.; l. cont. grad. over 2 cm

Unit 37 - 12 cm; MARLY LIMESTONE; mod. to poor. lam. (2/3) w/ Plano. & Chond. burrows (2/3); lt. ol. gry. (3); l. cont. grad. over 2 cm

Unit 38 - 21 cm; MARLY LIMESTONE; well lamin. (1) w/ some microbiot. (0/1); ol. gry. (2); Ino. frags.; abund. white fecal. pel. throughout; l. cont. grad. over 3 cm

Unit 39 - 15.5 cm; MARLSTONE to MARLY LIMESTONE; well lamin. (1) w/ some microbiot. (0/1); lt. ol. gry. (3); abund. white fecal pel. throughout; l. cont. sharp

MAA/WED/BBS - 6/92

CORE: AMOCO Rebecca K
Bounds #1

BOX # 4a

BOX FOOTAGE 559-568'

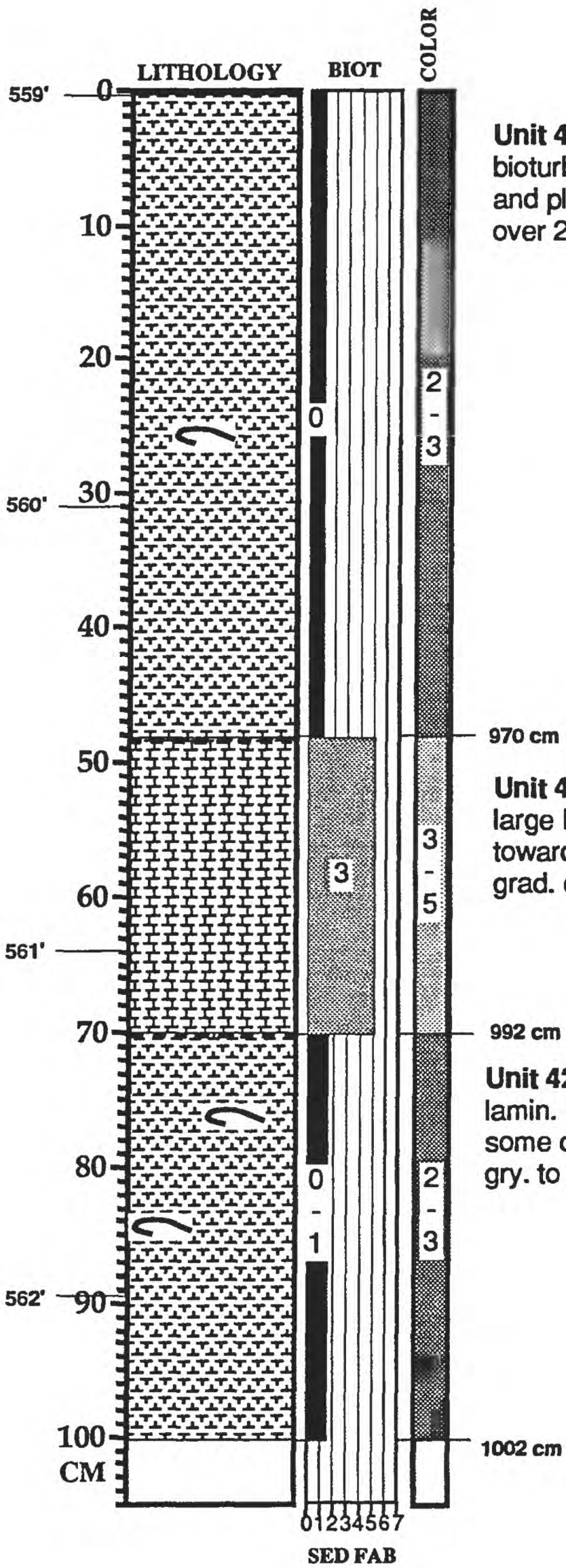

Unit 40 - 48 cm; MARLSTONE; well lamin. (1) w/ no bioturb. (0); ol. gry. to lt. ol. gry. (2/3); abund. fecal pel. and plank. forams; lno. debis @ 25 cm; l. contact grad. over 2 cm

Unit 41 - 22 cm; MARLY LIMESTONE; sli. biot. (5) w/ large Plano. burrows (3); becomes more laminated toward the bottom; lt. ol. gry. to v. lt. gry. (3/5); l. cont. grad. over 5 cm

Unit 42 - 61cm; MARLSTONE; well to mod. lamin. (0/1) mostly microbioturb. (0/1) w/ some discrete burrows in upper 12 cm; ol. gry. to lt. ol. gry. (2/3)

MAA/WED/BBS - 6/92

CORE: AMOCO Rebecca K
Bounds #1

BOX # 4b

BOX FOOTAGE 559-568

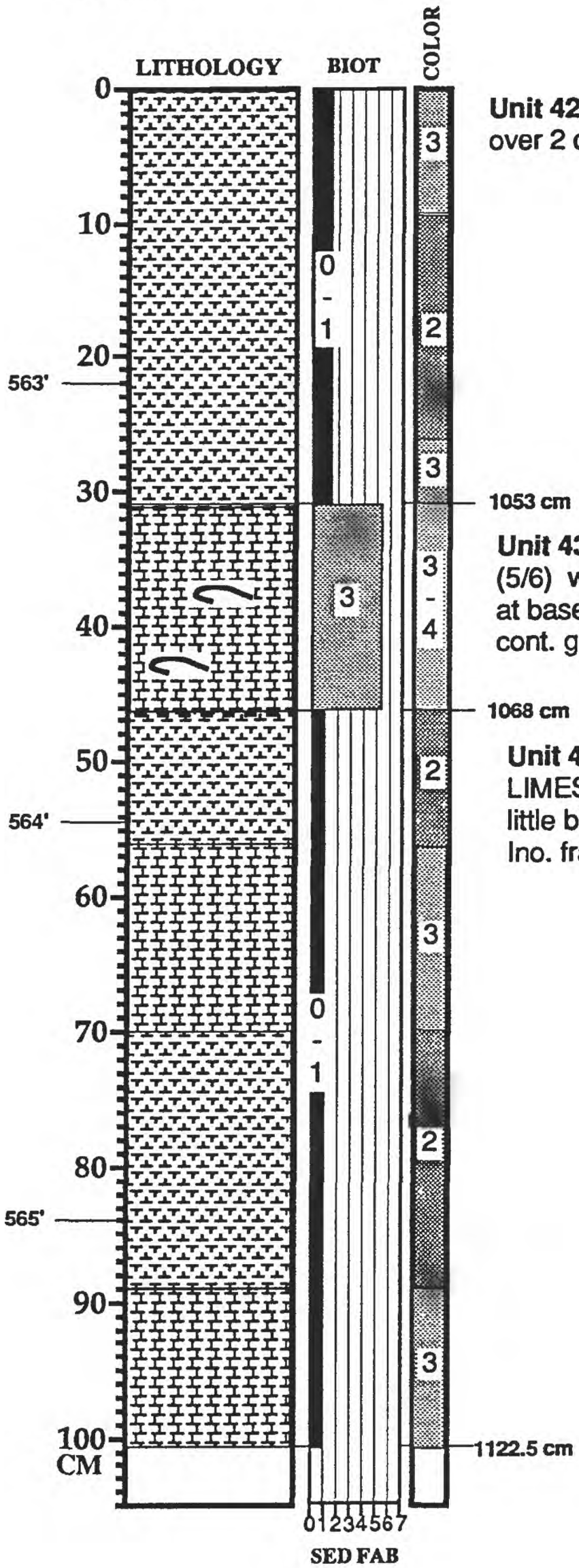

Unit 42 (cont.) - MARLSTONE as above; l. cont. grad. over 2 cm

Unit 43 - 15 cm; MARLY LIMESTONE; sli. to mod. biot. (5/6) w/ large Plano. burrows (3) grading to poor. lam. at base; lt. ol. gry. to yel. gry. (3/4); abund. Ino. frags.; l. cont. grad. over 2 cm

Unit 44 - 83.5 cm; MARLSTONE AND MARLY LIMESTONE alternating as color zones; well lam. (1) w/ little bioturb. (0/1); ol. gry. (2) and lt. ol. gry. (3); rare Ino. frags.; mod. to abund. fecal pel.

MAA/WED/BBS - 6/92

CORE: AMOCO Rebecca K
Bounds #1

BOX # 4c

BOX FOOTAGE 559-568

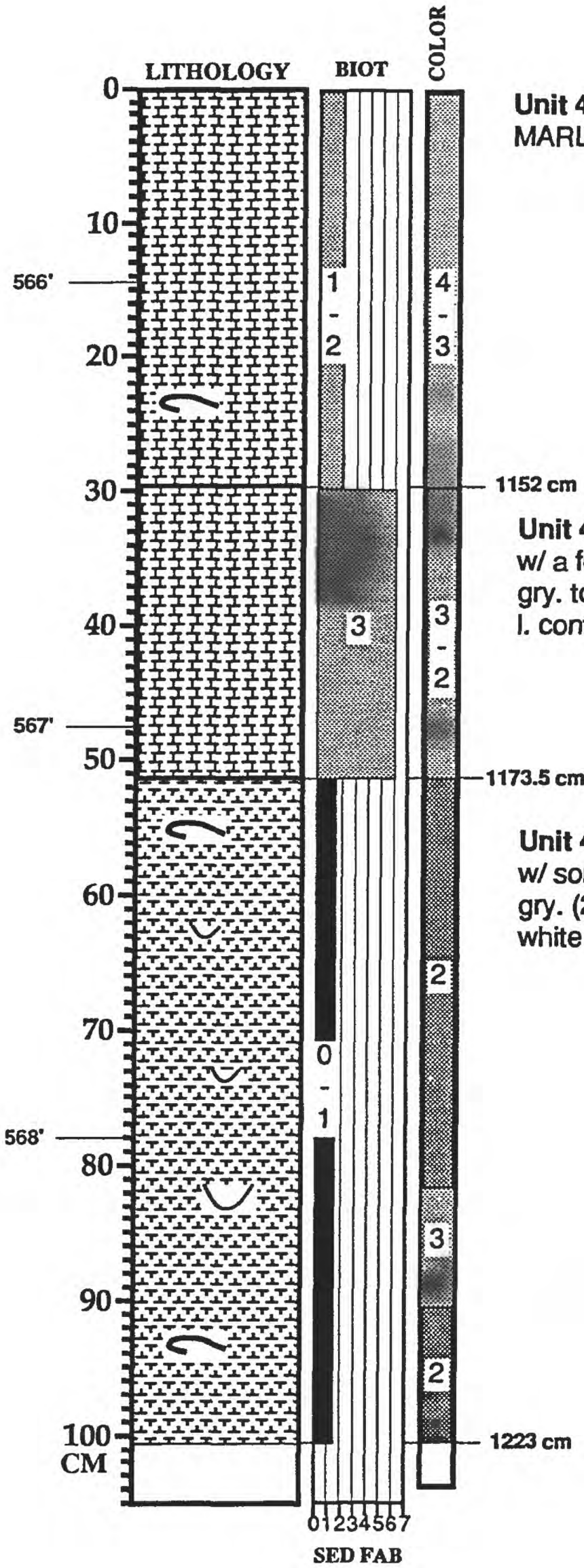

Unit 44 (cont.) - MARLY LIMESTONE and MARLSTONE as above; l. cont. sharp

Unit 45 - 21.5 cm; MARLY LIMESTONE; mod. biot. (6) w/ a few distinct large Plano. & Chond. burr. (3); lt. ol. gry. to ol. gry. (3/2); fecal pel. incr. toward bottom of unit; l. cont. sharp

Unit 46 - 57.5 cm; MARLSTONE; well to mod. lamin. (1/2) w/ some microbiot. (0/1); alt. zones of lt. ol. gry. (3) & ol. gry. (2); abund. white fecal. pel. throughout; Ino. frags. & white shells common

MAA/WED/BBS - 6/92

CORE: AMOCO Rebecca K
Bounds #1

BOX # 5a

BOX FOOTAGE 568-578'

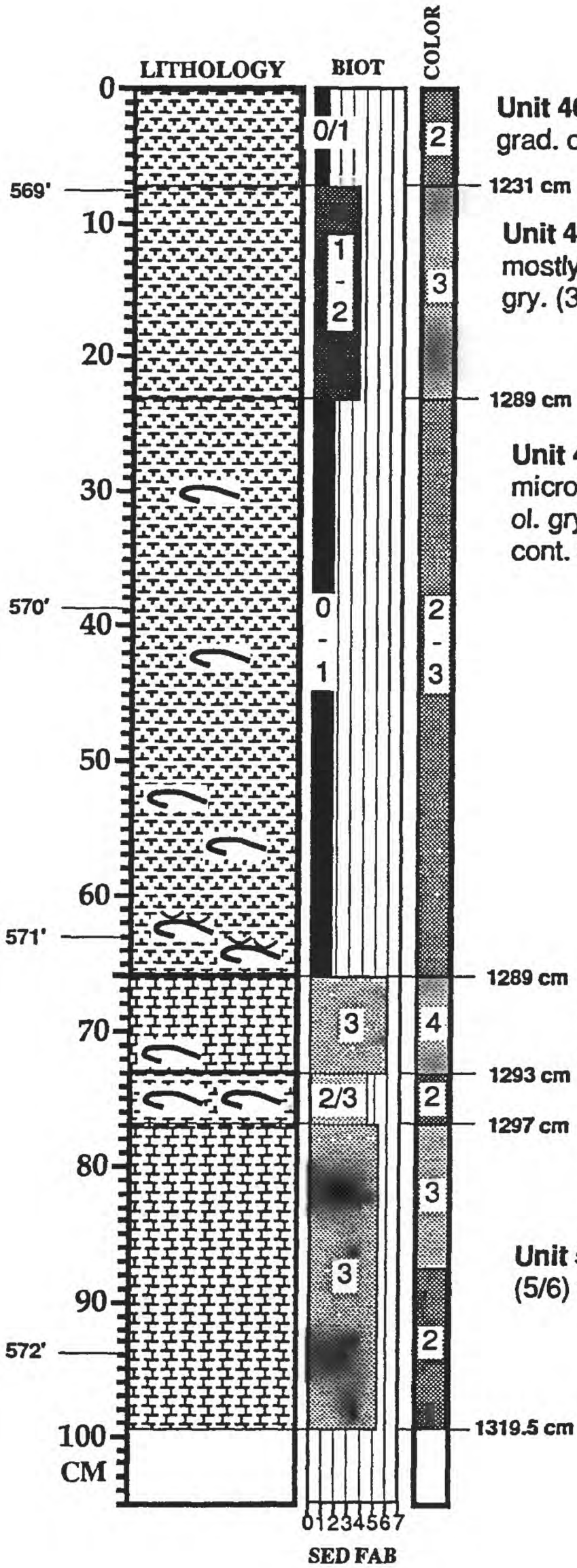

Unit 46 (cont.) - MARLSTONE; as above; l. contact grad. over 2 cm

Unit 47 - 15 cm; MARLSTONE; poor. lamin. to burr. (3/4); mostly microbioturb. w/ some small burrows (1/2); lt. ol. gry. (3); l. cont. grad. over 2 cm

Unit 48 - 43cm; MARLSTONE; well to mod. lamin. (1/2); microbioturb. or no evid. of trace fossils (0/1); lt. ol. gry. to ol. gry. (2/3); common Ino. shells; abund. fecal pel.; l. cont. sharp

Unit 49 - 7 cm; MARLY LIMESTONE; mod. biot. (6) w/ discrete large Plano. burrows (3); minor Ino. frags.; white fecal pel. not as abundant as in unit 48; yel. gry. (4); l. cont. sharp

Unit 50 - 4 cm; MARLSTONE; burr. to sl. bioturb. (4/5) w/ some discrete burrows (2/3); abund. Ino. frags.;abund. white fecal. pel.; ol. gry. (2); l. cont. grad. over 3 cm

Unit 51 - 32 cm; MARLY LIMESTONE; sli. to mod. biot. (5/6) w/ large burrows. (3); lt. ol. gry. (3) to ol. gry. (2)

MAA/WED/BBS - 6/92

CORE: AMOCO Rebecca K
Bounds #1

BOX # 5b
BOX FOOTAGE 568-578

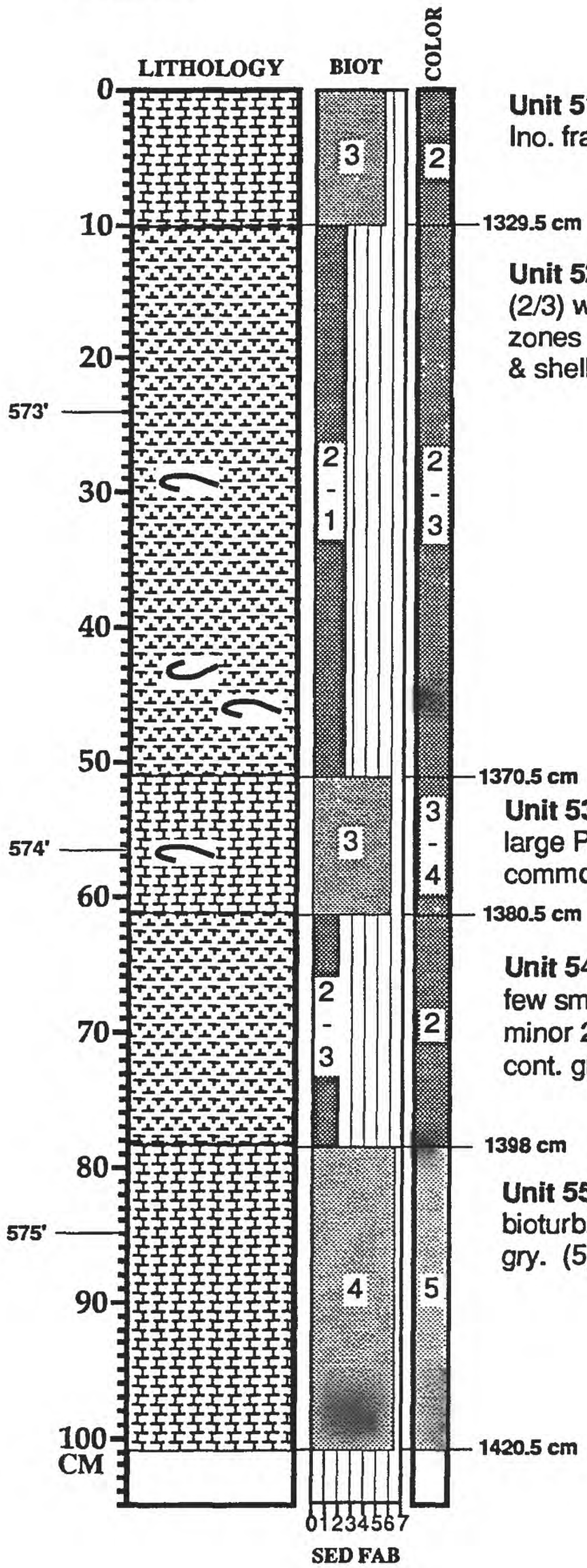

Unit 51 (cont.) - MARLY LIMESTONE as above; rare Ino. frags.; l. cont. grad. over 2 cm

Unit 52 - 41 cm; MARLSTONE; mod. to poor. lam. (2/3) w/ little bioturb. (2/1); alternating 3-5-cm color zones of ol. gry. (2) and lt. ol. gry. (3); abund. Ino. frags. & shells; l. cont. grad. over 4 cm

Unit 53 - 10 cm; MARLY LIMESTONE; mod. biot. (6) w/ large Plano. burrows (3); lt. ol. gry. to yel. gry. (3/4); common Ino. frags.; l. cont. grad. over 3 cm

Unit 54 - 17.5 cm; MARLSTONE; mod. well lam. (2) w/ a few small Chond. & Plano. burrows (2/3); ol. gry. (2) w/ minor 2-3 cm color variations; scattered oyster frags.; l. cont. grad. over 1 cm

Unit 55 - 25.5 cm; MARLY LIMESTONE; mod. to very bioturb. (6/7) w/ large Plano. & Teich. burrows (4); v. lt. gry. (5)

MAA/WED/BBS - 6/92

CORE: AMOCO Rebecca K Bounds #1

BOX # 5c

BOX FOOTAGE 568-578

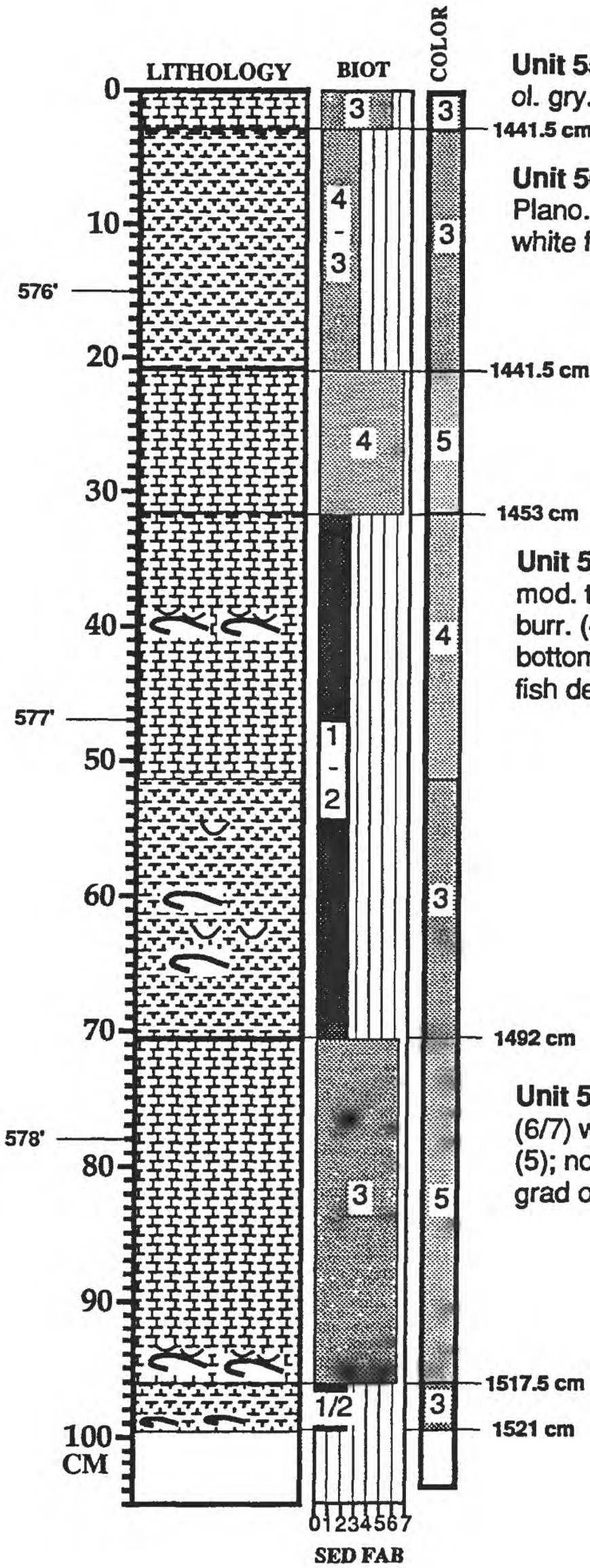

Unit 55 (cont.) - MARLY LIMESTONE as above; lt. ol. gry. (3); l. cont. grad over 3 cm

Unit 56 - 18 cm; MARLSTONE; poor. lamin. (3) w/ some Plano. & Teich. burrows (3/4); lt. ol. gry. (3); common white fecal. pel. throughout; l. cont. grad. over 2 cm

Unit 57 - 11.5 cm; MARLY LIMESTONE; mod. to very biot. (6/7) w/ distinct large Plano. & Teich. burr. (4); v. lt. gry. (5); rare fish debris; l. cont. grad over 2 cm

Unit 58 - 39 cm; MARLY LIMESTONE to MARLSTONE; mod. to very biot. (6/7) w/ distinct large Plano. & Teich. burr. (4); yel. gry. (4) top grading to lt. ol. gry. (3) at bottom; abund. shell frags.; oyster shell islands; common fish debris; l. cont. sharp

Unit 59- 25.5 cm; MARLY LIMESTONE mod. to very biot. (6/7) w/ distinct Plano. burr.& mottled fabric (3); v. lt. gry. (5); no shell debris except for shell islands at base; l. cont. grad over 6 cm

Unit 60 - 15 cm; MARLSTONE; mod. to poor. lamin. (2/3) w/ some microbiot. & small burr. (1/2); lt. ol. gry. (3); Ino. frags. at base of unit

MAA/WED/BBS - 6/92

CORE: AMOCO Rebecca K
Bounds #1

BOX # 6a

BOX FOOTAGE 578-588'

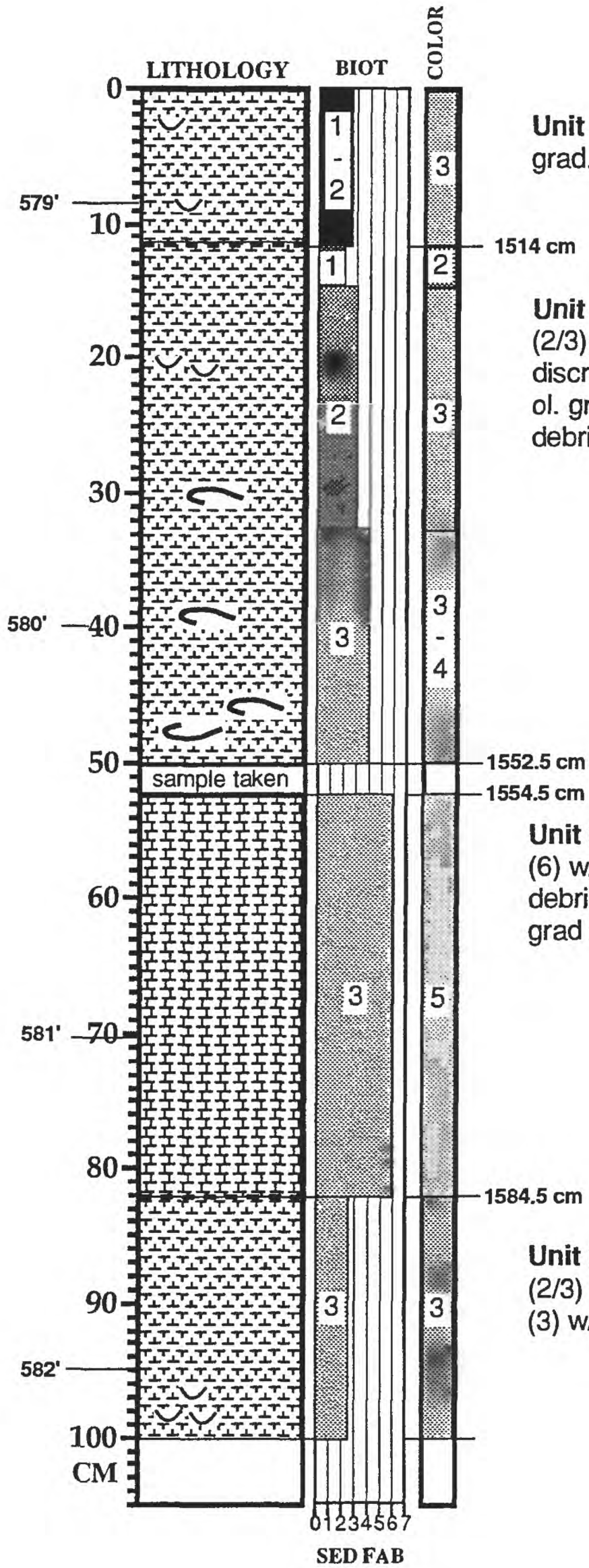

Unit 60 (cont.) - MARLSTONE; as above; l. contact grad. over 2 cm

Unit 61 - 38.5 cm; MARLSTONE; mod. lamin. to burr. (2/3); mostly microbioturb. w/ some small burrows (1/3); discrete Plano. burrows at 4cm, 27-29 cm; color zones of ol. gry. to yel gry. (2-4); common fish debris; common Ino. debris; commmon white fecal pel.; l. cont. sharp

Unit 62 - 2 cm; BENTONITE; l. cont. sharp

Unit 63 - 30 cm; MARLY LIMESTONE; mod. biot. (6) w/ large Plano./Chond. burrows (3); no vis. shell debris; minor white fecal pel.; v. lt. gry. (5); l. cont. grad over 4 cm

Unit 64 - 29.5 cm; MARLSTONE; poor. to mod. lam. (2/3) w/ large Plano. burrows.up to 8 cm (3); lt. ol. gry. (3) w/ lighter burrow fill

MAA/WED/BBS - 6/92

CORE: AMOCO Rebecca K
Bounds #1

BOX # 6b

BOX FOOTAGE 578-588

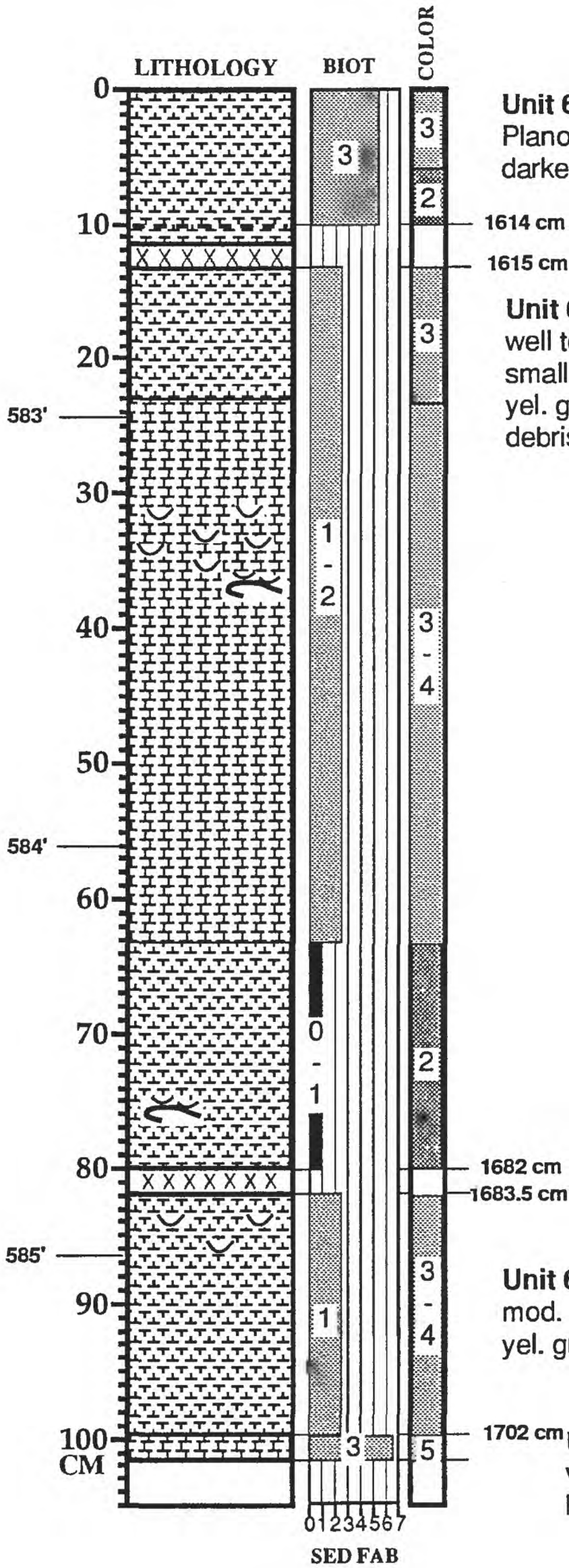

Unit 64 (cont.) - MARLSTONE as above; dist. large Plano. burrows near base; lt. ol. gry. (3) becomming darker (ol. gry; 2) at base; l. cont. sharp

Unit 65 - 1 cm; BENTONITE; not burrowed; med. gry.; l. cont. sharp

Unit 66 - 67 cm; MARLSTONE/MARLY LIMESTONE; well to mod. lam. (1/2) w/ little bioturb. as a few distinct small Plano burrows (1/2); alternating color zones of yel. gry. (4) and lt. ol. gry. (3); common fish and shell debris; l. cont. sharp

Unit 67 - 1.5 cm; BENTONITE; lt. gry.; l. cont. sharp

Unit 68 - 18.5 cm; MARLSTONE/MARLY LIMESTONE; mod. to poor. lamin. (2/3); microbioturb. (1); lt. ol. gry. to yel. gry. (3/4)

Unit 69 - 15 cm; MARLY LIMESTONE; mod. to very bioturb. (6/7) w/ large Plano. burrows (3); v. lt. gry. (5)

MAA/WED/BBS - 6/92

CORE: AMOCO Rebecca K
Bounds #1

BOX # 6c

BOX FOOTAGE 578-588

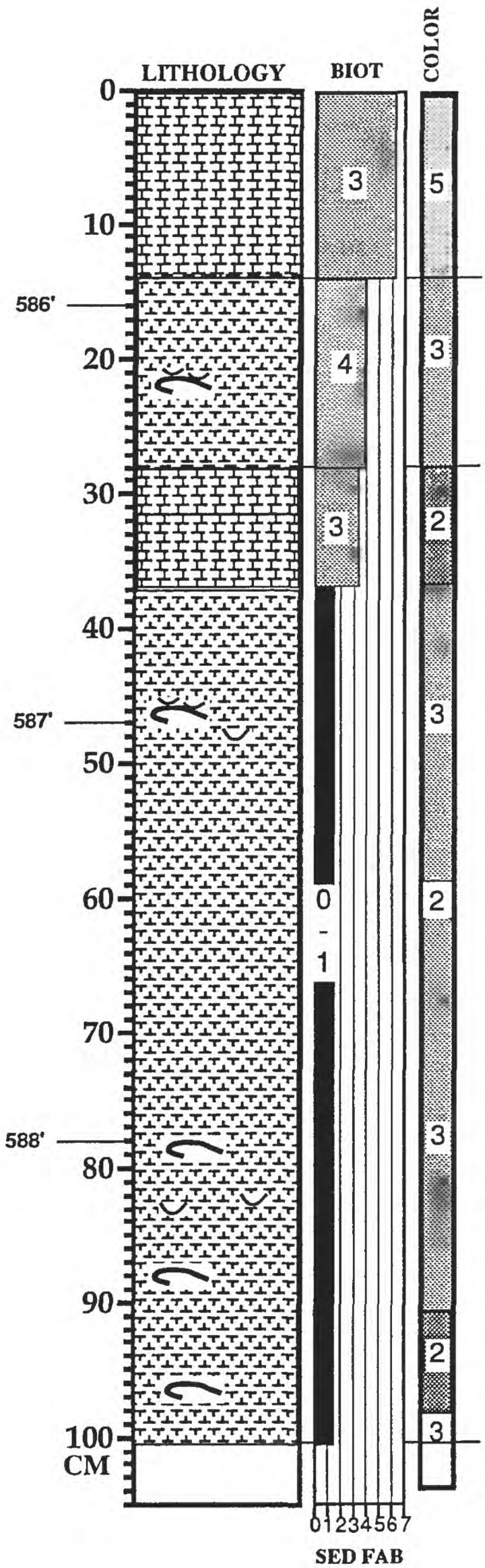

Unit 69 (cont.) - MARLY LIMESTONE as above; l. cont. grad. over 2 cm

Unit 70 - 14 cm; MARLSTONE to MARLY LIMESTONE; burrowed (4) w/ some Plano. & Teich. burrows (4); lt. ol. gry. (3); l. cont. grad. over 2 cm

Unit 71 - 74.5 cm; MARLY LIMESTONE to MARLSTONE; poor. lamin. to burrowed (3/4) w/ large Plano. burr. (4) in upper part to mod. to well lam. (1/2) w/ only microbioturb. (0/1) in lower part; alt. zones of ol. gry. (2) and lt. ol. gry. (3); common shells and shell frags.

MAA/WED/BBS - 6/92

CORE: AMOCO Rebecca K Bounds #1

BOX # 7a

BOX FOOTAGE 588-598'

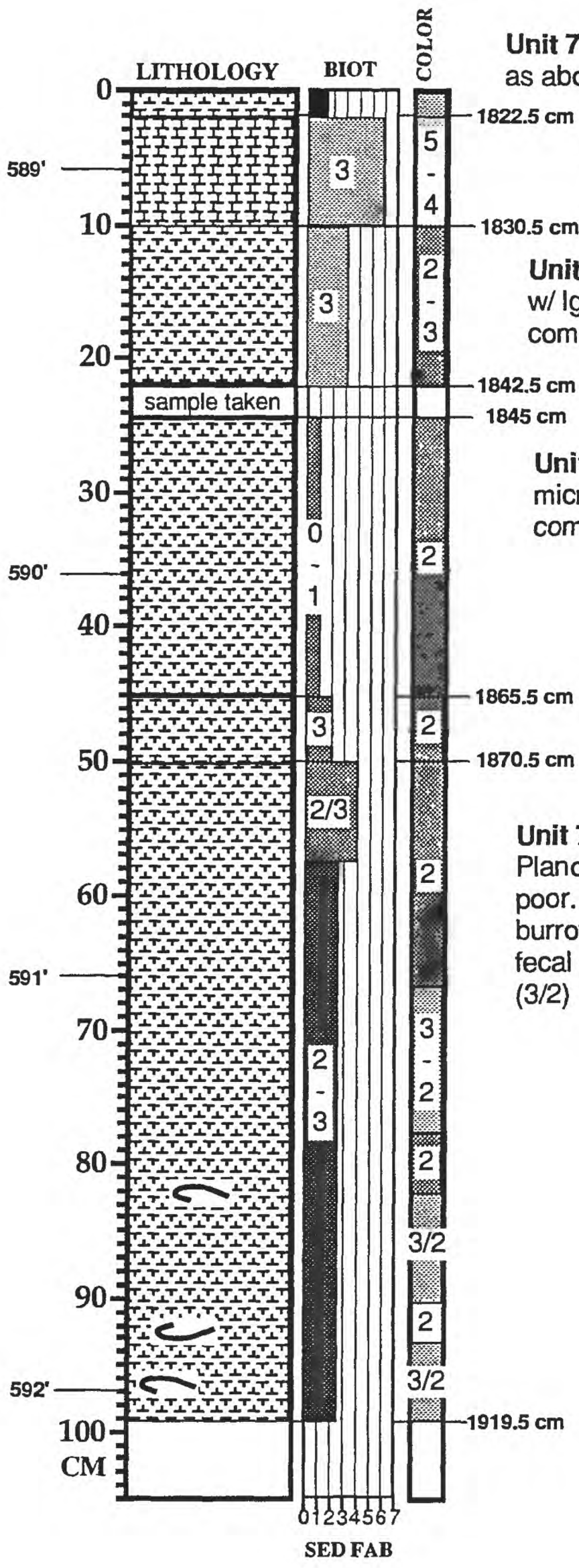

Unit 71 (cont.) - MARLY LIMESTONE to MARLSTONE as above; l. cont. sharp.

Unit 72 - 8 cm; MARLY LIMESTONE; mod. biot. (6) w/ large Plano./Chond. burrows (3); yel. gry. to v. lt. gry. (5/4); l. cont. sharp

Unit 73 - 12 cm; MARLSTONE; mod. lamin. to burr. (2/4) w/ lg. Plano. burrows (3); ol. gry. to lt. ol. gry. (2/3); common scat. Ino. debris; l. cont. sharp

Unit 74 - 2.5 cm; BENTONITE? (no indication of lith. in core box)

Unit 75 - 20.5 cm; MARLSTONE; well lamin. (1) w/ some microbioturb. (0/1); ol. gry. (2); common scat. Ino. frags; common fecal pel.; l. cont. sharp

Unit 76 - 5 cm; MARLSTONE; homog. w/ a few lg. Plano burrows (3); ol. gry. (2); common scat. Ino. frags, but no fecal pel.; l. cont. grad over 1 cm

Unit 77 -53.5 cm; MARLSTONE; burr. @ top (4)) w/ Plano./Chond. burrows (2/3) grading to mod. to poor. lamin. (2/3) w/ either microbioturb. or small burrows (1/3); abund. Ino. frags., common white fecal pel.; alt. color zones of ol. gry. (2) and lt. gry. (3/2)

MAA/WED/BBS - 6/92

CORE: AMOCO Rebecca K
Bounds #1

BOX # 7b

BOX FOOTAGE 588-598

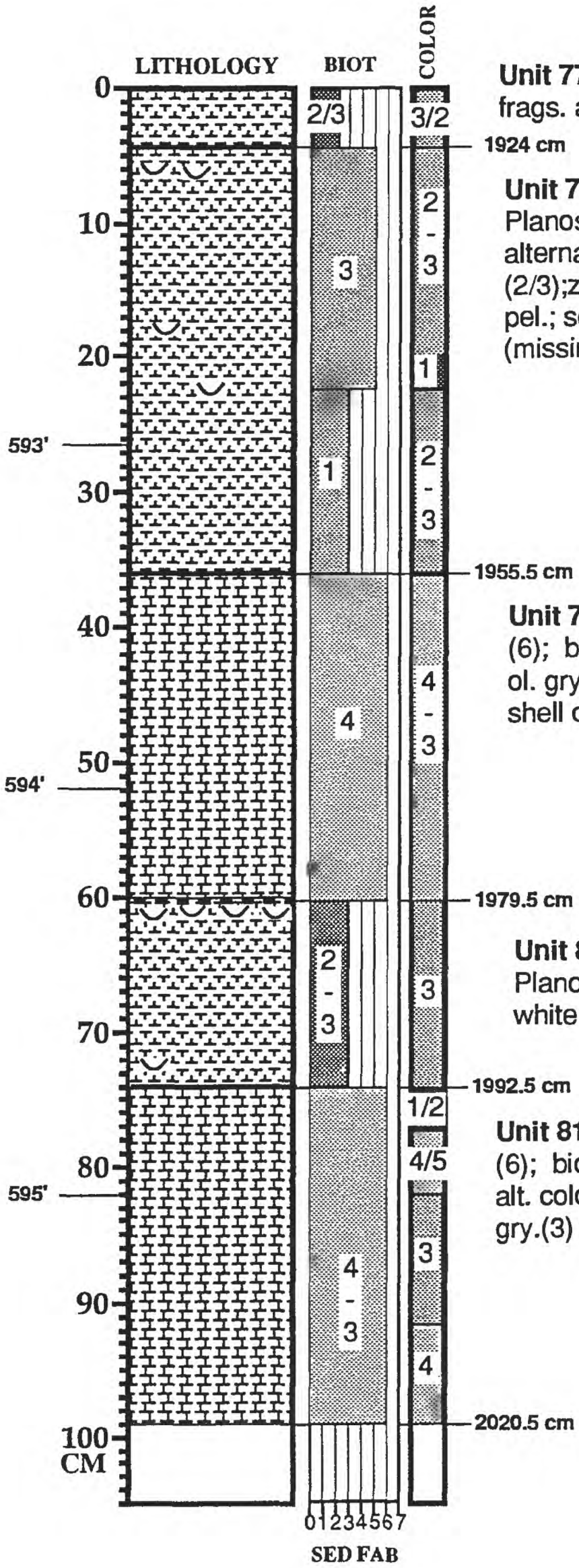

Unit 77 (cont.) - MARLSTONE as above; lno. frags. at top; l. cont. sharp

Unit 78 - 31.5 cm; MARLSTONE; sli. bioturb. (5) w/ lg. Planos. (3) to poor. lam. (3) and microbiot. (1) at base; alternating color zones of ol. blk. (1) and lt. ol. gry. (2/3);zone of med. gry. (bentonite) at top; common fecal pel.; scatered oyster and lno. shell debris; l. cont. sharp (missing core?)

Unit 79 - 24 cm; MARLY LIMESTONE; mod. bioturb. (6); bioturb.w. Plano, Chond., & Teich. burrows (4); lt. ol. gry. to yel. gry. (4/3) w/ some darker burrow fill; no shell debris; l. cont. grad. over 2 cm

Unit 80 - 13 cm; MARLSTONE; poor. lam. (3) w/ some Plano. & Chond. burrows (2/3); lt. ol. gry (3); abund. white fecal pel.; scattered shell debris; l. contact sharp

Unit 81 - 34 cm; MARLY LIMESTONE; mod. bioturb. (6); bioturb.w. Plano, Chond., & Teich. burrows (4/3); alt. color zones of dark ol. at top (1/2) becomming lt. ol. gry.(3) to yel. gry. (4) at base

MAA/WED/BBS - 6/92

CORE: AMOCO Rebecca K
Bounds #1

BOX # 7c

BOX FOOTAGE 588-598

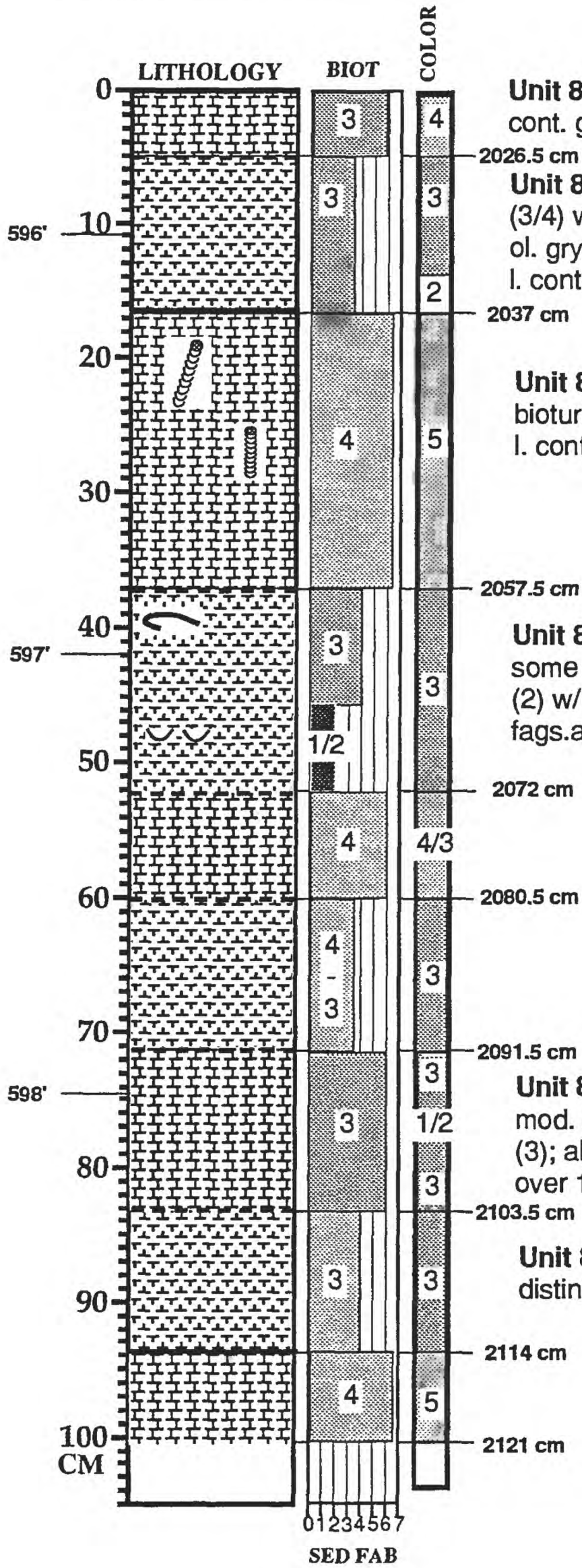

Unit 81 (cont.) - MARLY LIMESTONE as above; l. cont. grad. over 2 cm

Unit 82 - 10.5 cm; MARLSTONE; poor. lam. to burrowed (3/4) w/ some distinct Plano. burrows (3); lt. ol. gry. (3) to ol. gry. (2) at base; few Ino. fags.; abund. white fecal pel.; l. cont. sharp;

Unit 83 - 20.5 cm; MARLY LIMESTONE; mod. to very bioturb. (6/7) w/ common large Teich. burr. (4); v. l. gry. (5); l. cont. grad. over 2 cm

Unit 84 - 14.5 cm; MARLSTONE; top burrowed (4) w/ some distinct Plano. burrows (3) grading to mod. lamin. (2) w/ microbioturb. (1/2) at base; lt. ol. gry. (3); few Ino. fags.at top; oyster frags.; l. cont. grad. over 2 cm

Unit 85 - 8.5 cm; MARLY LIMESTONE; mod. bioturb. (6) w/ common large Teich. burr. (4); yel gry to l. ol. gry. (4/3); l. cont. grad. over 1 cm

Unit 86 - 11 cm; MARLSTONE to MARLY LIMESTONE; poor. lamin. to burrowed (3/4) w/ some distinct Plano., Chond., & Teich. burrows (4/3); lt. ol. gry. (3); rare shell frags.; l. cont. grad. over 3 cm

Unit 87 - 20.5 cm; MARLSTONE to MARLY LIMESTONE; mod. bioturb. (6) w/ common large Plano. & Chond. burr. (3); alt. colors of l. gry. (3) and dk. olive (1/2); l. cont. grad. over 1 cm

Unit 88 - 10.5 cm; MARLSTONE; burrowed (4) w/ some distinct Plano. burrows (3); lt. ol. gry. (3); l. cont. sharp

Unit 89 - 15 cm; MARLY LIMESTONE; mod. to very bioturb. (6/7) w/ common large Teich. burr. (4); v. lt. gry. (5); l. cont. grad. over 1 cm

MAA/WED/BBS - 6/92

CORE: AMOCO Rebecca K
Bounds #1

BOX # 8a
BOX FOOTAGE 598-609'

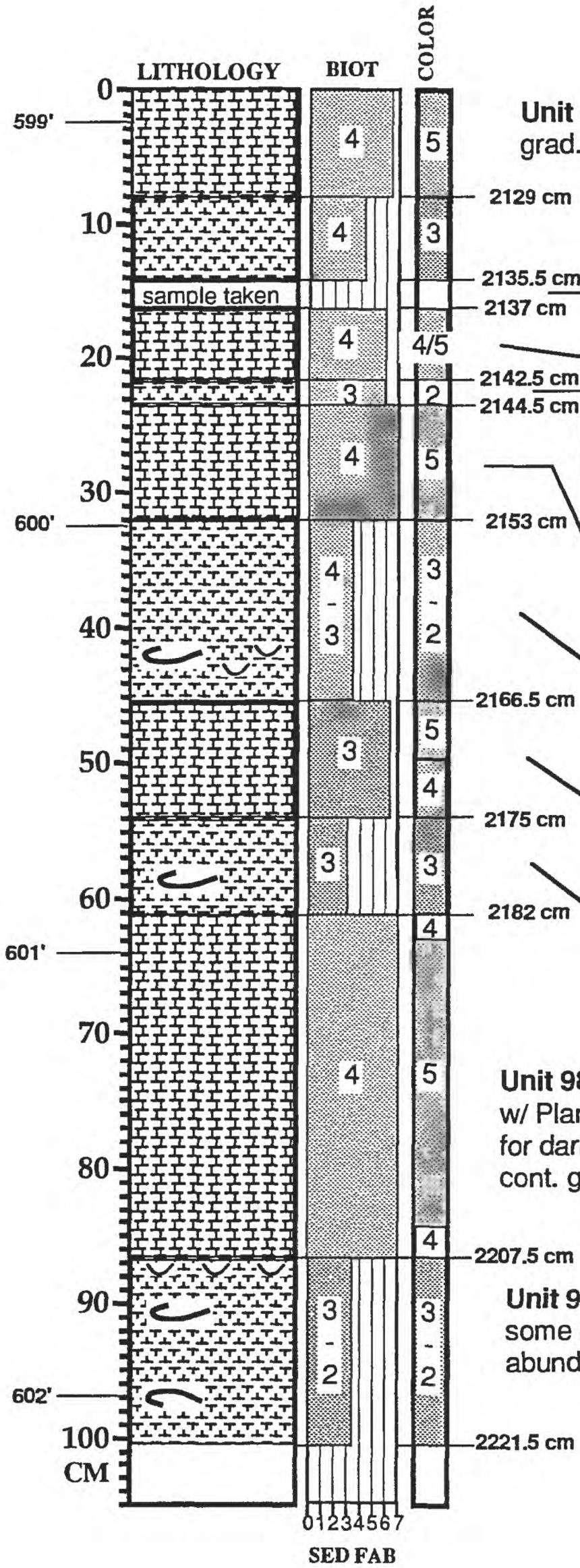

Unit 89 (cont.) - MARLY LIMESTONE as above; l. cont. grad. over 1 cm

Unit 90 - 6.5 cm; MARLSTONE; burrowed (4/5) w/ lg. Plano., Chond., & Teich. burrows (4); lt. ol. gry. (3); l. cont. sharp

Unit 91 - 1.5 cm; BENTONITE?; no indication of lithol. i n core box)

Unit 92 - 5.5 cm; MARLY LIMESTONE; mod. bioturb. (6) w/ Plano., Chond., & Teich. burrows (4); yel gry. to v. lt. gry. (4/5); rare fecal pel.; l. cont. grad over 2 cm

Unit 93 - 2 cm; MARLSTONE; mod. bioturb. (6) w/ Plano. burrows (4); ol. gry. (2); l. cont. grad. over 1 cm

Unit 94- 8.5 cm; MARLY LIMESTONE; highly bioturb. (7) w/ Plano., Chond., & Teich. burrows (4); v. lt. gry. (5); l. cont. grad over 1 cm

Unit 95 - 13.5 cm; MARLSTONE; mostly poor. lamin. (3/4) but some distinct burrows (4/3); lt. ol. gry. to ol. gry. (3/2); minor fecal pel.; common forams; commn oyster and lno. debris; l. cont. sharp

Unit 96 -8.5 cm; MARLY LIMESTONE; highly bioturb. (6/7) w/ large Plano./Chond. burrows (3); v. lt. gry. (5) grading down to yel. gry. (4)

Unit 97 - 7 cm; MARLSTONE to MARLY LIMESTONE; poor. lamin. (3) but some distinct burrows (3); lt. ol. gry.(3); some thin lno. debris; l. cont. grad. over 2 cm

Unit 98 - 25.5 cm; MARLY LIMESTONE; highly bioturb. (7) w/ Plano., Chond., & Teich. burrows (4); v. lt. gry. (5) except for darker (4) burrowed zones at top and bottom of bed; l. cont. grad over 3 cm;

Unit 99 - 14 cm; MARLSTONE; mostly poor. lamin. (3/4) but some distinct burrows (3/2); lt. ol. gry. to ol. gry. (3/2); abund. oyster and lno. debris; l. cont. sharp

MAA/WED/BBS - 6/92

CORE: AMOCO Rebecca K
Bounds #1

BOX # 8b

BOX FOOTAGE 598-609

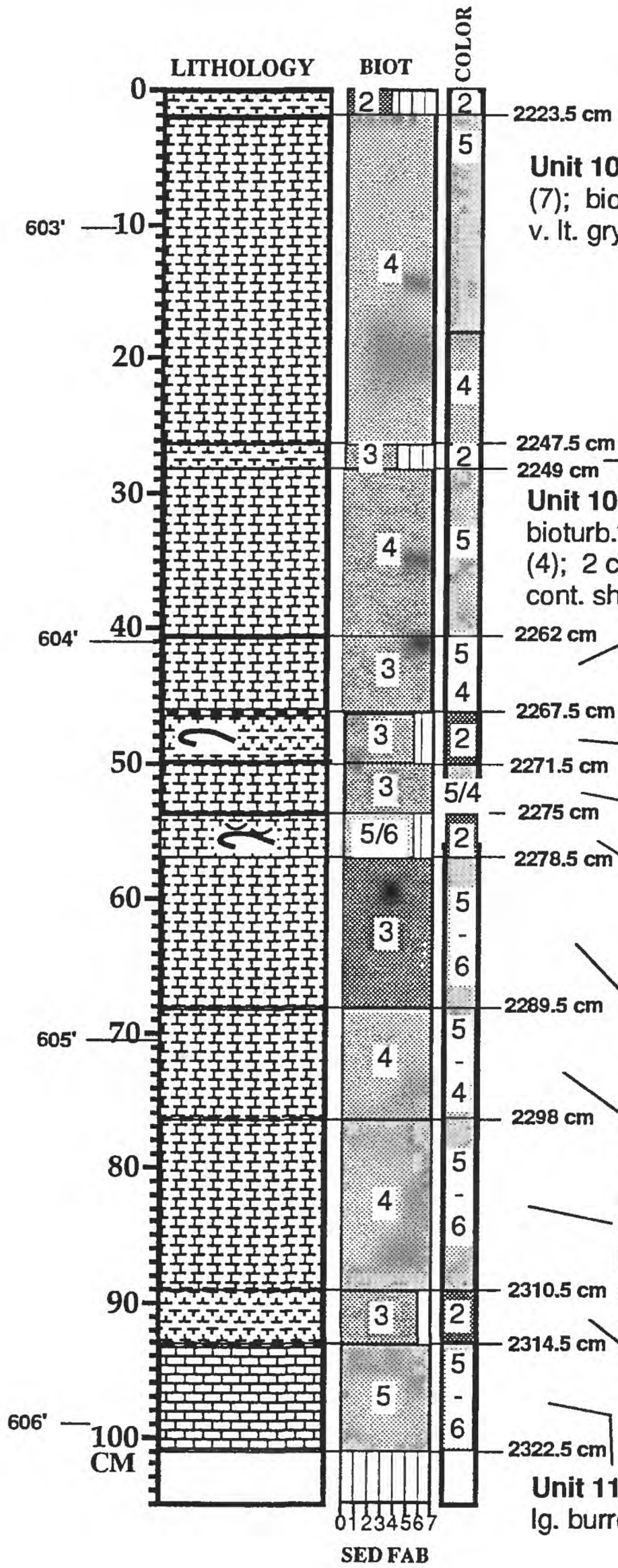

Unit 99 - 14 cm; MARLSTONE as above; l. cont. grad. over 1 cm

Unit 100 - 24 cm; MARLY LIMESTONE; very bioturb. (7); bioturb.w/ lg. Plano, Chond., & Teich. burrows (4); v. lt. gry. (5) grading to med. gry. (4); l. cont. sharp

Unit 101 - 1.5 cm; MARLSTONE; burr. (4) w/ some Plano. & Chond. burrows (3); ol. gry (2); l. contact sharp

Unit 102 - 13 cm; MARLY LIMESTONE; very bioturb. (7); bioturb.w/ lg. Plano, Chond.,Teich., & Thalass.? burrows (4); 2 cm of conc. Chond. burrows at base; v. lt. gry. (5); l. cont. sharp

Unit 103 - 5.5 cm; MARLY LIMESTONE; very bioturb. (7); w/ lg. Plano, Chond. burrows (4); v. lt. gry. (5) to yel. gry. (4); l. cont. grad. over 1 cm

Unit 104 - 4 cm; MARLSTONE; burr. (4) w/ Plano. & Chond. burrows (3); ol. gry (2); thin. Ino. debris; l. contact sharp

Unit 105 - 3.5 cm; MARLY LIMESTONE; very bioturb. (7); med. gry. (5/4); l. cont. sharp

Unit 106 - 3.5 cm; MARLY LIMESTONE; mod. bioturb. (5/6); med. gry. (5/4); oyster shell isl.; more fecal pel.; l. cont. sharp

Unit 107 - 11 cm; MARLY LIMESTONE; very bioturb. (7); v. lt. gry. (5/6); sln. seams at top of un it; l. cont. grad. over 3 cm

Unit 108 - 8.5 cm; MARLY LIMESTONE; very bioturb. (7); v. lt. gry to yel. gry. (5/4); flaser-type sln. seams at base of unit; l. cont. grad. over 3 cm

Unit 109 - 12.5 cm; LIMESTONE to MARLY LIMESTONE; very bioturb. (7); v. lt. gry. (5/6); strong flaser-type sln. seams at base of unit; l. cont. grad. over 2 cm

Unit 110 - 4 cm; MARLSTONE; mod. biot. (6) w/ discrete Plano. & Chond. burrows (3); ol. gry (2) w/ darker burrow fill; abund. flaser struct.; l. contact grad. over 1-2 cm

Unit 111 - 54 cm; LIMESTONE; very bioturb. (7); w/ v. lg. burrows of all types (5);v. lt. gry. (5/6)

MAA/WED/BBS - 6/92

CORE: AMOCO Rebecca K
Bounds #1

BOX # 8c

BOX FOOTAGE 598-609

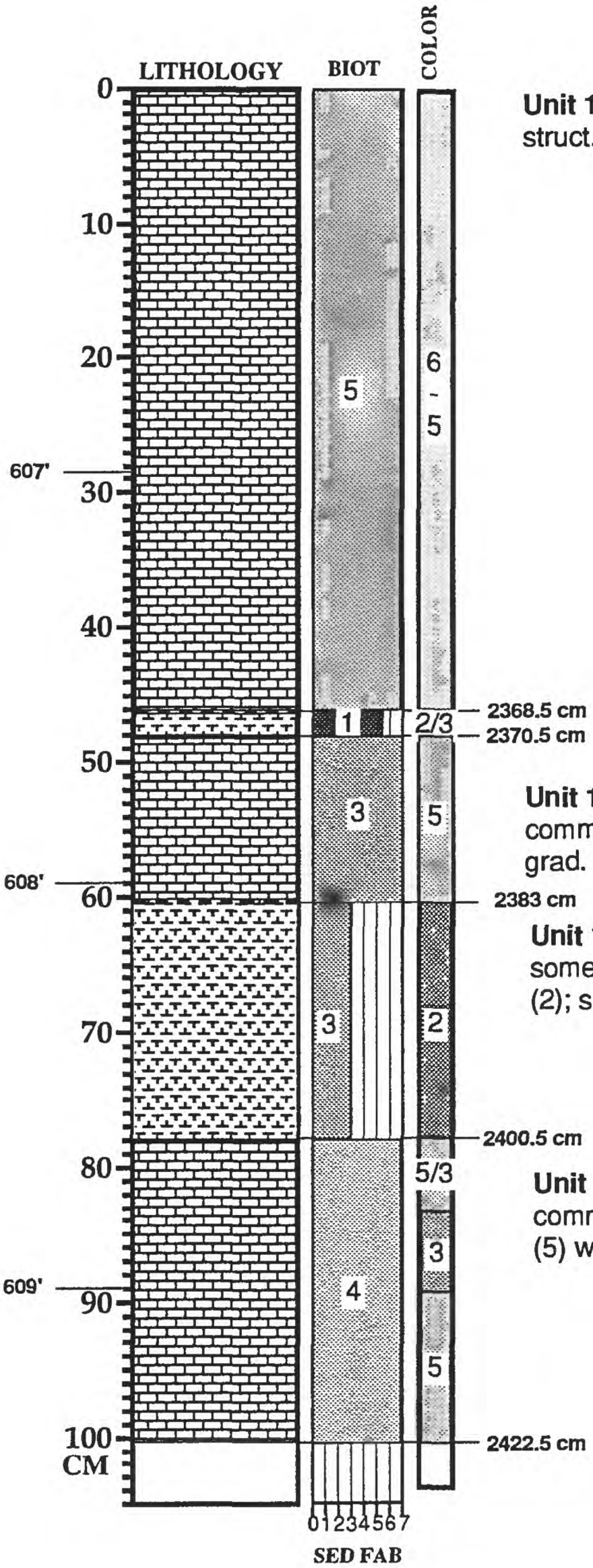

Unit 111 (cont.) - 54 LIMESTONE as above; minor flaser struct. at base; l. cont. grad over 1 cm

Unit 112 - 2 cm; MARLSTONE; sl. to mod. bioturb. (5/6) w/ some Chond. & Plano. burrows (2/3); ol. gry. to lt. ol. gry. (2/3); l. cont. sharp

Unit 113 - 12.5 cm; LIMESTONE; very bioturb. (7) w/ common large Plano. burrows (3); v. lt. gry. (5); l. cont. grad. over 1 cm

Unit 114 - 17.5 cm; MARLSTONE; poor. lamin. (3) w/ some discrete large Plano., Chond. burrows (3); ol. gry. (2); scattered shell frags.; l. cont. grad. over 1 cm

Unit 115 - 12.5 cm; LIMESTONE; very bioturb. (7) w/ common large Plano. & Teich. burrows (4); v. lt. gry. (5) w/ lt. ol gry. (3) to yel gry. (4) burrow fills

MAA/WED/BBS - 6/92

CORE: AMOCO Rebecca K
Bounds #1

BOX # 9a
BOX FOOTAGE 609'-619'

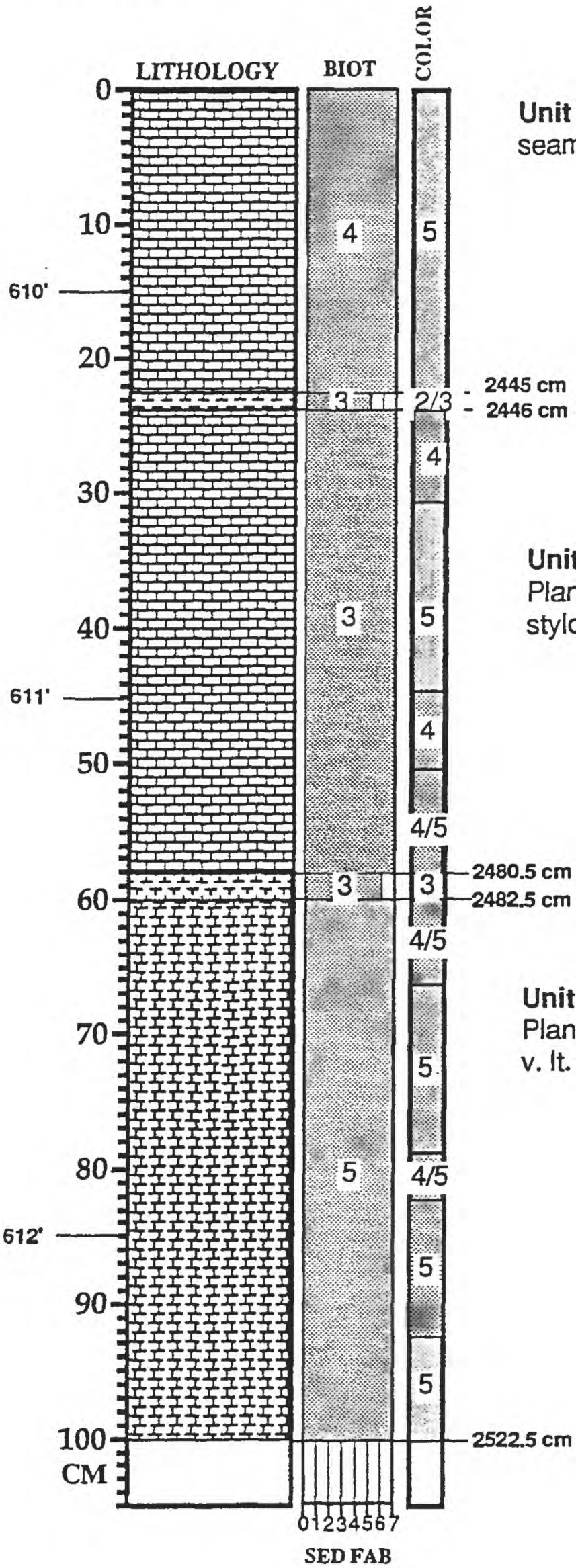

Unit 115 (cont.) - LIMESTONE as above; stylol. sln. seams in lower 8 cm; l. cont. sharp (missing core?)

Unit 116 - 1 cm; MARLSTONE; sli. bioturb. (5) w/ lg. Plano. burrows (3); ol. gry. to lt. ol. gry. (2/3); stylol. seams continue through from overlying unit; l. cont. sharp

Unit 117 - 34.5 cm; LIMESTONE; v. bioturb. (7) w/ lg. Plano. burrows (3); yel. gry. (4) to v. lt. gry. (5); abund. stylol. sln. seams in upper 8 cm; l. cont. sharp

Unit 118 - 2 cm; MARLSTONE; mod. biot. (6) w/ lg. Plano. burrows (3); lt. ol. gry. (3); l. cont. grad. over 1 cm

Unit 119 - 122.5 cm; LIMESTONE; v. bioturb. (7) w/ lg. Plano., Teich., Thal., & Zoophy. burrows (5); yel. gry. (4) to v. lt. gry. (5), grading to white (6) at base

MAA/WED/BBS - 6/92

CORE: AMOCO Rebecca K
Bounds #1

BOX # 9b

BOX FOOTAGE 609-619'

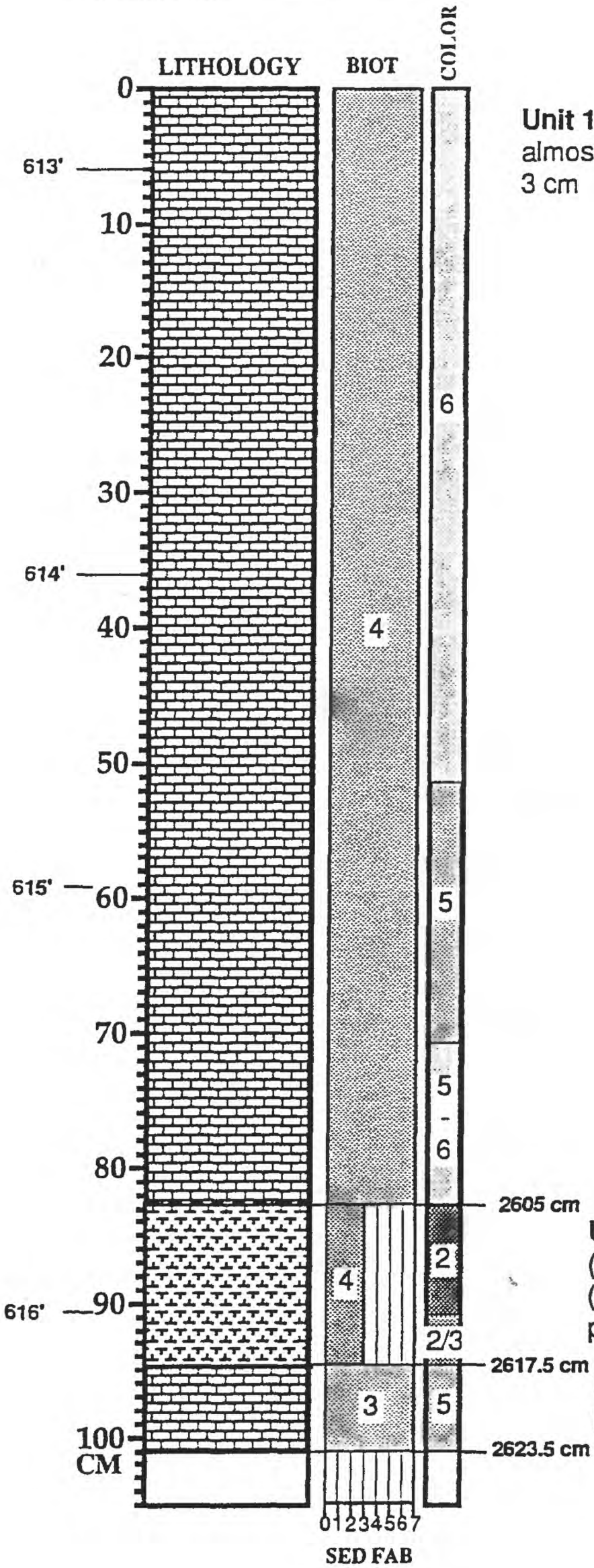

Unit 119 (cont.) - LIMESTONE as above; v. bioturb. (7) to almost homogeneous (0); no shell debris; l. cont. grad over 3 cm

Unit 120 - 12.5 cm; MARLSTONE; poor. lamin. (3) w/ discrete Plano., Chond., & Teich. burrows (4); ol. gry (2) w/ lighter burrow fill (3); white fecal pel. in upper part; l. contact sharp

Unit 121 - 9 cm; LIMESTONE; very bioturb. (7) w/ lg. Plano. & Chond. burows (3); v. lt. gry. (5)

MAA/WED/BBS - 6/92

CORE: AMOCO Rebecca K
Bounds #1

BOX # 9c

BOX FOOTAGE *609-619*

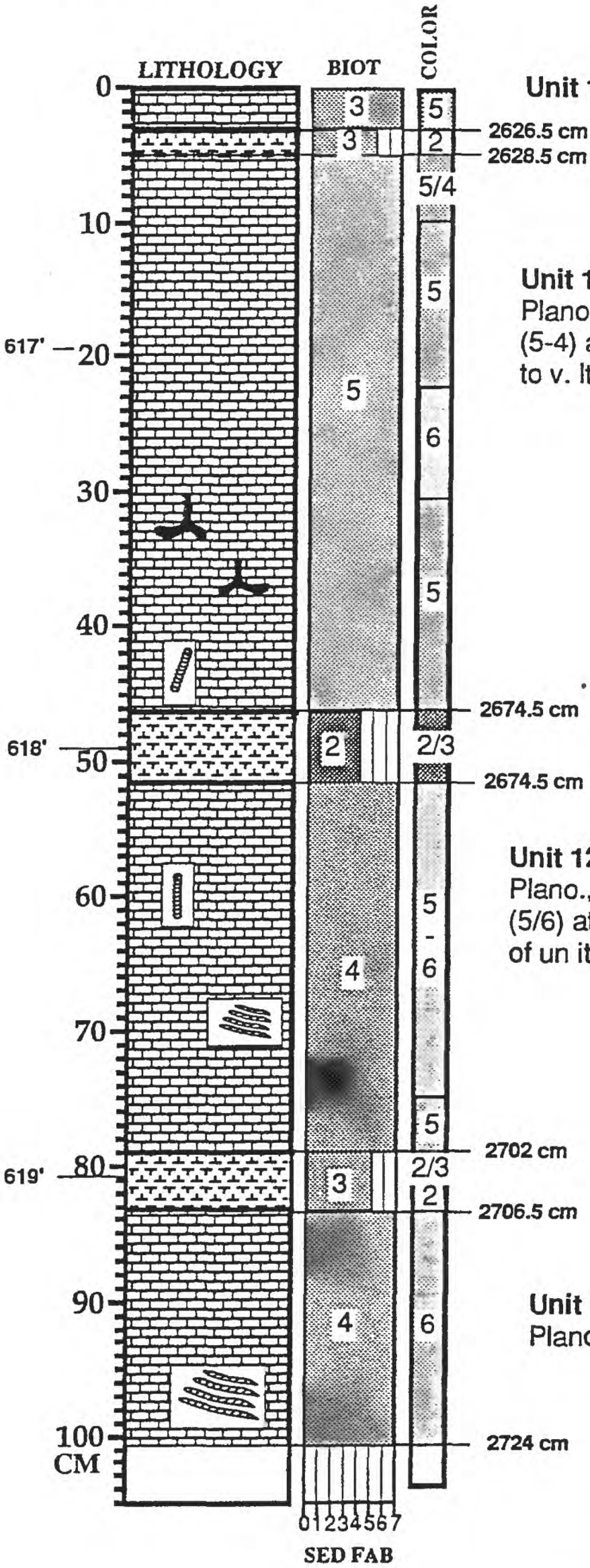

Unit 121 (cont.) - LIMESTONE as above; l. cont. sharp

Unit 123- 2 cm; MARLSTONE; sl. bioturb. (5) w/ lg. Chond. & Plano. burrows (3); ol. gry. (2); l. cont. grad. over 0.5 cm

Unit 123 - 40 cm; LIMESTONE; very bioturb. (7) w/ lg. Plano., Teich., & Thal. burows (5); yel. gry. to v. lt. gry. (5-4) at top grading to white (6) in middle of unit then back to v. lt. gry. (5); stylol. seams at top of unit; l. cont. sharp

Unit 124 - 6 cm; MARLSTONE; burrowed (4) w/ some small Chond. & Plano. burrows (2); ol. gry. to lt. ol. gry. (2/3); l. cont. sharp

Unit 125 - 27.5 cm; LIMESTONE; very bioturb. (7) w/ lg. Plano., Teich., & Zooph. burows (4); v. lt. gry. to white (5/6) at top grading to v. lt. gry. (5); stylol. seams at base of un it; l. cont. sharp

Unit 126 - 4.5 cm; MARLSTONE; sli. biot. (5) w/ Chond. & Plano. burrows (3); ol. gry. to lt. ol. gry. (2/3); l. cont. sharp

Unit 127 - 25.5 cm; LIMESTONE; very bioturb. (7) w/ lg. Plano., Teich., & Zooph. burows (4); white (6)

MAA/WED/BBS - 6/92

CORE: AMOCO Rebecca K
Bounds #1

BOX # 10a
BOX FOOTAGE 619-629'

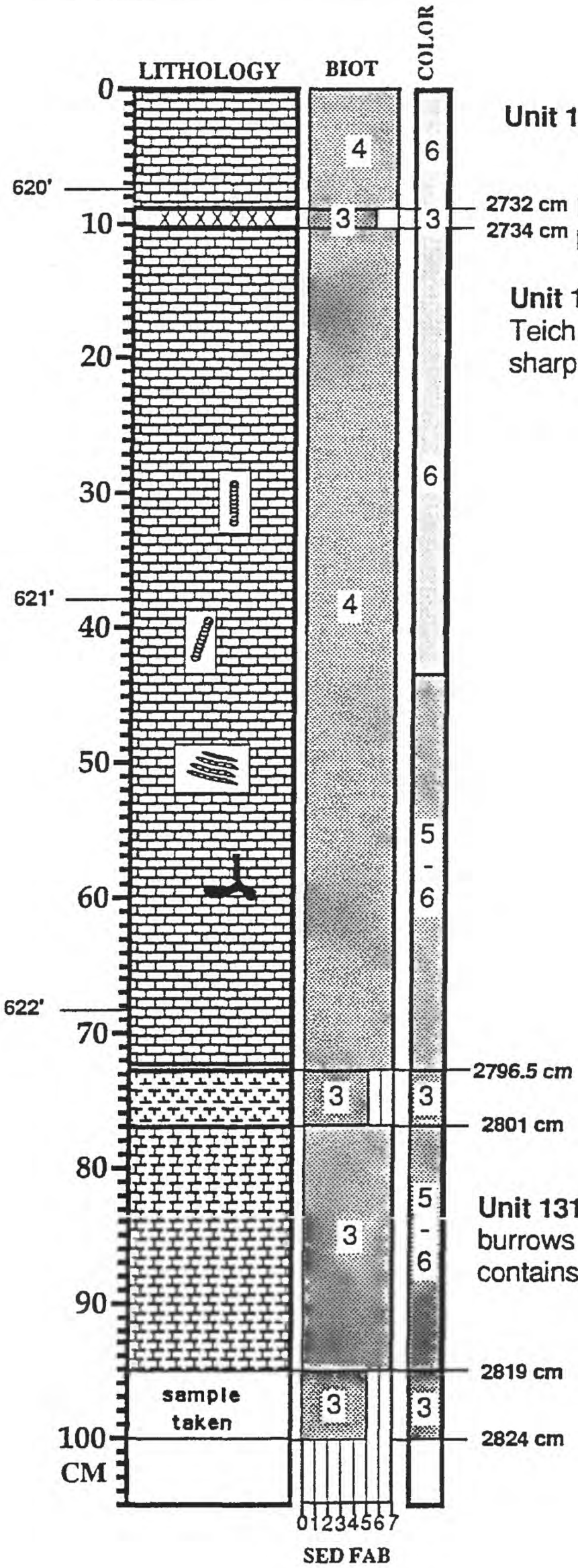

Unit 127 (cont.) - LIMESTONE; as above

Unit 128 - 2 cm; BENTONITIC CLAY; sli. to mod. bioturb. (5-6); lt. ol. gry. (3)

Unit 129 - 62.5 cm; LIMESTONE; v. bioturb. (7) w/ lg. Plano., Teich., & Zooph. burrows (4); white (6) to v. lt. gry. (5); l. cont. sharp but lower 3 cm contains stylol. seams

Unit 130- 24.5cm; MARLSTONE or BENTONITIC CLAY; sli. biot. (5) w/ lg. Plano. burrows (3); lt. ol. gry. (3); l. cont. sharp but stylolitic

Unit 131 - 18 cm; LIMESTONE; v. bioturb. (7) w/ lg. Plano. burrows (3); white to v. lt. gry. (5/6); l. cont. sharp but contains stylol. seams

Unit 132 - 8 cm; BENTONITIC CLAY?; sli. biot. (5) w/ lg. Plano. burrows (3); lt. ol. gry. (3)

MAA/WED/BBS - 6/92

CORE: AMOCO Rebecca K
Bounds #1

BOX # 10b

BOX FOOTAGE 619-629'

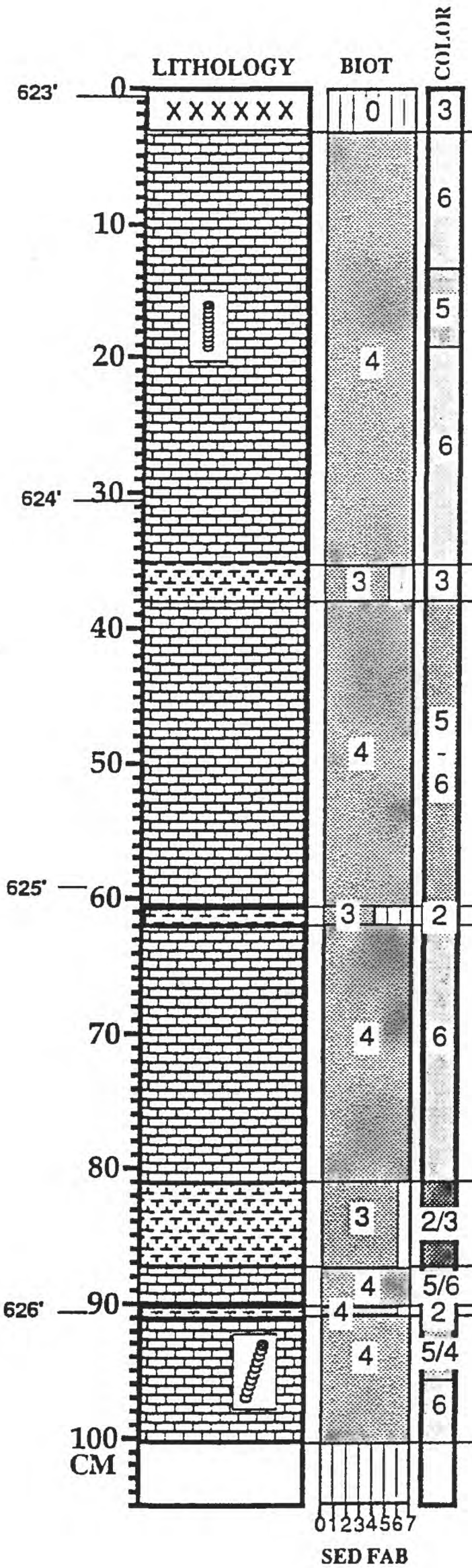

Unit 132 (cont.) - BENTONITIC CLAY?; l. cont. sharp

Unit 133 - 33 cm; LIMESTONE; v. bioturb. (7) w/ large Plano., Teich., & Zooph. burrows (4); white (6) to v. lt. gry. (5); l. cont. grad over 1 cm w/ stylol. seams

Unit 134 - 2 cm; MARLSTONE; sli. bioturb. (5) w/ Plano. & Chond. burrows (3) and abund. stylol. seams; lt. ol. gry (3); l. contact grad. over 1 cm

Unit 135 - 22.5 cm; LIMESTONE; v. bioturb. (7) w/ large Plano., Teich., & Zooph. burrows (4); white to v. lt. gry. (5/6); greenish stylol. seams at top and bottom; l. cont. sharp

Unit 136 - 1 cm; MARLSTONE; burrowed (4) w/ Plano. & Chond. burrows (3); ol. gry (2); l. contact sharp

Unit 137 - 19.5 cm; LIMESTONE; v. bioturb. (7) w/ large Plano., Teich., & Zooph. burrows (4); white (6); greenish stylol. seams at base; lno. frags. at base; l. cont. sharp

Unit 138 - 5 cm; MARLSTONE; mod. bioturb. (6) w/ Plano. & Chond. burrows (3); ol. gr. to lt. ol. gry. (2/3); l. contact sharp

Unit 139 - 4 cm; LIMESTONE; v. bioturb. (7) w/ large Plano., Teich., & Zooph. burrows (4); white to v. lt. gry. (5/6); lno. frags. at base; l. cont. sharp

Unit 140 - 1 cm; MARLSTONE; mod. bioturb. (6) w/ Plano. & Chond. burrows (4); ol. gr. (2); l. contact sharp

Unit 141 - 39.5 cm; LIMESTONE; very bioturb. (7) w/ lg. Plano. & Teich. burrows (4); med. gry. (5/4) to white (6)

MAA/WED/BBS - 6/92

CORE: AMOCO Rebecca K
Bounds #1

BOX # 10c
BOX FOOTAGE 619-629

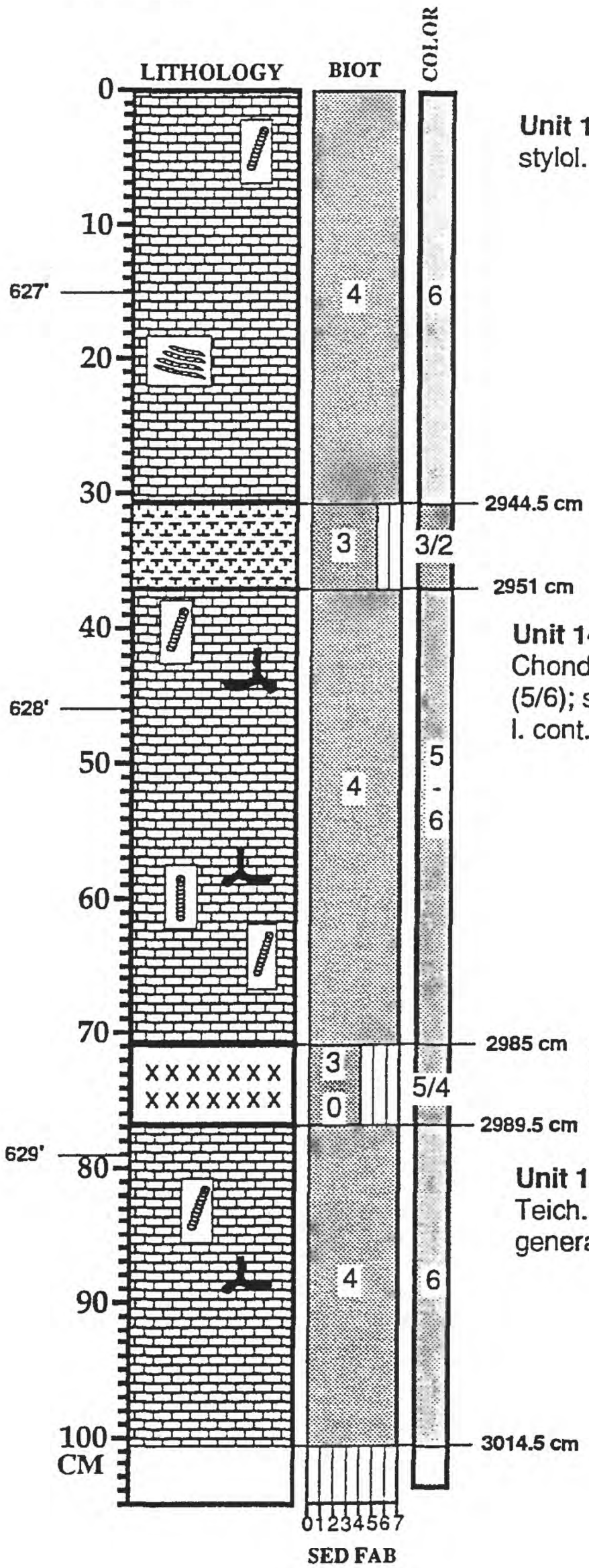

Unit 141 (cont.) - LIMESTONE as above; numerous stylol. seams w/ greenish color; l. cont. sharp

Unit 142 - 6.5 cm; MARLSTONE; sli. bioturb. (5)) w/ Chond. & Plano. burrows (3); ol. gry. to lt. ol. gry. (2/3); l. cont. sharp

Unit 143 - 34 cm; LIMESTONE; very bioturb. (7) w/ lg. Chond., Plano., & Teich. burrows (4); v. lt. gry. to white (5/6); stylol. seams w/ greenish cast; scattered Ino. frags.; l. cont. sharp

Unit 144 - 4.5 cm; BENTONITE; homogen. to burrowed (4-0) w/ Chond. & Plano. burrows (3); lt. gry. (5/4); l. cont. sharp

Unit 145 - 58 cm; LIMESTONE; very bioturb. (7) w/ lg. Teich. burrows reworked by Plano. & Chond. in multiple generations (4); white (6)

MAA/WED/BBS - 6/92

CORE: AMOCO Rebecca K
Bounds #1

BOX # 11a
BOX FOOTAGE 629-639'

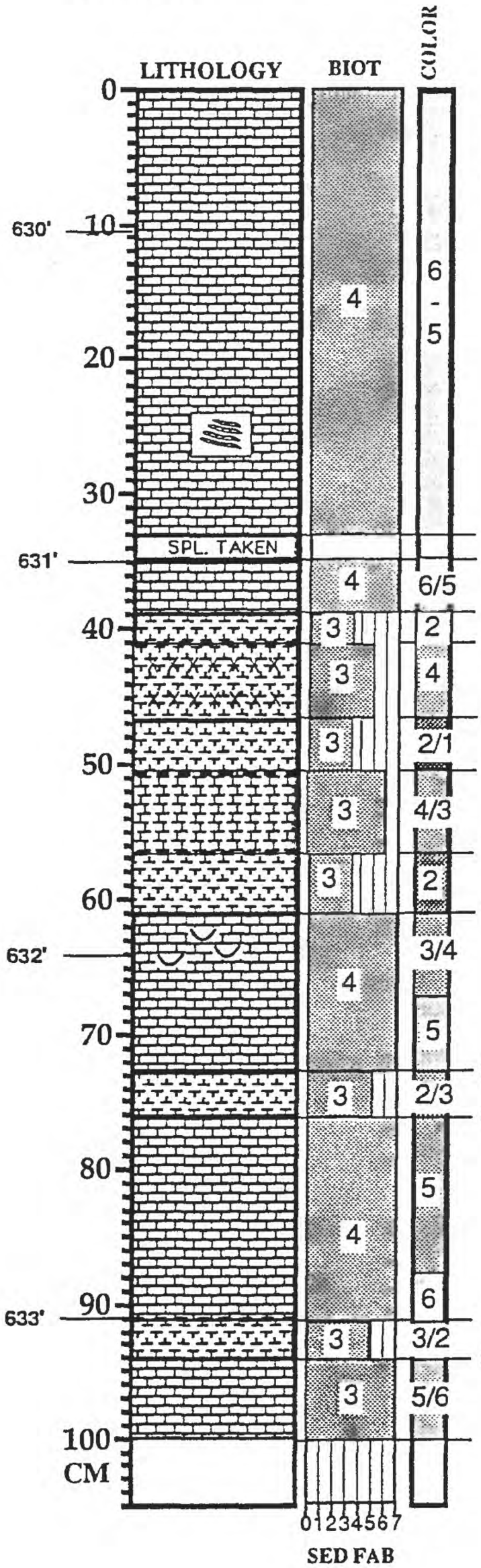

Unit 145 (cont.) - LIMESTONE as above; abundant zooph. burrows.; rare Ino. frags.; pyrite in burrow fillings; l. contact sharp

Unit 146- 2 cm; BENTONITE?; no lithologic information

Unit 147 - 4 cm; LIMESTONE; same as Unit 145; l. cont. sharp

Unit 148 - 2 cm; MARLSTONE; poor. lamin to burr. (3/4); ol. gry. (2); l. cont. grad. over 1 cm

Unit 149 - 5.5 cm; BENTONITIC CLAY-MARLSTONE; sli. biot. (5) w/ lg. Plano. burrows (3); yel. gry. (4); l. contact. sharp

Unit 150 - 4 cm; MARLSTONE; poor. lamin to burr. (3/4); ol. gry. to ol. blk. (2/1); l. cont. grad. over 2 cm

Unit 151 - 6 cm; MARLY LIMESTONE; mod. bioturb. (6) w/ lg.Plano. burrows (3); yel. gry. to lt. ol. gry. (4/3); l. cont. grad. over 1 cm

Unit 152 - 4.5 cm; MARLSTONE; poor. lamin to burr. (3/4); ol. gry. (2); l. cont. grad. over 2 cm

Unit 153 - 12 cm; LIMESTONE - MARLY LIMESTONE; very bioturb. (7) w/ lg.Chond., Plano., & Teich. burrows (4); upper part yel. gry. to lt. ol. gry. (3/4), lower part v. lt. gry. (5); oyster debris in upper part; l. cont. grad. over 1 cm

Unit 154 - 3 cm; MARLSTONE; sli. bioturb.; ol. gry. to lt. ol. gry (2/3); l. cont. sharp

Unit 155 - 15 cm; LIMESTONE; v. bioturb. (7) w/ lg. Plano. & Teich. burrows (3); v. lt. gry. at top (5) grading to yel. gry. (4) at base; stylol. seams at base; Ino. frags. in lower 1 cm; cont. grad. over 3 cm

Unit 156 - 3 cm; MARLSTONE; sli. bioturb.; ol. gry. to lt. ol. gry (2/3); l. cont. sharp

Unit 157 - 67 cm; LIMESTONE (see box 11b)

MAA/WED/BBS - 6/92

CORE: AMOCO Rebecca K
Bounds #1

BOX # 11b

BOX FOOTAGE 629-639'

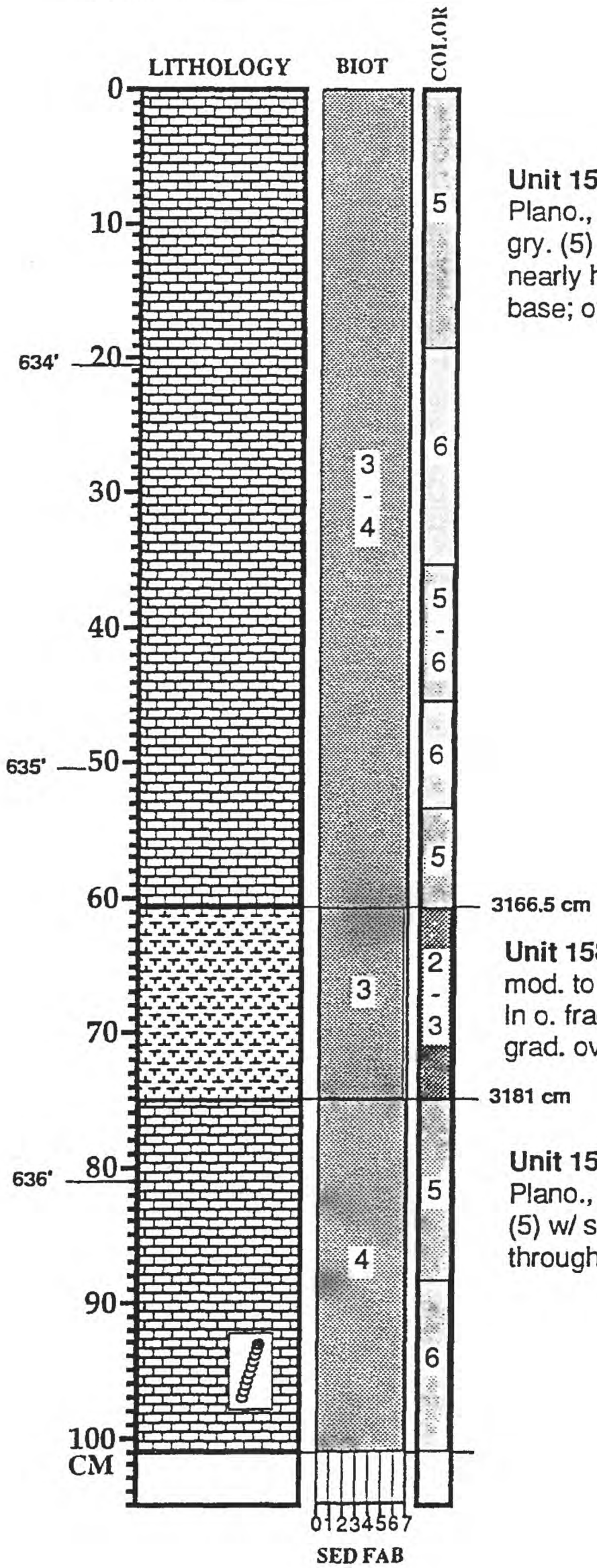

Unit 157 - 67 cm; LIMESTONE; v. bioturb. (7) w/ large Plano., Teich., & Zooph. burrows (3/4); white (6) to v. lt. gry. (5) in color cycles determined by burrow fill; 21-34 cm nearly homogenous; lno. frags. @ 4.5, 9, 39-42cm and at base; oyster frags at base; l. cont. grad. over 2 cm

Unit 158 - 14.5 cm; MARLSTONE, possibly bentonitic; mod. to very bioturb. (6/7) w/ Plano. & Chond. burrows (3) ln o. frags. throughout; ol. gry. to lt. ol. gry (2/3); l. contact grad. over 1 cm

Unit 159 - 76.5 cm; LIMESTONE; v. bioturb. (7) w/ large Plano., Teich., & Zooph. burrows (4); white (6) to v. lt. gry. (5) w/ some dark streaks and burrows; lno. frags. w/ pyrite throughout, but particularly concentrated at 83 cm

MAA/WED/BBS - 6/92

CORE: AMOCO Rebecca K
Bounds #1

BOX # 11c
BOX FOOTAGE 629-639

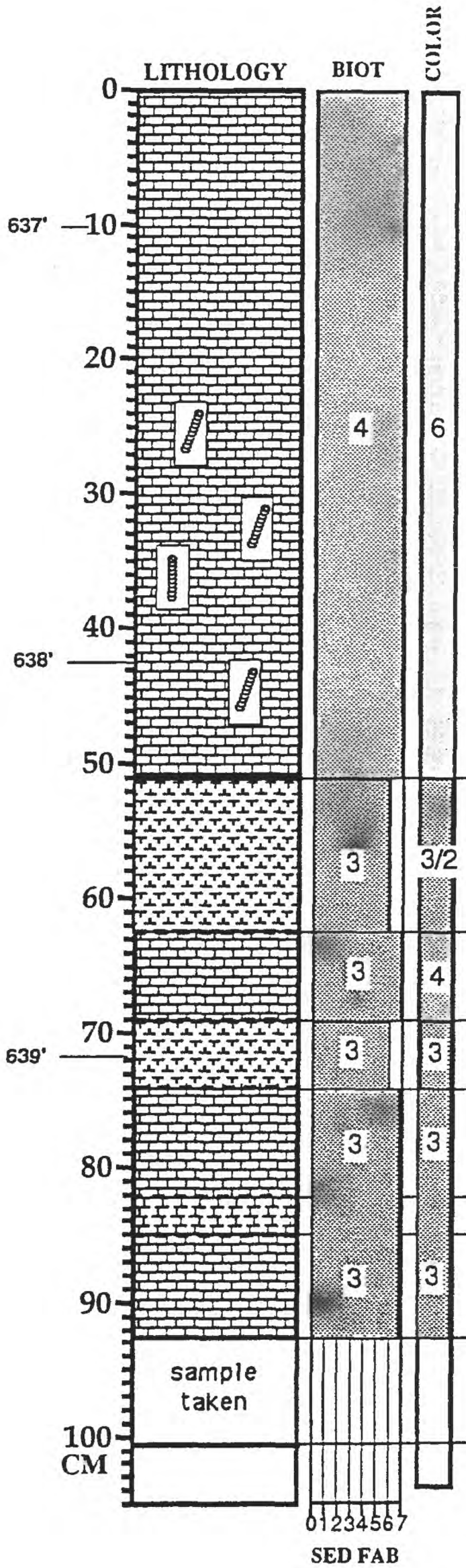

Unit 160 - 11.5 cm; MARLSTONE; mod. bioturb. (6) w/ Chond. & Plano. burrows (3); ol. gry. to lt. ol. gry. (3/2); abund. Ino. frags.; abund. sln. seams. and compacted burrows; l. cont. grad. over 3 cm

Unit 161 - 6.5 cm; LIMESTONE; very bioturb. (7) w/ Chond. & Plano. burrows (3); yel. gry. (4); l. cont. grad. over 2 cm

Unit 162 - 5 cm; MARLSTONE; mod. bioturb. (6) w/ Chond. & Plano. burrows (3); lt. ol. gry. (3); abund. Ino. frags.; l. cont. grad. over 2 cm

Unit 163 - 8.5 cm; LIMESTONE; very bioturb. (7) w/ Chond. & Plano. burrows (3); lt. ol. gry. (3); l. cont. grad. over 1 cm

Unit 164 - 2.5 cm; LIMESTONE; very bioturb. (7); abundant flaser structures; lt. ol. gry (3); l. cont. grad. over 1 cm

Unit 165 - 7.5 cm; LIMESTONE; very bioturb. (7) w/ Chond. & Plano. burrows (3); burrowed 0.5-cm thick calcarenite zone; lt. ol. gry. (3); l. cont. sharp?

Unit 166 - 8 cm; BENTONITE?; sample taken

MAA/WED/BBS - 6/92

CORE: AMOCO Rebecca K
Bounds #1

BOX # 12a
BOX FOOTAGE 639-649'

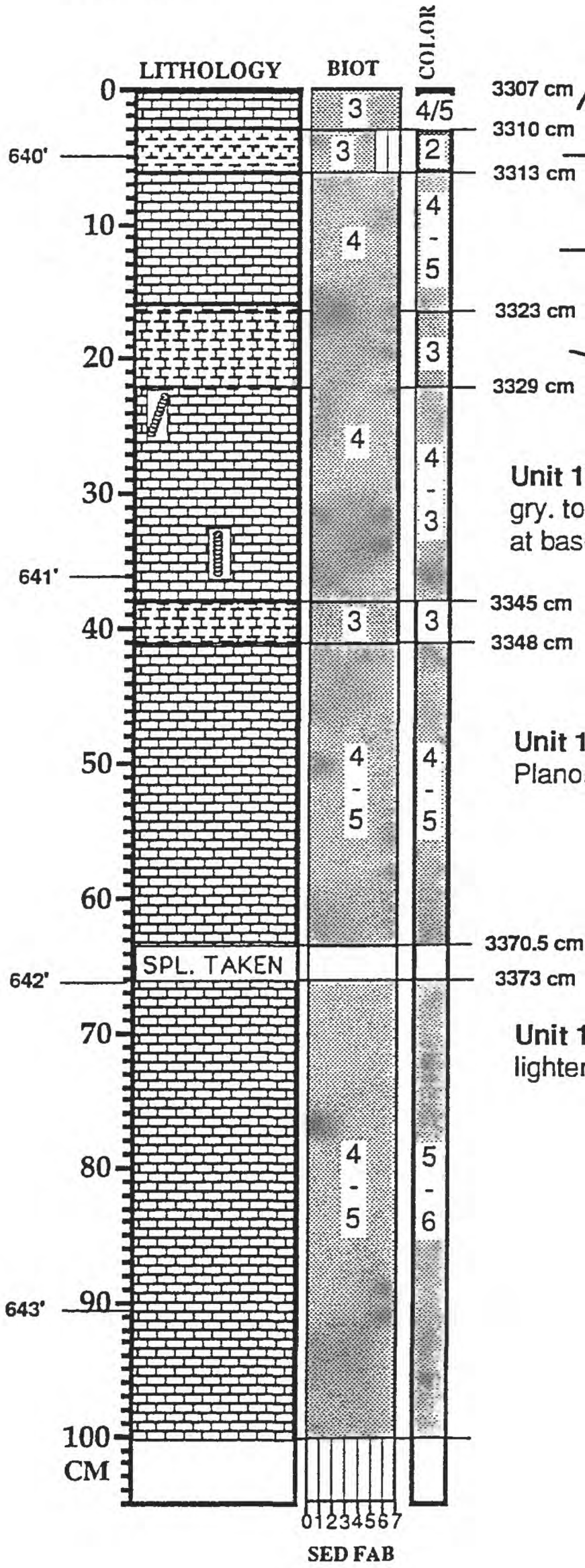

Unit 167 - 3 cm; LIMESTONE; very bioturb. (7) w/ Chond. & Plano. burrows (3); yel. gry. to v. lt. gry. (4/5); common sln. seams; l. cont. grad. over 1 cm

Unit 168 - 3 cm; MARLSTONE; sli. bioturb. (5) w/ lg.Plano. burrows (3); ol. gry. (2); abund. Ino. frags.; sln. seams at base; l. cont. grad. over 1 cm

Unit 169 - 10 cm; LIMESTONE; v. bioturb. (7) w/ lg. Plano., Teich., & Zooph. burrows (4); yel. gry. to lt. gry. (4/5); few Ino. frags.; l. cont. grad. over 1 cm

Unit 170 - 6 cm; MARLY LIMESTONE; mod. bioturb. (6) w/ lg.Plano. & Teich. burrows (4); lt. ol. gry. (3); many sln. seams; l. cont. grad. over 4 cm

Unit 171 - 16 cm; LIMESTONE; similar to Unit 169; yel. gry. to lt. ol. gry. (4/3); l. cont. grad. over 2 cm; sln. seams at base

Unit 172 - 3 cm; MARLY LIMESTONE; v. bioturb. (7) w/ lg.Plano. & Teich. burrows (3); lt. ol. gry. (3); many sln. seams; l. cont. grad. over 1 cm

Unit 173 - 22.5 cm; LIMESTONE; v. bioturb. (7) w/ lg. Plano., Teich., & Thall. burrows (4/5); yel. gry. to lt. gry. (4/5)

Unit 174 - 2.5 cm; BENTONITE? (sample taken)

Unit 175 - 22.5 cm; LIMESTONE similar to Unit 173 but lighter, v. lt. gry. to white (5/6); common Ino. frags.

MAA/WED/BBS - 6/92

CORE: AMOCO Rebecca K
Bounds #1

BOX # 12b

BOX FOOTAGE 639-649'

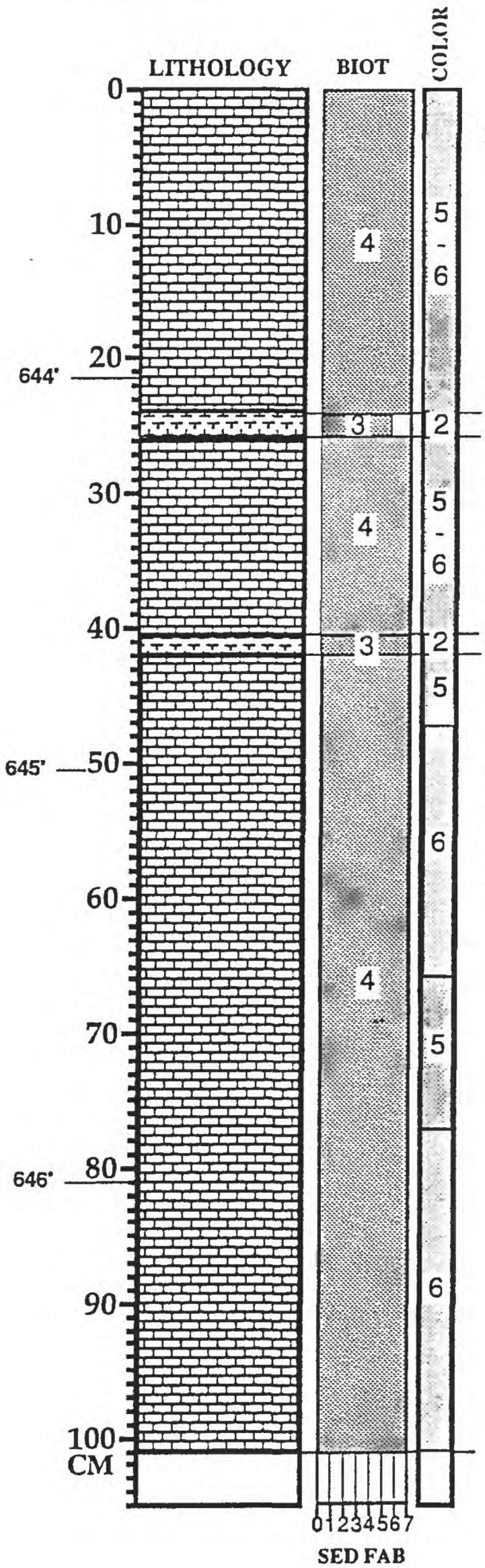

Unit 175 (cont.) - LIMESTONE as above; l. cont. sharp

Unit 176 - 1.5 cm; MARLSTONE; sli. bioturb. (5) w/ lg.Plano. burrows (3); ol. gry. (2); abund. Ino. frags.; sln. seams at base; l. cont. sharp

Unit 177 - 13.5 cm; LIMESTONE; v. bioturb. (7) w/ large Plano., Teich. burrows (4); white (6) to v. lt. gry. (5); abund. Ino. frags. throughout, but particularly concentrated in the lower part; l. cont. sharp.

Unit 178 - 1 cm; MARLSTONE; v. bioturb. (7) w/ lg.Plano. burrows (3); ol. gry. (2); abund. Ino. frags.; l. cont. sharp

Unit 179 - 64.5 cm; LIMESTONE; v. bioturb. (7) w/ large Plano., Teich. (partic. abund.) burrows (4); alt. color cycles of white (6) and v. lt. gry. (5); abund. Ino. frags. throughout, but particularly concentrated in the lower part; l. cont. sharp.

MAA/WED/BBS - 6/92

CORE: AMOCO Rebecca K
Bounds #1

BOX # 12c

BOX FOOTAGE 639-649

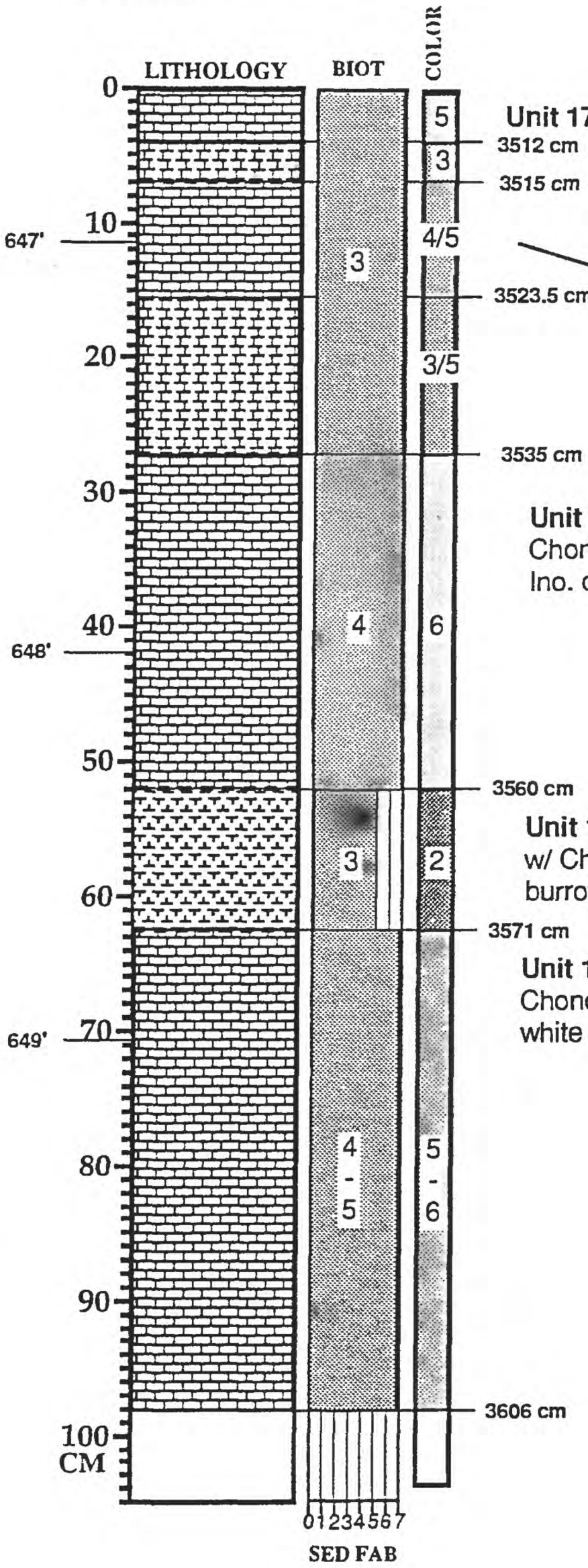

Unit 179 (cont.) - LIMESTONE as above; l. contact sharp

Unit 180 - 3 cm; MARLSTONE to MARLY LIMESTONE; V. bioturb. (7) w/ Chond. & Plano. burrows (3); lt.ol. gry. (3); l. cont. grad. over 1 cm

Unit 181 - 8.5 cm; LIMESTONE; very bioturb. (7) w/ Chond. & Plano. burrows (3); yel. gry to lt. gry. (4/5); l. cont. grad. over 1 cm

Unit 182 - 11.5 cm; MARLY LIMESTONE to LIMESTONE; very bioturb. (7) w/ Chond. & Plano. bur.(3); lt. ol. gry to lt. gry. (3/5); abund. stylol. seams; Ino. frags. @ top of unit.; l. cont. grad. over 1 cm

Unit 183 - 25 cm; LIMESTONE; very bioturb. (7) w/ lg. Chond., Plano, Teich., & Thalas. burrows (4); white (6); Ino. debris throughout; l. cont. grad. over 2 cm

Unit 184 - 11 cm; MARLSTONE; bentonitic?; sli.. bioturb. (5) w/ Chond. & Plano. burrows (3); ol. gry. (2) w/ minor white burrows; small Ino. frags. throughout; l. cont. sharp

Unit 185 - 37 cm; LIMESTONE; very bioturb. (7) w/ v.lg. Chond., Plano, Teich., & Thalas. burrows (4/5); v. lt. gry. to white (5/6)

MAA/WED/BBS - 6/92

CORE: AMOCO Rebecca K
Bounds #1

BOX # 13a
BOX FOOTAGE 649-660'

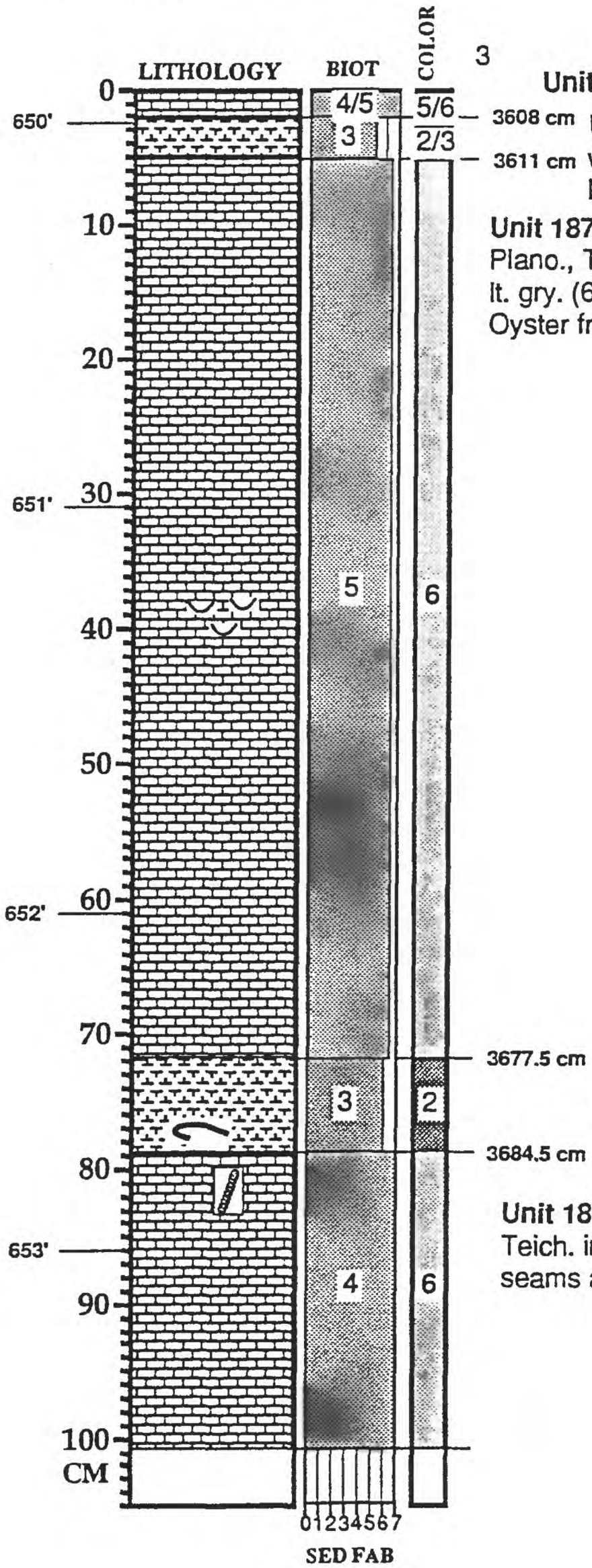

Unit 185 (cont.) - LIMESTONE; as above ; l. cont. sharp

Unit 186 - 3 cm; MARLSTONE; sli. bioturb. (4/5) w/ lg.Plano. burrows (3); ol. gry.to lt. ol. gry. (2/3); l. cont. sharp

Unit 187 - 66.5 cm; LIMESTONE; highly bioturb. (6/7) w/ lg. Plano., Teich., Thalass., & Zooph. burrows (5); yel. gry. to v. lt. gry. (6) w/ burrow mottling and pyrite filled burrows; Ino. & Oyster frags.; l. cont. grad. over 2 cm

Unit 188 - 7 cm; MARLSTONE; sli. bioturb. (5) w/ lg.Plano. burrows (3); ol. gry. (2); abund. Ino. frags.; sln. seams at base; l. cont. sharp

Unit 189 - 65 cm; LIMESTONE; v, bioturb. (7) w/ abund. Teich. in upper part (4); white (6) w/ lt. gry burrow fill; sln. seams at 88-89 cm

MAA/WED/BBS - 6/92

CORE: AMOCO Rebecca K
Bounds #1

BOX # 14a
BOX FOOTAGE 660-670'

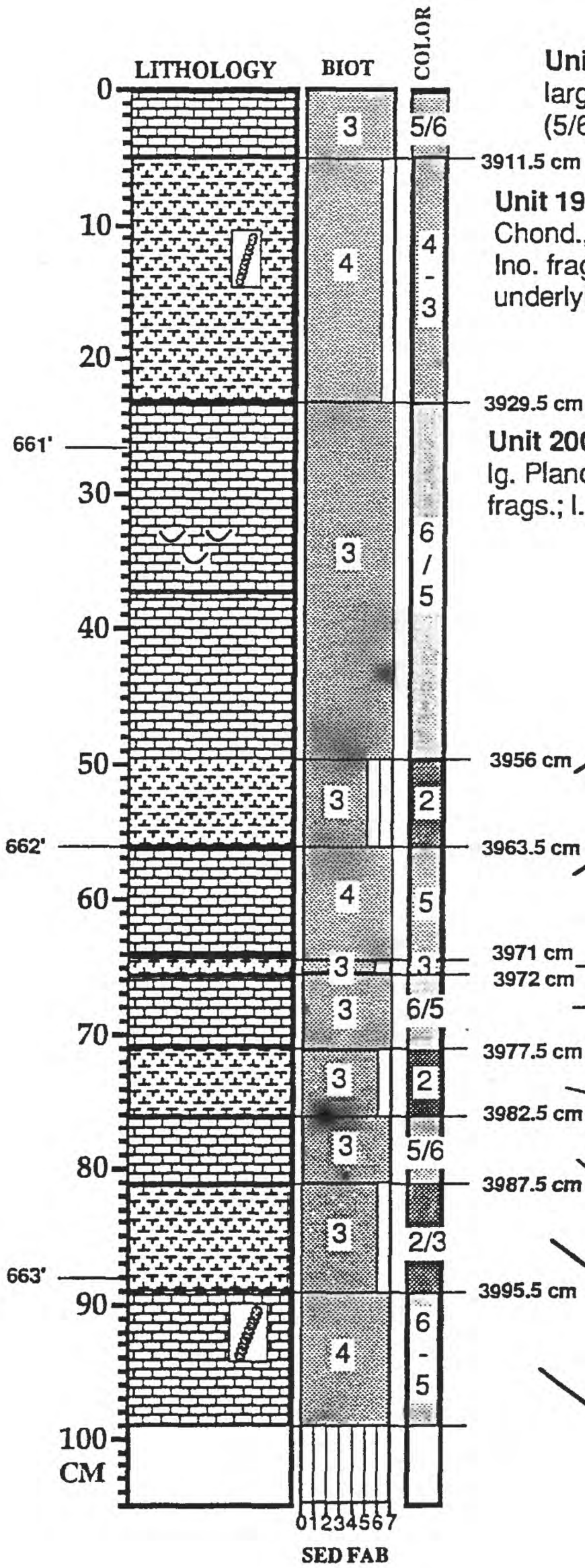

Unit 198 (cont.) - LIMESTONE; very bioturb. (7) w/ large Plano. & Teich. burrows (4); v. lt. gry. to white (5/6); l. cont. grad. over 3 cm.

Unit 199 - 18 cm; MARLSTONE; mod. bioturb. (6) w/ lg. Chond., Plano., & Teich. burrows (4), esp. at top, w/ lt. fill; Ino. frags. in lower 4 cm; abund. sln. seams at base into underlying unit; yel. gry.to lt. ol. gry. (4/3); l. cont. sharp

Unit 200 - 26.5 cm; LIMESTONE; highly bioturb. (7) w/ abund. lg. Plano burrows (3); v. lt. gry. to white (6/5) w/ Oyster frags.; l. cont. grad. over 1 cm

Unit 201 - 7.5 cm; MARLSTONE; sli. bioturb. (5) w/ lg.Plano. burrows (3); ol. gry. (2); abund. Ino. frags.; abund. sln. seams at base; l. cont. sharp

Unit 202 - 7.5 cm; LIMESTONE; v. bioturb. (7) w/ abund. Plano. & Teich. burrows (4); white to v. lt. gry. (6/5); abund. Ino. frags.; sln. seams at top; l. cont. sharp

Unit 203 - 1 cm; MARLSTONE (similar to Unit 201)

Unit 204 - 5.5 cm; LIMESTONE; v. bioturb. (7) w/ Plano. burrows (3); white to v. lt. gry. (6/5); abund. Ino. frags. & sln. seams; l. cont. grad. over 1 cm

Unit 205 - 5 cm; MARLSTONE; mod. bioturb. (6) w/ lg.Plano. burrows (3); ol. gry. (2); abund. Ino. frags.; abund. sln. seams; l. cont. grad. over 1 cm

Unit 206 - 5 cm; LIMESTONE; v. bioturb. (7) w/ abund. Plano. burrows (3); white to v. lt. gry. (6/5); abund. Ino.; l. cont. grad. over 1 cm

Unit 207 - 8 cm; MARLSTONE; mod. bioturb. (6) w/ lg.Plano. burrows (3); ol. gry.to lt. ol. gry. (2/3); abund. Ino. frags.; abund. sln. seams & flattened burrows; l. cont. grad. over 1 cm

Unit 208 - 68 cm; LIMESTONE; v. bioturb. (7) w/ abund. Teich. in upper part (4); white to v. lt. gry. (6/5) w/ darker burrow fill & sln. seams at top

MAA/WED/BBS - 6/92

CORE: AMOCO Rebecca K
Bounds #1

BOX # 13b

BOX FOOTAGE 649-660'

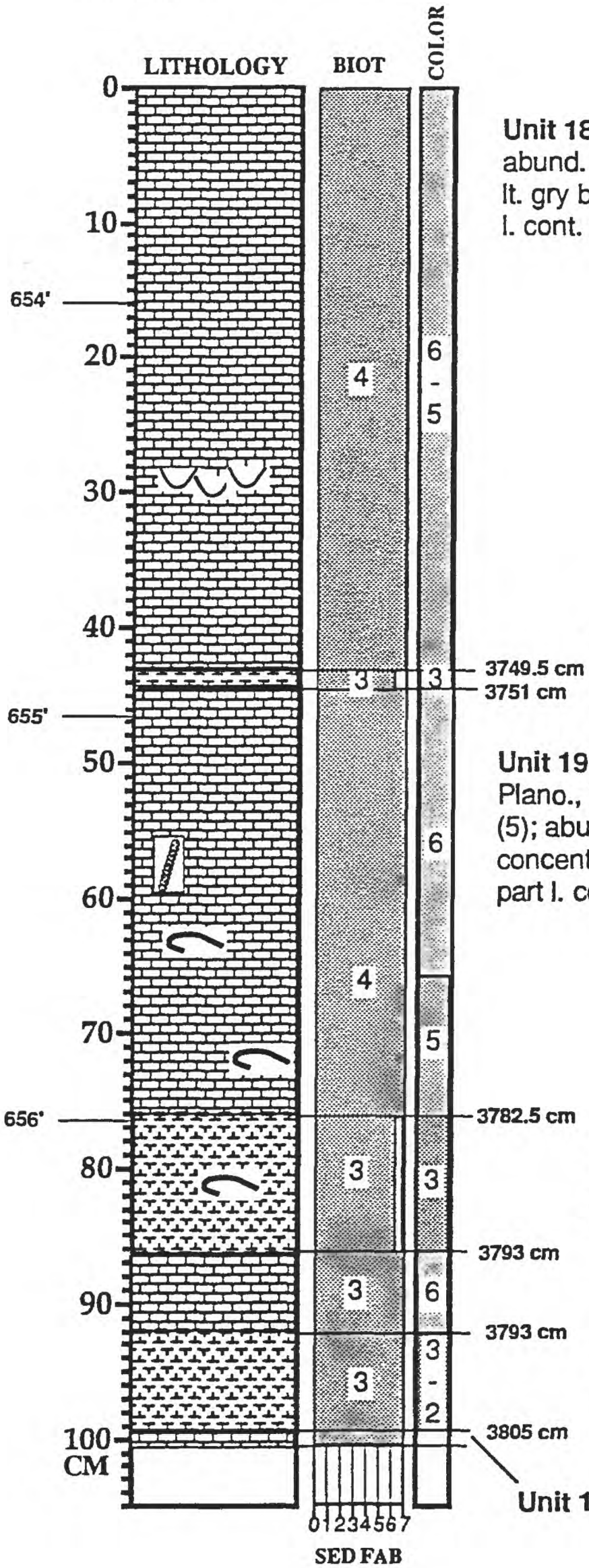

Unit 189 (cont.) - LIMESTONE as above; v. bioturb. (7) w/ abund. large (3-4 cm0 burrows in upper part (4); white (6) w/ lt. gry burrow fill; sln. seams at base; oyster and lno. frags.; l. cont. gread. over 1 cm

Unit 190 - 1.5 cm; MARLSTONE; mod. bioturb. (6) w/ lg.Plano. burrows (3); lt. ol. gry. (3); abund. lno. frags.; l. cont. grad over 1 cm

Unit 191 - 31.5 cm; LIMESTONE; v. bioturb. (7) w/ large Plano., Teich. burrows (4); white (6) grading to v. lt. gry. (5); abund. lno. frags. throughout, but particularly concentrated in the lower part;abund. sln. seams in lower part l. cont. grad. over 1.5 cm

Unit 192 - 10.5 cm; MARLSTONE; mod. bioturb. (6) w/ lg.Plano. burrows (3); lt. ol. gry. (3) w/ lt. gry burrow fill; abund. lno. frags. throughout; abund. sln. seams; l. cont. grad over 1.5 cm

Unit 183 - 5 cm; LIMESTONE; v, bioturb. (7) w/ large Plano burrows (3); white (6); sln. seams; lower cont. grad over 2 cm

Unit 194 - 7 cm; MARLSTONE; v. bioturb. (7) w/ lg.Plano. burrows (3); lt. ol. gry. w/ lt. gry burrow fill (3/2); abund. lno. & oyster frags. throughout; abund. sln. seams; l. cont. sharp

Unit 195 - 92 cm; LIMESTONE (see next page)

MAA/WED/BBS - 6/92

CORE: AMOCO Rebecca K
Bounds #1

BOX # 13c
BOX FOOTAGE 649-6460

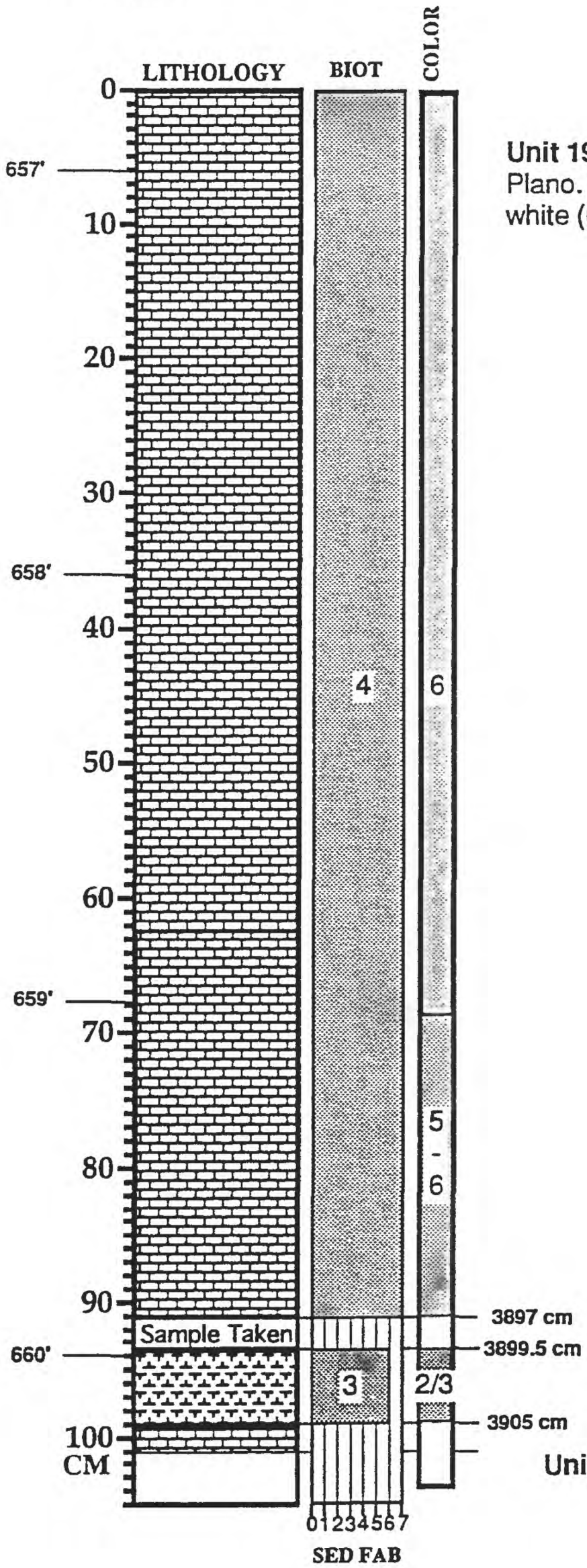

Unit 195 (cont.) - LIMESTONE; very bioturb. (7) w/ large Plano. & Teich. burrows (4); rare pyrite filled burrows; white (6) grading to v. lt. gry. at base; l. contact sharp

Unit 196 - 2.5 cm; BENTONITE? (no lith. info.)

Unit 197 - 5.5 cm; MARLSTONE; mod. bioturb. (6) w/ Chond. & Plano. burrows (3); lt. ol. gry. (3); l. cont. sharp

Unit 198 - 6.5cm; LIMESTONE (see next page)

MAA/WED/BBS - 6/92

CORE: AMOCO Rebecca K
Bounds #1

BOX # 14b

BOX FOOTAGE 669-670'

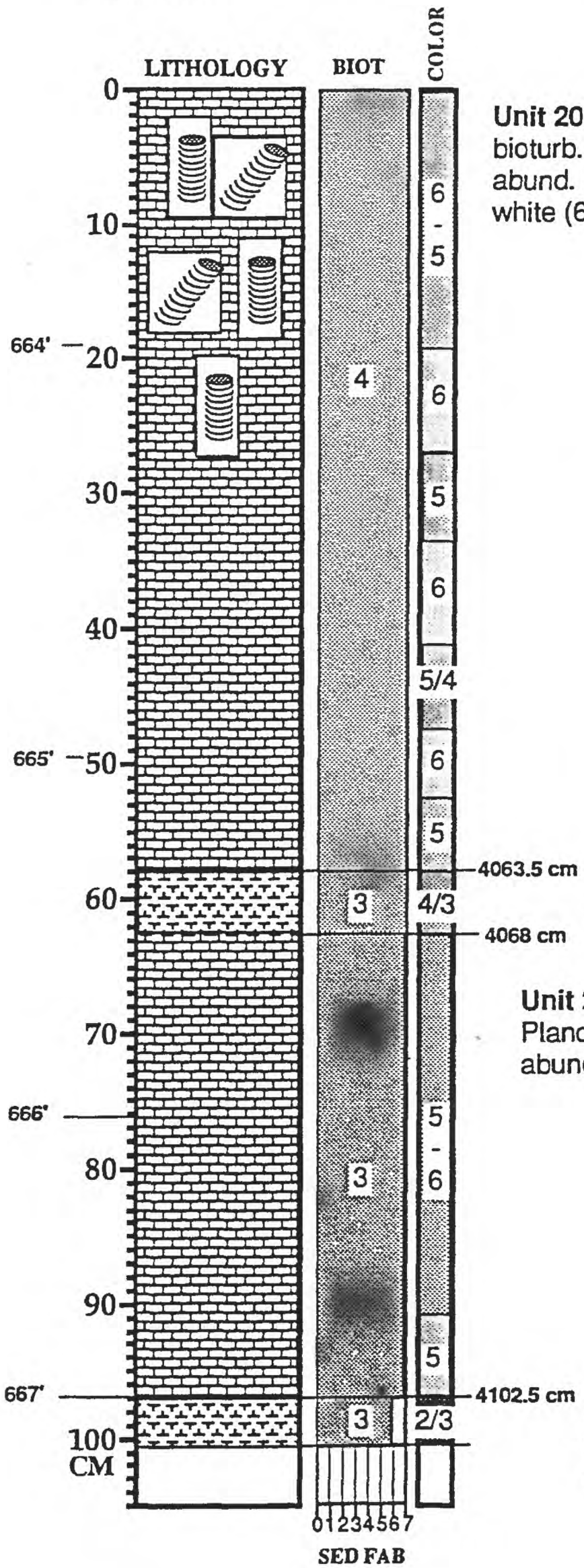

Unit 208 (cont.) - 68 cm; LIMESTONE as above; v. bioturb. (7) w/ abund. large, bowl-shaped burrows; abund. Ino. debris.; color cycles of v. lt. gry. (5) to white (6)

Unit 209 - 4.5 cm; MARLSTONE; v. bioturb. (7) w/ lg. flat Plano. burrows (3); med. lt. gry. (4/3); common Ino. frags.; l. cont. grad over 1 cm

Unit 210 - 34.5 cm; LIMESTONE; v. bioturb. (7) w/ large Plano. burrows (3); white (6) grading to v. lt. gry. (5); abund. Ino. frags. at top; l. cont. sharp

Unit 211 - 9 cm; MARLSTONE; mod. bioturb. (6) w/ lg.Plano. burrows (3); lol. gry. to med. gry (3/2); abund. Ino. frags. throughout

MAA/WED/BBS - 6/92

CORE: AMOCO Rebecca K
Bounds #1

BOX # 14c

BOX FOOTAGE 660-670

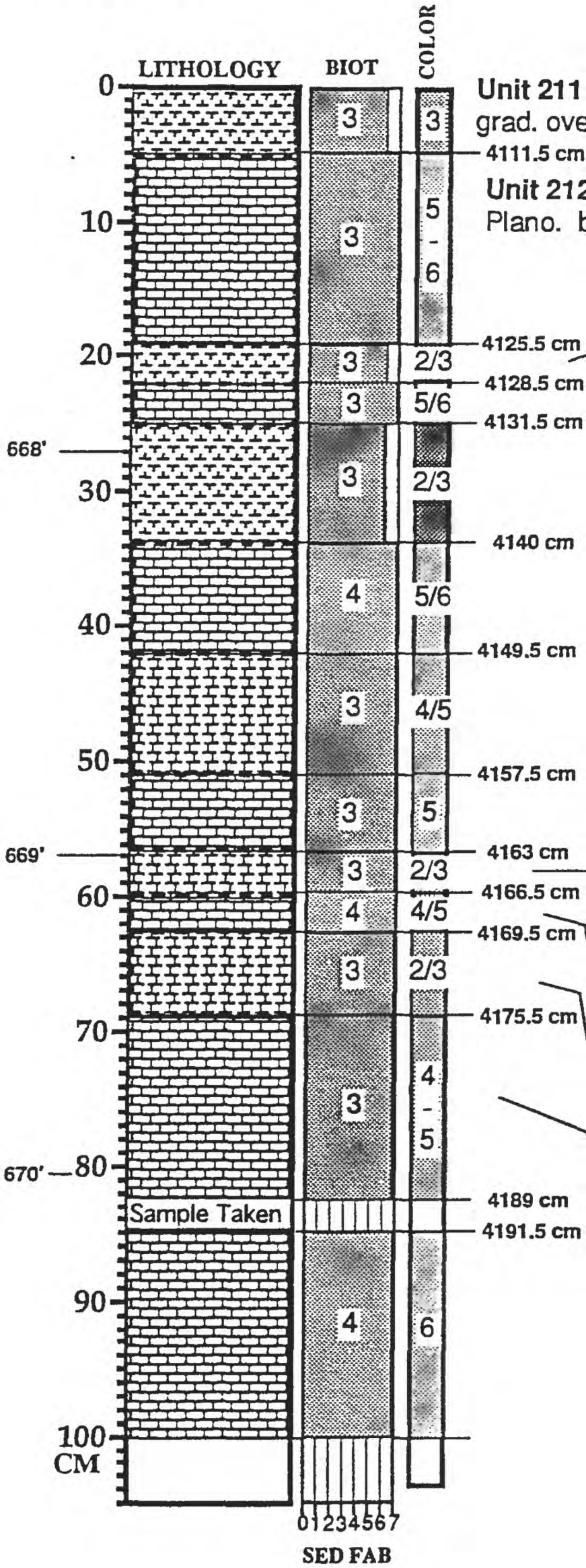

Unit 211 (cont.) - MARLSTONE as above; l. cont. grad. over 1 cm

Unit 212 - 14 cm; LIMESTONE; very bioturb. (7) w/ large Plano. burrows (3); v. lt. gry. to white (5/6); l. contact sharp

Unit 213 - 3 cm; MARLSTONE; mod. bioturb. (6) w/ Chond. & Plano. burrows (3); abund. Ino. frags. and sln. seams; ol. gry. to lt. ol. gry. (2/3); l. cont. grad. over 2 cm

Unit 214 - 3 cm; LIMESTONE similar to Unit 212; l. contact grad. over 2 cm

Unit 215 - 8.5 cm; MARLSTONE similar to Unit 213; l. cont. grad. over 2 cm

Unit 216 - 9.5 cm; LIMESTONE similar to Unit 212; l. contact grad. over 2 cm

Unit 217 - 8 cm; MARLY LIMESTONE; very bioturb. (7) w/ large Plano. burrows (3); yel. gry. to v. lt. gry. (4/5); l. contact grad. over 2-3 cm

Unit 218 - 5.5 cm; LIMESTONE similar to Unit 212 but w/ pyrite nodules; l. contact grad. over 2 cm

Unit 219 - 3.5 cm; MARLY LIMESTONE; very bioturb. (7) w/ large Plano. burrows (3); med. lt. gry. to ol. gry. (2/3); sln. seams; l. contact grad. over 2 cm

Unit 220 - 3 cm; LIMESTONE similar to Unit 212; l. contact grad. over 2 cm

Unit 221 - 6 cm; MARLY LIMESTONE similar to Unit 219; l. contact grad. over 2 cm

Unit 222 - 13.5 cm; LIMESTONE similar to Unit 212; l. contact sharp?

Unit 223 - 2.5 cm; BENTONITE? (no lith. info.)

Unit 224 - 60 cm; LIMESTONE similar to Unit 212

MAA/WED/BBS - 6/92

CORE: AMOCO Rebecca K
Bounds #1

BOX # 15a
BOX FOOTAGE 670-681'

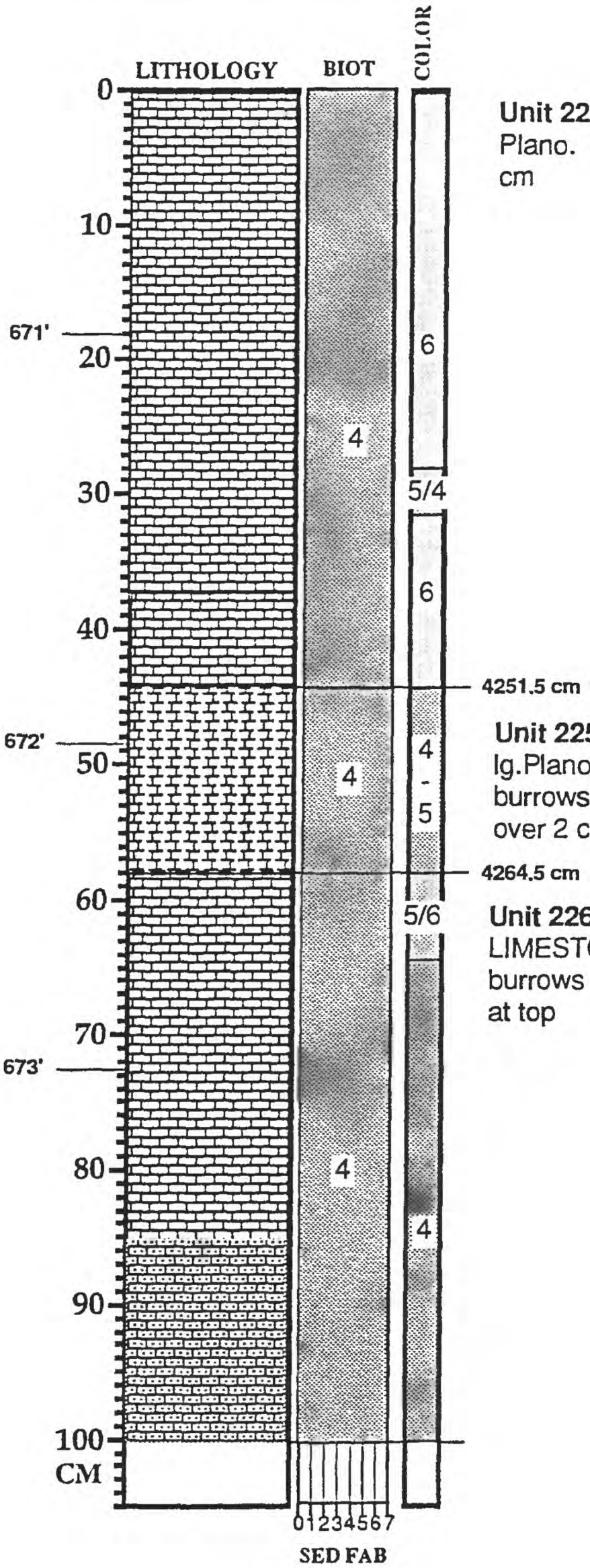

Unit 224 (cont.) - LIMESTONE; very bioturb. (7) w/ large Plano. burrows (3); mostly white (5/6); l. contact grad over 2 cm

Unit 225 - 13 cm; MARLSTONE; very bioturb. (7) w/ lg.Plano. & Teich. burrows (4); lt. gry. to v. lt. gry. (4/5); burrows flat and contorted; abund. sln. seams; l. cont. grad. over 2 cm

Unit 226 - 53 cm; LIMESTONE grading to SANDY LIMESTONE; very bioturb. (7) w/ large Plano., & Teich. burrows (4); mostly med. lt. gry. but almost white white (5/6) at top

MAA/WED/BBS - 6/92

CORE: AMOCO Rebecca K
Bounds #1

BOX # 15b

BOX FOOTAGE 670'-681

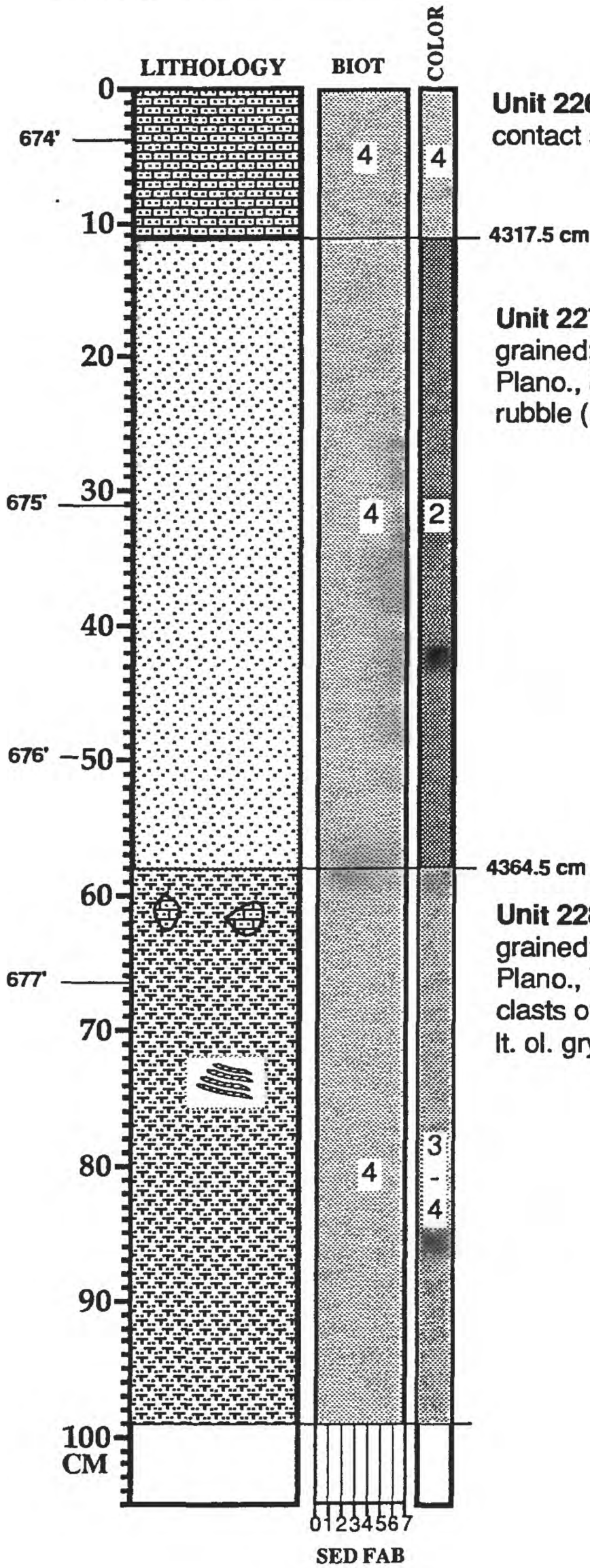

Unit 226 (cont.); SANDY LIMESTONE as above; lower contact sharp

BASE OF FT. HAYES LIMESTONE

TOP CODELL SANDSTONE MBR.,
CARLILE SHALE

Unit 227 - 47 cm; SANDSTONE ; lithic arenite; fine to med. grained; well sorted; subrounded; very bioturb w/ Chon., Plano., & Teich. burrows (4); ol. gry. (2); bottom part is rubble (missing core?); lower contact gradational

Unit 228 - 81 cm; CALCAREOUS SANDSTONE ; lfine grained; well sorted; subrounded; very bioturb w/ Chon., Plano., Teich.; & Zooph. burrows (4); upper part contains clasts of calcarenite (Juana Lopez?) up to 3 cm in diameter; lt. ol. gry. to yel. gry. (3/4)

MAA/WED/BBS - 6/92

CORE: AMOCO Rebecca K
Bounds #1

BOX # 15c

BOX FOOTAGE 670-681

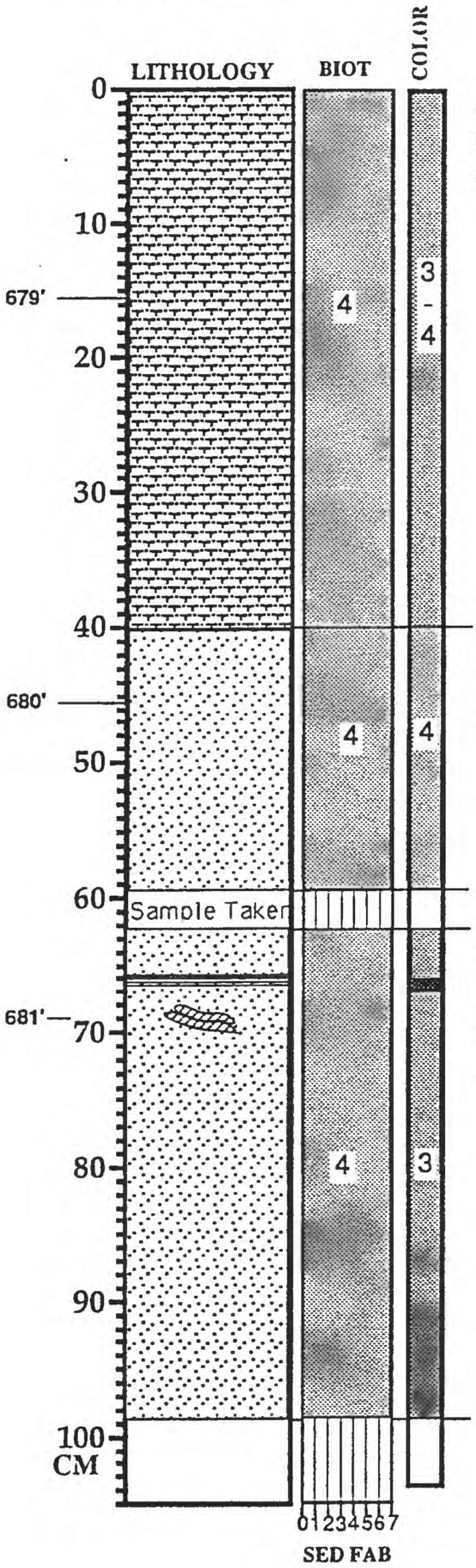

Unit 228 (cont.); CALCAREOUS SANDSTONE as above; clasts of calcarenite (Juana Lopez?) in lower 20 cm; lower contact sharp

4445.5 cm

Unit 229 - 19.5 cm; SANDSTONE ; lithic arenite; very bioturb. w/ Chon., Plano., & Teich. burrows (4); yel. gry. (4); lower contact sharp

4465 cm

4467.5 cm

Unit 230 - 2.5 cm; Lithology unknown

Unit 231 - 56.5 cm; SANDSTONE; lithic arenite; med. grain size; very bioturb. w/ Chon., Plano., & Teich. burrows (4); overall color lt. ol. gry. (3) but highly mottled w/ ol. black to ol. gry. (1-2)

MAA/WED/BBS - 6/92

CORE: AMOCO Rebecca K
Bounds #1

BOX # 16a
BOX FOOTAGE 681-693

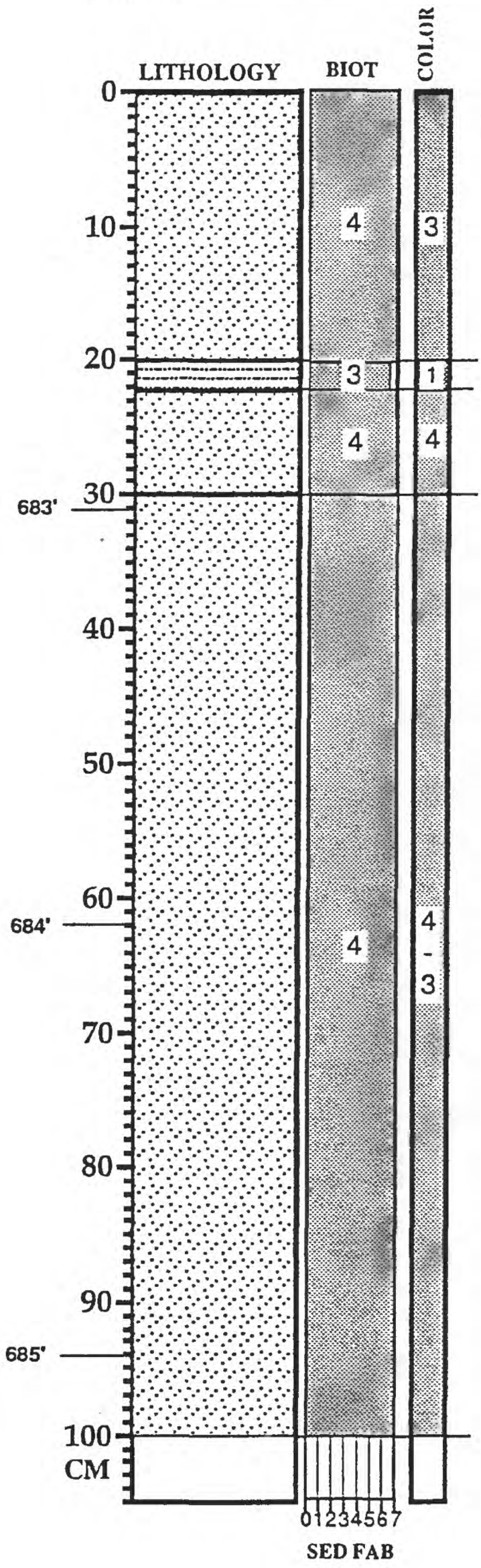

Unit 231 (cont.) - SANDSTONE as above; lower contact sharp

Unit 232 - 2 cm; SILTY SHALE; MOD. bioturb (7) w/ sand-filled Chon., Plano. burrows (3); ol. black (1); lower contact sharp

Unit 233 - 7 cm; SANDSTONE; fine grained; very bioturb (7) w/ Chon., Plano., & Teich. burrows (4); yel. gry. (4); lower contact sharp

Unit 234 - 759.5 cm; SANDSTONE; lithic arenite; med. grained; very bioturb (7) w/ Chon., Plano., & Teich. burrows (4), but burrows less distinct than above (mottled); yel. gry. to lt. ol. gry. (4/3); dark sln. flaser seams throughout

MAA/WED/BBS - 6/92

CORE: AMOCO Rebecca K
Bounds #1

BOX # 16b

BOX FOOTAGE 681-693'

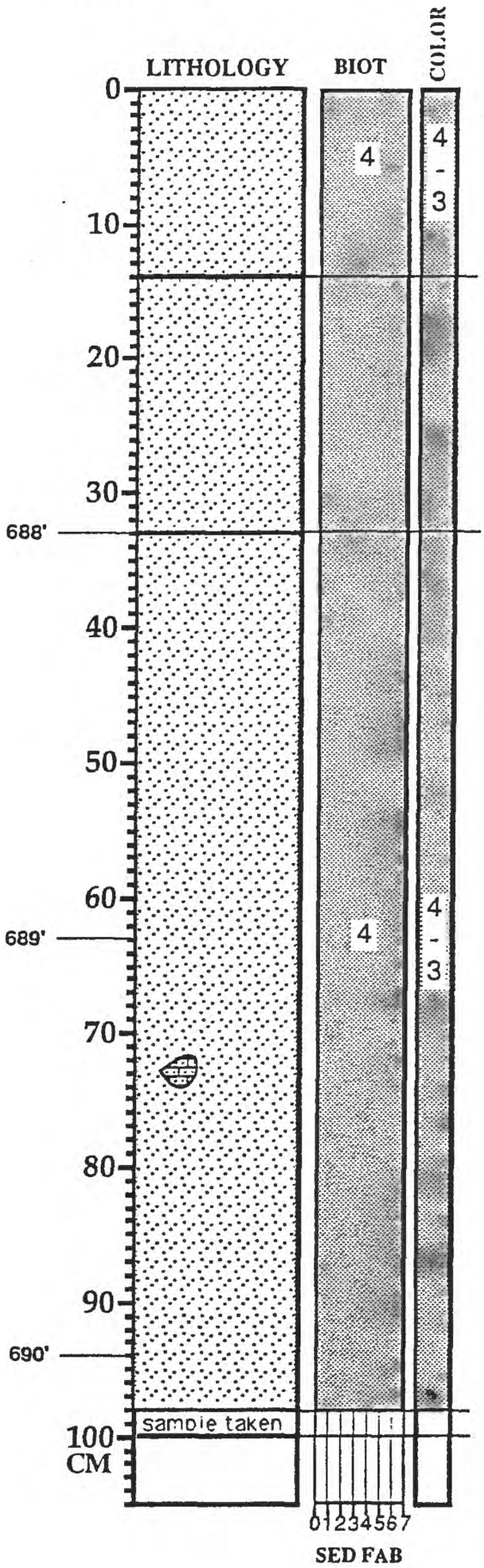

Unit 234 (cont.) - SANDSTONE as above

Rubble zone (bagged); contains 686' & 687'

Calcareous Clast

MAA/WED/BBS - 6/92

CORE: AMOCO Rebecca K
Bounds #1

BOX # 16c
BOX FOOTAGE 681-693

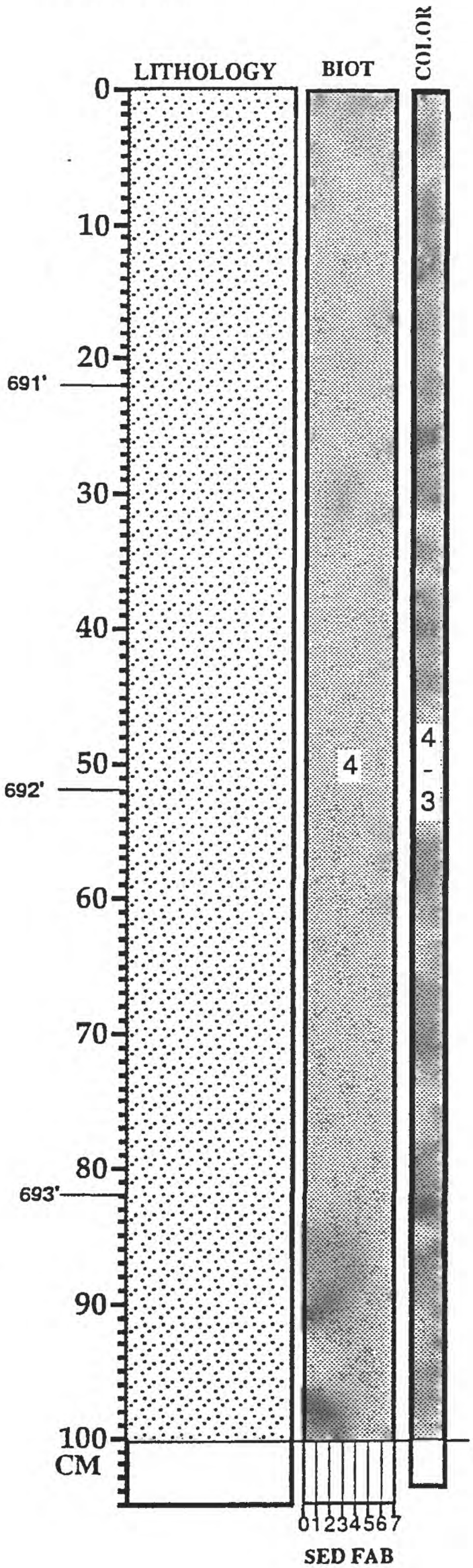

Unit 234 (cont.) - SANDSTONE as above

MAA/WED/BBS - 6/92

CORE: AMOCO Rebecca K
Bounds #1

BOX # 17a
BOX FOOTAGE 693-703

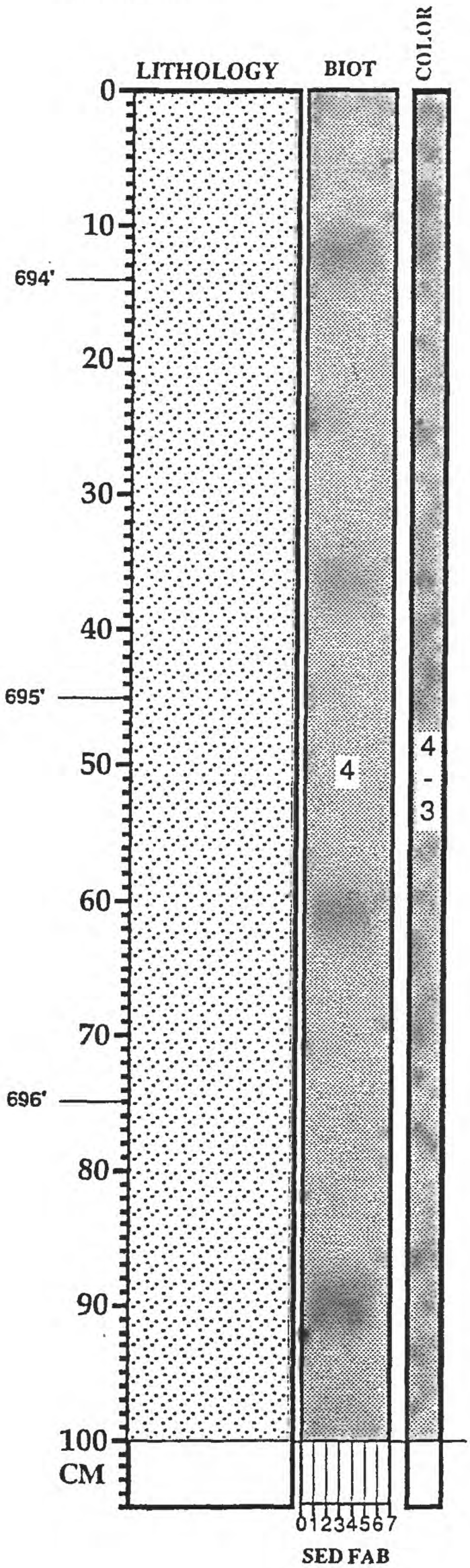

Unit 234 (cont.) - SANDSTONE as above

MAA/WED/BBS - 6/92

CORE: AMOCO Rebecca K
Bounds #1

BOX # 17b

BOX FOOTAGE 693-703

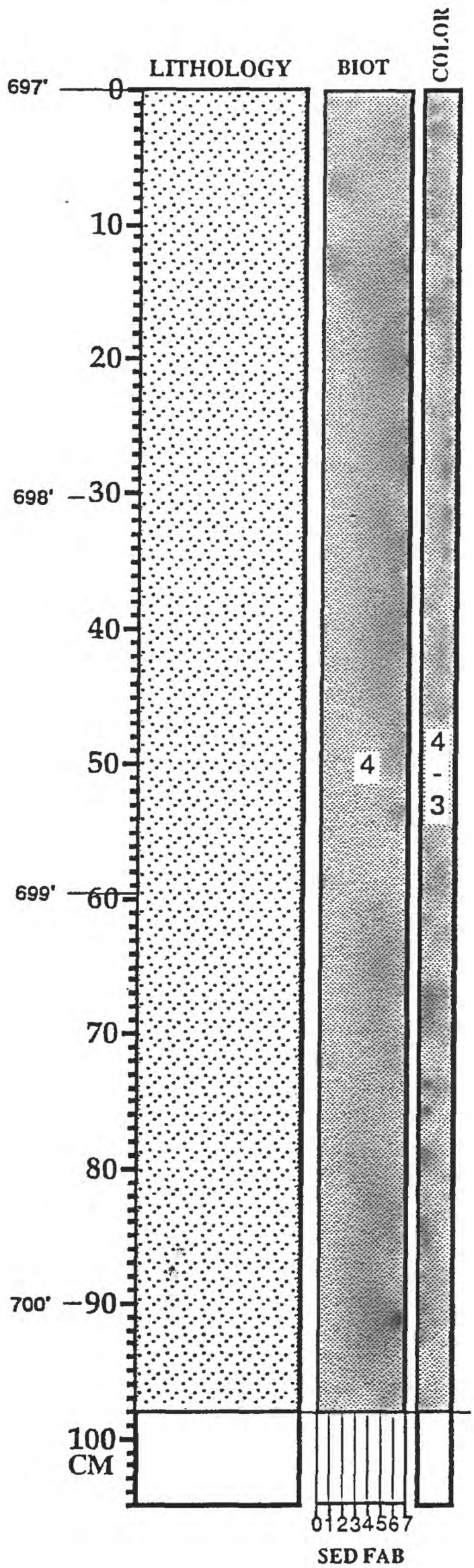

Unit 234 (cont.) - SANDSTONE as above

MAA/WED/BBS - 6/92

CORE: AMOCO Rebecca K
Bounds #1

BOX # 17c
BOX FOOTAGE 693-703

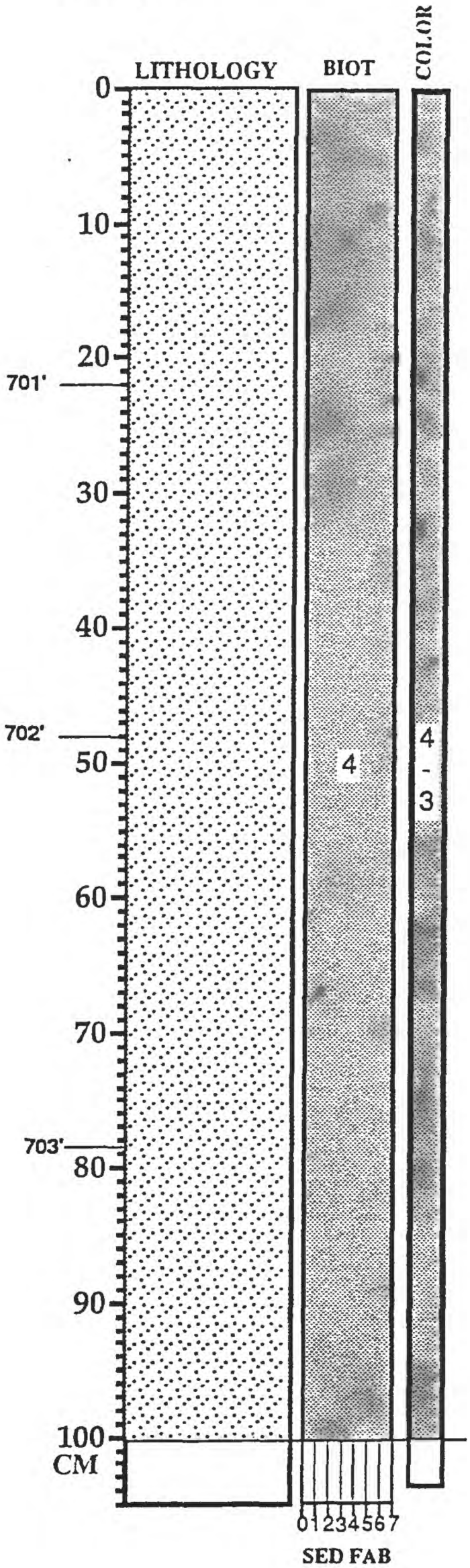

Unit 234 (cont.) - SANDSTONE as above

MAA/WED/BBS - 6/92

CORE: AMOCO Rebecca K
Bounds #1

BOX # 18a
BOX FOOTAGE 703-714

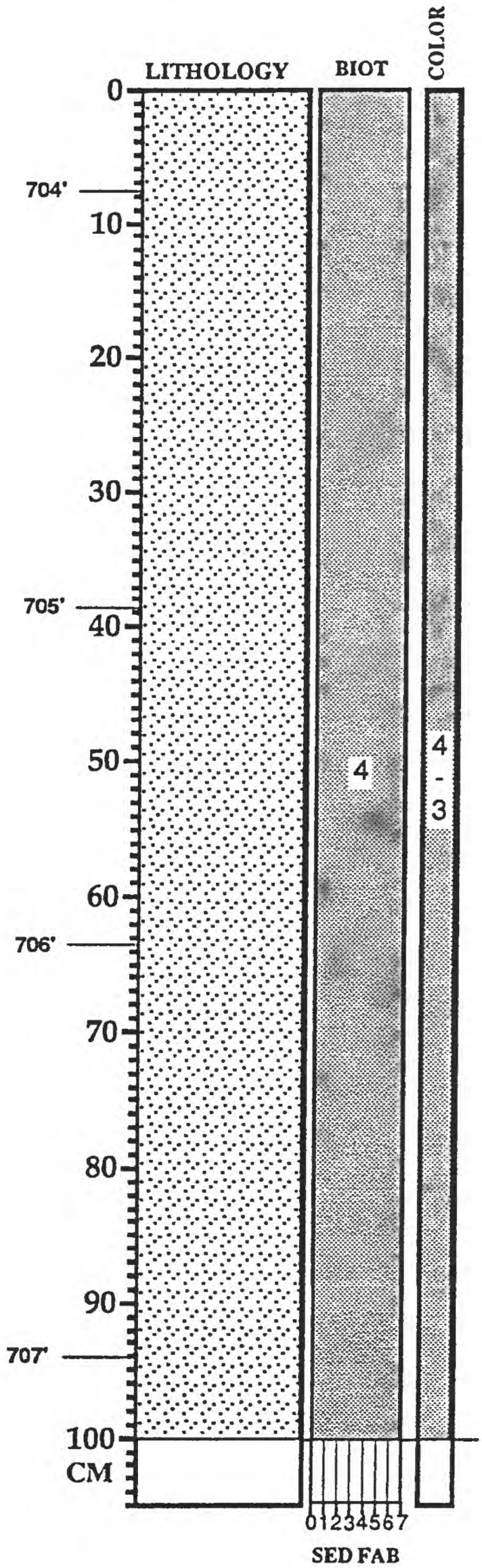

Unit 234 (cont.) - SANDSTONE as above

MAA/WED/BBS - 6/92

CORE: AMOCO Rebecca K
Bounds #1

BOX # 18b
BOX FOOTAGE 703-714'

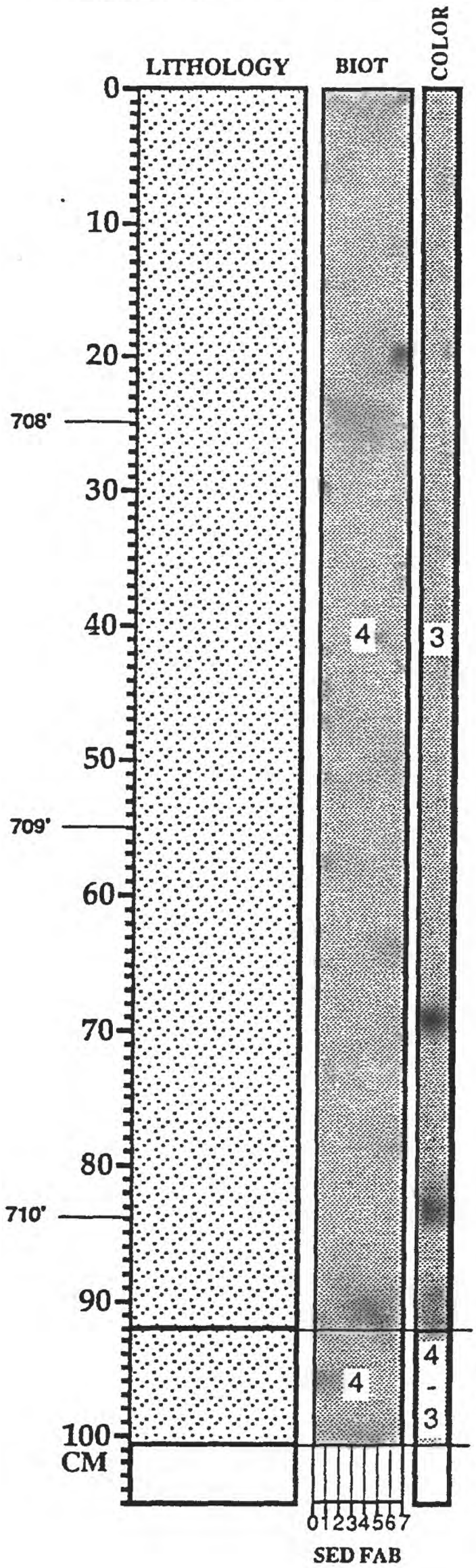

Unit 234 (cont.) - SANDSTONE as above

Unit 235 - 44.5 cm; SANDSTONE; calc. qtz. arenite; fine grained; assumed to be highly bioturbated, but w/ no discrete burrows (i.e. identifiable ichnotaxa); yel. gry. to lt. ol. gry. (4/3)

MAA/WED/BBS - 6/92

CORE: AMOCO Rebecca K
Bounds #1

BOX # 18c

BOX FOOTAGE 703-714'

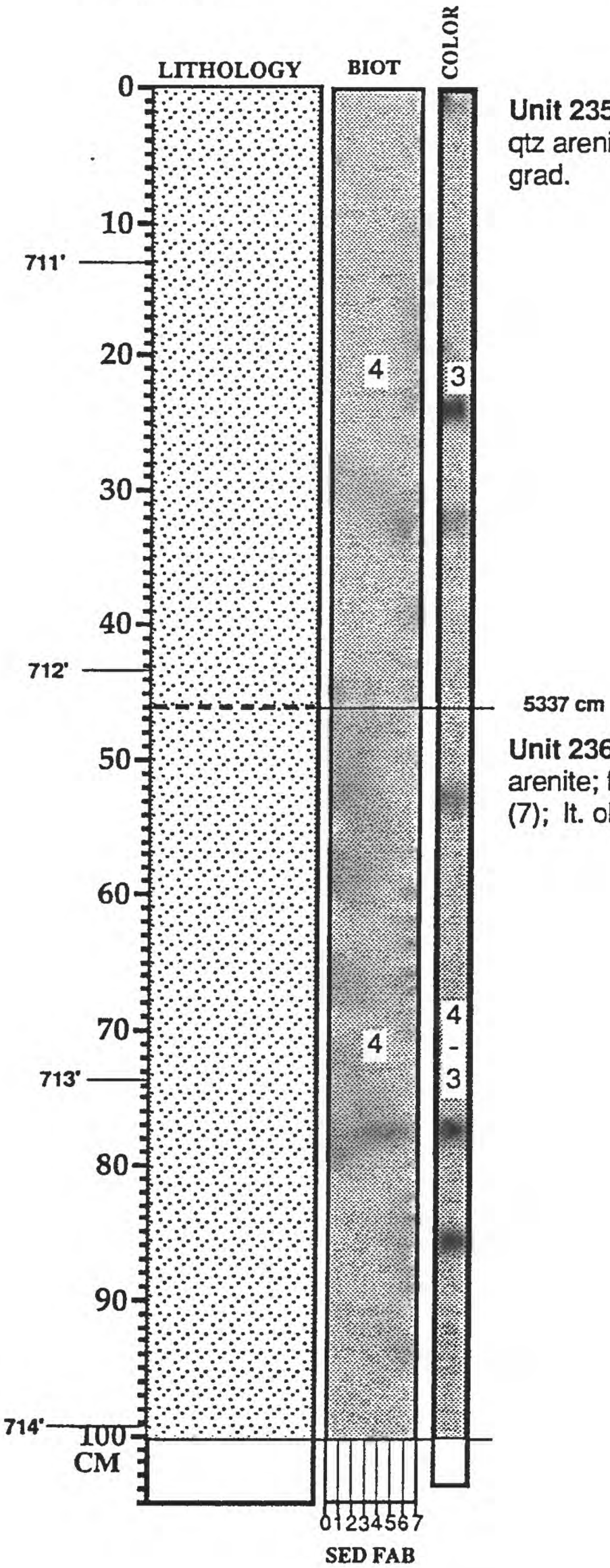

Unit 235 (cont.) - SANDSTONE as above; qtz arenite w/ calcareous cement; l. contact grad.

Unit 236 - 1243.5 cm; SANDSTONE; calc. qtz. arenite; fine grained; assumed to be highly bioturbated (7); lt. ol. gry.to yel. gry. (4/3) w/ ol. gry. mottles

MAA/WED/BBS - 6/92

CORE: AMOCO Rebecca K
Bounds #1

BOX # 19a
BOX FOOTAGE 714 -724

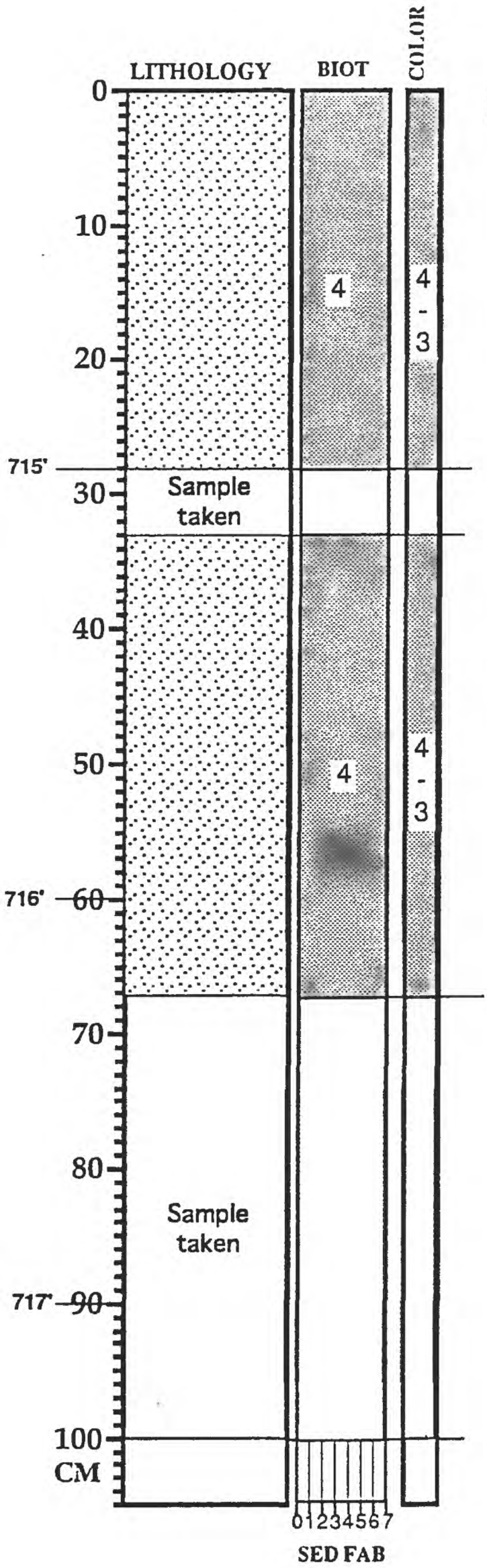

Unit 236 (cont.) - SANDSTONE as above

MAA/WED/BBS - 6/92

CORE: AMOCO Rebecca K
Bounds #1

BOX # 19b
BOX FOOTAGE 714 -724

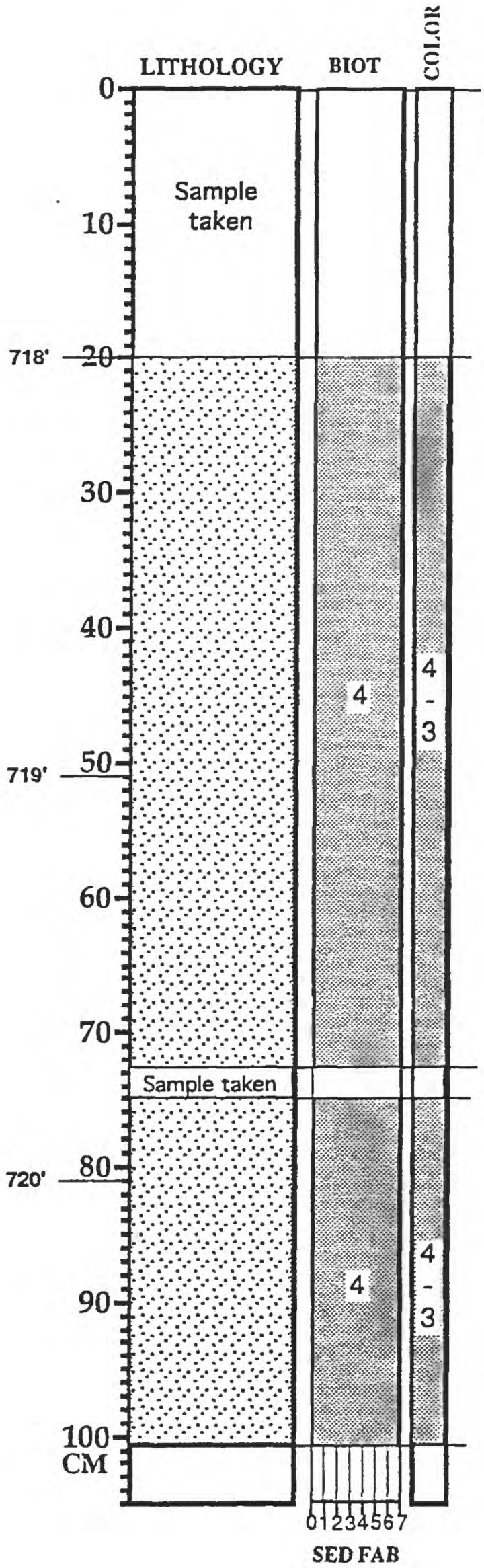

Unit 236 (cont.) - SANDSTONE as above

MAA/WED/BBS - 6/92

CORE: AMOCO Rebecca K
Bounds #1

BOX # 19c
BOX FOOTAGE 714-724

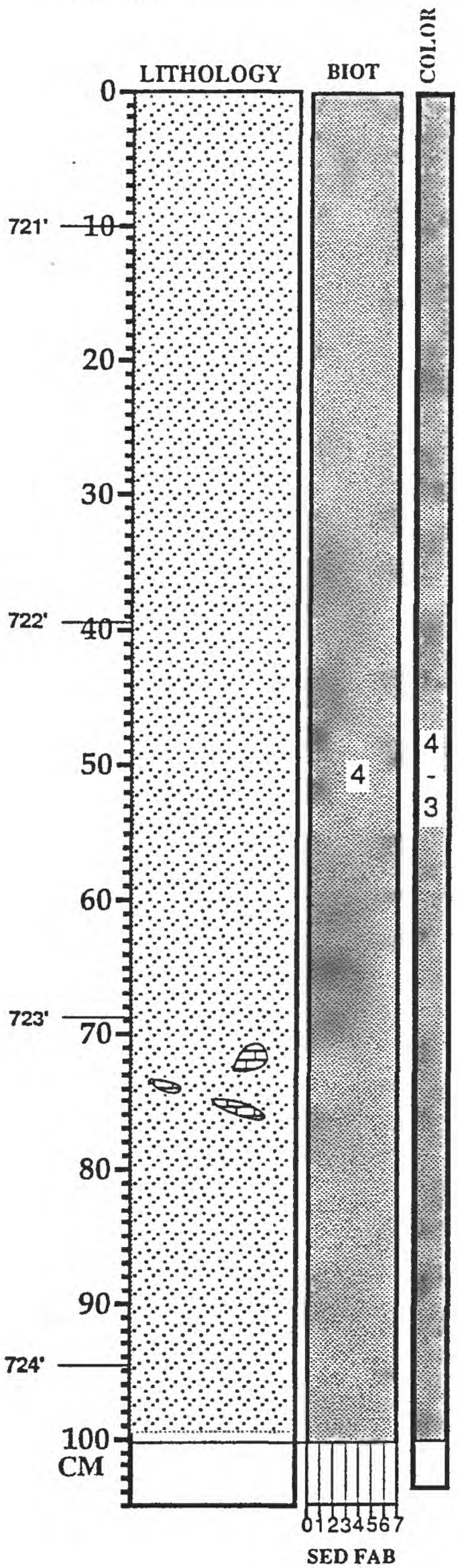

Unit 236 (cont.) - SANDSTONE as above

MAA/WED/BBS - 6/92

CORE: AMOCO Rebecca K
Bounds #1

BOX # 20a
BOX FOOTAGE 724 -734

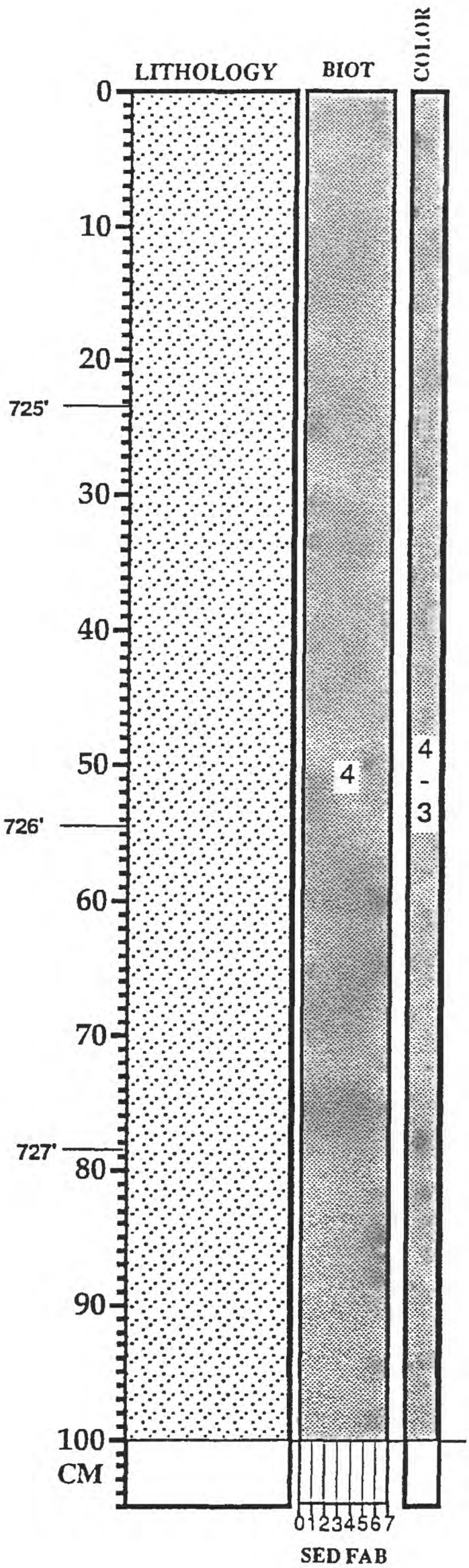

Unit 236 (cont.) - SANDSTONE as above, but grading downward to more homogeneous, fine-grained to very fine grained; fewer dark mottles and clay seams

MAA/WED/BBS - 6/92

CORE: AMOCO Rebecca K
Bounds #1

BOX # 20b

BOX FOOTAGE 724 -734

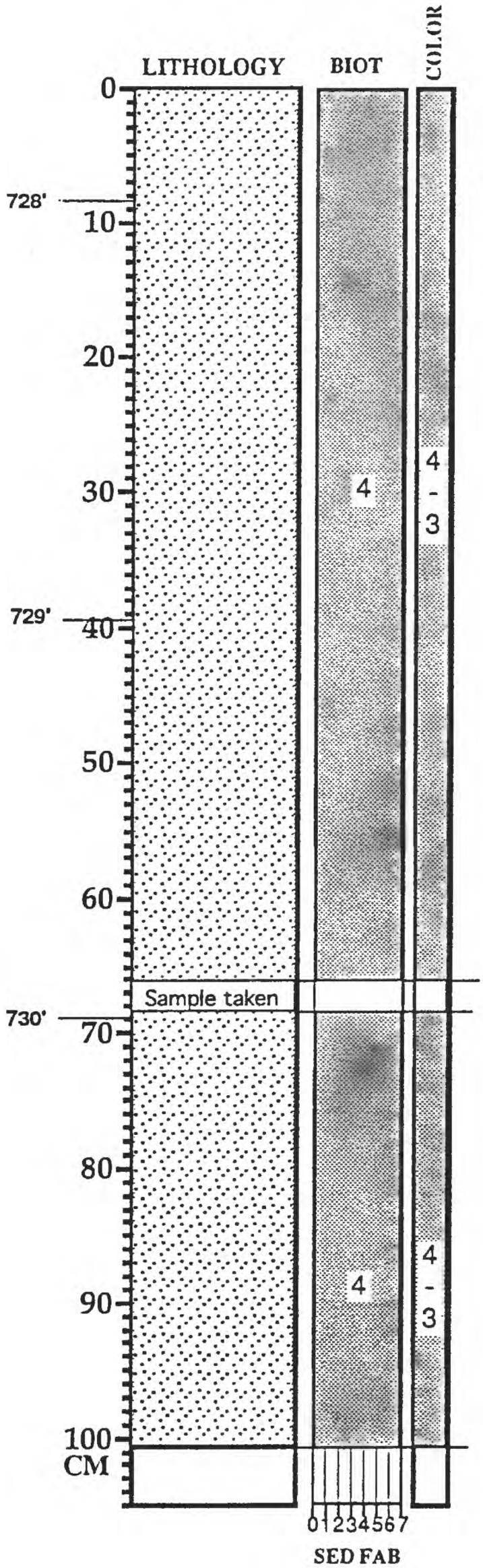

Unit 236 (cont.) - SANDSTONE as above; v. fine grained; homogeneous burrow mottling w/ common lighter colored, well sorted burrow fill; matrix somewhat argillaceous

MAA/WED/BBS - 6/92

CORE: AMOCO Rebecca K
Bounds #1

BOX # 20c
BOX FOOTAGE 724-734

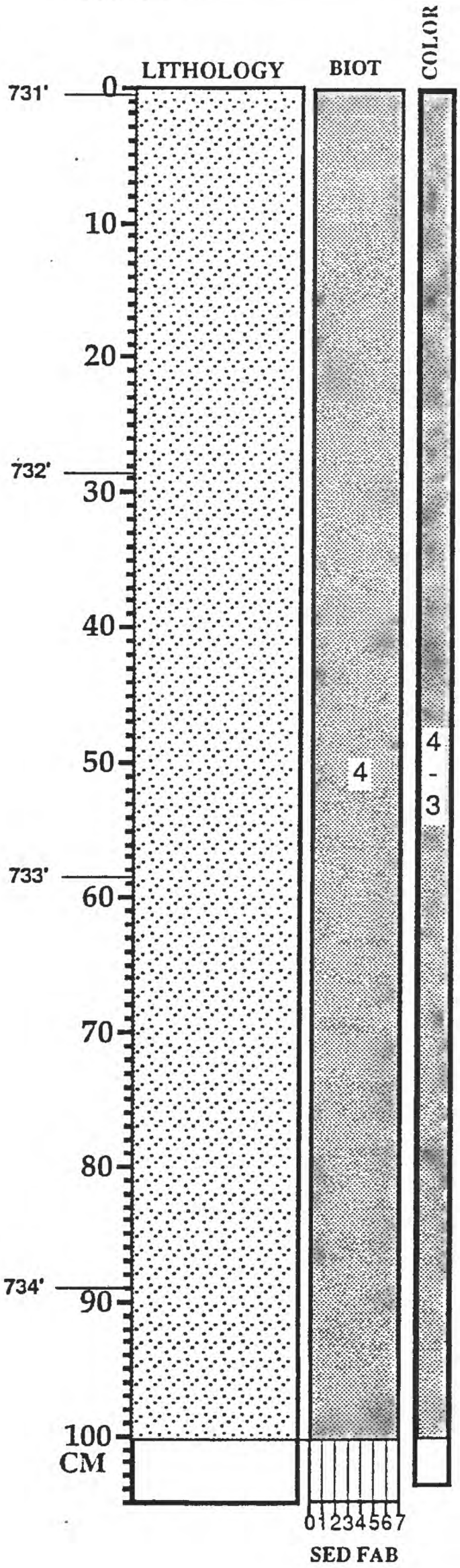

Unit 236 (cont.) - SANDSTONE as above

MAA/WED/BBS - 6/92

CORE: AMOCO Rebecca K
Bounds #1

BOX # 21a
BOX FOOTAGE 734 -744

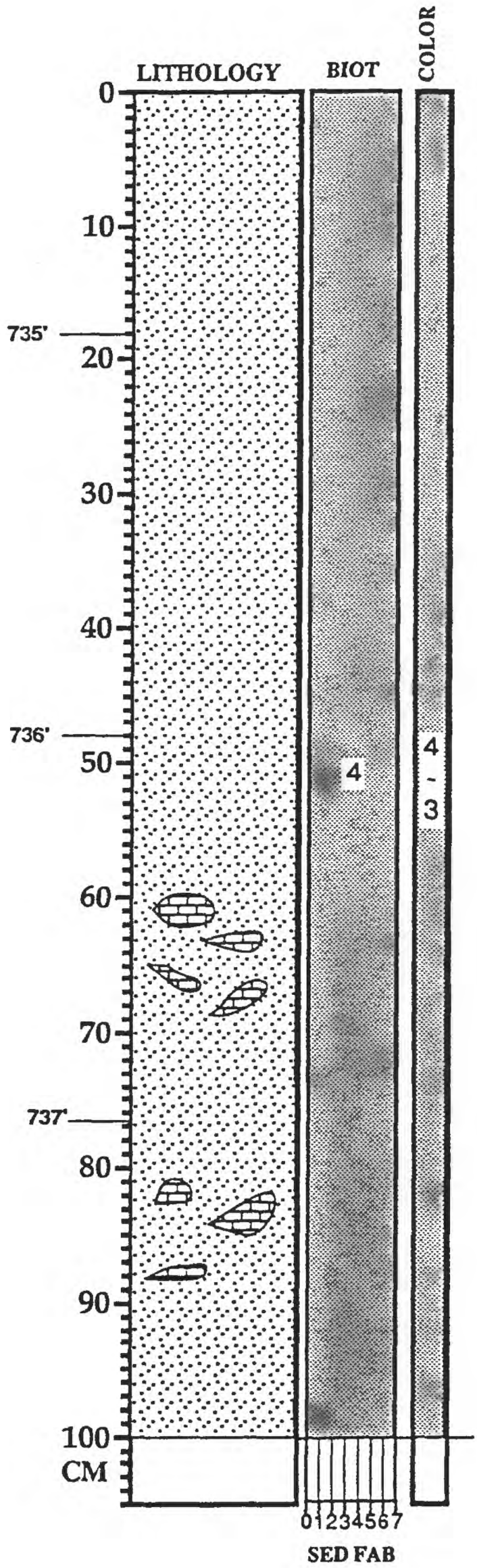

Unit 236 (cont.) - SANDSTONE as above, but sli. coarser grained and better sorted; zones of calcite cemented burrowfill @ 60-70 cm & 80-88 cm

MAA/WED/BBS - 6/92

CORE: AMOCO Rebecca K
Bounds #1

BOX # 21b

BOX FOOTAGE 734 -744

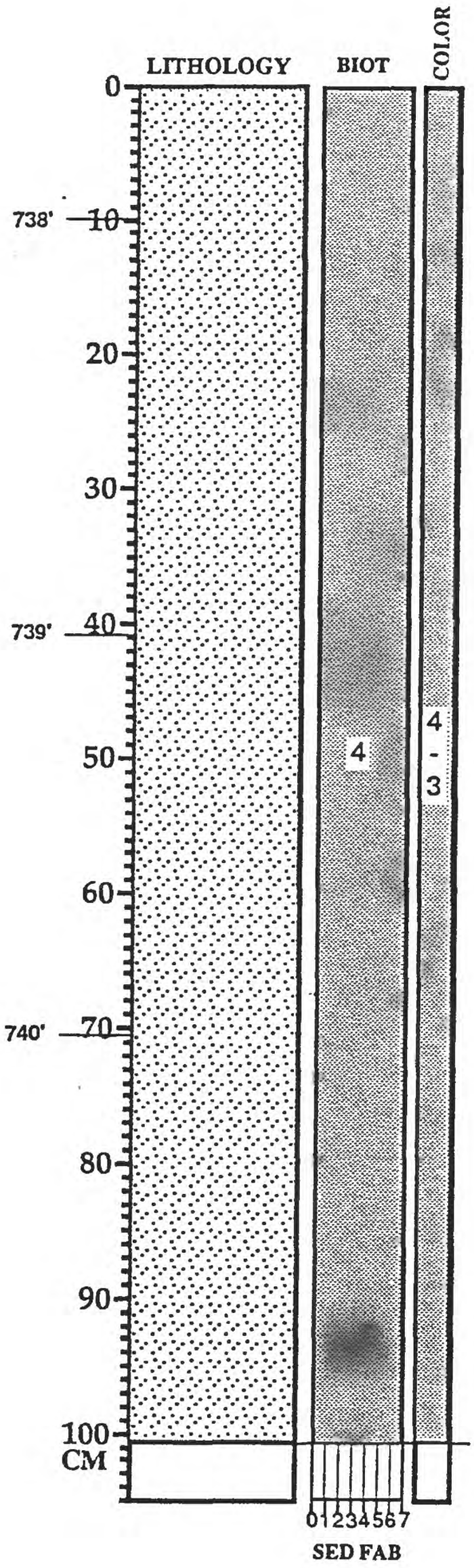

Unit 236 (cont.) - SANDSTONE as above; v. fine grained; homogeneous burrow mottling

MAA/WED/BBS - 6/92

CORE: AMOCO Rebecca K
Bounds #1

BOX # 21c
BOX FOOTAGE 734-744

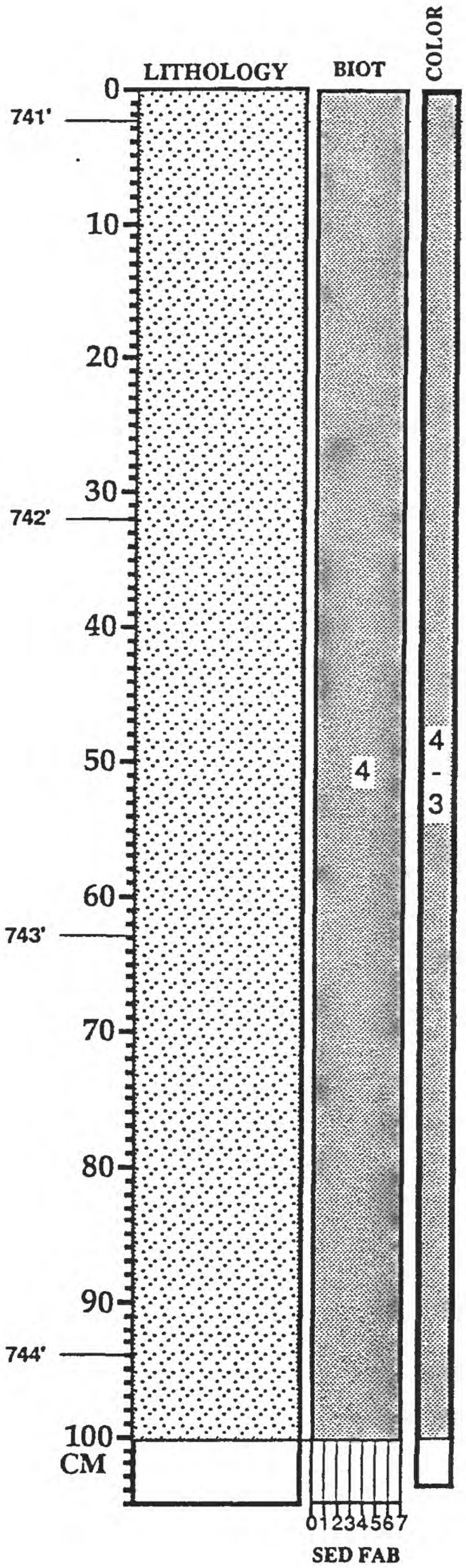

Unit 236 (cont.) - SANDSTONE as above

MAA/WED/BBS - 6/92

CORE: AMOCO Rebecca K
Bounds #1

BOX # 22a
BOX FOOTAGE 744 -754

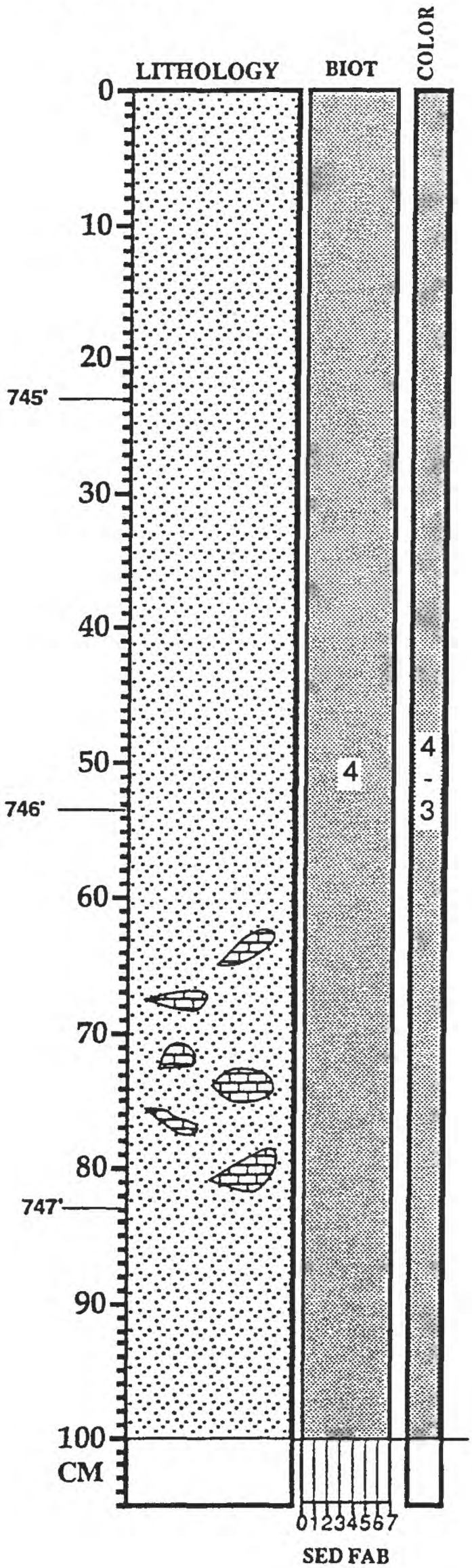

Unit 236 (cont.) - SANDSTONE as above; zones of calcite cemented burrowfill @ 63-83 cm

MAA/WED/BBS - 6/92

CORE: AMOCO Rebecca K
Bounds #1

BOX # 22b

BOX FOOTAGE 744 -754

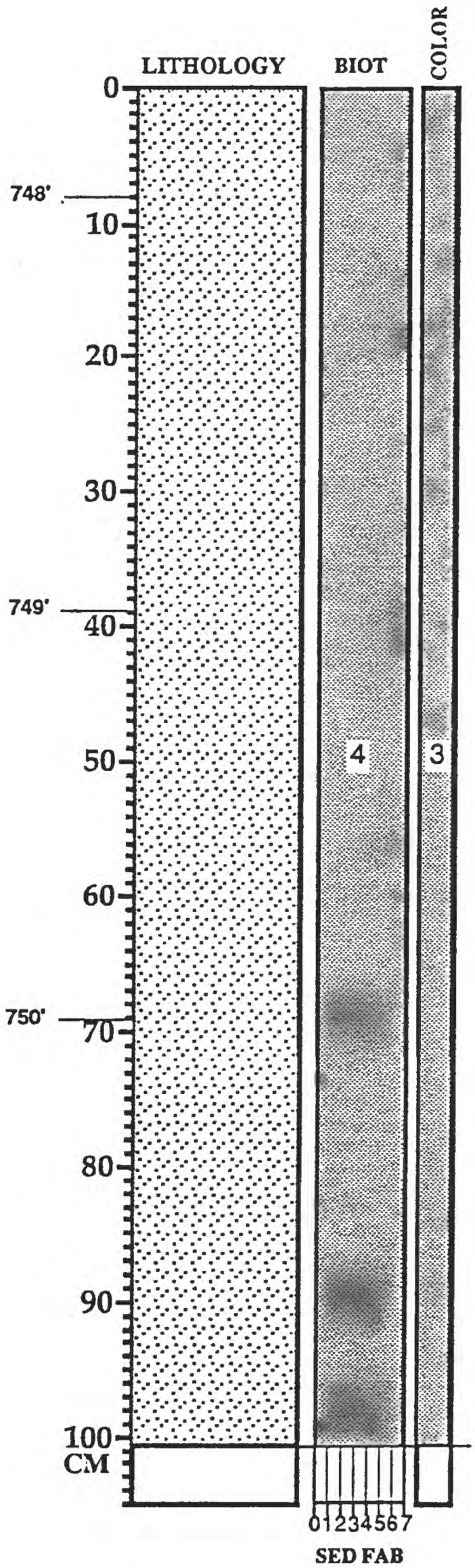

Unit 236 (cont.) - SANDSTONE as above; v. fine grained; grading slowly downward into very fine-grained SANDSTONE-SILTSTONE

MAA/WED/BBS - 6/92

CORE: AMOCO Rebecca K
Bounds #1

BOX # 22c
BOX FOOTAGE 744-754

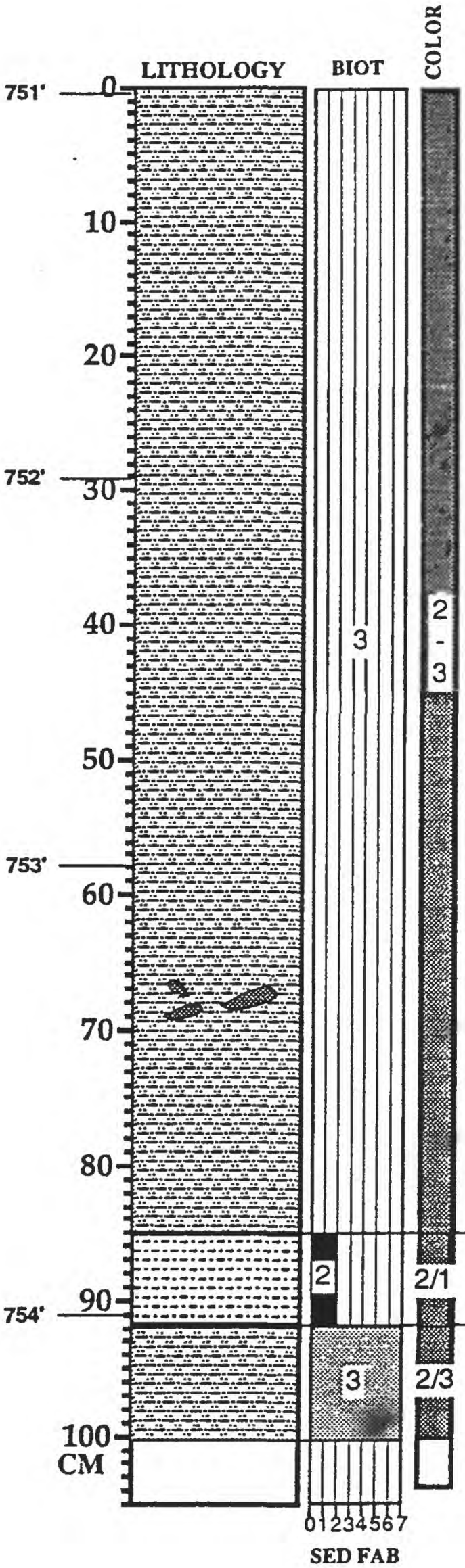

Unit 236 (cont.) - very fine-grained; quartzose SANDSTONE-SILTSTONE; argillaceous; homogeneous to burrowed 0/4; ol. gry. to lt. ol. gry. (2/3); greater bedding parallel fracture; lower contact sharp

fine-grained sand burrow fill

6580..5 cm

Unit 237 - 6.5 cm; MUDSTONE; mod. lamin. w/ silty layers; microbioturb.; ol. gry. to ol. black (2/1); lower contact sharp

6587 cm

Unit 238 - 20 cm; v. fine-grained SANDSTONE-SILTSTONE similar to Unit 236

MAA/WED/BBS - 6/92

CORE: AMOCO Rebecca K
Bounds #1

BOX # 23a
BOX FOOTAGE 754 -765

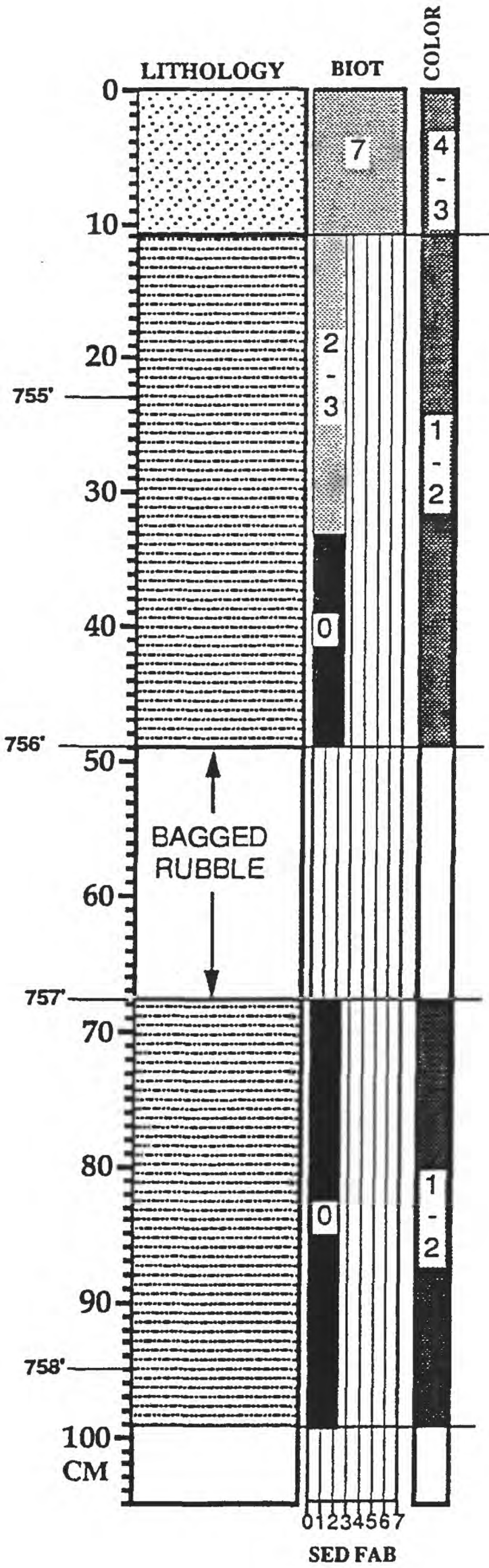

Unit 238 (cont.) - SANDSTONE-SILTSTONE as above; l. contact sharp

6607 cm BASE OF CODELL SANDSTONE

TOP OF BLUEHILL SHALE MBR.
OF THE CARLILE FM.

Unit 239 -107 cm; MUDSTONE; fissile; mod. to poorly laminated (2/3) w/ Plano, Chond., & Teich. burrows in upper 34 cm pipe down lighter colored sediment; ol. gry. to ol. blk. (1/2)

MAA/WED/BBS - 6/92

CORE: AMOCO Rebecca K
Bounds #1

BOX # 23b

BOX FOOTAGE 754 -765

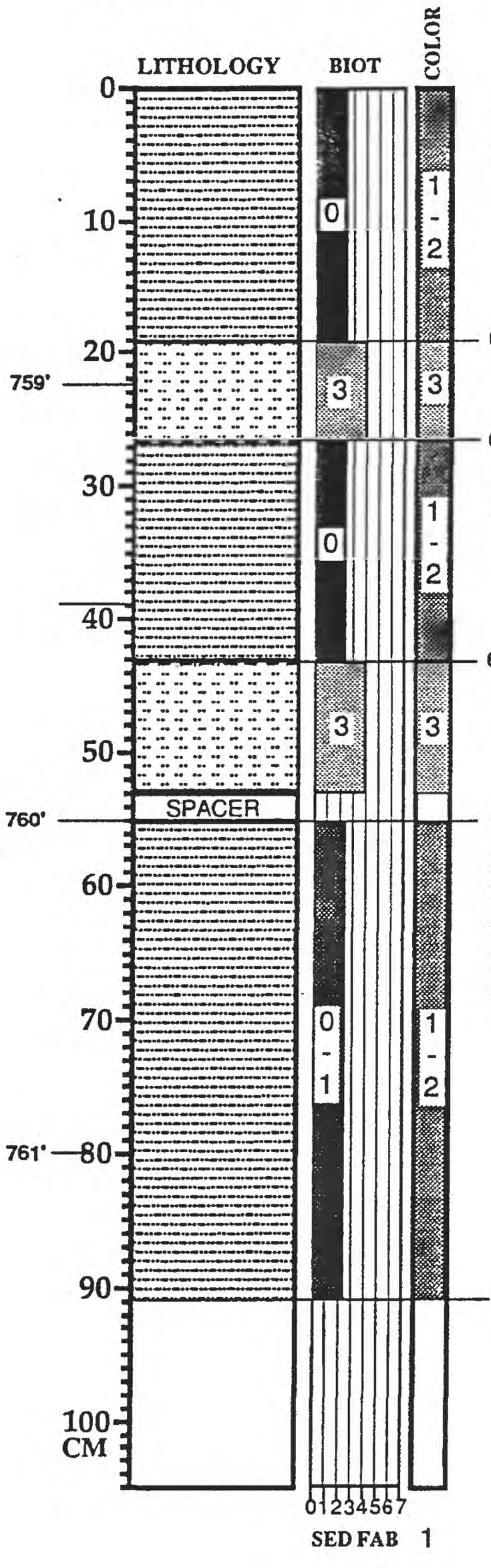

Unit 239 (cont.) - MUDSTONE as above; l. cont. grad. over 1 cm

6714 cm

Unit 240 - 7cm; SILTSTONE; burrowed w/ lg. Plano. & Chond. burrows (3); l. cont. grad. over 1 cm

6721 cm

Unit 241 - 16.5 cm; MUDSTONE as above (Unit 239); l. cont. grad. over 1 cm

6737..5 cm

Unit 242 - 10cm; SILTSTONE; burrowed w/ lg. Plano. & Chond. burrows (3); l. cont. grad. over 1 cm

6747..5 cm

Unit 243 - 57 cm; MUDSTONE w/ zones of sli. calcareous MUDSTONE; mod. to poorly laminated; (2/3); homogeneous to microbioturbated (0/1); lnos. common i bedding planes (fragments and whole thin-shelled individuals); ol. gry. to ol. blk. (1/2)

MAA/WED/BBS - 6/92

CORE: AMOCO Rebecca K
Bounds #1

BOX # 23c
BOX FOOTAGE 754-765

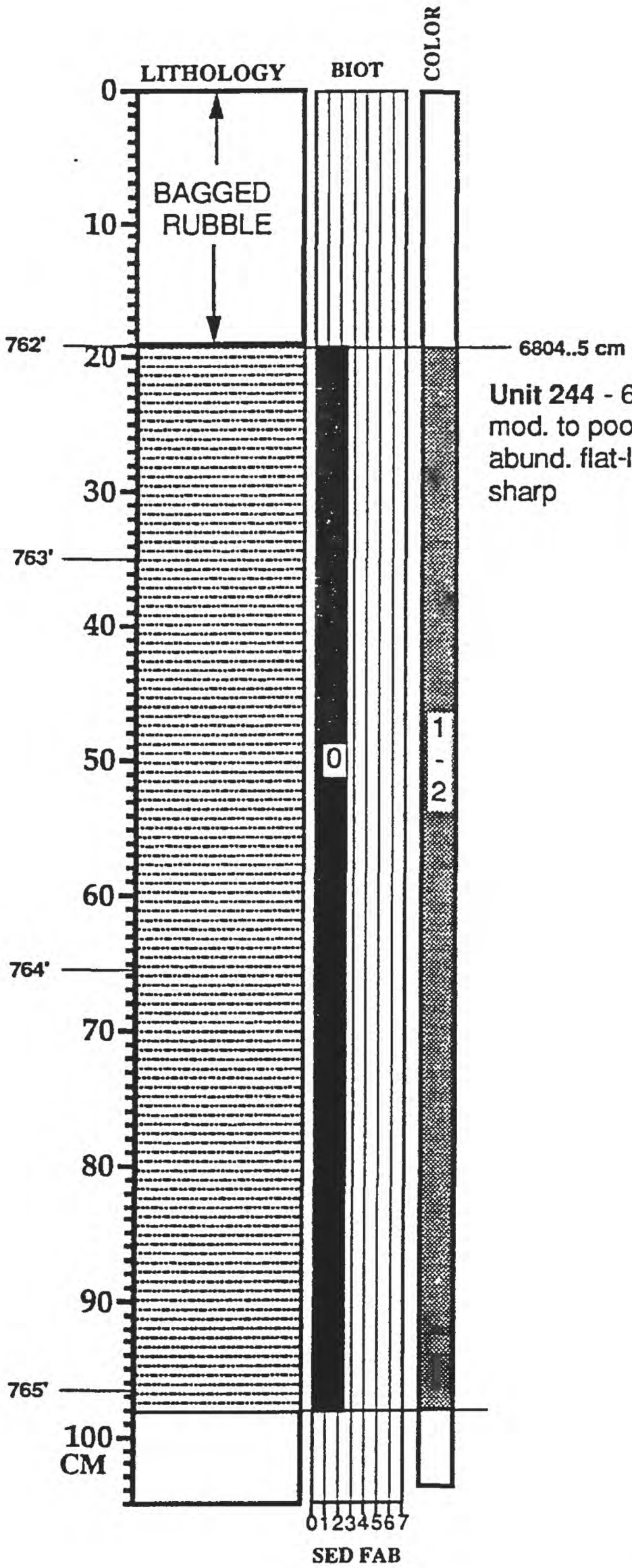

Unit 244 - 622.5 cm; MUDSTONE; sli. silty; micaceus; fissile; mod. to poorly laminated (3/2) w/ recognizable burrows (0); abund. flat-lying Ino. frags. on bedding planes; lower contact sharp

MAA/WED/BBS - 6/92

CORE: AMOCO Rebecca K
Bounds #1

BOX # 24a
BOX FOOTAGE 765 -775

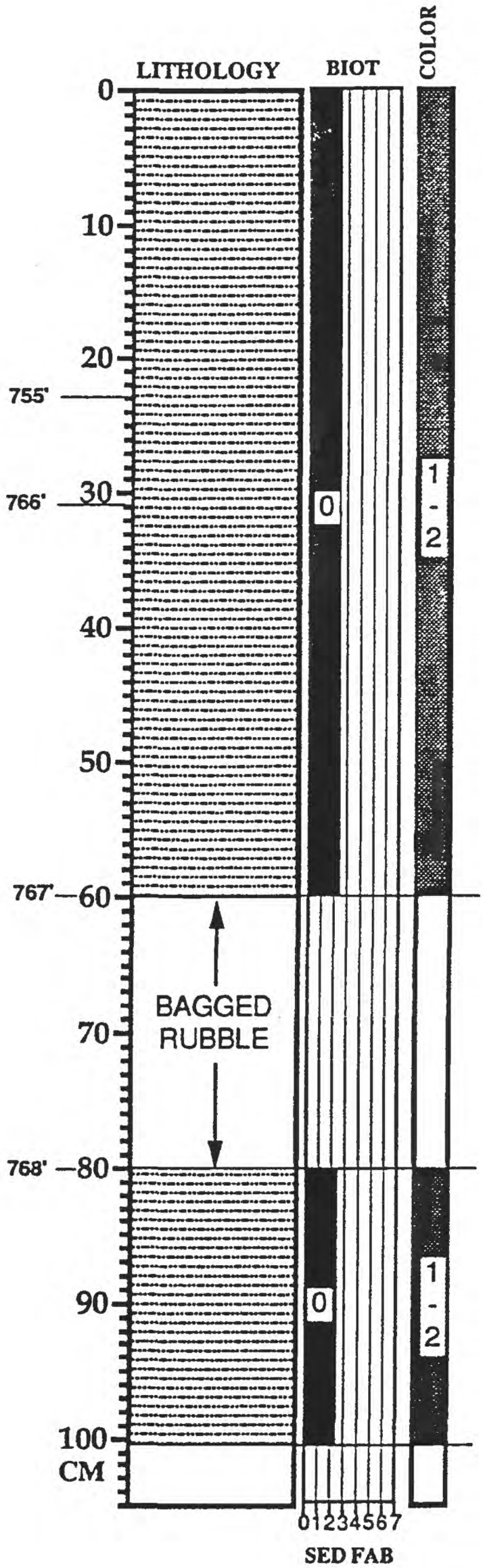

Unit 244 (cont.) -MUDSTONE as above but w/ less abundant Inos

MAA/WED/BBS - 6/92

CORE: AMOCO Rebecca K
Bounds #1

BOX # 24b

BOX FOOTAGE 765 -775

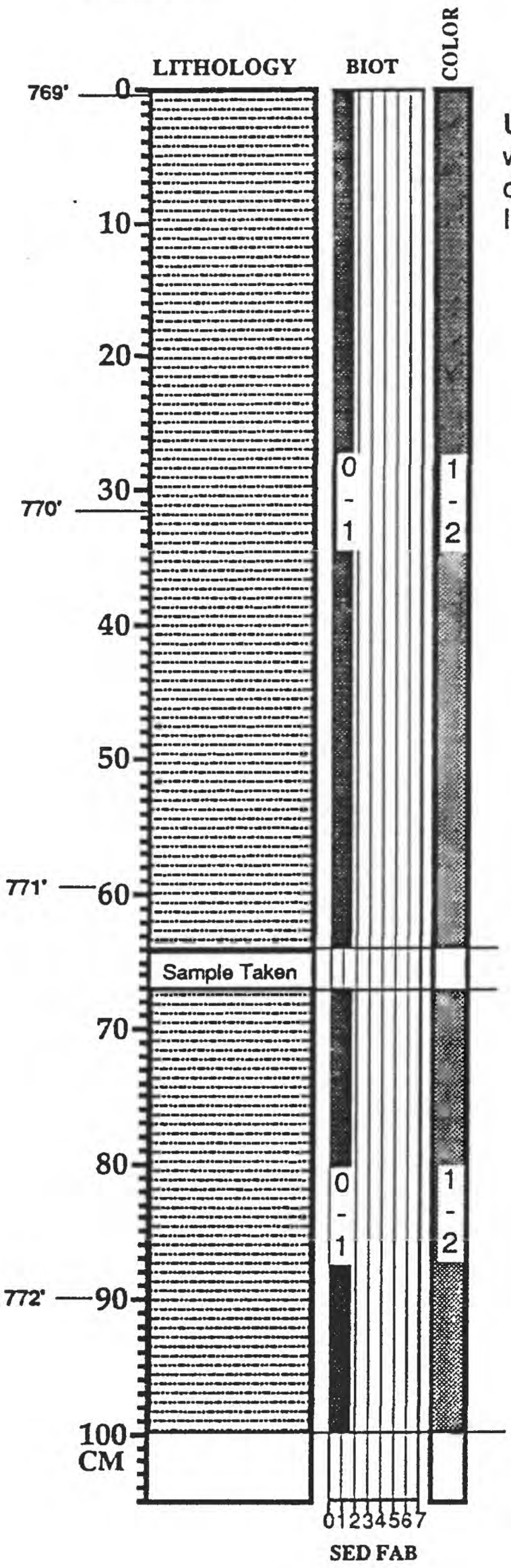

Unit 244 (cont.) - MUDSTONE as above; v. fissil; mod. to well lam. (2/1); grades down to sl. calc. mudstone; microbiot.; calcareous component concentrated in laminae; common Ino. frags. parallel to bedding

MAA/WED/BBS - 6/92

CORE: AMOCO Rebecca K
Bounds #1

BOX # 24c
BOX FOOTAGE 765-775

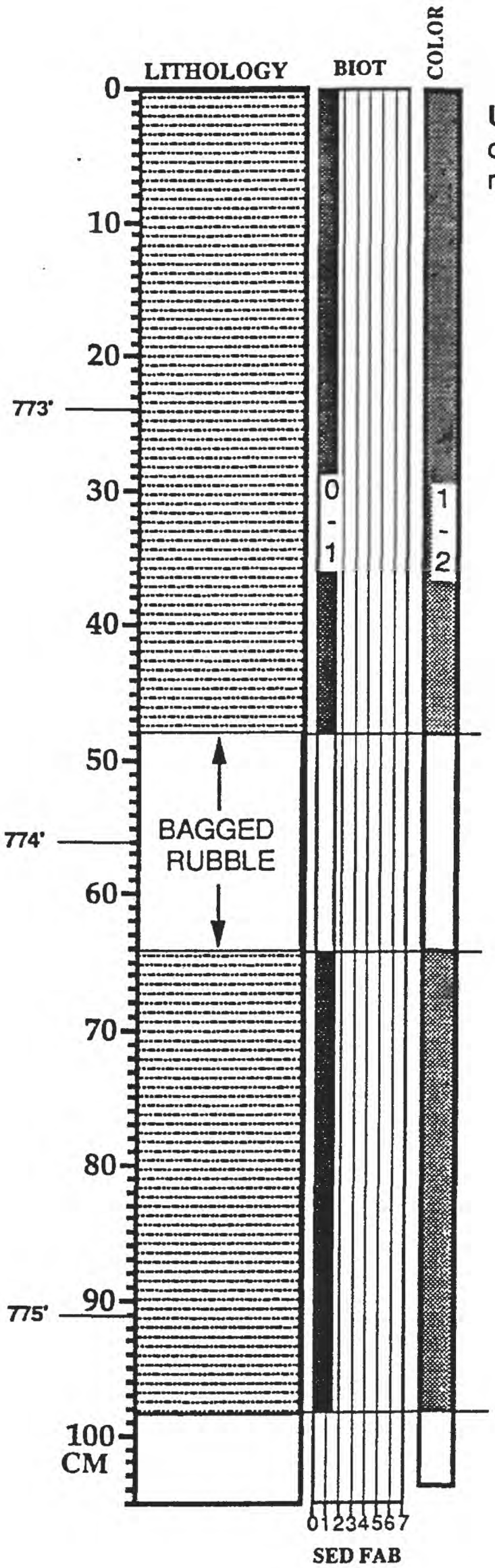

Unit 244 (cont.) - MUDSTONE as above; sli. increased. carb. content; v. rare discrete burrows (4), but mostly homogenous; rare oysters, benthic forams, and Ino. frags.

MAA/WED/BBS - 6/92

CORE: AMOCO Rebecca K
Bounds #1

BOX # 25a
BOX FOOTAGE 775 -785

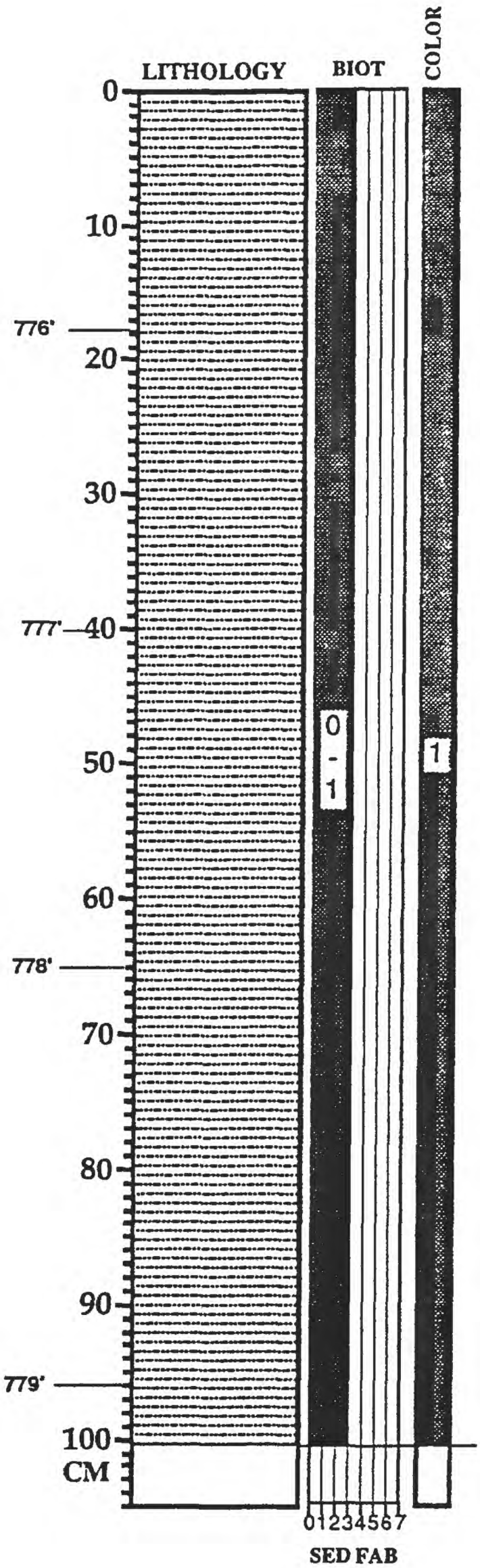

Unit 244 (cont.) -MUDSTONE as above; poorly lam. (3); ol. blk (1); sli. lower carb. content; rare small burrow fill w. Ino. prism debris

MAA/WED/BBS - 6/92

CORE: AMOCO Rebecca K
Bounds #1

BOX # 25b

BOX FOOTAGE 775 -785

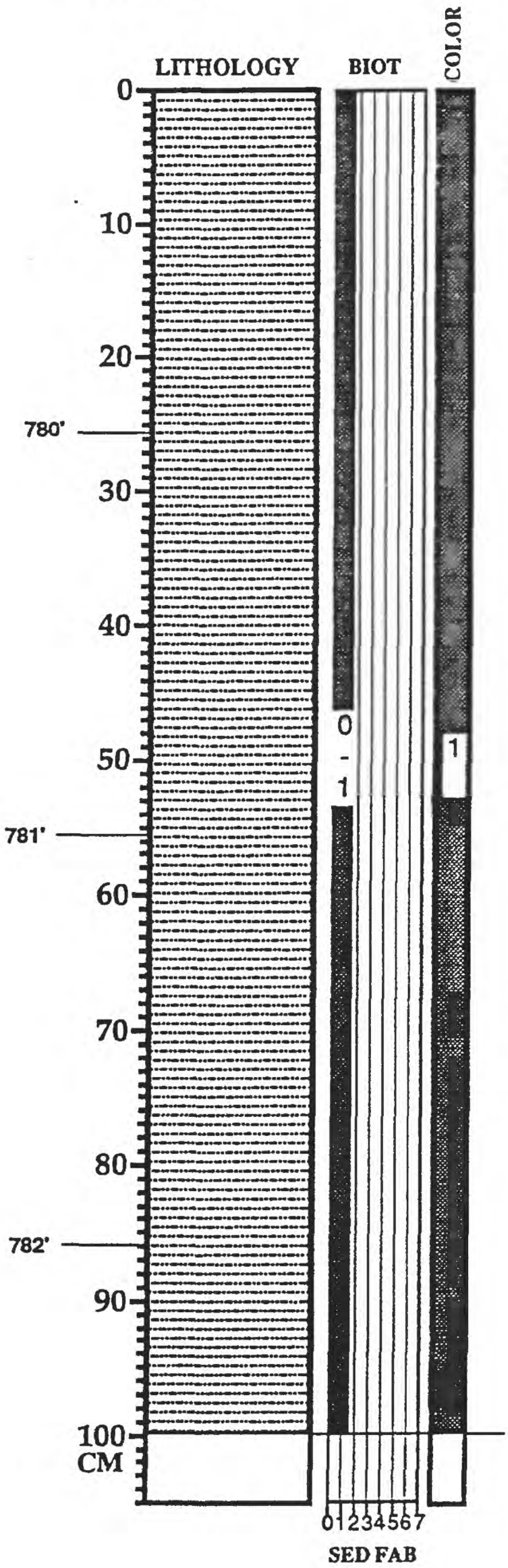

Unit 244 (cont.) - MUDSTONE as above; mod. to well lam. (2/1); sl. calc. but calc. content decreasing; some microbiot.; some Ino. debris in rare discrete burrows

MAA/WED/BBS - 6/92

CORE: AMOCO Rebecca K
Bounds #1

BOX # 25c
BOX FOOTAGE 775-785

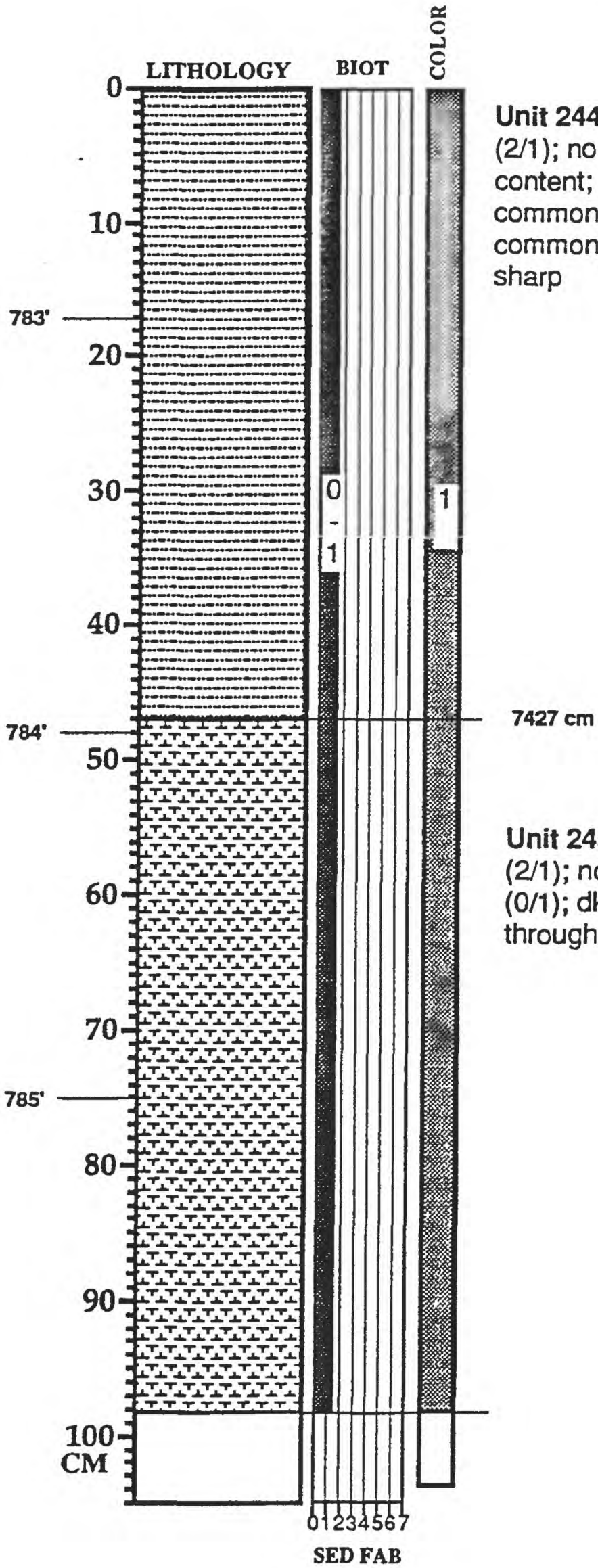

Unit 244 (cont.) - MUDSTONE as above; mod. to v. well lam (2/1); no recogniz. burrows; ol. blk. (1); sli. increased. carb. content; Ino. frags. in discrete calcarenitic layers 1-7 mm thick, commonly assoc. w/ whole Inos. or frags.; calc. layers commonly have excellently preserved oyster shells; l. contact sharp

BASE OF BLUEHILL SHALE MBR.
OF THE CARLILE FM.

TOP OF FAIRPORT SHALE MBR.
OF THE CARLILE FM.

Unit 245 - 286 cm; MARLSTONE; mod. to v. well lamin. (2/1); no recogniz. trace fossils, but prob. microburrowed (0/1); dk. ol. gry. to ol. blk. (1/2); Ino. prisms dissem. throughout; fecal pel. in discrete zones increase down core

MAA/WED/BBS - 6/92

CORE: AMOCO Rebecca K
Bounds #1

BOX # 26a
BOX FOOTAGE 785 -795

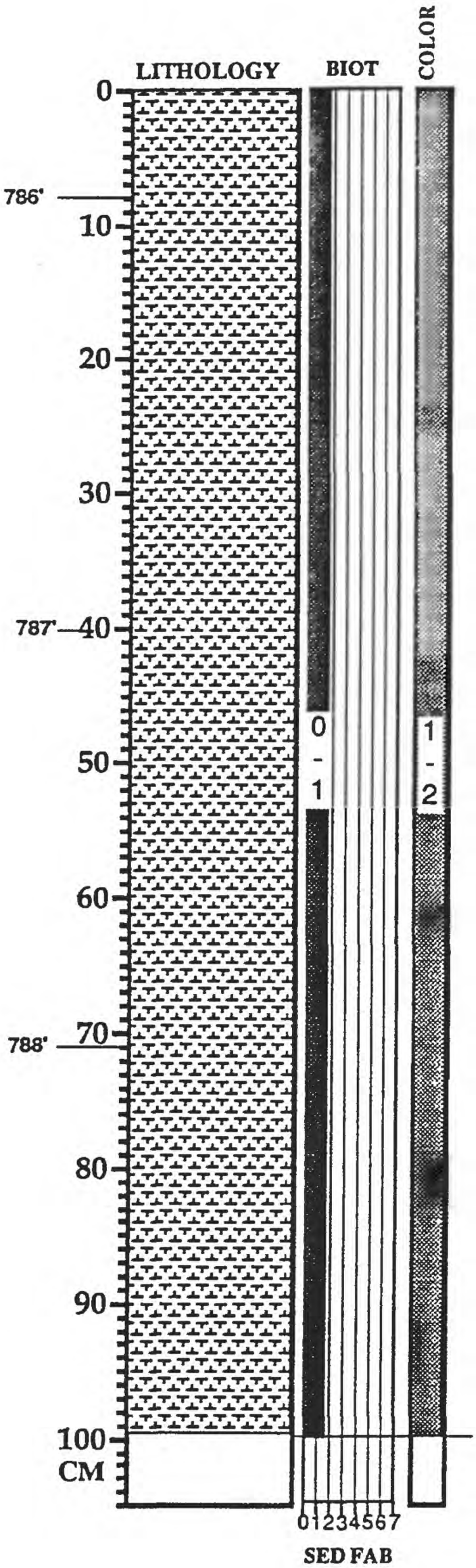

Unit 245 (cont.) - MARLSTONE; as above

MAA/WED/BBS - 6/92

CORE: AMOCO Rebecca K
Bounds #1

BOX # 26b

BOX FOOTAGE 785 -795

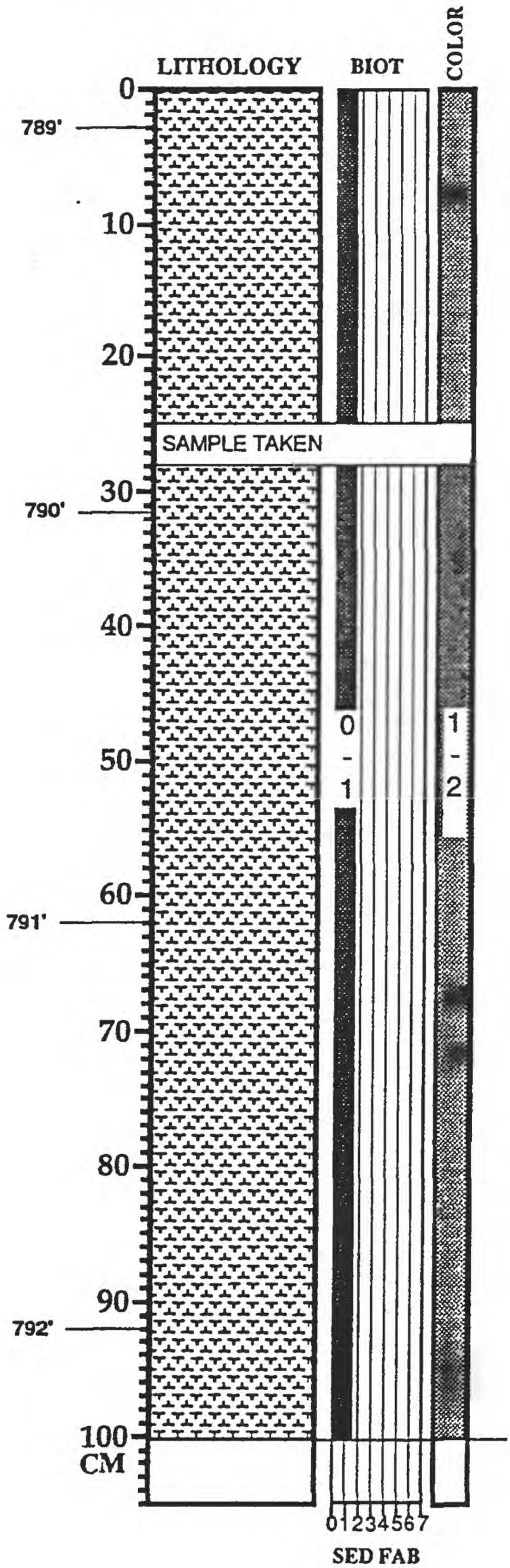

Unit 245 (cont.) - MARLSTONE; as above but w/ thin calcisilt laminae (1-2 mm) in upper 20 cm; zones of abund. fecal pellets increase downcore

MAA/WED/BBS - 6/92

CORE: AMOCO Rebecca K
Bounds #1

BOX # 26c
BOX FOOTAGE 785-795

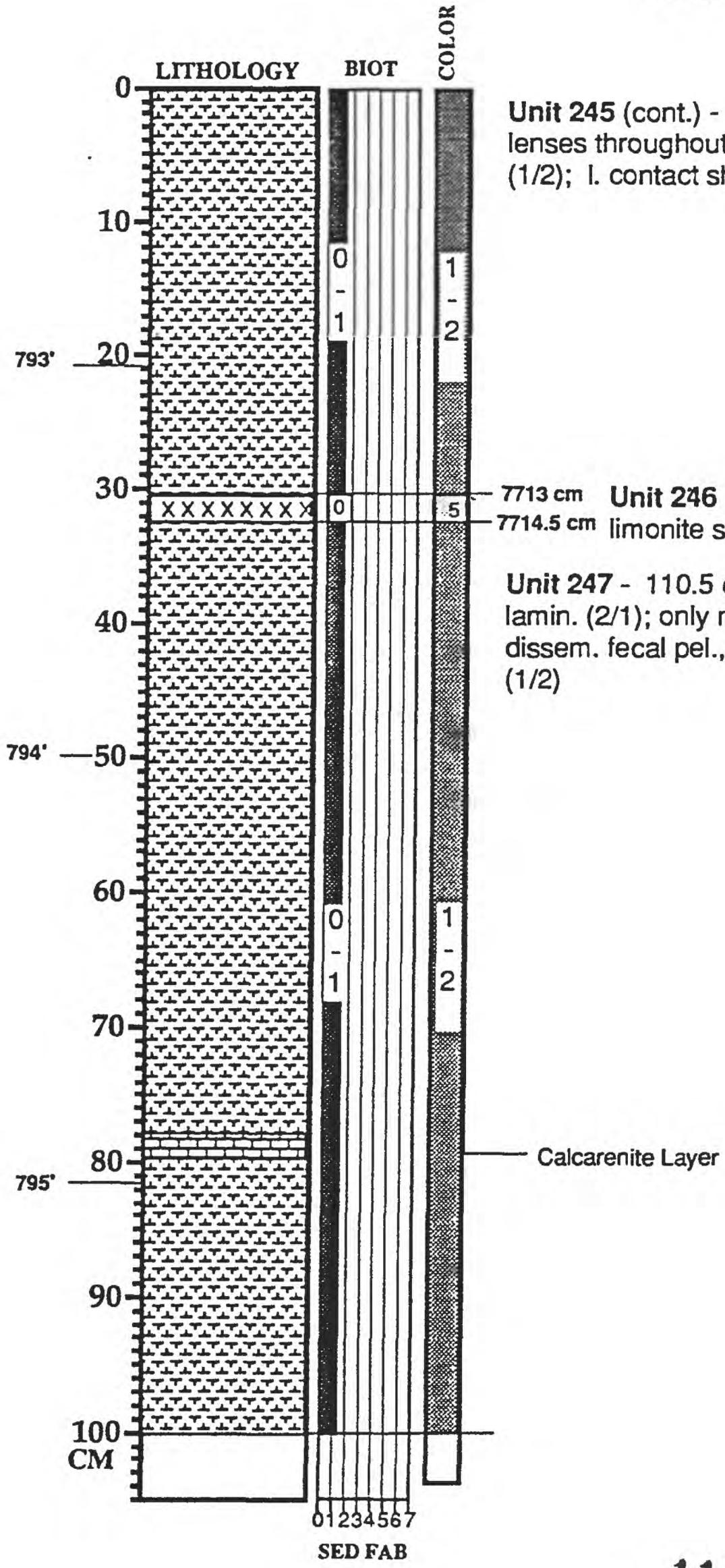

Unit 245 (cont.) - MARLSTONE; as above; thin calcarenite lenses throughout; mod. to v. well lam (2/1); ol. blk. to ol. gry. (1/2); l. contact sharp

Unit 246 - 1.5 cm BENTONITE; v. lt. gry w/ limonite staining

Unit 247 - 110.5 cm; MARLSTONE; as above; mod. to v. well lamin. (2/1); only minor bioturb. along thin bedding surfaces; dissem. fecal pel., forams, & Ino. prisms; dk. ol. gry. to ol. blk. (1/2)

MAA/WED/BBS - 6/92

CORE: AMOCO Rebecca K
Bounds #1

BOX # 27a
BOX FOOTAGE 795 -805

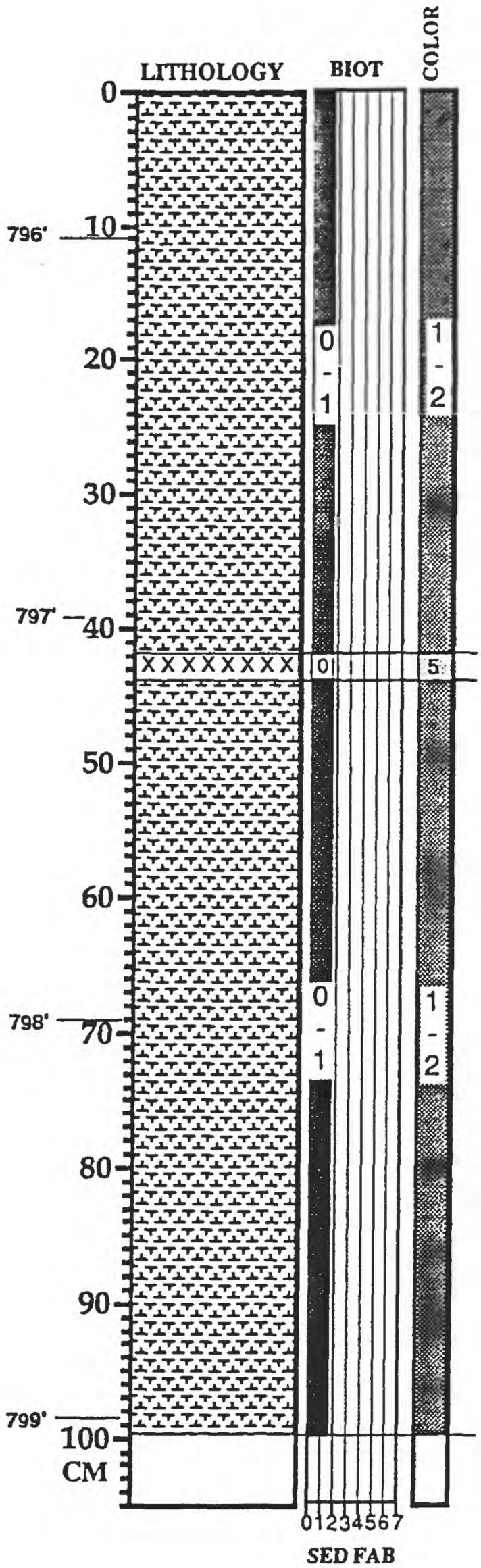

Unit 247 (cont.) - MARLSTONE; as above; rare pyrite

Unit 248 - 1.5 cm BENTONITE; v. lt. gry w/ limonite staining

Unit 249 - 87 cm; MARLSTONE; as above; abundant dissem. Ino. prisms

MAA/WED/BBS - 6/92

CORE: AMOCO Rebecca K
Bounds #1

BOX # 27b

BOX FOOTAGE 795 -805

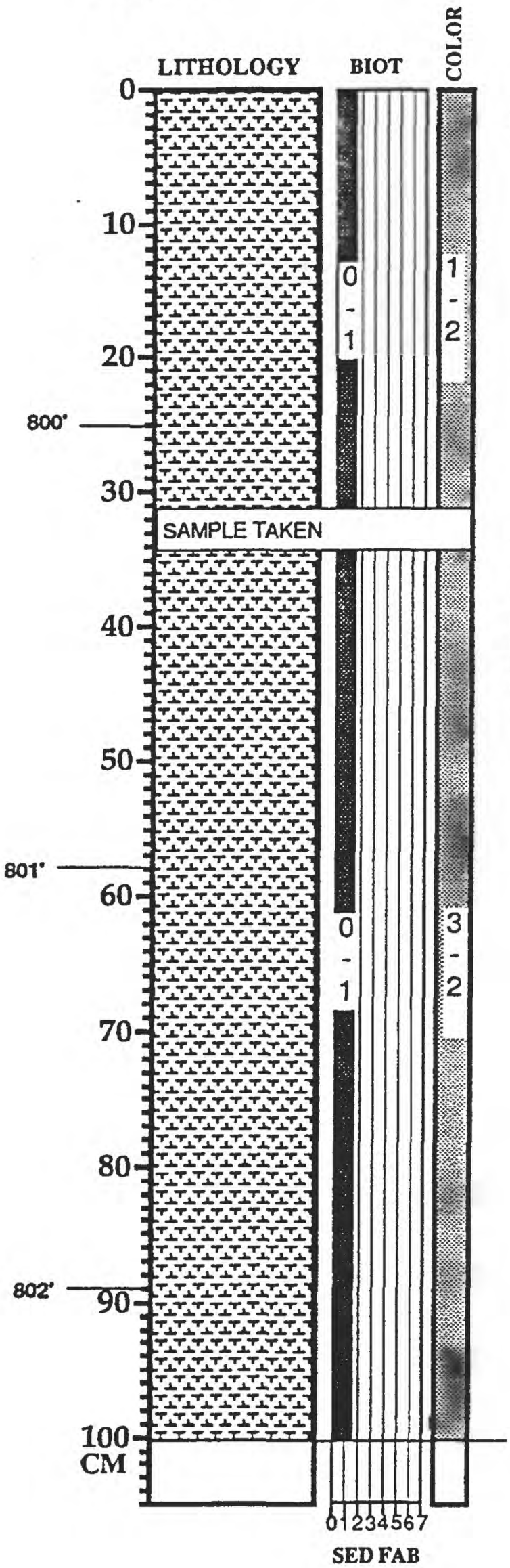

Unit 249 (cont.) - MARLSTONE; as above

Unit 250 - 2-cm BENTONITE?

Unit 251 - 178 cm; MARLSTONE; mod. to well lamin. (1/2); no trace fossils; lt. ol. gry. to ol. gry. (3/2); few to rare large Ino. frags and dissem. prisms; abund. fecal pel. & forams define laminae

MAA/WED/BBS - 6/92

CORE: AMOCO Rebecca K
Bounds #1

BOX # 27c
BOX FOOTAGE 795-805

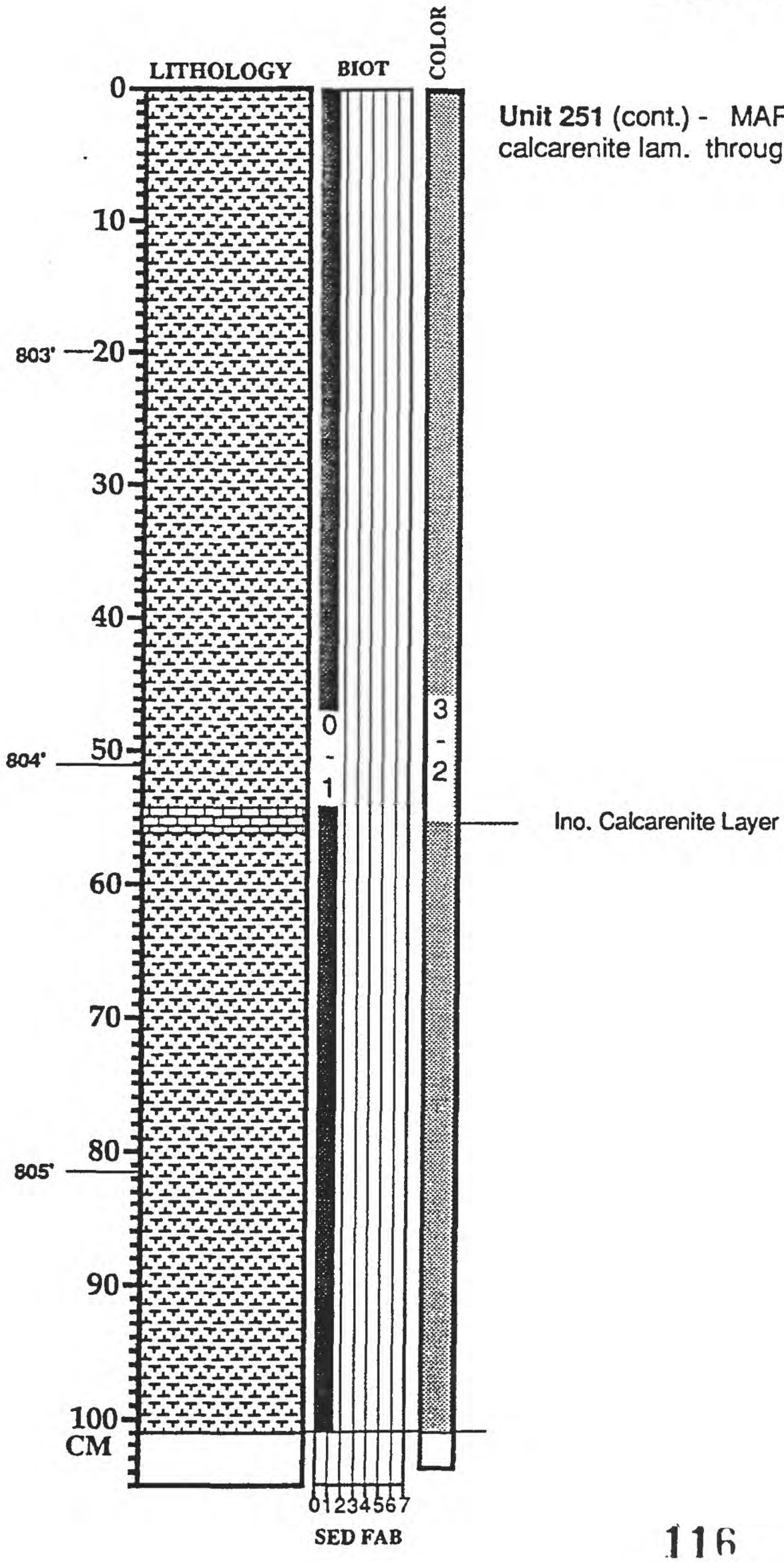

Unit 251 (cont.) - MARLSTONE as above; a few thin (1mm) calcarenite lam. throughout; fecal pel. v. abund.

MAA/WED/BBS - 6/92

CORE: AMOCO Rebecca K
Bounds #1

BOX # 28a
BOX FOOTAGE 805 -815

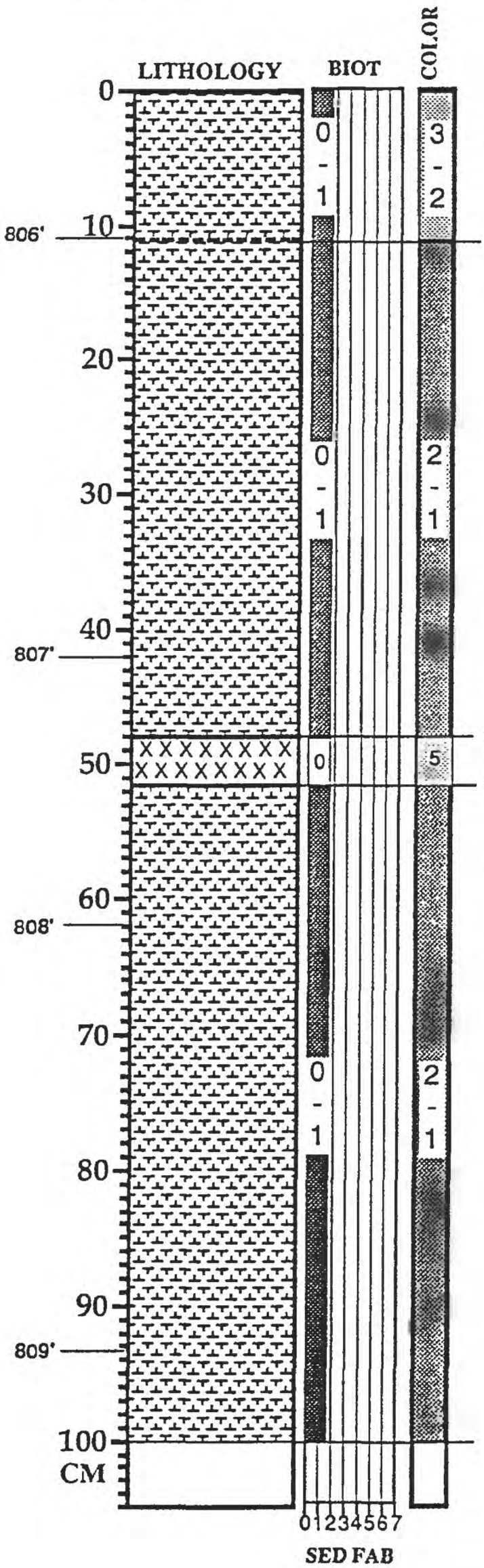

Unit 251 (cont.) - MARLSTONE; as above; l. cont. grad. over 2 cm

Unit 252 - 36 cm; MARLSTONE; similar to above but w/ 1-2 mm calcarenite units spaced 1 cm apart; abund. fecal pel. & forams; incr. abund. of oyster and Ino. frags.; l. cont. sharp

Unit 253 - 3.5 cm BENTONITE; v. lt. gry. (3 color zones w/ shades of gray); l. cont. sharp

Unit 254 - 83.5 cm; MARLSTONE; as above; but w/ fewer calcarenite laminae and >oyster debris; interval of abund. white fecal pel.; v. well to mod. lam. abund. dissem. Ino. prisms

MAA/WED/BBS - 6/92

CORE: AMOCO Rebecca K
Bounds #1

BOX # 28b

BOX FOOTAGE 805 -815

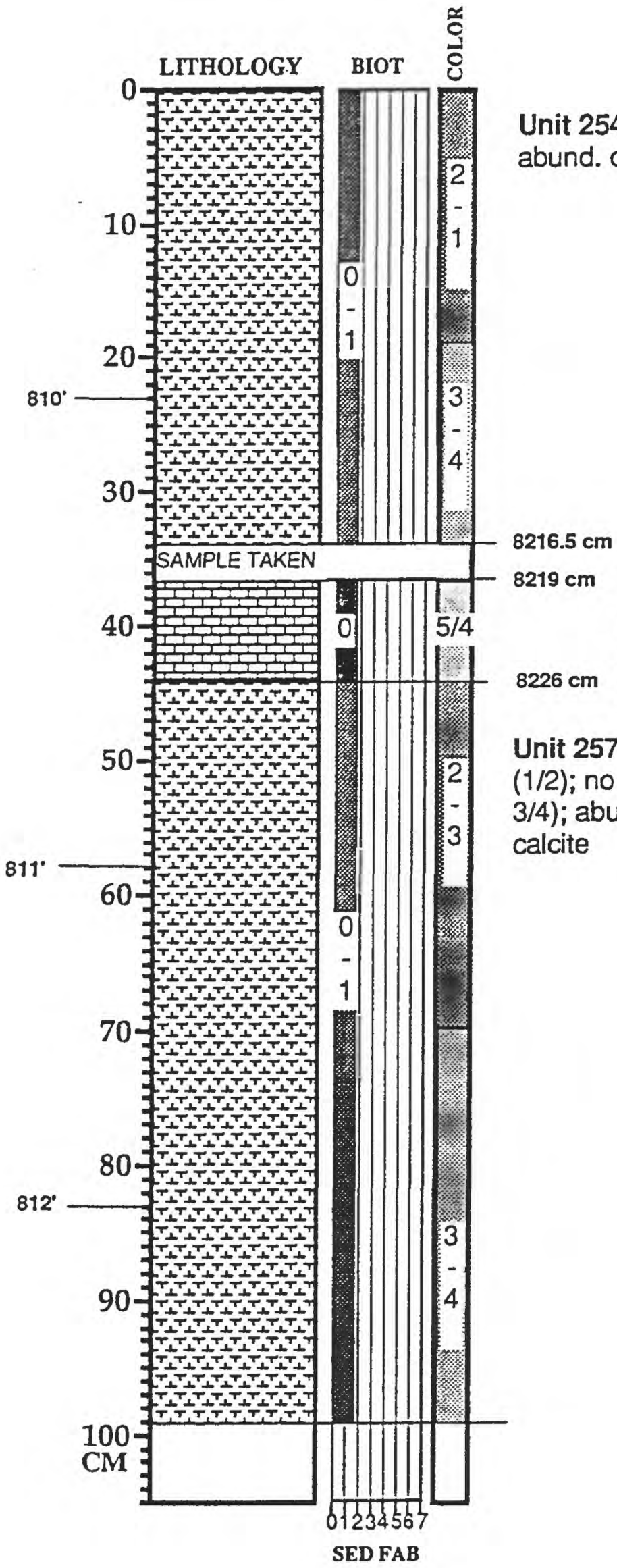

Unit 254 (cont.) - MARLSTONE; as above but w/ more abund. oyster debris and calcarenite layers

Unit 255 - 2.5-cm BENTONITE?

Unit 256 - 7-cm; CALCARENITE; no burrows; v. lt. gry. to lt. gry. (5/4); graded; oyster and Ino. debris at top; some fecal pel., forams, & shell debris; l. cont. sharp

Unit 257 - 264.5 cm; MARLSTONE; mod. to well lamin. (1/2); no trace fossils; ol gry. to lt. ol. gry. to yel. gry. (2/3; 3/4); abund. fecal pel. & plank. forams w/ tests filled w/ calcite

MAA/WED/BBS - 6/92

CORE: AMOCO Rebecca K
Bounds #1

BOX # 28c
BOX FOOTAGE 805-815

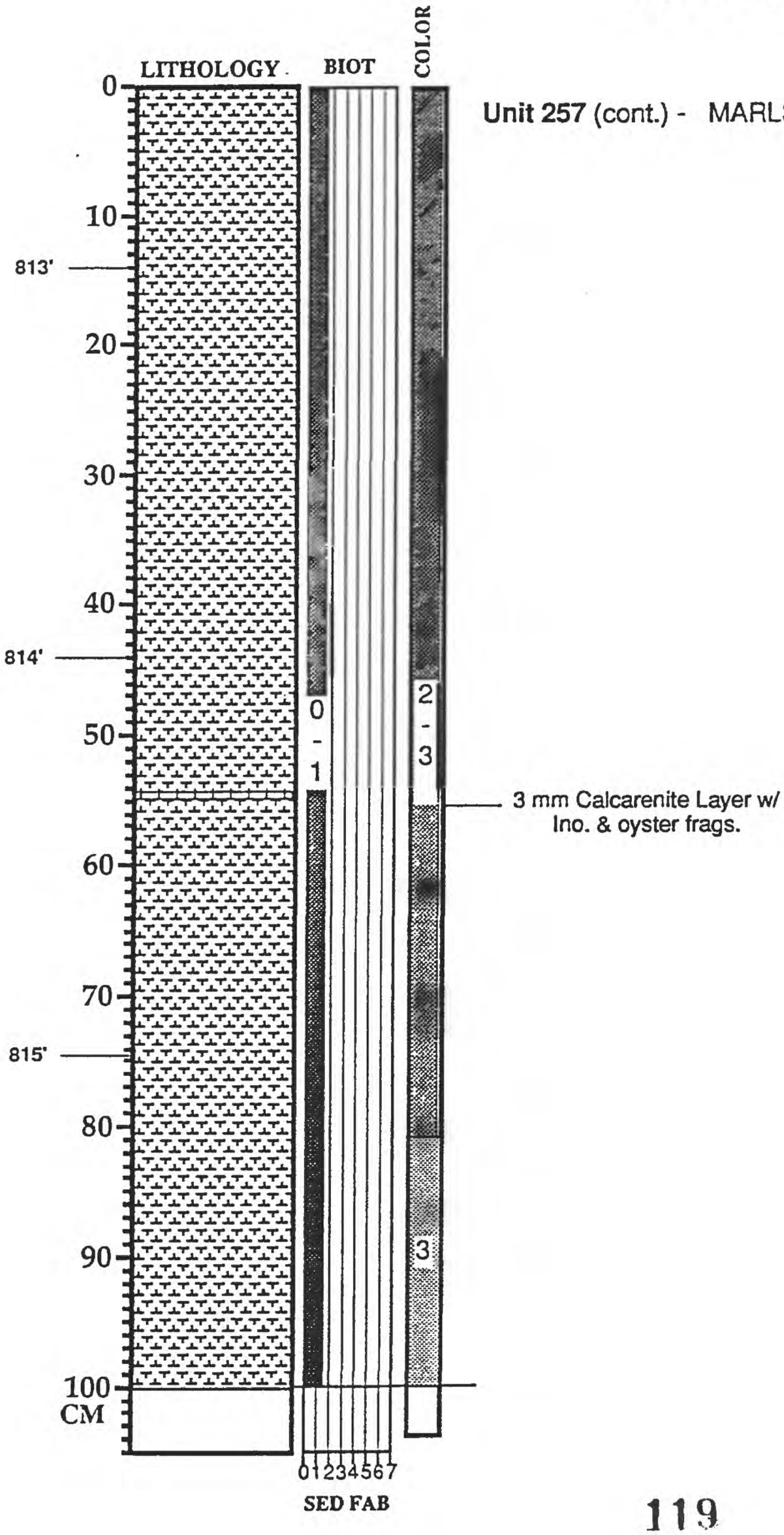

MAA/WED/BBS - 6/92

CORE: AMOCO Rebecca K
Bounds #1

BOX # 29a
BOX FOOTAGE 815 -825

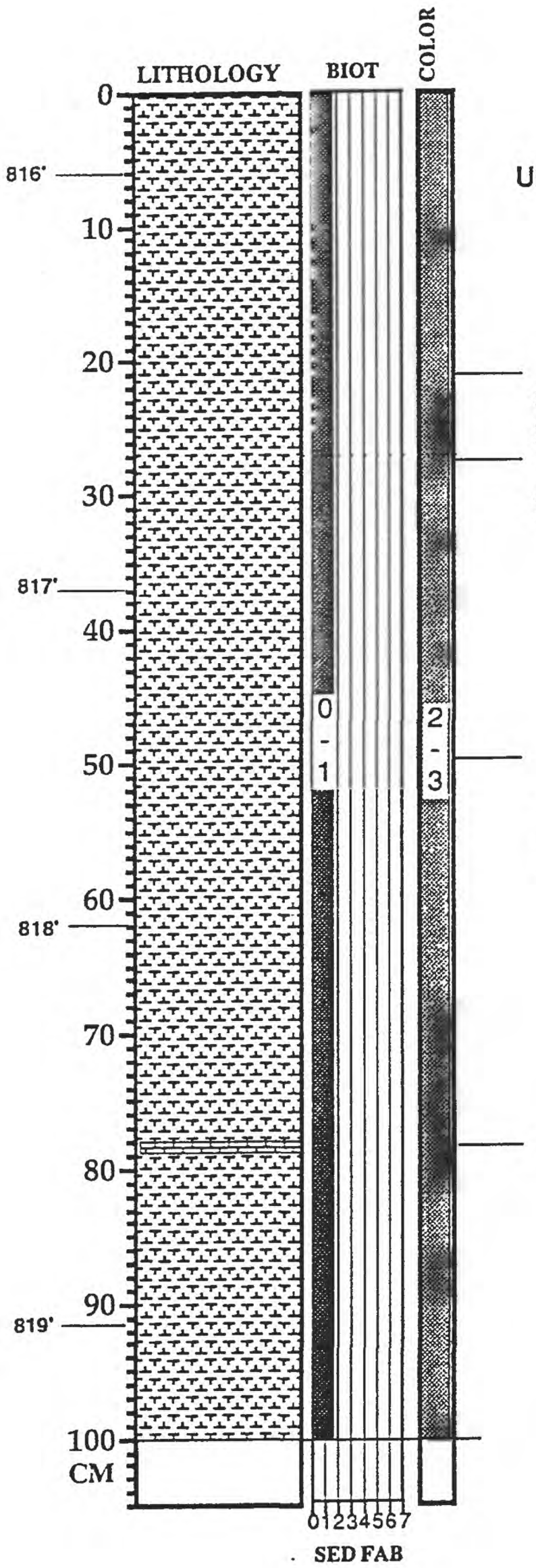

Unit 257 (cont.) - MARLSTONE as above

abund. oysters and Inos.; thin calcarenite lenses; abund. planktonic forams

few oysters; abund. forams

v. abund. oysters; 1 mm calcarenite lenses; Inos forams, fecal pel. v. abund. but decrease in abund. down core

calcarenite lens

MAA/WED/BBS - 6/92

CORE: AMOCO Rebecca K
Bounds #1

BOX # 29b

BOX FOOTAGE 815 -825

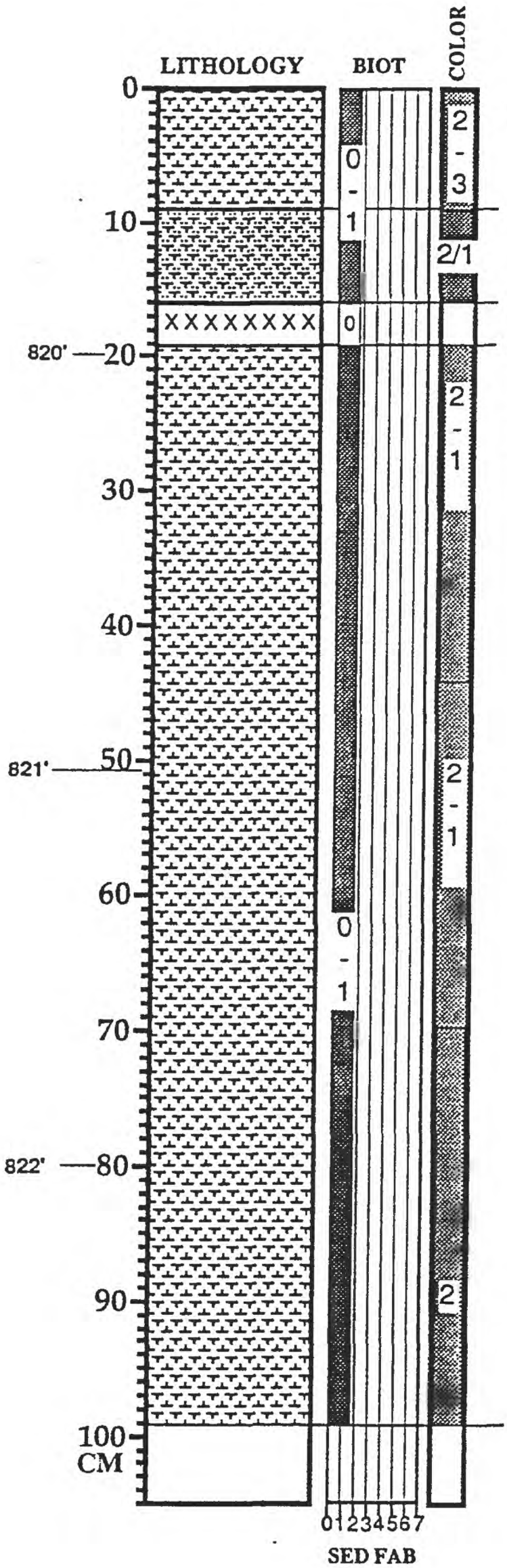

Unit 257 (cont.) - MARLSTONE as above; l. contact sharp

8490.5 cm

Unit 258 - 7cm ; CALCAREOUS MUDSTONE; well to mod. lam. (1/2); no ichnofauna (0/1); ol. gry. to ol. black (2/1); l. contact sharp

8497.5 cm

Unit 259 - 3 cm; BENTONITE; lt. grn. gry.; thin. mudstone lam. in middle; l. cont. sharp

8500.5 cm

Unit 260 - 118.5 cm; CALCAREOUS MUDSTONE to MARLSTONE; well to mod. lam. (1/2); no ichnofauna (0/1); ol. gry. to ol. black (2/1) grading down to ol. gry. (2)

MAA/WED/BBS - 6/92

CORE: AMOCO Rebecca K
Bounds #1

BOX # 29c
BOX FOOTAGE 815-825

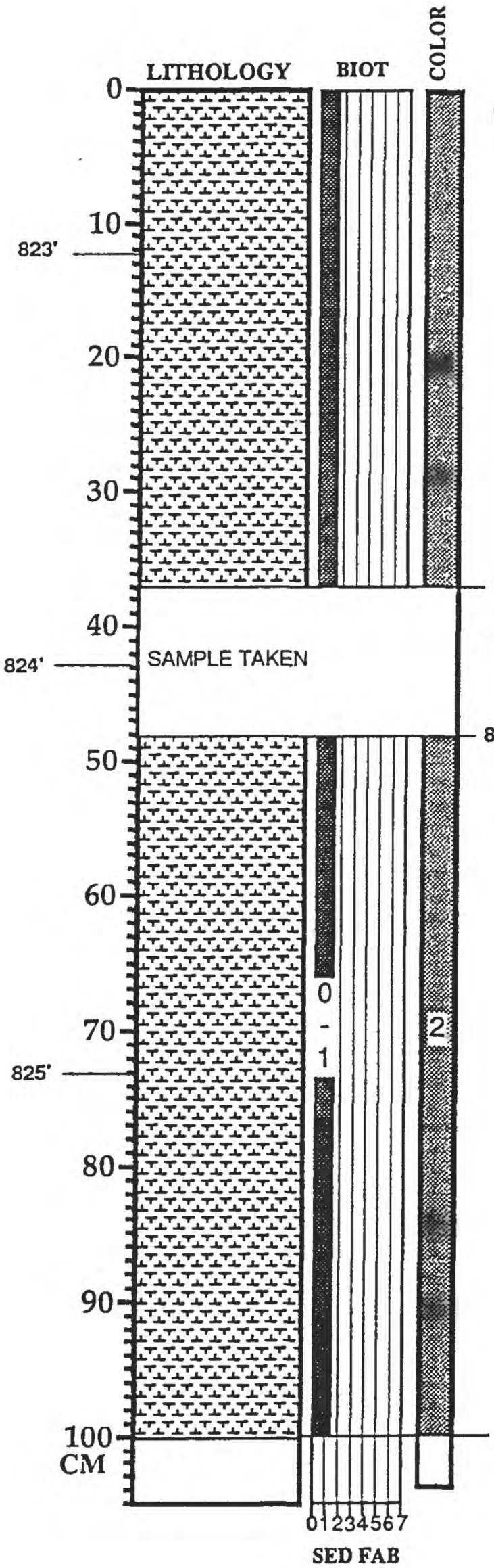

Unit 260 (cont.) - MARLSTONE as above

8619 cm

Unit 261 - 10.5 cm?; LITHOLOGY UNKNOWN

8629.5 cm

Unit 262 - 127 cm; MARLSTONE as above; well to mod. lam. (1/2); no ichnofauna (0/1); ol. gry. (2)

MAA/WED/BBS - 6/92

CORE: AMOCO Rebecca K
Bounds #1

BOX # 30a
BOX FOOTAGE 825 -836

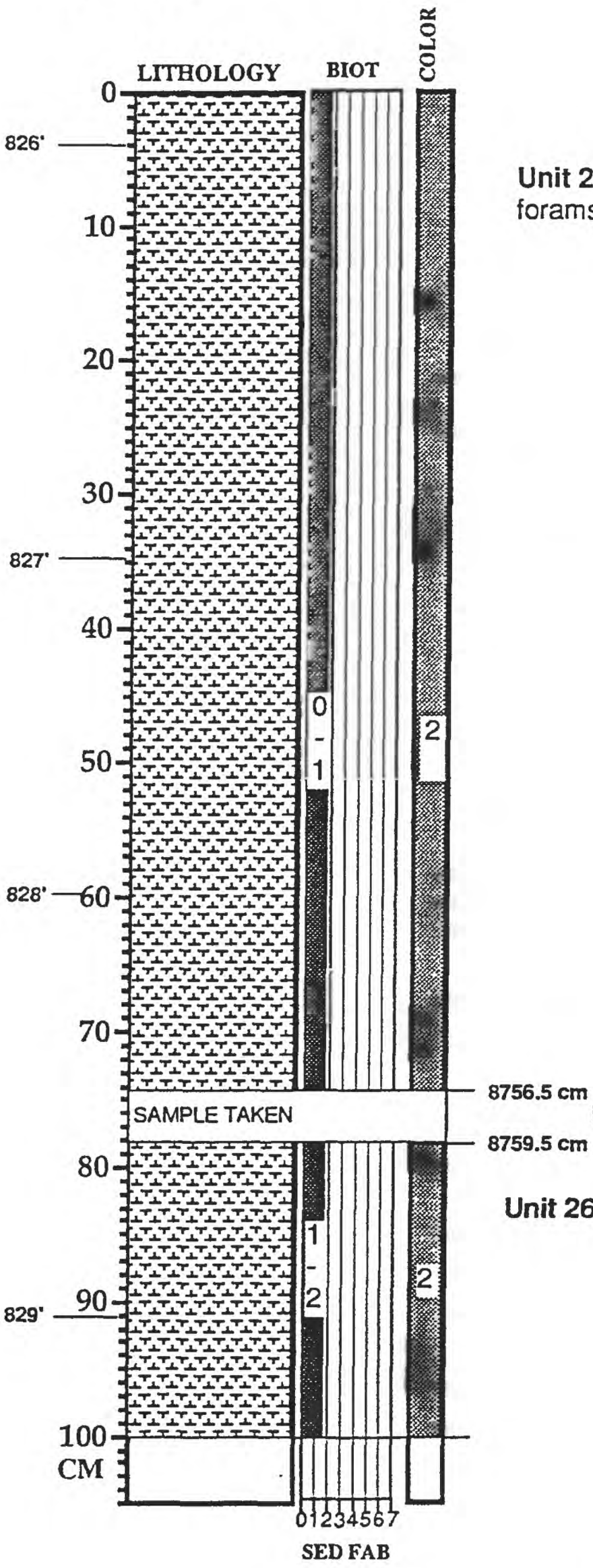

Unit 262 (cont.) - MARLSTONE as above; more abund. forams; scattered pyrite; rare oysters; some Ino. debris

8756.5 cm

Unit 263 - 3 cm?; LITHOLOGY UNKNOWN

8759.5 cm

Unit 264 (cont.) - 56.5 cm; MARLSTONE as above

MAA/WED/BBS - 6/92

CORE: AMOCO Rebecca K
Bounds #1

BOX # 30b

BOX FOOTAGE 825 -836

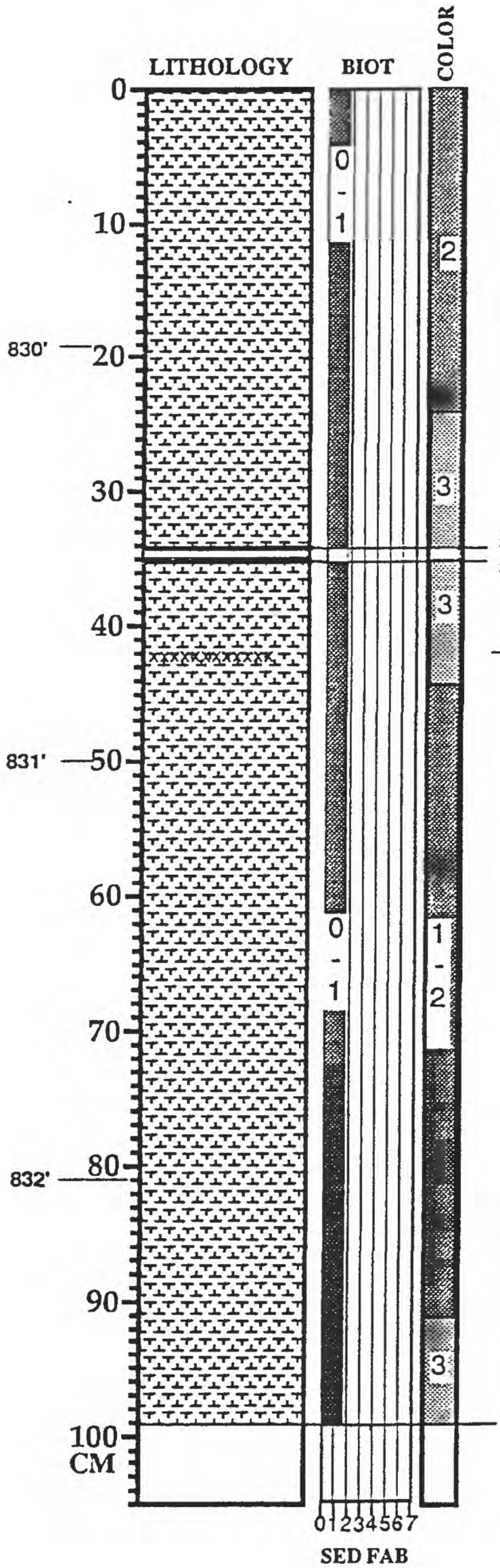

Unit 264 (cont.) - MARLSTONE as above; l. contact sharp

8816 cm
8816.5 cm
Unit 265 - 0.5 cm; BENTONITE

Unit 266 - 102cm; MARLSTONE; as above

— 1-2mm limonitic BENTONITE stringer

abund. 1-3 mm calcarenite lenses w/ Ino. and oyster debris

MAA/WED/BBS - 6/92

CORE: AMOCO Rebecca K
Bounds #1

BOX # 30c
BOX FOOTAGE 825-836

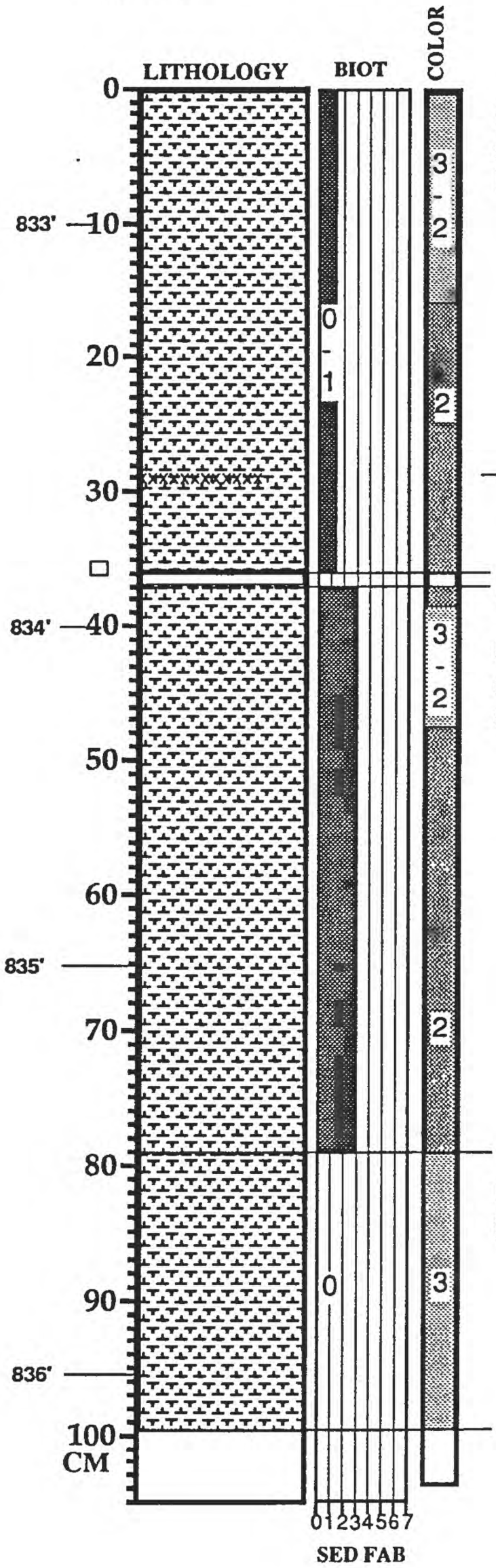

Unit 266 (cont.) - MARLSTONE as above; no calcarenite stringers; plank, forams comm. in dark layers, few in lighter layers

— 5mm BENTONITE stringer

8918.5 cm
8919.5 cm
Unit 267 - 1 cm; BENTONITE

Unit 268 - 42 cm; MARLSTONE as above; color (ol. gry to lt. ol. gry.) varies w/ abundance of plank. forams; l. contact grad. over 5 cm

8961.5 cm
Unit 269 - 22.5 cm; MARLSTONE; homog. w/ no ichnofauna (0); lt. ol. gry. (3); minor oyster debris

MAA/WED/BBS - 6/92

CORE: AMOCO Rebecca K
Bounds #1

BOX # 31a
BOX FOOTAGE 836 -846

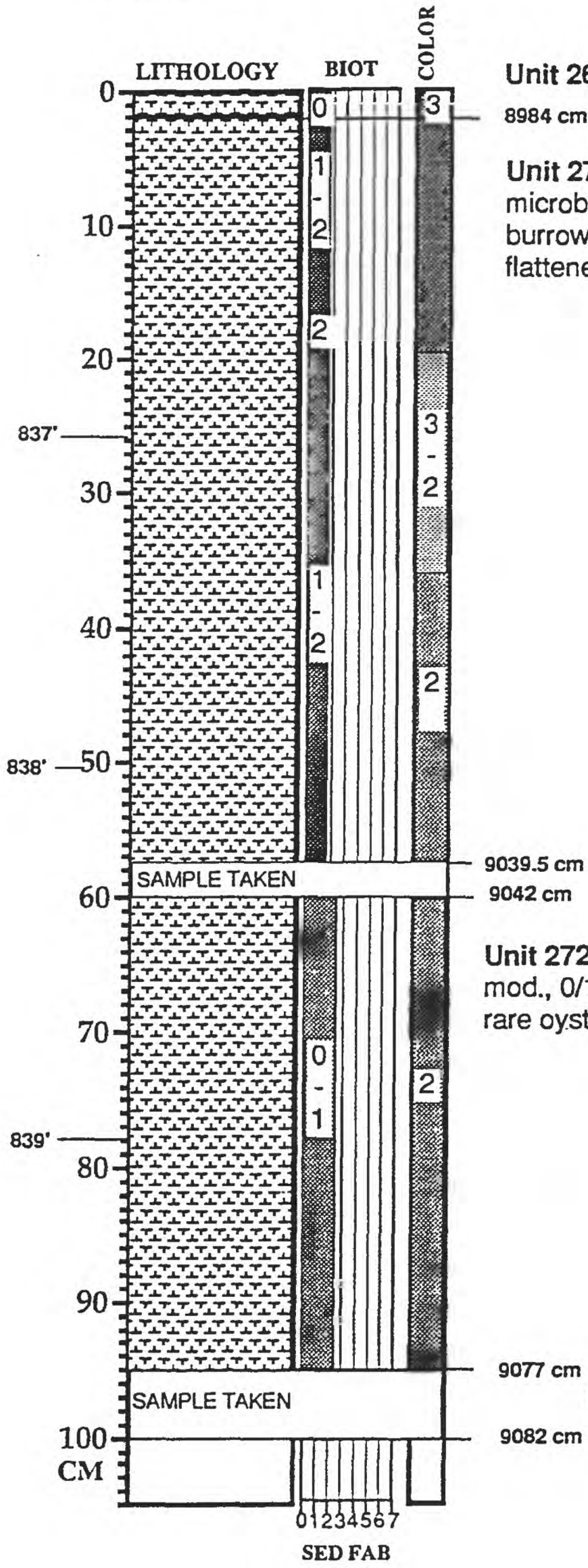

8984 cm

Unit 269 (cont.) - MARLSTONE as above; l. cont. sharp

Unit 270 - 55.5 cm; MARLSTONE; mod. to well. lam (1/2); microbioturb. (0/1) with one zone of abundant sm. Plano. burrows (2); ol. gry. (2 to 3/2); abund. plank. forams and flattened fecal pel.; minor shell debris

9039.5 cm
9042 cm

Unit 271 - 2.5 cm?; BENTONITE?

Unit 272 - 35 cm; MARLSTONE; coarsely lam. (poor. to mod., 0/1); microbioturb. (0/1); ol. gry. (2); few plank. forams; rare oyster debris at top; v. few thin calcarenite layers

9077 cm
9082 cm

Unit 273 - 5 cm?; LITHOLOGY UNKNOWN

MAA/WED/BBS - 6/92

CORE: AMOCO Rebecca K
Bounds #1

BOX # 31b

BOX FOOTAGE 836 -846

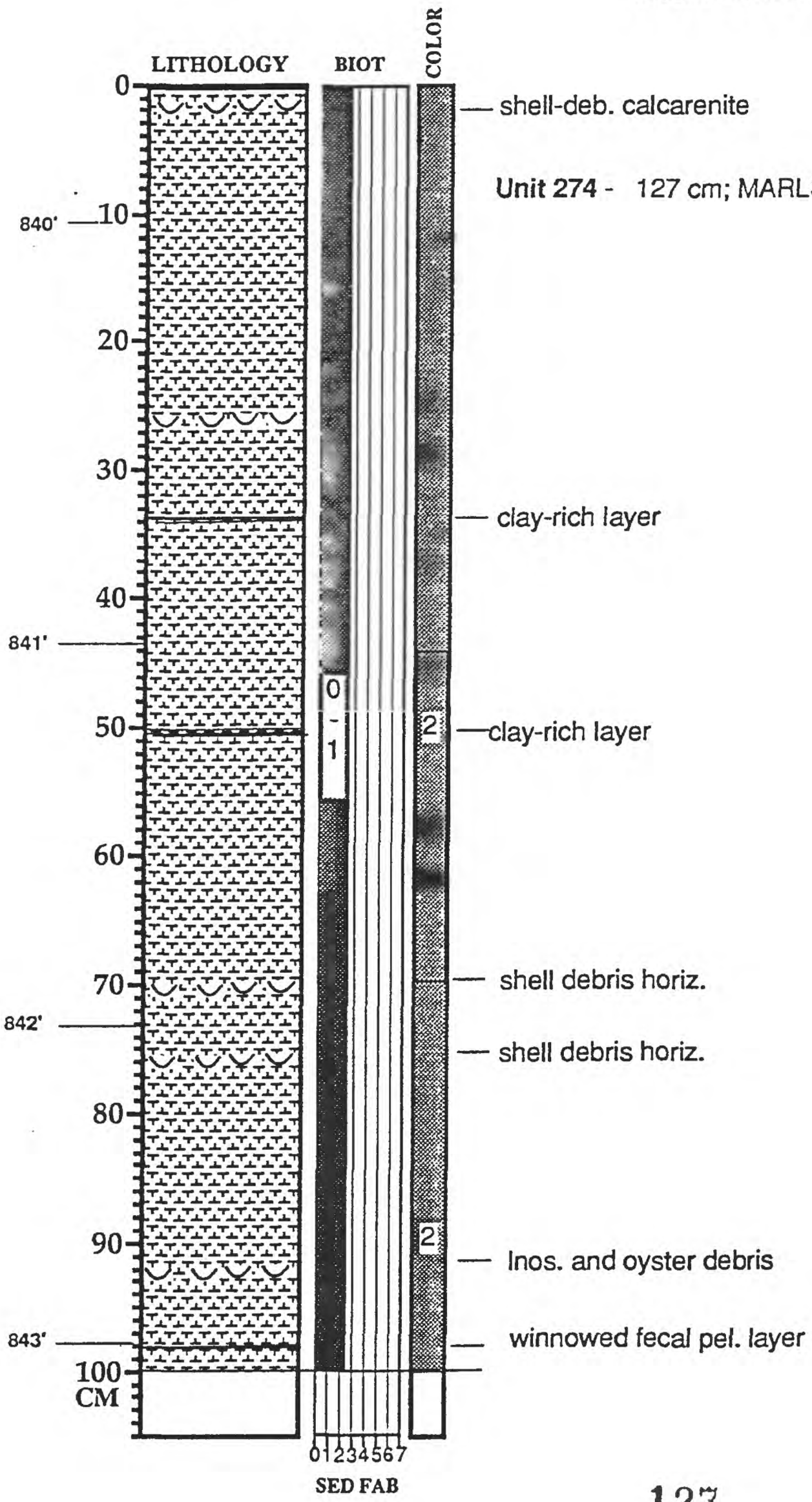

Unit 274 - 127 cm; MARLSTONE similar to Unit 272

MAA/WED/BBS - 6/92

CORE: AMOCO Rebecca K
Bounds #1

BOX # 31c
BOX FOOTAGE 836-846

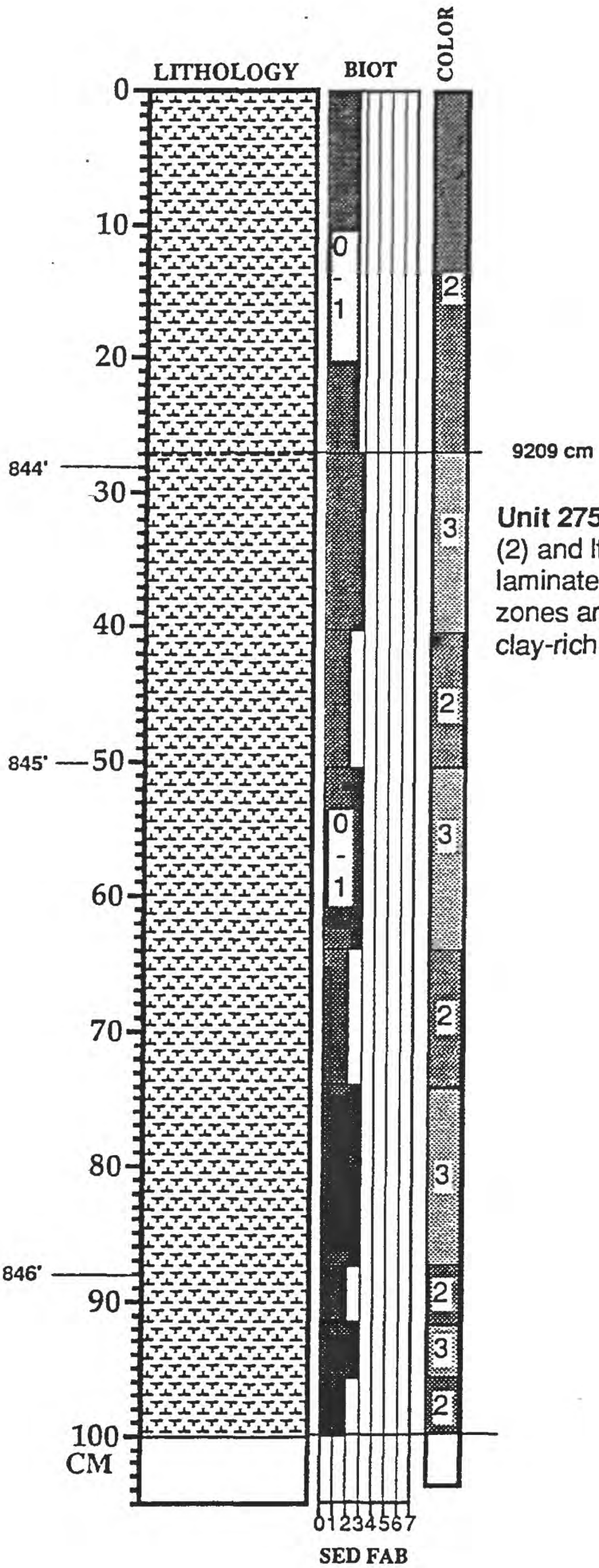

Unit 275 - 163.5 cm; MARLSTONE w/ color cycles of ol. gry (2) and lt. ol. gry. (3); lt. colored zones are more poorly laminated (3), and richer in lg. plank. forams.; darker colored zones are better lam. (mod. lam., 2) and contain darker, clay-rich sed.; minor shell debris

MAA/WED/BBS - 6/92

CORE: AMOCO Rebecca K
Bounds #1

BOX # 33a
BOX FOOTAGE 856 -866

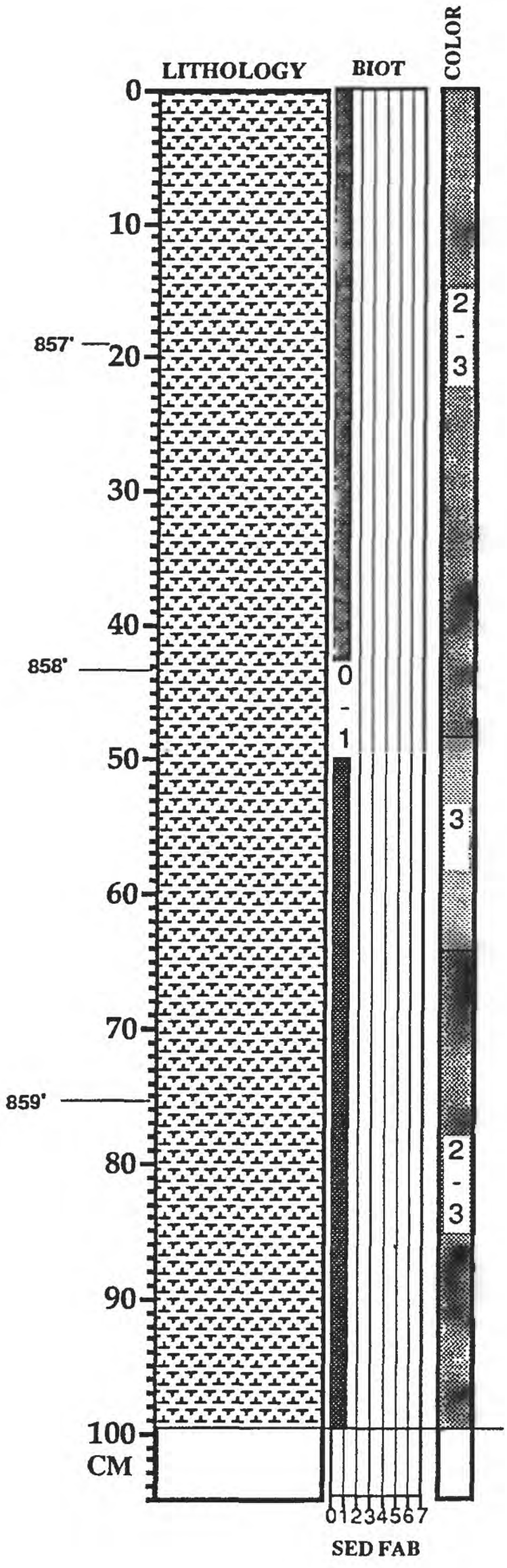

Unit 280 (cont.) - MARLSTONE as above; thin (ca. 1mm) calcarenite lenses @ 32, 33, 58, 74, 86, & 95 cm;sli. more abund. oyster debris; abund. plank. forams throughout

MAA/WED/BBS - 6/92

CORE: AMOCO Rebecca K
Bounds #1

BOX # 33b

BOX FOOTAGE 856 -866

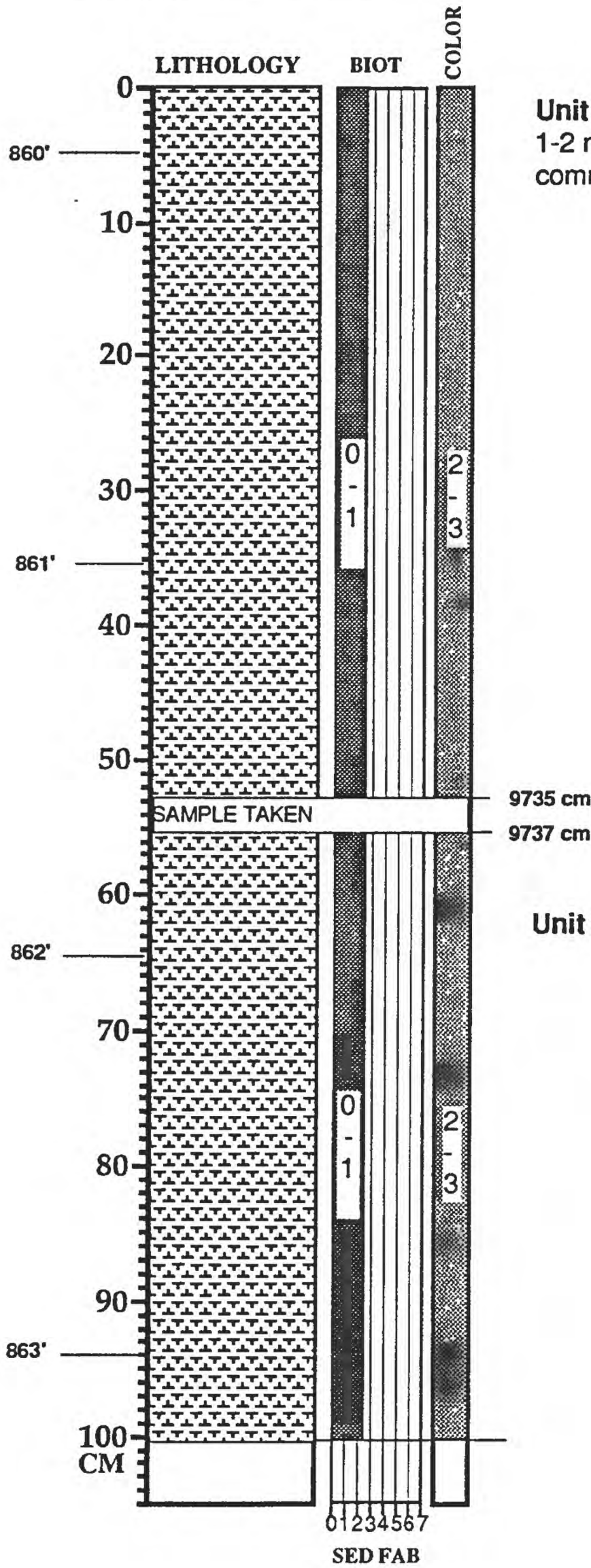

Unit 280 (cont.) - MARLSTONE as above; thin (ca. 1-2 mm) calcarenite lenses @ 5, 75, & 87 cm common to abund. plank. forams throughout

Unit 281 - 2.cm?; LITHOLOGY UNKNOWN

Unit 282 - 160.5 cm; MARLSTONE similar to Unit 280

MAA/WED/BBS - 6/92

CORE: AMOCO Rebecca K
Bounds #1

BOX # 33c
BOX FOOTAGE 856-866

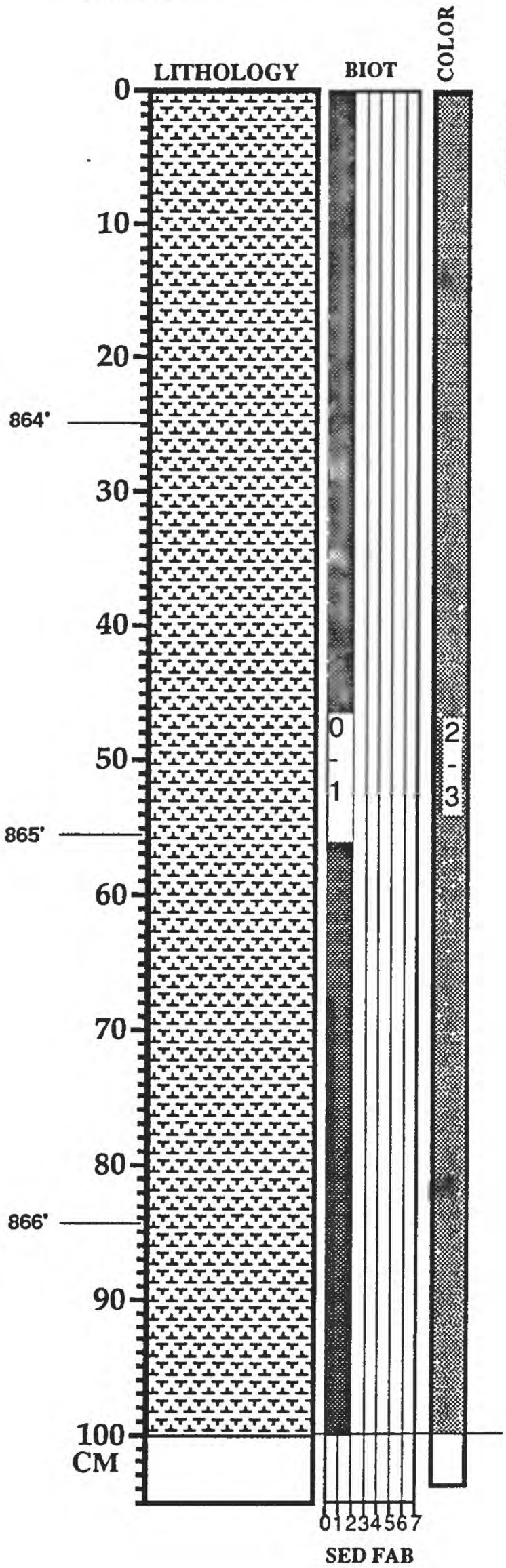

Unit 282 cont. - MARLSTONE as above; com. to abund. plank. forams.; minr shell material; thin (1 mm) calcarenite laminae @ 45, 61.5-64.5 cm

MAA/WED/BBS - 6/92

CORE: AMOCO Rebecca K
Bounds #1

BOX # 34a
BOX FOOTAGE 866 -876

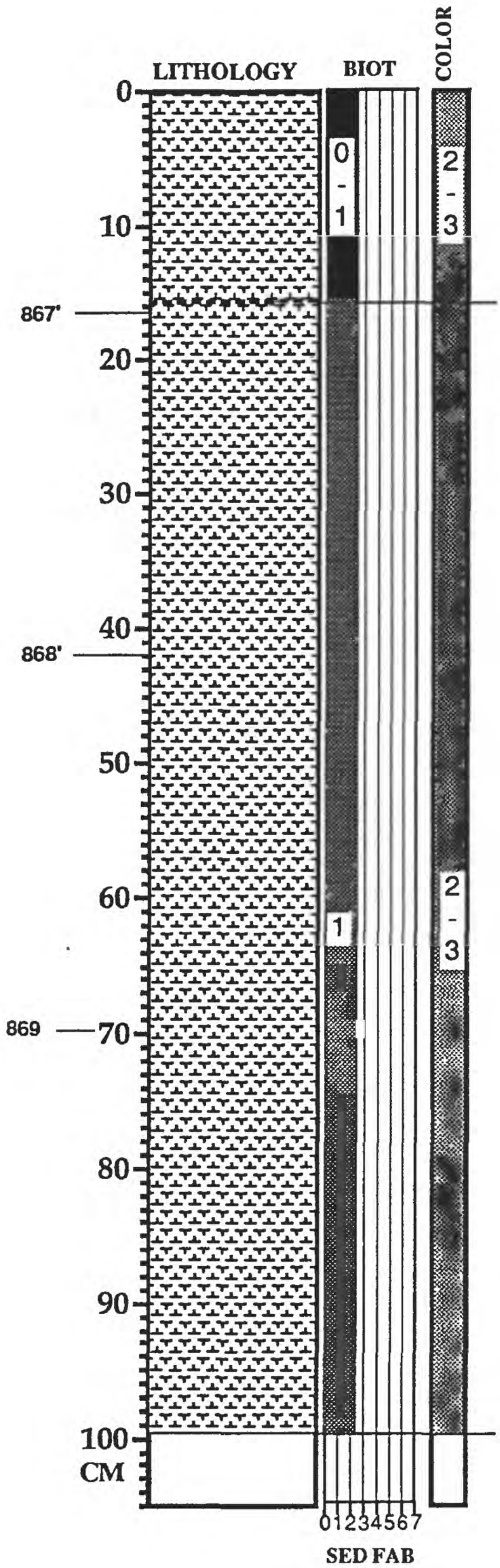

9897.5 cm

Unit 282 (cont.) - MARLSTONE as above w/ diminish. plank. forams; l. cont. grad. over 5 cm

Unit 283 - 241.5 cm; MARLSTONE; ol. gry (2/3); poorly to mod. lamin. (3/2); microbioturb. (1); minor shell debris; rare plank. forams; rare calcarenite laminae (usually concentrated fecal pellets rather than lno. debris)

MAA/WED/BBS - 6/92

CORE: AMOCO Rebecca K
Bounds #1

BOX # 34b

BOX FOOTAGE 866 -876

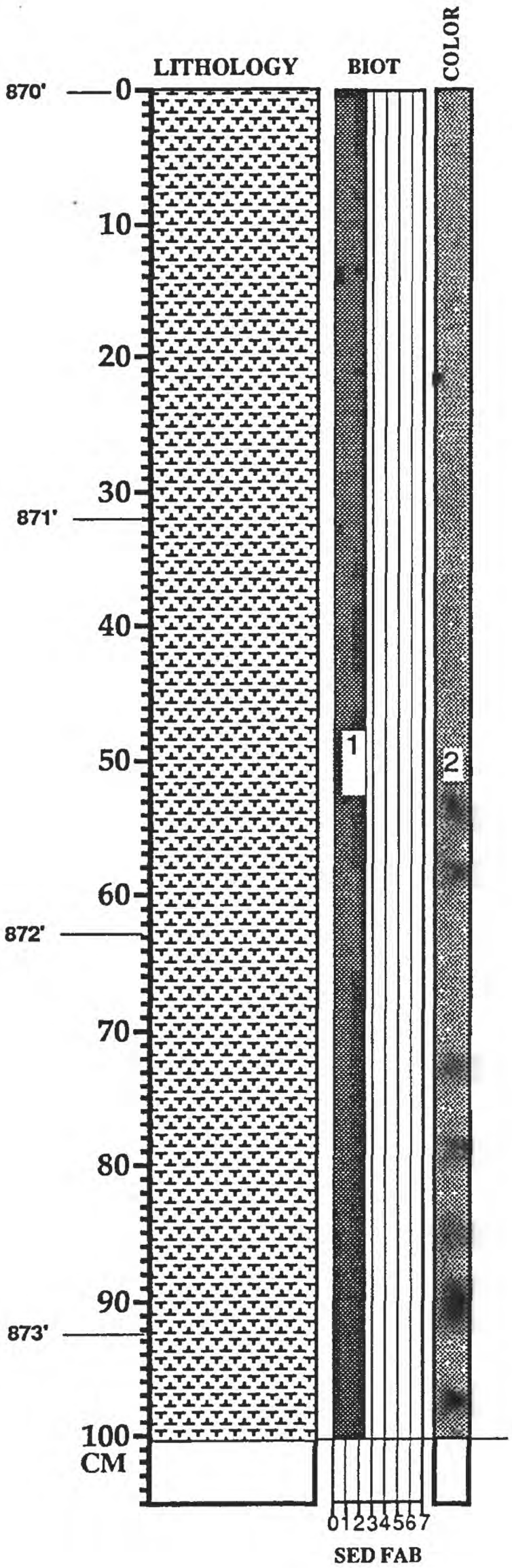

Unit 283 (cont.) - MARLSTONE as above

MAA/WED/BBS - 6/92

CORE: AMOCO Rebecca K
Bounds #1

BOX # 34c
BOX FOOTAGE 866-876

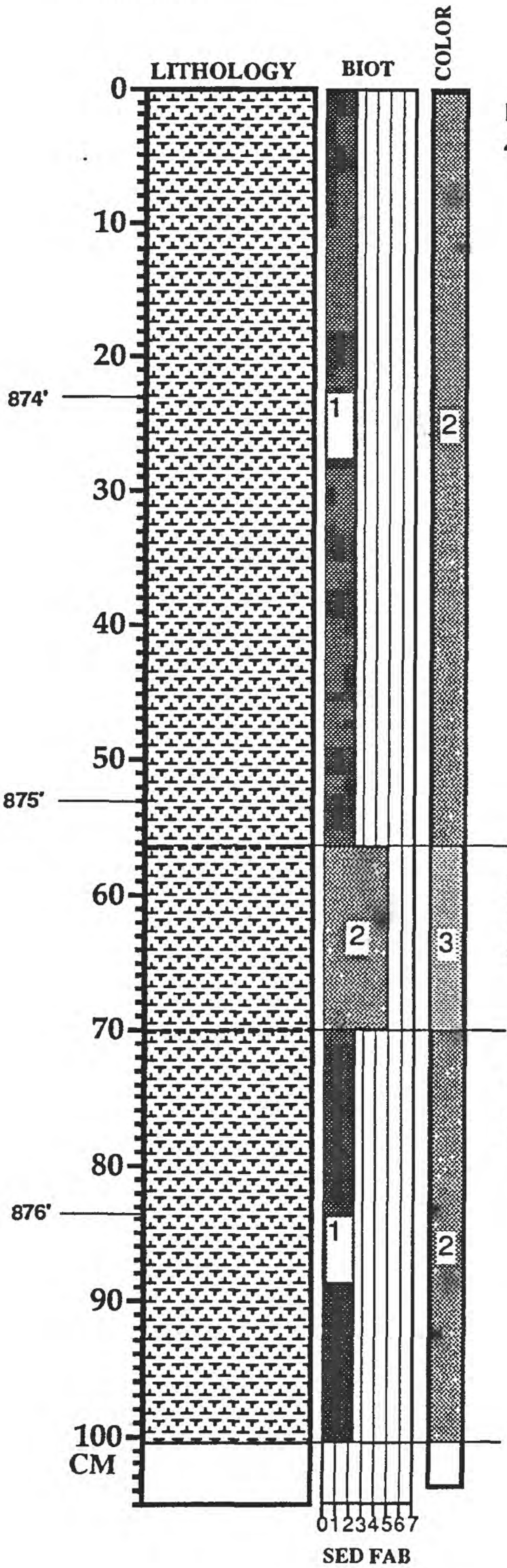

Unit 283 cont. - MARLSTONE as above; l. cont. grad. over 4 cm

Unit 284 - 13.5 cm; MARLSTONE; lt. ol. gry (3); poorly lamin. to sli. bioturb.(3-5); small burrows (2); l. cont. grad. over 4 cm

Unit 285 - 115.5 cm; MARLSTONE similar to Unit 283; ol. gry (2); poorly to mod. lamin. (3-2); microbiot. (1); calcarenite laminae at 94.5 cm

MAA/WED/BBS - 6/92

CORE: AMOCO Rebecca K
Bounds #1

BOX # 35a
BOX FOOTAGE 876-886

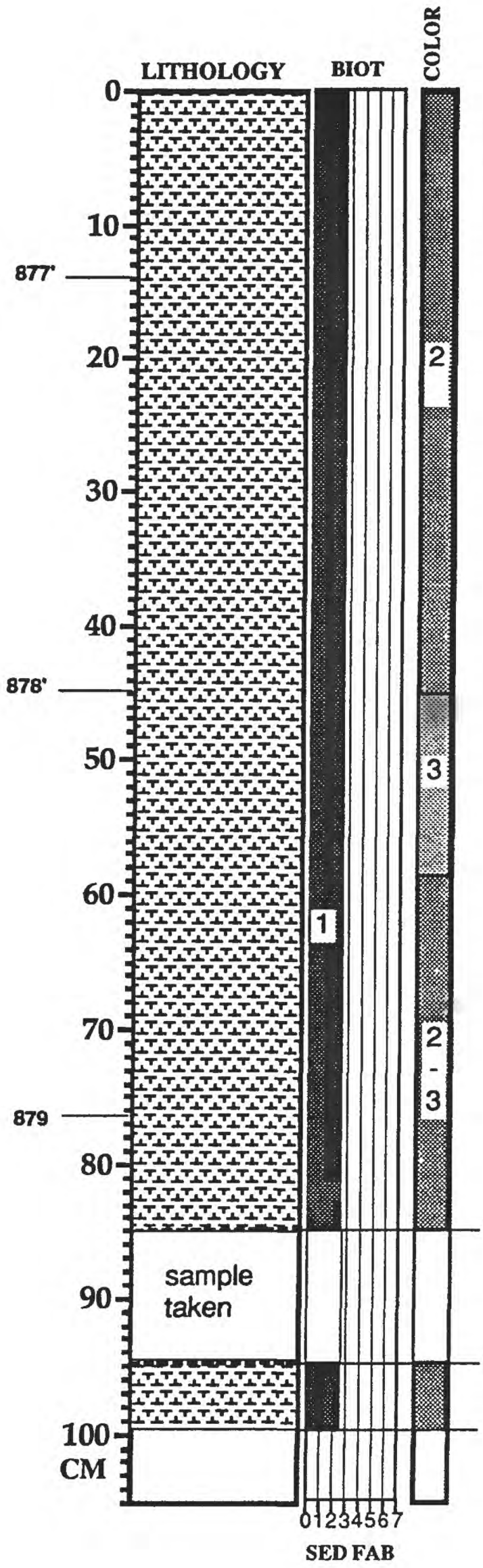

Unit 285 (cont.) - MARLSTONE as above; poorly to mod. lamin. (3-2); microbiot. (1); cyclic color variations between gray (2) and lt. ol. gray (3); thin calcarenites @ 12, 39, 70-73, and 97 cm; forams common throughout

Unit 286 - 10-cm sample taken, prob. MARLSTONE as above

Unit 287 - 73 cm; MARLSTONE as above

MAA/WED/BBS - 6/92

CORE: AMOCO Rebecca K
Bounds #1

BOX # 35b

BOX FOOTAGE 876-886

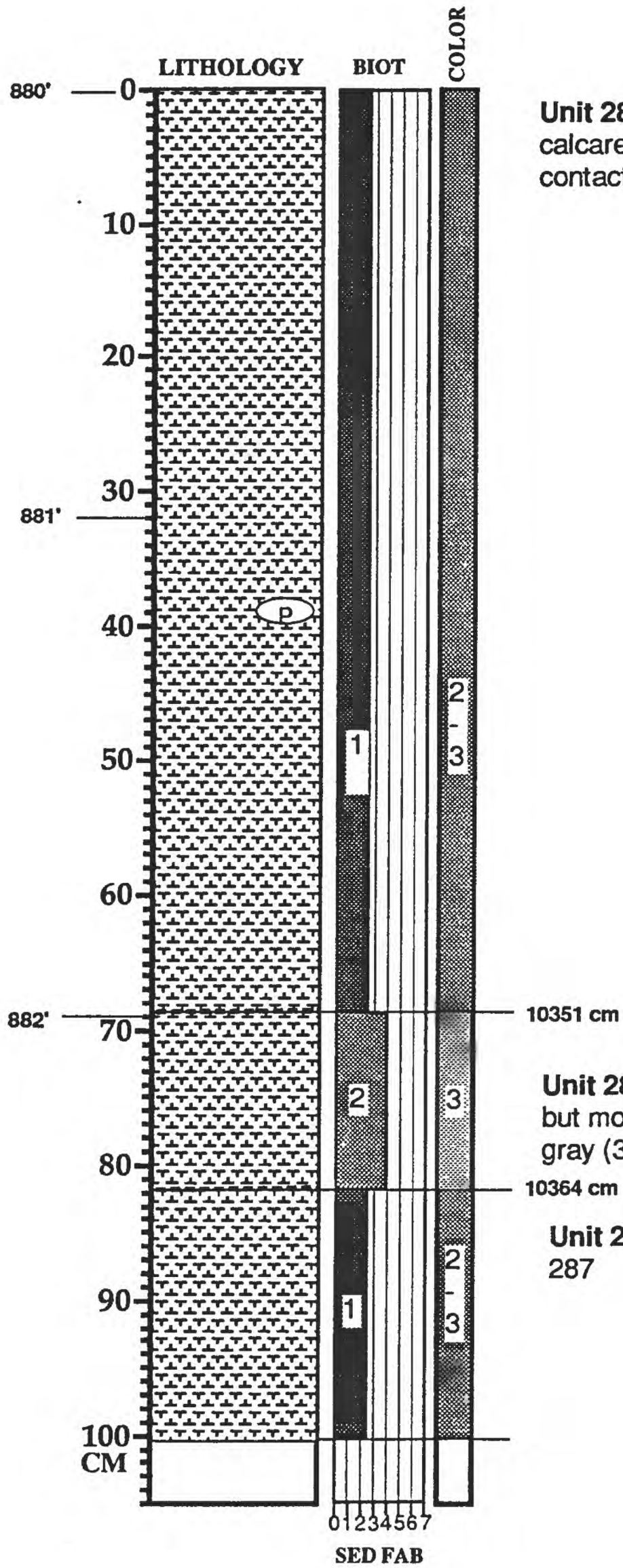

Unit 287 (cont.) - MARLSTONE as above; thin calcarenites @ 9, 31, 59, 75, 84, and 87 cm; lower contact gradational over 5 cm

Unit 288 - 13 cm; MARLSTONE similar to above but more bioturbated (5/3) w/ small burrows (2); ol. gray (3); lower contact grad. over 5 cm

Unit 289 - 67.5 cm; MARLSTONE similar to Unit 287

MAA/WED/BBS - 6/92

CORE: AMOCO Rebecca K
Bounds #1

BOX # 35c
BOX FOOTAGE 876-886

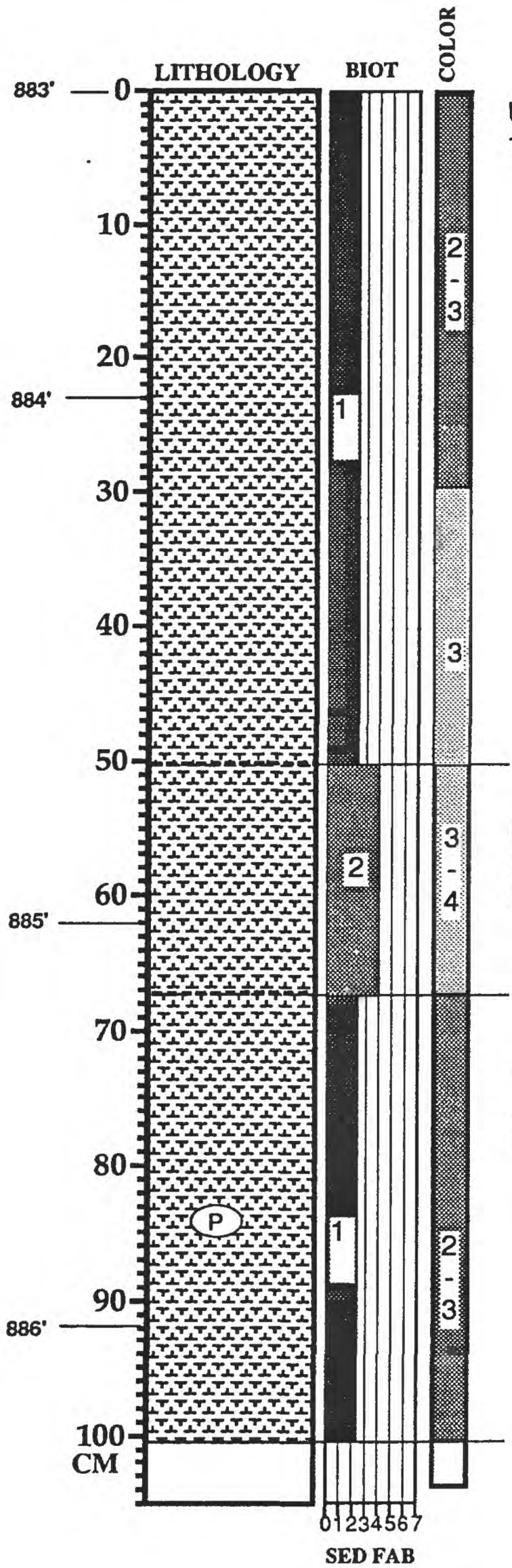

Unit 289 cont. - MARLSTONE as above; thin calcarenites @ 1 and 44.5 cm; l. cont. grad. over 5 cm

Unit 290 - 17 cm; MARLSTONE; lt. ol. gry. to yel. gry. (3/4); poorly lamin. to sli. bioturb.(3-5); small planol. burrows (2); l. cont. grad. over 5 cm

Unit 291 - 69.5 cm; MARLSTONE similar to Unit 289; ol. gry. to lt. ol. gry (2/3); poorly to mod. lamin. (3-2); microbiot. (1); lno. w/ pyrite @ 83 cm

MAA/WED/BBS - 6/92

CORE: AMOCO Rebecca K
Bounds #1

BOX # 36a
BOX FOOTAGE 886-896

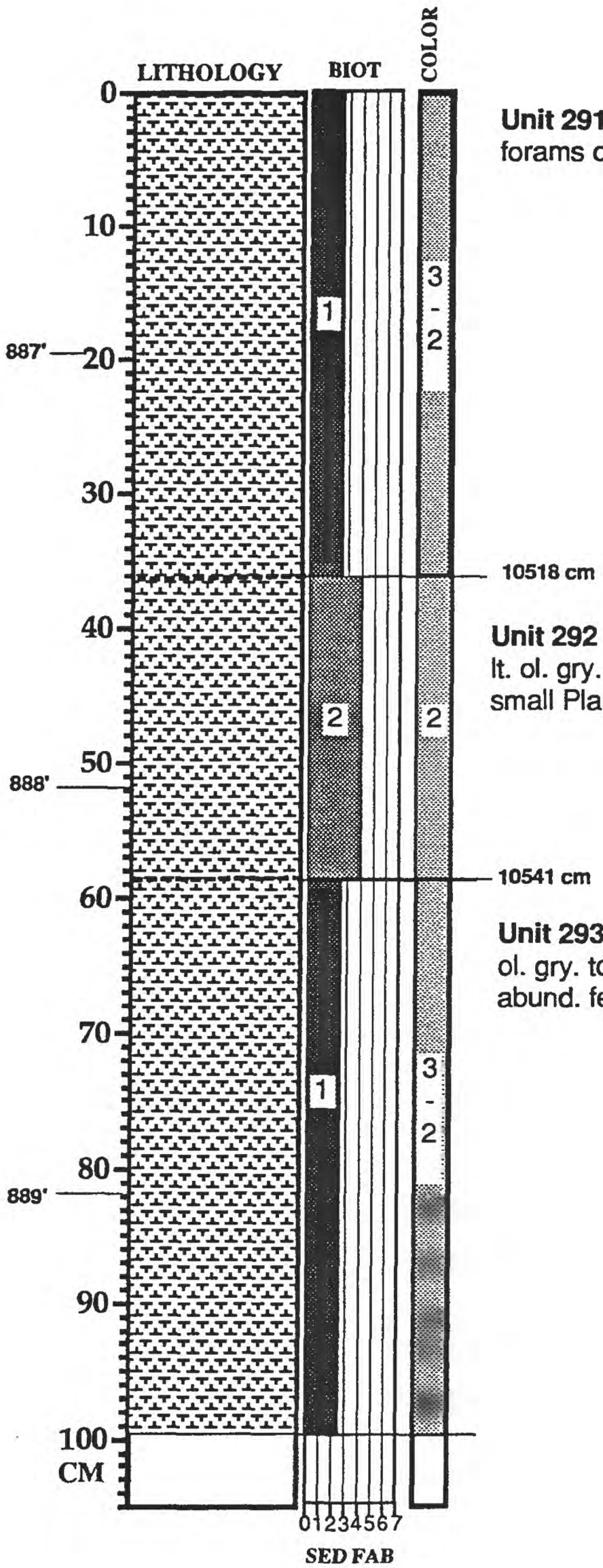

Unit 291 (cont.) - MARLSTONE as above; planktonic forams common throughout; l. contact grad. over 5 cm

Unit 292 - 23 cm; MARLSTONE similar to Unit 290 above; lt. ol. gry. to yel. gry. (3/4); homogeneous to sli. biot. (2) w/ small Planol. burrows (2); l. contact grad. over 5 cm

Unit 293 - 52 cm; MARLSTONE similar to Unit 291 above; ol. gry. to lt. ol. gry. (3/2); rare pyritized Ino. fragments; abund. fecal pel.; l. contact grad. over 5 cm

MAA/WED/BBS - 6/92

CORE: AMOCO Rebecca K
Bounds #1

BOX # 36b

BOX FOOTAGE 886-896

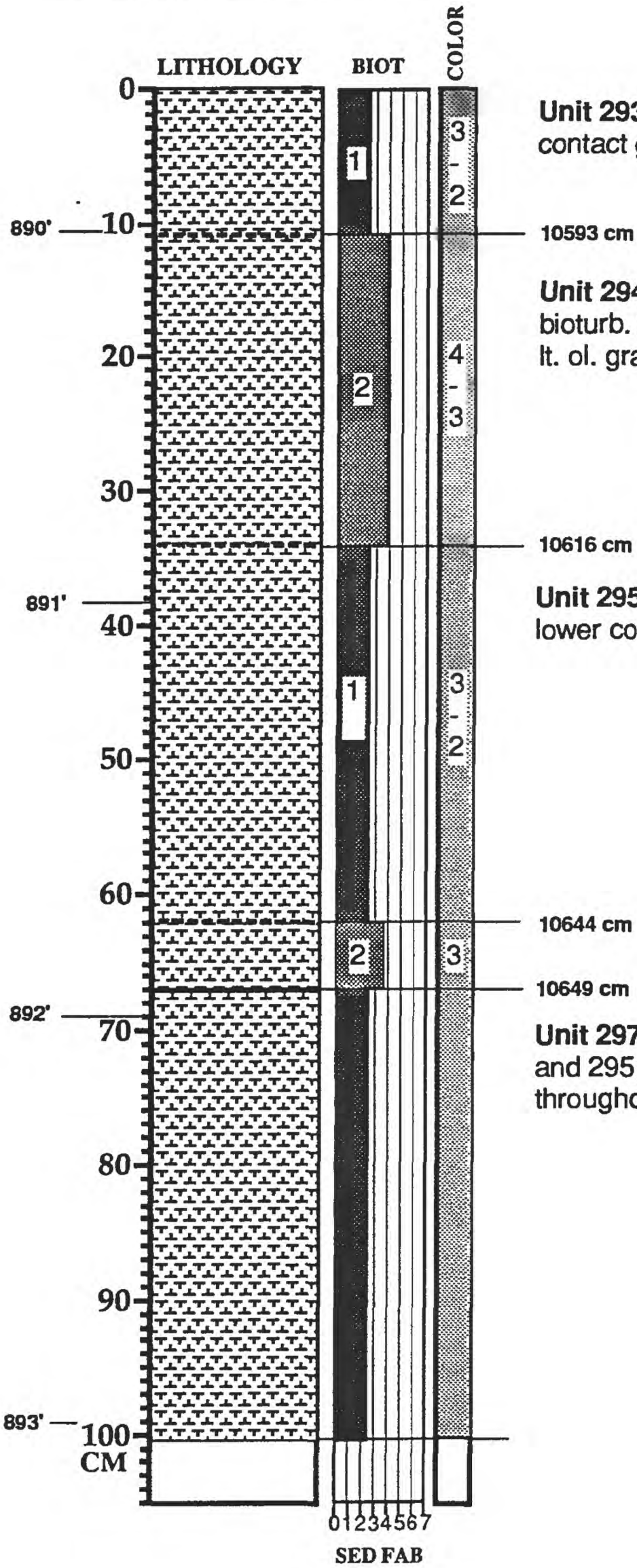

Unit 293 (cont.) - MARLSTONE as above; lower contact gradational over 5 cm

Unit 294 - 23 cm; MARLSTONE; poor. lam to sli. bioturb. (5/3) w/ small Plano. burrows (2); yel gray (4) to lt. ol. gray (3); lower contact grad. over 5 cm

Unit 295 - 28 cm; MARLSTONE; similar to unit 293; lower contact grad. over 3 cm

Unit 296 - 5 cm; MARLSTONE; poorly lam. to sli. burrowed; lt. ol. gry. (3); lower contact sharp

Unit 297 - 68 cm; MARLSTONE similar to Units 293 and 295; a few thin (<1mm) calcarenites scattered throughout

MAA/WED/BBS - 6/92

CORE: AMOCO Rebecca K
Bounds #1

BOX # 36c
BOX FOOTAGE 886-896

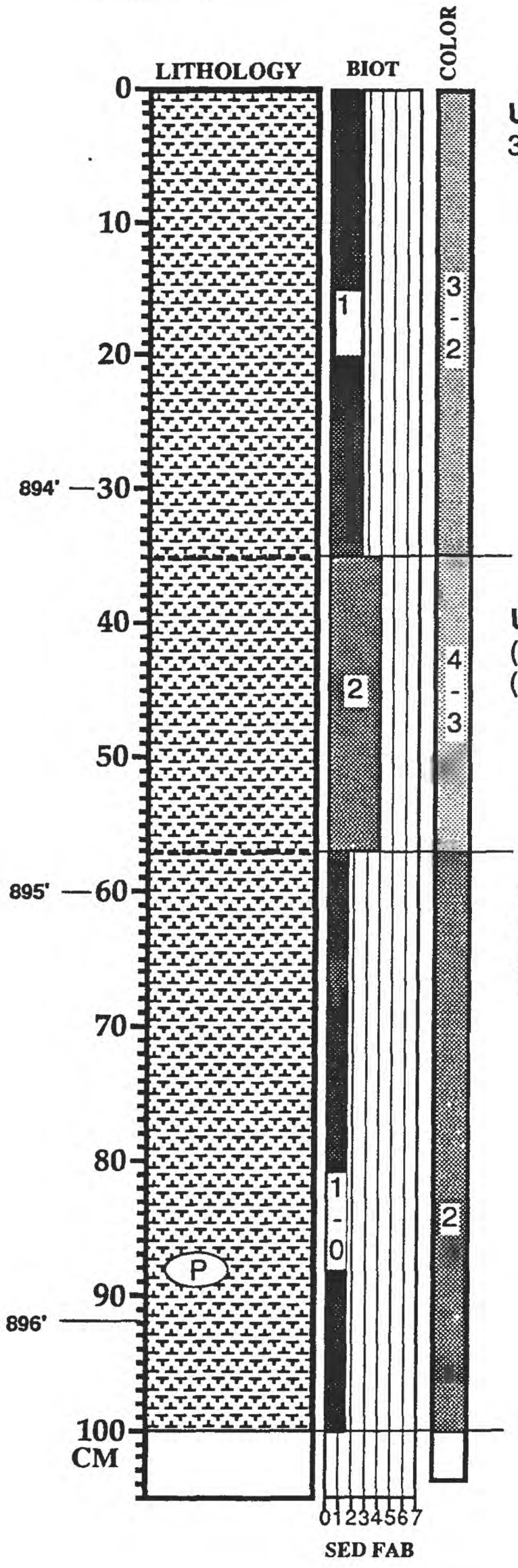

Unit 297 (cont.) - MARLSTONE as above; l. cont. grad. over 3 cm

Unit 298 - 22 cm; MARLSTONE; yel. gry. to lt. ol. gry. (4/3); poorly lamin. to sli. bioturb.(3-5); small planol. burrows (2); rare Ino. fragments; l. cont. grad. over 3 cm

Unit 299 - 80 cm; MARLSTONE similar to Unit 289; mod. to v. well lamin. (2/1); microbiot. to no ichnofauna (1/0); ol. gry. (2); common plank. forams; pyrite nod. assoc w/ Ino. fragment @ 88 cm

MAA/WED/BBS - 6/92

CORE: AMOCO Rebecca K
Bounds #1

BOX # 37a
BOX FOOTAGE 896 -906

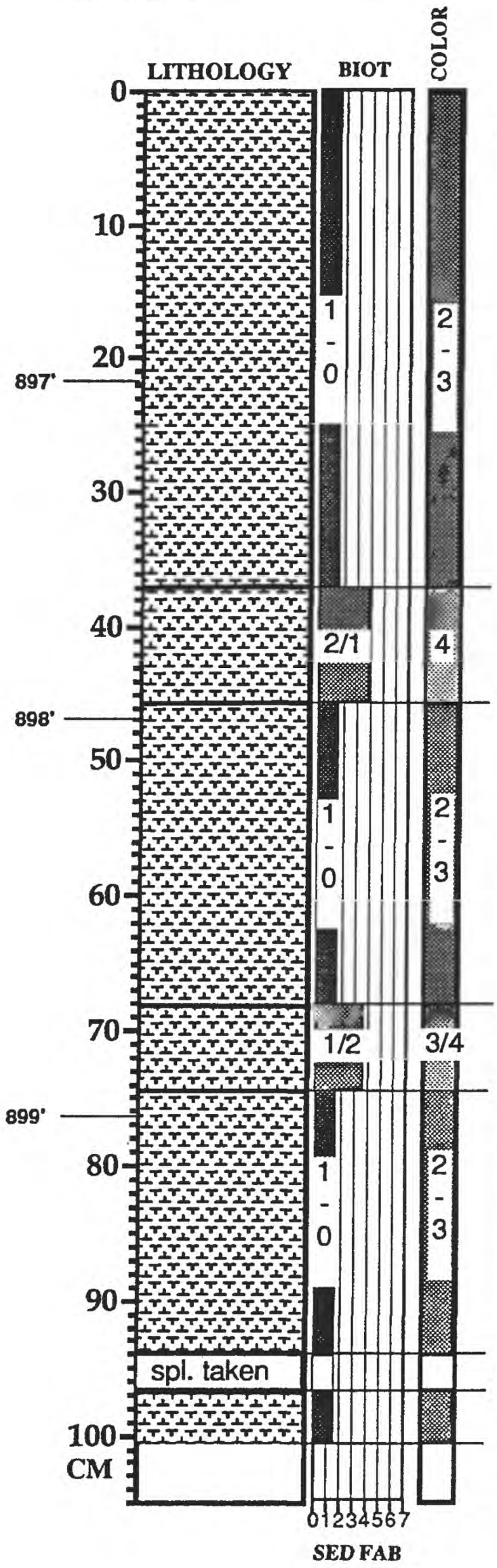

Unit 299 (cont.) - MARLSTONE as above; 1-2 mm calcarenite @ 20.5 cm; l. contact sharp

Unit 300 - 8.5 cm; MARLSTONE similar to Unit 298 above; yel. gry. (4); rich in fecal pel.; calcarenite laminae @ top and bottom, middle of unit is winnowed; few Ino. prisms and forams; l. contact sharp

Unit 301 - 22.5 cm; MARLSTONE similar to Unit 299 above; ol. gry. to lt. ol. gry. (2/3); abund. carcarenite laminae; l. contact sharp

Unit 302 - 7 cm; MARLSTONE ; lt. ol. gry. to yel. gry. (3/4); abund. carcarenite laminae and fecal pel.; l. contact sharp

Unit 303 - 19 cm; MARLSTONE similar to Units 299 and 301 above; ol. gry. to lt. ol. gry. (2/3); abund. carcarenite laminae

Unit 304 - 2.5 cm; MARLSTONE? (lithol. unknown, but probab. a continuation of Unit 303)

Unit 305 - 49 cm; MARLSTONE probab. a continuation of Unit 303 above

MAA/WED/BBS - 6/92

CORE: AMOCO Rebecca K
Bounds #1

BOX # 37b

BOX FOOTAGE 896-906

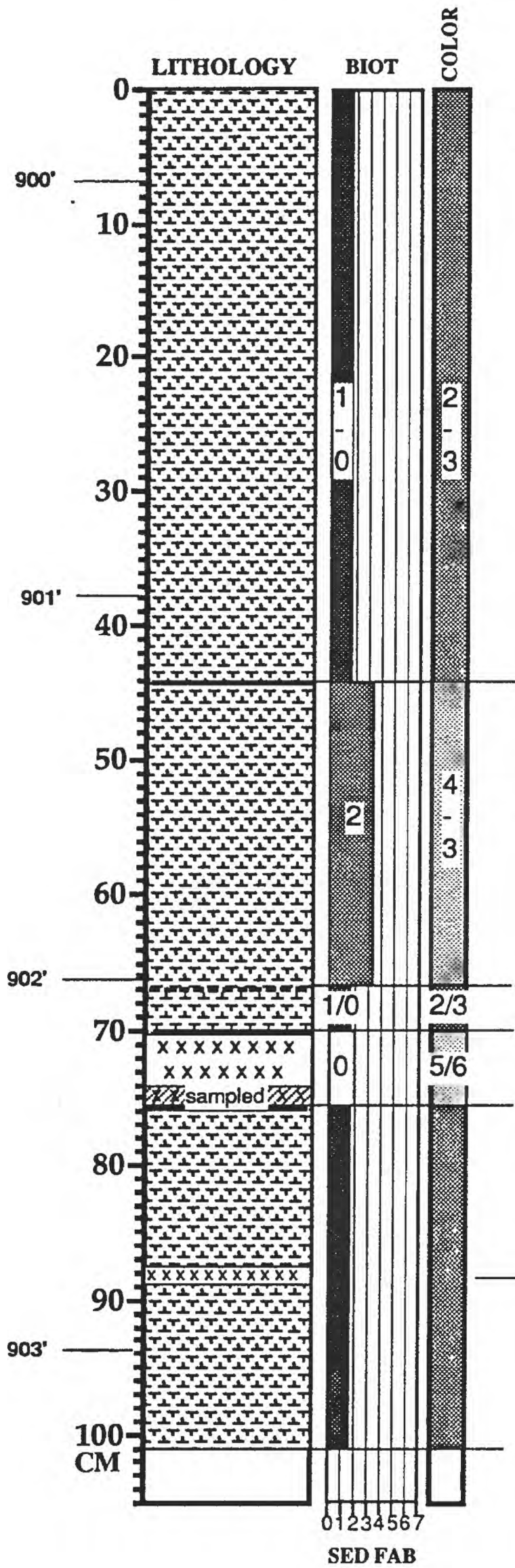

Unit 305 (cont.) - MARLSTONE as above; abund. pyrite; a few thin calcarenite laminae; l. contact sharp

Unit 306 - 23 cm; MARLSTONE; poor. lam to sli. bioturb. (4/3) w/ small Plano. burrows (2); yel gray (4) to lt. ol. gray (3); common calcarenite laminae; pyritic shell debris; abund. fecal pel.; l. contact grad. over 3 cm

Unit 307 - 2 cm; MARLSTONE similar to Unit 305; l. contact sharp

Unit 308 - 6 cm; BENTONITE; lt. gry. to white (5/6); l. 3 cm sampled; l. contact sharp

Unit 309 - 93 cm; MARLSTONE; similar to unit 305; ol. gry. to lt. ol. gry. (2/3

v. thin (1-mm stringer) BENTONITE

MAA/WED/BBS - 6/92

CORE: AMOCO Rebecca K
Bounds #1

BOX # 37c
BOX FOOTAGE 896-906

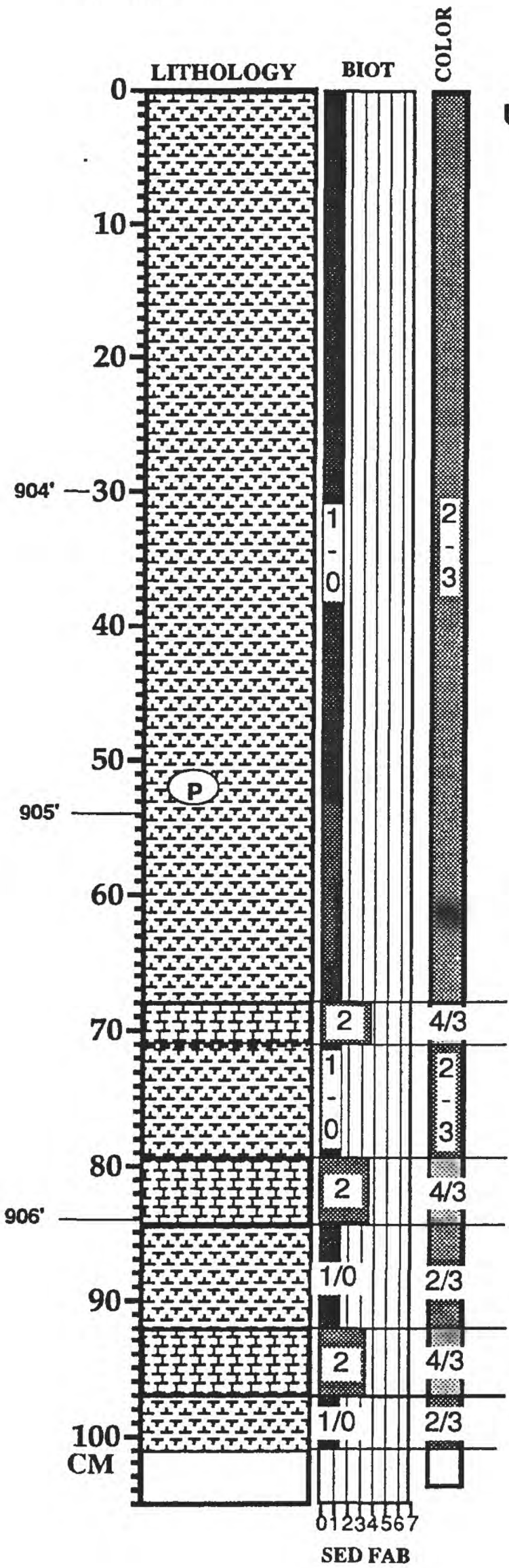

Unit 309 (cont). - MARLSTONE as above; l. cont. sharp

BASE, FAIRPORT CHALKY SH. MBR., CARLILE SH.

TOP, BRIDGE CREEK LS. MBR., GREENHORN FM.

11051.5 cm

Unit 310 - 3 cm; MARLY LIMESTONE; yel. gry. to lt. ol. gry. (4/3); poorly lamin. to sli. bioturb.(3/4); small planol. burrows (2); pyritic lno. fragments; l. cont. grad. over 1 cm

11054.5 cm

Unit 311 - 8.5 cm; MARLSTONE similar to Unit 309; l. contact sharp

11063 cm

Unit 312 - 5 cm; MARLY LIMESTONE; similar to Unit 310; l. cont. sharp

11068 cm

Unit 313 - 7.5 cm; MARLSTONE similar to Unit 309; l. contact sharp

11075.5 cm

Unit 314 - 5 cm; MARLY LIMESTONE; similar to Unit 310; l. cont. sharp

11080.5 cm

Unit 315 - 54.5 cm; MARLSTONE similar to Unit 309; l. contact sharp

MAA/WED/BBS - 6/92

CORE: AMOCO Rebecca K
Bounds #1

BOX # 38a
BOX FOOTAGE 906-916

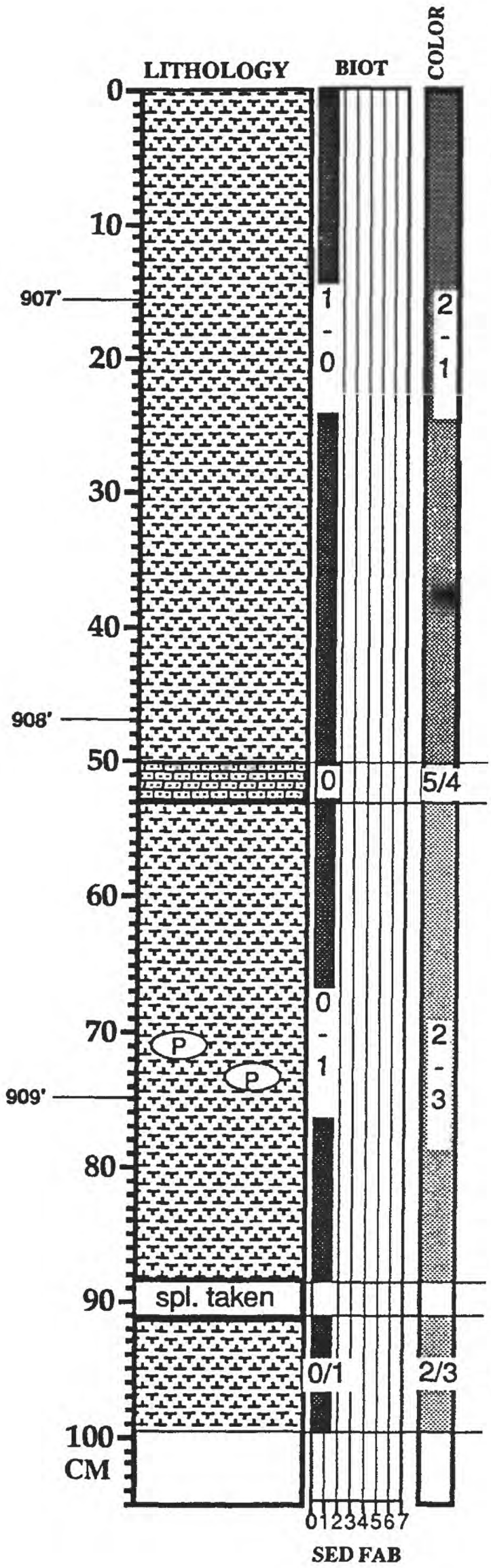

Unit 315 - (cont.) MARLSTONE as above but somewhat darker, ol. blk.to ol. gry. (2/1); mod. to well lamin. (1/2); no ichnotaxa (0/1); scattered foram tests; comon thin (<1 m) calcisiltite laminae; lno. fragments scattered throughout; l. contact sharp

11135 cm
11138.5 cm

Unit 316 - 3.5 cm; CALCARENITE; lt. gry. to yel. gry. (5/4); fragments consist of unrecog. calc. debris; faint lamin. (0/3); no ichnotaxa (0); l. contact sharp

Unit 317 - 34 cm; MARLSTONE similar to Unit 315 above; ol. gry. to lt. ol. gry. (2/3); no ichnotaxa (0/1); common 1-mm calcisiltite laminae; pyrite nods. @ 71-73 cm;

11172.5 cm
11175 cm

Unit 318 - 2.5 cm; MARLSTONE? (lithol. unknown but probab. same as above and below)

Unit 319 - 10 cm; MARLSTONE as above

MAA/WED/BBS - 6/92

CORE: AMOCO Rebecca K
Bounds #1

BOX # 38b

BOX FOOTAGE 906-916

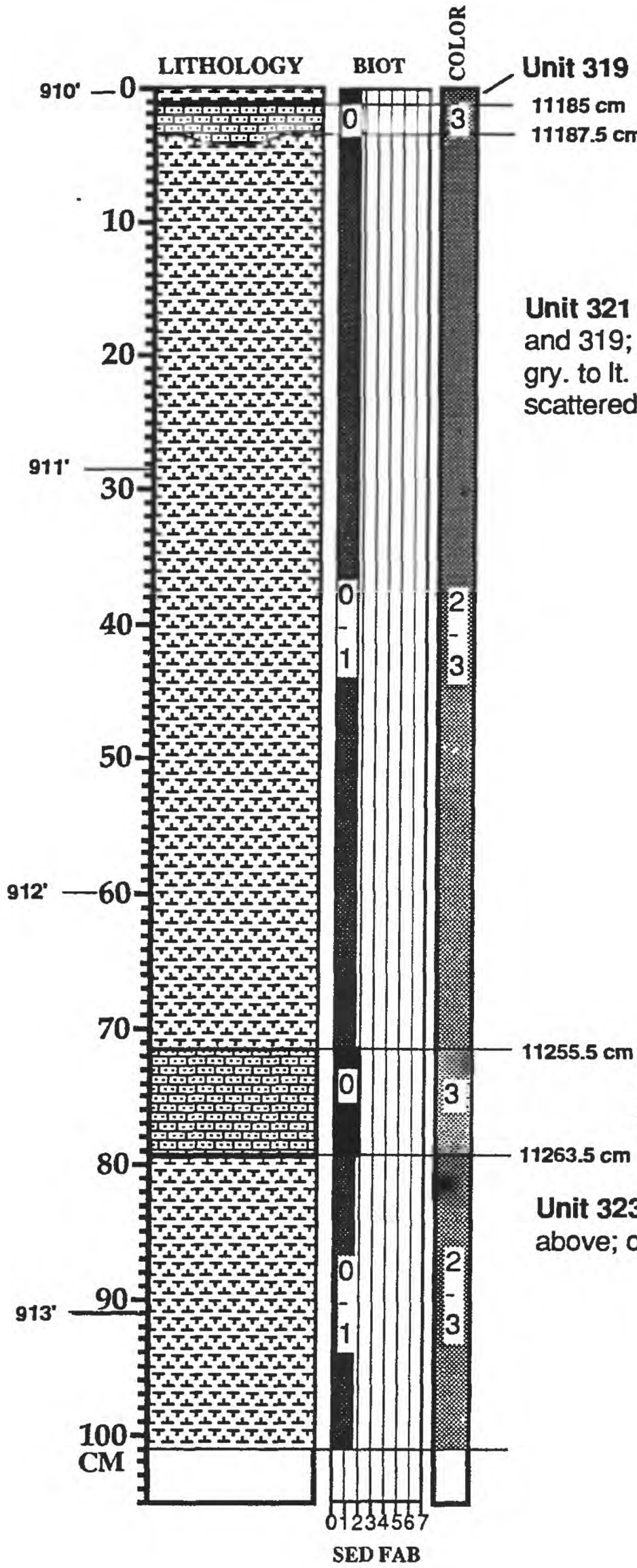

Unit 319 (cont.) - MARLSTONE as above; l. contact sharp

Unit 320 - 2.5 cm; CALCARENITE; homogeneous to faintly and irregularly laminated (0/3); no ichnofauna (0); sli. burrow mottling @ bottom; lt. ol. gry. (3); l. contact undulating and grad. over 1 cm

Unit 321 - 68 cm; MARLSTONE; similar to units 317 and 319; mod. to well lam. (2/1); no ichnotaxa (0/1); ol. gry. to lt. ol. gry. (2/3); a few pyrite blebs and lenses; rare scattered Ino. fragments; l. contact sharp

Unit 322 - 8 cm; CALCARENITE; simiar to Unit 320 above; l. contact sharp

Unit 323 - 105.5 cm; MARLSTONE; similar to unit 321 above; ol. gry. to lt. ol. gry. (2/3)

MAA/WED/BBS - 6/92

CORE: AMOCO Rebecca K
Bounds #1

BOX # 38c
BOX FOOTAGE 906-916

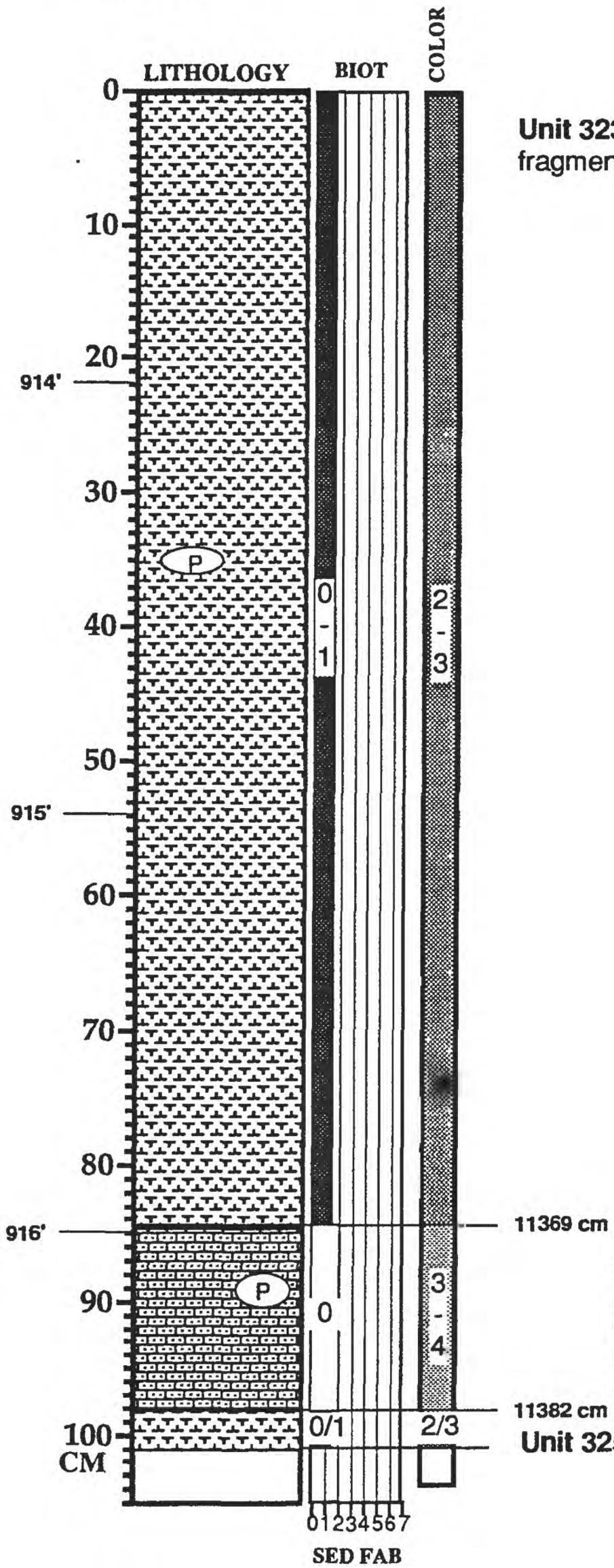

Unit 323 (cont.) - MARLSTONE as above; pyritized Ino. fragment @ 35 cm; l. contact grad. over 2 cm

Unit 324 - 13 cm; CALCARENITE; fine to med. grained; homogeneous (0), w/ some faint lamin.; composed mostly of unrecognizable calc. fragments; no ichnotaxa (0); yel. gry. to lt. ol. gry. (3/4); some Ino. prisms, fecal pel.,and forams; pyrite nodule at 88-90 cm; l. cont. grad. over 1-2 cm

Unit 325 (cont.) - 115 cm; MARLSTONE as unit 323 above

MAA/WED/BBS - 6/92

CORE: AMOCO Rebecca K
Bounds #1

BOX # 39a
BOX FOOTAGE 916-926

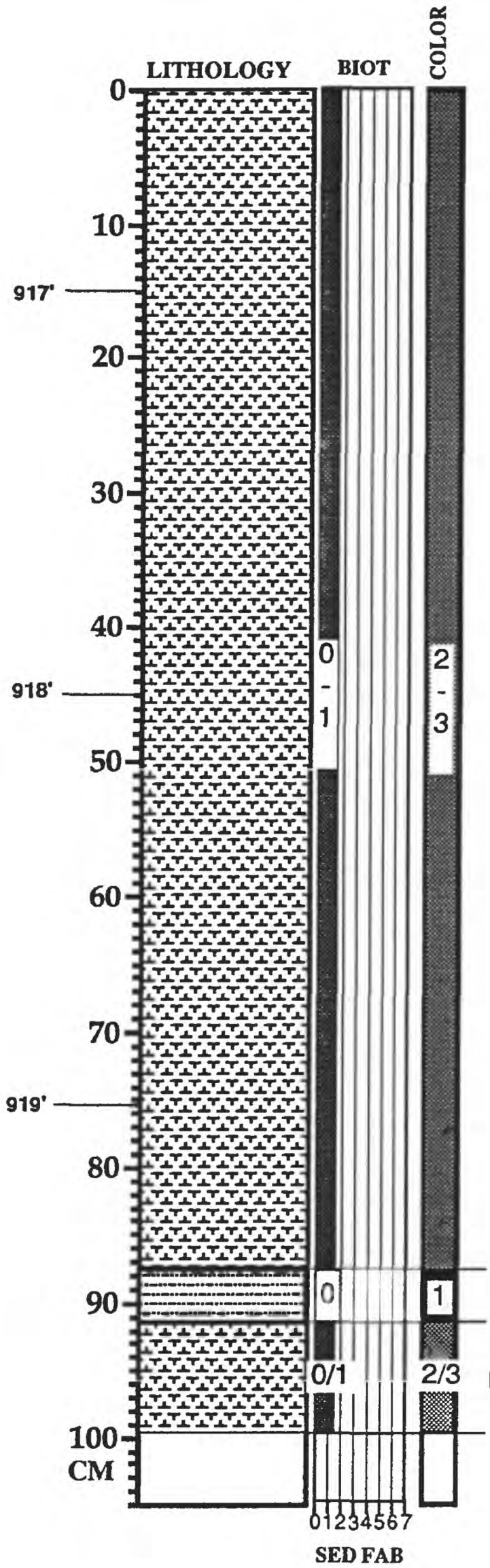

Unit 325 (cont.) - MARLSTONE as above but somewhat darker, ol. blk.to ol. gry. (2/1); no ichnotaxa (0/1); scattered foram tests; comon thin (<1 m) calcisiltite laminae; lno. fragments scattered throughout

Zone of ol.black MUD w/ calcisiltite stringer at base and rare calcisiltite lenses filled with forams; generally poor in forams and fecal pel.

Unit 325 (cont.) - MARLSTONE as above

MAA/WED/BBS - 6/92

CORE: AMOCO Rebecca K
Bounds #1

BOX # 39b
BOX FOOTAGE 916-926

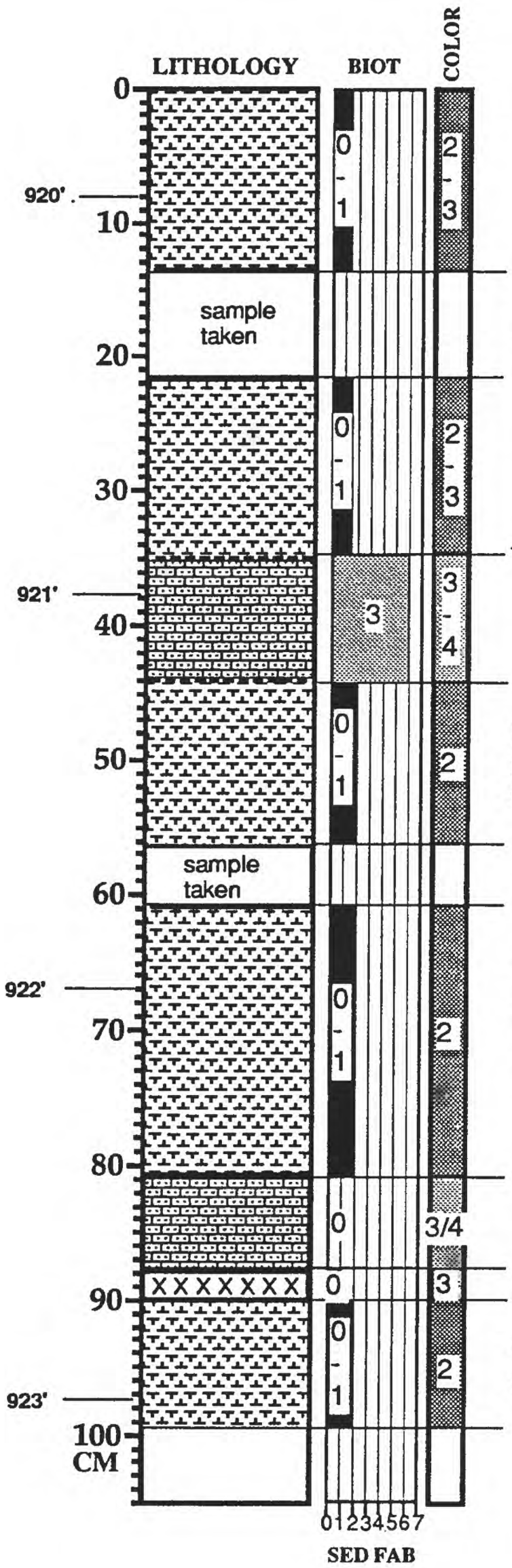

Unit 325 (cont.) - MARLSTONE as above

11497 cm

Unit 326 - 8 cm; lithol. unknown but prob. like overlying and underlying MARLSTONE

11505 cm

Unit 327 - 13.5 cm; MARLSTONE; similar to unit 325; mod. to well lam. (2/1); no ichnotaxa (0/1); ol. gry. to lt. ol. gry. (2/3); calcarenite content (number and thickness of laminae) increases down core; calc. laminae mostly comprised of forams; l. contact grad. over 2 cm

11518.5 cm

Unit 328 - 9 cm; CALCARENITE; mod. bioturb. (6); lt. ol. gry. to yel. gry. (2/3); common Ino. prisms; abund. fecal pel.; l. contact grad. over 2 cm

11527.5 cm

Unit 329 - 12.5 cm; MARLSTONE; similar to unit 327; mod. lam. (2); no ichnotaxa (0/1); ol. gry. (2); common calcisiltite lenses

11540 cm

Unit 330 - 4 cm; lithol. unknown but prob. like overlying and underlying MARLSTONE

11544 cm

Unit 331 - 20.5 cm; MARLSTONE; similar to unit 329; increasing calcisiltite lenses up to 2 mm thick; forams totally infilled w/ calcite; lensoid layers could be starved ripples; l. contact sharp

11564.5 cm

Unit 332 - 6.5 cm; CALCARENITE; homogen. (0); lt. ol..gry. to yel. gry. (2/3); l. contact sharp

11571 cm

11573 cm

Unit 333 - 2 cm; BENTONITE; lt. ol. gry. (3); l. contact sharp

Unit 334 - 21.5 cm; MARLSTONE; similar to unit 331 above

MAA/WED/BBS - 6/92

CORE: AMOCO Rebecca K
Bounds #1

BOX # 39c
BOX FOOTAGE 916-926

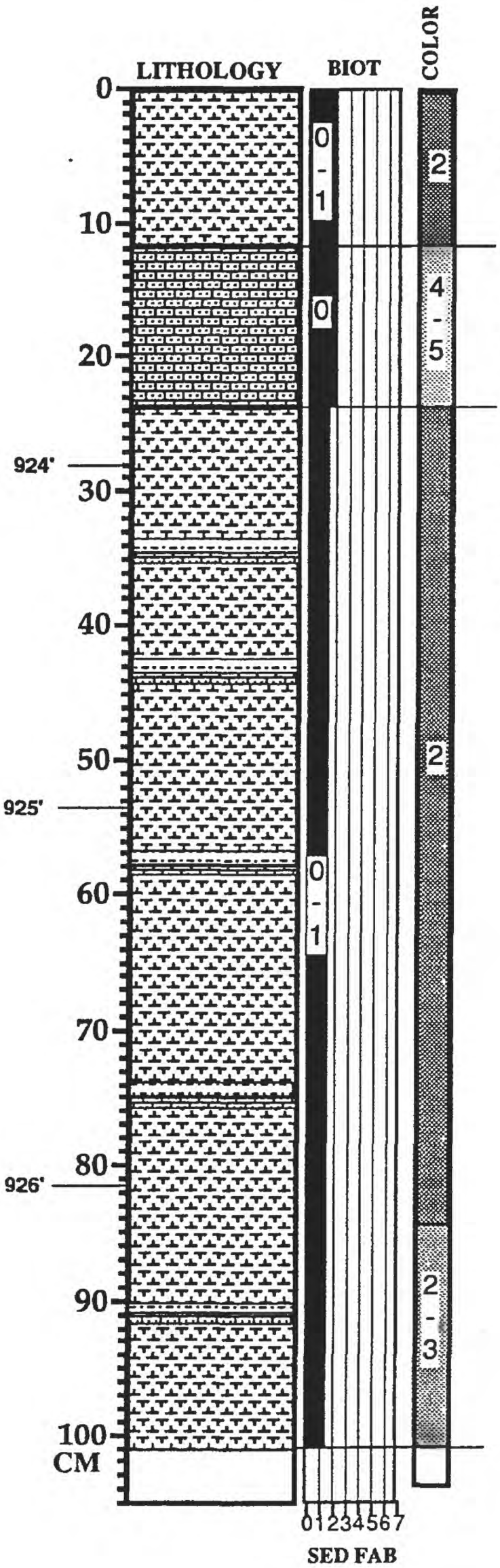

Unit 334 (cont.) - MARLSTONE as above; common Ino. frag.; l. contact sharp

Unit 335 - 11.5 cm; CALCARENITE; homogen. with some faint lamin. (0/3); no ichnotaxa (0); lt. gry. to v. lt. gry. (4/5); l. contact sharp

Unit 336 - 167.5 cm; MARLSTONE; mod. to well lamin. (1/2); ol. gry. (2) grading to lt. ol. gry. (3); more abund. foram calcarenite lenses and laminae 2-3 mm thick w/ some Ino. prisms; scattered ol. gry. to ol. blk. MUDSTONE layers 1 mm to 1 cm thick usually overlying a CALCARENITE lens 1-2 mm thick

MAA/WED/BBS - 6/92

CORE: AMOCO Rebecca K
Bounds #1

BOX #40a
BOX FOOTAGE 926-936

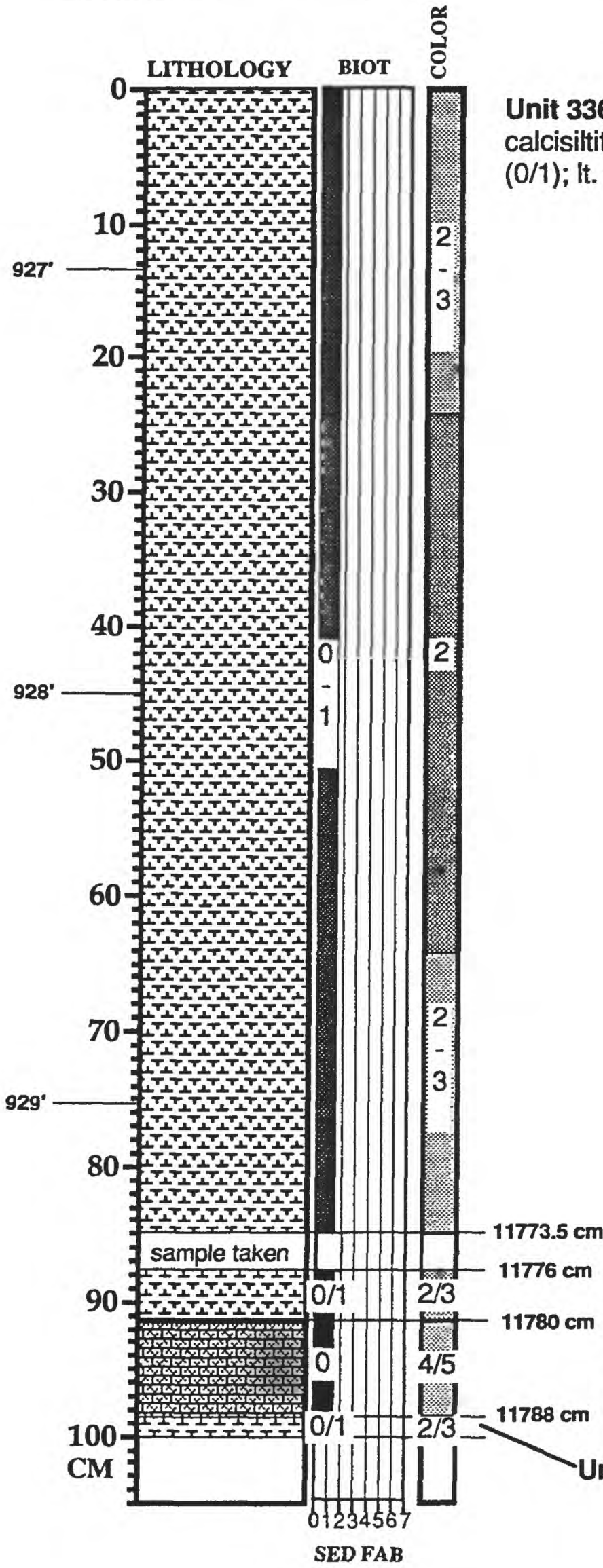

Unit 336 (cont.) - MARLSTONE as above but with fewer calcisiltite laminae; mod. to well lamin. (2/1); no ichnotaxa (0/1); lt. ol. gry. to ol. gry. (2/3)

Unit 337; 2.5 cm; lith. unknown but presumed to be MARLSTONE as above

Unit 338 - 4 cm; MARLSTONE; same as unit 336; l. contact sharp

Unit 339 - 8 cm; CALCARENITE; fine grained; homogen. with some faint lamin. (0/3); no ichnotaxa (0); lt. gry. to v. lt. gry. (4/5); l. contact sharp

Unit 340- 5 cm; MARLSTONE; same as unit 336

MAA/WED/BBS - 6/92

CORE: AMOCO Rebecca K
Bounds #1

BOX # 40b
BOX FOOTAGE 926-936

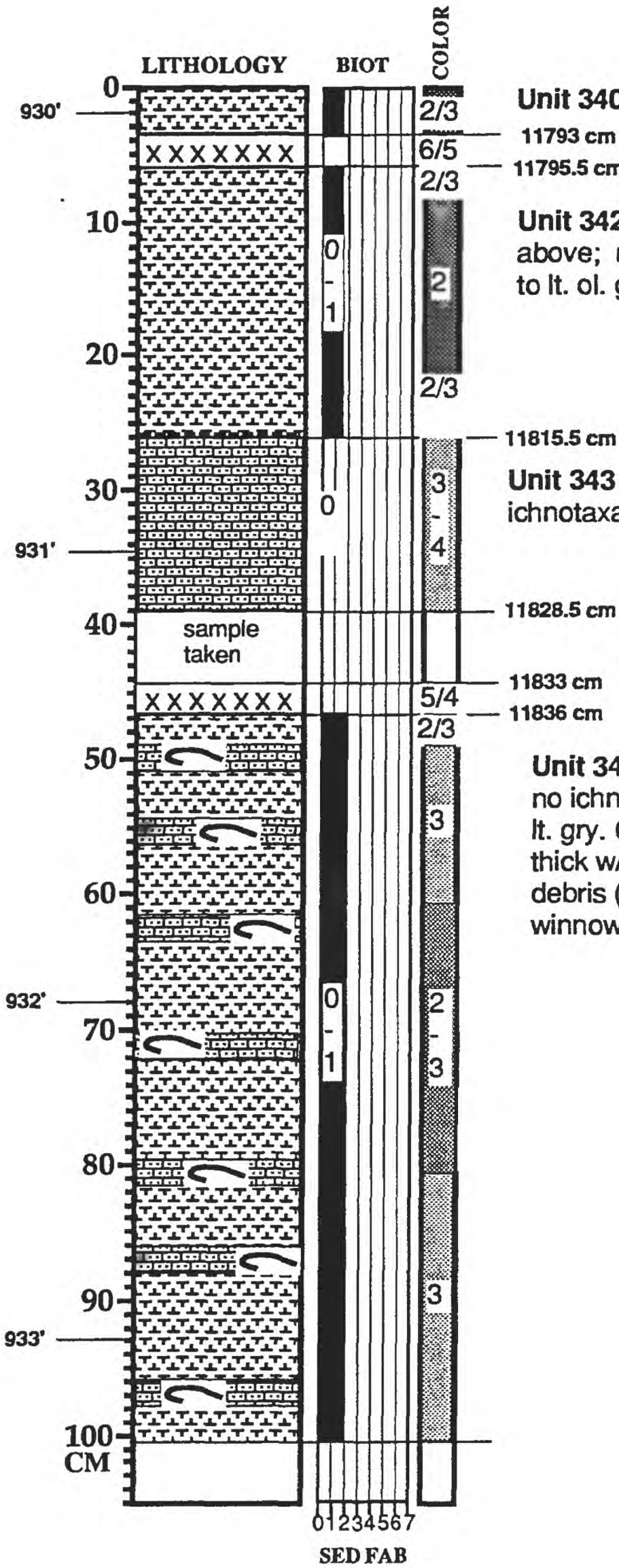

Unit 340 (cont.) - MARLSTONE as above; l. contact sharp

11793 cm

11795.5 cm

Unit 341 - 2.5 cm; BENTONITE ; white to v. lt. gry (6/5); l. contact sharp

Unit 342 - 20 cm; MARLSTONE; similar to unit 340 above; mod. to well lam. (2/1); no ichnotaxa (0/1); ol. gry. to lt. ol. gry. (2-3); l. contact grad. over 2 cm

11815.5 cm

Unit 343 - 13 cm; CALCARENITE; homogeneous; no ichnotaxa (0); lt. ol. gry. to yel. gry. (3/4)

11828.5 cm

Unit 344 - 4.5 cm; lith. unknown but presumed to be CALCARENITE as above

11833 cm

11836 cm

Unit 345 - 3 cm; BENTONITE ; lt. gry. to v. lt. gry (5/4); l. contact sharp

Unit 346 - 70 cm; MARLSTONE; mod. lamin. (2) w/ no ichnofauna (0/1); lt. ol. gry to ol. gry. 2-3; v. abund. lt. gry. CALCARENITE lenses and laminae up to 2 cm thick w/ sharp tops and bottoms; abund. Ino. frag. and debris (calcarenites are now mostly Ino. debris); rare winnowed foram. laminae

MAA/WED/BBS - 6/92

CORE: AMOCO Rebecca K
Bounds #1

BOX # 40c
BOX FOOTAGE 926-936

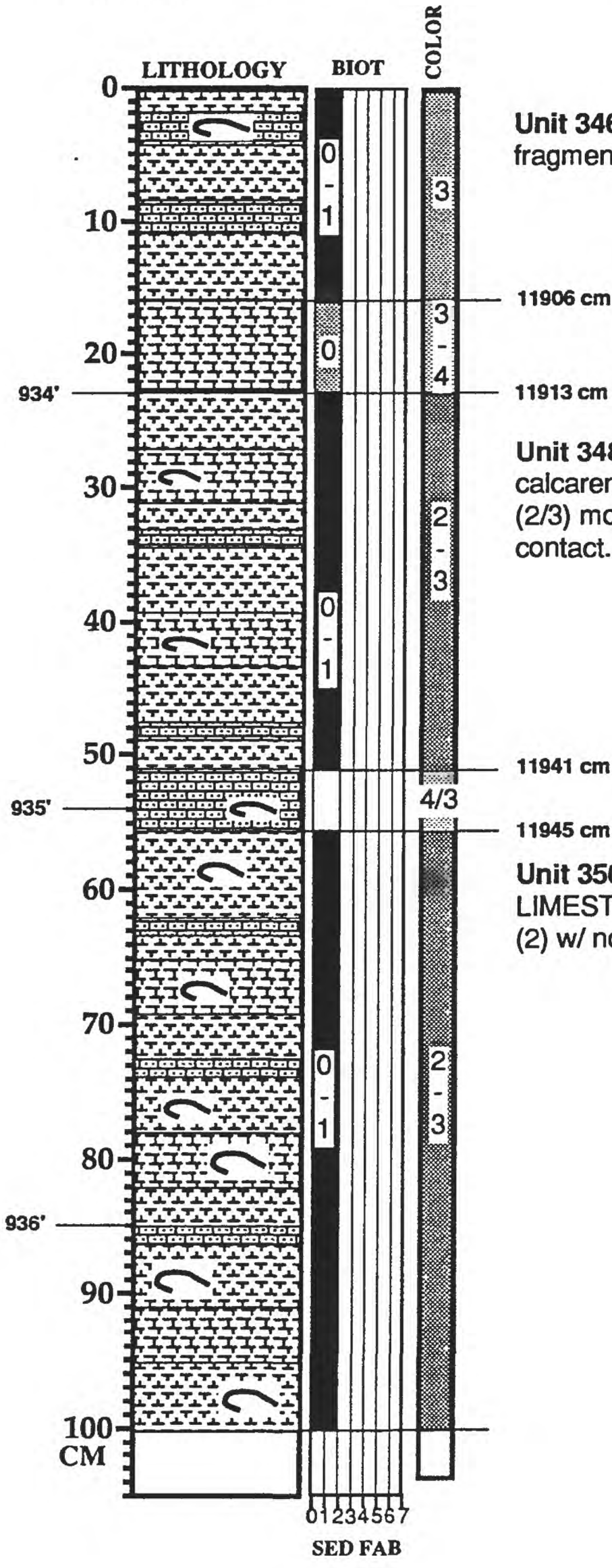

Unit 346 (cont.) - MARLSTONE as above; common Ino. fragments; l. contact sharp

Unit 347 - 7 cm; MARLY LIMESTONE, calcarenitic; some faint lamin. (3); no ichnotaxa (0); yel. gry. to lt.ol. gry. (3/4); l. contact sharp

Unit 348 - 28 cm; MARLSTONE to MARLY LIMESTONE, calcarenitic; mod. to well lamin. (1/2); ol. gry. to lt. ol. gry. (2/3) more abund. Ino. debris layers (CALCARENITES); l. contact. sharp

Unit 349 - 4 cm; CALCARENITE; no ichnotaxa (0); ol. gry. to lt.ol. gry. (3/4); l. contact sharp

Unit 350 - 60.5 cm; MARLSTONE to MARLY LIMESTONE, calcarenitic, similar to unit 348; mod. lamin. (2) w/ no ichnofauna (0/1); ol. gry. to lt. ol. gry. (2/3)

MAA/WED/BBS - 6/92

CORE: AMOCO Rebecca K
Bounds #1

BOX #41a

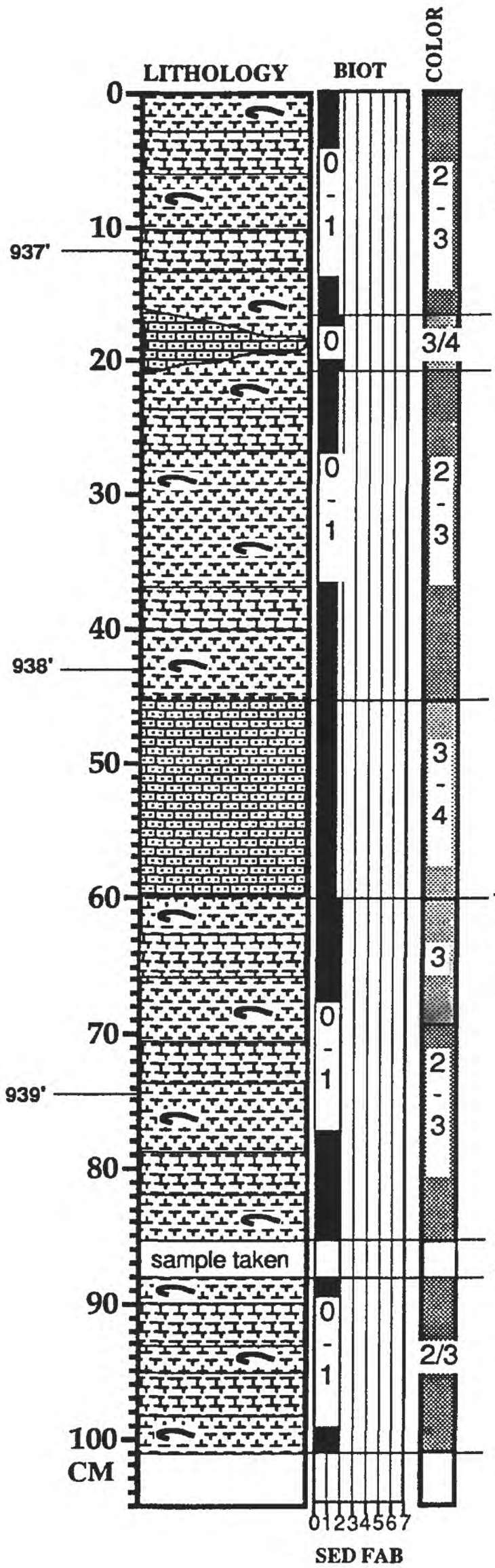

Unit 350 (cont.) - MARLSTONE to MARLY LIMESTONE as above; mod. lamin. (2); no ichnotaxa (0/1); lt. ol. gry. to ol. gry. (2/3); v. abund. plank. forams; abund. Ino. debris; l. contact grad. over 1 cm

Unit 351 - 5 cm; CALCARENITE; concretionary; homo. to well lamin (0-3); no ichnofauna (0); lt. ol. gry. to yel. gry. (3/4); l. contact grad. over 1 cm

Unit 352 - 23.5 cm; MARLSTONE to MARLY LIMESTONE similar to Unit 350; l. contact grad. over 1 cm

Unit 353 - 14.5 cm; CALCARENITE; fine to med. grained; coarser at base and top; homo. to well lamin (0-3); no ichnofauna (0); lt. ol. gry. to yel. gry. (3/4); l. contact grad. over 1 cm

Unit 354 - 26.5 cm; MARLSTONE to MARLY LIMESTONE similar to Units 350 and 352

Unit 355; 2 cm; lith. unknown but presumed to be MARLSTONE as above

Unit 356 - 93 cm; MARLSTONE to MARLY LIMESTONE similar to Units 350; 352; and 354

MAA/WED/BBS - 6/92

CORE: AMOCO Rebecca K
Bounds #1

BOX # 41b
BOX FOOTAGE 936-946

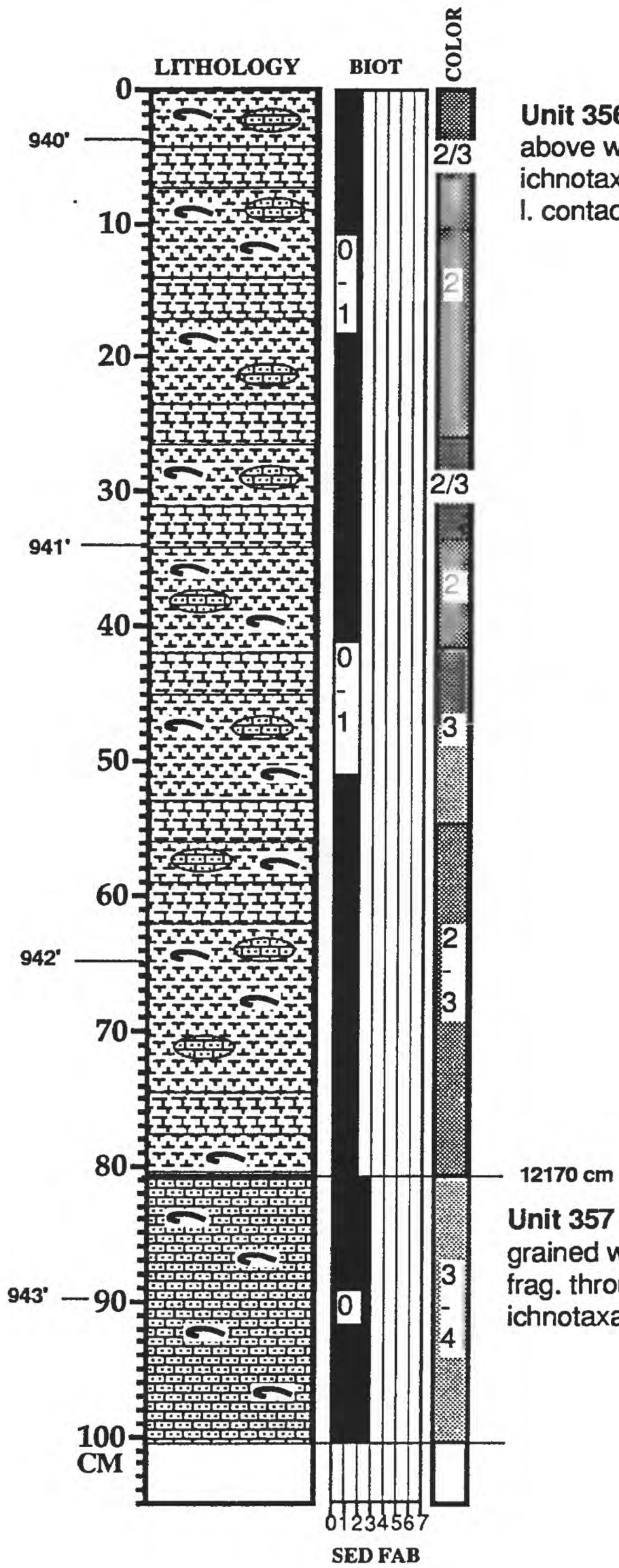

Unit 356 (cont.) - MARLSTONE to MARLY LIMESTONE as above w/ calcarenite lenses and laminae; mod. lamin. (2); no ichnotaxa (0/1); lt. ol. gry. to ol. gry. (2/3); abund. Ino. debris; l. contact sharp

Unit 357 - 34 cm; CALCARENITE; fine to med. grained w/ some zones of coarser material; abund. Ino. frag. throughout; abund. fecal pel.; poorly lam. (3); no ichnotaxa (0); lt. ol. gry. to yel. gry. (3/4)

MAA/WED/BBS - 6/92

CORE: AMOCO Rebecca K
Bounds #1

BOX # 41c
BOX FOOTAGE 936-946

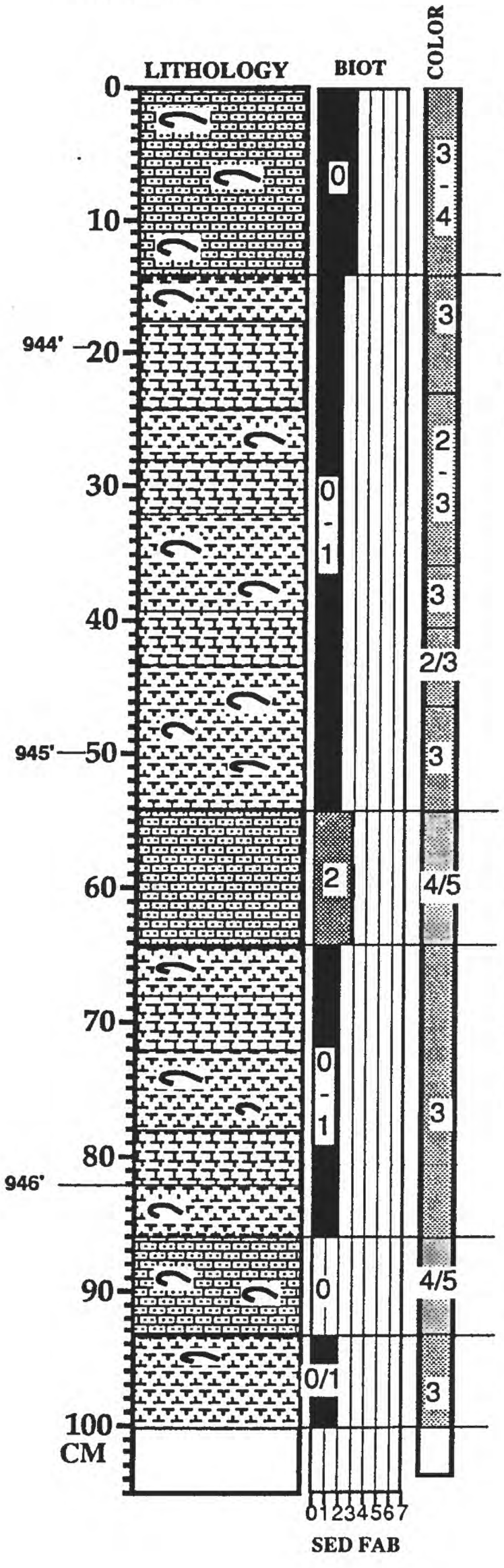

Unit 357 (cont.) - CALCARENITE; as above; no ichnotaxa (0); ol. gry. to lt.ol. gry. (3/4); l. contact grad. over 4 cm

Unit 358 - 40 cm; MARLSTONE to MARLY LIMESTONE, similar to above units; calcarenitic; mod. lamin. (2); no ichnotaxa (0/1); color zones of ol. gry. (2) to lt. ol. gry. (3); l. contact. sharp

Unit 359 - 10 cm; CALCARENITE; fine grained; small burrows (2); yel. gry. to v. lt. gry. (4/5); l. contact sharp

Unit 360 - 22 cm; MARLSTONE to MARLY LIMESTONE, similar to above units; calcarenitic; mod. lamin. (2); no ichnotaxa (0/1); abund. Ino. debris; predom. lt. ol. gry. (3); l. contact. grad. over 2 cm

Unit 361- 7.5 cm; CALCARENITE; fine grained; homogen. (0); yel. gry. to v. lt. gry. (4/5); l. contact grad. over 1 cm

Unit 362 - 30.5 cm; MARLSTONE; mod. lamin. (2); no ichnotaxa (0/1); abund. Ino. debris; predom. lt. ol. gry. (3)

MAA/WED/BBS - 6/92

CORE: AMOCO Rebecca K
Bounds #1

BOX #42a
BOX FOOTAGE 946 -956

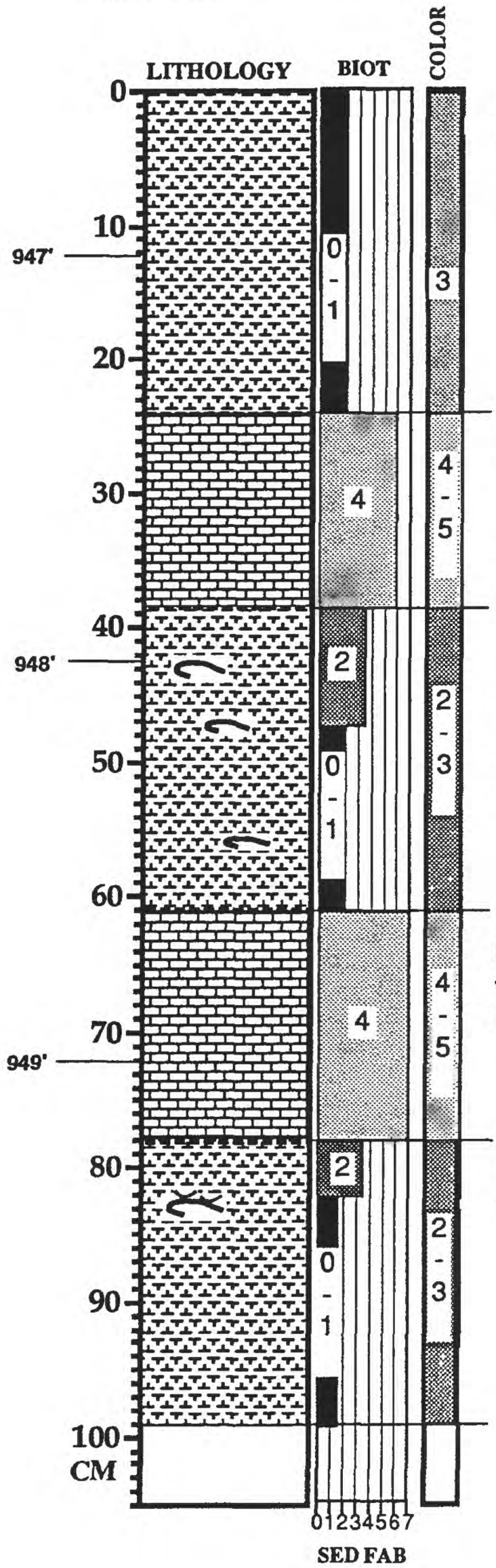

Unit 362 (cont.) - MARLSTONE as above; mod. lamin. (2); no ichnotaxa (0/1); lt. ol. gry. (3); l. contact grad. over 3 cm

Unit 363 - 14.5 cm; LIMESTONE to MARLY LIMESTONE; sli. calcarenitic w/ minor Ino. debris; mod. biot. (6) w/ large burrows (4); yel. gry. to v. lt. gry. (4/5); l. contact grad. over 2 cm

Unit 364 - 22 cm; MARLSTONE; v. calcarenitic w/ abund. Ino. frag. and plank. forams; mod. lamin. (2) except poorly lam. (3/4) at top; no ichnotaxa (0/1); except some small Plano. burrows at top; ol. gry. to lt. ol. gry. (2/3); l. contact grad. over 2-3 cm

Unit 365 - 17 cm; LIMESTONE to MARLY LIMESTONE; very biot. (7) w/ large burrows (4); yel. gry. to v. lt. gry. (4/5); l. contact grad. over 2-3 cm

Unit 366 - 23.5 cm; MARLSTONE, similar to Unit 364; shell island @ 82 cm.

MAA/WED/BBS - 6/92

CORE: AMOCO Rebecca K
Bounds #1

BOX # 42b
BOX FOOTAGE 946 -956

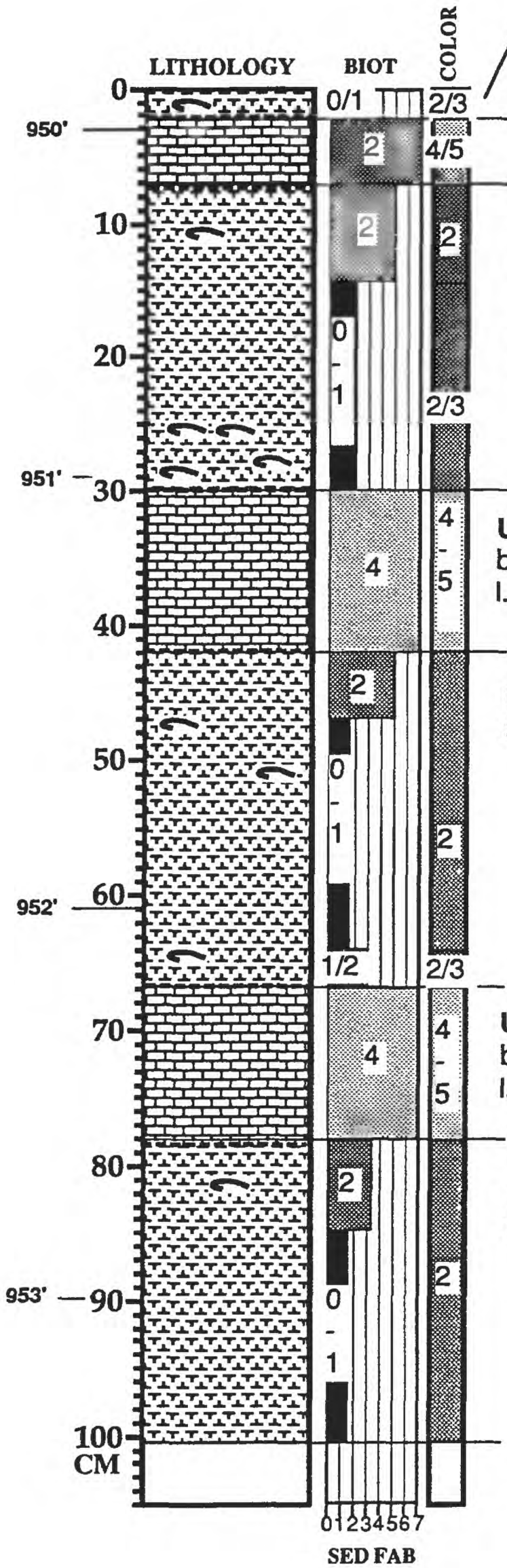

Unit 366 (cont.) - MARLSTONE as above;mod. lamin. (2); no ichnotaxa (0/1); lt. ol. gry. to ol. gry. (2/3); l. contact grad. over 1 cm

Unit 367 - 4.5cm; LIMESTONE ; very biot. (7); mod. lamin. (2); yel. gry. to v. lt. gry. (4/5); l. contact grad. over 2 cm

Unit 368 - 23 cm; MARLSTONE as above; sli. bioturb. (5) w/ small burrows (2) at top grading downward to mod. lamin. (2) w/ no ichnotaxa (0/1); lower part contains abund. Ino.-calcarenite debris and abund. plank. forams; lt. ol. gry. to ol. gry. (2/3); l. contact grad. over 2 cm

Unit 369 - 12 cm; LIMESTONE; very biot. (7) w/ large burrows (4); yel. gry. to v. lt. gry. (4/5) w/ v. lt. gry. burrow fill; l. contact grad. over 2 cm

Unit 370 - 25 cm; MARLSTONE as above (similar to Unit 368); l. contact grad. over 2 cm

Unit 371 - 11 cm; LIMESTONE; very biot. (7) w/ large burrows (4); yel. gry. to v. lt. gry. (4/5) w/ v. lt. gry. burrow fill; l. contact grad. over 2 cm

Unit 372 - 31 cm; MARLSTONE as above (similar to Units 368 and 370); Ino. frags. much less abund.

MAA/WED/BBS - 6/92

CORE: AMOCO Rebecca K
Bounds #1

BOX # 42c
BOX FOOTAGE 946-956

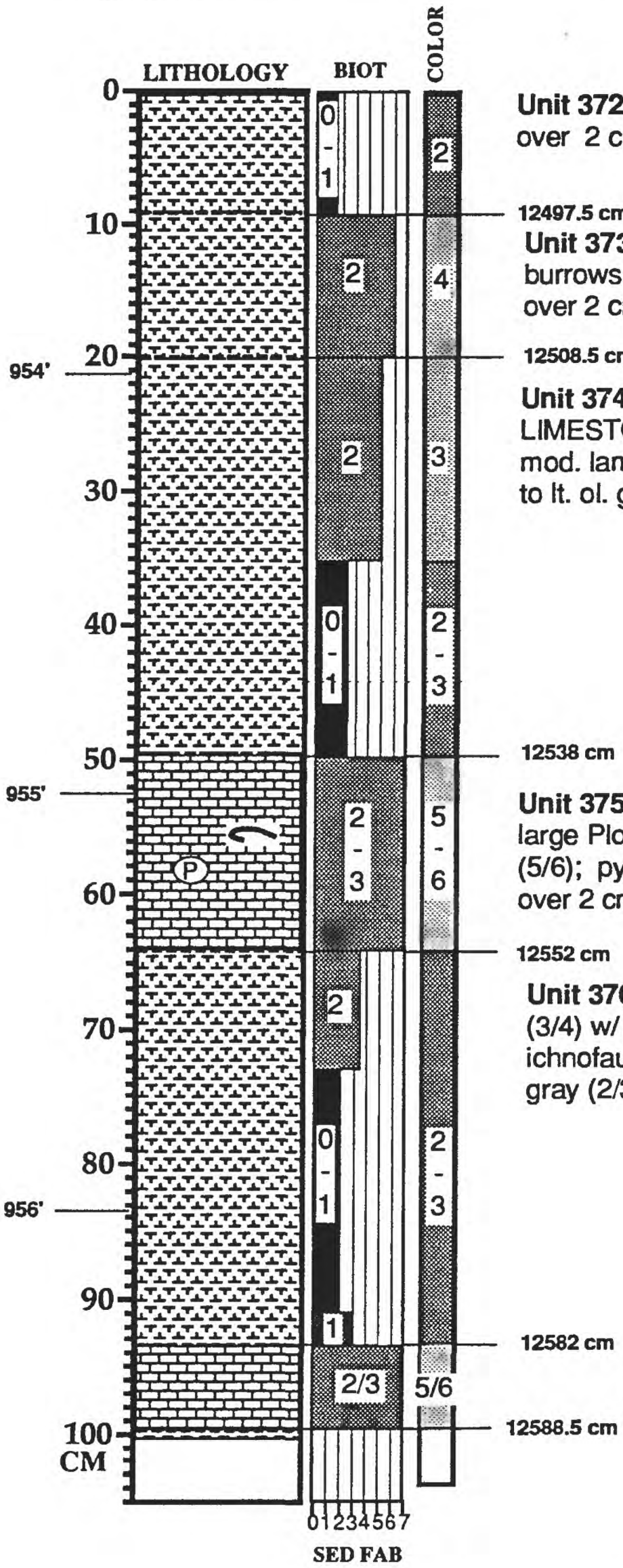

Unit 372 (cont.) - MARLSTONE as above; l. contact grad. over 2 cm

Unit 373 - 11cm; MARLSTONE; mod. biot. (6) w/ small burrows (2); med. lt. gray to yel. gray (4); l. contact. grad. over 2 cm

Unit 374 - 29.5 cm; MARLSTONE to MARLY LIMESTONE; sli. biot. (5) w/ small burrows (2) at top to mod. lamin. (2/3) w/ no ichnotaxa (0/1) at bottom; ol. gray to lt. ol. gray (2/3); l. contact. grad. over 2 cm

Unit 375 - 14 cm; LIMESTONE; very biot. (7) w/ small to large Plono. and Chond. burrows (2/3); v. lt. gray to white (5/6); pyrite nodule and rare Ino. debris; l. contact. grad. over 2 cm

Unit 376 - 30 cm; MARLSTONE; poorly lamin. to sli. biot. (3/4) w/ small burrows (2) at top to mod. lamin (2) w/ no ichnofauna (0/1) in middle and bottom; ol. gray to lt. ol. gray (2/3); l. contact. grad. over 1 cm

Unit 377 - 6.5 cm; LIMESTONE, similar to unit 375; l. contact grad. over 2 cm

MAA/WED/BBS - 6/92

CORE: AMOCO Rebecca K
Bounds #1

BOX #43a
BOX FOOTAGE 956-966

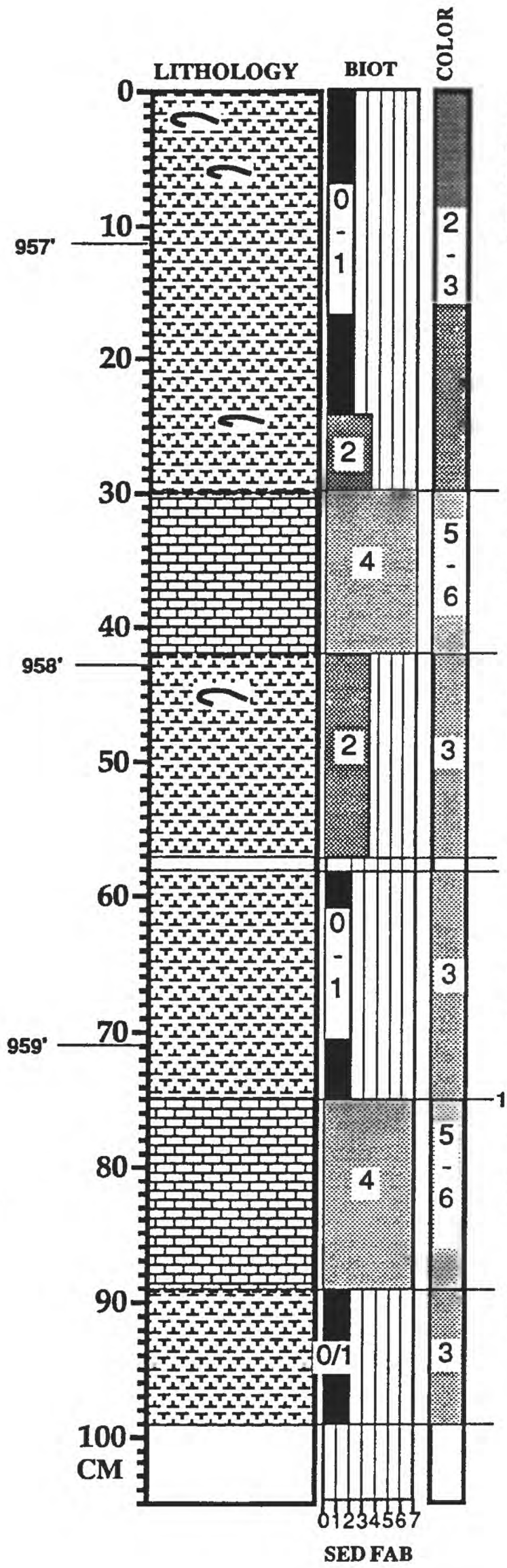

Unit 378 - 30.5 cm; MARLSTONE (actually begins 1 cm above base of 42c); mod. lamin. (2); no ichnotaxa (0/1); ol. gry. to lt. ol. gry. (2/3); Ino. frag. few to common; v. abund. plank. forams; thin calcisiltite laminae are mostly composed of forams; l. contact grad. over 3 cm

Unit 379 - 13 cm; LIMESTONE; v. biot. (7) w/ large burrows (4); v. lt. gry. to white (5/6); l. contact grad. over 3 cm

Unit 380 - 14 cm; MARLSTONE; poorly lam. to burrowed (3/4) at top; w/ some small Plano. burrows (2); lt. ol. gry. (3)

Unit 381 - 1 cm; sample taken; lith. unknown but prob. MARLSTONE like Units 380 and 382

Unit 382 - 16.5 cm; MARLSTONE; similar to Unit 380 but better lamin. (2) w/ no ichnofauna (0/1); l. contact grad. over 3 cm

Unit 383 - 14.5 cm; LIMESTONE very biot. (7) w/ large burrows (4); v. lt. gry. to white (5/6); l. contact grad. over 3 cm

Unit 384 - 26 cm; MARLSTONE; similar to Unit 382

MAA/WED/BBS - 6/92

CORE: AMOCO Rebecca K
Bounds #1

BOX # 43b
BOX FOOTAGE 956 -966

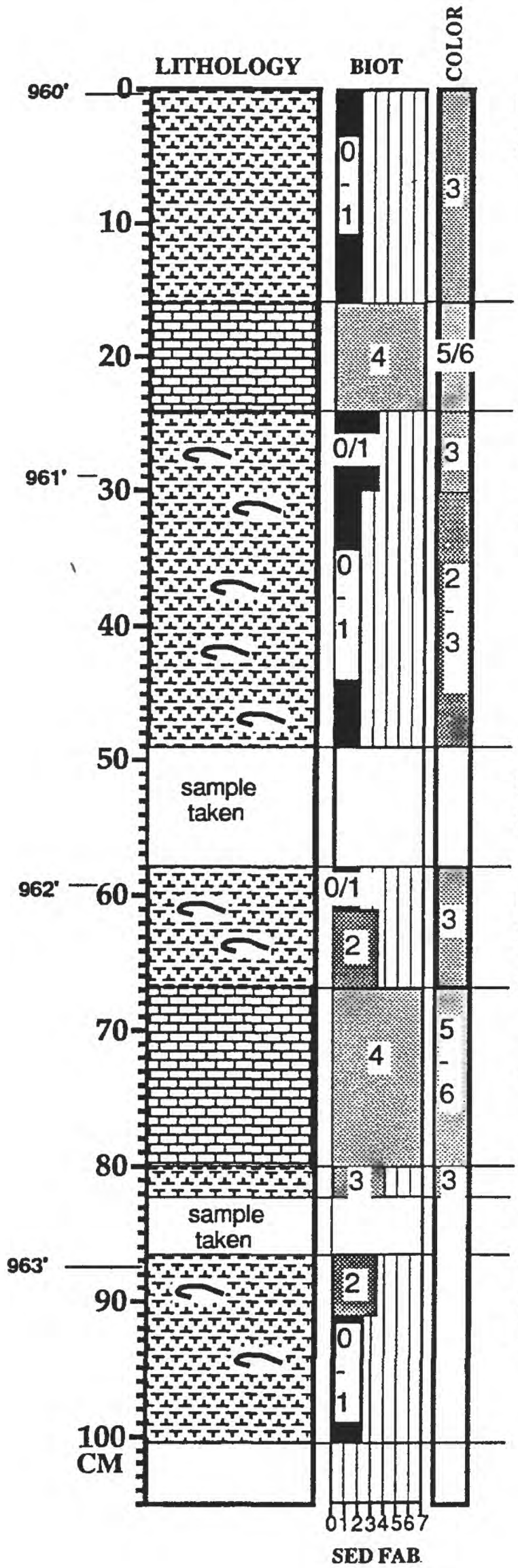

Unit 384 (cont.) - MARLSTONE as above; l. contact grad. over 1 cm

12721.5 cm

Unit 385 - 8.5 cm; LIMESTONE; very biot. (7) w/ large burrows (4); abund. small Plano. burrows at base; v. lt. gry. to white (5/6) w/ darker burrow fill; l. contact grad. over 1 cm

12730 cm

Unit 386 - 24.5 cm; MARLSTONE; mod. lamin (2) to poor. lamin (3); no ichnofauna (0/1); abund. Ino. frag. and plank. forams; lt. ol. gry. to ol. gry. (2/3)

12737 cm

Unit 387 - 9 cm; lith. unknown but prob. MARLSTONE as above and below

12746 cm

Unit 388- 9.5 cm; MARLSTONE as above; (similar to Unit 386); l. contact grad. over 1 cm

12755.5 cm

Unit 389 - 12.5 cm; LIMESTONE; similar to Unit 285; l. contact grad. over 2 cm

12768 cm

Unit 390- 9.5 cm; MARLSTONE as above

12770.5 cm

Unit 391- 4 cm; lith. unknown but prob. MARLSTONE as above and below

12774.5 cm

Unit 392 - 19 cm; MARLSTONE as above; (similar to Units 368 and 370); abund. Ino. frag. and plank. forams

MAA/WED/BBS - 6/92

CORE: AMOCO Rebecca K
Bounds #1

BOX # 43c
BOX FOOTAGE 956-966

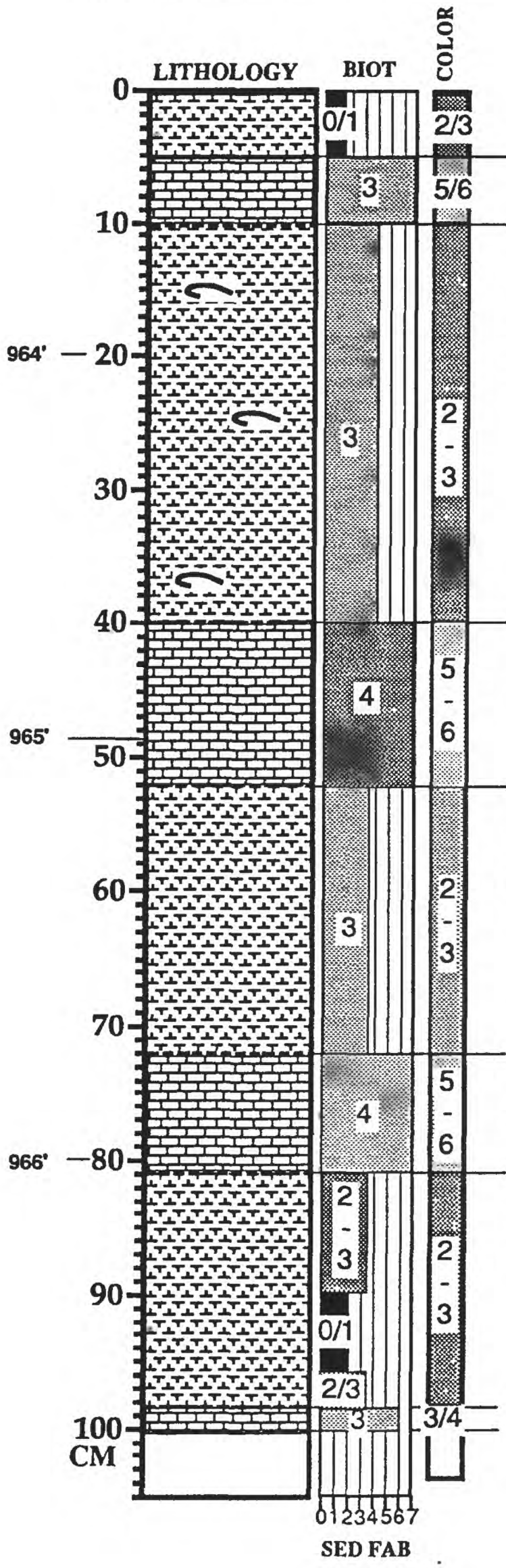

Unit 392 (cont.) - MARLSTONE as above; l. contact sharp

Unit 393 - 5 cm; LIMESTONE; highly bioturb. (7) w/ large burrows (3); v. lt. gry. to white (5/6) w/ darker (yel .gry.) burrow fill; l. contact grad. over 2 cm

Unit 394 - 30 cm; MARLSTONE to MARLY LIMESTONE; poorly lamin . to sli. biot. (3/4); common Ino. frag., abund. plank. forams; ol. gray to lt. ol. gray (2/3); l. contact. grad. over 1 cm

Unit 395 - 12 cm; LIMESTONE; similar to Unit 393; l. contact. grad. over 2 cm

Unit 396 - 21cm; MARLSTONE; similar to Unit 394; l. contact. grad. over 1 cm

Unit 397 - 8 cm; LIMESTONE; similar to above ls. units; l. contact. grad. over 2 cm

Unit 398 - 17.5 cm; MARLSTONE; similar to above marlst. units; l. contact. grad. over 1 cm

Unit 399 - 8 cm; LIMESTONE; similar to above ls. units

MAA/WED/BBS - 6/92

CORE: AMOCO Rebecca K
Bounds #1

BOX #44a
BOX FOOTAGE 966-977

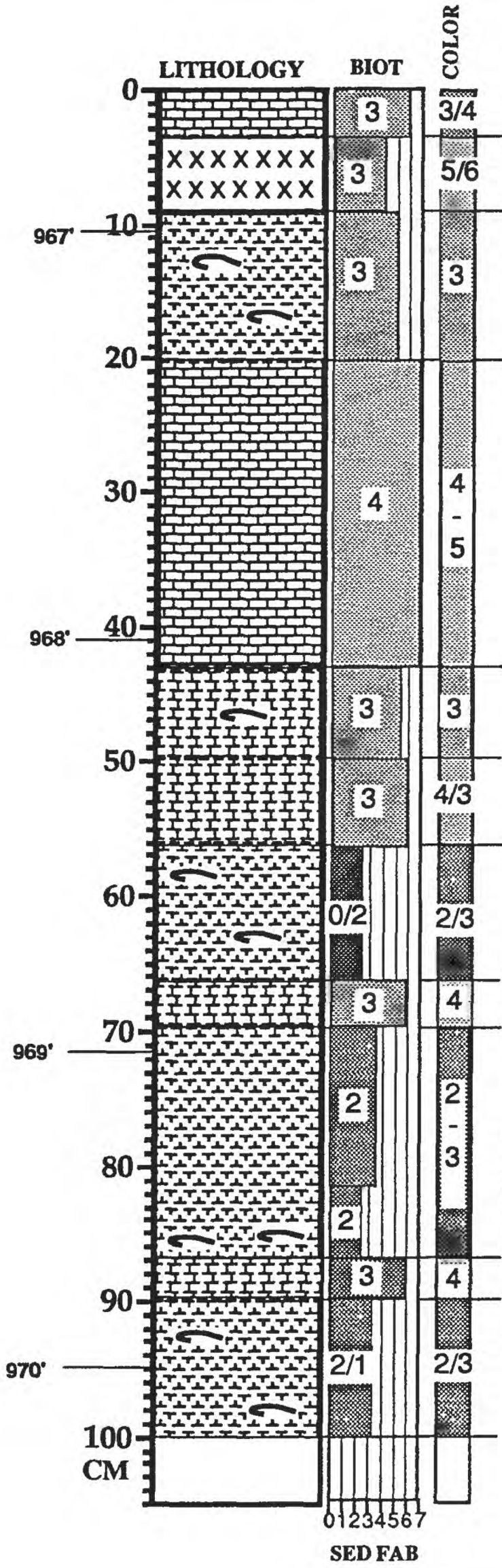

Unit 399 (cont.) - LIMESTONE as above; l. contact grad. over 1 cm

Unit 400 - 5.5 cm; BENTONITE (bentonite "C" of Elder, 1984); burrowed (4) w/ large burrows (3); v. lt. gry. to white (5/6); l. contact grad. over 1 cm

Unit 401 - 11 cm; MARLSTONE w/ rare calcisiltite laminae; some Ino. frag.; sli. burrowed (5) w/ large burrows (3); lt. ol. gry. (3); l. contact grad. over 2-3 cm

Unit 402 - 23 cm; LIMESTONE; v. biot. (7) w/ large burrows (4); yel. gry. to v. lt. gry. (4/5); l. contact grad. over 2-3 cm

Unit 403 - 6.5 cm; MARLY LIMESTONE; few Ino. frag., abund. plank. forams; sli. to mod. bioturb. (5/6) w/ small burrows (3); lt. ol. gry. (3); l. contact. grad. over 2 cm

Unit 404 - 6.5 cm; MARLY LIMESTONE; mod. bioturb. (6) w/ small burrows (3); yel. gry. to lt. ol. gry. (4/3); l. contact. grad. over 2 cm

Unit 405 - 10 cm; MARLSTONE w/ winnowed calcisiltite layers composed mainly of Ino. frag. and forams; mod. to poor. lamin. (2/3) w/ no burrows to a few small burrows (0/2); ol. gry. to lt. ol. gry. (2/3); l. contact grad. over 2 cm

Unit 406 - 3.5 cm; MARLY LIMESTONE; mod. biot. (6) w/ large burrows (3); yel. gry. (4); l. contact grad. over 1 cm

Unit 407 - 20.5 cm; MARLSTONE Ino. frag. and forams abund. near base; mod. to poor. lamin. (2/3) w/ some small burrows (2); ol. gry. to lt. ol. gry. (2/3); l. contact grad. over 1 cm

Unit 408 - 4 cm; MARLY LIMESTONE similar to Unit 406; l. contact grad. over 1 cm

Unit 409 - 22 cm; MARLSTONE; similar to Unit 407

MAA/WED/BBS - 6/92

CORE: AMOCO Rebecca K
Bounds #1

BOX # 44b
BOX FOOTAGE 966-977

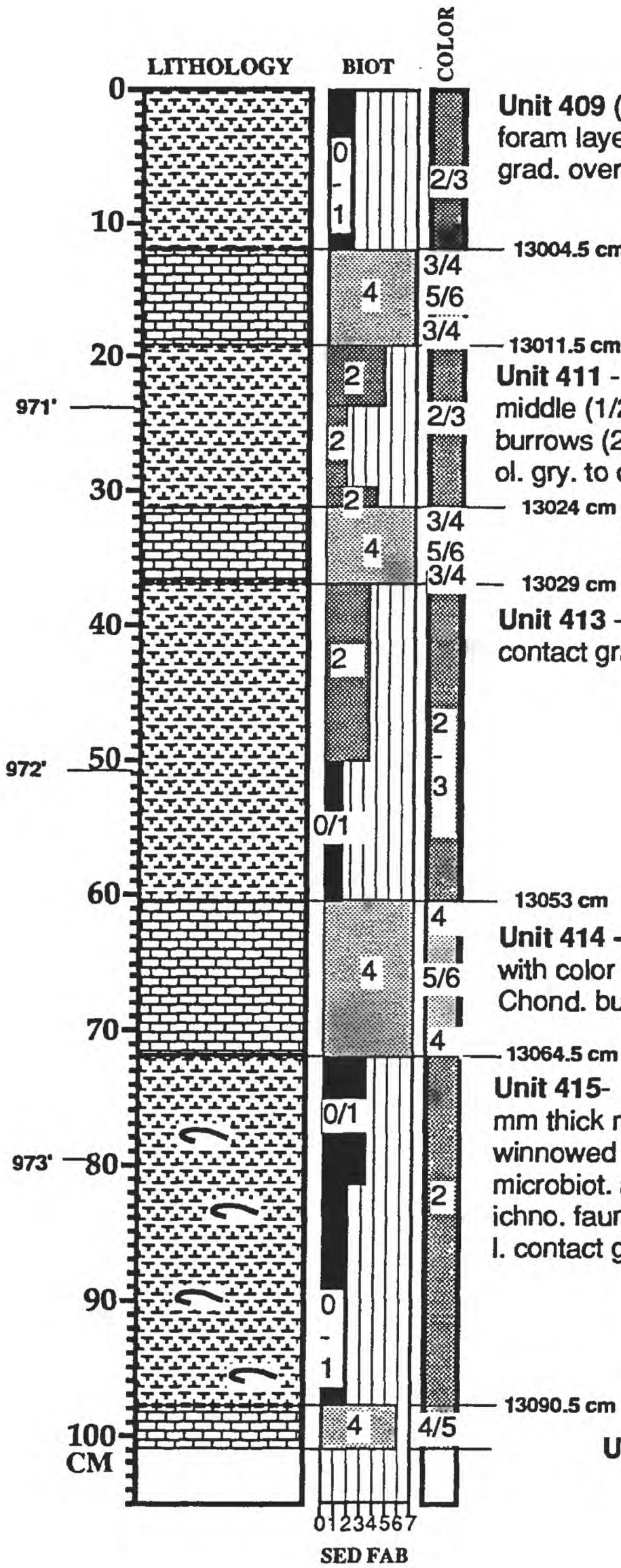

Unit 409 (cont.) - MARLSTONE as above w/ winnowed foram layers and abund. dissem. foram tests; l. contact grad. over 2 cm

Unit 410 - 7 cm; LIMESTONE; very biot. (7) w/ large burrows (4); v. lt. gry. to white (5/6) darker at top and base; l. contact grad. over 2 cm

Unit 411 - 12.5 cm; MARLSTONE; mod. to well lamin. in middle (1/2), burrowed top and bottom (4/5) w/ small burrows (2); abund. plank. forams in winnowed laminae; lt. ol. gry. to ol. gry. (2/3); l. contact grad. over 1 cm

Unit 412 - 5 cm; LIMESTONE similar to Unit 410; l. contact grad. over 2 cm

Unit 413 - 24 cm; MARLSTONE similar to Unit 411; l. contact grad. over 1 cm

Unit 414 - 11.5 cm; LIMESTONE similar to Unit 412 but with color variations from yel. gry. (4) to white (6); abund. Chond. burrows at base; l. contact grad. over 2 cm

Unit 415- 26 cm; MARLSTONE w/ abund. 1-7 mm thick muddy "subunits" interlamin. w/ winnowed foram calcisiltite layers and lenses; microbiot. at top (3/4), mod. to well lamin. w/ no ichno. fauna at base (2/1); ol. gry.(2); a few Inos.; l. contact grad. over 1 cm

Unit 416 - 6.5 cm; LIMESTONE similar to Unit 414

MAA/WED/BBS - 6/92

CORE: AMOCO Rebecca K
Bounds #1

BOX # 44c
BOX FOOTAGE 966-977

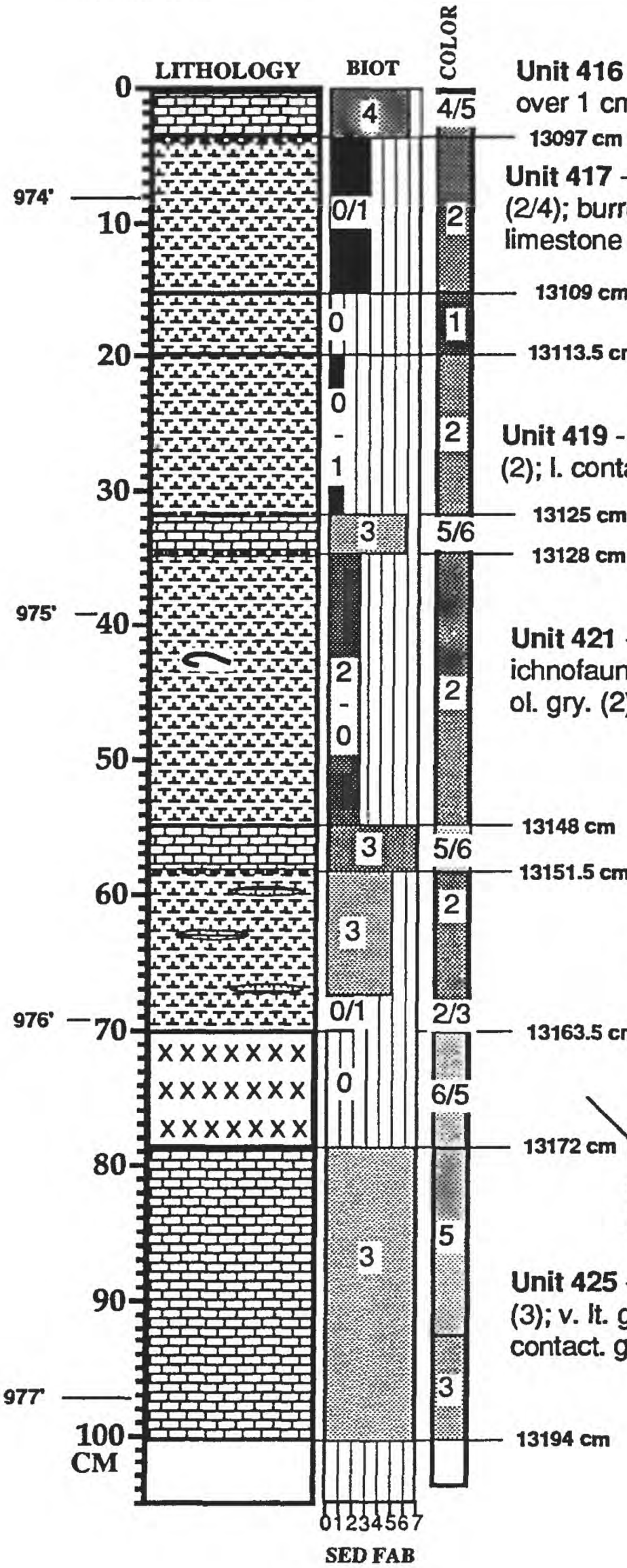

Unit 416 (cont.) - LIMESTONE as above; l. contact grad. over 1 cm

Unit 417 - 12 cm; MARLSTONE; mod. lamin . to sli. biot. (2/4); burrows filled w/ foram sand and lighter colored limestone from above; l. contact. sharp

Unit 418 - 4.5 cm; MARLSTONE w/ foram sand layers top and bottom; homog. (0) w/ no ichnofauna (0); ol. black to black (1); l. contact. sharp

Unit 419 - 11.5 cm; MARLSTONE; well lamin. (1); ol. gry. (2); l. contact. grad. over 0.5 cm

Unit 420 - 3 cm; LIMESTONE; mod. biot. (6) w/ large burrows (3); v. lt. gry. to white (5/6) grading to yel. gry. at contacts; l. contact. grad. over 1 cm

Unit 421 - 20 cm; MARLSTONE; well lamin (1) w/ no ichnofauna (0) to burrowed (4) with small Plano. burrows (2); ol. gry. (2); l. contact. sharp

Unit 422 - 3.5 cm; LIMESTONE; v. biot. (7) w/ large burrows (4); v. lt. gry. to white (5/6); l. contact. grad. over 1 cm

Unit 423 - 12 cm; MARLSTONE abund. laminae and lenses of winnowed foram sand (qtz. grain lag at the base of a foram sand lens @ 67-68 cm); ol. gry. (2), sl. bioturb. (5) w/ large burrows (3) at top grading downward to lt. ol. gry (3); lamin. (2/1) w/ no ichnofauna (0/1) at the base; l. contact. sharp

Unit 424 - 8.5 cm; BENTONITE (bentonite "B" of Elder, 1984); homogen. (0); white (6) grading to lt. gry (5) at top; l. contact. sharp

Unit 425 - 22 cm; LIMESTONE; v. bioturb. (7) w/ lg. burrows (3); v. lt. gry. (5) at top grading to lt. ol. gry (3) at base; l. contact. grad. over 1 cm

MAA/WED/BBS - 6/92

CORE: AMOCO Rebecca K
Bounds #1

BOX #45a
BOX FOOTAGE 977-987

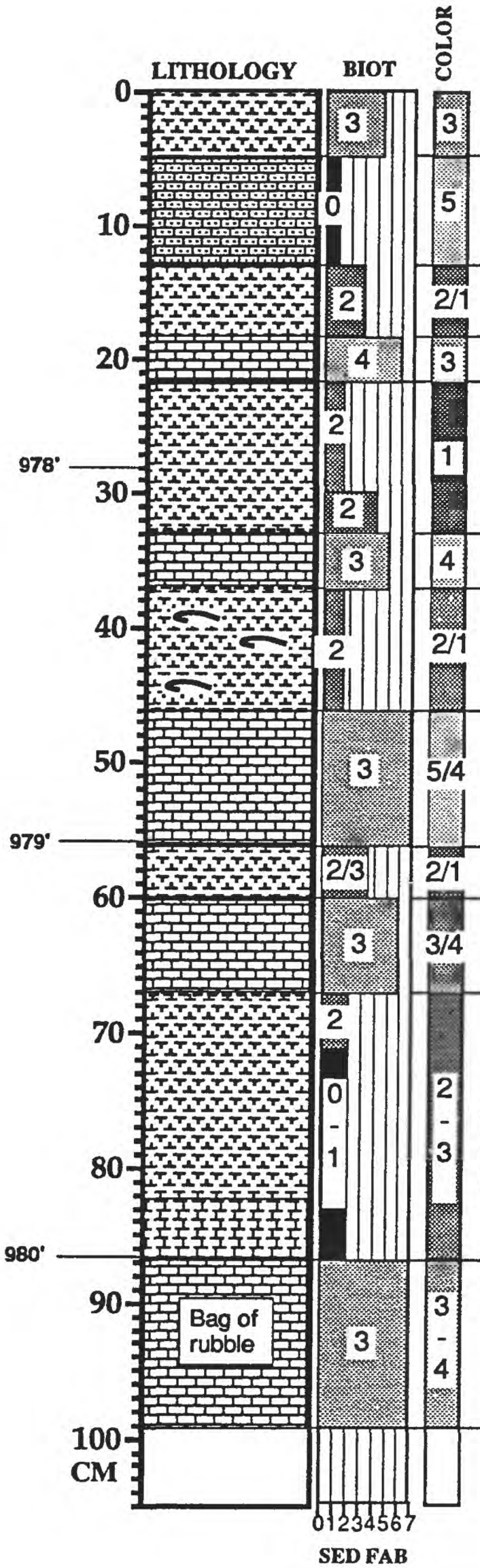

Unit 426 - 5 cm; MARLSTONE; bioturb. (4/5) w/ large burrows (3); ol. gry (3); l. contact sharp

13199 cm

Unit 427 - 8 cm; CALCARENITE composed of forams and other calcareous debris; poss. qtz. grains concen. at base; homogen. (0); v. lt. gry. (5); l. contact sharp

13207 cm

Unit 428 - 5 cm; MARLSTONE; mod. lamin. to burrowed 2/4) w/ small burrows (2); ol. gry. to ol. blk. (2/1); l. contact sharp

13212 cm

13215.5 cm

Unit 429 - 3.5 cm; LIMESTONE; mod. biot. (6) w/ large burrows (4); lt. ol. gry. (3); l. contact sharp

Unit 430 - 11.5 cm; MARLSTONE; lamin. at top to burrowed at base (2/4) w/ small burrows (2); ol. blk. (1); l. contact grad. over 1 cm

13227 cm

Unit 431 - 3.5 cm; LIMESTONE; sli. biot. (5) w/ large burrows (3); yel. gry. (4); l. contact grad. over 1 cm

13230.5 cm

Unit 432 - 9.5 cm; MARLSTONE w/ abund. Ino. frag. and winnowed foram laminae; mod. to well lamin. (2/1) w/ small burrows (2); ol. gry. to ol. blk. (2/1); l. contact grad. over 0.5 cm

13240 cm

Unit 433 - 10 cm; LIMESTONE; v. biot. (7) w/ large burrows (3); v. lt. gry. to yel. gry. (5/4); l. contact sharp

13250 cm

Unit 434 - 4 cm; MARLSTONE w/ winnowed foram calcisiltite layers; poor. lamin. to burrowed (3/4); w/ small burrows (2/3); gry. to ol. blk. (2/1); l. contact sharp

13254 cm

13261 cm

Unit 435 - 7 cm; LIMESTONE ; mod. biot. (6) w/ large burrows(3); lt. ol. gry. to yel. gry. (3/4); l. contact grad. over 3 cm

Unit 436 - 19 cm; MARLSTONE to MARLY LIMESTONE at base; winnowed foram layers increasing downcore in abund. and thick.; mod. lamin. (2) w/ some small burrows (2) near top; ol. gry. to lt. ol. gry. (2/3); l. contact grad. over 1 cm

13280 cm

Unit 437 - 13 cm?; LIMESTONE as a bag of rubble; appears to be similar to Unit 435

13293 cm

MAA/WED/BBS - 6/92

CORE: AMOCO Rebecca K
Bounds #1

BOX # 45b
BOX FOOTAGE 977-987

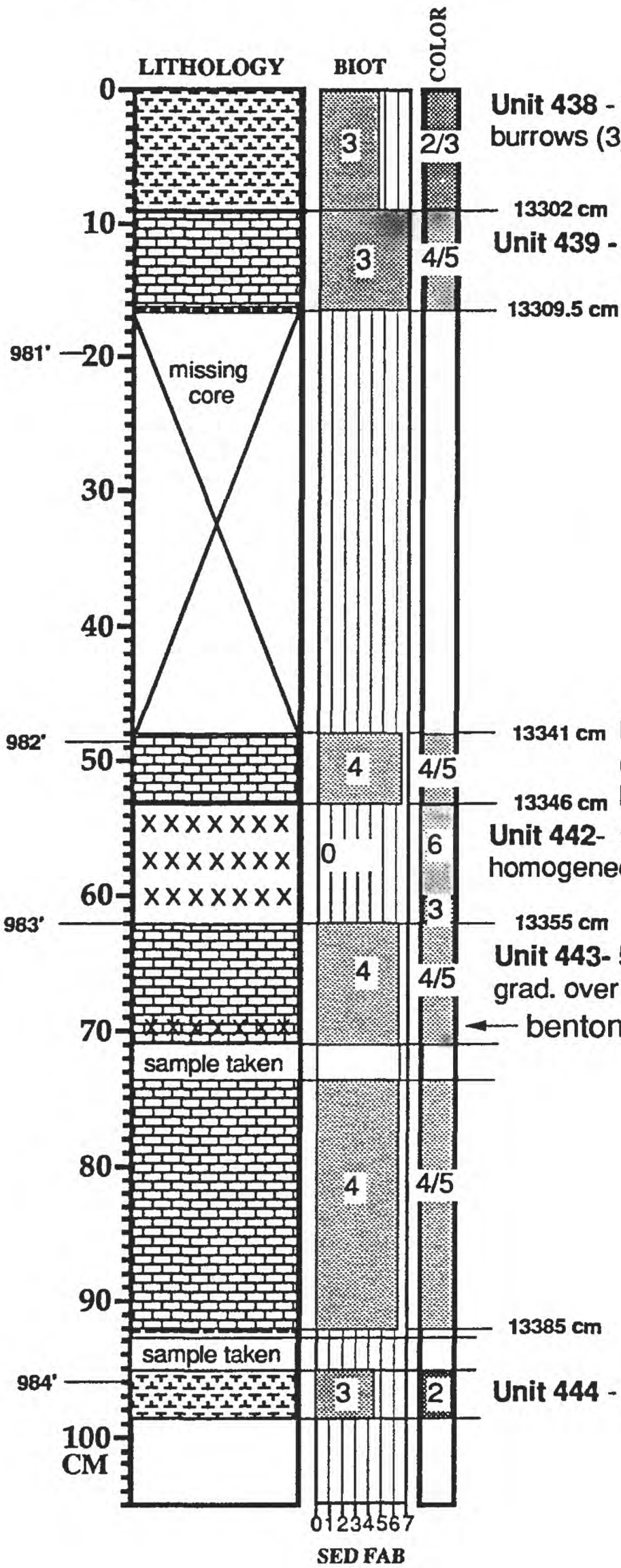

Unit 438 - 9 cm; MARLSTONE; sli. bioturb. (4/5) w/ large burrows (3); ol. gry. to lt. ol. gry. (2/3); l. contact sharp

13302 cm

Unit 439 - 7.5 cm; LIMESTONE; very biot. (7) w/ large burrows (3); lt. gry. (4/5)

13309.5 cm

Unit 440

MISSING

CORE

13341 cm

Unit 441- 5 cm; LIMESTONE; mod. to v. bioturb. (6/7) w/ large burrows (4); yel. gry. v. lt. gry. (4/5); l. contact sharp

13346 cm

Unit 442- 9 cm; BENTONITE (bentonite "A" of Elder, 1984); homogeneous (0); med. gray (3) at base to white (6); l. contact sharp

13355 cm

Unit 443- 5 cm; LIMESTONE similar to Unit 441; l. contact grad. over 2 cm

bentonitic zone

13385 cm

Unit 444 - 8.5 cm; MARLSTONE similar to unit 438

MAA/WED/BBS - 6/92

CORE: AMOCO Rebecca K
Bounds #1

BOX # 45c
BOX FOOTAGE 977-987

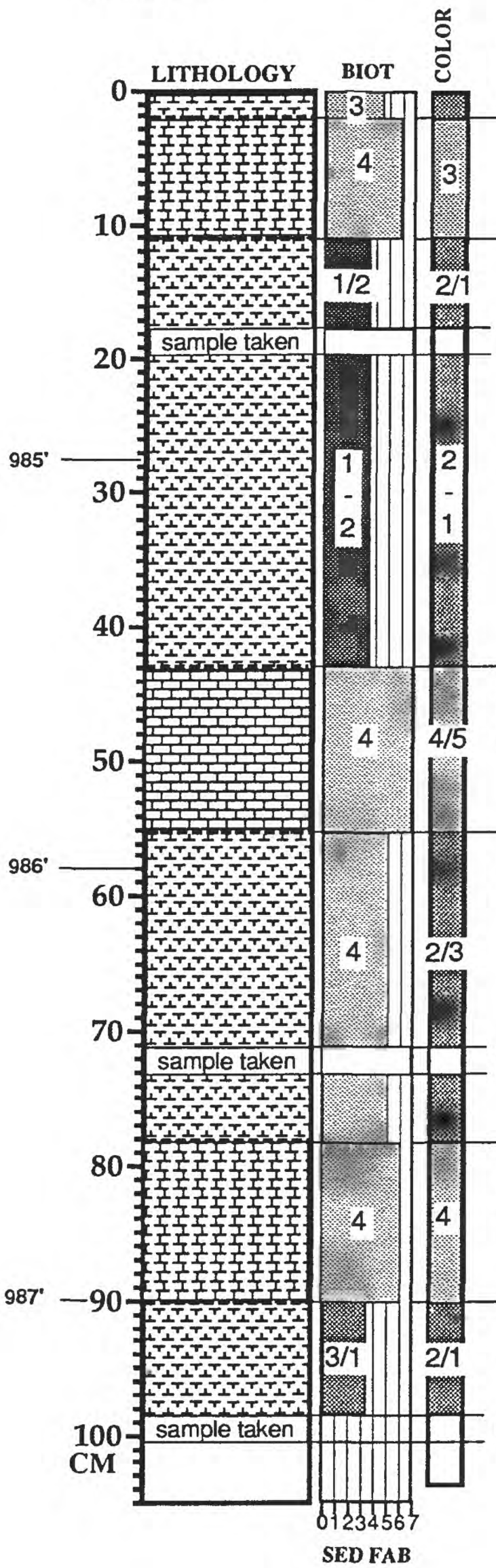

Unit 444 (cont.) - MARLSTONE as above; l. contact grad. over 2 cm

Unit 445 - 32 cm; MARLY LIMESTONE; mod. biot. (6) w/ large burrows (4); lt. ol. gry. to med. lt. gry. (3); l. contact. grad. over 2 cm

Unit 446 - 32 cm

(sample GH26 of Lewan)

MARLSTONE w/ some burrow fill by foram sand, winnowed calcarenite sand layers, and some mud layers; poor. lamin. to sli. burrowed (3/4) w/ small burrows (1/2); ol. gry. to ol. blk. (2/1); l. contact. grad. over 1 cm

Unit 447 - 11 cm; LIMESTONE; v. biot. (7) w/ large burrows (4); yel. gry. to v. lt. gry. (4/5); l. contact. grad. over 4 cm

Unit 448 - 23 cm; MARLSTONE TO MARLY LIMESTONE; sli. biot. (5) w/ large burrows (4); lt. ol. gry. to med. gry. (2/3); l. contact. grad. over 2 cm

(sample GH27 of Lewan)

Unit 449 - 13 cm; MARLY LIMESTONE; mod. bioturb. (6) w/ lg. burrows (4); med. lt. gry. (4); l. contact. grad. over 2 cm

Unit 450 - 27.5 cm; MARLSTONE; poor. lamin. to sl. bioturb. (3/4); microbiot. to some small burrows (3/1); ol. gry. to ol. blk. (2/1)

(sample GH28 of Lewan)

MAA/WED/BBS - 6/92

CORE: AMOCO Rebecca K
Bounds #1

BOX #46a
BOX FOOTAGE 987-997

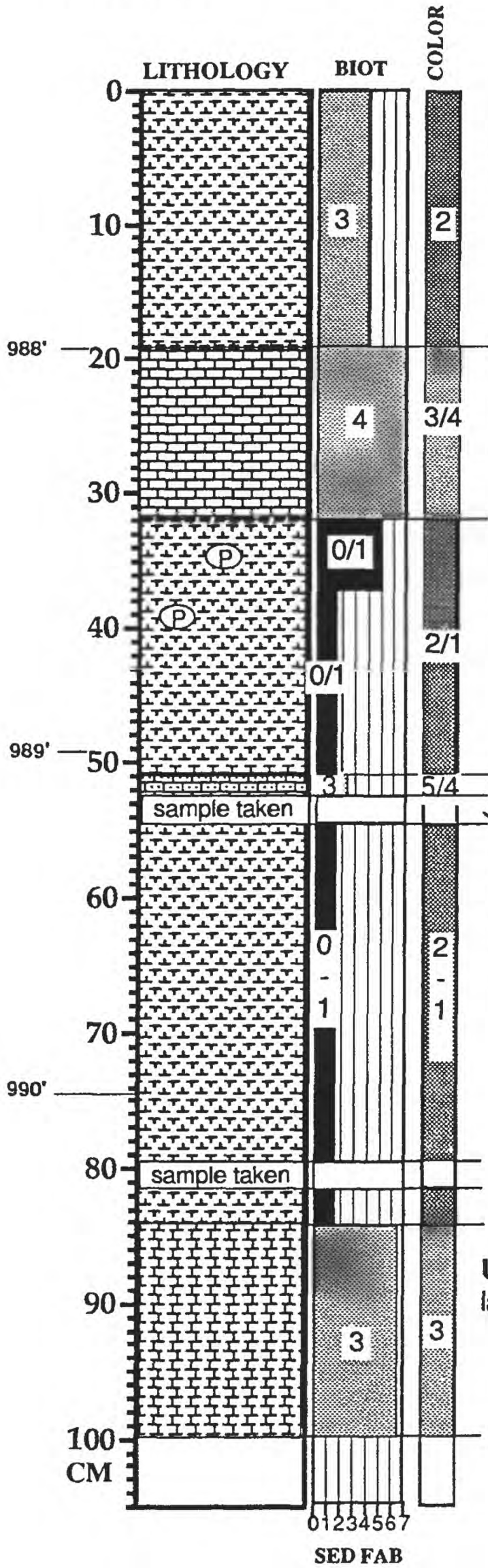

Unit 450 (cont.) - MARLSTONE; w/ common dissem. forams; poor. lamin. to sli. burrowed (3/5) w/ large burrows (3); ol. gry. (2); l. contact grad. over 2 cm

Unit 451 - 13 cm; LIMESTONE to MARLY LIMESTONE; well biot. (7) w/ large burrows (4); lt. gry. to med. gry. (3/4); l. contact grad. over 4 cm

Unit 452 - 9 cm; MARLSTONE w/ winnowed foram laminae; mostly mod. to well lamin. (2/1) but sli. burrowed at top; few descr. burrows (0/1); ol. gry. to ol. blk. (2/1); l. contact sharp

Unit 453 - 1.5 cm; CALCARENITE; burrowed in upper part; yel. gry. to v. lt. gry. (5/4)

(sample GH29 of Lewan)

Unit 454 - 32.5 cm; MARLSTONE w/ winnowed foram calcisiltite layers; mod. to well lamin. (2/1); w/ no burrows to a few small burrows (0/1); ol. gry. to ol. blk. (2/1); l. contact grad. over 2 cm

Unit 455 - 15 cm; MARLY LIMESTONE well biot. (6/7) w/ large burrows (3); lt. ol. gry. to med. lt. gry. (3)

BASE, BRIDGE CREEK LS. MBR., GREENHORN FM.

MAA/WED/BBS - 6/92

CORE: AMOCO Rebecca K
Bounds #1

BOX # 46b
BOX FOOTAGE 987-997

TOP, HARTLAND SH. MBR., GREENHORN FM.

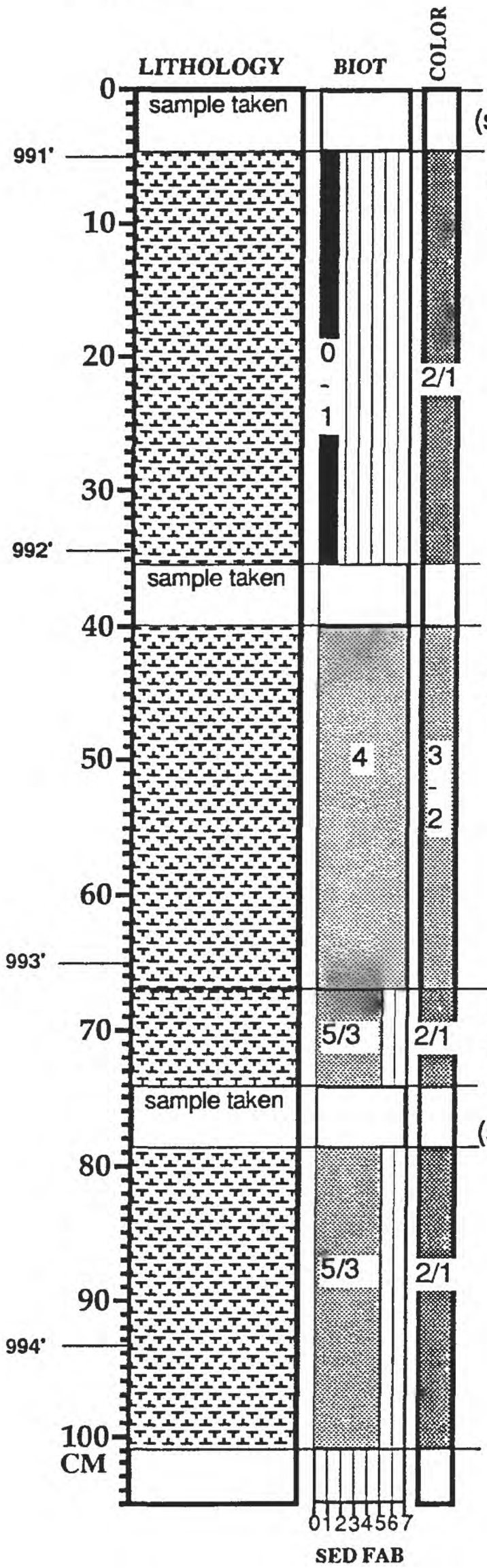

13590 cm
(sample GH30 of Lewan)

Unit 456 - 40 cm; MARLSTONE; well lamin. (2/1) w/ no ichnofauna (0/1); ol. gry. to ol. blk. (2/1)

(sample GH31 of Lewan)
13630 cm

Unit 457 - 27cm; MARLSTONE; v. biot. (7) w/ no large burrows (4); med. lt. gry. (3/2); l. contact grad. over 2 cm

13657 cm

Unit 458 - 100.5 cm; MARLSTONE; plank. forams less abund, and decrease in abund. dramatically below the base of the unit; sli. lamin. (2/1) to poor. lamin. (5/3); ol. gry. to ol. blk. (2/1)

(sample GH32 of Lewan)

MAA/WED/BBS - 6/92

CORE: AMOCO Rebecca K
Bounds #1

BOX # 46c
BOX FOOTAGE 987-997

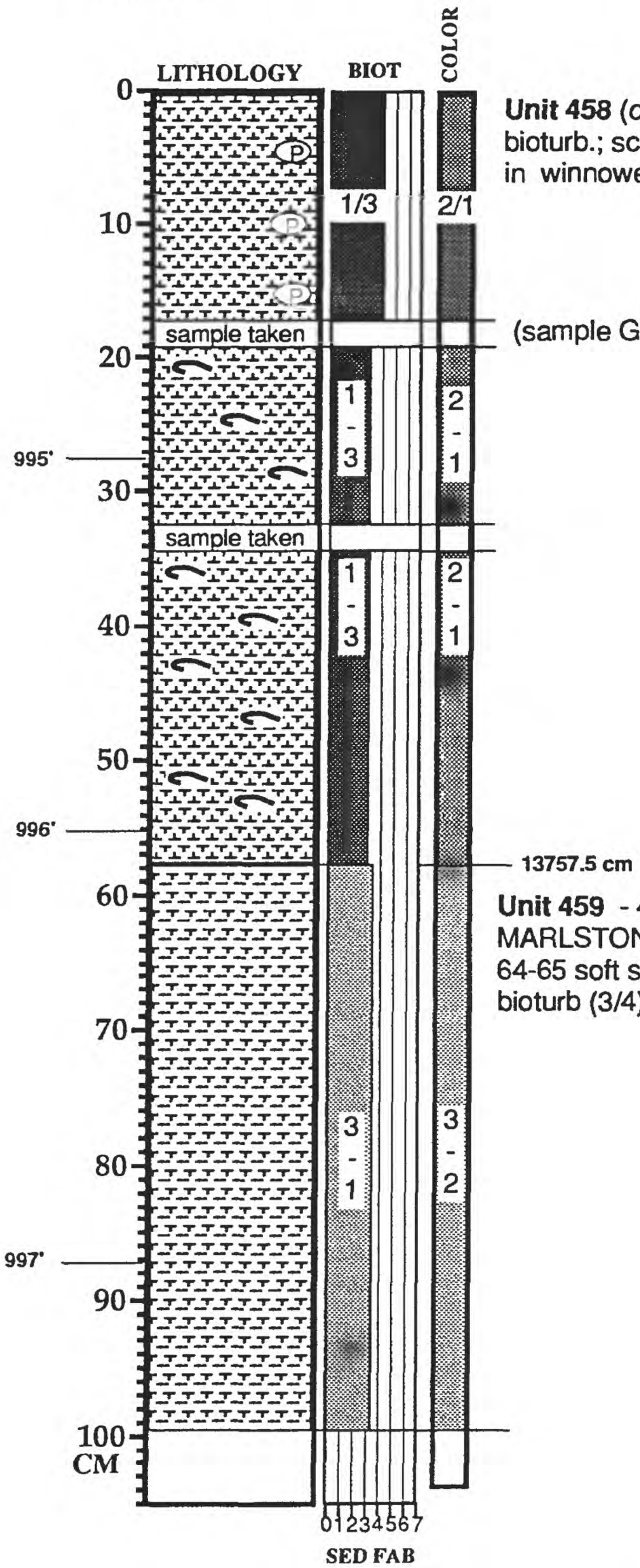

Unit 458 (*cont.*) - MARLSTONE as above; lamin. to sli. bioturb.; scat. pyrite nods.; plank forams common to abund. in winnowed layers; common Inos.; l. contact sharp

(sample GH33 of Lewan)

Unit 459 - 45 cm; CALCAREOUS CLAYSTONE to MARLSTONE ; few plank. forams visible; minor fecal pel.; 64-65 soft sed. deform. feature (slump?); poor. lamin. to sli. bioturb (3/4); ol. gry. to lt. ol. gry. (3/2)

MAA/WED/BBS - 6/92

CORE: AMOCO Rebecca K
Bounds #1

BOX #47a
BOX FOOTAGE 997-1007

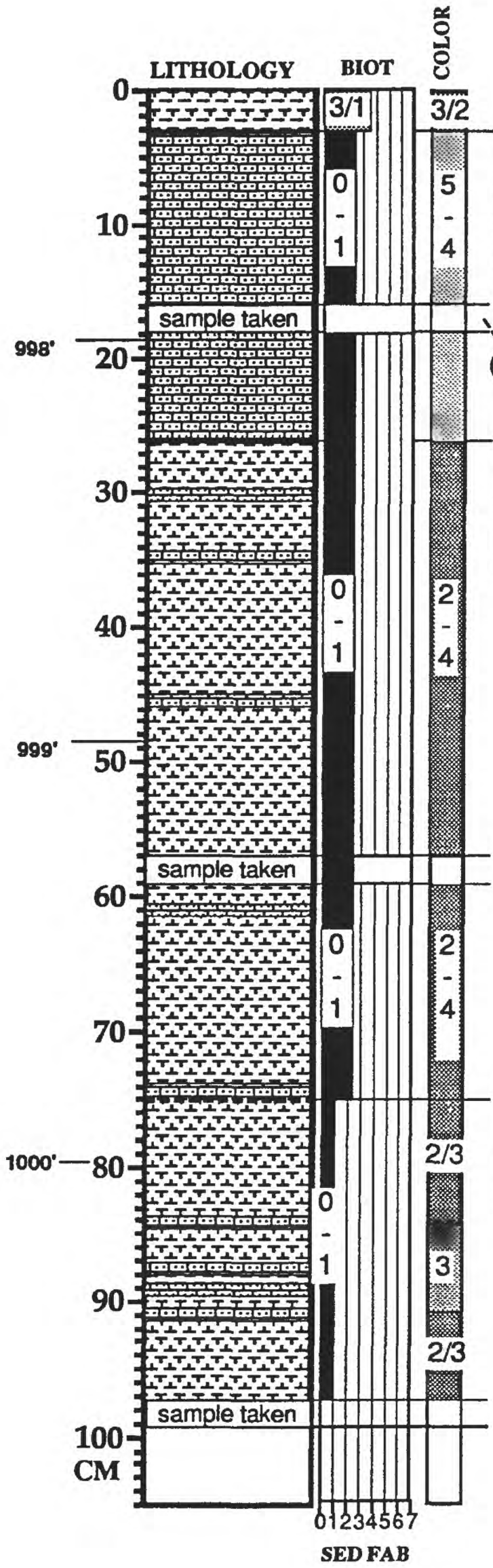

Unit 459 (cont.) - CALCAREOUS CLAYSTONE as above; l. contact sharp

Unit 460 - 23 cm; CALCARENITIC LIMESTONE; v. fine grained calcarenite layers in limestone (0.5-1.0 cm) w/ fish debris; calcarenites are composed predominantly of fecal pellets but also contain few to common molluscan shell fragments throughout; mod. to poor. lamin. (3/2) w/ no ichnotaxa (0/1); yel. gry. to v. lt. gry. (5/4)

(sample GH34 of Lewan)

Unit 461 - 49 cm; MARLSTONE w/ 0.5-5.0 cm lenses and beds of fecal-pel.-rich CALCARENITE; mostly mod. to poor. lamin. (2/3) w/ no ichnofauna (0/1); ol. gry. to lt. gry. in variable color bands (2/4); l. contact sharp

(sample GH35 of Lewan)

Unit 462 - 46.5 cm; MARLSTONE w/ 1-2 mm lenses and laminae of fecal-pel.-rich CALCARENITE; well. lamin. (1) w/ no ichnofauna (0/1); dk. ol. gry. to lt. ol. gry. (2/3)

MAA/WED/BBS - 6/92

CORE: AMOCO Rebecca K
Bounds #1

BOX # 47b
BOX FOOTAGE 997-1007

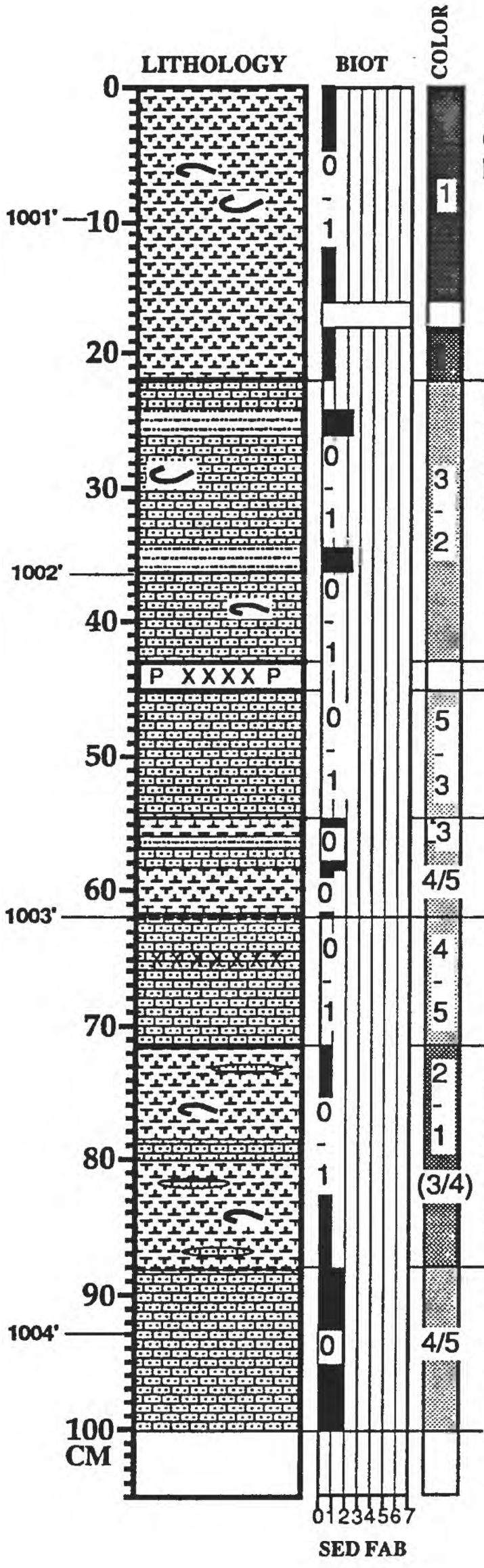

Unit 462 (cont.) - MARLSTONE as above grading downward to ol. blk. (1); 1-2 mm fecal pellet calcarenite bands; rare Inos. and plank. forams; l. contact sharp

13921 cm

Unit 463 - 21 cm; CALCARENITE w/ 2-3 cm zones of homogen. ol. blk MUDSTONE; homo. to poor. lamin.; no discrete burrows (0/1); light/dark banding of clay vs. fecal pel.; rare Ino. frag. and fish debris; l. contact sharp

13942 cm

13944 cm

Unit 464 - 2cm; BENTONITE; pyritized; dk. green to dk. yel. orange; l. contact sharp

13953.5 cm

Unit 465 - 9.5 cm; CALCARENITE; v. fine grained; strong. cemented; homo.; no discrete burrows (0/1); a few Ino. frag. & prisms; com. to abund. plank. forams; lt. gry. to v. lt. gry. (5/3); l. contact sharp

13961 cm

Unit 466 - 7.5 cm; banded MARLSTONE w/ dk. MUDSTONE & CALCARENITE; mod. to well lamin. (2/1) w/ no ichnotaxa (0); med. gry. to v. lt. gry. (3-5); l. cont. grad. over 2 cm

13970.5 cm

Unit 467 - 9.5 cm; CALCARENITE; w/ bentonitic frag.; v. fine grained; homogen.; no discrete burrows (0/1); v. lt. gry. (4/5); l. contact sharp

Unit 468 - 16 cm; MARLSTONE w/ lighter colored CALCERENITE laminae and lenses containing fecal pel., qtz. grains, forams, Ino. prisms, fish debris; bentonitic frag.; v. fine grained; well lamin. (1) w/ no discrete burrows (0/1); ol. gry. to ol. blk. (2./1); l. contact grad. over 4-5 cm

13986.5 cm

Unit 469 - 18 cm; CALCARENITE; w/ minor ol. blk. clayey stringers containing Ino. frag., fish debris, plank. forams and fecal pel.; homogen.to lam. (0-3); no ichnotaxa (0); lt. ol. gry. (4/5)

MAA/WED/BBS - 6/92

CORE: AMOCO Rebecca K Bounds #1

BOX # 47c
BOX FOOTAGE 997-1007

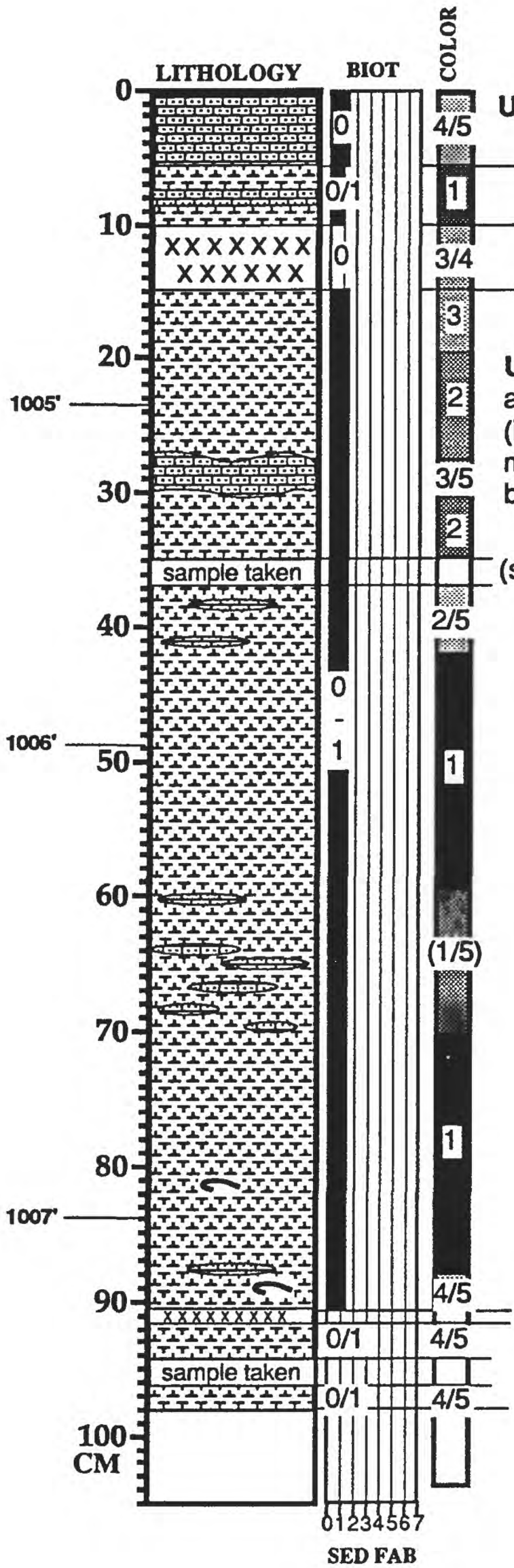

Unit 469 (cont.) - CALCARENITE as above; l. contact sharp

14004.5 cm

14009 cm

Unit 470 - MARLSTONE w/ CALCARENITE bed; well lamin. (1) w/ no ichnotaxa (0/1); ol. blk. (1); l. contact sharp

14014 cm

Unit 470 - 5 cm; BENTONITE; med. gry. to lt. green (3/4); l. contact sharp

Unit 472 - 75.5 cm; MARLSTONE w/ thin CALCISILTITE beds and laminae containing abund. fecal pel. & plank. forams (irreg. lower contacts); well to mod. lamin (1/2) w/ microbioturb. in some zones (0/1); variable color (as noted) w/ background color of dk ol. gry. to ol. blk. (1/2)

(sample GH37 of Lewan)

rare small Ino. frag.

thin-shelled Inos. in bedding planes

thin-shelled Inos. in bedding planes

14089.5 cm

14090.5 cm

Unit 473 - 1 cm; BENTONITE; med. lt. gry. w/ iron staining; contacts grad.

Unit 474 - 26 cm; MARLSTONE as above

MAA/WED/BBS - 6/92

CORE: AMOCO Rebecca K
Bounds #1

BOX #48a
BOX FOOTAGE 1007-1017

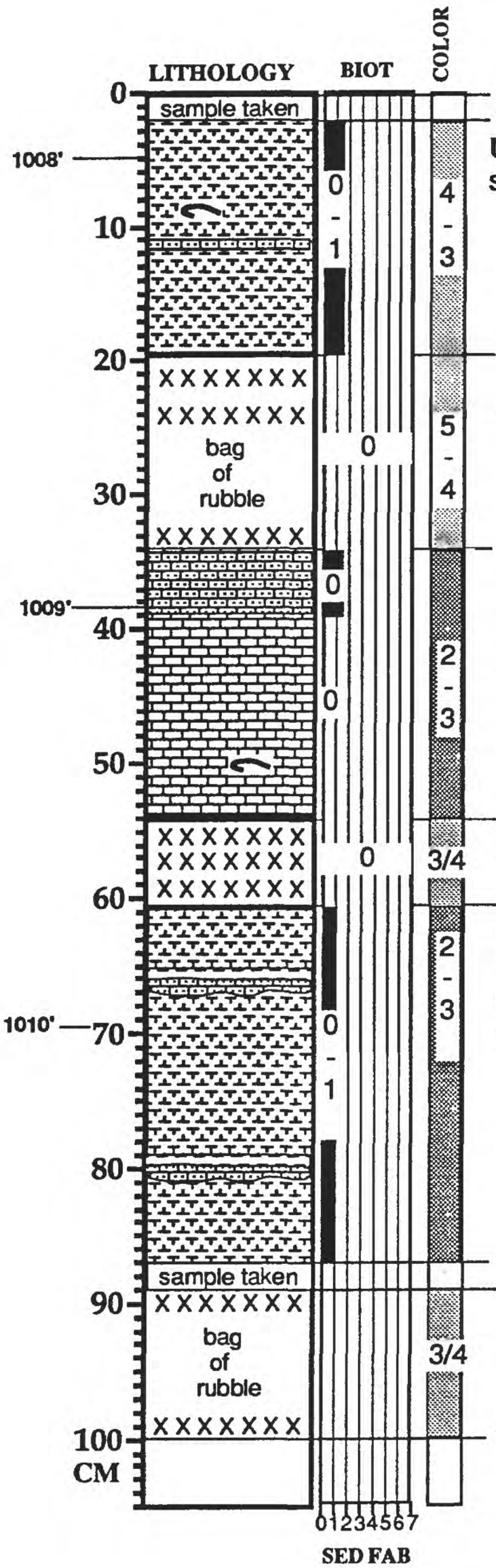

(sample GH38 of Lewan)

Unit 474 (cont.) - MARLSTONE as above; rare small Ino. frag; rare thin (<1 mm) calcisiltite layers

14116.5 cm

Unit 475- 14.5 cm; BENTONITE as a bag of rubble; v. lt. gry. to lt. gry. (5/4)

14131 cm

Unit 476 - 28.5 cm; LIMESTONE; top 4-5 cm banded w/ 1-2 mm thick CALCISILTITE layers rich in fecal pel.; v. finely lamin. (1) w/ no ichnofauna (0/1); dk. ol. gry. to lt. gry. (2/3); l. contact sharp

14152 cm

Unit 477- 5.5 cm; BENTONITE; lt. gry. (3/4); l. contact sharp

14157.5 cm

Unit 478 - 28.5 cm; MARLSTONE w/ 1-3 mm layers of fecal-pel.-rich CALCARENITE overlain by homogeneous clay layers; well. lamin. (1) w/ some more poorly lamin. zones (3); no ichnofauna (0/1); dk. ol. gry. to lt. ol. gry. (2/3)

14186 cm (sample GH39 of Lewan)

Unit 479- 13.5 cm; BENTONITE as a bag of rubble; lt. gry. (3/4)

14197.5 cm

MAA/WED/BBS - 6/92

CORE: AMOCO Rebecca K
Bounds #1

BOX # 48b
BOX FOOTAGE 1007-1017

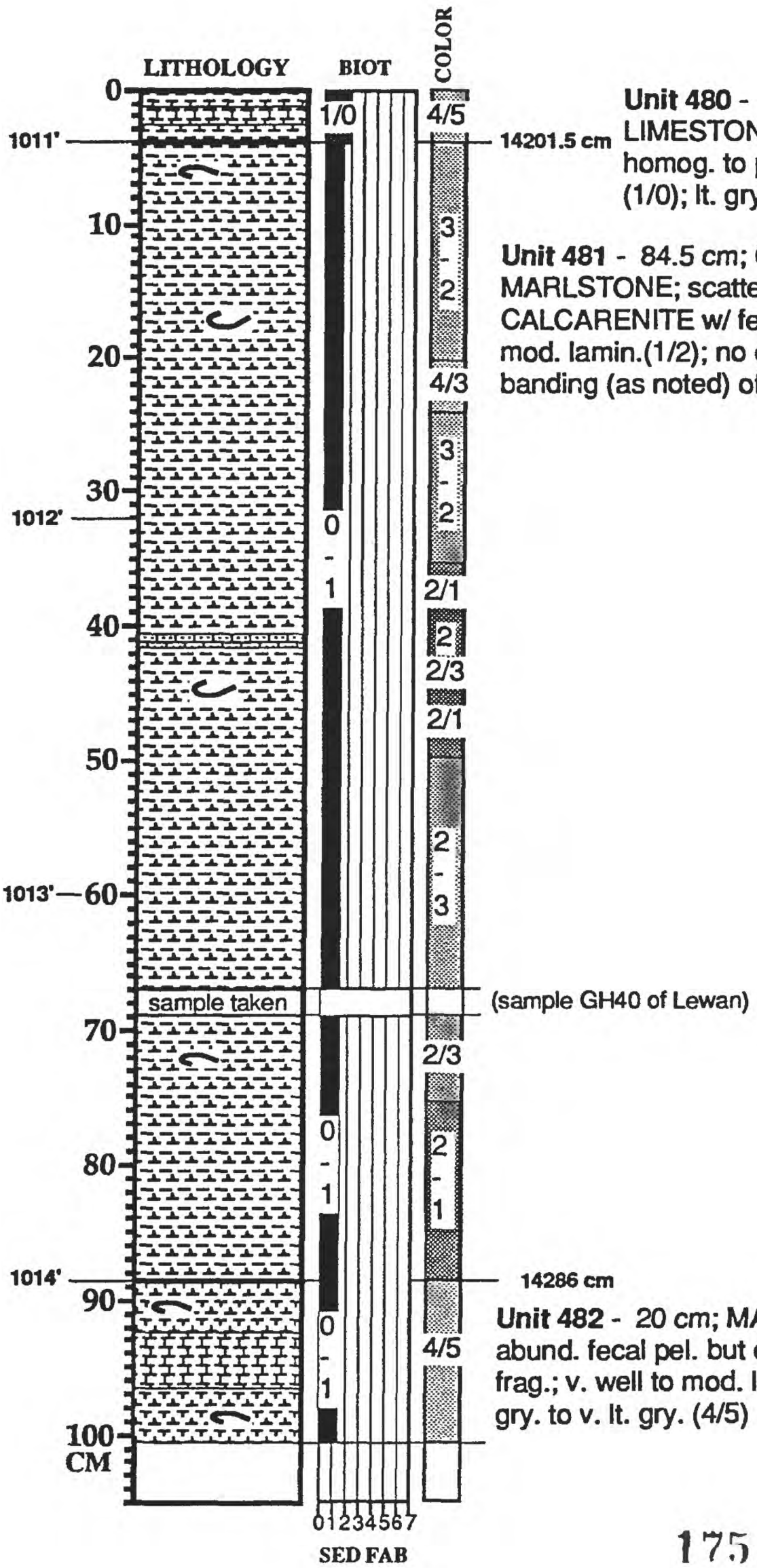

Unit 480 - 4 cm; MARLSTONE to MARLY LIMESTONE; fecal pellet rich; scattered Ino. frag.; homog. to poorly lamin. (0-3) w/ some microbioturb. (1/0); lt. gry. to v. lt. gry. (4/5); l. contact sharp

Unit 481 - 84.5 cm; CALCAREOUS MUDSTONE to MARLSTONE; scattered layers and lenses of CALCARENITE w/ few Ino. frag. and fish debris; well to mod. lamin.(1/2); no discrete burrows (0/1); light/dark banding (as noted) of clay vs. fecal pel.; l. contact sharp

Unit 482 - 20 cm; MARLSTONE to MARLY LIMESTONE; abund. fecal pel. but diminishes downward in unit; rare Ino. frag.; v. well to mod. lamin (1/2) w/ no ichnotaxa. (0/1); lt. gry. to v. lt. gry. (4/5)

MAA/WED/BBS - 6/92

CORE: AMOCO Rebecca K Bounds #1

BOX # 48c
BOX FOOTAGE 1007-1017

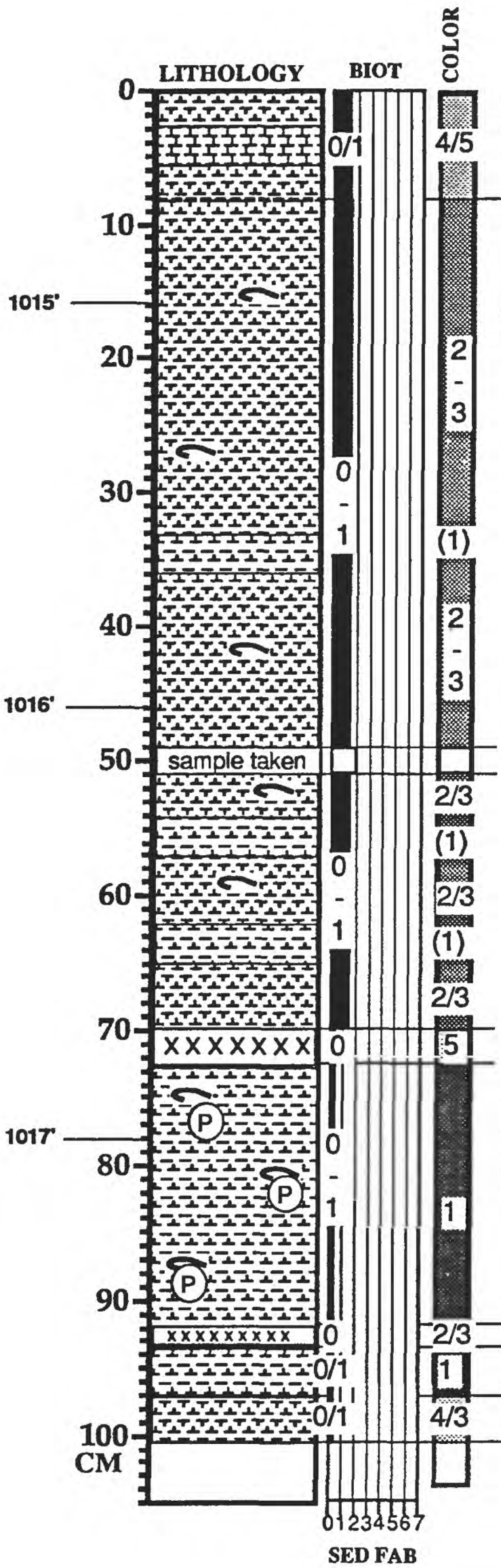

Unit 482 (cont.) - MARLSTONE to MARLY LIMESTONE as above; l. contact grad. over 1 cm

Unit 483 - 62 cm; MARLSTONE abund. fecal pel.; scattered lno. frag.; well lamin. (1/2) w/ a few discrete burrows (0/1); ol. gry. to lt. ol. gry. (2/3) w/ several zones of ol. blk. (1) CALC. CLAYSTONE; l. contact sharp

(sample GH41 of Lewan)

Unit 484 2.5 cm; BENTONITE; v. lt. gry. (5); contacts sharp

Unit 485 - 19 cm; CALC. MUDSTONE to MARLSTONE; few fecal pel.; minor lno. frags (pyritized); well lamin. (1/0) w/ no ichnotaxa (0/1); ol. blk. (1); l. contact grad over 0.5 cm

Unit 486- 2 cm; BENTONITE; ol. gry. to v. lt. gry. (2/3); grad. contacts

Unit 487 - 3.5 cm; CALC. MUDSTONE to MARLSTONE similar to Unit 485; l. contact sharp

Unit 488- 34 cm; MARLSTONE

MAA/WED/BBS - 6/92

CORE: AMOCO Rebecca K
Bounds #1

BOX #49a
BOX FOOTAGE 1017-1027

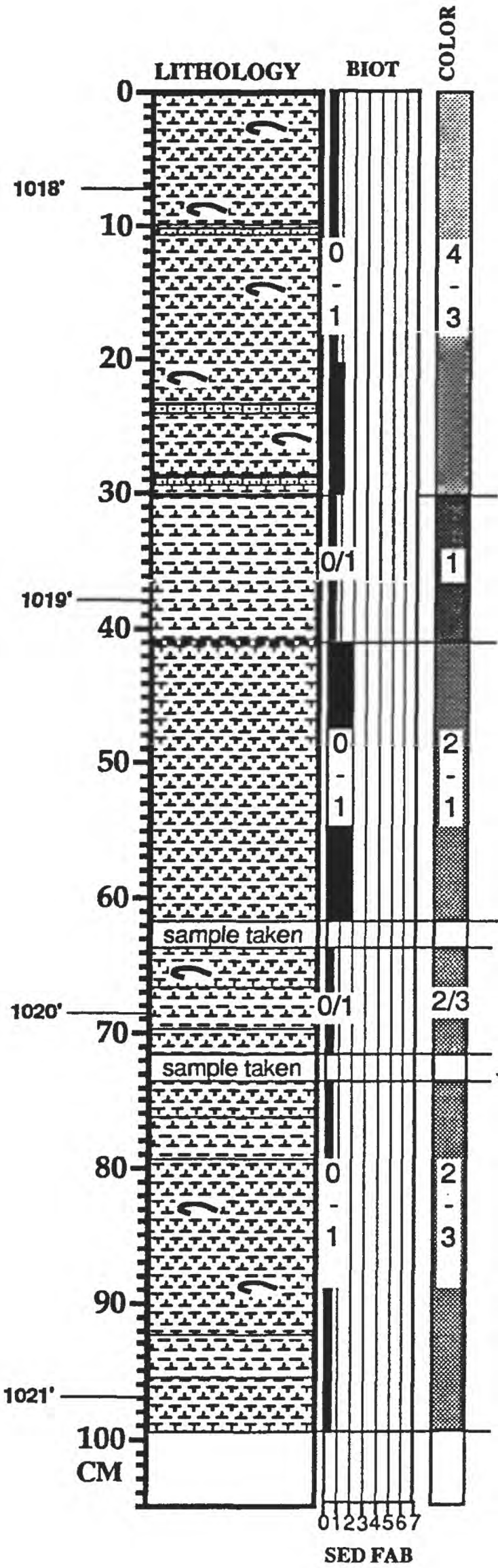

Unit 488 (cont.) - MARLSTONE; abund. fecal pel.; scattered lno. frag; thin (1-3 mm) calcisiltite layers; well lamin. (1 to 1/0) w/ no ichnotaxa; ol. gry. to yel. gry. (4/3); l. contact sharp

14429 cm

Unit 489 - 11 cm; CALC. CLAYSTONE; rare fecal pel.; well lamin. (1 to 1/0) w/ no ichnotaxa (0/1); ol. blk. (1); l. contact grad. over 1 cm

14440 cm

Unit 490 - 20.5 cm; MARLSTONE; abund. fecal pel.; scattered lno. frag; thin (1-3 mm) calcisiltite layers; v. well lamin. (almost varve-like; 1/3) mostly w/ no ichnotaxa but some microburrowing (0/1); ol. gry. to ol. blk. (2/1)

14460.5 cm

Unit 491 - 65.5 cm; MARLSTONE to CALC. MUDSTONE; abund. fecal pel. in 0.5-1 mm lenses; scattered lno. frag; well lamin. w/ some homo. bands and layers (1/0); no ichnotaxa (0/1); ol. gry. to med. gry. (2/3)

(sample GH42 of Lewan)

MAA/WED/BBS - 6/92

CORE: AMOCO Rebecca K
Bounds #1

BOX # 49b
BOX FOOTAGE 1017-1027

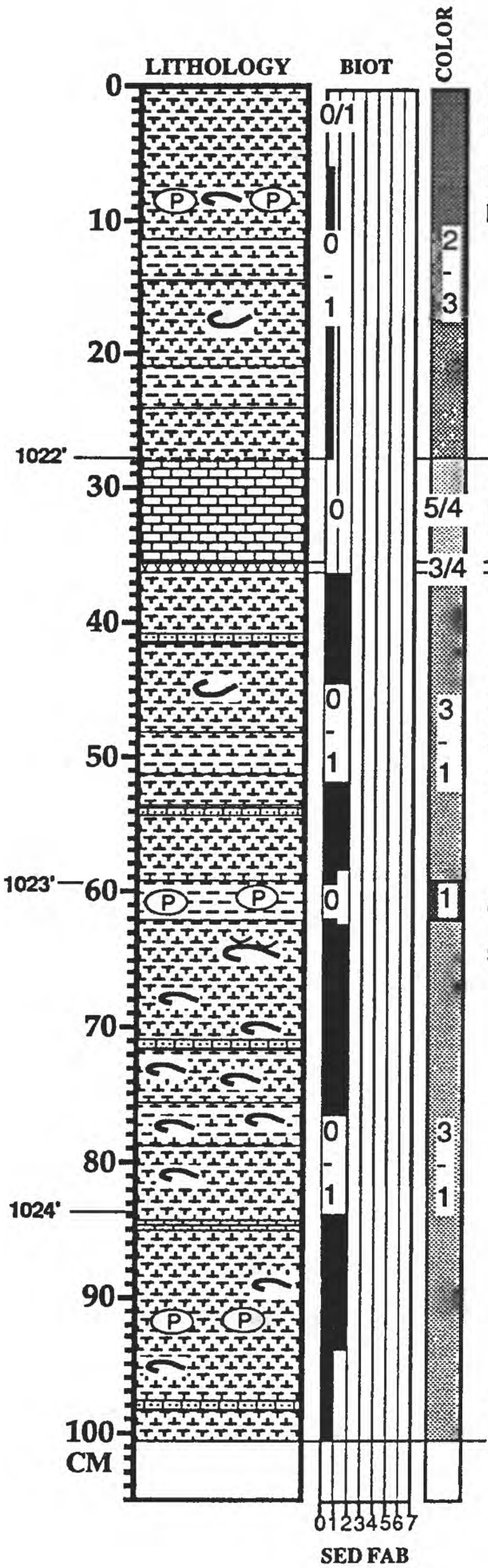

Unit 491 (cont.)- MARLSTONE to CALCAREOUS MUDSTONE as above; l. contact grad. over 1 cm

limonite stringers
pyrite w/ Ino. frag.

14526 cm

Unit 492 - 8 cm; LIMESTONE; homog. (0) w/ no visible burrows (0); lt. gry. (5/4); l. contact sharp

14534 cm
14534.5 cm

Unit 493 - 0.5 cm; BENTONITE; yel. gry. to lt. ol. gry. (3/4)

Unit 494 (cont.)- 87.5 cm; MARLSTONE to CALCAREOUS MUDSTONE; CALCISILTITE laminae and lenses (<2 mm) scattered throughout; 68-80 cm, common to abund Ino. frag.; well to poor. lamin. (1/3) w/ no ichnotaxa (0/1); ol. blk. to ol. gry (3/1)

ol. blk homog. CLAYSTONE w/ pyrite nodules

shell islands

Calcarenite-rich Lincoln-type facies begins about here

MAA/WED/BBS - 6/92

CORE: AMOCO Rebecca K Bounds #1

BOX # 49c
BOX FOOTAGE 1017-1027

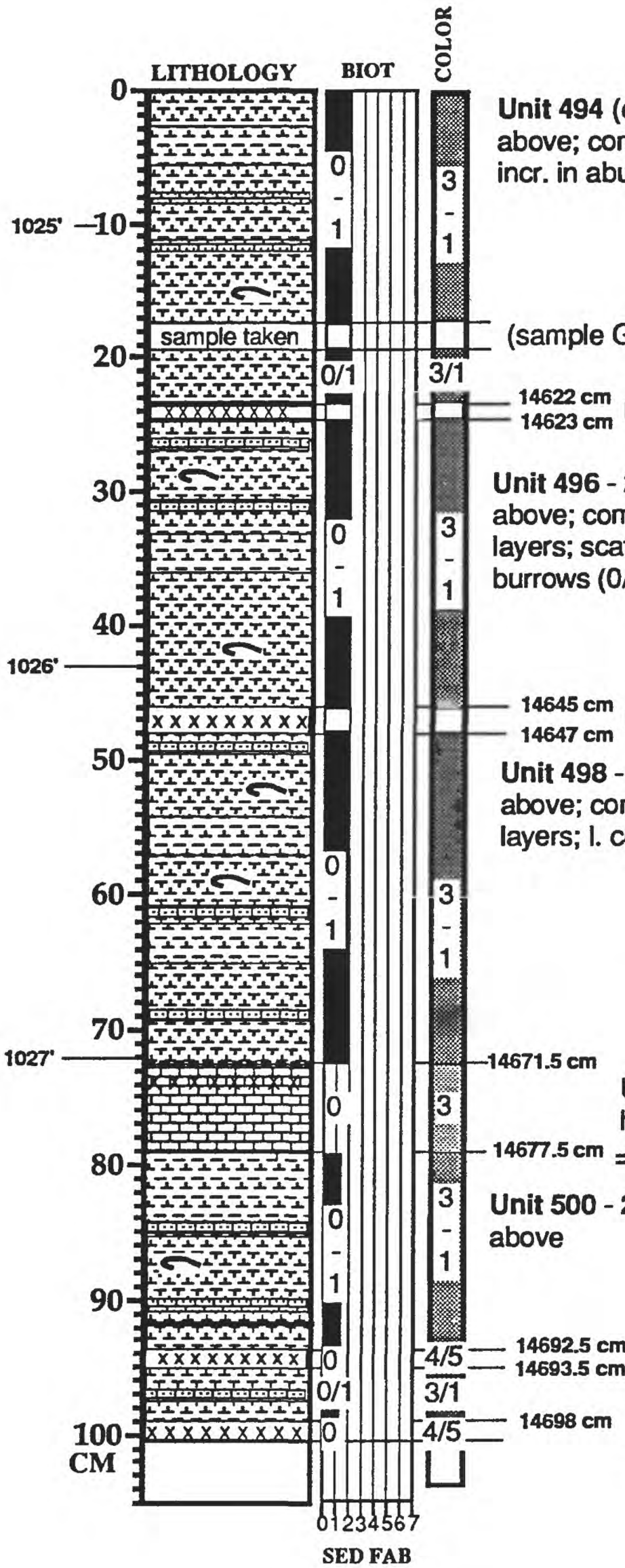

Unit 494 (cont.) - MARLSTONE to CALC. CLAYSTONE as above; common to abund. 0.5-mm CALCARENITE layers; incr. in abund. of facal pel. downward; l. contact sharp

(sample GH43 of Lewan)

Unit 495 - 1 cm; BENTONITE; contacts sharp

Unit 496 - 22 cm; MARLSTONE to CALC. CLAYSTONE as above; common to abund. CALCARENITE laminae and layers; scattered Ino. frag.; well lamin. (1/2) w/ a few discrete burrows (0/1); ol. gry. to lt. ol. blk. (3/1); l. contact sharp

Unit 497 - 2 cm; BENTONITE; contacts sharp

Unit 498 - 24.5 cm; MARLSTONE to CALC. CLAYSTONE as above; common to abund. CALCARENITE laminae and layers; l. contact grad. over 2 cm

BOTTOM, HARTLAND SH. MBR., GREENHORN FM.

Unit 499 - 6 cm; LIMESTONE w/ 3-mm BENTONITE; homog. (0) w/ no ichnotaxa (0); lt. ol. gry. (3)
=TOP, LINCOLN SH. MBR., GREENHORN FM.

Unit 500 - 24.5 cm; MARLSTONE to CALC. CLAYSTONE as above

Unit 501 - 1 cm; BENTONITE
Unit 502 - 4.5 cm; MARLSTONE to CALC. CLAYSTONE similar to above marlstone units
Unit 503 - 4.5 cm; BENTONITE

MAA/WED/BBS - 6/92

CORE: AMOCO Rebecca K
Bounds #1

BOX #50a
BOX FOOTAGE 1027-1038

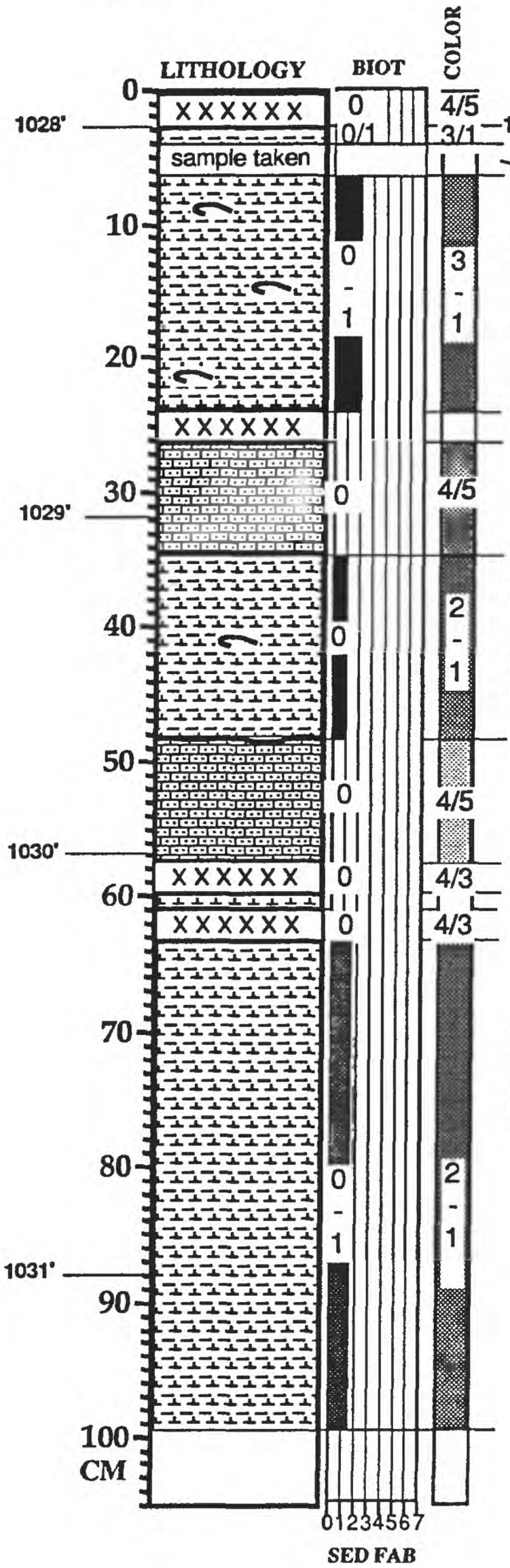

Unit 503 (cont.) - BENTONITE; (as above); l. contact sharp

14702.5 cm **Unit 504** - CALC. SHALE (see below)

(sample GH44 of Lewan)

Unit 504 (cont.) - 20.5 cm (including sample interval); CALC. SHALE; common fecal pel.; scattered Ino. frag.; well to poor. lamin. (1 to 3) w/ no ichnotaxa (0/1); ol. gry. to blk. (3/1) w/ some v. lt. gry. layers rich in fecal pel.; l. contact sharp

14723 cm

14724.5 cm **Unit 505** - 1.5 cm; BENTONITE; l. contact sharp

Unit 506 - 10 cm; v. fine gr. CALCARENITE or CALCISILTITE; abund. small plank. forams; homogen. (0) w/ no ichnotaxa (0); lt. gry. to ol. blk. (4/5); l. contact sharp

14734.5 cm

Unit 507 - 13.5 cm; MARLSTONE to CALC. MUDSTONE; some scattered Ino. frag; well lamin. w/ some homo. layers (1/0); no ichnotaxa (0); speckled ol. gry. to ol. blk. (2/1); l. contact sharp but erosional w/ clasts, fish debris, and Ino. frag.

14748 cm **Unit 508** - 10 cm; CALCARENITE banded in lower 2 cm. w/ dark CLAYSTONE; abund. fecal pel. and small plank. forams; homogen. (0) w/ no ichnotaxa (0); lt. gry. to ol. blk. (4/5); l. contact sharp

14758 cm **Unit 509** - 2 cm; BENTONITE; l. contact sharp

14760 cm

14760.5 cm **Unit 510** - 0.5 cm; CALC. MUDSTONE like Unit 512 below

14763 cm **Unit 511** - 2.5 cm; BENTONITE; l. contact sharp

Unit 512 - 197 cm; CALC. MUDSTONE; v. rare shell frag; well lamin. w/ concentrations of fecal pel. and plank. forams in laminae (1/2); some homog. layers; no ichnotaxa (0/1); ol. blk. to ol. gry. (2/1)

MAA/WED/BBS - 6/92

CORE: AMOCO Rebecca K
Bounds #1

BOX # 50b
BOX FOOTAGE 1027-1038

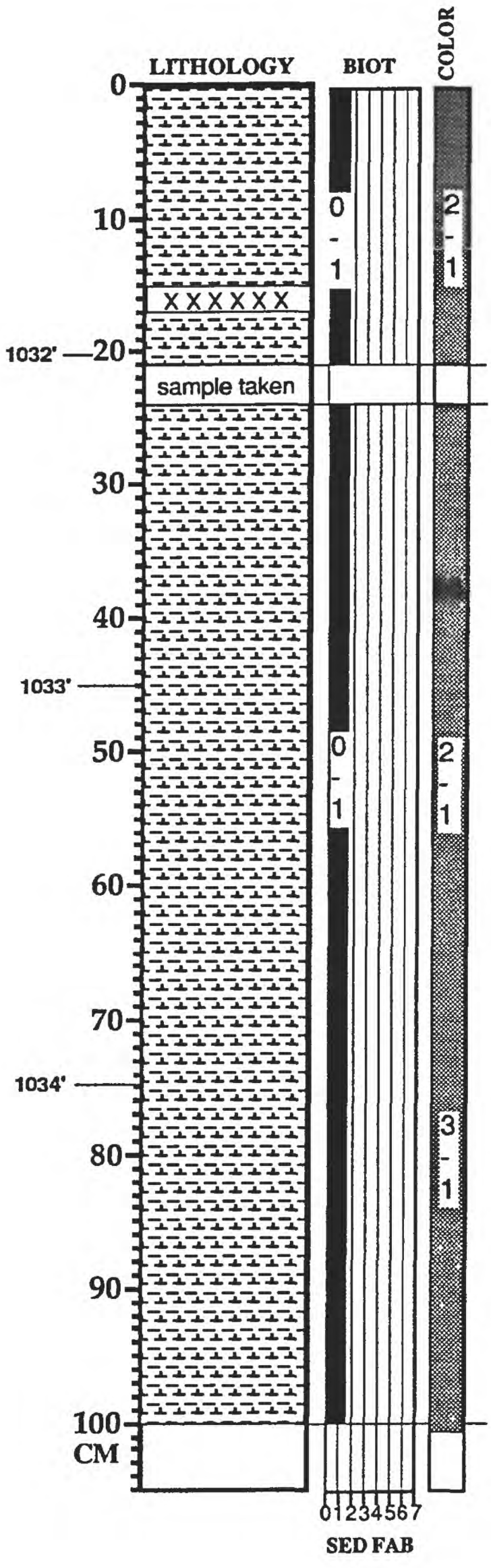

Unit 512 (cont.)- CALCAREOUS MUDSTONE as above

bentonitic claystone

(sample GH45 of Lewan)

abundance of laminae decreases ↓

MAA/WED/BBS - 6/92

CORE: AMOCO Rebecca K
Bounds #1

BOX # 50c
BOX FOOTAGE 1027-1038

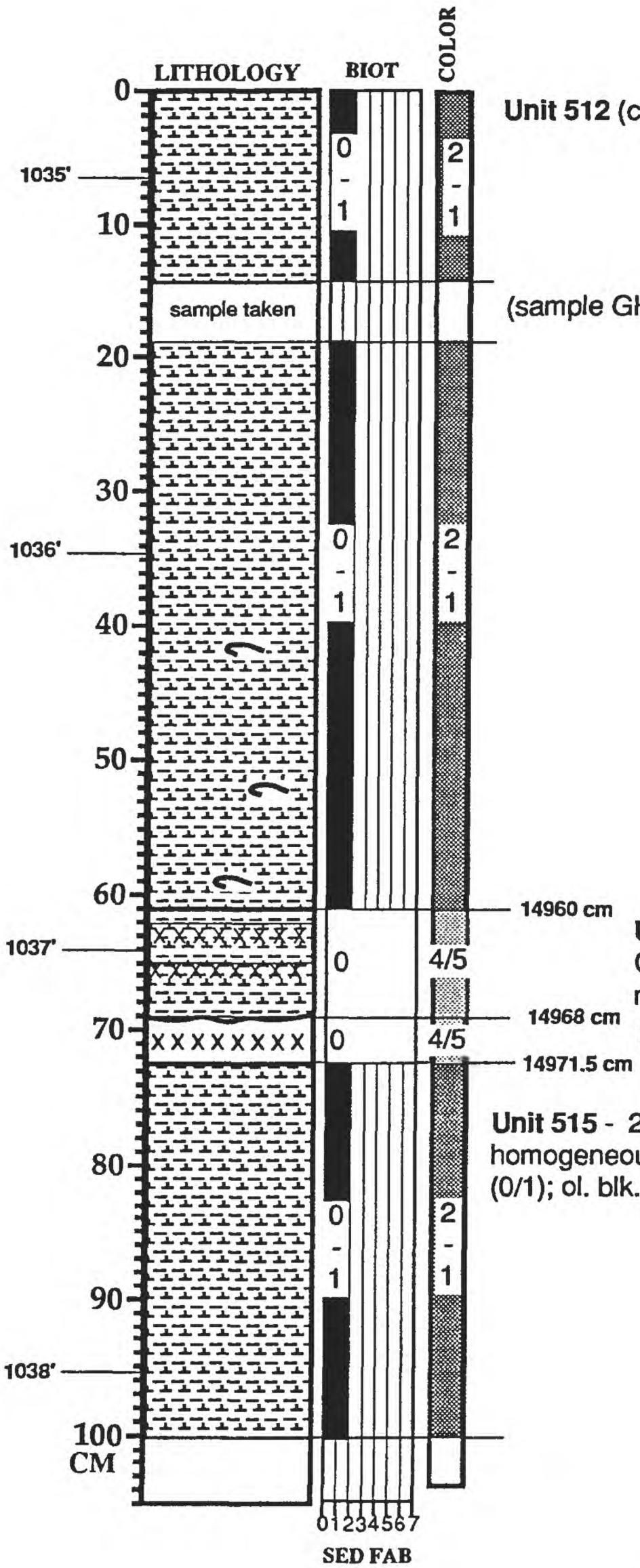

Unit 512 (cont.)- CALCAREOUS MUDSTONE as above

(sample GH46 of Lewan)

Unit 513 - 8 cm; BENTONITIC CALC. CLAYSTONE; homog (0) w/ no ichnotaxa (0); med. lt gry (4/5); l. contact sharp but undulating

Unit 514 - 3.5 cm; BENTONITE

Unit 515 - 262.5 cm; CALCAREOUS MUDSTONE; homogeneous to a few thin laminae (0/3) w/ no ichnotaxa (0/1); ol. blk. to dk. ol. gray (2/1)

MAA/WED/BBS - 6/92

CORE: AMOCO Rebecca K
Bounds #1

BOX #51a
BOX FOOTAGE 1038-1048

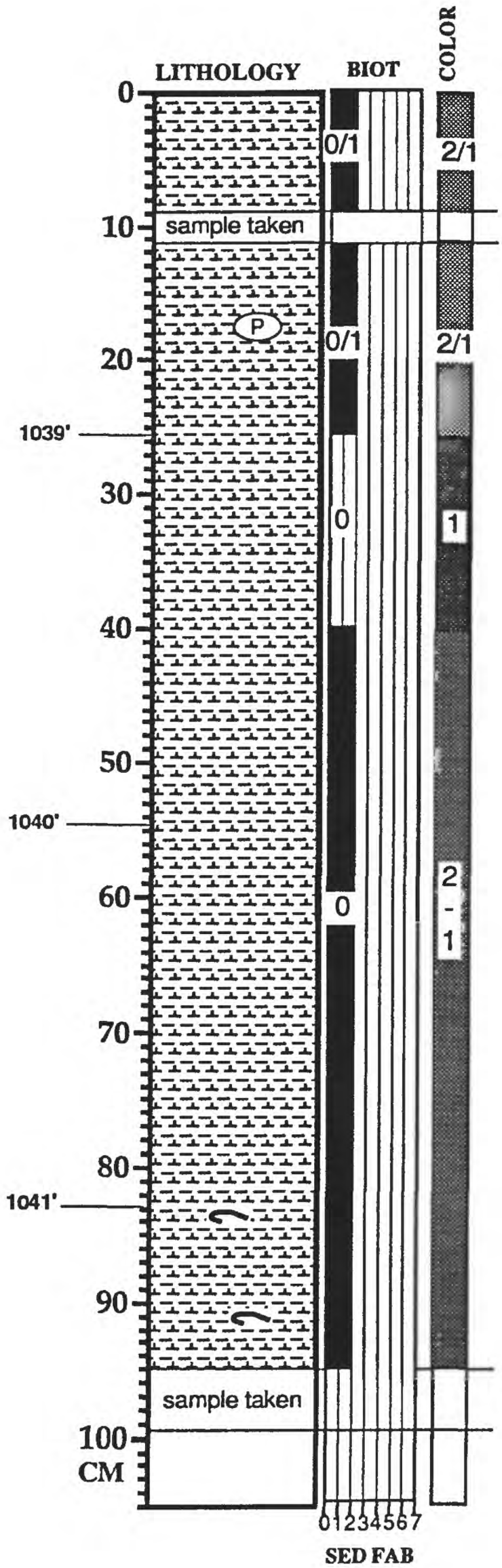

Unit 515 (cont.)- CALCAREOUS MUDSTONE as above rare Ino. frag; scattered lamin. w/ concentrations of fecal pel. and plank. forams some homog. layers (0-3); no ichnotaxa (0/1); ol. blk. to ol. gry. (2/1)

(sample GH47 of Lewan)

(phosphate? nodule)

(sample GH48 of Lewan)

MAA/WED/BBS - 6/92

CORE: AMOCO Rebecca K
Bounds #1

BOX # 51b
BOX FOOTAGE 1038-1048

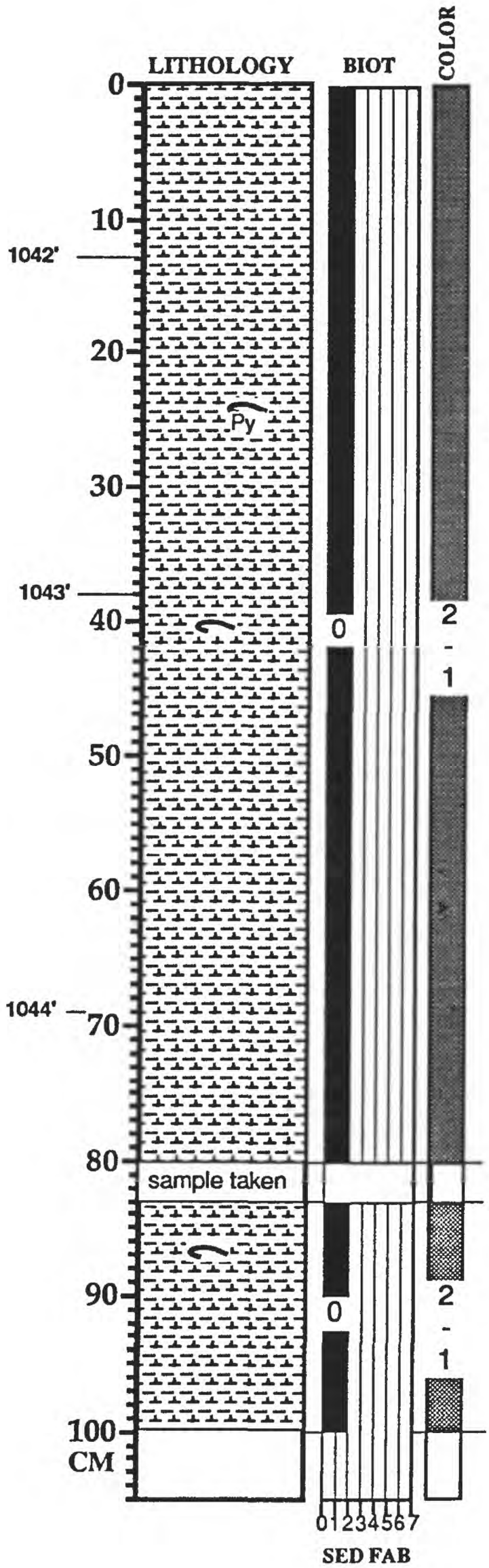

Unit 515 (cont.)- CALCAREOUS MUDSTONE as above rare Ino. frag; less common lamin. w/ concentrations of fecal pel.

pyritized Ino. frag.

(sample GH49 of Lewan)

MAA/WED/BBS - 6/92

CORE: AMOCO Rebecca K
Bounds #1

BOX # 51c
BOX FOOTAGE 1038-1048

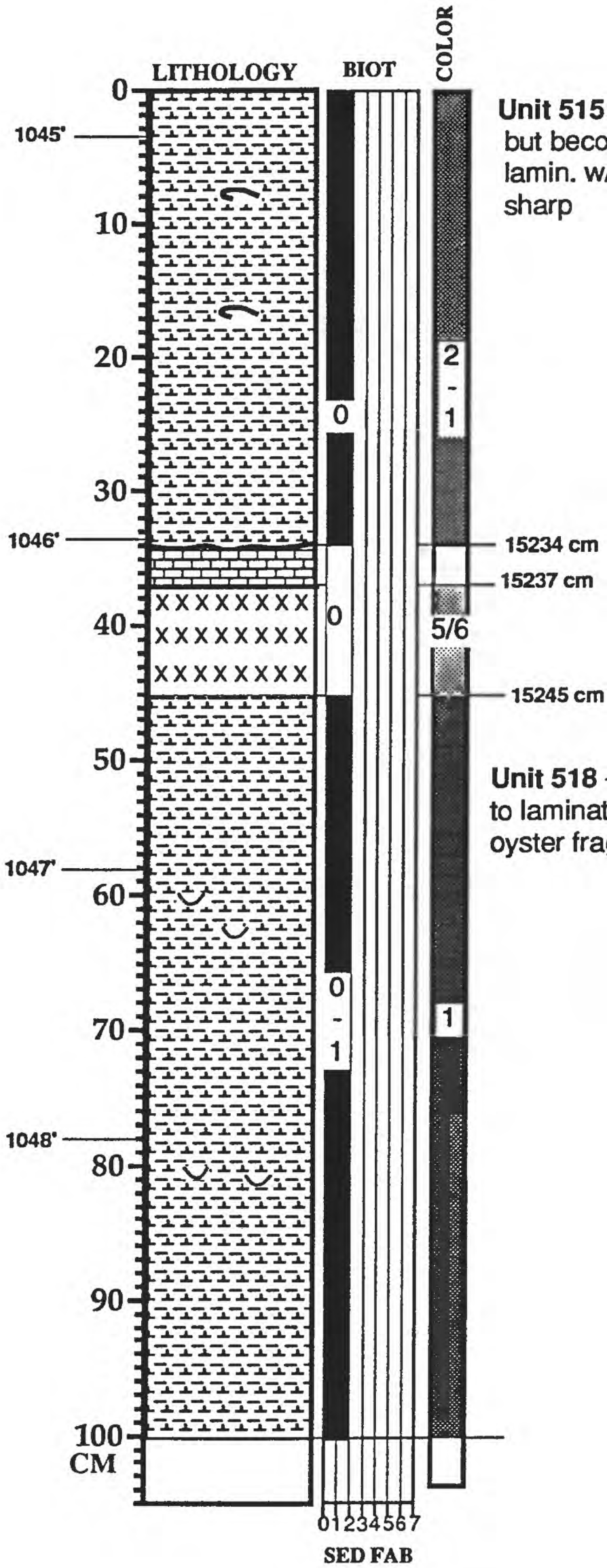

Unit 515 (cont.)- CALCAREOUS MUDSTONE as above but becomming less calcareous; rare oyster & Ino. frag; rare lamin. w/ concentrations of fecal pel.; l. contact irreg. but sharp

BOTTOM, LINCOLN LS. MBR., GREENHORN FM.

Unit 516 - 3 cm; Ostrea CALC. CONCRETION layer
Unit 517 - 8 cm; BENTONITE ("X" bentonite); homog. (0) w/ no ichnotaxa (0); lt. gry. to white (5/6) w/ yel. stain; l. contact grad. over 0.5 cm

TOP, GRANEROS SH.

Unit 518 - 118 cm; CALCAREOUS MUDSTONE; homogen. to laminated (0/3); no ichnofauna (0); ol. blk. (1); scattered oyster frag.

MAA/WED/BBS - 6/92

CORE: AMOCO Rebecca K
Bounds #1

BOX #52a
BOX FOOTAGE 1048-1065

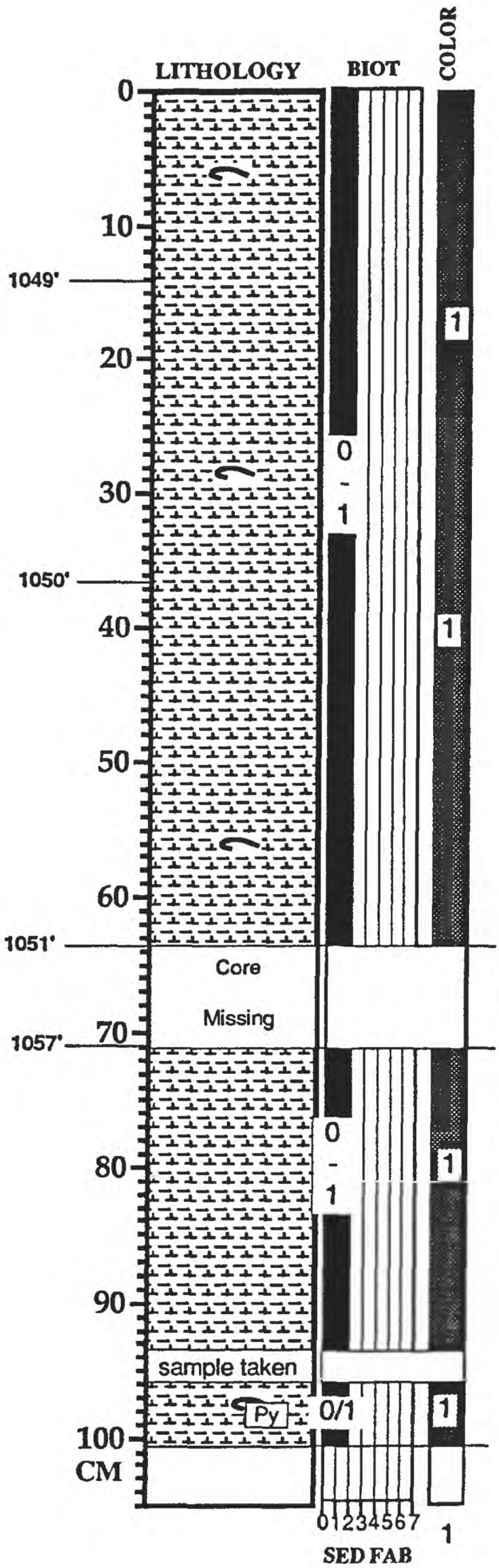

Unit 518 (cont.)- CALCAREOUS MUDSTONE as above rare, scattered Ino. frag; rare fecal pel. and plank. forams

(arbitrary end of unit)

15363 cm

Unit 519 - 6 ft. missing core; assumed to be CALCAREOUS MUDSTONE as above and below

15830 cm

Unit 520 - 467 cm; CALCAREOUS MUDSTONE similar to Unit 518; homog. to lamin. (0/3) w/ no ichnotaxa (0/1); ol. blk. (1)

(pyritized Ino. frag.)

MAA/WED/BBS - 6/92

CORE: AMOCO Rebecca K
Bounds #1

BOX # 52b
BOX FOOTAGE 1048-1065

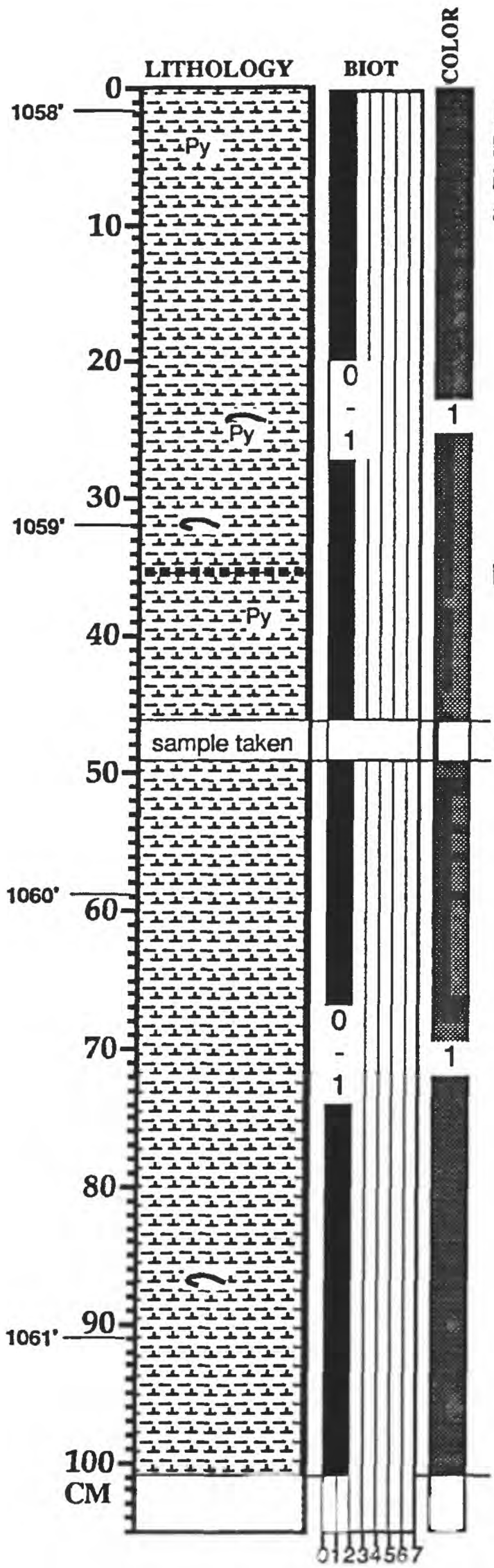

Unit 520 (cont.)- CALCAREOUS MUDSTONE as above; homog. to poorly lamin. (0/3) w/ no visible burrows (0/1); ol. blk. (1); Inos. prob. in growth position; scattered Ino. frags. and pyrite blebs; v. rare lt. colored laminae

limonitic, bentonitic seam (1-3 mm)

(sample GH51 of Lewan)

MAA/WED/BBS - 6/92

CORE: AMOCO Rebecca K
Bounds #1

BOX # 52c
BOX FOOTAGE 1048-1065

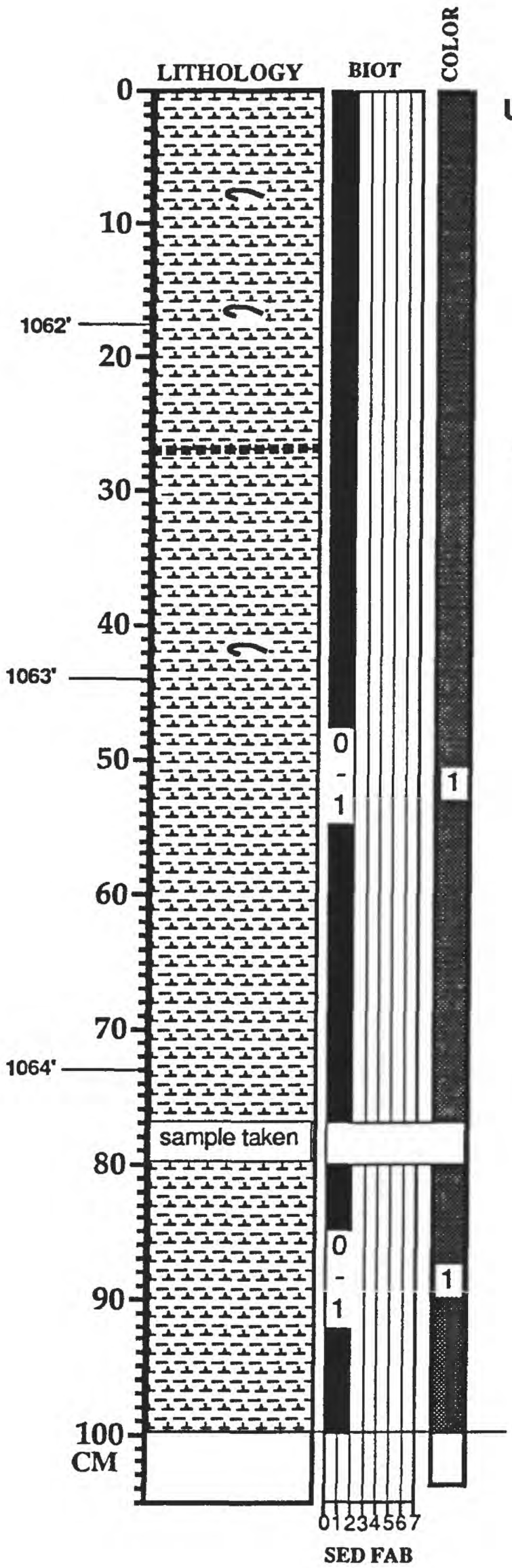

Unit 520 (cont.)- CALCAREOUS MUDSTONE as above

0.5 cm BENTONITE (lt. gry. w/ limonitic stain)

MAA/WED/BBS - 6/92

CORE: AMOCO Rebecca K
Bounds #1

BOX #53a
BOX FOOTAGE 1065-1075

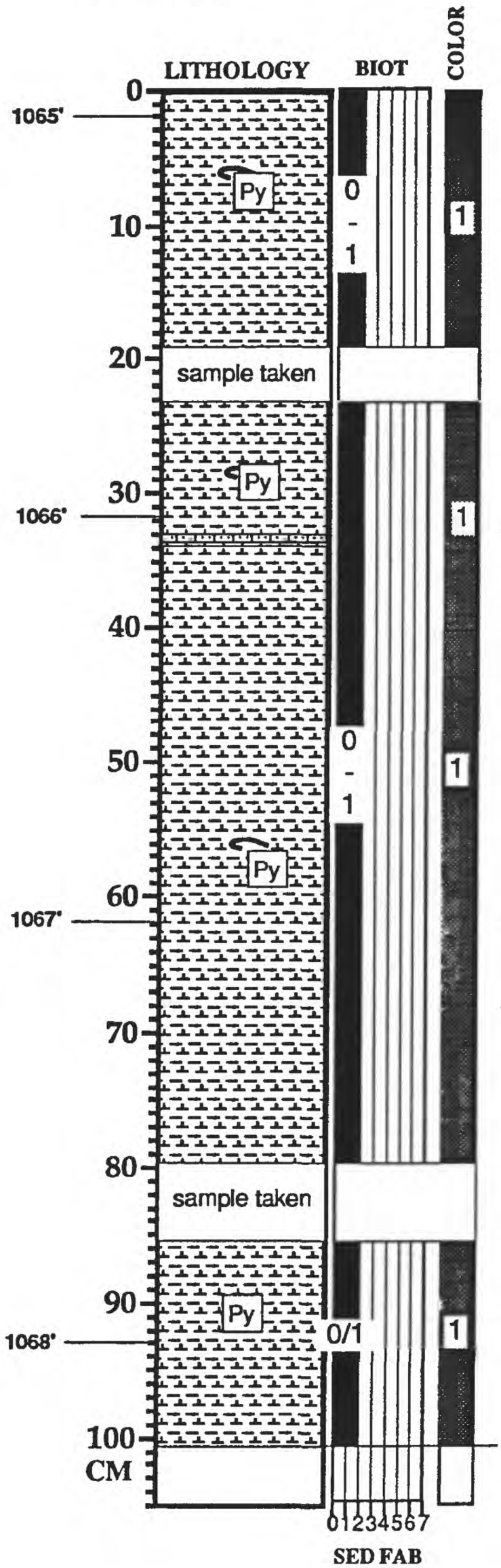

Unit 520 (cont.)- CALCAREOUS MUDSTONE as above rare, scattered pyritized shell frag.

(sample GH52 of Lewan)

thin, lt. colored calcarenite lenses

(core disturbed)

MAA/WED/BBS - 6/92

CORE: AMOCO Rebecca K
Bounds #1

BOX # 53b
BOX FOOTAGE 1065-1075

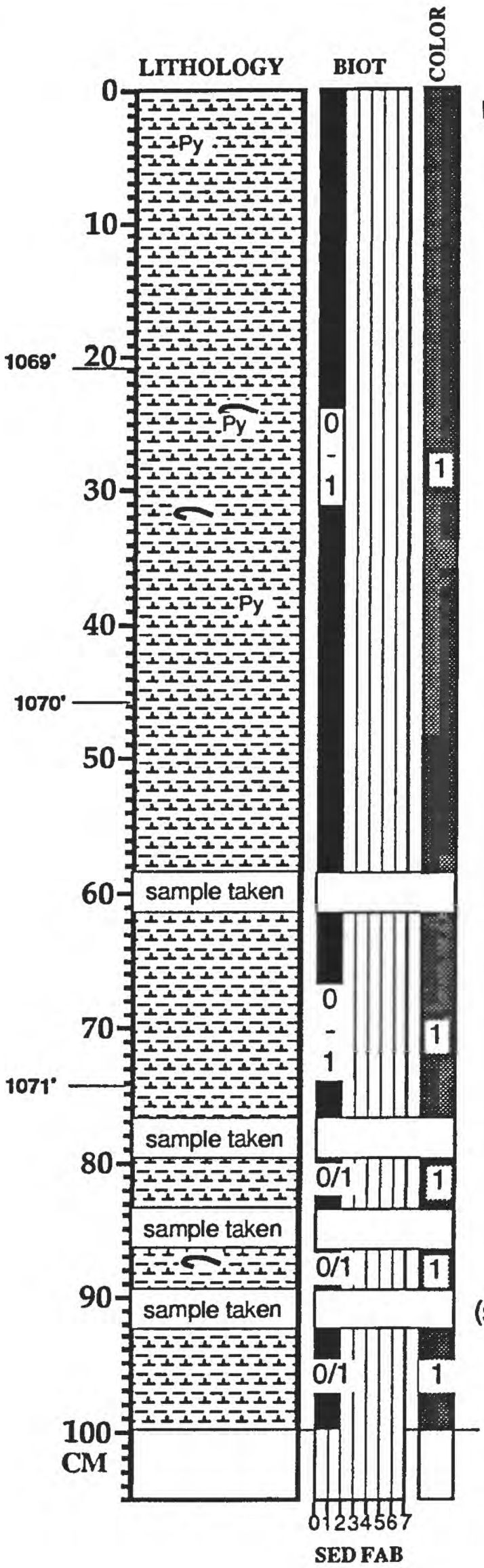

Unit 520 (cont.)- CALCAREOUS MUDSTONE as above

(sample GH53 of Lewan)

transitional to claystone w/o carbonate

MAA/WED/BBS - 6/92

CORE: AMOCO Rebecca K
Bounds #1

BOX # 53c
BOX FOOTAGE 1065-1075

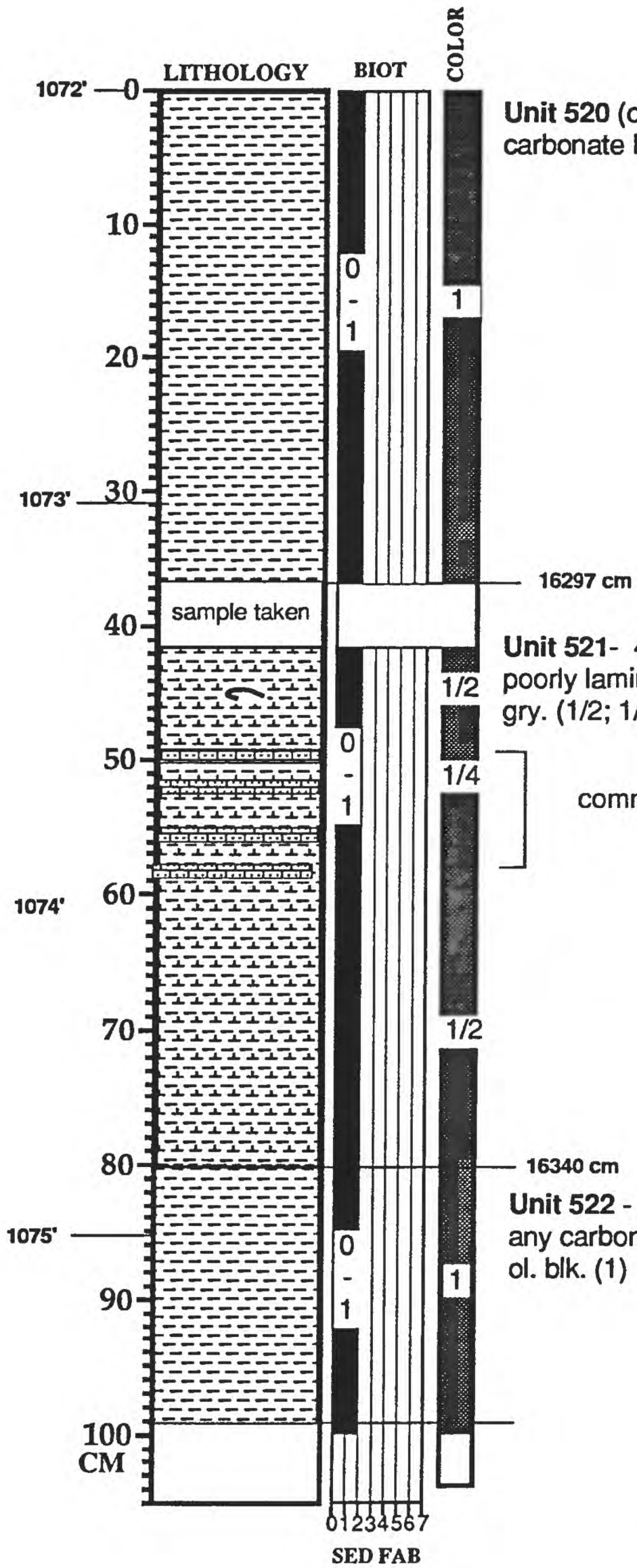

Unit 520 (cont.)- MUDSTONE or CLAYSTONE w/ little if any carbonate but otherwise as above

Unit 521- 43 cm; CALCAREOUS CLAYSTONE; well to poorly lamin. (1/3) w/ no visible burrows (0/1); ol. blk. to ol. gry. (1/2; 1/4); l. contact grad. over 10 cm

common white calcarenite laminae

Unit 522 - 118.5 cm; MUDSTONE or CLAYSTONE w/ little if any carbonate; rare laminae (0/3) but no visible burrows (0/1); ol. blk. (1)

MAA/WED/BBS - 6/92

CORE: AMOCO Rebecca K
Bounds #1

BOX #54a
BOX FOOTAGE 1075-1085

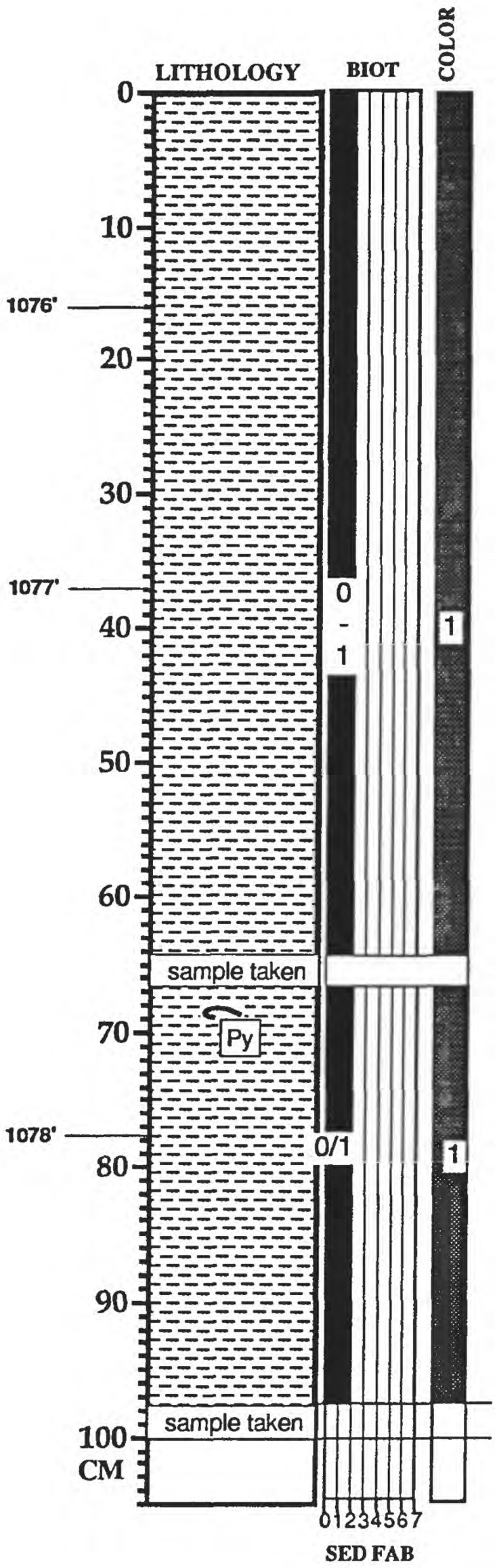

Unit 522 (cont.)- CALCAREOUS CLAYSTONE as above rare lamin.; rare, scattered pyritized shell frag.

(sample GH54 of Lewan)

pyritized shell frags. or possible burrows

MAA/WED/BBS - 6/92

CORE: AMOCO Rebecca K
Bounds #1

BOX # 54b
BOX FOOTAGE 1075-1085

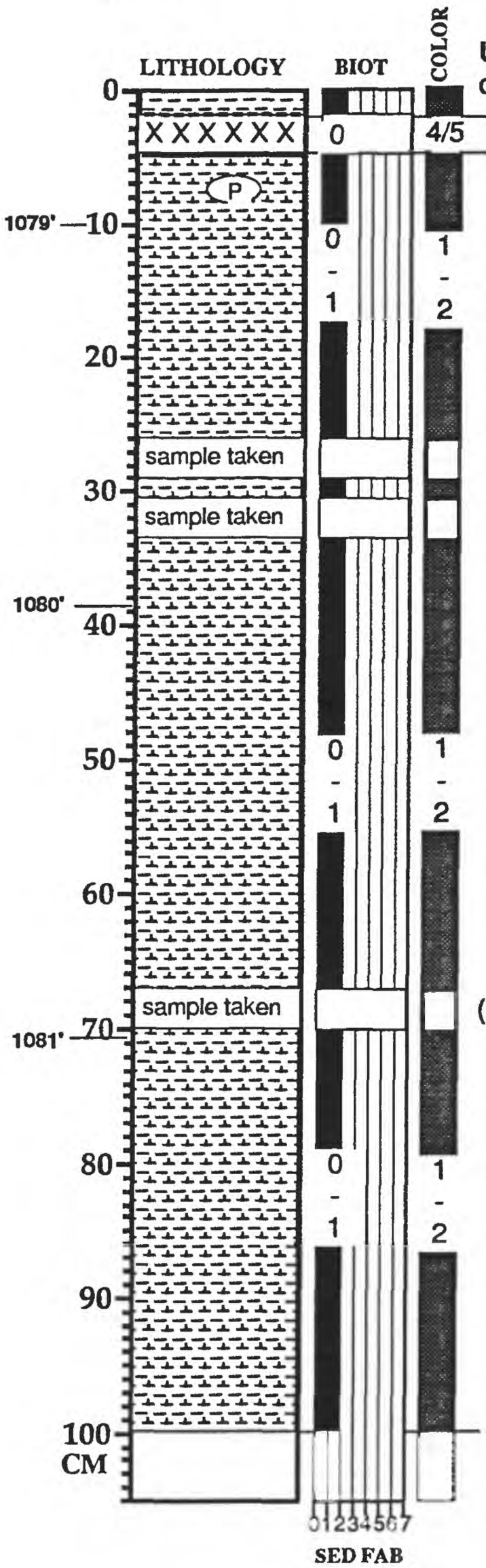

Unit 522 (cont.)- CALCAREOUS CLAYSTONE as above; l. contact grad. over 0.5 cm

16458.5 cm **Unit 523**- 2 cm; BENTONITE; lt. gry. to v. lt. gry
16460.5 cm (4/5) w/ greenish streaks; l. contact sharp
phosphate nodule

Unit 524- 139 cm; CLAYSTONE to slightly CALCAREOUS CLAYSTONE (dominant); well to poor. lamin (1/3) w/ no visible burrows (0/1); ol. blk. to ol. gry (1/2)

(sample GH55 of Lewan)

carbonate laminae becom. more abund.

MAA/WED/BBS - 6/92

CORE: AMOCO Rebecca K
Bounds #1

BOX # 54c
BOX FOOTAGE 1075-1085

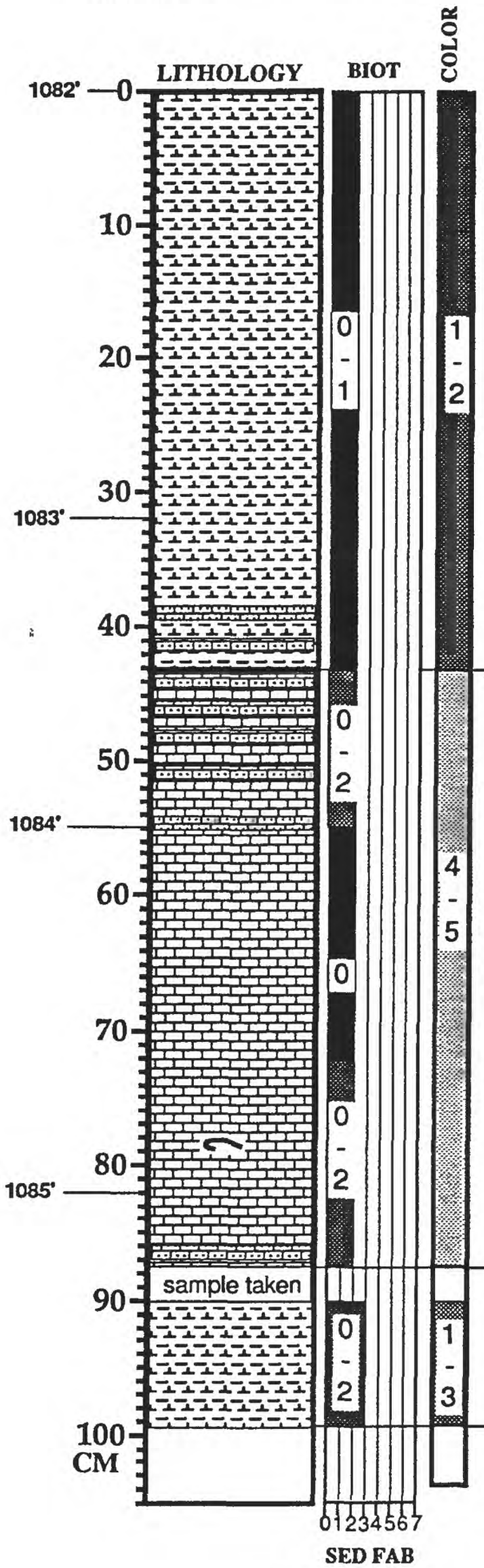

Unit 524 (cont.) - CALCAREOUS CLAYSTONE; lt.-colored carbonate laminae increase downward forming calcarenite laminae and lenses (some recognizable foram tests, fecal pel., and shell debris, but composition of most grains unrecogniz.); ol. blk. to ol. gry (1/2); l. contact sharp

common lt. ol. gry. to ol. gry. calcarenite bands

THATCHER LS. MBR., GRANEROS SH.

Unit 525- 44.5 cm; LIMESTONE (Thatcher Limestone Mbr., Graneros Sh.); irreg. lamin. to banded (0/3); some small horizontal burrows, but most w/ no visible burrows (0/2); lt. gry. to v. lt. gry (4/5)

common Ino. frags.

calcarenite bands

Unit 526 - 21.5 cm; CALCAREOUS CLAYSTONE; mod. lamin to sli. bioturb. (2/5); some burrows (0/2); ol. gry. to lt. ol. gry. (1/3)

MAA/WED/BBS - 6/92

CORE: AMOCO Rebecca K
Bounds #1

BOX #55a
BOX FOOTAGE 1085-1095

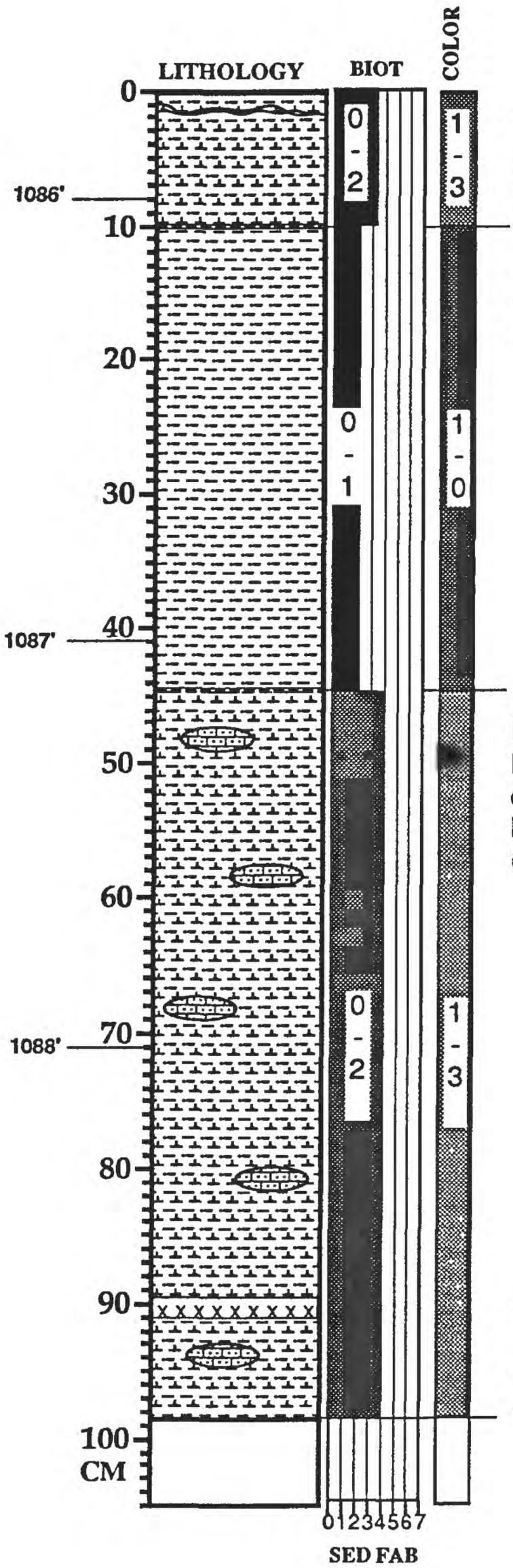

planar to ripple x-lamin.

Unit 526 (cont.) - CALCAREOUS CLAYSTONE as above; l. cont. grad. over 2 cm

Unit 527 - 34.5 cm; CLAYSTONE; lt. colored laminae diminish from top to 18 cm, then rare below that; ol. blk. to brownish blk. (1/0); l. cont. grad. over 0.5 cm

Unit 528 - 54 cm; CALCAREOUS CLAYSTONE to MARLSTONE; silty; abund. lenses of CALCARENITE w/ quartz silt; poor. lamin. to sli. bioturb. (3/5); highly irreg. bedding and lamin.; common bioturb (0/2); ol. blk. to ol. gry. (1/3); l. cont. sharp

0.5 cm limonitic stained BENTONITE layer; burrowed

decreasing number of calcarenite laminae ↓

MAA/WED/BBS - 6/92

CORE: AMOCO Rebecca K
Bounds #1

BOX # 55b
BOX FOOTAGE 1085-1095

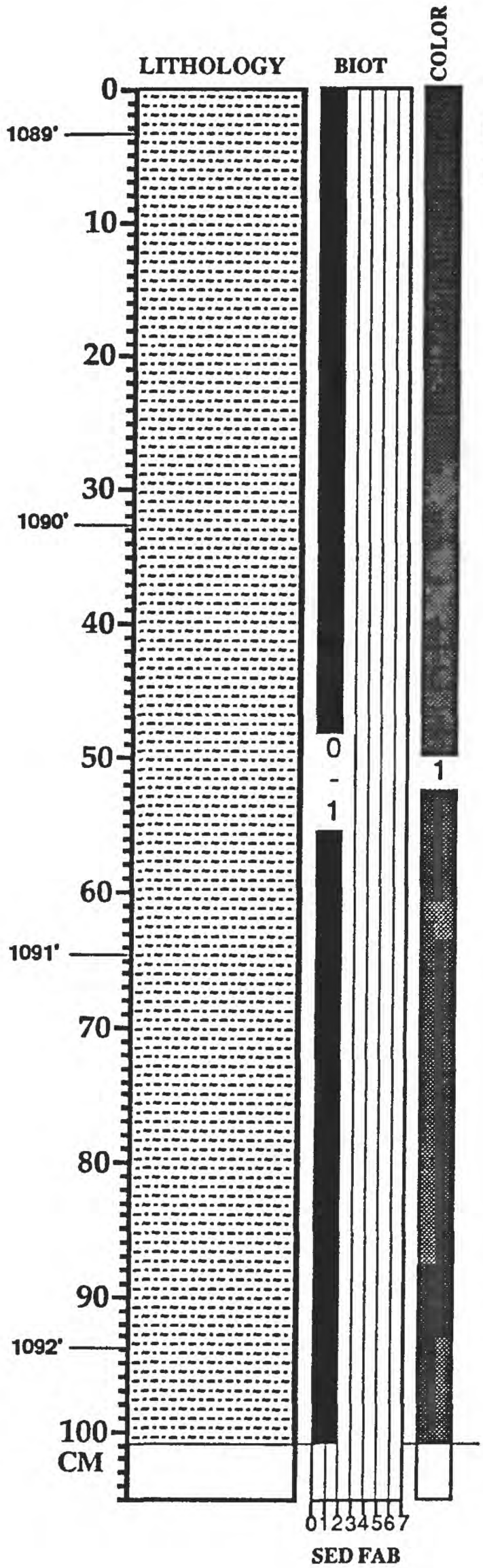

Unit 529 - 118 cm; MUDSTONE; noncalcareous; homog. to poorly lamin (0/3); no visible burrows (0/1); ol. blk. (1)

more common lenses and laminae of quartz silt

MAA/WED/BBS - 6/92

CORE: AMOCO Rebecca K
Bounds #1

BOX # 55c
BOX FOOTAGE 1085-1095

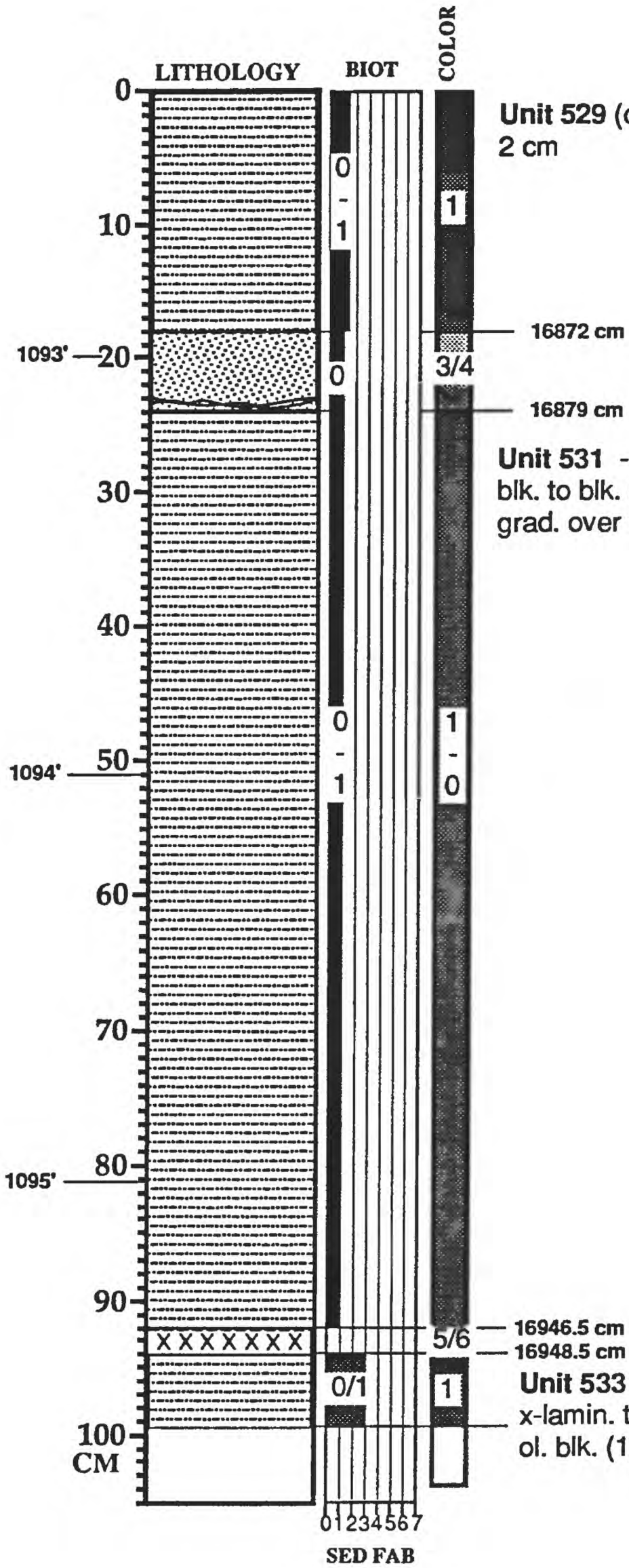

Unit 529 (cont.) - MUDSTONE; as above; l. contact grad. over 2 cm

Unit 530 - 7 cm; quartz SANDSTONE; homo. to ripple x-lamin. at base; no burrows (0); ol. gry. to lt. ol. gry. (3/4); l. contact sharp but slightly irreg.

Unit 531 - 67.5 cm; MUDSTONE; no visible burrows (o/1); ol. blk. to blk. (1/0) w/ a few lt. colored silt laminae; l. contact grad. over 1 cm

Unit 532 - 2 cm; BENTONITE; v. lt. gry. to white

Unit 533 - 12.5 cm; MUDSTONE w/ abund. silt lenses; ripple x-lamin. to irreg. bedded (0/5); some burrowing in silt layers; ol. blk. (1)

MAA/WED/BBS - 6/92

CORE: AMOCO Rebecca K
Bounds #1

BOX #56a
BOX FOOTAGE 1095-1105

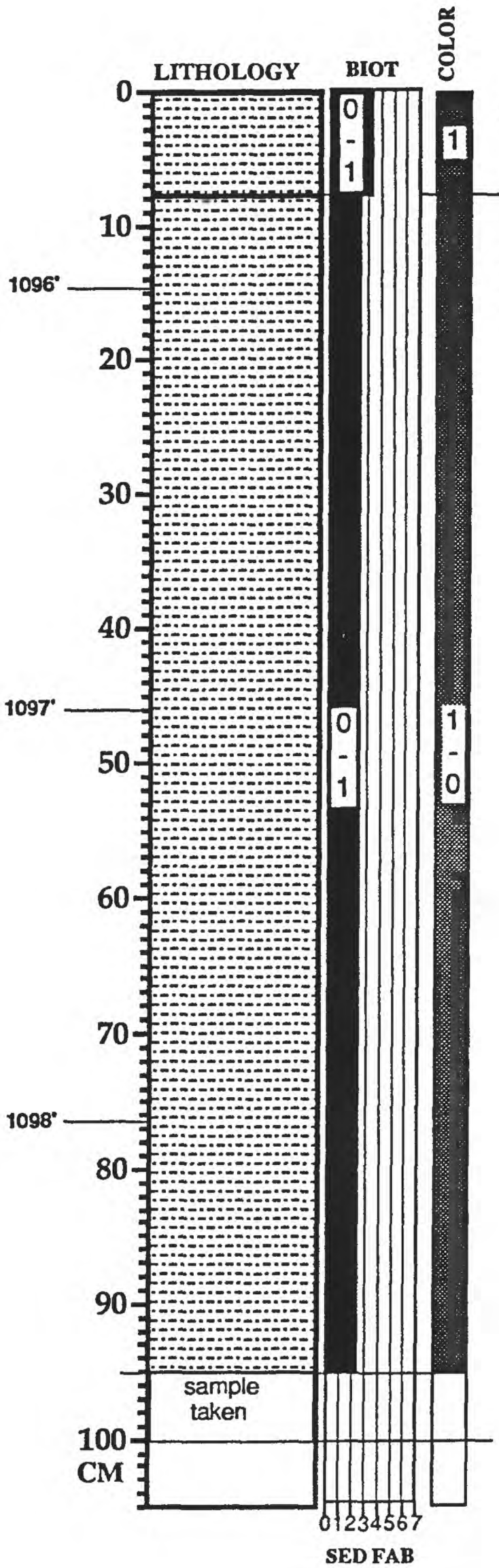

Unit 533 (cont.) - MUDSTONE as above; l. cont. sharp

16961 cm

Unit 534 - 291 cm; MUDSTONE; much less silty than above; faintly lamin. (2/3) w/ no visible burrows (0/1); ol. blk. to blk. (1/0)

MAA/WED/BBS - 6/92

CORE: AMOCO Rebecca K
Bounds #1

BOX # 56b
BOX FOOTAGE 1095-1105

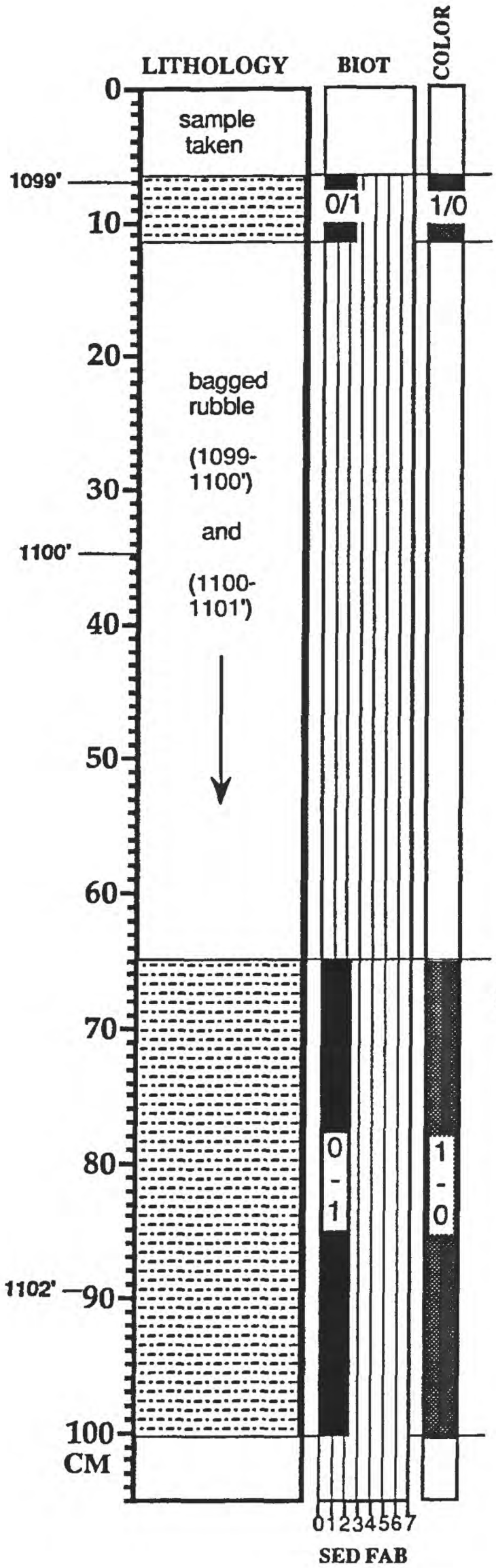

Unit 534 (cont) - MUDSTONE as above

Unit 534 (cont) - MUDSTONE as above

MAA/WED/BBS - 6/92

CORE: AMOCO Rebecca K
Bounds #1

BOX # 56c
BOX FOOTAGE 1095-1105

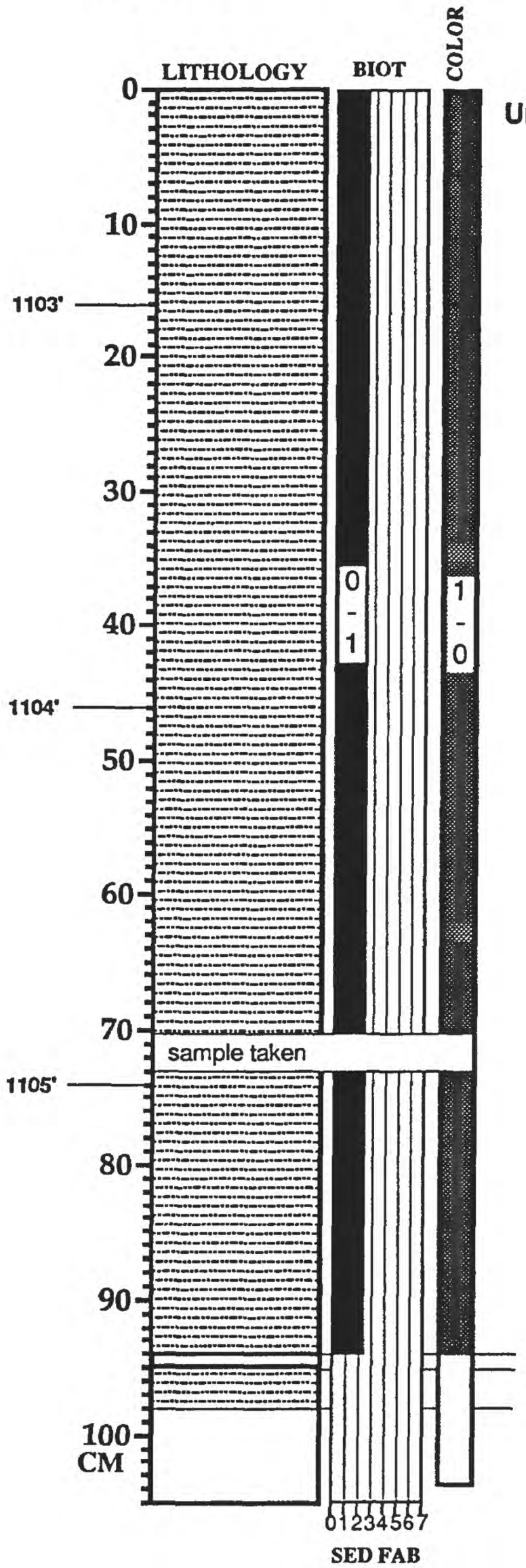

Unit 534 (cont.) - MUDSTONE as above

17252 cm
17253 cm

Unit 535 - 1 cm; BENTONITE; yel. brown; sharp contacts

Unit 536 - 4 cm; MUDSTONE simlar to Unit 534

MAA/WED/BBS - 6/92

CORE: AMOCO Rebecca K
Bounds #1

BOX #57a
BOX FOOTAGE 1105-1116

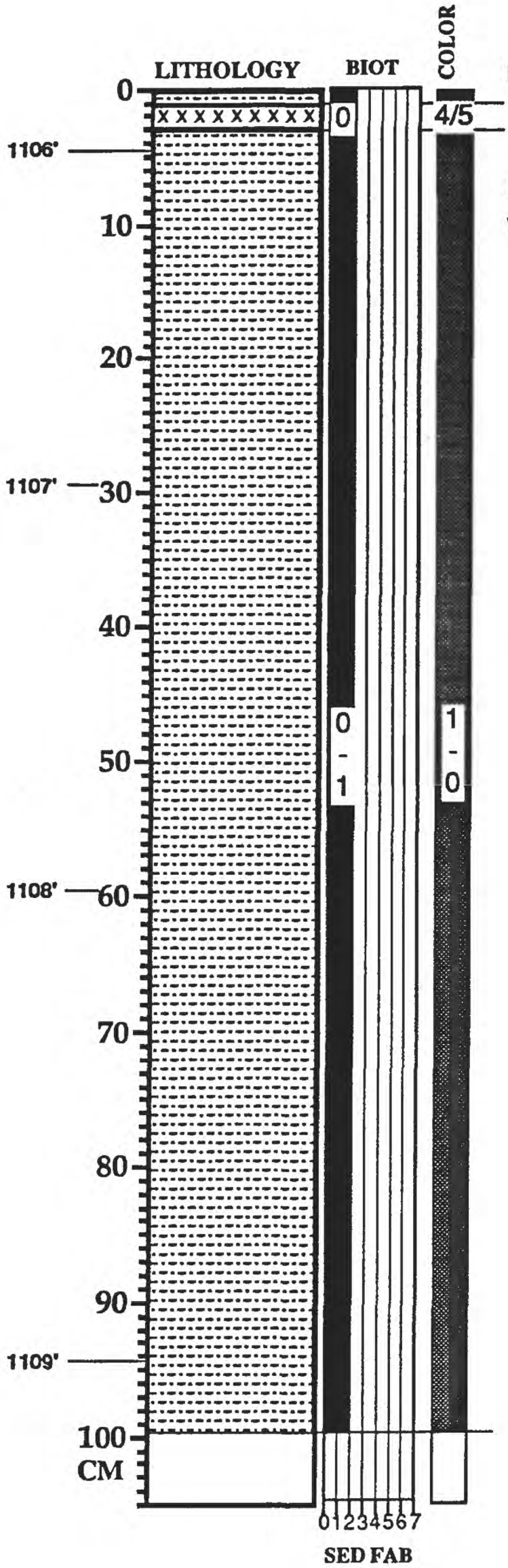

Unit 536 (cont.) - MUDSTONE as above; l. cont. sharp

Unit 537 - 2 cm; BENTONITE; lt. gry. to med. lt. gry. (4/5); l. cont. sharp

Unit 538 - 205.5 cm; MUDSTONE; rare, v. thin, silty lamin. (2) w/ no visible burrows (0/1); ol. blk. to blk. (1/0)

MAA/WED/BBS - 6/92

CORE: AMOCO Rebecca K
Bounds #1

BOX # 57b
BOX FOOTAGE 1105-1116

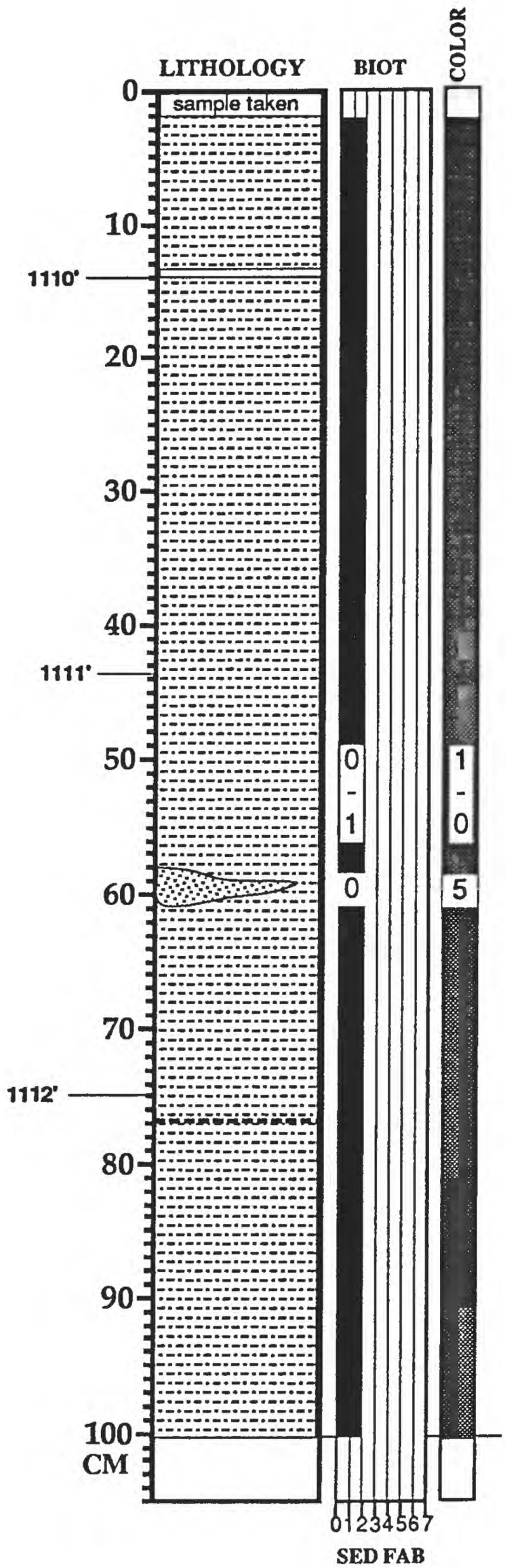

Unit 538 (cont) - MUDSTONE as above

v. lt. gry BENTONITE seam

lens of fine. gr., v. lt. gry. (5) SANDSTONE

thin, med. gry. BENTONITE stringer

MAA/WED/BBS - 6/92

CORE: AMOCO Rebecca K
Bounds #1

BOX # 57c
BOX FOOTAGE 1105-1116

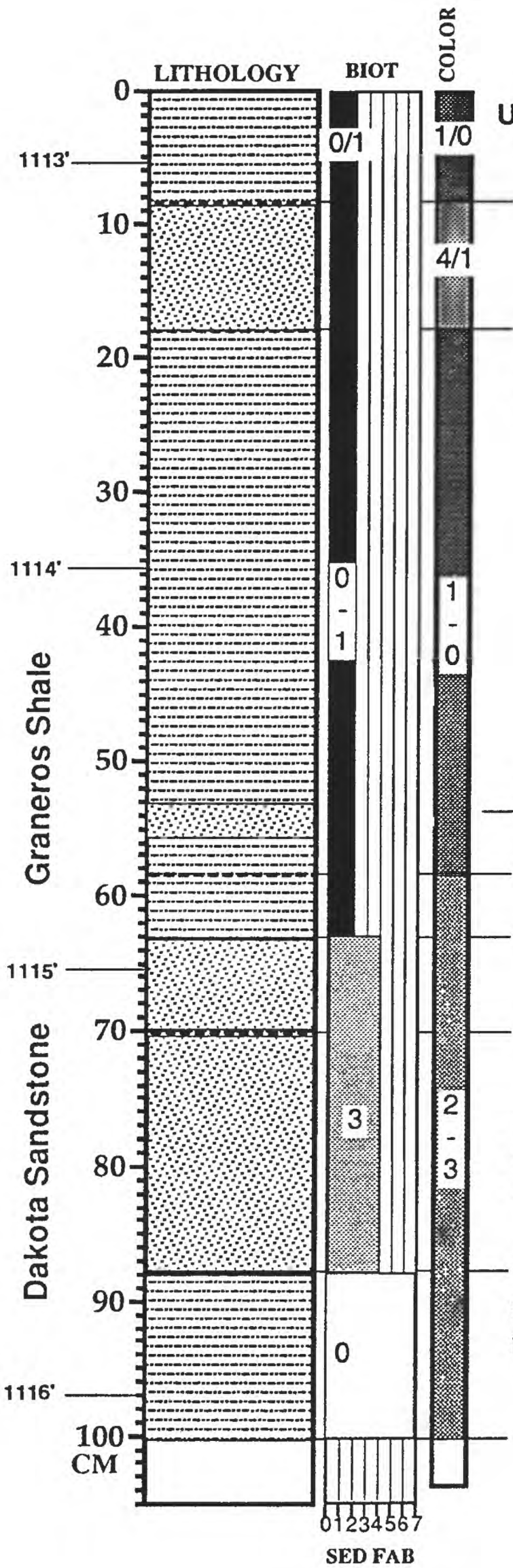

Unit 538 (cont.) - MUDSTONE as above

17464.5 cm

Unit 539 - 9 cm; SILTSTONE/ FINE SANDSTONE; fine gr.; mod. lamin. (2); lt. brn. gry. to lt. gry. to brn. blk. (4/1); l. contact grad. over 1 cm

17473.5 cm

Unit 540 - 41 cm; MUDSTONE similar to unit 538; l. contact grad. over 1 cm

fine-gr., v. lt. gry. SANDSTONE lens w/ some distinct horizontal burrows

17514.5 cm **Unit 541** - 4.5 cm; MUDSTONE; mod. lamin (2) w/ no visible burrows (0/1); med. dk. gry. to brn. gry. (2/3); l. contact sharp **Bottom.Graneros Shale/Top Dakota Sandstone**

17519 cm

17526 cm **Unit 542** - 7 cm; SILTSTONE; sli. bioturb. (3/5) w/ large burrows (3); med. dk. gry. to brn. gry. (2/3); l. contact grad. over 1 cm

Unit 543 - 17.5 cm; SANDSTONE; fine gr. w/ a few muddy stringers; sli. bioturb. (3/5) w/ large burrows (3); lt. blu. gry. to med. lt. gry. (2/3); l. contact sharp

17543.5 cm

Unit 544 - 35 cm; MUDSTONE; homog. (0) w/ occas. sand filled burrows; med. lt gry. (2/3)

MAA/WED/BBS - 6/92

CORE: AMOCO Rebecca K
Bounds #1

BOX #58a
BOX FOOTAGE 1116-1126

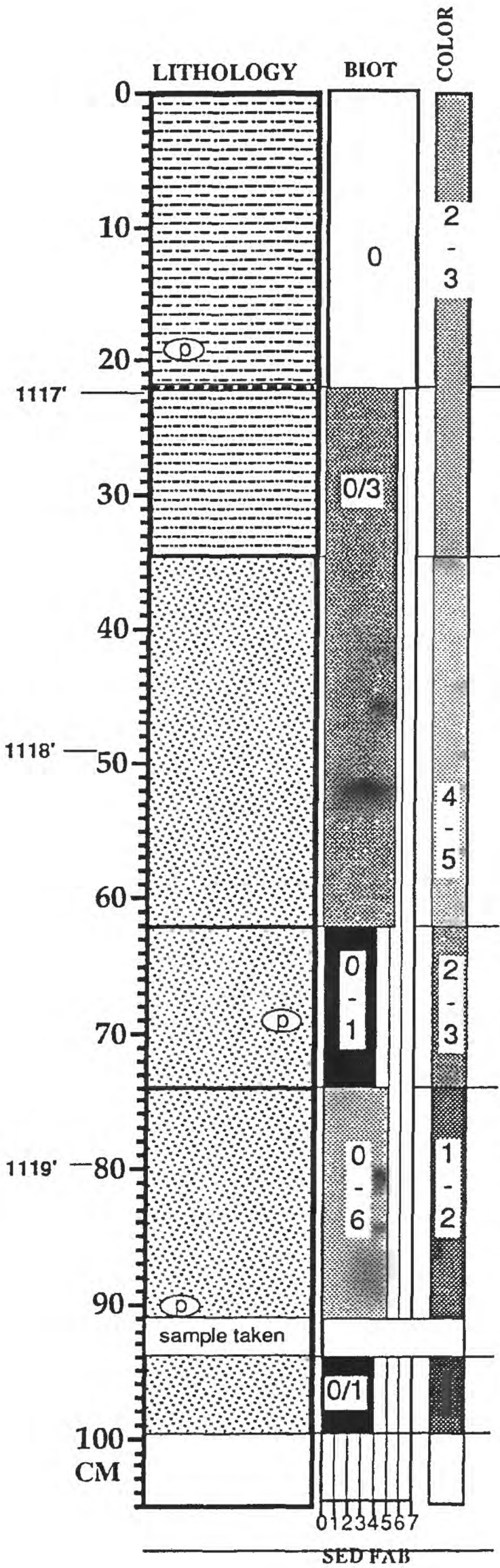

Unit 544 (cont.) - MUDSTONE as above; l. cont. grad. over 3 cm

17578.5 cm

Unit 545- 12.5 cm; SILTY MUDSTONE grading to SILTSTONE; sli. to mod. bioturb. (5/6) w/ small burrows (0/3); med. gry to med. dk. gry. (2/3); l. cont. sharp

17591 cm

Unit 546- 27.5 cm; SANDSTONE, v. fine gr. w/ a few muddy stringers; sli. to mod. bioturb. (5/6) w/ small burrows (0/3); lt. bluish gry. a top grading to v. lt. gry. to yel. gry at base (4/5); l. cont. sharp

17618.5 cm

Unit 547- 12 cm; SILTSTONE, poor. lamin. to sli. bioturb. (3/5); microbioturb. (0/1); med. gry. to med. lt. gry. (2/3); l. cont. sharp

17630.5 cm

Unit 548- 20 cm; interlamination of SANDSTONE, fine gr., and SILTY MUDSTONE, mod. lamin. to mod. bioturb. (2/6); med. dk. gry. to lt. olive (1/2); l. cont. not known because sample was taken

17650.5 cm

Unit 549- 13.5 cm; SILTSTONE, poor. lamin. to sli. bioturb. (3/5); med. dk. gry. to med. lt. gry. (1/2)

MAA/WED/BBS - 6/92

CORE: AMOCO Rebecca K
Bounds #1

BOX # 58b
BOX FOOTAGE 1116-1126

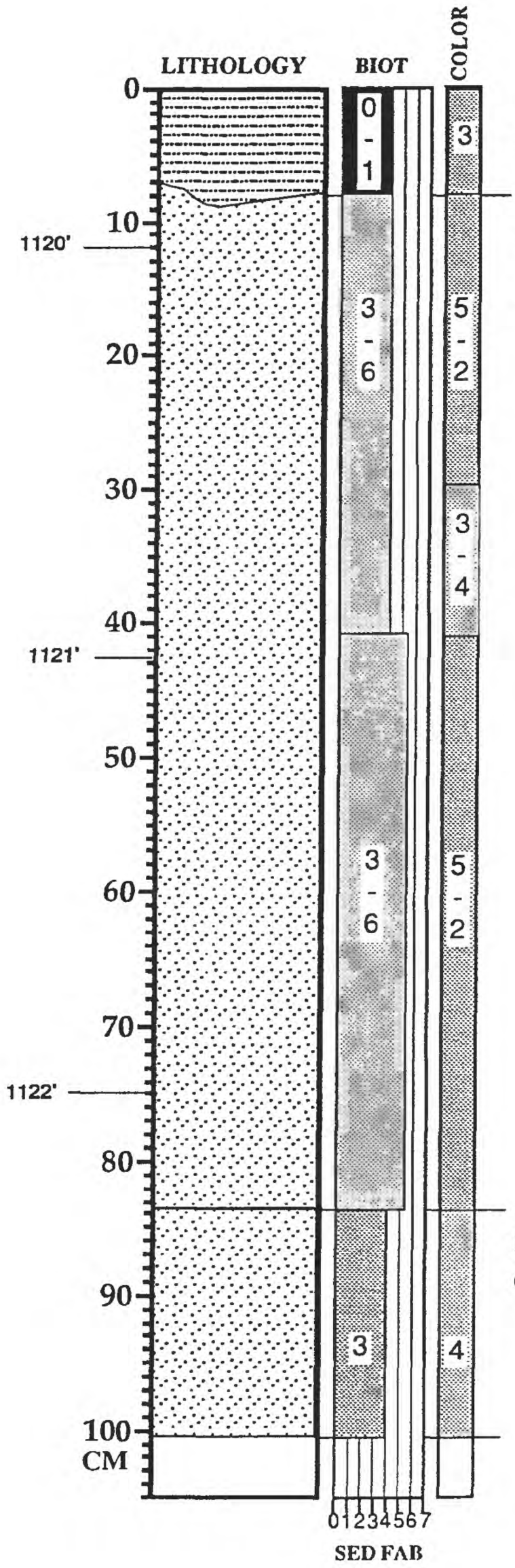

Unit 549 (cont.) -SILTSTONE as above; l. cont. irreg. and grad. over 2 cm

17664 cm

Unit 550 - 76 cm; SANDSTONE; homog. to mod. bioturb.; v. lt. gry. (5) w/ scattered ol. gry. (2) muddy stringers; l. cont. sharp

yel . gry to v/. lt. gry.

17740 cm

Unit 551 - 66 cm; SANDSTONE; mod. bioturb.; yel. gry. (4); contais woody fragments.

MAA/WED/BBS - 6/92

CORE: AMOCO Rebecca K
Bounds #1

BOX # 58c
BOX FOOTAGE 1116-1126

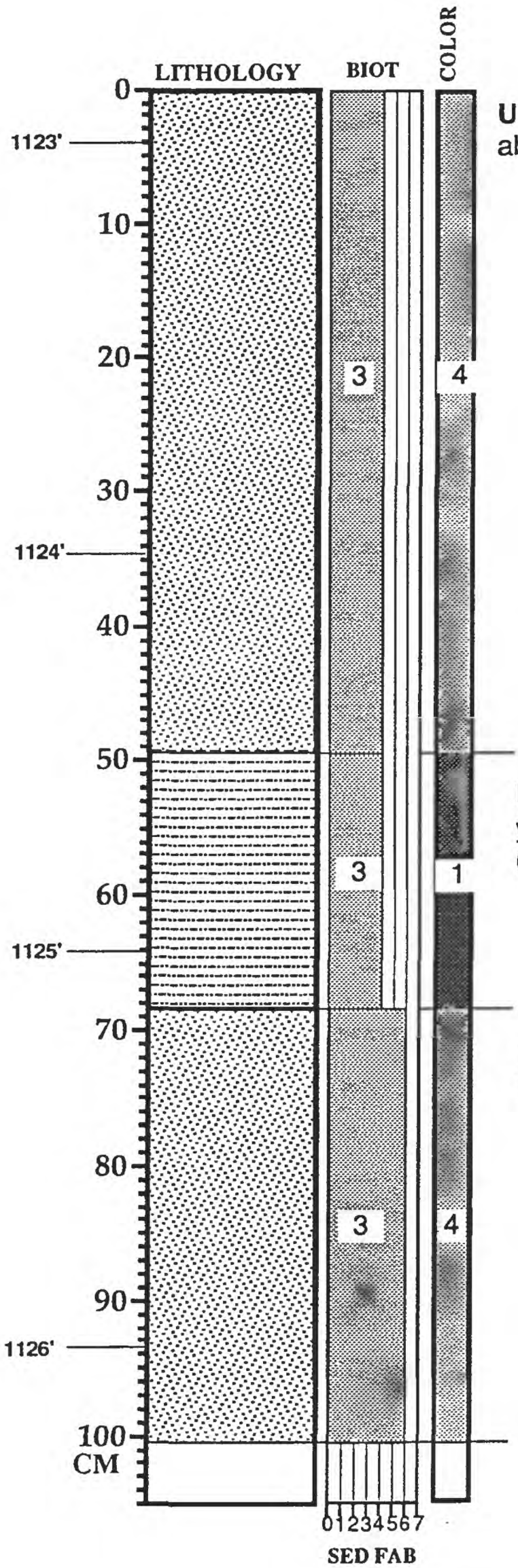

Unit 551 (cont.) - SANDSTONE w/ some muddy zones; as above; l. cont. grad. over 5 cm.

Unit 552 - 19 cm; SANDY MUDSTONE w/ decr. ol. blk. to yel. gry. sandy layers downcore; poorly lam. to sli. bioturb. (3/5); ol. blk. (1); l. cont. sharp

Unit 553 - 32.5+cm; SANDSTONE; highly bioturb. (6) w/ large burrows (3); yel. gry. (4)

MAA/WED/BBS - 6/92

Appendix II. Results of analyses for total carbon (T-C) and carbonate carbon (C-C) in samples from the Niobrara Formation, Carlile Shale, and Greenhorn Formation.

Depth-ft	Depth-m	% T-C	% C-C	% TOC	% CaCO3	Formations or Members
559.22	170.45	9.59	5.12	4.47	32.4	Smoky Hill Chalk Mbr., Niobrara Formation
559.57	170.56	9.13	5.63	3.50	35.6	
559.90	170.66	9.45	5.88	3.57	37.2	
560.25	170.76	9.66	5.65	4.01	35.8	
560.56	170.86	9.82	6.40	3.42	40.5	
560.90	170.96	9.01	6.06	2.95	38.4	
561.20	171.05	10.12	5.79	4.33	36.7	
561.50	171.15	9.84	6.27	3.57	39.7	
562.00	171.30	10.08	6.72	3.36	42.5	
562.35	171.40	9.36	5.96	3.40	37.7	
562.70	171.51	9.18	4.53	4.65	28.7	
563.00	171.60	10.30	5.17	5.13	32.7	
563.28	171.69	9.82	6.02	3.80	38.1	
563.48	171.75	9.98	7.04	2.94	44.6	
563.67	171.81	11.28	7.31	3.97	46.3	
563.85	171.86	9.80	6.32	3.48	40.0	
564.30	172.00	9.79	6.84	2.95	43.3	
564.65	172.11	10.53	5.93	4.60	37.5	
564.94	172.19	10.13	5.58	4.55	35.3	
565.30	172.30	9.90	6.10	3.80	38.6	
565.63	172.40	10.43	6.96	3.47	44.1	
565.95	172.50	10.47	7.72	2.75	48.9	
566.30	172.61	10.48	6.11	4.37	38.7	
566.63	172.71	10.65	6.32	4.33	40.0	
566.70	172.73	10.05	7.09	2.96	44.9	
566.98	172.82	10.82	6.41	4.41	40.6	
567.02	172.83	10.16	6.37	3.79	40.3	
567.19	172.88	10.70	6.07	4.63	38.4	
567.62	173.01	10.20	5.74	4.46	36.3	
567.85	173.08	9.42	5.00	4.42	31.7	
568.28	173.21	9.09	5.50	3.59	34.8	
568.61	173.31	10.73	10.07	0.66	63.7	
568.91	173.40	9.77	5.66	4.11	35.8	
569.20	173.49	9.48	5.15	4.33	32.6	
569.50	173.58	10.98	9.02	1.96	57.1	
570.00	173.74	10.02	6.04	3.98	38.2	
570.20	173.80	10.51	6.29	4.22	39.8	
570.67	173.94	11.30	7.05	4.25	44.6	
571.20	174.10	12.74	8.65	4.09	54.8	
571.36	174.15	14.69	7.94	6.75	50.3	
571.60	174.22	12.91	9.74	3.17	61.7	
571.90	174.32	11.43	7.16	4.27	45.3	
572.25	174.42	11.43	8.30	3.13	52.5	
572.60	174.53	11.14	5.43	5.71	34.4	
572.89	174.62	13.22	7.08	6.14	44.8	
573.15	174.70	12.90	7.15	5.75	45.3	

Appendix II. Results of analyses for total carbon (T-C) and carbonate carbon (C-C) in samples from the Niobrara Formation, Carlile Shale, and Greenhorn Formation.

Depth-ft	Depth-m	% T-C	% C-C	% TOC	% CaCO3	Formations or Members
573.62	174.84	13.65	8.18	5.47	51.8	
574.00	174.96	10.63	7.95	2.68	50.3	
574.22	175.02	11.95	7.31	4.64	46.3	
574.60	175.14	14.44	6.97	7.47	44.1	
574.96	175.25	10.60	10.07	0.53	63.7	
575.26	175.34	11.19	10.06	1.13	63.7	
575.68	175.47	12.45	9.27	3.18	58.7	
575.90	175.53	12.30	9.64	2.66	61.0	
576.07	175.59	13.06	8.80	4.26	55.7	
576.32	175.66	12.92	10.50	2.42	66.5	
576.40	175.69	12.28	9.98	2.30	63.2	
577.00	175.87	12.75	10.24	2.51	64.8	
577.30	175.96	12.84	9.75	3.09	61.7	
577.70	176.08	13.04	9.49	3.55	60.1	
578.00	176.17	10.95	10.35	0.60	65.5	
578.70	176.39	12.08	8.64	3.44	54.7	
578.84	176.43	10.91	10.13	0.78	64.1	
578.85	176.43	13.53	9.75	3.78	61.7	
579.15	176.52	10.55	5.12	5.43	32.4	
579.42	176.61	12.20	10.61	1.59	67.2	
579.75	176.71	12.55	9.88	2.67	62.5	
580.03	176.79	12.55	10.30	2.25	65.2	
580.42	176.91	12.62	11.04	1.58	69.9	
580.77	177.02	11.73	10.85	0.88	68.7	
581.09	177.12	11.48	10.87	0.61	68.8	
581.42	177.22	12.59	9.98	2.61	63.2	
581.75	177.32	12.42	9.15	3.27	57.9	
582.12	177.43	12.12	9.42	2.70	59.6	
582.31	177.49	11.92	8.85	3.07	56.0	
582.65	177.59	11.65	7.62	4.03	48.2	
583.10	177.73	12.42	9.48	2.94	60.0	
583.40	177.82	12.62	9.65	2.97	61.1	
583.75	177.93	12.99	10.57	2.42	66.9	
584.05	178.02	12.79	10.33	2.46	65.4	
584.38	178.12	12.73	7.91	4.82	50.1	
584.69	178.21	12.47	7.94	4.53	50.3	
585.10	178.34	12.59	10.23	2.36	64.8	
585.40	178.43	13.01	8.51	4.50	53.9	
585.72	178.53	10.86	10.18	0.68	64.4	
586.15	178.66	12.22	8.20	4.02	51.9	
586.30	178.70	12.67	9.59	3.08	60.7	
586.45	178.75	11.80	6.33	5.47	40.1	
586.79	178.85	13.83	8.30	5.53	52.5	
587.09	178.95	13.08	8.93	4.15	56.5	
587.22	178.98	13.14	8.83	4.31	55.9	
587.45	179.05	14.24	7.36	6.88	46.6	

Appendix II. Results of analyses for total carbon (T-C) and carbonate carbon (C-C) in samples from the Niobrara Formation, Carlile Shale, and Greenhorn Formation.

Depth-ft	Depth-m	% T-C	% C-C	% TOC	% CaCO3	Formations or Members
587.70	179.13	13.22	8.49	4.73	53.7	
587.95	179.21	13.13	9.58	3.55	60.6	
588.23	179.29	12.97	8.44	4.53	53.4	
588.50	179.37	12.70	7.32	5.38	46.3	
588.85	179.48	14.28	8.58	5.70	54.3	
588.95	179.51	11.47	11.20	0.27	70.9	
589.17	179.58	16.07	8.61	7.46	54.5	
589.60	179.71	13.27	5.67	7.60	35.9	
589.90	179.80	13.77	7.12	6.65	45.1	
590.30	179.92	11.97	8.01	3.96	50.7	
590.60	180.01	12.23	7.43	4.80	47.0	
590.95	180.12	14.68	5.97	8.71	37.8	
591.30	180.23	14.75	7.11	7.64	45.0	
591.65	180.33	16.01	8.18	7.83	51.8	
592.00	180.44	14.78	6.72	8.06	42.5	
592.70	180.65	14.12	8.13	5.99	51.5	
592.39	180.56	11.48	7.94	3.54	50.3	
593.05	180.76	15.31	7.74	7.57	49.0	Fort Hays Limestone Mbr., Niobrara Formation
593.38	180.86	9.39	7.76	1.63	49.1	
593.75	180.98	12.93	10.19	2.74	64.5	
594.23	181.12	13.13	10.28	2.85	65.1	
594.55	181.22	13.36	9.28	4.08	58.7	
594.77	181.29	10.47	8.52	1.95	53.9	
594.92	181.33	12.56	10.33	2.23	65.4	
595.25	181.43	12.58	10.75	1.83	68.1	
595.60	181.54	10.04	9.43	0.61	59.7	
595.80	181.60	12.11	8.83	3.28	55.9	
595.87	181.62	13.27	10.17	3.10	64.4	
596.15	181.71	14.24	8.67	5.57	54.9	
596.30	181.75	11.41	10.68	0.73	67.6	
596.65	181.86	12.05	11.20	0.85	70.9	
597.00	181.97	14.22	10.62	3.60	67.2	
597.40	182.09	14.06	8.26	5.80	52.3	
597.68	182.17	13.84	9.56	4.28	60.5	
597.95	182.26	14.20	9.82	4.38	62.2	
598.29	182.36	12.44	9.46	2.98	59.9	
598.61	182.46	13.39	9.03	4.36	57.2	
599.05	182.59	10.90	10.41	0.49	65.9	
599.20	182.64	13.33	9.78	3.55	61.9	
599.28	182.66	13.34	9.85	3.49	62.4	
599.35	182.68	13.55	9.90	3.65	62.7	
599.50	182.73	11.23	10.57	0.66	66.9	
599.62	182.76	14.75	8.03	6.72	50.8	
599.80	182.82	10.46	8.93	1.53	56.5	
599.95	182.86	12.47	9.78	2.69	61.9	
600.15	182.93	14.19	9.93	4.26	62.9	

Appendix II. Results of analyses for total carbon (T-C) and carbonate carbon (C-C) in samples from the Niobrara Formation, Carlile Shale, and Greenhorn Formation.

Depth-ft	Depth-m	% T-C	% C-C	% TOC	% CaCO3	Formations or Members
600.40	183.00	15.11	7.90	7.21	50.0	
600.50	183.03	10.61	10.14	0.47	64.2	
600.71	183.10	13.31	9.15	4.16	57.9	
600.80	183.12	13.79	9.95	3.84	63.0	
600.93	183.16	12.25	10.26	1.99	65.0	
601.15	183.23	10.53	9.99	0.54	63.2	
601.35	183.29	10.80	10.22	0.58	64.7	
601.50	183.34	11.06	10.64	0.42	67.4	
601.70	183.40	12.36	10.57	1.79	66.9	
601.80	183.43	14.94	7.88	7.06	49.9	
601.95	183.47	15.22	7.21	8.01	45.6	
602.30	183.58	10.78	10.46	0.32	66.2	
603.14	183.84	11.41	10.67	0.74	67.5	
604.25	184.18	16.88	7.81	9.07	49.4	
604.59	184.28	10.61	10.56	0.05	66.8	
604.92	184.38	10.74	10.10	0.64	63.9	
605.29	184.49	10.25	10.16	0.09	64.3	
605.63	184.60	8.88	8.34	0.54	52.8	
606.05	184.72	10.89	10.74	0.15	68.0	
606.35	184.82	11.52	10.76	0.76	68.1	
606.70	184.92	13.40	10.49	2.91	66.4	
607.06	185.03	10.68	10.60	0.08	67.1	
607.40	185.14	11.01	10.89	0.12	68.9	
607.76	185.25	10.64	10.49	0.15	66.4	
608.05	185.33	8.23	7.77	0.46	49.2	
608.43	185.45	11.71	8.63	3.08	54.6	
608.76	185.55	11.01	10.65	0.36	67.4	
609.12	185.66	11.30	11.00	0.30	69.6	
611.03	186.24	10.99	10.38	0.61	65.7	
672	204.83	8.95	8.75	0.20	55.4	Codell Sandstone Mbr., Carlile Shale
673	205.13	15.70	8.53	7.17	54.0	
674	205.44	5.45	5.21	0.24	33.0	
675	205.74	0.91	0.82	0.09	5.2	
677	206.35	4.41	4.36	0.05	27.6	
679	206.96	2.36	2.26	0.10	14.3	
680	207.26	0.19	0.05	0.14	0.3	
681	207.57	0.25	0.02	0.23	0.1	
682	207.87	0.15	0.02	0.13	0.1	
683	208.18	0.12	0.02	0.10	0.1	
684	208.48	0.13	0.02	0.11	0.1	
685	208.79	0.19	0.02	0.17	0.1	
686	209.09	0.17	0.03	0.14	0.2	
688	209.70	0.20	0.02	0.18	0.1	
689	210.01	0.13	0.03	0.10	0.2	
690	210.31	0.22	0.02	0.20	0.1	
691	210.62	0.22	0.02	0.20	0.1	

Appendix II. Results of analyses for total carbon (T-C) and carbonate carbon (C-C) in samples from the Niobrara Formation, Carlile Shale, and Greenhorn Formation.

Depth-ft	Depth-m	% T-C	% C-C	% TOC	% CaCO3	Formations or Members
692	210.92	0.22	0.02	0.20	0.1	
693	211.23	0.18	0.02	0.16	0.1	
694	211.53	0.27	0.02	0.25	0.1	
695	211.84	0.23	0.02	0.21	0.1	
696	212.14	0.21	0.02	0.19	0.1	
697	212.45	0.24	0.02	0.22	0.1	
698	212.75	0.25	0.02	0.23	0.1	
699	213.06	0.20	0.02	0.18	0.1	
700	213.36	0.19	0.02	0.17	0.1	
701	213.66	0.28	0.02	0.26	0.1	
702	213.97	0.28	0.03	0.25	0.2	
703	214.27	0.21	0.04	0.17	0.3	
704	214.58	0.25	0.07	0.18	0.4	
705	214.88	0.21	0.03	0.18	0.2	
706	215.19	0.30	0.04	0.26	0.3	
707	215.49	0.29	0.05	0.24	0.3	
708	215.80	0.30	0.05	0.25	0.3	
709	216.10	0.28	0.04	0.24	0.3	
710	216.41	0.32	0.11	0.21	0.7	
711	216.71	2.06	1.91	0.15	12.1	
712	217.02	0.28	0.02	0.26	0.1	
713	217.32	0.27	0.03	0.24	0.2	
714	217.63	0.29	0.04	0.25	0.3	
715	217.93	0.24	0.03	0.21	0.2	
716	218.24	0.21	0.02	0.19	0.1	
718	218.85	0.27	0.03	0.24	0.2	
719	219.15	0.61	0.03	0.58	0.2	
720	219.46	0.48	0.22	0.26	1.4	
721	219.76	0.30	0.05	0.25	0.3	
722	220.07	0.25	0.04	0.21	0.3	
723	220.37	0.39	0.03	0.36	0.2	
724	220.68	0.33	0.03	0.30	0.2	
725	220.98	0.40	0.05	0.35	0.3	
726	221.28	0.46	0.03	0.43	0.2	
727	221.59	0.37	0.06	0.31	0.4	
728	221.89	0.38	0.08	0.30	0.5	
729	222.20	0.45	0.12	0.33	0.8	
730	222.50	0.40	0.03	0.37	0.2	
731	222.81	0.39	0.09	0.30	0.6	
732	223.11	0.41	0.06	0.35	0.4	
733	223.42	0.45	0.01	0.44	0.1	
734	223.72	0.42	0.03	0.39	0.2	
735	224.03	0.33	0.05	0.28	0.3	
736	224.33	0.36	0.07	0.29	0.4	
737	224.64	0.44	0.03	0.41	0.2	
738	224.94	0.41	0.01	0.40	0.1	

Appendix II. Results of analyses for total carbon (T-C) and carbonate carbon (C-C) in samples from the Niobrara Formation, Carlile Shale, and Greenhorn Formation.

Depth-ft	Depth-m	% T-C	% C-C	% TOC	% CaCO3	Formations or Members
739	225.25	0.43	0.03	0.40	0.2	
740	225.55	0.33	0.03	0.30	0.2	
741	225.86	0.32	0.02	0.30	0.1	
742	226.16	0.72	0.55	0.17	3.5	
743	226.47	0.72	0.46	0.26	2.9	
744	226.77	0.39	0.01	0.38	0.1	
745	227.08	0.38	0.05	0.33	0.3	
746	227.38	0.48	0.14	0.34	0.9	
747	227.69	0.43	0.02	0.41	0.1	
748	227.99	0.68	0.21	0.47	1.3	
749	228.30	0.42	0.03	0.39	0.2	
750	228.60	0.71	0.03	0.68	0.2	
751	228.90	0.66	0.02	0.64	0.1	
752	229.21	0.97	0.01	0.96	0.1	
753	229.51	0.62	0.04	0.58	0.3	
754	229.82	2.63	0.16	2.47	1.0	
755	230.12	2.36	0.02	2.34	0.1	
756	230.43	1.98	0.03	1.95	0.2	
758	231.04	2.17	0.02	2.15	0.1	
759	231.34	2.29	0.04	2.25	0.3	
760	231.65	2.09	0.17	1.92	1.1	
761	231.95	2.49	0.23	2.26	1.5	
763	232.56	2.46	0.19	2.27	1.2	
764	232.87	2.82	0.26	2.56	1.7	
765	233.17	3.06	0.47	2.59	3.0	
766	233.48	2.77	0.43	2.34	2.7	
767	233.78	2.69	0.36	2.33	2.3	
769	234.39	2.89	0.47	2.42	3.0	
771	235.00	2.76	0.33	2.43	2.1	
773	235.61	2.60	0.62	1.98	3.9	
774	235.92	3.89	1.48	2.41	9.4	
776	236.52	3.18	1.07	2.11	6.8	Fairport Chalky Shale Mbr, Carlile Shale
778	237.13	3.45	0.90	2.55	5.7	
780	237.74	3.60	0.67	2.93	4.2	
782	238.35	3.48	0.59	2.89	3.7	
784	238.96	6.50	3.22	3.28	20.4	
786	239.57	4.05	1.36	2.69	8.6	
788	240.18	5.09	2.08	3.01	13.2	
790	240.79	5.78	2.34	3.44	14.8	
791	241.10	6.02	3.06	2.96	19.4	
793	241.71	7.19	4.28	2.91	27.1	
795	242.32	6.75	3.68	3.07	23.3	
797	242.93	6.98	4.33	2.65	27.4	
799	243.54	8.14	4.26	3.88	27.0	
801	244.14	8.66	4.71	3.95	29.8	
803	244.75	9.89	4.91	4.98	31.1	

Appendix II. Results of analyses for total carbon (T-C) and carbonate carbon (C-C) in samples from the Niobrara Formation, Carlile Shale, and Greenhorn Formation.

Depth-ft	Depth-m	% T-C	% C-C	% TOC	% CaCO3	Formations or Members
805	245.36	9.98	5.94	4.04	37.6	
807	245.97	8.69	3.55	5.14	22.5	
962.07	293.24	11.93	7.15	4.78	45.3	Bridge Creek Limestone Mbr, Greenhorn Formation
962.47	293.36	11.62	11.10	0.52	70.3	
963.39	293.64	11.80	6.81	4.99	43.1	
963.64	293.72	10.30	9.80	0.50	62.0	
963.98	293.82	11.98	8.28	3.70	52.4	
964.45	293.96	11.74	8.90	2.84	56.3	
964.85	294.09	10.39	10.08	0.31	63.8	
965.15	294.18	11.62	7.61	4.01	48.2	
965.65	294.33	11.59	7.61	3.98	48.2	
965.90	294.41	10.15	9.45	0.70	59.8	
966.14	294.48	10.31	8.40	1.91	53.2	
966.47	294.58	12.07	6.92	5.15	43.8	
966.77	294.67	0.34	0.19	0.15	1.2	
967.50	294.89	11.22	9.36	1.86	59.2	
967.77	294.98	10.86	9.98	0.88	63.2	
968.25	295.12	10.40	8.52	1.88	53.9	
968.57	295.22	9.78	6.36	3.42	40.3	
968.88	295.31	8.56	7.60	0.96	48.1	
969.55	295.52	11.09	5.34	5.75	33.8	
969.94	295.64	11.49	7.32	4.17	46.3	
970.41	295.78	11.65	7.94	3.71	50.3	
970.71	295.87	11.09	10.87	0.22	68.8	
970.87	295.92	11.42	9.40	2.02	59.5	
971.07	295.98	11.82	8.48	3.34	53.7	
971.31	296.06	10.43	10.01	0.42	63.4	
971.58	296.14	12.03	8.73	3.30	55.3	
971.67	296.17	11.95	7.94	4.01	50.3	
971.95	296.25	12.48	8.11	4.37	51.3	
972.02	296.27	11.64	7.99	3.65	50.6	
972.15	296.31	12.06	7.88	4.18	49.9	
972.23	296.34	11.95	8.73	3.22	55.3	
972.30	296.36	11.49	9.26	2.23	58.6	
972.36	296.38	10.58	9.74	0.84	61.7	
972.45	296.40	10.36	10.08	0.28	63.8	
972.54	296.43	10.46	10.15	0.31	64.2	
972.62	296.45	9.99	9.58	0.41	60.6	
972.70	296.48	10.41	9.30	1.11	58.9	
972.76	296.50	11.43	8.95	2.48	56.7	
972.84	296.52	11.74	8.35	3.39	52.9	
972.90	296.54	11.60	7.82	3.78	49.5	
973.03	296.58	11.09	6.62	4.47	41.9	
973.13	296.61	10.28	5.20	5.08	32.9	
973.22	296.64	11.38	6.77	4.61	42.9	
973.40	296.69	10.43	4.83	5.60	30.6	

Appendix II. Results of analyses for total carbon (T-C) and carbonate carbon (C-C) in samples from the Niobrara Formation, Carlile Shale, and Greenhorn Formation.

Depth-ft	Depth-m	% T-C	% C-C	% TOC	% CaCO3	Formations or Members
973.72	296.79	9.91	9.64	0.27	61.0	
974.00	296.88	12.81	8.78	4.03	55.6	
974.38	296.99	9.45	3.93	5.52	24.9	
974.66	297.08	12.67	8.25	4.42	52.2	
975.55	297.35	9.38	8.77	0.61	55.5	
976.28	297.57	0.21	0.14	0.07	0.9	
976.43	297.62	10.75	10.49	0.26	66.4	
977.37	297.90	11.25	10.54	0.71	66.7	
977.73	298.01	8.01	7.32	0.69	46.3	
977.91	298.07	10.63	4.51	6.12	28.5	
978.40	298.22	12.67	6.15	6.52	38.9	
978.75	298.32	10.83	10.64	0.19	67.4	
979.05	298.41	8.84	3.94	4.90	24.9	
979.19	298.46	8.25	7.70	0.55	48.7	
979.45	298.54	11.83	5.15	6.68	32.6	
980.06	298.72	9.61	9.15	0.46	57.9	
980.86	298.97	10.85	10.53	0.32	66.7	
982.03	299.32	8.17	7.99	0.18	50.6	
982.25	299.39	0.14	0.06	0.08	0.4	
982.42	299.44	2.18	1.83	0.35	11.6	
983.10	299.65	10.26	10.08	0.18	63.8	
983.22	299.69	6.26	5.91	0.35	37.4	
983.40	299.74	9.72	9.40	0.32	59.5	
983.66	299.82	10.77	10.52	0.25	66.6	
983.90	299.89	10.88	8.67	2.21	54.9	
984.33	300.02	8.84	8.27	0.57	52.3	
984.80	300.17	10.04	5.29	4.75	33.5	
985.23	300.30	10.58	6.80	3.78	43.0	
985.38	300.34	10.44	7.22	3.22	45.7	
985.50	300.38	10.02	9.68	0.34	61.3	
985.61	300.41	10.01	9.77	0.24	61.8	
985.80	300.47	10.37	9.42	0.95	59.6	
985.95	300.52	10.51	8.31	2.20	52.6	
986.14	300.58	10.15	8.40	1.75	53.2	
986.73	300.76	9.02	8.47	0.55	53.6	
987.22	300.90	10.83	6.97	3.86	44.1	
987.73	301.06	10.24	5.60	4.64	35.4	
988.12	301.18	9.90	8.98	0.92	56.8	
988.71	301.36	9.41	4.94	4.47	31.3	
989.48	301.59	9.51	4.82	4.69	30.5	
990.27	301.83	8.95	4.81	4.14	30.4	
990.55	301.92	9.08	7.98	1.10	50.5	
991.07	302.08	8.83	4.32	4.51	27.3	Hartland Shale Mbr., Greenhorn Formation

Appendi III. Results of inorganic geochemical analyses of samples from the Niobrara Formation (depths of 559.2 to 611,03 feet) and Greenhorn Formation (depths of 962.07 to 991.07 feet) in the Amoco Bounds core.

SMPL ID	Depth-ft	Depth-m	% Al-icp	% Ca-icp	% Fe-icp	% K-icp	% Mg-icp	% Na-icp	% P-icp	% Ti-icp	ppm Mn	ppm As	ppm Ba	ppm Cd	ppm Ce	ppm Co	ppm Cr	ppm Cu	ppm Ga	ppm La
BO-106	559.22	170.45	5.2	17	2.4	1.50	1.20	0.46	0.06	0.21	120	20	340	4	42	14	68	34	13	23
BO-051	559.57	170.56	5.0	19	2.1	1.40	1.10	0.41	0.06	0.21	130	19	340	5	43	12	67	34	12	24
BO-044	559.90	170.66	4.7	20	2.2	1.40	1.10	0.42	0.06	0.19	140	20	330	6	40	12	63	33	12	23
BO-115	560.25	170.76	4.5	19	2.3	1.40	1.00	0.44	0.06	0.19	130	18	320	3	37	15	58	38	11	22
BO-098	560.56	170.86	4.1	22	2.1	1.30	0.99	0.40	0.05	0.17	120	18	300	6	35	13	54	38	10	21
BO-263	560.90	170.96	4.6	21	2.5	1.30	0.99	0.40	0.06	0.18	120	28	320	<2	38	19	61	44	10	22
BO-165	560.90	170.96	4.6	20	2.5	1.30	0.98	0.40	0.06	0.20	120	29	320	<2	39	18	59	46	11	23
BO-154	561.20	171.05	4.4	21	2.2	1.20	0.87	0.39	0.08	0.18	110	17	320	4	40	16	56	40	10	23
BO-188	561.50	171.15	4.2	21	2.1	1.30	0.89	0.38	0.06	0.19	120	19	300	9	35	12	51	35	11	21
BO-122	562.00	171.30	3.9	22	1.8	1.20	0.98	0.36	0.05	0.16	120	14	310	7	34	18	53	28	10	19
BO-183	562.35	171.40	4.7	20	2.1	1.30	0.93	0.42	0.05	0.19	130	22	310	7	38	14	62	35	12	21
BO-065	562.70	171.51	5.5	15	2.6	1.60	1.10	0.48	0.06	0.22	130	26	280	3	40	14	74	36	14	23
BO-109	563.00	171.60	5.0	18	2.2	1.40	0.91	0.45	0.07	0.21	110	22	320	4	42	15	65	48	12	23
BO-195	563.28	171.69	4.5	20	2.0	1.30	0.91	0.40	0.06	0.18	120	21	300	<2	35	17	55	39	9	21
BO-064	563.48	171.75	3.7	24	1.7	1.10	0.79	0.33	0.06	0.14	110	14	270	3	34	11	49	37	9	20
BO-196	563.67	171.81	3.4	24	1.6	0.97	0.85	0.32	0.06	0.13	110	15	260	5	34	11	45	31	8	19
BO-147	563.85	171.86	4.1	22	1.8	1.20	1.00	0.35	0.05	0.16	120	14	300	4	29	10	54	27	9	19
BO-107	564.30	172.00	4.0	23	1.7	1.10	0.91	0.34	0.06	0.16	120	19	290	9	36	12	54	31	9	20
BO-155	564.65	172.11	4.8	20	2.0	1.20	0.92	0.35	0.05	0.17	110	19	300	5	33	14	60	31	10	19
BO-131	564.94	172.19	4.8	19	2.2	1.30	0.96	0.44	0.05	0.21	110	21	320	6	35	13	66	35	12	20
BO-125	565.30	172.30	4.3	21	1.9	1.20	0.98	0.37	0.05	0.17	110	17	290	7	32	12	56	33	10	18
BO-095	565.63	172.40	3.7	23	1.7	1.10	0.94	0.34	0.08	0.15	120	14	270	5	43	9	50	28	9	22
BO-084	565.95	172.50	3.3	26	1.4	0.99	0.90	0.30	0.05	0.13	120	14	240	6	30	9	47	28	8	16
BO-116	566.30	172.61	4.1	21	2.1	1.20	0.98	0.36	0.06	0.17	110	17	290	4	34	14	59	36	10	19
BO-128	566.63	172.71	4.1	21	1.9	1.20	0.85	0.38	0.06	0.18	110	17	290	<2	34	13	55	49	9	21
BO-186	566.70	172.73	3.8	24	1.9	1.00	0.80	0.35	0.06	0.15	110	25	270	<2	33	15	49	43	8	21
BO-078	566.98	172.82	4.3	22	2.0	1.10	0.76	0.38	0.06	0.16	120	24	280	<2	34	14	60	48	10	21
BO-086	567.02	172.83	4.3	23	2.0	1.20	0.84	0.40	0.07	0.18	110	20	300	2	38	14	61	47	10	22
BO-194	567.19	172.88	4.2	21	2.1	1.20	0.84	0.40	0.07	0.18	110	21	310	7	38	18	60	39	11	22
BO-121	567.62	173.01	4.6	20	2.1	1.30	0.92	0.39	0.06	0.20	110	21	320	9	38	14	66	38	10	22
BO-197	567.85	173.08	5.3	16	2.4	1.50	1.00	0.46	0.06	0.22	120	26	340	10	42	15	72	43	12	23
BO-135	568.28	173.21	4.9	19	2.2	1.40	0.96	0.43	0.06	0.22	110	22	330	8	40	16	72	39	11	23
BO-150	568.61	173.31	4.7	19	2.2	1.30	0.85	0.41	0.06	0.20	110	21	310	8	41	13	67	42	12	23
BO-164	568.91	173.40	4.8	19	2.1	1.40	0.89	0.43	0.06	0.21	110	23	330	5	42	14	66	36	13	24
BO-166	569.20	173.49	5.4	18	2.6	1.40	0.84	0.48	0.07	0.25	110	27	310	3	47	21	72	58	12	26
BO-096	569.50	173.58	4.9	19	2.3	1.30	0.83	0.46	0.06	0.22	110	24	310	8	45	14	68	41	12	23
BO-111	570.00	173.74	4.5	21	2.2	1.30	0.88	0.43	0.06	0.21	110	25	310	8	43	15	67	36	10	23
BO-074	570.20	173.80	4.5	21	2.1	1.20	0.80	0.39	0.05	0.19	110	18	300	4	39	12	66	33	10	22
BO-175	570.67	173.94	3.7	24	1.8	1.00	0.64	0.32	0.06	0.17	100	20	260	4	35	13	50	33	8	20
BO-067	571.20	174.10	2.1	29	1.3	0.80	0.39	0.25	0.05	0.09	100	13	290	2	22	11	56	31	5	14
BO-148	571.36	174.15	2.3	27	1.5	0.79	0.43	0.29	0.09	0.11	110	13	220	3	30	11	30	38	6	19
BO-073	571.60	174.22	1.8	31	1.1	0.69	0.34	0.19	0.05	0.08	100	13	210	5	22	9	25	26	5	14

Appendi III . Results of inorganic geochemical analyses of samples from the Niobrara Formation (depths of 559.2 to 611,03 feet) and Greenhorn Formation (depths of 962.07 to 991.07 feet) in the Amoco Bounds core.

SMPL ID	Depth-ft	Depth-m	% Al-icp	% Ca-icp	% Fe-icp	% K-icp	% Mg-icp	% Na-icp	% P-icp	% Ti-icp	ppm Mn	ppm As	ppm Ba	ppm Cd	ppm Ce	ppm Co	ppm Cr	ppm Cu	ppm Ga	ppm La
BO-104	571.90	174.32	3.4	24	1.8	1.10	0.65	0.38	0.05	0.16	110	26	260	8	27	13	55	40	8	17
BO-126	572.25	174.42	2.6	29	1.5	0.82	0.50	0.27	0.03	0.11	110	18	220	13	25	12	41	32	6	14
BO-136	572.60	174.53	5.1	19	2.4	1.40	0.78	0.42	0.06	0.24	110	25	310	8	36	20	77	42	11	22
BO-198	572.89	174.62	3.5	24	1.8	0.98	0.58	0.30	0.05	0.16	100	17	260	8	33	12	52	42	8	19
BO-094	573.62	174.84	2.3	27	1.5	0.69	0.44	0.22	0.06	0.11	99	15	220	7	26	12	38	40	5	16
BO-184	573.65	174.85	3.3	24	1.8	0.96	0.61	0.29	0.05	0.14	100	21	250	7	31	22	52	40	8	18
BO-049	574.00	174.96	3.1	27	1.3	0.86	0.52	0.36	0.06	0.14	100	13	240	<2	31	12	46	46	6	20
BO-124	574.22	175.02	3.4	25	1.7	0.95	0.61	0.30	0.05	0.15	100	19	270	4	26	13	55	43	8	17
BO-146	574.60	175.14	3.4	24	1.7	0.93	0.65	0.29	0.05	0.18	100	15	260	6	29	12	53	45	9	18
BO-140	574.96	175.25	1.7	34	0.6	0.51	0.34	0.13	0.04	0.07	140	<10	170	<2	18	5	21	18	<4	14
BO-144	575.26	175.34	1.5	34	0.7	0.48	0.30	0.13	0.04	0.07	130	<10	170	<2	18	10	21	19	<4	13
BO-187	575.68	175.47	1.8	32	1.1	0.55	0.32	0.14	0.04	0.09	110	16	180	4	18	9	29	25	5	11
BO-180	575.90	175.53	1.5	33	1.1	0.48	0.27	0.15	0.03	0.07	100	17	180	5	15	9	27	27	<4	10
BO-047	576.07	175.59	2.1	30	1.6	0.69	0.31	0.16	0.06	0.10	95	20	200	5	24	13	37	38	5	15
BO-145	576.32	175.66	1.1	36	0.5	0.35	0.19	0.10	0.02	0.04	120	<10	150	<2	13	7	18	16	<4	9
BO-170	576.40	175.69	1.2	33	0.9	0.43	0.21	0.13	0.03	0.05	99	13	160	7	12	7	23	23	<4	8
BO-174	577.00	175.87	1.0	34	0.8	0.41	0.21	0.23	0.04	0.04	110	11	150	5	13	8	22	21	<4	10
BO-042	577.30	175.96	1.4	33	1.0	0.52	0.24	0.18	0.04	0.07	110	12	170	6	14	9	31	29	4	10
BO-156	577.70	176.08	1.5	33	1.2	0.51	0.23	0.15	0.03	0.07	98	15	180	4	14	14	28	29	4	10
BO-063	578.00	176.17	1.4	34	0.6	0.48	0.25	0.17	0.04	0.06	150	<10	160	<2	19	5	19	17	<4	13
BO-079	578.70	176.39	2.2	30	1.5	0.68	0.35	0.23	0.04	0.11	110	20	190	7	25	10	43	29	6	14
BO-117	578.84	176.43	1.4	34	0.7	0.48	0.25	0.16	0.04	0.06	140	<10	170	<2	18	13	22	17	<4	13
BO-105	578.85	176.43	1.6	32	1.0	0.46	0.25	0.18	0.03	0.07	110	14	160	9	26	9	31	24	4	13
BO-039	579.15	176.52	5.5	18	2.9	1.40	0.67	0.47	0.04	0.28	97	33	170	10	35	17	100	45	14	19
BO-090	579.42	176.61	2.4	28	1.6	0.73	0.35	0.22	0.04	0.11	96	19	200	6	23	11	42	34	5	14
BO-171	579.75	176.71	1.2	34	0.9	0.43	0.23	0.18	0.03	0.05	120	14	150	6	16	9	26	24	<4	10
BO-119	580.03	176.79	0.7	35	0.6	0.31	0.17	0.12	0.02	0.03	130	11	150	5	12	7	17	18	<4	7
BO-035	580.42	176.91	0.6	38	0.5	0.23	0.15	0.07	0.02	0.02	170	10	140	2	10	6	12	22	<4	8
BO-190	580.77	177.02	0.9	36	0.5	0.31	0.19	0.09	0.03	0.04	190	<10	140	<2	11	5	12	16	<4	9
BO-134	581.09	177.12	0.9	37	0.4	0.30	0.18	0.11	0.03	0.03	200	<10	140	<2	12	9	12	13	<4	9
BO-050	581.42	177.22	1.3	34	0.9	0.43	0.22	0.11	0.03	0.06	130	13	160	6	17	10	23	25	<4	12
BO-080	581.75	177.32	2.0	31	1.2	0.60	0.30	0.21	0.03	0.07	120	15	170	8	22	8	38	27	5	14
BO-059	582.12	177.43	2.0	32	1.1	0.58	0.29	0.15	0.03	0.07	120	15	180	8	24	8	37	28	5	15
BO-151	582.31	177.49	2.5	30	1.4	0.68	0.35	0.22	0.03	0.10	120	19	190	9	27	10	47	29	6	15
BO-173	582.65	177.59	3.5	26	1.4	0.80	0.44	0.28	0.03	0.13	100	16	220	6	28	9	48	32	9	17
BO-120	583.10	177.73	1.6	32	1.1	0.54	0.29	0.19	0.04	0.06	110	15	170	7	26	8	31	22	4	15
BO-099	583.40	177.82	1.5	32	0.9	0.54	0.29	0.21	0.03	0.06	110	11	170	5	19	7	30	25	5	13
BO-127	583.75	177.93	0.9	35	0.7	0.28	0.15	0.09	0.02	0.03	120	11	140	4	17	7	18	16	<4	12
BO-129	584.05	178.02	0.9	35	1.0	0.31	0.19	0.10	0.02	0.03	110	15	150	8	19	9	20	20	<4	12
BO-185	584.38	178.12	3.8	26	1.5	0.71	0.34	0.28	0.03	0.10	92	17	190	4	35	11	42	32	8	18
BO-114	584.67	178.21	2.9	26	1.6	0.82	0.54	0.27	0.04	0.11	120	22	200	7	29	13	48	32	7	16
BO-142	585.10	178.34	1.1	35	0.9	0.35	0.19	0.10	0.03	0.04	140	13	140	5	21	11	21	25	<4	14

Appendi III . Results of inorganic geochemical analyses of samples from the Niobrara Formation (depths of 559.2 to 611,03 feet) and Greenhorn Formation (depths of 962.07 to 991.07 feet) in the Amoco Bounds core.

SMPL ID	Depth-ft	Depth-m	% Al-icp	% Ca-icp	% Fe-icp	% K-icp	% Mg-icp	% Na-icp	% P-icp	% Ti-icp	ppm Mn	ppm As	ppm Ba	ppm Cd	ppm Ce	ppm Co	ppm Cr	ppm Cu	ppm Ga	ppm La
BO-130	585.40	178.43	1.9	30	1.8	0.64	0.30	0.20	0.06	0.09	110	25	200	5	27	14	34	40	5	17
BO-069	585.72	178.53	1.5	34	0.6	0.52	0.28	0.16	0.04	0.06	170	<10	160	<2	24	5	23	19	4	16
BO-036	586.30	178.70	1.5	34	1.3	0.49	0.24	0.15	0.04	0.06	130	20	170	12	19	12	33	26	4	12
BO-083	586.45	178.75	4.0	22	2.7	1.20	0.54	0.36	0.05	0.20	110	35	170	10	34	16	86	48	10	18
BO-141	586.79	178.85	2.1	29	1.7	0.64	0.29	0.22	0.04	0.09	98	20	190	9	25	12	43	37	4	15
BO-169	587.09	178.95	2.0	30	1.3	0.62	0.27	0.21	0.04	0.09	110	18	180	9	27	9	43	35	6	15
BO-068	587.22	178.98	2.2	30	1.4	0.62	0.26	0.22	0.04	0.09	110	23	190	7	26	12	45	37	5	15
BO-143	587.45	179.05	2.9	25	2.0	0.79	0.36	0.26	0.04	0.13	95	27	220	13	24	16	59	47	6	16
BO-053	587.70	179.13	1.8	31	1.4	0.57	0.24	0.18	0.03	0.08	100	19	200	6	23	11	38	32	4	14
BO-113	587.95	179.21	1.4	33	1.1	0.46	0.21	0.19	0.02	0.06	110	15	180	8	18	11	31	24	4	12
BO-097	588.23	179.29	2.4	28	1.5	0.78	0.32	0.25	0.03	0.11	110	19	210	8	25	10	53	32	5	15
BO-261	588.23	179.29	2.4	29	1.5	0.78	0.32	0.25	0.03	0.11	110	18	210	8	25	10	53	34	5	15
BO-034	588.50	179.37	3.3	26	2.0	0.97	0.43	0.33	0.04	0.16	110	24	240	10	29	12	72	40	8	16
BO-137	588.85	179.48	2.1	29	1.3	0.61	0.28	0.18	0.03	0.09	110	20	200	7	22	9	37	36	5	14
BO-054	588.95	179.51	1.7	33	0.7	0.57	0.26	0.20	0.07	0.07	130	11	200	<2	34	6	30	26	<4	21
BO-076	589.17	179.58	1.5	30	1.4	0.48	0.22	0.16	0.07	0.07	110	15	170	6	29	14	34	37	<4	18
BO-101	589.60	179.71	4.1	21	2.8	1.20	0.53	0.41	0.04	0.20	100	34	270	12	33	19	81	47	10	19
BO-172	589.90	179.80	3.3	25	1.8	0.96	0.44	0.31	0.04	0.15	110	24	230	9	29	16	64	47	8	18
BO-162	590.30	179.92	2.8	28	1.3	0.83	0.38	0.30	0.07	0.12	120	19	230	<2	36	11	44	50	5	22
BO-103	590.60	180.01	3.1	25	1.9	0.88	0.39	0.29	0.05	0.14	110	24	230	12	36	14	61	45	7	20
BO-177	590.95	180.12	4.0	21	2.4	1.10	0.46	0.30	0.06	0.18	110	33	270	15	44	18	75	60	9	24
BO-182	591.30	180.23	3.0	25	2.2	0.90	0.37	0.33	0.05	0.13	110	25	220	13	35	27	56	48	6	21
BO-091	591.65	180.33	2.0	27	1.6	0.64	0.26	0.23	0.06	0.09	110	18	200	15	39	13	45	46	5	22
BO-061	592.00	180.44	3.8	24	2.1	0.97	0.39	0.34	0.05	0.16	140	27	250	9	40	12	75	57	9	23
BO-160	592.39	180.56	2.9	28	1.5	0.91	0.38	0.33	0.06	0.12	120	20	240	2	36	15	50	49	5	22
BO-176	592.70	180.65	2.4	28	1.7	0.73	0.30	0.25	0.04	0.10	110	27	200	9	26	12	51	44	6	16
BO-041	593.05	180.76	2.2	28	1.9	0.75	0.29	0.28	0.05	0.09	110	23	200	8	25	14	52	48	5	16
BO-043	593.38	180.86	4.0	26	1.3	1.20	0.54	0.37	0.10	0.21	150	18	320	<2	34	9	61	50	6	22
BO-200	593.75	180.98	1.1	34	0.9	0.44	0.17	0.11	0.04	0.04	140	12	170	7	14	11	29	44	<4	11
BO-264	593.75	180.98	1.1	35	1.0	0.44	0.17	0.10	0.04	0.04	140	14	170	7	13	11	29	42	<4	11
BO-092	594.23	181.12	0.8	35	0.9	0.42	0.15	0.15	0.03	0.03	140	15	160	6	10	8	23	36	<4	8
BO-192	594.55	181.22	1.4	32	1.3	0.70	0.23	0.28	0.03	0.06	130	20	180	11	14	14	35	53	<4	10
BO-139	594.77	181.29	2.6	30	1.0	0.96	0.40	0.25	0.07	0.12	140	10	240	<2	23	9	44	48	5	15
BO-112	594.92	181.33	1.0	35	0.7	0.41	0.19	0.17	0.04	0.04	180	10	160	<2	12	11	20	26	<4	10
BO-179	595.25	181.43	0.7	36	0.6	0.33	0.17	0.15	0.03	0.03	180	<10	150	<2	10	6	16	27	<4	8
BO-072	595.60	181.54	2.3	32	0.7	0.80	0.34	0.29	0.05	0.09	170	<10	190	<2	19	5	34	22	4	14
BO-085	595.80	181.60	2.0	30	1.4	0.74	0.33	0.28	0.07	0.07	150	19	180	2	19	13	37	40	<4	12
BO-038	595.87	181.62	1.0	35	1.0	0.39	0.17	0.13	0.04	0.04	170	13	140	4	12	9	21	28	<4	8
BO-046	596.15	181.71	2.0	30	1.5	0.76	0.30	0.18	0.06	0.08	130	21	190	4	18	12	41	46	6	13
BO-087	596.30	181.75	1.1	36	0.5	0.43	0.21	0.10	0.04	0.04	220	<10	160	<2	12	4	19	16	<4	9
BO-052	596.65	181.86	0.5	38	0.4	0.20	0.14	0.06	0.03	0.02	250	<10	130	<2	8	5	10	17	<4	8
BO-070	597.00	181.97	0.5	36	0.7	0.24	0.11	0.08	0.05	0.02	160	<10	140	2	9	7	12	27	<4	7

Appendi III . Results of inorganic geochemical analyses of samples from the Niobrara Formation (depths of 559.2 to 611,03 feet) and Greenhorn Formation (depths of 962.07 to 991.07 feet) in the Amoco Bounds core.

SMPL ID	Depth-ft	Depth-m	% Al-icp	% Ca-icp	% Fe-icp	% K-icp	% Mg-icp	% Na-icp	% P-icp	% Ti-icp	ppm Mn	ppm As	ppm Ba	ppm Cd	ppm Ce	ppm Co	ppm Cr	ppm Cu	ppm Ga	ppm La
BO-163	597.40	182.09	2.0	28	1.9	0.77	0.32	0.16	0.06	0.08	120	28	200	5	15	16	46	54	5	12
BO-138	597.68	182.17	1.1	33	1.4	0.41	0.19	0.12	0.05	0.04	140	20	160	11	12	15	27	45	<4	10
BO-161	597.95	182.26	1.0	33	1.1	0.51	0.17	0.27	0.05	0.04	150	14	150	4	11	10	25	47	<4	10
BO-066	598.29	182.36	1.7	32	1.0	0.58	0.24	0.14	0.06	0.07	150	11	190	4	17	10	36	40	4	14
BO-181	598.61	182.46	1.5	32	0.9	0.66	0.25	0.29	0.04	0.07	150	13	180	3	12	12	40	49	<4	10
BO-189	599.05	182.59	1.2	35	0.4	0.51	0.22	0.16	0.04	0.05	200	<10	170	<2	12	5	21	22	<4	12
BO-132	599.20	182.64	1.0	34	1.1	0.46	0.19	0.17	0.06	0.04	160	12	170	4	13	16	19	34	<4	11
BO-089	599.28	182.66	1.0	33	0.9	0.50	0.19	0.17	0.04	0.04	170	<10	170	4	11	8	22	30	<4	10
BO-058	599.35	182.68	0.9	34	1.0	0.48	0.18	0.18	0.04	0.04	170	13	170	6	10	9	19	38	<4	10
BO-088	599.50	182.73	1.2	35	0.5	0.45	0.22	0.10	0.03	0.05	220	<10	170	<2	14	4	22	15	<4	10
BO-102	599.62	182.76	2.1	27	2.0	0.85	0.34	0.24	0.06	0.09	130	26	210	4	20	19	41	62	7	13
BO-071	599.80	182.82	1.9	33	0.7	0.71	0.34	0.24	0.05	0.08	260	<10	200	<2	18	5	24	16	5	15
BO-045	599.95	182.86	1.3	33	1.0	0.49	0.23	0.12	0.04	0.05	210	10	160	3	15	16	22	26	<4	12
BO-193	600.15	182.93	1.0	33	0.9	0.43	0.18	0.12	0.04	0.04	170	12	160	10	13	10	25	40	4	8
BO-056	600.40	183.00	2.1	27	1.8	0.81	0.33	0.23	0.09	0.09	140	29	220	5	22	17	38	68	6	16
BO-168	600.50	183.03	1.6	33	0.5	0.59	0.29	0.16	0.04	0.06	280	<10	190	<2	16	3	20	16	4	14
BO-082	600.71	183.10	1.5	31	1.3	0.61	0.26	0.16	0.10	0.07	170	14	200	<2	22	17	26	42	4	17
BO-118	600.80	183.12	0.8	33	1.2	0.34	0.18	0.11	0.04	0.04	190	22	150	<2	13	8	14	30	<4	10
BO-262	600.80	183.12	0.8	35	1.2	0.34	0.18	0.11	0.04	0.03	190	24	150	<2	11	9	14	32	<4	11
BO-153	600.93	183.16	1.1	35	0.6	0.49	0.21	0.17	0.03	0.04	210	<10	170	<2	11	7	17	26	<4	10
BO-152	601.15	183.23	1.5	34	0.5	0.57	0.30	0.18	0.04	0.06	270	<10	170	<2	16	4	19	9	<4	16
BO-191	601.35	183.29	1.5	34	0.5	0.56	0.27	0.13	0.05	0.06	260	<10	170	<2	23	5	18	19	<4	18
BO-100	601.50	183.34	1.2	35	0.5	0.45	0.23	0.10	0.05	0.04	270	<10	150	<2	22	5	17	15	<4	17
BO-157	601.70	183.40	1.0	36	0.6	0.38	0.18	0.10	0.03	0.03	210	<10	150	<2	16	9	17	21	<4	13
BO-055	601.80	183.43	3.1	27	1.7	0.60	0.28	0.21	0.05	0.07	130	25	190	5	25	13	44	55	5	16
BO-133	601.95	183.47	3.6	25	2.0	0.63	0.32	0.25	0.06	0.10	120	23	210	4	32	17	46	70	7	17
BO-260	602.30	183.58	1.2	35	0.6	0.46	0.26	0.12	0.05	0.04	300	<10	150	2	25	5	15	15	4	18
BO-057	602.30	183.58	1.2	36	0.6	0.47	0.26	0.12	0.05	0.04	300	<10	150	2	25	6	14	15	5	20
BO-093	603.14	183.84	1.0	35	0.5	0.39	0.23	0.10	0.04	0.04	290	<10	150	<2	16	7	18	21	<4	12
BO-060	604.25	184.18	1.7	27	2.2	0.66	0.31	0.19	0.05	0.07	180	23	180	8	16	33	38	59	6	12
BO-037	604.59	184.28	1.2	36	0.5	0.47	0.32	0.13	0.08	0.05	660	<10	150	<2	15	5	14	20	4	15
BO-081	604.92	184.38	1.4	34	0.7	0.55	0.36	0.15	0.04	0.05	410	<10	170	<2	12	12	20	36	<4	11
BO-062	605.29	184.49	1.5	34	0.8	0.56	0.42	0.16	0.14	0.06	980	<10	170	<2	21	7	14	15	5	18
BO-158	605.63	184.60	3.2	29	1.0	1.00	0.82	0.29	0.09	0.12	670	<10	240	<2	27	34	31	44	6	20
BO-077	606.05	184.72	1.0	36	0.4	0.36	0.32	0.11	0.05	0.03	1200	<10	120	<2	9	5	7	7	<4	11
BO-178	606.35	184.82	0.9	36	0.4	0.36	0.31	0.10	0.04	0.04	1000	<10	120	<2	9	5	9	12	<4	10
BO-159	606.70	184.92	1.1	35	0.5	0.44	0.35	0.12	0.04	0.04	820	<10	140	<2	10	12	12	13	<4	10
BO-199	607.06	185.03	1.2	35	0.6	0.48	0.37	0.20	0.04	0.05	750	<10	140	<2	13	5	11	13	4	12
BO-149	607.40	185.14	0.9	37	0.3	0.32	0.29	0.11	0.06	0.03	1000	<10	110	<2	10	5	6	6	<4	13
BO-167	607.76	185.25	1.3	34	0.4	0.44	0.37	0.13	0.04	0.04	780	<10	140	<2	18	5	11	16	4	16
BO-048	608.05	185.33	3.6	26	1.3	1.20	1.10	0.35	0.14	0.15	690	12	290	<2	40	12	43	41	10	32
BO-110	608.43	185.45	2.4	28	1.4	0.87	0.51	0.22	0.04	0.09	230	15	210	3	22	16	50	52	6	14

Appendi III . Results of inorganic geochemical analyses of samples from the Niobrara Formation (depths of 559.2 to 611,03 feet) and Greenhorn Formation (depths of 962.07 to 991.07 feet) in the Amoco Bounds core.

SMPL ID	Depth-ft	Depth-m	% Al-icp	% Ca-icp	% Fe-icp	% K-icp	% Mg-icp	% Na-icp	% P-icp	% Ti-icp	ppm Mn	ppm As	ppm Ba	ppm Cd	ppm Ce	ppm Co	ppm Cr	ppm Cu	ppm Ga	ppm La
BO-040	608.76	185.55	1.0	37	0.6	0.39	0.31	0.12	0.03	0.03	500	<10	130	<2	15	6	12	10	<4	13
BO-108	609.12	185.66	0.8	37	0.4	0.33	0.28	0.09	0.02	0.03	490	<10	120	<2	11	4	10	8	<4	11
BO-075	611.03	186.24	1.3	35	0.5	0.50	0.24	0.25	0.03	0.05	250	<10	170	<2	14	4	18	15	<4	13
BO-228	962.07	293.24	2.9	25	1.1	0.99	0.68	0.42	0.05	0.11	61	14	220	<2	22	10	34	38	6	14
BO-249	962.47	293.36	0.5	38	0.3	0.10	0.33	0.10	0.02	0.01	380	<10	33	<2	8	2	2	3	<4	8
BO-006	963.39	293.64	3.3	24	1.0	1.00	0.70	0.45	0.04	0.12	67	13	230	<2	24	9	37	36	8	15
BO-222	963.64	293.72	1.0	34	0.3	0.33	0.36	0.22	0.02	0.04	110	<10	93	<2	14	4	14	10	<4	10
BO-026	963.98	293.82	2.1	29	0.8	0.72	0.58	0.39	0.03	0.09	73	12	180	<2	15	8	29	32	5	11
BO-230	964.45	293.96	1.6	31	0.6	0.53	0.42	0.34	0.03	0.07	82	<10	130	<2	14	5	19	24	<4	10
BO-002	964.85	294.09	1.0	34	0.5	0.32	0.36	0.20	0.02	0.04	190	<10	76	<2	9	3	7	10	<4	9
BO-227	965.15	294.18	2.6	27	1.1	0.84	0.63	0.45	0.04	0.11	79	14	180	<2	19	11	26	32	7	11
BO-033	965.65	294.33	2.7	27	0.9	0.88	0.62	0.46	0.04	0.11	78	<10	200	<2	19	9	29	33	8	13
BO-229	965.90	294.41	1.5	33	0.5	0.46	0.45	0.31	0.03	0.06	130	<10	120	<2	18	4	13	10	4	11
BO-208	966.14	294.48	2.2	29	0.6	0.68	0.51	0.41	0.03	0.09	90	<10	170	<2	24	6	22	24	5	16
BO-211	966.47	294.58	3.4	24	1.0	0.94	0.66	0.51	0.04	0.13	65	14	230	<2	33	9	34	44	9	19
BO-255	966.77	294.67	13.0	1	1.0	0.56	2.00	1.90	0.04	0.19	64	27	400	<2	35	2	5	4	20	16
BO-015	967.50	294.89	1.4	32	0.4	0.45	0.36	0.29	0.02	0.05	120	<10	120	<2	18	5	12	20	<4	13
BO-029	967.77	294.98	0.9	34	0.3	0.30	0.29	0.20	0.02	0.03	130	<10	81	<2	12	5	7	10	<4	9
BO-205	968.25	295.12	2.2	30	0.8	0.68	0.56	0.45	0.05	0.09	110	<10	160	<2	20	7	21	25	6	13
BO-212	968.57	295.22	4.2	22	1.1	1.10	0.79	0.66	0.06	0.17	83	10	250	<2	26	10	40	49	10	16
BO-243	968.88	295.31	2.8	26	1.0	0.88	0.94	0.52	0.05	0.12	130	<10	190	<2	28	6	29	20	7	16
BO-016	969.55	295.52	4.5	18	1.3	1.30	0.88	0.59	0.05	0.18	62	11	270	<2	27	12	51	56	11	16
BO-008	969.94	295.64	3.0	25	1.1	0.99	0.67	0.54	0.06	0.13	79	<10	210	<2	23	11	35	53	7	14
BO-225	970.41	295.78	2.6	28	1.1	0.82	0.52	0.49	0.05	0.11	69	13	170	<2	15	9	31	43	4	10
BO-221	970.71	295.87	0.6	37	0.8	0.19	0.30	0.16	0.03	0.02	230	<10	52	<2	5	3	8	6	<4	5
BO-213	970.87	295.92	1.4	32	0.7	0.49	0.40	0.31	0.04	0.06	97	<10	110	<2	9	7	16	23	<4	7
BO-204	971.07	295.98	2.3	29	0.8	0.69	0.55	0.39	0.04	0.09	82	<10	160	<2	15	8	23	28	6	9
BO-239	971.31	296.06	1.2	34	0.4	0.36	0.38	0.27	0.03	0.05	120	<10	96	<2	11	4	11	10	<4	9
BO-022	971.58	296.14	2.0	30	0.8	0.61	0.46	0.38	0.04	0.09	86	<10	140	<2	16	8	20	31	4	10
BO-252	971.67	296.17	2.7	27	1.2	0.79	0.55	0.49	0.05	0.12	85	19	170	<2	18	10	25	43	5	12
BO-238	971.95	296.25	2.3	28	1.0	0.69	0.51	0.43	0.05	0.10	75	<10	170	<2	17	9	25	39	6	11
BO-003	972.02	296.27	2.4	27	1.0	0.77	0.55	0.44	0.05	0.10	84	<10	160	<2	18	9	26	35	5	12
BO-007	972.15	296.31	2.5	27	1.1	0.81	0.59	0.42	0.05	0.11	80	11	190	<2	18	9	27	30	7	11
BO-023	972.23	296.34	1.9	30	0.8	0.61	0.45	0.35	0.04	0.08	94	<10	150	<2	14	9	19	25	4	10
BO-032	972.30	296.36	1.4	32	0.8	0.47	0.40	0.27	0.03	0.06	110	<10	120	<2	13	9	14	22	<4	9
BO-251	972.36	296.38	1.0	33	0.5	0.35	0.34	0.22	0.03	0.04	140	<10	93	<2	10	5	9	9	<4	9
BO-217	972.54	296.43	0.8	35	0.6	0.27	0.33	0.19	0.03	0.03	190	<10	73	<2	8	3	6	10	<4	8
BO-247	972.62	296.45	1.2	33	0.4	0.40	0.37	0.27	0.03	0.05	150	<10	100	<2	11	4	10	10	<4	9
BO-017	972.70	296.48	1.4	32	0.6	0.45	0.38	0.30	0.03	0.06	130	<10	120	<2	13	9	12	14	<4	10
BO-214	972.76	296.50	1.6	31	0.8	0.53	0.42	0.32	0.04	0.06	100	<10	130	<2	15	8	16	24	<4	11
BO-024	972.84	296.52	2.1	29	0.9	0.68	0.53	0.41	0.04	0.09	94	10	160	<2	18	10	21	26	5	11
BO-025	972.90	296.54	2.5	27	1.0	0.79	0.59	0.44	0.04	0.10	86	12	190	<2	21	9	26	28	7	12

Appendi III . Results of inorganic geochemical analyses of samples from the Niobrara Formation (depths of 559.2 to 611,03 feet) and Greenhorn Formation (depths of 962.07 to 991.07 feet) in the Amoco Bounds core.

SMPL ID	Depth-ft	Depth-m	% Al-icp	% Ca-icp	% Fe-icp	% K-icp	% Mg-icp	% Na-icp	% P-icp	% Ti-icp	ppm Mn	ppm As	ppm Ba	ppm Cd	ppm Ce	ppm Co	ppm Cr	ppm Cu	ppm Ga	ppm La
BO-236	973.03	296.58	3.4	23	1.2	1.00	0.72	0.48	0.04	0.13	78	<10	230	<2	23	9	35	32	8	14
BO-209	973.13	296.61	4.5	18	1.6	1.30	0.91	0.55	0.04	0.17	73	15	300	<2	25	11	49	42	10	15
BO-265	973.13	296.61	4.6	18	1.6	1.30	0.93	0.55	0.04	0.16	74	16	300	<2	25	11	48	39	10	15
BO-244	973.22	296.64	3.4	23	1.2	0.98	0.82	0.43	0.04	0.12	78	11	220	<2	23	10	35	31	8	14
BO-246	973.40	296.69	5.0	17	1.6	1.50	0.97	0.59	0.05	0.18	76	16	300	<2	29	11	54	41	11	17
BO-203	973.53	296.73	4.5	19	1.4	1.30	0.87	0.53	0.05	0.17	78	13	270	<2	26	11	50	43	10	17
BO-233	973.72	296.79	1.1	34	0.4	0.34	0.34	0.25	0.03	0.04	170	<10	96	<2	16	3	8	8	<4	12
BO-207	974.00	296.88	1.6	30	0.7	0.55	0.41	0.28	0.03	0.06	90	<10	150	<2	19	7	18	28	5	13
BO-248	974.38	296.99	5.3	13	1.7	1.60	1.10	0.63	0.05	0.18	84	18	330	<2	26	10	50	35	12	17
BO-215	974.66	297.08	2.2	29	0.7	0.59	0.59	0.30	0.03	0.07	100	<10	150	<2	19	6	18	21	5	12
BO-245	975.55	297.35	2.3	30	0.8	0.69	0.60	0.44	0.04	0.09	140	10	160	<2	33	5	17	24	6	23
BO-266	975.55	297.35	2.4	30	0.8	0.70	0.60	0.45	0.05	0.09	140	<10	160	<2	33	6	17	23	7	24
BO-009	976.28	297.57	12.0	1	0.7	0.46	2.10	2.20	0.03	0.14	33	<10	450	<2	31	1	2	5	21	15
BO-021	976.43	297.62	0.6	36	0.2	0.17	0.26	0.14	0.02	0.02	210	<10	66	<2	42	2	5	8	<4	28
BO-210	977.37	297.90	0.7	36	0.4	0.21	0.32	0.17	0.07	0.03	130	<10	70	<2	20	4	8	9	<4	14
BO-011	977.73	298.01	3.0	25	1.0	0.83	0.67	0.52	0.06	0.15	110	<10	180	<2	30	7	31	24	6	18
BO-250	977.91	298.07	4.8	15	1.9	1.40	0.84	0.61	0.05	0.21	76	14	280	<2	29	14	58	53	12	18
BO-019	978.40	298.22	3.6	21	1.6	1.00	0.72	0.49	0.05	0.16	89	10	220	<2	26	13	39	49	9	16
BO-014	978.75	298.32	0.8	36	0.4	0.24	0.36	0.20	0.02	0.03	550	<10	54	<2	10	3	9	6	<4	8
BO-012	979.05	298.41	5.3	14	1.9	1.50	0.96	0.66	0.05	0.25	94	<10	300	<2	30	15	63	49	13	18
BO-235	979.19	298.46	2.4	27	0.9	0.68	0.63	0.44	0.04	0.11	160	<10	160	<2	24	5	27	20	5	15
BO-240	979.45	298.54	4.4	18	1.9	1.10	0.76	0.62	0.08	0.20	95	11	250	<2	30	14	63	51	11	17
BO-031	980.06	298.72	2.0	32	1.2	0.41	0.50	0.40	0.03	0.13	290	<10	110	<2	14	9	36	26	<4	10
BO-253	980.86	298.97	0.8	36	0.9	0.22	0.41	0.18	0.02	0.04	650	<10	61	<2	8	5	13	8	<4	5
BO-027	982.03	299.32	3.6	28	1.4	0.71	0.65	0.65	0.09	0.18	360	<10	160	<2	50	11	96	22	9	28
BO-259	982.03	299.32	3.6	27	1.6	0.74	0.66	0.65	0.09	0.17	360	<10	160	<2	52	11	98	23	8	30
BO-206	982.25	299.39	12.0	1	1.2	0.48	2.50	1.90	0.02	0.15	98	<10	310	<2	53	2	3	6	24	27
BO-231	982.42	299.44	9.0	7	6.0	0.79	1.20	1.50	0.02	0.61	500	15	59	<2	27	54	490	90	16	13
BO-030	983.10	299.65	1.5	35	0.7	0.33	0.40	0.32	0.04	0.06	410	<10	230	<2	22	5	25	7	4	16
BO-220	983.22	299.69	5.9	21	2.3	1.10	0.84	0.82	0.06	0.26	180	<10	280	<2	36	10	97	17	12	21
BO-237	983.40	299.74	2.0	32	0.7	0.55	0.44	0.44	0.05	0.09	240	<10	170	<2	24	5	16	12	4	16
BO-013	983.66	299.82	0.9	36	0.5	0.28	0.31	0.22	0.02	0.04	380	<10	97	<2	11	5	7	8	<4	11
BO-242	983.90	299.89	2.1	30	1.1	0.69	0.45	0.42	0.04	0.09	210	13	160	<2	19	18	19	20	6	13
BO-001	984.33	300.02	3.1	29	1.0	0.88	0.68	0.57	0.05	0.17	140	11	420	<2	30	7	27	25	6	17
BO-258	984.33	300.02	3.1	28	1.0	0.89	0.68	0.58	0.05	0.16	140	10	360	<2	32	6	27	22	6	17
BO-010	984.80	300.17	5.3	18	1.4	1.30	0.87	0.60	0.07	0.19	78	<10	320	<2	39	10	45	42	12	19
BO-028	985.23	300.30	4.0	24	1.3	1.20	0.80	0.55	0.05	0.18	100	<10	230	<2	28	10	34	42	9	16
BO-241	985.38	300.34	3.5	25	1.2	1.10	0.63	0.57	0.03	0.16	100	<10	230	<2	24	11	29	38	9	15
BO-232	985.50	300.38	1.8	34	0.7	0.53	0.39	0.36	0.03	0.09	190	<10	190	<2	20	4	13	10	4	14
BO-004	985.61	300.41	1.7	33	0.5	0.53	0.39	0.36	0.03	0.08	200	<10	200	<2	21	6	12	11	4	15
BO-018	985.80	300.47	2.0	32	0.6	0.61	0.39	0.39	0.03	0.08	140	<10	180	<2	21	8	15	21	<4	14
BO-219	985.95	300.52	2.9	29	0.9	0.84	0.49	0.50	0.04	0.13	97	<10	210	<2	26	7	26	33	6	15

Appendi III . Results of inorganic geochemical analyses of samples from the Niobrara Formation (depths of 559.2 to 611,03 feet) and Greenhorn Formation (depths of 962.07 to 991.07 feet) in the Amoco Bounds core.

SMPL ID	Depth-ft	Depth-m	% Al-icp	% Ca-icp	% Fe-icp	% K-icp	% Mg-icp	% Na-icp	% P-icp	% Ti-icp	ppm Mn	ppm As	ppm Ba	ppm Cd	ppm Ce	ppm Co	ppm Cr	ppm Cu	ppm Ga	ppm La
BO-005	986.14	300.58	2.8	29	0.9	0.83	0.52	0.47	0.04	0.12	99	<10	250	<2	28	7	26	26	7	16
BO-234	986.73	300.76	3.0	29	1.0	0.83	0.51	0.44	0.05	0.14	150	<10	230	<2	38	6	23	16	7	22
BO-223	987.22	300.90	3.9	24	1.4	1.00	0.59	0.44	0.05	0.15	79	12	230	<2	32	9	28	28	9	18
BO-218	987.73	301.06	4.5	20	1.4	1.40	0.85	0.45	0.05	0.18	74	12	320	<2	32	10	48	40	12	19
BO-216	988.12	301.18	2.5	31	0.7	0.74	0.43	0.39	0.04	0.11	120	10	190	<2	28	5	17	20	4	18
BO-202	988.71	301.36	4.9	17	1.5	1.60	0.84	0.42	0.05	0.19	62	12	320	<2	39	11	58	36	13	22
BO-224	989.48	301.59	5.3	17	1.6	1.50	0.81	0.46	0.06	0.20	67	13	520	<2	40	10	59	39	12	24
BO-226	990.27	301.83	5.6	17	1.6	1.70	0.81	0.55	0.05	0.24	80	11	320	<2	36	10	57	45	13	22
BO-020	990.55	301.92	3.4	27	1.0	1.00	0.58	0.40	0.05	0.15	110	<10	230	<2	32	6	30	29	6	19
BO-254	991.07	302.08	5.6	15	1.8	1.80	0.94	0.47	0.09	0.21	65	13	380	<2	46	20	70	41	12	25

Appendi III . Results of morganic geochemical analyses of samples from the Niobrara Formation (depths of 559.2 to 611,03 feet) and Greenhorn Formation (depths of 962.07 to 991.07 feet) in the Amoco Bounds core.

Depth-ft	ppm Li	ppm Mo	ppm Nb	ppm Nd	ppm Ni	ppm Pb	ppm Sc	ppm Sr	ppm Th	ppm V	ppm Y	ppm Yb	ppm Zn	% SiO2-x	% Al2O3-x	% Fe2O3-x	% MgO-x	% CaO-x	% Na2O-x	% K2O-x
559.22	38	35	12	20	88	14	8	750	9	430	13	2	170	29.7	8.51	3.07	1.63	23.8	0.46	1.52
559.57	37	22	14	17	73	11	8	910	7	460	13	2	210	28.8	8.23	2.78	1.51	26.0	0.42	1.46
559.90	33	21	13	15	76	10	7	1000	6	480	13	1	250	26.9	7.68	2.83	1.53	27.0	0.41	1.34
560.25	32	47	13	21	120	9	7	830	8	420	13	2	130	26.2	7.44	3.05	1.42	27.1	0.43	1.38
560.56	28	16	11	18	72	10	6	910	7	340	13	1	280	24.0	6.70	2.68	1.36	29.9	0.40	1.24
560.90	32	8	11	16	56	10	7	870	7	320	13	2	76	25.7	7.63	3.43	1.25	28.5	0.26	1.28
560.90	32	8	11	19	54	11	7	860	8	310	13	1	78	25.6	7.52	3.24	1.28	28.2	0.37	1.31
561.20	31	16	12	17	79	11	7	860	7	380	15	1	180	25.2	7.39	2.88	1.16	27.8	0.38	1.30
561.50	27	20	12	16	77	9	7	1000	6	400	13	1	390	24.4	6.98	2.76	1.17	29.3	0.37	1.28
562.00	28	15	11	12	60	8	7	1100	6	390	12	1	280	23.6	6.55	2.40	1.28	30.7	0.36	1.18
562.35	31	12	13	19	63	10	7	890	8	470	12	1	260	26.0	7.76	2.72	1.21	28.0	0.41	1.35
562.70	40	25	15	18	84	11	8	700	8	470	12	1	120	32.4	9.38	3.50	1.58	21.2	0.49	1.68
563.00	37	19	13	20	84	14	7	840	8	490	13	1	170	28.2	8.39	2.87	1.28	24.8	0.43	1.45
563.28	31	15	12	19	68	8	7	920	7	410	13	1	79	25.3	7.39	2.61	1.21	28.4	0.37	1.27
563.48	25	9	10	15	61	8	6	1000	6	350	12	1	130	21.5	6.07	2.27	1.02	33.0	0.32	1.03
563.67	23	15	9	15	64	7	5	1100	5	340	13	2	180	20.0	5.54	2.08	1.08	34.2	0.29	0.94
563.85	29	26	11	12	72	10	6	950	6	410	11	1	140	24.7	6.93	2.43	1.38	29.5	0.35	1.21
564.30	28	17	12	20	67	9	6	1000	7	450	12	1	320	22.3	6.59	2.21	1.20	31.9	0.34	1.10
564.65	33	28	13	12	81	10	7	830	8	510	11	1	160	25.5	8.07	2.61	1.27	27.7	0.35	1.23
564.94	34	30	14	13	85	10	7	750	8	500	11	1	180	27.0	8.13	2.93	1.32	26.1	0.44	1.41
565.30	32	24	12	12	75	6	7	890	7	450	11	1	280	24.9	7.30	2.52	1.31	28.9	0.36	1.26
565.63	27	34	11	23	74	10	6	980	6	380	15	1	210	21.0	6.16	2.15	1.23	32.6	0.32	1.04
565.95	24	13	10	17	57	5	5	1200	6	400	11	1	260	18.5	5.37	1.81	1.18	35.7	0.29	0.90
566.30	30	32	12	18	110	10	6	890	5	450	12	1	160	23.3	6.75	2.82	1.34	29.2	0.34	1.19
566.63	30	9	12	12	60	9	6	880	6	340	13	1	78	23.5	7.03	2.53	1.13	30.0	0.37	1.19
566.70	26	8	11	16	51	9	6	1000	6	310	13	1	76	20.3	6.21	2.52	1.01	33.2	0.34	1.00
566.98	31	14	12	16	70	13	6	960	8	390	12	1	68	22.0	7.08	2.62	1.00	30.4	0.37	1.08
567.02	32	10	12	18	67	10	6	960	8	430	14	2	150	23.0	6.80	2.48	1.06	30.6	0.36	1.15
567.19	28	25	13	19	100	8	7	910	7	510	15	2	250	23.1	6.86	2.79	1.09	29.3	0.37	1.22
567.62	34	22	14	14	92	10	7	790	7	530	13	2	290	26.3	7.86	2.86	1.26	27.0	0.40	1.37
567.85	37	26	16	20	96	9	8	710	8	530	13	1	320	29.8	8.86	3.31	1.41	23.5	0.45	1.58
568.28	37	23	16	16	87	11	8	780	8	510	13	2	270	27.4	8.35	2.90	1.28	26.0	0.46	1.44
568.61	36	43	15	14	110	10	8	820	8	490	13	2	270	25.9	8.11	2.98	1.15	26.4	0.44	1.35
568.91	35	20	16	18	79	9	7	830	7	470	13	2	190	26.5	8.12	2.86	1.21	26.7	0.43	1.40
569.20	40	15	18	20	89	12	8	730	9	470	15	1	150	28.2	9.00	3.40	1.11	24.5	0.47	1.49
569.50	39	59	15	21	130	12	7	830	8	520	13	2	270	25.0	8.08	2.99	1.10	26.7	0.44	1.26
570.00	33	33	15	23	91	8	7	870	7	480	13	2	280	24.5	7.41	2.91	1.19	28.9	0.42	1.28
570.20	34	42	14	16	82	6	7	910	7	440	11	1	160	23.8	7.37	2.68	1.06	29.3	0.37	1.22
570.67	26	45	13	17	79	5	6	1000	6	400	11	1	150	18.8	5.99	2.41	0.78	33.7	0.31	0.98
571.20	14	30	7	9	76	5	4	1300	4	290	9	1	120	11.5	3.42	1.64	0.43	40.9	0.20	0.64
571.36	16	84	8	11	120	5	4	1200	4	310	14	1	120	12.8	3.90	1.99	0.51	37.6	0.25	0.72
571.60	12	23	6	10	67	4	3	1400	<4	270	9	1	210	9.6	2.91	1.44	0.35	42.9	<0.15	0.56

Appendi III . Results of inorganic geochemical analyses of samples from the Niobrara Formation (depths of 559.2 to 611,03 feet) and Greenhorn Formation (depths of 962.07 to 991.07 feet) in the Amoco Bounds core.

Depth-ft	ppm Li	ppm Mo	ppm Nb	ppm Nd	ppm Ni	ppm Pb	ppm Sc	ppm Sr	ppm Th	ppm V	ppm Y	ppm Yb	ppm Zn	% SiO2-x	% Al2O3-x	% Fe2O3-x	% MgO-x	% CaO-x	% Na2O-x	% K2O-x
571.90	24	24	14	16	93	9	5	1100	6	550	9	1	270	18.3	5.56	2.37	0.83	34.1	0.35	1.03
572.25	17	14	9	7	74	4	5	1200	4	450	9	1	410	13.5	4.20	1.95	0.56	39.4	0.25	0.73
572.60	38	43	20	13	110	10	7	700	9	680	11	1	270	26.2	8.64	3.23	1.03	25.5	0.45	1.49
572.89	24	60	13	18	110	6	6	1000	7	540	11	1	270	17.9	5.72	2.36	0.72	33.3	0.27	0.94
573.62	16	69	9	17	110	5	4	1100	4	410	11	1	240	12.3	3.75	2.04	0.52	39.1	0.19	0.62
573.65	22	44	13	16	90	5	5	1000	7	550	10	1	230	17.5	5.43	2.34	0.75	33.9	0.27	0.91
574.00	22	12	12	12	56	8	5	1100	5	370	12	1	64	16.0	4.98	1.71	0.63	38.4	0.33	0.76
574.22	24	39	13	9	85	12	5	1100	6	490	9	1	190	17.8	5.64	2.31	0.76	34.3	0.27	0.93
574.60	26	100	14	7	110	8	5	970	7	390	9	1	230	16.8	5.62	2.21	0.80	32.8	0.27	0.91
574.96	12	3	5	<4	17	<4	3	1300	<4	170	9	1	11	9.2	2.75	0.79	0.33	46.6	<0.15	0.46
575.26	10	5	5	<4	25	<4	3	1300	<4	180	9	1	26	8.2	2.50	0.91	0.28	47.0	<0.15	0.42
575.68	12	22	7	11	58	<4	3	1300	<4	290	7	<1	140	9.1	2.96	1.41	0.31	44.2	<0.15	0.48
575.90	9	19	6	8	62	<4	3	1400	<4	290	5	<1	140	7.5	2.39	1.41	0.22	45.7	<0.15	0.39
576.07	14	37	8	11	89	<4	3	1200	4	360	9	<1	180	10.4	3.32	2.06	0.32	41.6	<0.15	0.59
576.32	7	5	4	<4	25	<4	2	1400	<4	190	6	<1	24	5.6	1.81	0.72	0.12	49.6	<0.15	0.28
576.40	8	29	5	9	51	<4	2	1400	<4	250	5	<1	210	6.0	1.92	1.15	0.15	47.0	<0.15	0.34
577.00	7	14	5	8	44	<4	2	1700	<4	250	6	<1	160	5.1	1.64	1.06	0.14	48.1	0.16	0.26
577.30	9	19	6	6	57	<4	2	1600	<4	340	5	<1	210	7.0	2.29	1.30	0.21	45.9	<0.15	0.39
577.70	10	17	6	<4	63	<4	2	1400	<4	280	5	<1	160	7.5	2.49	1.55	0.17	44.8	<0.15	0.42
578.00	10	3	5	9	16	<4	2	1400	<4	180	8	1	9	7.3	2.19	0.73	0.22	48.4	<0.15	0.37
578.70	16	24	9	11	71	<4	4	1200	<4	360	7	1	180	11.1	3.60	1.86	0.40	41.5	0.20	0.59
578.84	11	4	5	15	23	<4	2	1300	<4	190	8	1	16	7.6	2.32	0.86	0.24	48.0	<0.15	0.37
578.85	11	15	6	18	52	<4	3	1300	<4	280	5	<1	240	7.6	2.52	1.31	0.23	45.9	<0.15	0.38
579.15	47	49	21	12	120	8	7	710	7	710	7	1	230	26.6	9.34	3.79	0.95	24.5	0.52	1.44
579.42	17	30	9	16	75	<4	4	1200	<4	390	6	<1	180	12.1	4.00	2.10	0.39	40.3	0.18	0.66
579.75	8	14	5	8	49	<4	2	1500	<4	250	5	<1	160	6.3	1.93	1.23	0.16	47.1	<0.15	0.34
580.03	5	7	<4	14	33	<4	<2	1900	<4	190	5	<1	120	3.8	1.15	0.82	0.12	50.3	<0.15	0.19
580.42	4	7	<4	<4	26	<4	<2	1500	<4	120	5	<1	84	3.1	0.97	0.68	0.07	51.5	<0.15	0.17
580.77	6	2	<4	8	19	<4	<2	1300	<4	130	7	<1	21	4.4	1.38	0.70	0.12	50.8	<0.15	0.23
581.09	5	3	<4	<4	15	<4	<2	1300	<4	130	6	<1	16	4.3	1.43	0.55	0.07	50.9	<0.15	0.21
581.42	9	18	5	7	46	<4	2	1400	<4	220	6	<1	190	6.4	2.13	1.16	0.18	47.1	<0.15	0.34
581.75	13	27	7	10	59	<4	3	1200	<4	330	6	<1	190	9.7	3.25	1.50	0.32	43.3	0.19	0.48
582.12	13	17	7	11	54	4	3	1200	<4	330	7	<1	180	9.3	3.25	1.36	0.28	44.2	<0.15	0.51
582.31	17	21	10	9	65	4	4	1000	4	390	7	1	180	11.7	4.15	1.76	0.37	41.3	0.20	0.62
582.65	23	31	14	14	62	4	5	980	5	440	7	<1	120	15.6	5.70	1.85	0.51	37.0	0.24	0.75
583.10	11	21	7	19	58	<4	3	1300	4	340	8	<1	190	8.8	2.74	1.42	0.31	44.8	<0.15	0.47
583.40	10	21	6	13	52	<4	3	1400	<4	350	7	<1	150	8.3	2.54	1.17	0.29	45.4	0.18	0.43
583.75	5	13	4	4	41	<4	2	1600	<4	240	7	<1	110	4.1	1.50	0.93	0.07	49.1	<0.15	0.23
584.05	6	14	4	5	53	<4	2	1400	<4	250	6	<1	240	4.4	1.50	1.29	0.07	48.5	<0.15	0.26
584.38	23	33	12	15	72	<4	4	1100	6	490	7	1	110	14.5	6.35	1.94	0.36	37.1	0.25	0.63
584.67	19	35	10	18	77	4	4	1100	4	440	8	1	200	13.8	4.56	2.03	0.71	37.6	0.26	0.75
585.10	6	9	4	4	40	<4	2	1400	<4	230	8	1	170	5.1	1.75	1.11	0.11	48.5	<0.15	0.30

Appendi III . Results of inorganic geochemical analyses of samples from the Niobrara Formation (depths of 559.2 to 611,03 feet) and Greenhorn Formation (depths of 962.07 to 991.07 feet) in the Amoco Bounds core.

Depth-ft	ppm Li	ppm Mo	ppm Nb	ppm Nd	ppm Ni	ppm Pb	ppm Sc	ppm Sr	ppm Th	ppm V	ppm Y	ppm Yb	ppm Zn	% SiO2-x	% Al2O3-x	% Fe2O3-x	% MgO-x	% CaO-x	% Na2O-x	% K2O-x
585.40	13	23	7	10	87	4	3	1200	4	290	10	1	130	10.4	3.16	2.36	0.29	41.1	0.17	0.58
585.72	10	2	5	12	14	<4	3	1300	<4	210	11	1	23	8.2	2.44	0.71	0.26	47.6	<0.15	0.43
586.30	9	14	5	7	61	<4	3	1300	4	320	7	<1	290	7.5	2.42	1.61	0.22	45.5	<0.15	0.42
586.45	28	42	17	15	120	8	6	820	6	700	9	1	210	20.3	6.73	3.54	0.70	30.4	0.36	1.21
586.79	14	49	9	6	110	<4	4	1100	<4	460	8	<1	250	10.6	3.42	2.22	0.28	39.9	0.18	0.60
587.09	13	30	10	13	71	<4	4	1200	4	510	9	<1	220	9.7	3.33	1.64	0.26	42.2	0.18	0.54
587.22	14	29	9	11	81	5	4	1200	4	530	8	1	190	9.8	3.66	1.82	0.28	41.6	0.20	0.52
587.45	21	57	13	8	130	4	4	970	5	670	8	1	350	14.1	4.79	2.65	0.43	35.3	0.26	0.78
587.70	13	43	8	9	92	<4	3	1300	<4	440	8	<1	170	9.1	2.95	1.79	0.23	42.5	0.15	0.48
587.95	10	33	6	15	70	<4	3	1300	<4	350	7	1	240	7.2	2.29	1.41	0.19	45.3	<0.15	0.37
588.23	17	46	11	15	92	4	4	1100	5	540	8	1	200	12.3	3.95	1.91	0.36	39.9	0.23	0.68
588.23	16	44	13	9	90	<4	4	1100	4	550	8	1	180	12.2	3.99	1.95	0.30	40.1	0.16	0.67
588.50	25	55	14	10	110	5	5	900	5	650	9	<1	230	16.8	5.52	2.53	0.52	34.8	0.31	0.93
588.85	16	50	10	5	82	5	4	1200	<4	390	9	1	250	10.7	3.58	1.75	0.28	40.5	0.18	0.57
588.95	13	7	7	17	31	4	4	1400	<4	320	15	1	22	9.1	2.75	0.84	0.24	46.0	0.16	0.46
589.17	12	80	7	15	120	<4	3	1200	<4	390	13	1	170	7.8	2.53	1.84	0.22	41.4	<0.15	0.42
589.60	33	100	20	17	160	8	6	770	5	820	10	1	320	20.8	6.86	3.71	0.69	28.4	0.41	1.18
589.90	23	75	16	13	110	5	5	1000	4	650	10	1	240	16.0	5.35	2.43	0.50	34.5	0.27	0.92
590.30	19	23	12	17	57	8	5	1100	5	410	15	1	53	14.1	4.68	1.65	0.40	38.9	0.27	0.78
590.60	23	53	14	19	110	5	5	990	6	600	13	1	330	15.1	5.16	2.43	0.47	35.8	0.27	0.83
590.95	30	92	20	18	160	8	6	800	6	780	14	2	350	19.6	6.73	3.26	0.60	29.1	0.30	1.11
591.30	21	75	14	17	140	5	5	910	4	640	13	2	360	14.3	4.91	2.84	0.41	34.3	0.28	0.83
591.65	14	100	10	24	160	5	4	1000	<4	490	14	1	400	9.8	3.23	2.10	0.29	39.1	0.21	0.55
592.00	28	110	17	16	150	10	6	820	8	780	13	1	210	16.1	6.27	2.71	0.48	32.3	0.31	0.91
592.39	19	20	12	15	79	9	5	1000	<4	560	16	2	95	14.9	4.85	1.92	0.43	38.1	0.31	0.90
592.70	15	59	11	11	100	<4	4	1000	4	600	11	1	220	11.0	3.92	2.29	0.30	39.0	0.23	0.66
593.05	15	84	9	12	140	5	4	1100	4	610	11	1	240	10.8	3.52	2.38	0.32	37.9	0.25	0.66
593.38	24	9	17	17	42	14	4	890	7	820	14	1	37	18.2	6.43	1.72	0.64	36.7	0.35	1.08
593.75	7	12	4	13	49	<4	2	1400	<4	290	8	<1	240	5.5	1.76	1.22	0.07	47.7	<0.15	0.35
593.75	6	12	4	4	50	<4	2	1400	<4	300	8	<1	230	5.5	1.82	1.31	0.07	48.2	<0.15	0.32
594.23	6	19	4	12	53	<4	<2	1400	<4	270	7	<1	200	4.3	1.31	1.13	0.11	48.5	<0.15	0.27
594.55	9	19	6	8	74	<4	2	1300	<4	390	7	<1	370	7.4	2.20	1.65	0.18	44.1	0.22	0.49
594.77	18	6	8	9	41	9	4	990	<4	460	13	1	34	15.5	4.41	1.24	0.43	40.3	0.25	0.91
594.92	7	8	4	14	34	<4	2	1400	<4	210	8	<1	35	5.6	1.67	0.89	0.14	48.9	<0.15	0.31
595.25	4	7	4	8	33	<4	<2	1600	<4	160	7	<1	73	3.3	1.06	0.80	0.07	50.2	<0.15	0.22
595.60	15	3	7	10	15	4	3	1200	<4	370	9	<1	16	11.6	3.74	0.83	0.35	44.3	0.23	0.64
595.80	13	21	6	13	69	4	3	1200	<4	340	9	<1	100	10.4	3.33	1.84	0.36	42.1	0.24	0.61
595.87	6	28	4	5	54	<4	2	1400	<4	210	7	<1	130	4.9	1.57	1.24	0.11	47.9	0.15	0.30
596.15	14	51	6	10	93	4	3	1100	5	350	8	<1	110	10.5	3.15	1.96	0.30	40.7	<0.15	0.62
596.30	7	5	4	12	16	<4	2	1400	<4	200	7	<1	27	5.7	1.72	0.62	0.17	49.8	<0.15	0.35
596.65	3	4	4	4	15	<4	<2	1700	<4	110	7	1	18	2.7	0.81	0.52	0.07	52.4	<0.15	0.15
597.00	3	58	4	4	53	<4	<2	1600	<4	120	6	<1	72	2.6	0.79	0.93	0.07	50.1	<0.15	0.15

Appendi III . Results of inorganic geochemical analyses of samples from the Niobrara Formation (depths of 559.2 to 611,03 feet) and Greenhom Formation (depths of 962.07 to 991.07 feet) in the Amoco Bounds core.

Depth-ft	ppm Li	ppm Mo	ppm Nb	ppm Nd	ppm Ni	ppm Pb	ppm Sc	ppm Sr	ppm Th	ppm V	ppm Y	ppm Yb	ppm Zn	% SiO2-x	% Al2O3-x	% Fe2O3-x	% MgO-x	% CaO-x	% Na2O-x	% K2O-x
597.40	13	45	7	8	110	5	3	1100	<4	410	8	1	150	11.5	3.38	2.49	0.31	39.5	<0.15	0.70
597.68	7	40	4	4	91	<4	2	1300	<4	260	7	<1	430	6.2	1.83	1.85	0.12	45.5	<0.15	0.37
597.95	7	35	4	8	84	<4	2	1300	<4	210	8	<1	170	5.2	1.56	1.43	0.12	46.7	0.17	0.29
598.29	11	16	5	10	54	4	3	1200	5	300	9	<1	190	8.6	2.81	1.27	0.22	45.0	<0.15	0.53
598.61	9	11	5	8	57	4	3	1300	<4	320	7	<1	99	7.6	2.37	1.22	0.19	44.5	0.23	0.49
599.05	8	2	4	11	14	<4	2	1400	<4	180	9	1	17	7.1	1.97	0.60	0.14	48.9	<0.15	0.40
599.20	6	26	4	4	64	6	2	1300	<4	170	10	<1	150	5.4	1.53	1.42	0.11	46.7	<0.15	0.35
599.28	7	34	4	12	58	<4	<2	1400	<4	190	8	<1	120	5.6	1.61	1.19	0.14	47.0	<0.15	0.36
599.35	6	32	4	6	66	<4	2	1500	<4	170	7	<1	180	5.0	1.44	1.31	0.13	47.1	<0.15	0.33
599.50	8	3	4	13	14	<4	2	1400	<4	190	8	<1	14	6.3	1.86	0.61	0.18	49.5	<0.15	0.39
599.62	16	49	5	16	110	9	3	980	4	300	10	1	130	12.5	3.49	2.64	0.41	37.6	0.20	0.74
599.80	13	5	6	12	16	<4	3	1200	<4	250	11	1	21	10.4	2.96	0.86	0.35	45.7	0.19	0.56
599.95	8	18	4	8	53	<4	3	1400	<4	200	9	<1	120	6.9	2.08	1.24	0.19	46.9	<0.15	0.42
600.15	6	21	4	8	53	<4	2	1400	<4	210	7	<1	340	5.1	1.65	1.22	0.11	47.1	<0.15	0.37
600.40	15	47	6	11	99	8	3	990	<4	290	11	<1	170	11.9	3.46	2.36	0.35	38.0	0.20	0.72
600.50	10	3	5	11	12	<4	3	1200	<4	190	11	1	18	8.8	2.59	0.71	0.26	47.5	<0.15	0.50
600.71	11	14	4	18	58	7	3	1200	<4	160	14	1	62	9.0	2.50	1.64	0.24	43.6	<0.15	0.52
600.80	6	27	4	14	53	11	<2	1600	<4	100	8	<1	160	4.5	1.31	1.53	0.13	47.5	<0.15	0.27
600.80	5	27	4	4	53	9	<2	1600	<4	100	8	<1	160	4.4	1.34	1.59	0.07	47.8	<0.15	0.26
600.93	7	7	4	4	31	<4	<2	1400	<4	130	7	<1	71	5.8	1.75	0.80	0.16	48.4	<0.15	0.35
601.15	11	2	4	5	12	4	2	1200	<4	160	13	1	20	8.6	2.56	0.64	0.26	47.5	0.15	0.45
601.35	10	<2	4	16	11	<4	2	1300	<4	150	15	1	30	8.0	2.39	0.62	0.23	47.9	<0.15	0.48
601.50	8	2	4	16	14	<4	2	1300	<4	140	14	2	21	6.4	1.95	0.59	0.19	49.5	<0.15	0.38
601.70	6	8	4	6	35	<4	2	1400	<4	140	8	1	63	4.9	1.63	0.79	0.11	49.3	<0.15	0.30
601.80	17	62	7	12	110	23	3	1100	11	450	8	<1	190	10.9	5.09	2.23	0.31	37.5	0.19	0.52
601.95	21	79	9	13	140	11	5	930	8	560	10	1	180	12.9	6.02	2.57	0.35	34.5	0.22	0.60
602.30	9	<2	4	10	16	<4	3	1200	<4	75	13	1	240	6.8	2.05	0.80	0.21	49.5	<0.15	0.37
602.30	10	2	4	13	17	<4	3	1200	<4	75	14	2	250	6.9	1.99	0.73	0.22	49.0	<0.15	0.40
603.14	7	2	4	15	24	<4	<2	1400	<4	71	10	1	33	5.7	1.61	0.72	0.19	49.7	<0.15	0.32
604.25	12	79	4	8	230	15	3	1000	<4	210	7	<1	310	10.0	2.73	2.92	0.33	37.8	0.17	0.61
604.59	10	<2	4	8	20	<4	3	1200	<4	110	13	1	34	7.5	2.00	0.68	0.31	48.7	<0.15	0.41
604.92	11	2	4	14	46	4	2	1300	<4	95	7	<1	84	8.6	2.20	0.86	0.37	47.5	<0.15	0.46
605.29	13	3	4	11	34	<4	3	1000	<4	71	15	1	35	9.0	2.44	1.03	0.45	47.1	<0.15	0.49
605.63	23	<2	8	11	100	9	5	970	5	110	14	1	150	17.8	5.20	1.28	1.00	38.8	0.26	0.98
606.05	8	<2	4	6	12	<4	2	980	<4	25	8	<1	13	5.8	1.61	0.55	0.31	50.1	<0.15	0.31
606.35	7	<2	4	10	14	<4	<2	1000	<4	25	8	<1	41	5.6	1.46	0.57	0.27	50.4	<0.15	0.30
606.70	9	<2	4	4	35	<4	2	1100	4	32	8	<1	43	7.1	1.86	0.89	0.32	48.9	<0.15	0.39
607.06	9	<2	4	11	15	<4	2	1200	4	33	8	1	29	6.5	1.89	0.81	0.34	49.0	<0.15	0.34
607.40	7	<2	4	4	11	<4	<2	1200	<4	21	10	1	15	4.7	1.50	0.48	0.24	51.0	<0.15	0.26
607.76	10	<2	4	10	14	<4	3	1200	<4	41	12	1	21	7.2	2.20	0.52	0.37	48.9	<0.15	0.38
608.05	27	<2	9	23	53	11	5	920	6	150	24	2	75	21.2	5.94	1.71	1.49	35.3	0.31	1.17
608.43	17	<2	5	17	81	12	4	1100	5	170	8	<1	220	13.2	3.84	1.77	0.58	40.5	0.18	0.80

Appendi III . Results of inorganic geochemical analyses of samples from the Niobrara Formation (depths of 559.2 to 611,03 feet) and Greenhorn Formation (depths of 962.07 to 991.07 feet) in the Amoco Bounds core.

Depth-ft	ppm Li	ppm Mo	ppm Nb	ppm Nd	ppm Ni	ppm Pb	ppm Sc	ppm Sr	ppm Th	ppm V	ppm Y	ppm Yb	ppm Zn	% SiO2-x	% Al2O3-x	% Fe2O3-x	% MgO-x	% CaO-x	% Na2O-x	% K2O-x
608.76	8	<2	4	9	15	<4	2	1500	<4	47	9	<1	18	5.9	1.63	0.76	0.30	49.8	<0.15	0.33
609.12	6	<2	4	16	11	<4	<2	1600	<4	38	9	1	14	4.7	1.23	0.51	0.26	51.2	<0.15	0.27
611.03	8	3	4	9	14	<4	2	1400	<4	140	9	1	93	6.5	2.07	0.62	0.21	48.9	0.19	0.32
962.07	17	18	9	6	56	9	4	930	4	180	7	<1	79	21.5	4.91	1.44	0.87	33.7	0.43	1.00
962.47	5	<2	4	4	3	<4	<2	480	<4	16	3	<1	4	2.7	0.81	0.35	0.27	52.7	<0.15	0.07
963.39	22	18	9	7	67	7	5	810	4	240	8	1	88	23.8	5.34	1.33	0.91	32.1	0.43	0.97
963.64	9	<2	4	5	9	<4	<2	1000	<4	72	6	<1	26	13.0	1.70	0.46	0.35	45.7	0.16	0.30
963.98	14	4	5	6	41	6	3	1100	<4	140	6	<1	67	17.4	3.34	0.99	0.71	38.5	0.35	0.63
964.45	11	<2	4	5	27	7	2	1100	<4	73	5	<1	46	14.1	2.61	0.84	0.49	42.2	0.29	0.51
964.85	10	<2	4	4	4	<4	<2	880	<4	36	6	<1	13	11.2	1.55	0.59	0.37	47.1	0.16	0.28
965.15	16	3	6	6	25	7	4	960	5	67	6	<1	47	19.9	4.28	1.41	0.78	35.6	0.42	0.83
965.65	18	3	6	7	28	7	4	1000	4	75	7	<1	46	20.8	4.35	1.15	0.75	35.6	0.42	0.83
965.90	12	<2	4	6	10	<4	2	950	<4	44	8	1	28	13.7	2.48	0.70	0.47	44.2	0.26	0.43
966.14	14	<2	6	8	17	5	3	990	<4	63	9	<1	78	18.6	3.63	0.86	0.57	39.4	0.37	0.65
966.47	19	4	9	13	42	10	4	930	5	110	8	<1	51	22.5	5.70	1.32	0.85	32.3	0.50	0.95
966.77	110	5	17	12	6	36	3	530	63	29	4	1	67	53.2	22.70	1.42	3.19	1.9	2.31	0.65
967.50	11	<2	4	6	12	5	2	1000	<4	35	9	1	21	13.6	2.22	0.58	0.37	43.9	0.25	0.38
967.77	9	<2	4	4	5	<4	<2	1100	<4	20	7	<1	16	12.1	1.40	0.41	0.28	46.5	0.15	0.24
968.25	15	<2	6	7	17	4	3	980	<4	47	8	<1	54	17.3	3.57	0.99	0.64	39.9	0.42	0.64
968.57	27	<2	9	10	36	13	5	860	7	130	9	1	65	26.6	6.99	1.45	1.03	29.8	0.65	1.14
968.88	22	<2	7	12	17	5	5	940	5	93	11	1	49	23.9	4.64	1.29	1.18	35.0	0.49	0.84
969.55	33	5	10	12	57	9	6	760	7	190	8	1	130	31.2	7.47	1.69	1.19	24.5	0.60	1.32
969.94	20	5	6	9	40	6	5	980	4	110	9	<1	64	21.8	4.86	1.41	0.84	34.0	0.52	0.94
970.41	16	7	5	5	36	5	4	1100	5	88	5	<1	61	17.4	4.18	1.42	0.62	37.1	0.46	0.82
970.71	6	2	4	4	4	<4	<2	840	<4	36	3	<1	7	5.2	0.95	1.05	0.26	50.5	<0.15	0.16
970.87	10	<2	4	4	15	<4	2	1000	<4	40	4	<1	22	12.5	2.25	0.87	0.42	43.9	0.25	0.43
971.07	16	2	4	4	22	6	3	1200	<4	63	5	<1	37	15.3	3.73	1.10	0.64	39.7	0.35	0.63
971.31	9	<2	4	4	6	<4	2	1200	<4	39	5	<1	22	10.4	2.06	0.58	0.40	46.8	0.23	0.33
971.58	13	<2	4	5	21	4	4	1100	<4	55	6	<1	72	14.2	3.16	1.04	0.54	40.9	0.35	0.57
971.67	15	2	6	6	27	4	4	1000	4	72	6	<1	50	17.2	4.34	1.63	0.63	37.1	0.51	0.74
971.95	14	<2	5	7	24	7	3	1100	4	61	6	<1	40	16.3	3.83	1.42	0.62	38.0	0.39	0.67
972.02	16	<2	6	6	22	<4	4	1000	5	65	6	<1	44	18.0	3.98	1.24	0.66	37.6	0.41	0.72
972.15	17	3	6	5	24	5	4	1200	5	66	6	<1	51	18.1	4.04	1.42	0.73	36.7	0.39	0.75
972.23	13	<2	4	6	18	<4	3	1200	<4	47	5	<1	46	14.7	3.03	1.06	0.54	40.8	0.31	0.55
972.30	11	<2	4	4	14	<4	3	1100	4	37	5	<1	23	13.0	2.26	0.99	0.43	43.5	0.21	0.42
972.36	10	<2	4	4	6	<4	<2	1000	4	29	4	<1	15	12.8	1.70	0.63	0.32	45.6	0.19	0.30
972.54	9	<2	4	4	3	<4	<2	890	<4	26	5	<1	15	10.4	1.37	0.76	0.30	47.6	0.16	0.24
972.62	12	<2	4	4	4	<4	<2	1000	<4	28	6	<1	28	14.2	1.99	0.61	0.37	44.9	0.21	0.35
972.70	12	<2	4	4	7	<4	2	1100	<4	29	6	<1	26	15.0	2.23	0.81	0.39	43.4	0.26	0.40
972.76	12	<2	4	4	13	<4	2	1100	<4	34	6	<1	61	14.5	2.56	1.05	0.44	42.0	0.29	0.47
972.84	15	2	4	5	16	<4	3	1100	4	47	7	<1	46	16.9	3.50	1.17	0.64	38.9	0.40	0.61
972.90	18	<2	5	7	19	5	4	1100	5	57	7	<1	51	19.1	4.12	1.32	0.75	36.5	0.38	0.73

Appendi III . Results of inorganic geochemical analyses of samples from the Niobrara Formation (depths of 559.2 to 611,03 feet) and Greenhorn Formation (depths of 962.07 to 991.07 feet) in the Amoco Bounds core.

Depth-ft	ppm Li	ppm Mo	ppm Nb	ppm Nd	ppm Ni	ppm Pb	ppm Sc	ppm Sr	ppm Th	ppm V	ppm Y	ppm Yb	ppm Zn	% SiO2-x	% Al2O3-x	% Fe2O3-x	% MgO-x	% CaO-x	% Na2O-x	% K2O-x
973.03	23	2	7	5	23	7	5	1100	6	75	7	1	44	24.9	5.71	1.57	0.90	31.1	0.47	1.03
973.13	31	3	10	7	30	10	6	850	7	100	7	<1	78	32.1	7.52	2.05	1.23	24.2	0.54	1.38
973.13	31	3	11	7	32	21	6	860	7	100	7	1	82	31.9	7.49	2.06	1.19	24.2	0.51	1.37
973.22	22	2	7	8	24	6	5	1100	6	76	7	<1	50	24.1	5.51	1.52	1.01	31.4	0.41	0.95
973.40	34	2	11	10	33	12	7	890	8	110	7	1	67	33.8	8.14	2.07	1.26	22.5	0.59	1.47
973.53	31	4	11	10	36	9	6	890	8	100	7	1	85	30.9	7.48	1.86	1.17	25.2	0.53	1.33
973.72	11	<2	4	6	4	<4	2	1200	<4	28	9	1	32	14.0	1.85	0.57	0.34	45.3	0.20	0.31
974.00	12	<2	4	7	15	<4	3	1300	4	39	9	<1	33	14.2	2.66	0.88	0.45	41.2	0.26	0.50
974.38	35	3	12	10	26	13	6	700	9	110	8	1	70	39.5	9.15	2.34	1.61	17.9	0.67	1.71
974.66	14	<2	5	5	12	<4	3	1900	<4	44	8	<1	36	15.3	3.62	0.99	0.72	39.3	0.27	0.56
975.55	17	<2	7	12	7	7	4	1300	5	41	13	2	82	16.4	3.79	1.05	0.67	41.2	0.41	0.64
975.55	17	<2	7	13	8	7	4	1300	5	40	13	1	110	16.4	3.78	1.08	0.68	41.2	0.36	0.65
976.28	70	<2	16	9	2	15	3	620	56	13	3	<1	41	54.3	21.70	0.98	3.39	1.6	2.59	0.55
976.43	7	<2	4	15	2	<4	<2	1800	<4	8	18	2	10	9.3	1.05	0.34	0.22	48.6	<0.15	0.14
977.37	6	<2	4	10	5	<4	2	1000	<4	15	10	<1	11	7.3	1.18	0.49	0.29	49.2	<0.15	0.18
977.73	25	<2	9	10	10	4	6	1200	5	64	11	1	42	26.4	4.84	1.28	0.86	34.2	0.52	0.83
977.91	31	3	14	10	36	11	7	760	7	120	8	1	64	34.9	8.13	2.51	1.15	21.2	0.66	1.48
978.40	25	3	9	8	31	7	6	1100	5	82	9	<1	61	24.9	5.95	2.11	0.95	28.7	0.50	1.03
978.75	9	<2	4	4	3	<4	2	860	<4	21	7	<1	20	7.4	1.37	0.59	0.36	49.4	0.15	0.21
979.05	41	<2	14	12	32	10	8	660	8	110	8	<1	79	39.6	8.93	2.52	1.40	18.5	0.68	1.63
979.19	22	<2	5	8	8	<4	7	1100	<4	52	10	1	62	24.7	3.96	1.14	0.78	36.0	0.42	0.70
979.45	26	<2	10	11	29	9	9	890	5	110	9	<1	54	29.9	7.38	2.55	1.02	24.3	0.63	1.22
980.06	12	<2	4	6	11	<4	12	770	<4	46	14	2	30	13.8	3.22	1.58	0.58	42.8	0.36	0.38
980.86	7	<2	4	4	6	<4	3	480	<4	22	5	<1	9	6.8	1.36	1.22	0.39	49.1	<0.15	0.19
982.03	20	<2	6	19	43	4	14	790	4	58	24	3	46	18.3	5.90	1.79	0.84	37.7	0.64	0.71
982.03	20	<2	6	19	43	4	14	790	5	59	24	3	47	18.3	5.96	1.84	0.79	38.0	0.55	0.69
982.25	130	<2	19	19	9	40	8	520	19	28	6	<1	66	54.0	21.40	1.70	3.90	0.9	2.24	0.57
982.42	58	<2	59	8	200	8	31	520	4	220	5	<1	98	39.4	16.70	8.52	1.98	9.4	1.76	0.97
983.10	10	<2	4	7	13	<4	4	700	<4	27	16	1	18	9.2	2.50	0.92	0.44	47.2	0.29	0.31
983.22	30	<2	13	13	33	10	9	790	9	75	12	1	45	26.8	9.97	3.23	1.14	27.9	0.87	1.16
983.40	11	<2	4	8	8	<4	4	990	<4	29	11	1	35	13.4	3.30	0.92	0.48	43.8	0.40	0.53
983.66	7	<2	4	4	5	<4	2	950	<4	18	9	<1	10	7.9	1.49	0.68	0.29	49.0	0.18	0.24
983.90	13	<2	4	5	19	4	4	1000	<4	41	8	1	23	15.1	3.50	1.43	0.49	40.8	0.38	0.63
984.33	17	<2	6	12	15	5	6	1200	5	73	11	1	33	18.5	5.02	1.27	0.83	38.7	0.54	0.84
984.33	16	<2	6	11	15	5	6	1200	<4	73	11	1	36							
984.80	34	3	9	17	51	8	8	820	8	180	11	1	61	30.4	8.75	1.82	1.21	25.1	0.62	1.40
985.23	26	4	8	10	44	5	6	1100	6	110	9	1	64	23.7	6.45	1.74	1.05	31.5	0.55	1.15
985.38	23	<2	7	8	35	8	6	1000	5	86	8	1	46	21.7	5.85	1.55	0.75	34.0	0.54	1.09
985.50	11	<2	4	6	7	<4	4	1000	4	39	10	1	19	11.5	2.97	0.88	0.42	45.3	0.32	0.50
985.61	12	<2	4	5	5	<4	3	1100	<4	38	10	1	18	11.3	2.82	0.71	0.40	45.7	0.30	0.48
985.80	13	<2	4	8	12	<4	3	1100	4	46	9	<1	31	12.7	3.24	0.80	0.41	43.9	0.33	0.56
985.95	16	<2	6	7	31	7	4	1100	6	76	8	<1	49	16.5	4.89	1.26	0.55	38.9	0.47	0.82

Appendi III . Results of inorganic geochemical analyses of samples from the Niobrara Formation (depths of 559.2 to 611,03 feet) and Greenhom Formation (depths of 962.07 to 991.07 feet) in the Amoco Bounds core.

Depth-ft	ppm Li	ppm Mo	ppm Nb	ppm Nd	ppm Ni	ppm Pb	ppm Sc	ppm Sr	ppm Th	ppm V	ppm Y	ppm Yb	ppm Zn	% SiO2-x	% Al2O3-x	% Fe2O3-x	% MgO-x	% CaO-x	% Na2O-x	% K2O-x
986.14	18	<2	6	10	28	4	5	1200	5	74	9	<1	47	16.8	4.62	1.17	0.61	39.4	0.45	0.78
986.73	20	<2	7	15	15	6	5	880	4	56	13	1	30	17.3	4.92	1.30	0.62	39.6	0.42	0.84
987.22	25	3	8	12	29	10	6	940	5	86	10	1	65	21.6	6.61	1.80	0.76	32.7	0.43	1.04
987.73	34	6	10	10	51	10	7	780	5	120	9	1	59	30.3	7.57	1.94	1.16	26.2	0.44	1.48
988.12	16	<2	5	9	13	6	4	1000	4	45	12	1	22	14.0	4.12	1.07	0.48	42.3	0.32	0.70
988.71	38	6	11	15	47	11	7	610	5	130	10	1	63	34.4	8.45	2.06	1.18	23.1	0.44	1.65
989.48	40	16	12	17	77	12	8	680	7	180	12	1	66	33.6	9.04	2.17	1.13	22.9	0.46	1.70
990.27	43	7	13	13	58	11	8	690	8	160	10	1	64	33.7	9.53	2.15	1.11	22.8	0.57	1.79
990.55	24	<2	7	11	17	6	5	970	5	73	12	1	44	20.0	5.43	1.25	0.75	37.2	0.38	0.98
991.07	40	22	12	18	78	13	8	610	7	200	13	1	81	37.1	9.60	2.41	1.30	20.3	0.49	1.87

Appendi III . Results of inorganic geochemical analyses of samples from the Niobrara Formation (depths of 559.2 to 611,03 feet) and Greenhorn Formation (depths of 962.07 to 991.07 feet) in the Amoco Bounds core.

Depth-ft	% TiO2-x	% P2O5-x	% MnO-x	LOI 925C
559.22	0.36	0.12	0.01	27.6
559.57	0.35	0.13	0.02	26.9
559.90	0.34	0.14	0.02	27.5
560.25	0.34	0.12	0.02	27.8
560.56	0.29	0.10	0.01	29.0
560.90	0.30	0.08	<0.01	26.7
560.90	0.33	0.12	0.01	27.6
561.20	0.32	0.16	0.01	28.9
561.50	0.31	0.12	0.01	28.8
562.00	0.27	0.11	0.02	29.6
562.35	0.32	0.10	0.01	28.0
562.70	0.40	0.13	0.02	25.6
563.00	0.36	0.13	0.01	28.8
563.28	0.31	0.12	0.01	28.8
563.48	0.26	0.12	0.01	30.9
563.67	0.23	0.12	0.01	32.1
563.85	0.29	0.11	0.01	29.3
564.30	0.28	0.12	0.01	30.4
564.65	0.31	0.11	0.01	29.1
564.94	0.34	0.12	0.01	29.3
565.30	0.30	0.11	0.01	29.1
565.63	0.26	0.16	0.01	31.5
565.95	0.22	0.09	0.01	33.1
566.30	0.30	0.12	0.01	29.7
566.63	0.31	0.13	0.01	29.6
566.70	0.25	0.12	0.01	30.9
566.98	0.28	0.12	0.01	30.4
567.02	0.29	0.13	0.01	29.8
567.19	0.29	0.15	0.01	30.0
567.62	0.33	0.13	0.01	28.2
567.85	0.38	0.13	0.01	27.6
568.28	0.37	0.12	0.01	28.4
568.61	0.37	0.12	0.01	28.6
568.91	0.37	0.13	0.01	29.2
569.20	0.43	0.15	0.01	28.4
569.50	0.36	0.12	0.01	29.0
570.00	0.32	0.12	0.01	28.8
570.20	0.32	0.10	0.01	29.5
570.67	0.27	0.11	0.01	32.5
571.20	0.15	0.09	0.01	37.6
571.36	0.19	0.19	0.01	37.7
571.60	0.12	0.08	0.01	38.6

Appendi III . Results of inorganic geochemical analyses of samples from the Niobrara Formation (depths of 559.2 to 611,03 feet) and Greenhorn Formation (depths of 962.07 to 991.07 feet) in the Amoco Bounds core.

Depth-ft	% TiO2-x	% P2O5-x	% MnO-x	LOI 925C
571.90	0.25	0.10	0.01	32.4
572.25	0.17	0.07	0.01	35.3
572.60	0.41	0.13	0.01	29.8
572.89	0.26	0.10	0.01	34.1
573.62	0.18	0.11	0.01	37.6
573.65	0.23	0.10	0.01	34.2
574.00	0.23	0.13	0.01	33.9
574.22	0.26	0.11	0.01	33.5
574.60	0.29	0.10	0.01	35.9
574.96	0.12	0.07	0.02	38.1
575.26	0.11	0.08	0.02	38.7
575.68	0.13	0.08	0.01	38.7
575.90	0.11	0.05	0.01	39.4
576.07	0.16	0.13	0.01	37.4
576.32	0.07	<0.05	0.01	40.5
576.40	0.08	0.05	0.01	40.8
577.00	0.07	0.07	0.01	40.9
577.30	0.10	0.06	0.01	39.8
577.70	0.11	0.06	0.01	39.5
578.00	0.10	0.07	0.02	39.1
578.70	0.16	0.07	0.01	36.7
578.84	0.11	0.07	0.01	38.8
578.85	0.11	0.05	0.01	39.3
579.15	0.45	0.10	0.01	28.2
579.42	0.18	0.07	0.01	36.0
579.75	0.08	<0.05	0.01	39.9
580.03	0.05	<0.05	0.02	41.7
580.42	0.04	<0.05	0.02	42.1
580.77	0.06	0.07	0.02	40.9
581.09	0.05	<0.05	0.02	40.8
581.42	0.09	0.06	0.02	40.1
581.75	0.13	0.05	0.01	38.2
582.12	0.11	0.05	0.01	38.2
582.31	0.15	0.06	0.01	36.5
582.65	0.20	0.05	0.01	34.8
583.10	0.11	0.07	0.01	38.7
583.40	0.10	<0.05	0.01	39.5
583.75	0.04	<0.05	0.01	41.5
584.05	0.05	<0.05	0.01	40.8
584.38	0.16	<0.05	0.01	35.0
584.67	0.18	0.07	0.01	36.0
585.10	0.06	0.06	0.02	40.7

Appendi III . Results of inorganic geochemical analyses of samples from the Niobrara Formation (depths of 559.2 to 611,03 feet) and Greenhom Formation (depths of 962.07 to 991.07 feet) in the Amoco Bounds core.

Depth-ft	% TiO2-x	% P2O5-x	% MnO-x	LOI 925C
585.40	0.14	0.13	0.01	37.0
585.72	0.10	0.07	0.02	38.8
586.30	0.10	0.08	0.01	38.9
586.45	0.33	0.09	0.01	30.5
586.79	0.14	0.08	0.01	38.0
587.09	0.14	0.07	0.01	38.3
587.22	0.14	0.08	0.01	38.0
587.45	0.22	0.08	0.01	35.8
587.70	0.13	0.06	0.01	39.0
587.95	0.10	<0.05	0.01	40.0
588.23	0.18	0.06	0.01	37.0
588.23	0.17	<0.05	<0.01	36.8
588.50	0.25	0.08	0.01	33.9
588.85	0.15	0.06	0.01	38.6
588.95	0.12	0.15	0.02	39.3
589.17	0.13	0.13	0.01	41.4
589.60	0.33	0.08	0.01	32.4
589.90	0.24	0.08	0.01	34.5
590.30	0.20	0.13	0.01	35.5
590.60	0.23	0.10	0.01	35.3
590.95	0.28	0.12	0.02	33.7
591.30	0.19	0.10	0.01	35.6
591.65	0.14	0.10	0.01	39.8
592.00	0.25	0.09	0.02	35.5
592.39	0.21	0.13	0.01	34.5
592.70	0.15	0.07	0.02	37.6
593.05	0.14	0.09	0.01	38.0
593.38	0.33	0.20	0.02	31.7
593.75	0.06	0.08	0.02	40.8
593.75	0.04	<0.05	<0.01	40.5
594.23	0.05	0.05	0.02	41.3
594.55	0.08	0.06	0.01	39.3
594.77	0.20	0.14	0.02	34.7
594.92	0.06	0.07	0.02	40.6
595.25	0.04	<0.05	0.02	41.7
595.60	0.14	0.10	0.02	36.5
595.80	0.11	0.13	0.02	36.9
595.87	0.06	0.08	0.02	40.9
596.15	0.12	0.11	0.01	38.5
596.30	0.07	0.07	0.03	40.4
596.65	0.03	0.06	0.03	42.3
597.00	0.03	0.09	0.02	43.3

Appendi III . Results of inorganic geochemical analyses of samples from the Niobrara Formation (depths of 559.2 to 611,03 feet) and Greenhorn Formation (depths of 962.07 to 991.07 feet) in the Amoco Bounds core.

Depth-ft	% TiO2-x	% P2O5-x	% MnO-x	LOI 925C
597.40	0.12	0.10	<0.01	37.0
597.68	0.07	0.10	0.02	40.0
597.95	0.07	0.09	0.02	40.6
598.29	0.10	0.11	0.02	38.7
598.61	0.11	0.08	0.02	39.9
599.05	0.08	0.08	0.02	39.4
599.20	0.06	0.13	0.02	40.6
599.28	0.07	0.09	0.02	40.9
599.35	0.06	0.07	0.02	41.1
599.50	0.07	0.07	0.03	40.0
599.62	0.15	0.12	0.02	36.8
599.80	0.12	0.09	0.03	37.3
599.95	0.08	0.09	0.02	39.8
600.15	0.07	0.07	0.02	41.7
600.40	0.14	0.16	0.02	37.7
600.50	0.10	0.07	0.03	38.3
600.71	0.11	0.19	0.02	38.8
600.80	0.05	0.08	0.02	41.0
600.80	0.03	0.07	0.02	41.0
600.93	0.07	0.06	0.02	40.7
601.15	0.09	0.07	0.03	38.5
601.35	0.08	0.10	0.03	38.9
601.50	0.07	0.08	0.03	39.9
601.70	0.05	<0.05	0.02	41.0
601.80	0.12	0.10	0.01	37.8
601.95	0.15	0.11	0.01	37.1
602.30	0.04	0.06	0.02	39.0
602.30	0.07	0.09	0.04	39.1
603.14	0.06	0.08	0.03	40.3
604.25	0.12	0.10	0.02	39.3
604.59	0.08	0.14	0.08	39.0
604.92	0.08	0.08	0.05	38.5
605.29	0.09	0.26	0.12	37.4
605.63	0.20	0.18	0.08	32.6
606.05	0.06	0.10	0.14	40.1
606.35	0.06	0.08	0.12	40.1
606.70	0.07	0.08	0.10	39.0
607.06	0.07	0.07	0.09	39.2
607.40	0.05	0.12	0.12	40.7
607.76	0.07	0.07	0.09	39.4
608.05	0.25	0.26	0.08	30.6
608.43	0.15	0.08	0.03	35.8

Appendi III . Results of inorganic geochemical analyses of samples from the Niobrara Formation (depths of 559.2 to 611,03 feet) and Greenhorn Formation (depths of 962.07 to 991.07 feet) in the Amoco Bounds core.

Depth-ft	% TiO2-x	% P2O5-x	% MnO-x	LOI 925C
608.76	0.06	0.07	0.06	40.0
609.12	0.05	<0.05	0.06	40.9
611.03	0.08	0.06	0.03	39.8
962.07	0.19	0.09	<0.01	32.7
962.47	0.02	<0.05	0.04	42.1
963.39	0.20	0.07	<0.01	32.4
963.64	0.07	<0.05	0.01	37.1
963.98	0.14	0.07	<0.01	35.5
964.45	0.11	0.07	0.01	36.9
964.85	0.06	<0.05	0.02	37.7
965.15	0.17	0.08	<0.01	33.7
965.65	0.18	0.08	<0.01	33.7
965.90	0.09	0.06	0.02	36.0
966.14	0.15	0.07	0.01	34.1
966.47	0.22	0.09	0.01	33.0
966.77	0.30	0.09	<0.01	13.6
967.50	0.09	<0.05	0.01	37.3
967.77	0.05	<0.05	0.02	37.9
968.25	0.15	0.09	0.01	34.3
968.57	0.27	0.11	<0.01	29.5
968.88	0.21	0.10	0.02	30.3
969.55	0.30	0.10	<0.01	28.6
969.94	0.21	0.12	<0.01	32.9
970.41	0.16	0.09	<0.01	34.6
970.71	0.04	0.06	0.03	39.6
970.87	0.10	0.07	0.01	37.5
971.07	0.14	0.07	<0.01	35.9
971.31	0.08	0.06	0.02	37.7
971.58	0.14	0.09	0.01	36.7
971.67	0.20	0.10	0.01	34.5
971.95	0.17	0.09	0.01	35.9
972.02	0.17	0.10	0.01	34.6
972.15	0.18	0.10	<0.01	34.8
972.23	0.14	0.07	0.01	36.6
972.30	0.10	0.06	0.01	37.0
972.36	0.06	0.05	0.02	37.1
972.54	0.06	0.06	0.02	37.8
972.62	0.08	0.06	0.02	36.1
972.70	0.09	0.07	0.02	35.8
972.76	0.10	0.08	0.01	36.4
972.84	0.15	0.08	0.01	35.3
972.90	0.17	0.08	0.01	34.2

Appendi III . Results of inorganic geochemical analyses of samples from the Niobrara Formation (depths of 559.2 to 611,03 feet) and Greenhorn Formation (depths of 962.07 to 991.07 feet) in the Amoco Bounds core.

Depth-ft	% TiO2-x	% P2O5-x	% MnO-x	LOI 925C
973.03	0.22	0.07	<0.01	31.1
973.13	0.30	0.09	<0.01	27.4
973.13	0.29	0.09	<0.01	27.4
973.22	0.21	0.08	<0.01	32.0
973.40	0.32	0.09	<0.01	26.6
973.53	0.29	0.10	0.01	28.0
973.72	0.06	0.06	0.02	36.1
974.00	0.10	0.06	0.01	37.7
974.38	0.34	0.09	0.01	23.4
974.66	0.12	0.06	0.01	37.1
975.55	0.14	0.09	0.02	34.0
975.55	0.14	0.08	0.02	34.1
976.28	0.22	0.06	<0.01	14.1
976.43	0.03	<0.05	0.02	39.1
977.37	0.05	0.14	0.02	39.9
977.73	0.22	0.11	0.01	28.9
977.91	0.37	0.10	0.01	25.6
978.40	0.26	0.09	0.01	31.7
978.75	0.05	<0.05	0.06	39.4
979.05	0.42	0.11	0.01	22.8
979.19	0.18	0.08	0.02	29.9
979.45	0.33	0.15	0.01	28.4
980.06	0.19	0.07	0.03	34.2
980.86	0.07	<0.05	0.08	38.4
982.03	0.27	0.16	0.04	30.6
982.03	0.24	0.14	0.03	30.9
982.25	0.23	<0.05	0.01	14.4
982.42	0.92	0.06	0.06	17.1
983.10	0.10	0.07	0.05	37.6
983.22	0.40	0.11	0.02	23.7
983.40	0.13	0.10	0.03	35.2
983.66	0.06	<0.05	0.04	38.9
983.90	0.16	0.07	0.02	34.7
984.33	0.25	0.09	0.02	32.2
984.33				B
984.80	0.32	0.14	<0.01	27.7
985.23	0.28	0.09	0.01	30.8
985.38	0.26	0.07	0.01	31.8
985.50	0.13	0.06	0.02	36.2
985.61	0.12	0.05	0.02	36.8
985.80	0.13	0.06	0.02	36.3
985.95	0.20	0.08	0.01	34.1

Appendi III . Results of inorganic geochemical analyses of samples from the Niobrara Formation (depths of 559.2 to 611,03 feet) and Greenhorn Formation (depths of 962.07 to 991.07 feet) in the Amoco Bounds core.

Depth-ft	% TiO2-x	% P2O5-x	% MnO-x	LOI 925C
986.14	0.19	0.08	0.01	34.0
986.73	0.21	0.09	0.02	32.3
987.22	0.24	0.10	<0.01	31.7
987.73	0.30	0.10	<0.01	27.9
988.12	0.17	0.09	0.02	35.1
988.71	0.33	0.09	<0.01	25.5
989.48	0.35	0.12	<0.01	25.6
990.27	0.39	0.11	<0.01	25.4
990.55	0.23	0.09	0.01	31.7
991.07	0.40	0.18	<0.01	23.6

Appendix IV. Results of carbon and oxygen isotope analyses of samples from the Bridge Creek Limestone Member of the Greenhorn Formation.

Depth-ft	Depth-m	Delta 13C (PDB)	Delta 18O (PDB)
962.47	293.36	0.78	-4.38
963.64	293.72	0.35	-6.48
964.45	293.96	1.69	-7.46
964.85	294.09	1.17	-6.27
965.15	294.18	2.18	-6.92
965.65	294.33	1.95	-7.17
965.90	294.41	1.41	-7.15
966.14	294.48	1.78	-7.29
966.47	294.58	2.19	-7.22
967.50	294.89	1.56	-6.49
967.77	294.98	1.57	-6.45
968.25	295.12	1.80	-7.27
968.57	295.22	2.09	-7.19
968.88	295.31	1.82	-7.68
969.55	295.52	2.65	-7.07
970.41	295.78	2.55	-7.32
970.71	295.87	1.68	-6.16
970.87	295.92	2.51	-6.25
971.07	295.98	2.47	-7.01
971.31	296.06	1.95	-6.66
971.58	296.14	2.52	-6.83
971.67	296.17	2.85	-6.79
971.95	296.25	2.92	-6.91
972.02	296.27	2.74	-6.50
972.15	296.31	3.02	-7.10
972.23	296.34	2.75	-6.80
972.30	296.36	2.62	-6.25
972.36	296.38	2.43	-6.41
972.45	296.40	2.08	-6.46
972.54	296.43	2.23	-6.51
972.62	296.45	2.34	-6.19
972.70	296.48	2.63	-6.12
972.76	296.50	2.71	-6.26
972.84	296.52	2.92	-6.51
972.90	296.54	3.08	-6.54
973.03	296.58	3.20	-6.61
973.13	296.61	3.34	-6.50
973.22	296.64	3.07	-7.24
973.40	296.69	3.57	-6.72
973.72	296.79	2.02	-6.50
974.00	296.88	2.54	-7.14
974.38	296.99	3.39	-6.83
974.66	297.08	2.22	-7.94
975.55	297.35	2.38	-7.35
976.43	297.62	1.80	-6.76
977.37	297.90	1.59	-7.65

Appendix IV. Results of carbon and oxygen isotope analyses of samples from the Bridge Creek Limestone Member of the Greenhorn Formation.

Depth-ft	Depth-m	Delta 13C (PDB)	Delta 18O (PDB)
977.73	298.01	2.24	-7.31
977.91	298.07	3.38	-7.02
978.75	298.32	0.49	-4.86
979.05	298.41	3.31	-6.97
979.19	298.46	1.90	-7.02
979.45	298.54	3.61	-6.97
980.06	298.72	0.92	-6.61
980.86	298.97	-2.66	-3.79
982.03	299.32	0.89	-5.76
982.42	299.44	4.11	-4.38
983.10	299.65	1.43	-6.11
983.22	299.69	2.44	-6.23
983.40	299.74	1.97	-6.62
983.66	299.82	1.49	-6.45
983.90	299.89	2.00	-6.92
984.33	300.02	1.08	-7.91
984.80	300.17	1.75	-7.16
985.23	300.30	1.56	-7.41
985.38	300.34	1.70	-6.45
985.50	300.38	1.38	-7.43
985.61	300.41	1.35	-7.30
985.80	300.47	1.34	-7.29
985.95	300.52	1.41	-7.94
986.14	300.58	1.30	-7.82
986.73	300.76	1.65	-6.71
987.22	300.90	1.73	-7.73
987.73	301.06	1.82	-7.38
988.12	301.18	1.46	-7.22
988.71	301.36	1.73	-6.57
989.48	301.59	1.57	-6.96
990.27	301.83	1.88	-6.14
990.55	301.92	1.38	-6.98
991.07	302.08	1.16	-7.20

Appendix V. Results of Rock-Eval analyses of samples from the Niobrara Formation.

Depth (feet)	Depth (meters)	S2 (mg/g)	H-Index (mg/g)	O-Index (mg/g)	% TOC	Tmax (deg. C)
560.25	170.76	7.52	249	22	4.01	412
560.90	170.96	8.60	291	33	2.95	416
561.20	171.05	21.03	485	32	4.33	409
562.00	171.30	8.50	239	19	3.36	409
563.28	171.69	7.91	208	18	3.80	411
563.67	171.81	9.00	226	20	3.97	409
564.65	172.11	12.12	263	19	4.60	413
564.94	172.19	15.78	346	28	4.55	414
565.30	172.30	4.21	110	10	3.80	415
566.70	172.73	6.56	221	22	2.96	413
567.19	172.88	10.91	235	16	4.63	409
567.62	173.01	15.66	351	30	4.46	413
568.28	173.21	12.91	359	27	3.59	411
568.91	173.40	5.25	127	13	4.11	415
570.00	173.74	12.78	321	30	3.98	411
570.67	173.94	9.16	215	15	4.25	413
571.90	174.32	11.97	280	26	4.27	412
573.15	174.70	13.58	189	15	5.75	408
574.22	175.02	9.30	200	14	4.64	411
574.60	175.14	18.25	244	13	7.47	412
575.26	175.34	4.86	430	38	1.13	413
576.32	175.66	2.35	97	16	2.42	422
577.00	175.87	1.71	68	12	2.51	421
577.70	176.08	12.58	354	30	3.55	413
578.85	176.43	7.28	192	17	3.78	414
579.75	176.71	9.77	365	37	2.67	415
582.31	177.49	14.30	465	36	3.07	417
582.65	177.59	16.36	405	28	4.03	416
584.38	178.12	15.26	316	26	4.82	410
584.69	178.21	6.49	143	10	4.53	413
585.10	178.34	9.43	399	30	2.36	415
586.15	178.66	8.31	206	14	4.02	416
586.79	178.85	23.48	424	25	5.53	411
587.45	179.05	27.88	405	26	6.88	411
587.95	179.21	2.89	81	6	3.55	447
589.60	179.71	26.76	352	23	7.60	415
589.90	179.80	25.01	376	24	6.65	411
590.30	179.92	13.82	348	28	3.96	417
590.60	180.01	7.38	153	13	4.80	415
591.30	180.23	32.06	419	24	7.64	411
594.55	181.22	15.70	384	36	4.08	414
594.92	181.33	5.31	238	42	2.23	417
597.40	182.09	24.22	417	25	5.80	413
597.95	182.26	14.12	322	30	4.38	412
598.61	182.46	15.14	347	27	4.36	414

Appendix V. Results of Rock-Eval analyses of samples from the Niobrara Formation.

599.20	182.64	8.50	239	19	3.55	409
599.62	182.76	15.00	115	5	12.99	412
600.15	182.93	6.43	150	14	4.26	413
600.93	183.16	0.44	22	24	1.99	419
601.35	183.29	0.85	146	91	0.58	427
601.95	183.47	3.12	38	4	8.01	417

Appendix VI. Results of geochemical analyses by Amoco of samples from the Greenhorn Formation.

Sample	Depth (feet)	Depth (meters)	13Cker (o/oo)	% N kerogen	% C kerogen	% H kerogen	% O kerogen	% TOC	S1 (mg/g)	S2 (mg/g)	H-Index (mg/g)	Tmax (deg. C)	% SiO2	% Al2O3	% CaO	% MgO	% Na2O	% K2O	% Fe2O3	% MnO	% TiO2
GH-01	961.83	293.17	-25.8	1.31	66.67	6.33	9.05	5.3	1.49	31.52	595	418	22.7	5.43	32.3	1.10	0.42	1.03	1.47	<0.01	0.19
GH-02	963.42	293.65	-26.0	1.48	67.94	6.42	8.98	4.3	0.48	28.87	671	419	23.2	6.37	33.0	1.01	0.53	0.91	1.30	<0.01	0.17
GH-03	964.33	293.93	-25.5	1.28	72.08	6.09	8.16	2.4	0.17	10.44	435	424	15.3	3.30	41.0	0.83	0.32	0.51	0.84	<0.01	0.11
GH-04	965.42	294.26	-25.7	1.42	70.18	6.34	8.46	3.8	0.32	20.33	535	420	19.3	4.13	37.1	0.89	0.38	0.70	1.15	<0.01	0.15
GH-05	966.42	294.56	-25.5	1.51	70.54	6.43	8.26	3.9	0.28	22.16	568	419	21.0	5.43	35.3	0.95	0.50	0.80	1.23	<0.01	0.18
GH-06	968.83	295.30	-25.7	1.45	70.08	6.25	8.32	4.3	0.33	25.48	593	422	27.0	7.28	28.9	1.11	0.59	1.09	1.48	<0.01	0.25
GH-07	969.33	295.45	-25.3	1.58	70.50	6.07	8.77	3.2	0.16	15.07	471	423	28.0	6.72	30.2	1.16	0.60	1.13	1.54	<0.01	0.26
GH-08	970.58	295.83	-24.6	1.34	64.45	5.71	9.15	3.5	0.27	17.93	512	422	23.4	5.93	32.9	0.99	0.59	1.09	1.92	<0.01	0.22
GH-09	971.33	296.06	-24.5	1.21	68.52	6.26	8.54	3.5	0.27	21.76	622	421	16.3	3.89	39.4	0.86	0.33	0.66	1.16	<0.01	0.15
GH-10	972.08	296.29	-24.2	1.44	67.90	6.17	8.76	3.3	0.24	18.87	572	419	14.8	3.40	40.1	0.80	0.29	0.56	1.14	<0.01	0.12
GH-11	973.33	296.67	-23.8	1.46	65.96	6.22	9.13	4.7	0.39	30.50	649	417	27.9	6.81	28.0	1.20	0.46	1.23	1.77	<0.01	0.23
GH-12	974.17	296.93	-23.5	1.23	66.21	6.20	9.27	4.6	0.36	31.37	682	420	20.8	5.26	34.4	0.98	0.36	0.79	1.34	<0.01	0.16
GH-13	974.33	296.98	-23.5	1.21	63.37	5.86	8.55	5.5	0.47	38.60	702	416	43.2	9.98	14.9	1.97	0.75	1.96	2.54	0.02	0.37
GH-14	974.42	297.00	-23.4	1.38	65.09	6.25	8.35	5.3	0.44	37.04	699	418	28.1	7.14	27.6	1.51	0.46	1.22	1.69	0.01	0.22
GH-15	974.50	297.03	-23.3	1.01	67.31	6.43	8.37	5.2	0.50	41.14	791	418	20.3	5.23	34.5	0.97	0.37	0.77	1.39	<0.01	0.16
GH-16	975.17	297.23	-23.4	1.32	65.95	6.31	8.25	5.1	0.41	34.04	667	419	20.9	5.61	33.9	0.98	0.37	0.81	1.36	<0.01	0.16
GH-17	975.23	297.25	-23.5	1.36	66.05	6.28	8.56	5.5	0.42	38.24	695	418	27.0	6.93	28.3	1.12	0.45	1.17	1.67	<0.01	0.22
GH-18	975.30	297.27	-23.3	1.56	65.42	6.32	8.44	6.0	0.54	43.34	722	418	24.0	6.60	29.3	1.07	0.42	1.00	1.53	<0.01	0.20
GH-19	975.38	297.30	-23.5	1.52	66.64	6.27	8.47	5.4	0.37	37.33	691	418	39.5	10.50	16.2	2.05	0.86	1.87	2.36	0.01	0.36
GH-20	975.45	297.32	-23.6	1.08	64.94	6.03	8.52	7.1	0.68	52.90	745	419	29.5	8.53	24.3	1.50	0.61	1.32	2.16	0.01	0.28
GH-21	978.17	298.15	-23.7	1.11	63.50	5.85	8.39	6.1	0.52	45.34	743	419	37.8	10.00	17.7	1.45	0.79	1.81	2.92	0.01	0.44
GH-22	978.63	298.29	-23.8	1.51	63.93	6.08	8.29	4.5	0.37	32.17	715	420	33.4	7.73	24.0	1.50	0.57	1.46	2.20	0.01	0.30
GH-23	979.73	298.62	-23.2	1.28	67.92	6.07	8.24	2.8	0.41	13.73	490	420	18.2	3.57	39.3	0.83	0.35	0.54	1.18	0.01	0.15
GH-24	980.79	298.94	-24.2	1.24	61.06	5.46	8.63	1.8	0.12	7.84	436	424	21.4	5.20	35.3	0.91	0.51	0.64	2.32	0.02	0.26
GH-25	983.92	299.90	-25.1	1.18	65.48	6.28	7.89	4.7	0.50	29.80	634	420	18.7	4.92	36.1	0.85	0.46	0.75	1.96	<0.01	0.20
GH-26	984.71	300.14	-26.3	1.69	68.76	6.30	8.74	4.9	0.47	27.79	567	419	29.1	8.14	27.3	1.37	0.63	1.12	1.94	<0.01	0.31
GH-27	986.43	300.66	-25.7	1.41	64.73	5.26	8.58	1.2	0.12	2.94	245	424	27.1	10.50	30.1	1.02	0.57	1.04	2.48	<0.01	0.34
GH-28	987.50	300.99	-26.0	1.64	67.00	6.27	8.58	4.5	0.41	27.32	607	421	31.6	8.17	25.4	1.18	0.57	1.30	2.04	<0.01	0.30
GH-29	989.29	301.54	-26.3	1.51	67.31	6.14	7.46	4.4	0.39	23.95	544	422	32.9	8.48	24.8	1.24	0.51	1.60	2.11	<0.01	0.32
GH-30	990.77	301.99	-27.0	1.45	66.25	5.96	7.70	4.3	0.43	24.71	575	420	27.9	7.67	29.1	1.17	0.45	1.33	2.08	<0.01	0.28
GH-31	992.23	302.43	-26.9	1.59	71.07	6.29	7.86	3.4	0.28	19.07	561	424	20.2	6.35	35.4	0.89	0.41	0.89	1.42	<0.01	0.24
GH-32	993.48	302.81	-26.7	1.40	67.24	5.83	7.70	4.1	0.41	22.45	548	422	36.6	10.90	20.6	1.41	0.53	1.93	2.26	<0.01	0.39
GH-33	995.28	303.36	-26.9	1.81	68.59	6.27	7.64	3.4	0.35	19.08	561	418	28.4	7.91	28.4	1.07	0.47	1.22	2.04	<0.01	0.28
GH-34	997.54	304.05	-26.8	1.33	66.03	5.96	7.78	3.0	0.32	15.11	504	422	28.5	7.51	29.9	1.09	0.40	1.27	2.06	<0.01	0.26
GH-35	999.55	304.66	-27.2	1.48	63.79	5.99	7.90	4.5	0.46	26.14	581	420	32.5	10.40	22.5	1.28	0.50	1.63	2.67	<0.01	0.35
GH-36	1001.55	305.27	-26.8	1.54	65.12	6.10	7.78	5.0	0.52	30.39	608	423	32.9	9.44	22.3	1.43	0.59	1.67	2.48	<0.01	0.35
GH-37	1005.43	306.46	-27.4	1.45	65.26	6.18	7.87	4.8	0.49	32.82	684	430	28.8	7.61	26.9	1.09	0.52	1.33	2.22	<0.01	0.24
GH-38	1007.75	307.16	-27.1	1.64	68.63	6.44	7.82	4.3	0.45	26.25	610	422	20.1	4.90	36.8	0.82	0.44	0.66	1.48	<0.01	0.17
GH-39	1010.28	307.93	-27.1	1.63	67.71	6.45	7.27	3.0	0.30	18.49	616	422	22.5	4.67	37.0	0.81	0.34	0.74	1.30	<0.01	0.14
GH-40	1013.29	308.85	-26.8	1.36	67.90	6.30	7.60	3.5	0.33	20.91	597	422	22.6	5.33	34.4	0.98	0.44	0.77	1.91	<0.01	0.17
GH-41	1016.13	309.72	-26.9	2.54	68.10	6.63	7.42	3.9	0.46	25.74	660	420	20.9	4.94	36.5	0.88	0.39	0.57	1.23	<0.01	0.15

Appendix VI. Results of geochemical analyses by Amoco of samples from the Greenhorn Formation.

Sample	Depth (feet)	Depth (meters)	13Cker (o/oo)	% N kerogen	% C kerogen	% H kerogen	% O kerogen	% TOC	S1 (mg/g)	S2 (mg/g)	H-Index (mg/g)	Tmax (deg. C)	% SiO2	% Al2O3	% CaO	% MgO	% Na2O	% K2O	% Fe2O3	% MnO	% TiO2
GH-42	1020.21	310.96	-27.0	1.76	68.07	6.50	7.35	4.2	0.45	26.32	627	421	20.0	5.30	36.7	0.94	0.42	0.71	1.67	<0.01	0.18
GH-43	1025.27	312.50	-26.9	1.65	67.15	6.24	7.70	3.9	0.43	23.52	603	425	26.0	6.38	30.5	1.44	0.49	1.13	2.09	<0.01	0.22
GH-44	1028.35	313.44	-26.9	1.64	65.57	6.12	7.52	4.2	0.54	27.41	653	420	26.3	6.11	28.8	1.16	0.53	1.00	2.17	<0.01	0.21
GH-45	1032.06	314.57	-26.7	1.62	69.81	5.78	7.97	2.9	0.15	10.87	375	425	44.9	11.50	14.9	2.14	0.60	2.07	2.74	0.01	0.41
GH-46	1035.48	315.61	-26.7	2.66	69.03	5.92	8.16	2.8	0.19	11.67	417	422	46.6	12.20	12.8	2.49	0.59	2.10	3.07	0.02	0.42
GH-47	1038.46	316.52	-26.8	1.56	67.90	5.87	7.90	3.6	0.33	16.69	464	420	48.7	12.30	10.9	2.17	0.69	2.24	3.14	0.02	0.45
GH-48	1041.46	317.44	-26.6	1.81	68.96	5.96	7.67	3.4	0.35	15.09	444	422	43.2	11.80	15.5	2.13	0.53	1.97	2.84	0.02	0.40
GH-49	1044.40	318.33	-26.4	1.69	70.84	5.75	7.98	2.8	0.23	10.55	596	426	46.3	13.60	11.3	2.46	0.69	2.17	3.08	0.02	0.41
GH-50	1047.73	319.35	-26.2	1.57	69.21	5.88	8.24	3.2	0.28	14.01	438	426	49.1	13.60	8.6	2.52	0.76	2.52	3.22	0.02	0.48
GH-51	1059.49	322.93	-26.7	1.62	66.56	5.84	7.95	3.9	0.31	20.27	520	424	45.5	14.60	10.1	1.98	0.50	2.37	3.95	0.02	0.50
GH-52	1065.60	324.79	-26.2	1.59	67.85	6.34	7.28	4.4	0.48	26.07	593	425	35.2	11.20	18.3	2.03	0.35	1.62	4.67	0.03	0.37
GH-53	1071.40	326.56	-26.3	2.38	67.92	5.60	8.13	2.8	0.39	10.22	365	426	51.1	17.50	5.3	2.06	0.53	2.75	3.56	0.04	0.58
GH-54	1077.69	328.48	-25.7	1.55	65.37	6.12	7.89	6.0	0.72	39.58	660	422	49.8	16.60	4.6	1.79	0.53	2.43	3.99	0.02	0.57
GH-55	1080.81	329.43	-26.0	1.82	67.93	6.07	8.38	3.9	0.42	21.28	546	425	45.7	14.10	10.5	2.56	0.40	2.11	3.77	0.03	0.51

Appendix VI. Results of geochemical analyses by Amoco of samples from the Greenhorn Formation.

Sample	% P2O5	LOI	CO2%	% CaCO3 (CaO+CO2)	% S	ppm Ba	ppm Cr	ppm Cu	ppm Nb	ppm Ni	ppm Pb	ppm Rb	ppm Sr	ppm Th	ppm U	ppm Y	ppm Zn	ppm Zr
GH-01	0.11	34.3	25.6	57.9	1.65	406	<10	1.5	22	45	2	38	801	36	18	<10	144	26
GH-02	0.08	33.3	26.2	59.2	1.27	184	<10	26	<10	51	15	28	841	12	17	16	76	33
GH-03	0.08	37.1	32.6	73.6	0.69	91	<10	26	15	24	2	18	967	13	<2	<10	54	19
GH-04	0.14	35.1	29.0	66.1	1.05	123	<10	28	10	19	4	24	932	4	4	<10	77	32
GH-05	0.09	34.4	27.4	62.7	1.06	141	<10	33	<10	32	6	27	958	11	4	14	53	36
GH-06	0.14	30.6	22.9	51.8	1.05	190	18	43	<10	40	24	39	858	16	3	<10	89	64
GH-07	0.10	29.8	23.7	53.9	0.90	206	<10	37	<10	32	8	30	861	22	4	16	63	50
GH-08	0.13	31.5	26.1	59.0	1.78	128	<10	36	13	37	8	30	914	11	15	<10	57	33
GH-09	0.07	36.5	31.5	70.9	1.13	104	<10	34	14	26	2	24	1080	14	<2	<10	56	30
GH-10	0.10	37.5	31.8	71.9	1.26	67	<10	26	<10	15	2	24	1030	2	<2	<10	52	12
GH-11	0.09	30.5	22.2	50.2	1.68	125	15	32	163	20	12	46	1090	9	6	11	75	44
GH-12	0.07	34.5	27.0	61.4	1.49	144	<10	25	13	18	2	30	1110	14	3	25	79	<10
GH-13	0.09	24.6	12.2	27.1	1.88	344	61	27	17	28	11	77	694	28	<2	14	80	81
GH-14	0.09	30.2	21.9	49.5	1.70	181	12	26	<10	17	8	43	1120	11	<2	<10	67	38
GH-15	0.07	35.6	27.1	61.6	1.77	128	<10	1.5	15	2	15	23	1410	9	9	<10	123	27
GH-16	0.08	34.5	27.1	61.0	1.51	146	<10	24	<10	18	5	33	1300	16	<2	<10	54	21
GH-17	0.08	31.6	22.3	50.6	1.73	162	10	26	<10	18	9	38	1110	23	<2	<10	60	36
GH-18	0.08	34.0	23.4	52.7	1.88	163	<10	28	16	17	12	36	1100	12	<2	11	63	35
GH-19	0.10	26.3	13.0	29.2	1.68	283	55	30	19	22	23	67	712	21	4	15	70	87
GH-20	0.12	30.8	18.8	43.1	2.33	200	21	37	14	31	15	57	926	18	<2	<10	79	67
GH-21	0.15	26.1	13.7	31.4	2.46	242	61	51	25	47	3	71	681	2	<2	15	64	84
GH-22	0.11	27.0	18.7	42.7	1.86	255	28	27	16	28	4	48	942	14	8	<10	67	51
GH-23	0.09	35.2	30.7	70.0	1.06	87	<10	26	<10	7	10	15	964	4	2	<10	49	26
GH-24	0.07	31.0	27.5	62.8	1.59	140	14	41	16	22	4	31	865	8	<2	<10	45	23
GH-25	0.10	34.5	27.4	63.5	0.97	153	<10	17	<10	20	5	37	1020	2	<2	24	40	36
GH-26	0.10	29.9	21.1	48.4	0.69	515	<10	21	<10	32	2	42	917	2	5	21	55	65
GH-27	0.10	26.8	22.4	52.5	0.48	185	<10	15	21	15	2	27	788	6	5	15	42	84
GH-28	0.12	27.7	19.6	45.0	0.74	257	17	24	21	30	2	45	758	3	5	21	51	62
GH-29	0.10	26.8	19.2	44.0	0.77	604	19	19	25	46	2	45	748	5	6	13	49	54
GH-30	0.10	29.3	22.0	51.1	0.78	190	<10	17	<10	34	5	46	815	2	2	11	53	52
GH-31	0.09	33.5	27.1	62.5	0.51	189	<10	19	<10	36	2	28	967	2	6	<10	73	47
GH-32	0.10	25.4	15.7	36.3	0.66	273	40	17	17	49	9	76	647	4	5	<10	81	78
GH-33	0.10	28.6	21.7	50.1	0.71	226	17	18	19	40	7	55	913	4	4	12	65	56
GH-34	0.10	28.8	22.5	52.4	0.75	195	<10	12	20	32	4	43	1200	2	4	13	51	41
GH-35	0.12	28.2	16.8	39.3	1.39	280	22	23	22	54	8	74	817	7	11	<10	61	58
GH-36	0.11	27.9	17.1	39.4	0.91	289	39	18	20	62	3	56	809	3	8	10	72	56
GH-37	0.12	29.3	20.6	47.5	0.95	172	<10	23	<10	51	5	47	761	2	8	19	69	68
GH-38	0.14	34.6	27.8	64.6	0.64	115	<10	19	14	37	4	22	904	2	9	<10	56	44
GH-39	0.10	32.8	27.9	64.9	0.57	105	<10	12	<10	34	2	30	778	2	7	<10	40	53
GH-40	0.09	31.9	26.5	60.9	0.70	50	<10	14	12	34	2	27	876	2	5	<10	48	29
GH-41	0.08	34.4	27.8	64.3	0.71	98	<10	19	11	43	3	25	786	2	4	<10	54	33

Appendix VI. Results of geochemical analyses by Amoco of samples from the Greenhorn Formation.

Sample	% P2O5	LOI	CO2%	% CaCO3 (CaO+CO2)	% S	ppm Ba	ppm Cr	ppm Cu	ppm Nb	ppm Ni	ppm Pb	ppm Rb	ppm Sr	ppm Th	ppm U	ppm Y	ppm Zn	ppm Zr
GH-42	0.13	34.0	27.3	64.0	0.73	81	<10	15	14	34	2	16	840	3	5	<10	48	26
GH-43	0.12	30.0	23.8	54.3	0.74	125	<10	14	<10	40	7	33	949	2	9	<10	57	58
GH-44	0.18	29.6	23.1	51.9	0.97	5820	<10	21	<10	39	2	31	1370	2	11	15	51	37
GH-45	0.12	20.9	11.9	26.8	0.51	221	43	38	25	23	9	79	523	9	2	<10	61	92
GH-46	0.13	19.7	10.7	23.5	0.52	210	50	17	27	28	3	73	452	5	<2	17	72	119
GH-47	0.12	19.4	9.0	19.9	0.64	255	64	16	<10	29	4	87	432	10	<2	26	49	111
GH-48	0.15	21.0	12.5	28.0	0.55	208	46	16	22	24	12	75	554	9	<2	13	49	103
GH-49	0.16	20.3	9.6	20.9	0.49	219	48	19	22	26	13	100	380	11	2	17	56	121
GH-50	0.15	19.3	7.2	15.8	0.56	275	65	15	25	27	6	101	336	7	4	29	58	117
GH-51	0.16	20.6	8.7	18.8	0.95	233	53	28	23	43	8	100	339	9	6	27	64	128
GH-52	0.19	25.1	16.1	34.4	0.71	121	39	19	18	33	7	71	502	10	4	23	50	104
GH-53	0.27	16.2	4.8	10.1	0.54	320	80	19	18	30	13	117	270	12	4	41	55	141
GH-54	0.15	19.9	4.0	8.6	1.04	336	76	21	28	41	12	106	252	8	5	27	65	132
GH-55	0.16	19.8	9.7	20.2	0.72	203	71	22	28	36	9	94	381	9	2	29	58	134