LEVEL II SCOUR ANALYSIS FOR BRIDGE 71 (WODSTH00050071) on TOWN HIGHWAY 5, crossing KEDRON BROOK, WOODSTOCK, VERMONT

Open-File Report 97-807

Prepared in cooperation with
VERMONT AGENCY OF TRANSPORTATION
and
FEDERAL HIGHWAY ADMINISTRATION

U.S. Department of the Interior
U.S. Geological Survey

USGS
science for a changing world

LEVEL II SCOUR ANALYSIS FOR BRIDGE 71 (WODSTH00050071) on TOWN HIGHWAY 5, crossing KEDRON BROOK, WOODSTOCK, VERMONT

By SCOTT A. OLSON and JOSEPH D. AYOTTE

U.S. Geological Survey
Open-File Report 97-807

Prepared in cooperation with
VERMONT AGENCY OF TRANSPORTATION
and
FEDERAL HIGHWAY ADMINISTRATION

Pembroke, New Hampshire

1997

U.S. DEPARTMENT OF THE INTERIOR
BRUCE BABBITT, Secretary

U.S. GEOLOGICAL SURVEY
Mark Schaefer, Acting Director

For additional information
write to:

District Chief
U.S. Geological Survey
361 Commerce Way
Pembroke, NH 03275-3718

Copies of this report may be
purchased from:

U.S. Geological Survey
Branch of Information Services
Open-File Reports Unit
Box 25286
Denver, CO 80225-0286

CONTENTS

Introduction and Summary of Results 1
Level II summary 7
Description of Bridge 7
Description of the Geomorphic Setting 8
Description of the Channel 8
Hydrology 9
Calculated Discharges 9
Description of the Water-Surface Profile Model (WSPRO) Analysis 10
Cross-Sections Used in WSPRO Analysis 10
Data and Assumptions Used in WSPRO Model 11
Bridge Hydraulics Summary 12
Scour Analysis Summary 13
Special Conditions or Assumptions Made in Scour Analysis 13
Scour Results 14
Riprap Sizing 14
References 18

Appendixes:
A. WSPRO input file 19
B. WSPRO output file 21
C. Bed-material particle-size distribution 28
D. Historical data form 30
E. Level I data form 36
F. Scour computations 46

FIGURES

1. Map showing location of study area on USGS 1:24,000 scale map 3
2. Map showing location of study area on Vermont Agency of Transportation town highway map 4
3. Structure WODSTH00050071 viewed from upstream (September 14, 1994) 5
4. Downstream channel viewed from structure WODSTH00050071 (September 14, 1994) 5
5. Upstream channel viewed from structure WODSTH00050071 (September 14, 1994). 6
6. Structure WODSTH00050071 viewed from downstream (September 14, 1994). 6
7. Water-surface profiles for the 100- and 500-year discharges at structure WODSTH00050071 on Town Highway 5, crossing Kedron Brook, Woodstock, Vermont 15
8. Scour elevations for the 100- and 500-year discharges at structure WODSTH00050071 on Town Highway 5, crossing Kedron Brook, Woodstock, Vermont 16

TABLES

1. Remaining footing/pile depth at abutments for the 100-year discharge at structure WODSTH00050071 on Town Highway 5, crossing Kedron Brook, Woodstock, Vermont 17
2. Remaining footing/pile depth at abutments for the 500-year discharge at structure WODSTH00050071 on Town Highway 5, crossing Kedron Brook, Woodstock, Vermont 17

CONVERSION FACTORS, ABBREVIATIONS, AND VERTICAL DATUM

Multiply	By	To obtain
	Length	
inch (in.)	25.4	millimeter (mm)
foot (ft)	0.3048	meter (m)
mile (mi)	1.609	kilometer (km)
	Slope	
foot per mile (ft/mi)	0.1894	meter per kilometer (m/km)
	Area	
square mile (mi^2)	2.590	square kilometer (km^2)
	Volume	
cubic foot (ft^3)	0.02832	cubic meter (m^3)
	Velocity and Flow	
foot per second (ft/s)	0.3048	meter per second (m/s)
cubic foot per second (ft^3/s)	0.02832	cubic meter per second (m^3/s)
cubic foot per second per square mile [$(ft^3/s)/mi^2$]	0.01093	cubic meter per second per square kilometer [$(m^3/s)/km^2$]

OTHER ABBREVIATIONS

BF	bank full	LWW	left wingwall
cfs	cubic feet per second	MC	main channel
D_{50}	median diameter of bed material	RAB	right abutment
DS	downstream	RABUT	face of right abutment
elev.	elevation	RB	right bank
f/p	flood plain	ROB	right overbank
ft^2	square feet	RWW	right wingwall
ft/ft	feet per foot	TH	town highway
JCT	junction	UB	under bridge
LAB	left abutment	US	upstream
LABUT	face of left abutment	USGS	United States Geological Survey
LB	left bank	VTAOT	Vermont Agency of Transportation
LOB	left overbank	WSPRO	water-surface profile model

In this report, the words “right” and “left” refer to directions that would be reported by an observer facing downstream.

Sea level: In this report, “sea level” refers to the National Geodetic Vertical Datum of 1929-- a geodetic datum derived from a general adjustment of the first-order level nets of the United States and Canada, formerly called Sea Level Datum of 1929.

In the appendices, the above abbreviations may be combined. For example, USLB would represent upstream left bank.

LEVEL II SCOUR ANALYSIS FOR BRIDGE 71 (WODSTH00050071) ON TOWN HIGHWAY 5, CROSSING KEDRON BROOK, WOODSTOCK, VERMONT

***By* Scott A. Olson and Joseph D. Ayotte**

INTRODUCTION AND SUMMARY OF RESULTS

This report provides the results of a detailed Level II analysis of scour potential at structure WODSTH00050071 on Town Highway 5 crossing Kedron Brook, Woodstock, Vermont (figures 1–8). A Level II study is a basic engineering analysis of the site, including a quantitative analysis of stream stability and scour (U.S. Department of Transportation, 1993). Results of a Level I scour investigation also are included in Appendix E of this report. A Level I investigation provides a qualitative geomorphic characterization of the study site. Information on the bridge, gleaned from Vermont Agency of Transportation (VTAOT) files, was compiled prior to conducting Level I and Level II analyses and is found in Appendix D.

The site is in the New England Upland section of the New England physiographic province in east-central Vermont. The 16.1-mi^2 drainage area is in a predominantly rural and forested basin. However, the bridge site is within the Village of Woodstock. In the vicinity of the study site, the surface cover is best described as suburban downstream of the bridge and forest and brush upstream of the bridge.

In the study area, Kedron Brook has an incised, sinuous channel with a slope of approximately 0.03 ft/ft, an average channel top width of 33 ft and an average bank height of 11 ft. The predominant channel bed material is cobble with a median grain size (D_{50}) of 112 mm (0.368 ft). The geomorphic assessment at the time of the Level I and Level II site visit on September 14, 1994, indicated that the reach was vertically degraded. Evidence of the degradation was observed at the outlet of the bridge where the stream bed is 4 ft below the downstream invert of the structure (see figure 6).

The Town Highway 5 crossing of Kedron Brook is a 30-ft-long, two-lane bridge/box culvert consisting of one 25-foot concrete span (Vermont Agency of Transportation, written communication, August 3, 1994). The opening length of the structure parallel to the bridge face is 23.5 ft.The bridge is supported by vertical, concrete abutments with wingwalls. The channel bed under the bridge is covered entirely by a concrete slab. The channel is skewed approximately 45 degrees to the opening and the opening-skew-to-roadway is also 45 degrees.

Scour countermeasures at the site include concrete retaining walls on both the left and right downstream banks extending approximately 130 ft downstream; a drywall constructed of stone on the upstream right bank extending to the next bridge upstream; type-2 stone fill (less than 36 inches diameter) along the upstream left bank, at the upstream end of the upstream right wingwall, and along the base of the retaining wall on the downstream left bank; and type-3 stone-fill (less than 48 inches diameter) along the base of the retaining wall on the downstream right bank. In addition, the channel under the bridge is concrete. Further details describing conditions at the site are included in the Level II Summary and Appendices D and E.

Scour depths and recommended rock rip-rap sizes were computed using the general guidelines described in Hydraulic Engineering Circular 18 (Richardson and others, 1995) for the 100- and 500-year discharges. In addition, the incipient roadway-overtopping discharge is determined and analyzed as another potential worst-case scour scenario. Total scour at a highway crossing is comprised of three components: 1) long-term streambed degradation; 2) contraction scour (due to accelerated flow caused by a reduction in flow area at a bridge) and; 3) local scour (caused by accelerated flow around piers and abutments). Total scour is the sum of the three components. Equations are available to compute depths for contraction and local scour and a summary of the results of these computations follows.

Contraction scour for all modelled flows ranged from 0.0 to 2.5 ft. The worst-case contraction scour occurred at the incipient roadway-overtopping discharge, which was less than the 100-year discharge. The contraction scour depths do not take the concrete channel bed under the bridge into account. Abutment scour ranged from 8.7 to 18.2 ft. The worst-case abutment scour occurred at the 500-year discharge. Additional information on scour depths and depths to armoring are included in the section titled “Scour Results”. Scoured-streambed elevations, based on the calculated scour depths, are presented in tables 1 and 2. A cross-section of the scour computed at the bridge is presented in figure 8. Scour depths were calculated assuming an infinite depth of erosive material and a homogeneous particle-size distribution.

It is generally accepted that the Froehlich equation (abutment scour) gives “excessively conservative estimates of scour depths” (Richardson and others, 1995, p. 47). Usually, computed scour depths are evaluated in combination with other information including (but not limited to) historical performance during flood events, the geomorphic stability assessment, existing scour protection measures, and the results of the hydraulic analyses. Therefore, scour depths adopted by VTAOT may differ from the computed values documented herein.

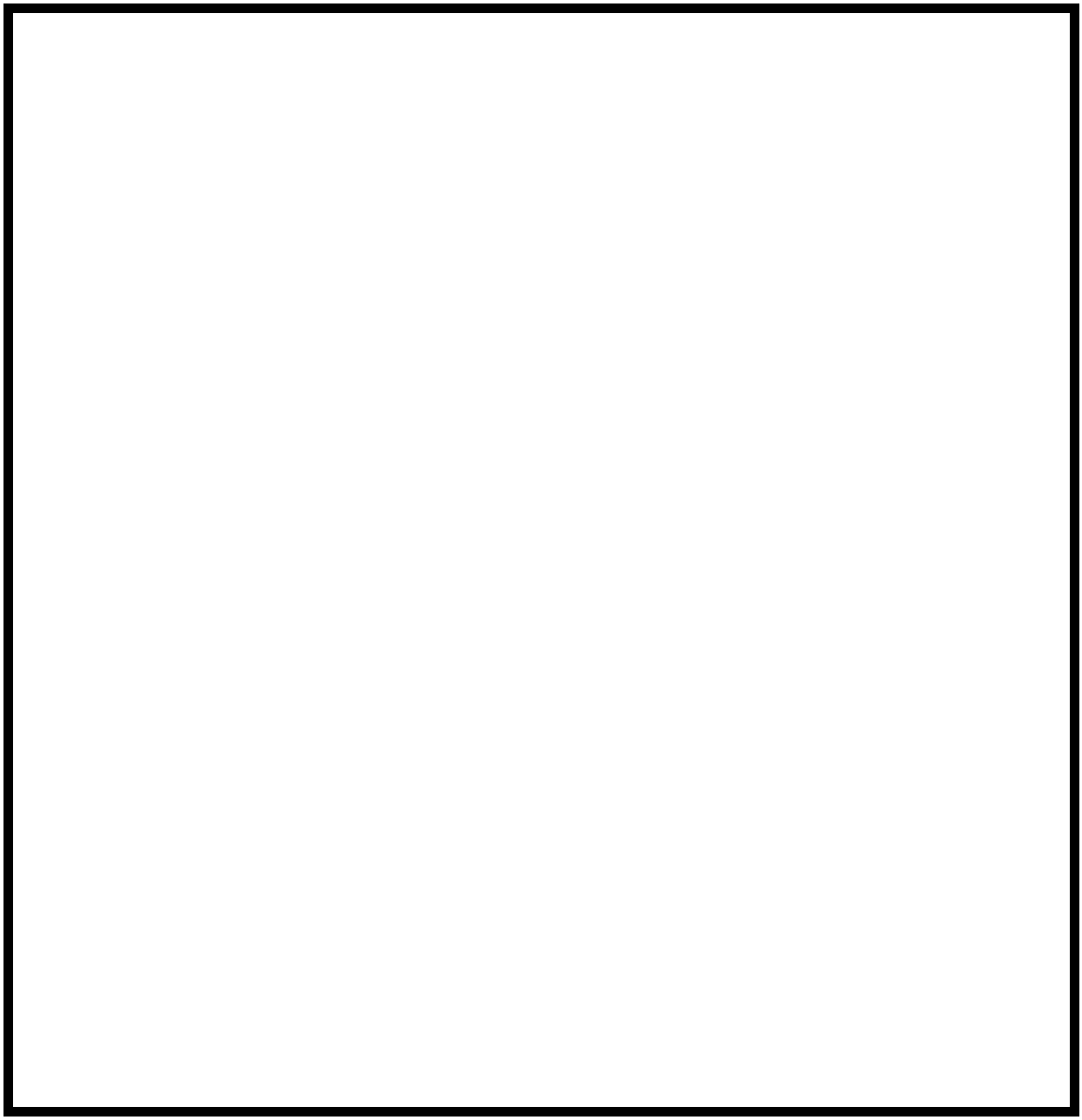

Woodstock North and Woodstock South, VT. Quadrangle, 1:24,000, 1966

NORTH

Figure 1. Location of study area on USGS 1:24,000 scale map.

Figure 2. Location of study area on Vermont Agency of Transportation town highway map.

LEVEL II SUMMARY

Structure Number WODSTH00050071 ***Stream*** Kedron Brook

County Windsor ***Road*** TH5 ***District*** 4

Description of Bridge

Bridge length 30 ***ft*** ***Bridge width*** 37.9 ***ft*** ***Max span length*** 25 ***ft***

Alignment of bridge to road (on curve or straight) Straight

Abutment type Vertical, concrete ***Embankment type*** Sloping

Stone fill on abutment? No ***Date of inspection*** 9/14/94

Description of stone fill Type-2, along the upstream left bank, at the upstream right wingwall, and along the base of the downstream left retaining wall. Type 3 along the base of the downstream right retaining wall.

Brief description of piers/abutments Abutments are concrete. The channel under the bridge is also concrete

Is bridge skewed to flood flow according to Y ***survey?*** Y ***Angle*** 45

There is a severe channel bend near the upstream bridge face. The bend results in an impact zone and scour at the upstream left wingwall.

Debris accumulation on bridge at time of Level I or Level II site visit:

	Date of inspection	***Percent of channel blocked horizontally***	***Percent of channel blocked vertically***
Level I	9/14/94	0	0
Level II	9/14/94	0	0

Potential for debris Low.

Describe any features near or at the bridge that may affect flow (include observation date) September 14, 1994. Kedron Brook enters the Ottauquechee River approximately 600 ft downstream of this bridge site. However, there is no backwater from the Ottauquechee River at this bridge site (Federal Emergency Management Agency, 1979).

Description of the Geomorphic Setting

General topography The channel is located within a high terrace of the Ottauquechee River Valley.

Geomorphic conditions at bridge site: downstream (DS), upstream (US)

Date of inspection 9/14/94

DS left: Steep channel bank to a wide flood plain.

DS right: Steep channel bank to a wide flood plain.

US left: Steep channel bank to a wide flood plain.

US right: Steep channel bank to a wide flood plain.

Description of the Channel

Average top width 33 ***ft*** ***Average depth*** 11 ***ft***

Predominant bed material Cobbles ***Bank material*** Constructed.

Incised, sinuous but stable, with constructed channel boundaries and a

9/14/94

Vegetative co A few trees on the immediate bank, otherwise grass.

DS left: Trees and brush on immediate bank with grass on the overbank.

DS right: Trees.

US left: Brush and a few trees on the immediate bank with grass on the overbank.

US right: Brush and a few trees on the immediate bank with grass on the overbank.

Do banks appear stable? Y

If no, describe location and type of instability and date of observation. There is a 4- to 5-ft scour hole at the location where flow spills off the concrete bottom of the box culvert.

None. September 14, 1994.

Describe any obstructions in channel and date of observation.

Hydrology

Drainage area 16.1 ***mi²***

Percentage of drainage area in physiographic provinces: (approximate)

Physiographic province/section	***Percent of drainage area***
New England/New England Upland	100

Is drainage area considered rural or urban? Rural ***Describe any significant urbanization***: The bridge site is within the Village of Woodstock. However, the drainage is considered rural.

Is there a USGS gage on the stream of interest? No

USGS gage description --

USGS gage number --

Gage drainage area -- ***mi²***

Is there a lake/p No

Calculated Discharges

Q100 3,400 ***ft³/s*** ***Q500*** 4,400 ***ft³/s***

The 100-year discharge is from the VTAOT database (VTAOT, written communication, May, 1995). The 500-year discharge was determined by graphical extrapolation of the flood frequency estimates available in the VTAOT database. The discharges were within a range defined by the results of several empirical methods for determining flood frequency estimates for ungaged sites (Benson, 1962; Johnson and Tasker, 1974; FHWA, 1983; Potter, 1957a&b; Talbot, 1887).

Description of the Water-Surface Profile Model (WSPRO) Analysis

Datum for WSPRO analysis (USGS survey, sea level, VTAOT plans) USGS survey

Datum tie between USGS survey and VTAOT plans Subtract 400.3 from USGS arbitrary survey datum to obtain plans' datum.

Description of reference marks used to determine USGS datum. RM1 is a chiseled X within a chiseled square on top of the upstream end of the right abutment (elev. 499.75 ft, arbitrary survey datum).

Cross-Sections Used in WSPRO Analysis

[1]*Cross-section*	*Section Reference Distance (SRD) in feet*	[2]*Cross-section development*	*Comments*
EXIT2	-127	1	Downstream section
EXIT1	-53	1	Exit section
FULLV	0	2	Downstream Full-valley section (Templated from EXIT1)
BRIDG	0	1	Bridge section
RDWAY	28	1	Road Grade section
APPRO	73	1	Approach section.

[1] For location of cross-sections see plan-view sketch included with Level I field form, Appendix E. For more detail on how cross-sections were developed see WSPRO input file.

Data and Assumptions Used in WSPRO Model

Hydraulic analyses of the reach were done by use of the Federal Highway Administration's WSPRO step-backwater computer program (Shearman and others, 1986, and Shearman, 1990). The analyses reported herein reflect conditions existing at the site at the time of the study. Furthermore, in the development of the model it was necessary to assume no accumulation of debris or ice at the site. Results of the hydraulic model are presented in the Bridge Hydraulic Summary, Appendix B, and figure 7.

Channel roughness factors (Manning's "n") used in the hydraulic model were estimated using field inspections at each cross section following the general guidelines described by Arcement and Schneider (1989). Final adjustments to the values were made during the modelling of the reach. Channel "n" values for the reach ranged from 0.020 to 0.055, and overbank "n" values ranged from 0.035 to 0.070.

Normal depth at the exit section (EXIT2) was assumed as the starting water surface for the 100-year and incipient roadway-overtopping discharges. This depth was computed by use of the slope-conveyance method outlined in the user's manual for WSPRO (Shearman, 1990). The slope used was 0.032 ft/ft, which was estimated from the topographic map (U.S. Geological Survey, 1966). For the 500-year model, this energy gradient resulted in a normal depth which was approximately 0.4 ft below critical depth. Thus, critical depth at the exit was allowed for this discharge.

The surveyed approach section (APPRO) was surveyed one bridge length upstream of the upstream face as recommended by Shearman and others (1986). This location also provides a consistent method for determining scour variables.

For the incipient-overtopping discharge, WSPRO assumes critical depth at the bridge section. A supercritical model was developed for this discharge. After analyzing both the supercritical and subcritical profiles, it can be determined that the water-surface profile does pass through critical depth within the bridge opening. Thus, the assumption of critical depth at the bridge is a satisfactory solution.

Bridge Hydraulics Summary

Average bridge embankment elevation 500.4 *ft*
Average low steel elevation 497.5 *ft*

100-year discharge 3,400 *ft^3/s*
Water-surface elevation in bridge opening 497.5 *ft*
Road overtopping? Y *Discharge over road* 730 *ft^3/s*
Area of flow in bridge opening 228 *ft^2*
Average velocity in bridge opening 11.6 *ft/s*
Maximum WSPRO tube velocity at bridge 17.2 *ft/s*

Water-surface elevation at Approach section with bridge 501.4
Water-surface elevation at Approach section without bridge 492.7
Amount of backwater caused by bridge 8.7 *ft*

500-year discharge 4,400 *ft^3/s*
Water-surface elevation in bridge opening 497.5 *ft*
Road overtopping? Y *Discharge over road* 1,590 *ft^3/s*
Area of flow in bridge opening 229 *ft^2*
Average velocity in bridge opening 12.1 *ft/s*
Maximum WSPRO tube velocity at bridge 15.8 *ft/s*

Water-surface elevation at Approach section with bridge 501.9
Water-surface elevation at Approach section without bridge 494.8
Amount of backwater caused by bridge 7.1 *ft*

Incipient overtopping discharge 2,500 *ft^3/s*
Water-surface elevation in bridge opening 492.6 *ft*
Area of flow in bridge opening 148 *ft^2*
Average velocity in bridge opening 16.9 *ft/s*
Maximum WSPRO tube velocity at bridge 22.9 *ft/s*

Water-surface elevation at Approach section with bridge 497.5
Water-surface elevation at Approach section without bridge 491.9
Amount of backwater caused by bridge 5.6 *ft*

Scour Analysis Summary

Special Conditions or Assumptions Made in Scour Analysis

Scour depths were computed using the general guidelines described in Hydraulic Engineering Circular 18 (Richardson and others, 1995). Scour depths were calculated assuming an infinite depth of erosive material and a homogeneous particle-size distribution. The results of the scour analysis are presented in tables 1 and 2 and a graph of the scour depths is presented in figure 8.

Contraction scour for the incipient roadway-overtopping discharge was computed by use of the Laursen clear-water contraction scour equation (Richardson and others, 1995, p. 32, equation 20). At this site, the 100- and 500-yr discharges resulted in unsubmerged orifice flow. Contraction scour at bridges with orifice flow is best estimated by use of the Chang pressure-flow scour equation (oral communication, J. Sterling Jones, October 4, 1996). Thus, contraction scour for these discharges was computed by use of the Chang equation (Richardson and others, 1995, p. 145-146). At this site, the scour computations do not take into account the constructed channel bed.

For comparison, contraction scour for the discharges resulting in orifice flow was also computed by use of the Laursen clear-water contraction scour equation and the Umbrell pressure-flow equation (Richardson and others, 1995, p. 144) and presented in Appendix F. Furthermore, for those discharges resulting in unsubmerged orifice flow, contraction scour was computed by substituting estimates for the depth of flow at the downstream bridge face in the contraction scour equations. Results with respect to these substitutions are provided in Appendix F.

Abutment scour was computed by use of the Froehlich equation (Richardson and others, 1995, p. 48, equation 28). Variables for the Froehlich equation include the Froude number of the flow approaching the embankments, the length of the embankment blocking flow, and the depth of flow approaching the embankment less any roadway overtopping.

Scour Results

Contraction scour:	*100-yr discharge*	*500-yr discharge*	*Incipient overtopping discharge*
	(Scour depths in feet)		
Main channel			
Live-bed scour	--	--	--
Clear-water scour	0.0	0.0	2.5
Depth to armoring	N/A	N/A	N/A
Left overbank	--	--	--
Right overbank	--	--	--

Local scour:			
Abutment scour	16.5	18.2	17.9
Left abutment	10.5	12.8	8.7
Right abutment	--	--	--
Pier scour	--	--	--
Pier 1	--	--	--
Pier 2	--	--	--
Pier 3	--	--	--

Riprap Sizing

	100-yr discharge	*500-yr discharge*	*Incipient overtopping discharge*
	(D_{50} in feet)		
Abutments:			
Left abutment	3.9	4.0	3.7
Right abutment	3.9	4.0	3.7
Piers:			
Pier 1	--	--	--
Pier 2	--	--	--

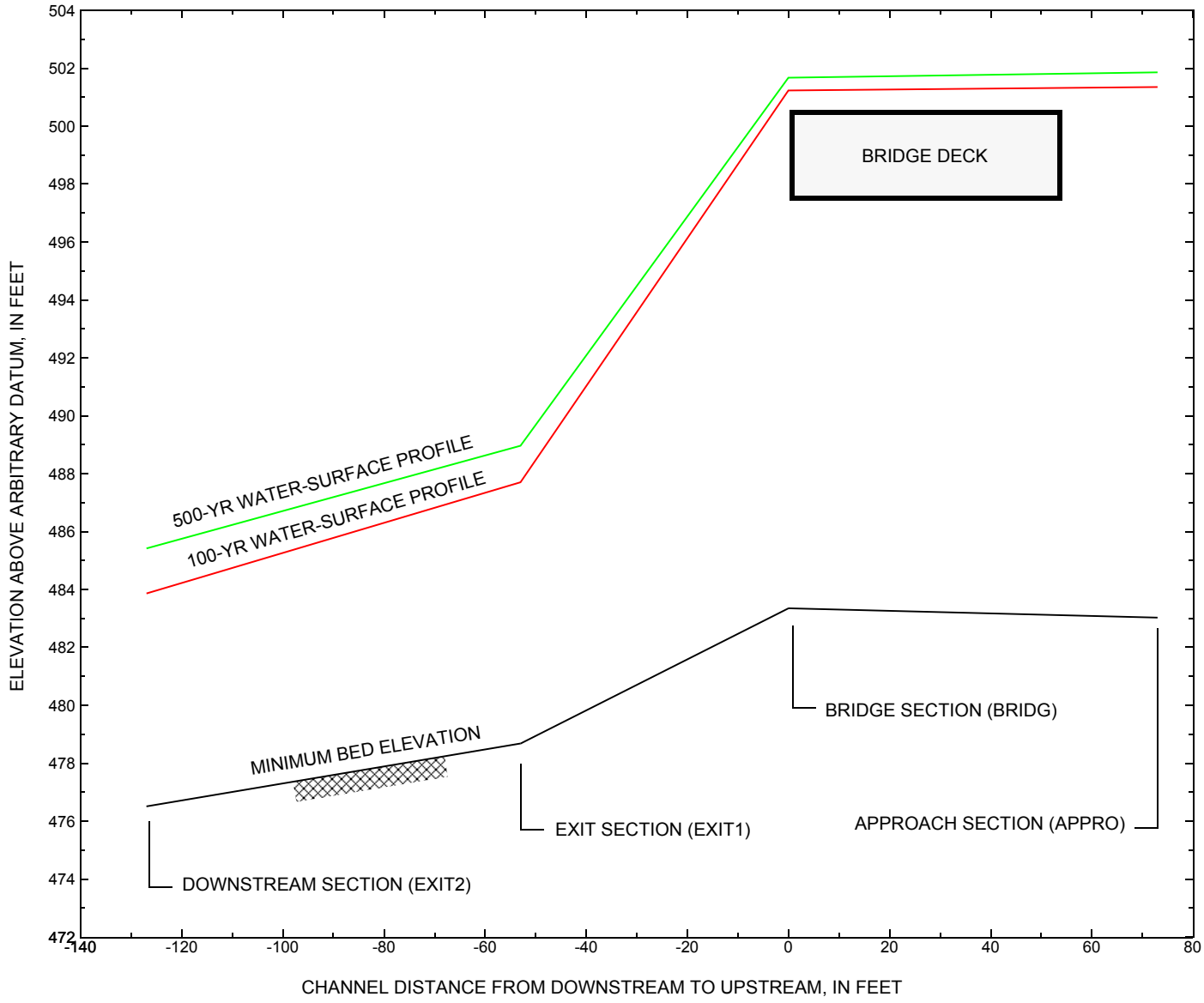

Figure 7. Water-surface profiles for the 100- and 500-yr discharges at structure WODSTH00050071 on Town Highway 5, crossing Kedron Brook, Woodstock, Vermont.

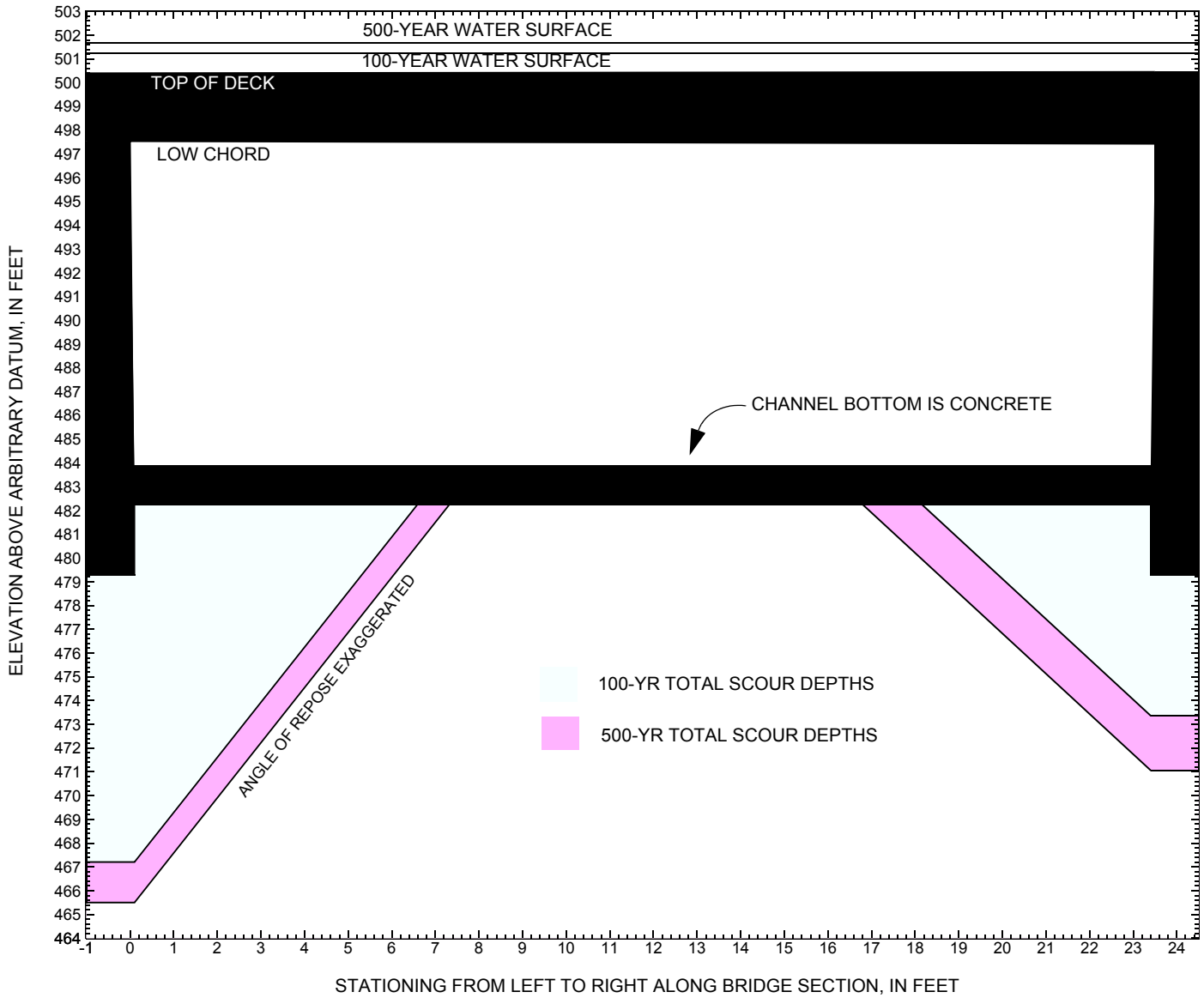

Figure 8. Scour elevations for the 100-yr and 500-yr discharges at structure WODSTH00050071 on Town Highway 5, crossing Kedron Brook, Woodstock, Vermont.

Table 1. Remaining footing/pile depth at abutments for the 100-year discharge at structure WODSTH00050071 on Town Highway 5, crossing Kedron Brook, Woodstock, Vermont.

[VTAOT, Vermont Agency of Transportation; --,no data]

Description	Station[1]	VTAOT minimum low-chord elevation (feet)	Surveyed minimum low-chord elevation[2] (feet)	Bottom of footing/pile elevation[2] (feet)	Channel elevation at abutment/ pier[2] (feet)	Contraction scour depth (feet)	Abutment scour depth (feet)	Pier scour depth (feet)	Depth of total scour (feet)	Elevation of scour[2] (feet)	Remaining footing/pile depth (feet)
100-yr. discharge is 3,400 cubic-feet per second											
Left abutment	0.0	97.2	497.5	479.3	483.7	0.0	16.5	--	16.5	467.2	-12.1
Right abutment	23.5	97.1	497.4	479.3	483.9	0.0	10.5	--	10.5	473.4	-5.9

1.Measured along the face of the most constricting side of the bridge.
2.Arbitrary datum for this study.

Table 2. Remaining footing/pile depth at abutments for the 500-year discharge at structure WODSTH00050071 on Town Highway 5, crossing Kedron Brook, Woodstock, Vermont.

[VTAOT, Vermont Agency of Transportation; --, no data]

Description	Station[1]	VTAOT minimum low-chord elevation (feet)	Surveyed minimum low-chord elevation[2] (feet)	Bottom of footing/pile elevation[2] (feet)	Channel elevation at abutment/ pier[2] (feet)	Contraction scour depth (feet)	Abutment scour depth (feet)	Pier scour depth (feet)	Depth of total scour (feet)	Elevation of scour[2] (feet)	Remaining footing/pile depth (feet)
500-yr. discharge is 4,400 cubic-feet per second											
Left abutment	0.0	97.2	497.5	479.3	483.7	0.0	18.2	--	18.2	465.5	-13.8
Right abutment	23.5	97.1	497.4	479.3	483.9	0.0	12.8	--	12.8	471.1	-8.2

1.Measured along the face of the most constricting side of the bridge.
2.Arbitrary datum for this study.

SELECTED REFERENCES

Arcement, G.J., Jr., and Schneider, V.R., 1989, Guide for selecting Manning's roughness coefficients for natural channels and flood plains: U.S. Geological Survey Water-Supply Paper 2339, 38 p.

Barnes, H.H., Jr., 1967, Roughness characteristics of natural channels: U.S. Geological Survey Water-Supply Paper 1849, 213 p.

Benson, M. A., 1962, Factors Influencing the Occurrence of Floods in a Humid Region of Diverse Terrain: U.S. Geological Survey Water-Supply Paper 1580-B, 64 p.

Brown, S.A. and Clyde, E.S., 1989, Design of riprap revetment: Federal Highway Administration Hydraulic Engineering Circular No. 11, Publication FHWA-IP-89-016, 156 p.

Federal Highway Administration, 1983, Runoff estimates for small watersheds and development of sound design: Federal Highway Administration Report FHWA-RD-77-158.

Federal Highway Administration, 1993, Stream Stability and Scour at Highway Bridges: Participant Workbook: Federal Highway Administration Report FHWA-HI-91-011.

Federal Emergency Management Agency, 1979, Flood Insurance Study, Town of Woodstock, Windsor County, Vermont: Washington, D.C., September, 1979.

Froehlich, D.C., 1989, Local scour at bridge abutments *in* Ports, M.A., ed., Hydraulic Engineering--Proceedings of the 1989 National Conference on Hydraulic Engineering: New York, American Society of Civil Engineers, p. 13-18.

Hayes, D.C.,1993, Site selection and collection of bridge-scour data in Delaware, Maryland, and Virginia: U.S. Geological Survey Water-Resources Investigation Report 93-4017, 23 p.

Johnson, C.G. and Tasker, G.D.,1974, Progress report on flood magnitude and frequency of Vermont streams: U.S. Geological Survey Open-File Report 74-130, 37 p.

Lagasse, P.F., Schall, J.D., Johnson, F., Richardson, E.V., Chang, F., 1995, Stream Stability at Highway Structures: Federal Highway Administration Hydraulic Engineering Circular No. 20, Publication FHWA-IP-90-014, 144 p.

Laursen, E.M., 1960, Scour at bridge crossings: Journal of the Hydraulics Division, American Society of Civil Engineers, v. 86, no. HY2, p. 39-53.

Potter, W. D., 1957a, Peak rates of runoff in the Adirondack, White Mountains, and Maine woods area, Bureau of Public Roads

Potter, W. D., 1957b, Peak rates of runoff in the New England Hill and Lowland area, Bureau of Public Roads

Richardson, E.V. and Davis, S.R., 1995, Evaluating scour at bridges: Federal Highway Administration Hydraulic Engineering Circular No. 18, Publication FHWA-IP-90-017, 204 p.

Richardson, E.V., Simons, D.B., and Julien, P.Y., 1990, Highways in the river environment: Federal Highway Administration Publication FHWA-HI-90-016.

Ritter, D.F., 1984, Process Geomorphology: W.C. Brown Co., Debuque, Iowa, 603 p.

Shearman, J.O., 1990, User's manual for WSPRO--a computer model for water surface profile computations: Federal Highway Administration Publication FHWA-IP-89-027, 187 p.

Shearman, J.O., Kirby, W.H., Schneider, V.R., and Flippo, H.N., 1986, Bridge waterways analysis model; research report: Federal Highway Administration Publication FHWA-RD-86-108, 112 p.

Talbot, A.N., 1887, The determination of water-way for bridges and culverts.

U.S. Department of Transportation, 1993, Stream stability and scour at highway bridges, Participant Workbook: Federal Highway Administration Publication FHWA HI-91-011.

U.S. Geological Survey, 1966, Woodstock North, Vermont 7.5 Minute Series quadrangle map: U.S. Geological Survey Topographic Maps, Scale 1:24,000.

U.S. Geological Survey, 1966, Woodstock South, Vermont 7.5 Minute Series quadrangle map: U.S. Geological Survey Topographic Maps, Scale 1:24,000.

APPENDIX A:

WSPRO INPUT FILE

WSPRO INPUT FILE

```
T1        U.S. Geological Survey WSPRO Input File wods071.wsp
T2        Hydraulic analysis for structure WODSTH00050071   Date: 17-JUN-97
T3        HYDRAULIC ANALYSIS OF BRIDGE 71 IN WOODSTOCK, VT OVER KEDRON BROOK
*
J3         6 29 30 552 553 551 5 16 17 13 3 * 15 14 23 21 11 12 4 7 3
*
Q           3400  4400 2500
SK          0.032 0.032 0.032
*
XS   EXIT2  -127
GR         -310.0, 502.40    -70.7, 490.19    -30.8, 489.04      0.0, 483.70
GR            1.0, 478.24      4.4, 477.76     14.2, 476.51     34.3, 477.16
GR           36.8, 486.96     81.6, 489.85    119.5, 500.79
N              0.035      0.055      0.070
SA                 0.0         36.8
*
*            Left ends of EXIT1 and EXIT2 were extended based upon the Flood
*            Insurance Study Model.
*
XS   EXIT1  -53
GR         -260.0, 502.40    -50.0, 495.26    -38.8, 493.14    -21.4, 492.69
GR            0.0, 490.96      0.1, 479.05      2.7, 478.68     23.1, 480.80
GR           33.6, 486.16     34.0, 492.60     50.2, 500.51    150.0, 500.79
N             0.035       0.055
SA                 0.0
*
XS   FULLV   0 * * * 0.032
*
BR   BRIDG   0 497.48 45
GR            0.0, 497.53      0.0, 483.70      9.7, 483.35     23.0, 483.86
GR           23.5, 497.42      0.0, 497.53
N            0.020
CD           1 72 * * 75 15
*
XR   RDWAY     28 38
GR         -250.0, 503.00   -250.0, 502.40   -120.3, 500.91    -71.8, 500.65
GR            0.0, 500.39     12.2, 500.42     25.3, 500.45     70.1, 500.60
GR          146.7, 500.45    187.5, 500.79    187.5, 503.00
*
AS   APPRO   73
GR         -240.0, 504.00   -240.0, 502.40   -114.7, 498.44    -97.6, 490.75
GR          -10.4, 490.34      1.5, 486.46      2.5, 486.33      3.4, 483.56
GR            9.1, 483.03     20.4, 483.94     20.5, 483.93     24.4, 491.71
GR           31.0, 493.51     44.9, 495.57    187.5, 500.79    187.5, 504.00
N              0.065      0.045        0.055
SA                -10.4         31.0
*
HP 1 BRIDG    497.48 1 497.48
HP 2 BRIDG    497.48 * * 2658
HP 1 BRIDG    492.95 1 492.95
HP 2 RDWAY    501.23 * * 730
HP 1 APPRO    501.35 1 501.35
HP 2 APPRO    501.35 * * 3400
HP 1 BRIDG    497.53 1 497.53
HP 2 BRIDG    497.53 * * 2755
HP 1 BRIDG    493.17 1 493.17
HP 2 RDWAY    501.67 * * 1594
```

APPENDIX B:

WSPRO OUTPUT FILE

WSPRO OUTPUT FILE

```
        U.S. Geological Survey WSPRO Input File wods071.wsp
        Hydraulic analysis for structure WODSTH00050071   Date: 17-JUN-97
        HYDRAULIC ANALYSIS OF BRIDGE 71 IN WOODSTOCK, VT OVER KEDRON BROOK

    CROSS-SECTION PROPERTIES:  ISEQ =  4;  SECID = BRIDG;  SRD =       0.
     WSEL  SA#     AREA        K   TOPW   WETP  ALPH    LEW    REW     QCR
            1     228.   45218.     8.    53.                       7125.
   497.48         228.   45218.     8.    53.  1.00     0.    24.   7125.

    VELOCITY DISTRIBUTION:  ISEQ =  4;  SECID = BRIDG;  SRD =       0.
         WSEL     LEW     REW    AREA        K        Q    VEL
       497.48     0.0    23.5   228.4   45218.    2658.  11.64
X STA.         0.0        2.5        3.8        4.9        5.8        6.7
  A(I)            24.5       12.9       10.6        9.4        8.6
  V(I)            5.44      10.34      12.58      14.16      15.43

X STA.         6.7        7.5        8.3        9.1        9.9       10.7
  A(I)             8.2        8.1        7.8        7.7        7.7
  V(I)           16.29      16.46      16.99      17.16      17.17

X STA.        10.7       11.6       12.5       13.5       14.5       15.5
  A(I)             9.1        9.4        9.6        9.7       10.0
  V(I)           14.58      14.18      13.78      13.68      13.24

X STA.        15.5       16.6       17.8       19.0       20.5       23.5
  A(I)            10.7       11.4       12.4       14.6       26.0
  V(I)           12.46      11.69      10.71       9.12       5.10

    CROSS-SECTION PROPERTIES:  ISEQ =  4;  SECID = BRIDG;  SRD =       0.
     WSEL  SA#     AREA        K   TOPW   WETP  ALPH    LEW    REW     QCR
            1     154.   30895.    17.    35.                       2660.
   492.95         154.   30895.    17.    35.  1.00     0.    23.   2660.

    VELOCITY DISTRIBUTION:  ISEQ =  5;  SECID = RDWAY;  SRD =      28.
         WSEL     LEW     REW    AREA        K        Q    VEL
       501.23  -148.2   187.5   208.2    4919.     730.   3.51
X STA.      -148.2      -95.2      -74.6      -59.2      -46.1      -34.3
  A(I)            14.2       10.5        9.2        8.5        8.2
  V(I)            2.58       3.47       3.97       4.29       4.44

X STA.       -34.3      -23.8      -14.3       -5.5        4.0       17.0
  A(I)             7.7        7.4        7.1        7.9       10.6
  V(I)            4.77       4.94       5.15       4.62       3.45

X STA.        17.0       30.7       46.2       63.1       82.5      100.0
  A(I)            10.7       11.4       11.5       12.5       11.7
  V(I)            3.42       3.21       3.17       2.93       3.11

X STA.       100.0      116.2      131.4      146.0      162.2      187.5
  A(I)            11.5       11.2       11.2       11.6       13.8
  V(I)            3.18       3.27       3.27       3.15       2.64

    CROSS-SECTION PROPERTIES:  ISEQ =  6;  SECID = APPRO;  SRD =      73.
     WSEL  SA#     AREA        K   TOPW   WETP  ALPH    LEW    REW     QCR
            1    1192.   90363.   196.   198.                      16658.
            2     601.  105574.    41.    49.                      12988.
            3     547.   33982.   157.   157.                       5798.
   501.35         2339.  229918.   394.   405.  1.76  -207.   188.  24366.

    VELOCITY DISTRIBUTION:  ISEQ =  6;  SECID = APPRO;  SRD =      73.
         WSEL     LEW     REW    AREA        K        Q    VEL
       501.35  -206.8   187.5  2339.2  229918.    3400.   1.45
X STA.      -206.8      -93.4      -77.6      -64.2      -52.0      -40.5
  A(I)           294.2      168.2      144.1      130.9      124.7
  V(I)            0.58       1.01       1.18       1.30       1.36

X STA.       -40.5      -29.6      -19.2       -9.5       -4.0        0.6
  A(I)           118.9      113.5      107.3       67.1       63.1
  V(I)            1.43       1.50       1.58       2.53       2.70

X STA.         0.6        4.9        7.9       10.9       13.9       17.2
  A(I)            70.7       53.9       54.5       54.6       57.7
  V(I)            2.40       3.15       3.12       3.11       2.95

X STA.        17.2       20.7       30.5       52.4       86.7      187.5
  A(I)            62.0      103.3      140.7      167.4      242.3
  V(I)            2.74       1.65       1.21       1.02       0.70
```

WSPRO OUTPUT FILE (continued)

```
        U.S. Geological Survey WSPRO Input File wods071.wsp
        Hydraulic analysis for structure WODSTH00050071   Date: 17-JUN-97
        HYDRAULIC ANALYSIS OF BRIDGE 71 IN WOODSTOCK, VT OVER KEDRON BROOK

    CROSS-SECTION PROPERTIES:  ISEQ =  4;  SECID = BRIDG;  SRD =       0.
     WSEL  SA#     AREA        K   TOPW   WETP  ALPH    LEW    REW     QCR
            1     229.   41389.     0.    60.                          0.
   497.53          229.   41389.     0.    60.  1.00     0.    24.      0.

    VELOCITY DISTRIBUTION:  ISEQ =  4;  SECID = BRIDG;  SRD =       0.
         WSEL     LEW     REW    AREA        K        Q    VEL
       497.53     0.0    23.5   228.5   41389.    2755.  12.05
X STA.         0.0        2.5        3.8        5.0        6.0        7.0
  A(I)             24.3       13.3       11.6       10.4        9.8
  V(I)             5.66      10.40      11.86      13.28      14.06

X STA.         7.0        8.0        8.9        9.8       10.7       11.5
  A(I)              9.5        9.1        8.9        8.7        8.7
  V(I)            14.57      15.07      15.56      15.75      15.79

X STA.        11.5       12.4       13.3       14.2       15.2       16.1
  A(I)              8.8        8.8        8.9        9.2        9.3
  V(I)            15.60      15.64      15.50      15.03      14.89

X STA.        16.1       17.1       18.2       19.3       20.7       23.5
  A(I)              9.8       10.6       11.3       13.6       24.1
  V(I)            14.11      12.96      12.24      10.15       5.71

    CROSS-SECTION PROPERTIES:  ISEQ =  4;  SECID = BRIDG;  SRD =       0.
     WSEL  SA#     AREA        K   TOPW   WETP  ALPH    LEW    REW     QCR
            1     157.   31852.    17.    35.                       2754.
   493.17          157.   31852.    17.    35.  1.00     0.    23.   2754.

    VELOCITY DISTRIBUTION:  ISEQ =  5;  SECID = RDWAY;  SRD =      28.
         WSEL     LEW     REW    AREA        K        Q    VEL
       501.67  -186.5   187.5   364.3   11862.    1594.   4.38
X STA.      -186.5     -117.8      -95.5      -77.6      -62.7      -49.0
  A(I)             27.1       18.6       16.9       15.2       14.8
  V(I)             2.94       4.29       4.72       5.24       5.39

X STA.       -49.0      -36.5      -24.8      -14.0       -4.0        8.9
  A(I)             14.0       13.7       13.1       12.5       16.4
  V(I)             5.69       5.82       6.10       6.37       4.86

X STA.         8.9       24.2       40.4       58.1       77.3       95.6
  A(I)             18.9       19.4       20.1       20.9       20.1
  V(I)             4.21       4.10       3.96       3.82       3.96

X STA.        95.6      113.6      130.1      146.8      163.8      187.5
  A(I)             20.5       19.4       20.1       19.4       23.2
  V(I)             3.90       4.11       3.96       4.10       3.43

    CROSS-SECTION PROPERTIES:  ISEQ =  6;  SECID = APPRO;  SRD =      73.
     WSEL  SA#     AREA        K   TOPW   WETP  ALPH    LEW    REW     QCR
            1    1296.   98631.   213.   214.                      18160.
            2     622.  111829.    41.    49.                      13678.
            3     627.   42554.   157.   158.                       7113.
   501.86         2544.  253014.   410.   421.  1.75  -223.   188.  27159.

    VELOCITY DISTRIBUTION:  ISEQ =  6;  SECID = APPRO;  SRD =      73.
         WSEL     LEW     REW    AREA        K        Q    VEL
       501.86  -222.9   187.5  2544.4  253014.    4400.   1.73
X STA.      -222.9      -96.0      -79.3      -65.5      -52.5      -40.8
  A(I)            326.9      186.3      155.3      146.9      133.1
  V(I)             0.67       1.18       1.42       1.50       1.65

X STA.       -40.8      -29.6      -18.6       -9.0       -3.5        1.1
  A(I)            126.9      126.6      110.1       71.5       66.9
  V(I)             1.73       1.74       2.00       3.08       3.29

X STA.         1.1        5.4        8.6       11.7       15.0       18.3
  A(I)             73.9       58.6       59.0       60.0       61.3
  V(I)             2.98       3.75       3.73       3.67       3.59

X STA.        18.3       24.8       37.2       61.9       97.2      187.5
  A(I)             97.8      106.0      154.4      177.1      245.7
  V(I)             2.25       2.08       1.42       1.24       0.90
```

WSPRO OUTPUT FILE (continued)

```
        U.S. Geological Survey WSPRO Input File wods071.wsp
        Hydraulic analysis for structure WODSTH00050071   Date: 17-JUN-97
        HYDRAULIC ANALYSIS OF BRIDGE 71 IN WOODSTOCK, VT OVER KEDRON BROOK

    CROSS-SECTION PROPERTIES:  ISEQ =  4;  SECID = BRIDG;  SRD =       0.
     WSEL  SA#     AREA        K   TOPW   WETP  ALPH    LEW    REW     QCR
            1     148.   29295.    16.    34.                       2503.
   492.58         148.   29295.    16.    34.  1.00     0.    23.   2503.

    VELOCITY DISTRIBUTION:  ISEQ =  4;  SECID = BRIDG;  SRD =       0.
         WSEL     LEW     REW    AREA        K        Q    VEL
       492.58     0.0    23.3   147.5   29295.    2500.  16.95
X STA.         0.0        2.6        4.0        5.2        6.2        7.2
  A(I)             16.5        8.9        7.5        6.7        6.1
  V(I)             7.59      14.12      16.65      18.71      20.35

X STA.         7.2        8.1        9.0        9.8       10.7       11.5
  A(I)              5.9        5.7        5.6        5.5        5.5
  V(I)            21.06      21.76      22.42      22.71      22.79

X STA.        11.5       12.4       13.2       14.1       15.0       15.9
  A(I)              5.5        5.5        5.7        5.7        5.9
  V(I)            22.79      22.87      21.92      21.77      21.08

X STA.        15.9       16.9       17.9       19.1       20.6       23.3
  A(I)              6.1        6.7        7.5        8.8       16.2
  V(I)            20.38      18.74      16.68      14.15       7.74

    CROSS-SECTION PROPERTIES:  ISEQ =  6;  SECID = APPRO;  SRD =      73.
     WSEL  SA#     AREA        K   TOPW   WETP  ALPH    LEW    REW     QCR
            1     655.   51346.   102.   104.                       9413.
            2     441.   62958.    41.    49.                       8156.
            3      91.    3029.    66.    66.                        603.
   497.48         1186.  117334.   210.   219.  1.40  -113.    97.  13545.

    VELOCITY DISTRIBUTION:  ISEQ =  6;  SECID = APPRO;  SRD =      73.
         WSEL     LEW     REW    AREA        K        Q    VEL
       497.48  -112.6    97.1  1186.4  117334.    2500.   2.11
X STA.      -112.6      -90.4      -79.2      -68.6      -57.9      -47.7
  A(I)             98.8       76.0       72.8       73.5       70.7
  V(I)             1.27       1.64       1.72       1.70       1.77

X STA.       -47.7      -37.7      -27.6      -17.8       -8.8       -3.5
  A(I)             69.9       71.4       69.1       64.7       44.6
  V(I)             1.79       1.75       1.81       1.93       2.80

X STA.        -3.5        0.4        4.2        6.5        8.9       11.2
  A(I)             39.5       45.7       32.8       33.3       33.0
  V(I)             3.17       2.73       3.81       3.75       3.78

X STA.        11.2       13.6       16.2       19.0       24.4       97.1
  A(I)             34.2       36.7       38.8       57.6      123.1
  V(I)             3.66       3.41       3.22       2.17       1.02
```

WSPRO OUTPUT FILE (continued)

```
        U.S. Geological Survey WSPRO Input File wods071.wsp
        Hydraulic analysis for structure WODSTH00050071   Date: 17-JUN-97
        HYDRAULIC ANALYSIS OF BRIDGE 71 IN WOODSTOCK, VT OVER KEDRON BROOK

 XSID:CODE   SRDL    LEW     AREA   VHD    HF     EGL    CRWS       Q    WSEL
       SRD   FLEN    REW        K  ALPH    HO     ERR     FR#     VEL

EXIT2:XS   ******    -1.     236.  3.24 *****  487.10  483.84   3400.  483.86
     -127. ******    36.   18997.  1.00 ***** *******    1.01   14.43
 ===125 FR# EXCEEDS FNTEST AT SECID "EXIT1":  TRIALS CONTINUED.
             FNTEST,FR#,WSEL,CRWS =  0.80    1.44     486.21     487.70
 ===110 WSEL NOT FOUND AT SECID "EXIT1":  REDUCED DELTAY.
                  WSLIM1,WSLIM2,DELTAY =   483.36     502.40    0.50
 ===115 WSEL NOT FOUND AT SECID "EXIT1":  USED WSMIN = CRWS.
                  WSLIM1,WSLIM2,CRWS =   483.36     502.40     487.70
 ===130 CRITICAL WATER-SURFACE ELEVATION  A _ S _ S _ U _ M _ E _ D  !!!!!
             ENERGY EQUATION  N_O_T  B_A_L_A_N_C_E_D  AT SECID "EXIT1"
                  WSBEG,WSEND,CRWS =   487.70     502.40     487.70
EXIT1:XS      74.     0.     230.  3.40 *****  491.10  487.70   3400.  487.70
      -53.    74.    34.   18448.  1.00 ***** *******    1.00   14.79
 ===125 FR# EXCEEDS FNTEST AT SECID "FULLV":  TRIALS CONTINUED.
             FNTEST,FR#,WSEL,CRWS =  0.80    0.94     489.65     489.39
 ===110 WSEL NOT FOUND AT SECID "FULLV":  REDUCED DELTAY.
                  WSLIM1,WSLIM2,DELTAY =   487.20     504.10    0.50
 ===115 WSEL NOT FOUND AT SECID "FULLV":  USED WSMIN = CRWS.
                  WSLIM1,WSLIM2,CRWS =   487.20     504.10     489.39
FULLV:FV      53.     0.     238.  3.18  1.72  492.80  489.39   3400.  489.62
        0.    53.    34.   19358.  1.00  0.00   -0.01    0.95   14.31
 ===125 FR# EXCEEDS FNTEST AT SECID "APPRO":  TRIALS CONTINUED.
             FNTEST,FR#,WSEL,CRWS =  0.80    0.92     492.72     492.66
 ===110 WSEL NOT FOUND AT SECID "APPRO":  REDUCED DELTAY.
                  WSLIM1,WSLIM2,DELTAY =   489.12     504.00    0.50
 ===115 WSEL NOT FOUND AT SECID "APPRO":  USED WSMIN = CRWS.
                  WSLIM1,WSLIM2,CRWS =   489.12     504.00     492.66
 ===135 CONVEYANCE RATIO OUTSIDE OF RECOMMENDED LIMITS.
                            "APPRO"     KRATIO =  1.66
APPRO:AS      73.  -102.     440.  1.42  1.36  494.16  492.66   3400.  492.73
       73.    73.    28.   32092.  1.53  0.00   -0.01    0.92    7.72
         <<<<<THE ABOVE RESULTS REFLECT "NORMAL" (UNCONSTRICTED) FLOW>>>>>
 ===215 FLOW CLASS 1 SOLUTION INDICATES POSSIBLE ROAD OVERFLOW.
           WS1,WSSD,WS3,RGMIN =   500.60       0.00     494.61     500.39
 ===260 ATTEMPTING FLOW CLASS 4 SOLUTION.
 ===240 NO DISCHARGE BALANCE IN 15 ITERATIONS.
                  WS,QBO,QRD =   502.69         0.      3400.
 ===280 REJECTED FLOW CLASS 4 SOLUTION.
 ===245 ATTEMPTING FLOW CLASS 2 (5) SOLUTION.
 ===265 ROAD OVERFLOW APPEARS EXCESSIVE.
                  QRD,QRDMAX,RATIO =     730.       548.    1.33
           <<<<<RESULTS REFLECTING THE CONSTRICTED FLOW FOLLOW>>>>>
BRIDG:BR      53.     0.     228.  2.11 *****  499.59  492.95   2658.  497.48
        0. ******    24.   45218.  1.00 ***** *******    0.66   11.64
     TYPE PPCD FLOW      C    P/A    LSEL   BLEN   XLAB   XRAB
       1. ****   5.  0.490  0.000  497.48 ****** ****** ******
    XSID:CODE    SRD   FLEN    HF   VHD     EGL     ERR       Q    WSEL
   RDWAY:RG      28.    35.  0.01  0.06  501.40    0.00    730.  501.23
             Q   WLEN    LEW    REW  DMAX  DAVG  VMAX  VAVG  HAVG  CAVG
   LT:    303.   160.  -148.    11.   0.8   0.5   4.0   3.5   0.7   3.1
   RT:    428.   176.    11.   188.   0.8   0.7   4.2   3.5   0.9   3.0
APPRO:AS       1.  -207.    2340.  0.06  0.00  501.41  492.66   3400.  501.35
       73.     5.   188.  229972.  1.76  0.00    0.00    0.14    1.45
                    <<<<<END OF BRIDGE COMPUTATIONS>>>>>

  FIRST USER DEFINED TABLE.
    XSID:CODE    SRD    LEW    REW       Q        K     AREA     VEL    WSEL
   EXIT2:XS    -127.    -1.    36.   3400.   18997.     236.   14.43  483.86
   EXIT1:XS     -53.     0.    34.   3400.   18448.     230.   14.79  487.70
   FULLV:FV       0.     0.    34.   3400.   19358.     238.   14.31  489.62
   BRIDG:BR       0.     0.    24.   2658.   45218.     228.   11.64  497.48
   RDWAY:RG      28.*******   303.    730.******************    1.00  501.23
   APPRO:AS      73.  -207.   188.   3400.  229972.    2340.    1.45  501.35

 SECOND USER DEFINED TABLE.
    XSID:CODE    CRWS     FR#    YMIN    YMAX    HF    HO  VHD      EGL    WSEL
   EXIT2:XS    483.84    1.01  476.51  502.40************  3.24  487.10  483.86
   EXIT1:XS    487.70    1.00  478.68  502.40************  3.40  491.10  487.70
   FULLV:FV    489.39    0.95  480.38  504.10  1.72  0.00  3.18  492.80  489.62
   BRIDG:BR    492.95    0.66  483.35  497.53************  2.11  499.59  497.48
   RDWAY:RG  ****************  500.39  503.00  0.01******  0.06  501.40  501.23
   APPRO:AS    492.66    0.14  483.03  504.00  0.00  0.00  0.06  501.41  501.35
```

WSPRO OUTPUT FILE (continued)

```
        U.S. Geological Survey WSPRO Input File wods071.wsp
        Hydraulic analysis for structure WODSTH00050071   Date: 17-JUN-97
        HYDRAULIC ANALYSIS OF BRIDGE 71 IN WOODSTOCK, VT OVER KEDRON BROOK

 ===015 WSI IN WRONG FLOW REGIME AT SECID "EXIT2":  USED WSI = CRWS.
                            WSI,CRWS =   485.00     485.42
 XSID:CODE   SRDL    LEW     AREA   VHD    HF     EGL    CRWS       Q    WSEL
       SRD   FLEN    REW        K  ALPH    HO     ERR     FR#     VEL
EXIT2:XS   ******   -10.     300.  3.41 *****  488.83  485.42   4400.  485.42
     -127. ******    36.   26869.  1.02 ***** *******    1.03   14.64
 ===125 FR# EXCEEDS FNTEST AT SECID "EXIT1":  TRIALS CONTINUED.
              FNTEST,FR#,WSEL,CRWS =  0.80    1.53     486.96     488.96
 ===110 WSEL NOT FOUND AT SECID "EXIT1":  REDUCED DELTAY.
                  WSLIM1,WSLIM2,DELTAY =   484.92     502.40    0.50
 ===115 WSEL NOT FOUND AT SECID "EXIT1":  USED WSMIN = CRWS.
                  WSLIM1,WSLIM2,CRWS =   484.92     502.40     488.96
 ===130 CRITICAL WATER-SURFACE ELEVATION  A _ S _ S _ U _ M _ E _ D  !!!!!
              ENERGY EQUATION  N_O_T  B_A_L_A_N_C_E_D  AT SECID "EXIT1"
                  WSBEG,WSEND,CRWS =   488.96     502.40     488.96
EXIT1:XS      74.     0.     273.  4.05 *****  493.01  488.96   4400.  488.96
      -53.    74.    34.   23617.  1.00 ***** *******    1.00   16.14
 ===125 FR# EXCEEDS FNTEST AT SECID "FULLV":  TRIALS CONTINUED.
              FNTEST,FR#,WSEL,CRWS =  0.80    0.93     491.07     490.66
 ===110 WSEL NOT FOUND AT SECID "FULLV":  REDUCED DELTAY.
                  WSLIM1,WSLIM2,DELTAY =   488.46     504.10    0.50
 ===115 WSEL NOT FOUND AT SECID "FULLV":  USED WSMIN = CRWS.
                  WSLIM1,WSLIM2,CRWS =   488.46     504.10     490.66
FULLV:FV      53.     0.     285.  3.70  1.72  494.73  490.66   4400.  491.03
        0.    53.    34.   25197.  1.00  0.00   -0.01    0.94   15.43
         <<<<<THE ABOVE RESULTS REFLECT "NORMAL" (UNCONSTRICTED) FLOW>>>>>
 ===135 CONVEYANCE RATIO OUTSIDE OF RECOMMENDED LIMITS.
                            "APPRO"     KRATIO =  2.47
APPRO:AS      73.  -107.     731.  0.78  0.90  495.63 *******   4400.  494.84
       73.    73.    40.   62216.  1.39  0.00   -0.01    0.56    6.02
         <<<<<THE ABOVE RESULTS REFLECT "NORMAL" (UNCONSTRICTED) FLOW>>>>>
 ===215 FLOW CLASS 1 SOLUTION INDICATES POSSIBLE ROAD OVERFLOW.
           WS1,WSSD,WS3,RGMIN =   503.75       0.00     496.70     500.39
 ===260 ATTEMPTING FLOW CLASS 4 SOLUTION.
 ===220 FLOW CLASS 1 (4) SOLUTION INDICATES POSSIBLE PRESSURE FLOW.
           WS3,WSIU,WS1,LSEL =   495.13     501.33     501.34     497.48
 ===245 ATTEMPTING FLOW CLASS 2 (5) SOLUTION.
 ===265 ROAD OVERFLOW APPEARS EXCESSIVE.
                  QRD,QRDMAX,RATIO =    1594.      1045.    1.53
            <<<<<RESULTS REFLECTING THE CONSTRICTED FLOW FOLLOW>>>>>
BRIDG:BR      53.     0.     229.  2.26 *****  499.79  493.17   2755.  497.53
        0. ******    24.   41389.  1.00 ***** *******    0.68   12.06
     TYPE PPCD FLOW       C    P/A    LSEL   BLEN   XLAB   XRAB
       1. ****   5.  0.492  0.000  497.48 ****** ****** ******
    XSID:CODE    SRD   FLEN    HF   VHD     EGL     ERR       Q    WSEL
   RDWAY:RG      28.    35.  0.01  0.08  501.93   -0.01   1594.  501.67
             Q   WLEN    LEW    REW  DMAX  DAVG  VMAX  VAVG  HAVG  CAVG
   LT:    716.   198.  -187.    11.   1.3   0.8   4.9   4.3   1.1   3.2
   RT:    878.   176.    11.   188.   1.3   1.1   5.4   4.4   1.4   3.0
APPRO:AS       1.  -223.    2545.  0.08  0.01  501.94  493.30   4400.  501.86
       73.     6.   188.  253043.  1.75  0.58   -0.01    0.16    1.73
                     <<<<<END OF BRIDGE COMPUTATIONS>>>>>

  FIRST USER DEFINED TABLE.
    XSID:CODE    SRD    LEW    REW       Q        K     AREA     VEL    WSEL
   EXIT2:XS    -127.   -10.    36.   4400.   26869.     300.   14.64  485.42
   EXIT1:XS     -53.     0.    34.   4400.   23617.     273.   16.14  488.96
   FULLV:FV       0.     0.    34.   4400.   25197.     285.   15.43  491.03
   BRIDG:BR       0.     0.    24.   2755.   41389.     229.   12.06  497.53
   RDWAY:RG      28.*******   716.   1594.*****************    1.00  501.67
   APPRO:AS      73.  -223.   188.   4400.  253043.    2545.    1.73  501.86

 SECOND USER DEFINED TABLE.
    XSID:CODE    CRWS     FR#    YMIN    YMAX    HF    HO  VHD      EGL    WSEL
   EXIT2:XS    485.42    1.03  476.51  502.40************  3.41  488.83  485.42
   EXIT1:XS    488.96    1.00  478.68  502.40************  4.05  493.01  488.96
   FULLV:FV    490.66    0.94  480.38  504.10  1.72  0.00  3.70  494.73  491.03
   BRIDG:BR    493.17    0.68  483.35  497.53************  2.26  499.79  497.53
   RDWAY:RG  ****************  500.39  503.00  0.01******  0.08  501.93  501.67
   APPRO:AS    493.30    0.16  483.03  504.00  0.01  0.58  0.08  501.94  501.86
```

WSPRO OUTPUT FILE (continued)

```
        U.S. Geological Survey WSPRO Input File wods071.wsp
        Hydraulic analysis for structure WODSTH00050071   Date: 17-JUN-97
        HYDRAULIC ANALYSIS OF BRIDGE 71 IN WOODSTOCK, VT OVER KEDRON BROOK
 XSID:CODE   SRDL    LEW     AREA   VHD    HF     EGL    CRWS       Q    WSEL
       SRD   FLEN    REW        K  ALPH    HO     ERR     FR#     VEL
EXIT2:XS   ******     0.     192.  2.64 *****  485.28  482.59   2500.  482.64
     -127. ******    36.   13975.  1.00 ***** *******    0.99   13.03
 ===125 FR# EXCEEDS FNTEST AT SECID "EXIT1":  TRIALS CONTINUED.
              FNTEST,FR#,WSEL,CRWS =  0.80    1.42     485.14     486.43
 ===110 WSEL NOT FOUND AT SECID "EXIT1":  REDUCED DELTAY.
                   WSLIM1,WSLIM2,DELTAY =   482.14     502.40    0.50
 ===115 WSEL NOT FOUND AT SECID "EXIT1":  USED WSMIN = CRWS.
                   WSLIM1,WSLIM2,CRWS =   482.14     502.40     486.43
 ===130 CRITICAL WATER-SURFACE ELEVATION  A _ S _ S _ U _ M _ E _ D  !!!!!
              ENERGY EQUATION  N_O_T  B_A_L_A_N_C_E_D  AT SECID "EXIT1"
                   WSBEG,WSEND,CRWS =   486.43     502.40     486.43
EXIT1:XS      74.     0.     187.  2.77 *****  489.20  486.43   2500.  486.43
      -53.    74.    34.   13615.  1.00 ***** *******    1.00   13.35
 ===125 FR# EXCEEDS FNTEST AT SECID "FULLV":  TRIALS CONTINUED.
              FNTEST,FR#,WSEL,CRWS =  0.80    0.95     488.31     488.12
 ===110 WSEL NOT FOUND AT SECID "FULLV":  REDUCED DELTAY.
                   WSLIM1,WSLIM2,DELTAY =   485.93     504.10    0.50
 ===115 WSEL NOT FOUND AT SECID "FULLV":  USED WSMIN = CRWS.
                   WSLIM1,WSLIM2,CRWS =   485.93     504.10     488.12
FULLV:FV      53.     0.     193.  2.62  1.71  490.90  488.12   2500.  488.29
        0.    53.    34.   14218.  1.00  0.00   -0.01    0.95   12.97
         <<<<<THE ABOVE RESULTS REFLECT "NORMAL" (UNCONSTRICTED) FLOW>>>>>
 ===125 FR# EXCEEDS FNTEST AT SECID "APPRO":  TRIALS CONTINUED.
              FNTEST,FR#,WSEL,CRWS =  0.80    1.35     490.09     491.92
 ===110 WSEL NOT FOUND AT SECID "APPRO":  REDUCED DELTAY.
                   WSLIM1,WSLIM2,DELTAY =   487.79     504.00    0.50
 ===115 WSEL NOT FOUND AT SECID "APPRO":  USED WSMIN = CRWS.
                   WSLIM1,WSLIM2,CRWS =   487.79     504.00     491.92
 ===130 CRITICAL WATER-SURFACE ELEVATION  A _ S _ S _ U _ M _ E _ D  !!!!!
              ENERGY EQUATION  N_O_T  B_A_L_A_N_C_E_D  AT SECID "APPRO"
                   WSBEG,WSEND,CRWS =   491.92     504.00     491.92
APPRO:AS      73.  -100.     336.  1.36 *****  493.27  491.92   2500.  491.92
       73.    73.    25.   24144.  1.58 ***** *******    1.01    7.44
         <<<<<THE ABOVE RESULTS REFLECT "NORMAL" (UNCONSTRICTED) FLOW>>>>>
 ===285 CRITICAL WATER-SURFACE ELEVATION  A _ S _ S _ U _ M _ E _ D !!!!!
                   SECID "BRIDG"     Q,CRWS =    2500.     492.58
            <<<<<RESULTS REFLECTING THE CONSTRICTED FLOW FOLLOW>>>>>
BRIDG:BR      53.     0.     148.  4.46 *****  497.05  492.58   2500.  492.58
        0.    53.    23.   29316.  1.00 ***** *******    1.00   16.94
     TYPE PPCD FLOW      C    P/A    LSEL   BLEN   XLAB   XRAB
       1. ****   1.  1.000 ******  497.48 ****** ****** ******
    XSID:CODE    SRD   FLEN    HF   VHD     EGL     ERR       Q    WSEL
   RDWAY:RG      28.        <<<<<EMBANKMENT IS NOT OVERTOPPED>>>>>

APPRO:AS       1.  -113.    1187.  0.10  0.01  497.58  491.92   2500.  497.48
       73.     4.    97.  117391.  1.40  0.52    0.00    0.18    2.11

       M(G)   M(K)       KQ   XLKQ   XRKQ    OTEL
      0.815  0.547   53188.    -3.    20.   497.47

                    <<<<<END OF BRIDGE COMPUTATIONS>>>>>

  FIRST USER DEFINED TABLE.
    XSID:CODE    SRD    LEW    REW       Q        K     AREA     VEL    WSEL
   EXIT2:XS    -127.     0.    36.   2500.   13975.     192.   13.03  482.64
   EXIT1:XS     -53.     0.    34.   2500.   13615.     187.   13.35  486.43
   FULLV:FV       0.     0.    34.   2500.   14218.     193.   12.97  488.29
   BRIDG:BR       0.     0.    23.   2500.   29316.     148.   16.94  492.58
   RDWAY:RG      28.**************      0.******************    1.00********
   APPRO:AS      73.  -113.    97.   2500.  117391.    1187.    2.11  497.48

    XSID:CODE   XLKQ   XRKQ       KQ
   APPRO:AS      -3.    20.   53188.

 SECOND USER DEFINED TABLE.
    XSID:CODE    CRWS     FR#    YMIN    YMAX    HF    HO  VHD      EGL    WSEL
   EXIT2:XS    482.59    0.99  476.51  502.40************  2.64  485.28  482.64
   EXIT1:XS    486.43    1.00  478.68  502.40************  2.77  489.20  486.43
   FULLV:FV    488.12    0.95  480.38  504.10  1.71  0.00  2.62  490.90  488.29
   BRIDG:BR    492.58    1.00  483.35  497.53************  4.46  497.05  492.58
   RDWAY:RG  ****************  500.39  503.00************************************
   APPRO:AS    491.92    0.18  483.03  504.00  0.01  0.52  0.10  497.58  497.48
```

APPENDIX C:

BED-MATERIAL PARTICLE-SIZE DISTRIBUTION

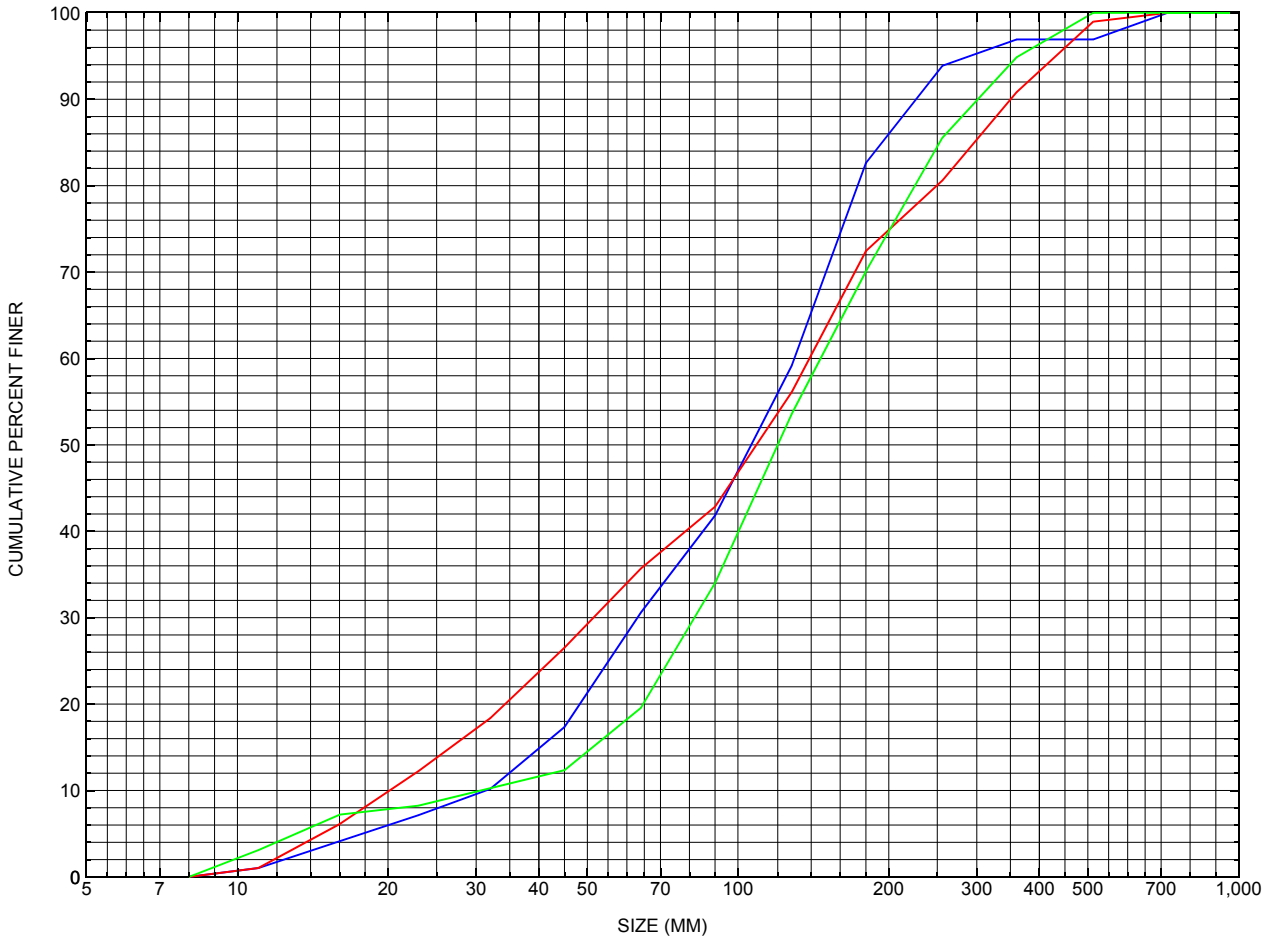

Appendix C. Bed material particle-size distribution for three pebble count transects in the channel approach of structure WODSTH00050071, in Woodstock, Vermont.

APPENDIX D:

HISTORICAL DATA FORM

United States Geological Survey
Bridge Historical Data Collection and Processing Form

Structure Number WODSTH00050071

General Location Descriptive

Data collected by *(First Initial, Full last name)* E. BOEHMLER

Date *(MM/DD/YY)* 08 / 03 / 94

Highway District Number *(I - 2; nn)* 04

County *(FIPS county code; I - 3; nnn)* 027

Town *(FIPS place code; I - 4; nnnnn)* 85900

Mile marker *(I - 11; nnn.nnn)* 000000

Waterway *(I - 6)* KEDRON BROOK

Road Name *(I - 7)*: -

Route Number TH005

Vicinity *(I - 9)* 0.1 MI TO JCT W CL1 TH3

Topographic Map Woodstock.North

Hydrologic Unit Code: 01080106

Latitude *(I - 16; nnnn.n)* 43376

Longitude *(i - 17; nnnnn.n)* 72311

Select Federal Inventory Codes

FHWA Structure Number *(I - 8)* 10142400711424

Maintenance responsibility *(I - 21; nn)* 03

Maximum span length *(I - 48; nnnn)* 0025

Year built *(I - 27; YYYY)* 1950

Structure length *(I - 49; nnnnnn)* 000030

Average daily traffic, ADT *(I - 29; nnnnnn)* 001200

Deck Width *(I - 52; nn.n)* 379

Year of ADT *(I - 30; YY)* 94

Channel & Protection *(I - 61; n)* 5

Opening skew to Roadway *(I - 34; nn)* 45

Waterway adequacy *(I - 71; n)* 6

Operational status *(I - 41; X)* A

Underwater Inspection Frequency *(I - 92B; XYY)* N

Structure type *(I - 43; nnn)* 104

Year Reconstructed *(I - 106)* 0000

Approach span structure type *(I - 44; nnn)* 000

Clear span (*nnn.n ft*) -

Number of spans *(I - 45; nnn)* 001

Vertical clearance from streambed (*nnn.n ft*) 12.3

Number of approach spans *(I - 46; nnnn)* 0000

Waterway of full opening (*nnn.n ft*^{2}) -

Comments:

Structural inspection report of 6/26/92 indicated undermining was present on the upstream end of the left wingwall. Channel scour was indicated as heavy at the bridge outlet. No embankment erosion or debris problems were noted. The channel makes a sharp turn into the bridge crossing. Stone fill is noted as good at the inlet but needed at outlet. No significant point bars were noted.

Bridge Hydrologic Data

Is there hydrologic data available? N *if No, type ctrl-n h* VTAOT Drainage area *(mi²)*: 16.08

Terrain character: -

Stream character & type: -

Streambed material: -

Discharge Data *(cfs)*: $Q_{2.33}$ - Q_{10} 1650 Q_{25} 2300

Q_{50} 3000 Q_{100} 3400 Q_{500} -

Record flood date *(MM / DD / YY)*: - / - / - Water surface elevation *(ft)*: -

Estimated Discharge *(cfs)*: - Velocity at Q - *(ft/s)*: -

Ice conditions *(Heavy, Moderate, Light)* : - Debris *(Heavy, Moderate, Light)*: Light

The stage increases to maximum highwater elevation (*Rapidly, Not rapidly*): -

The stream response is (*Flashy, Not flashy*): -

Describe any significant site conditions upstream or downstream that may influence the stream's stage: -

Watershed storage area (*in percent*): -%

The watershed storage area is: - (*1-mainly at the headwaters; 2- uniformly distributed; 3-immediatly upstream oi the site*)

Water Surface Elevation Estimates for Existing Structure:

Peak discharge frequency	$Q_{2.33}$	Q_{10}	Q_{25}	Q_{50}	Q_{100}
Water surface elevation (*ft*))	-	690.2	-	-	695.1
Velocity (*ft / sec*)	-	-	-	-	-

Long term stream bed changes: -

Is the roadway overtopped below the Q_{100}? (*Yes, No, Unknown*): U Frequency: -

Relief Elevation (*ft*): - Discharge over roadway at Q_{100} (*ft³/ sec*): -

Are there other structures nearby? (*Yes, No, Unknown*): U *If No or Unknown, type ctrl-n os*

Upstream distance (*miles*): - Town: - Year Built: -

Highway No. : - Structure No. : - Structure Type: -

Clear span (*ft*): - Clear Height (*ft*): - Full Waterway (*ft²*): -

Downstream distance (*miles*): - Town: - Year Built: -

Highway No. : - Structure No. : - Structure Type: -

Clear span (*ft*): - Clear Height (*ft*): - Full Waterway (ft^2): -

Comments:

-

USGS Watershed Data

Watershed Hydrographic Data

Drainage area *(DA)* 16.05 mi^2 Lake/pond/swamp area 0.01 mi^2

Watershed storage *(ST)* 0.1 %

Bridge site elevation 690 ft Headwater elevation 2440 ft

Main channel length 10.67 mi

10% channel length elevation 700 ft 85% channel length elevation 1580 ft

Main channel slope *(S)* 109.96 ft / mi

Watershed Precipitation Data

Average site precipitation _____ in Average headwater precipitation _____ in

Maximum 2yr-24hr precipitation event *(I24,2)* _____ in

Average seasonal snowfall *(Sn)* _____ ft

Bridge Plan Data

Are plans available? **Y** *If no, type ctrl-n pl* Date issued for construction *(MM / YYYY)*: **07** / **1981**

Project Number **TF 1950 & TF 2121** Minimum channel bed elevation: **83.0***

Low superstructure elevation: USLAB **97.24**** DSLAB **97.17** USRAB **97.22** DSRAB **97.09**

Benchmark location description:

BM #1, spike in the root or trunk of a 36 inch elm tree located about 150 feet left bankward from the left abutment along the roadway centerline, then about 15 feet perpendicular to the centerline in an upstream direction to the tree at the base of the roadway embankment, elevation 100.77.

Reference Point (*MSL, Arbitrary, Other*): **Arbitrary** Datum (*NAD27, NAD83, Other*): **Arbitrary**

Foundation Type: **1** (*1-Spreadfooting; 2-Pile; 3- Gravity; 4-Unknown*)

If 1: Footing Thickness **3.5** Footing bottom elevation: **79.0**

If 2: Pile Type: **-** (*1-Wood; 2-Steel or metal; 3-Concrete*) Approximate pile driven length: **-**

If 3: Footing bottom elevation: **-**

Is boring information available? **Y** *If no, type ctrl-n bi* Number of borings taken: **3**

Foundation Material Type: **1** (*1-regolith, 2-bedrock, 3-unknown*)

Briefly describe material at foundation bottom elevation or around piles:

Borings all show sand at shallow depths and then rocks, a boulder, or ledge at depth. Boring information was taken from the plans of 1950. The bottom of the borings taken on the right abutment side were higher than the proposed bottom of footing. The two borings on the right side show rocks and boulder or bedrock material at the bottom; refusal depth greater than an elevation of 80.0. The one boring taken on the left abutment side shows bedrock at the footing elevation.

Comments:

***The channel bed under the bridge was covered in 1981 with a 1 foot thick concrete slab resting on top of both footings with a top elevation of 678.0. Original abutment footings were 3.5 feet thick. Renovation work in 1981 poured additional 2 and 2.5 foot thick footings as extensions to the old footings. The inlet cut-off wall on the bottom channel slab extends down 4 feet. The hydraulic information entered above was from the plans. Other elevations from the plans are: downstream left wingwall top 694.95 and right wing-wall top 694.89.**

****Low superstructure elevations found on the T-1 1950 plans.**

Benchmark for 1981 plans shows a spike in a 15 inch butternut, elevation 691.14, located 130 feet west on TH 5 (Pleasant street) travelling from the left bank, then 20 feet off the left hand side of the road. BM#2, bolt on hydrant cap, elevation 695.83, located 120 feet east on TH 5 travelling from the right bank, then just on the curb, right

Cross-sectional Data

Is cross-sectional data available? **Y** *If no, type ctrl-n xs*

Source (*FEMA, VTAOT, Other*)? **VTAOT**

Comments: **Upstream bridge face cross section from left to right abutment. The footings extend into the channel 1.5 feet with a top elevation at 82.5 and a base at 79.0. A 1 foot thick concrete slab rest on top of both footings forming the bed elevation below.**

Station	**2.0**	**9.5**	**22.5**								
Feature	**LCL**		**LCR**								
Low chord elevation	**97.2**		**97.4**								
Bed elevation	**83.5**	**83.08**	**83.5**								
Low chord-bed	**13.7**		**13.9**								
Station											
Feature											
Low chord elevation											
Bed elevation											
Low chord-bed											

Source (*FEMA, VTAOT, Other*)? **VTAOT**

Comments: **Downstream bridge face cross section left to right abutment.The footings extend into the channel 1.5 feet with a top elevation at 82.5 and a base at 79.0.**

Station	**2.0**	**9.5**	**22.5**								
Feature	**LCL**		**LCR**								
Low chord elevation	**97.3**		**97.2**								
Bed elevation	**83.5**	**83.08**	**83.5**								
Low chord-bed	**13.8**		**13.7**								
Station											
Feature											
Low chord elevation											
Bed elevation											
Low chord-bed											

APPENDIX E:

LEVEL I DATA FORM

U. S. Geological Survey
Bridge Field Data Collection and Processing Form

Qa/Qc Check by: JDA Date: 2/14/95
Computerized by: MAI Date: 3/16/95
Reviewd by: SAO Date: 8/22/97

Structure Number WODSTH00050071

A. General Location Descriptive

1. Data collected by *(First Initial, Full last name)* J. AYOTTE Date *(MM/DD/YY)* 09 / 14 / 1994

2. Highway District Number 04
Mile marker 0
County WINDSOR (027)
Town WOODSTOCK (85900)
Waterway *(I - 6)* KEDRON BROOK
Road Name PLEASANT STREET
Route Number TH005
Hydrologic Unit Code: 01080106

3. Descriptive comments:
Bridge is a box culvert; downstream end of concrete channel spills about 4 ft. to the stream bed below. All wingwalls are concrete except the USRWW which is drywall. Downstream is essentially channelized by concrete walls.
0.1 miles to the junction of TH 5 and TH 3.

B. Bridge Deck Observations

4. Surface cover... LBUS 6 RBUS 5 LBDS 2 RBDS 2 Overall 2
*(2b us,ds,lb,rb: **1**- Urban; **2**- Suburban; **3**- Row crops; **4**- Pasture; **5**- Shrub- and brushland; **6**- Forest; **7**- Wetland)*

5. Ambient water surface...US 2 UB 1 DS 2 *(**1**- pool; **2**- riffle)*

6. Bridge structure type 6 *(**1**- single span; **2**- multiple span; **3**- single arch; **4**- multiple arch; **5**- cylindrical culvert; **6**- box culvert; or **7**- other)*

7. Bridge length 30 *(feet)* Span length 25 *(feet)* Bridge width 37.9 *(feet)*

Road approach to bridge:

8. LB 1 RB 2 *(**0** even, **1**- lower, **2**- higher)*

9. LB 1 RB 1 *(**1**- Paved, **2**- Not paved)*

10. Embankment slope (*run / rise in feet / foot*):
US left 2.3:1 US right 2.4:1

	Protection		13.Erosion	14.Severity
	11.Type	12.Cond.		
LBUS	0	-	0	0
RBUS	0	-	0	0
RBDS	0	-	0	0
LBDS	0	-	0	0

*Bank protection types: **0**- none; **1**- < 12 inches; **2**- < 36 inches; **3**- < 48 inches; **4**- < 60 inches; **5**- wall / artificial levee*
*Bank protection conditions: **1**- good; **2**- slumped; **3**- eroded; **4**- failed*
*Erosion: **0** - none; **1**- channel erosion; **2**- road wash; **3**- both; **4**- other*
*Erosion Severity: **0** - none; **1**- slight; **2**- moderate; **3**- severe*

Channel approach to bridge (BF):

15. Angle of approach: 42 16. Bridge skew: 45

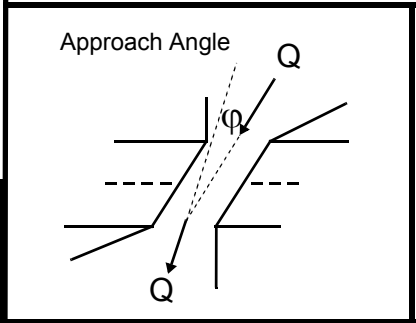

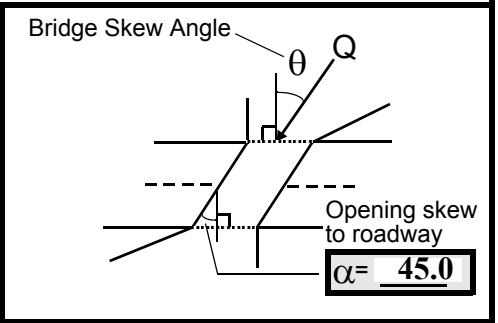

17. Channel impact zone 1: Exist? Y *(Y or N)*
Where? LB *(LB, RB)* Severity 3
Range? 35 feet US *(US, UB, DS)* to 0 feet US
Channel impact zone 2: Exist? N *(Y or N)*
Where? _____ *(LB, RB)* Severity ____
Range? _____ feet ____*(US, UB, DS)* to _____feet ____

*Impact Severity: **0**- none to very slight; **1**- Slight; **2**- Moderate; **3**- Severe*

18. Bridge Type: 4

1a- Vertical abutments with wingwalls

1b- Vertical abutments without wingwalls

2- Vertical abutments and wingwalls, sloping embankment
Wingwalls parallel to abut. face

3- Spill through abutments

4- Sloping embankment, vertical wingwalls and abutments
Wingwall angle less than 90°.

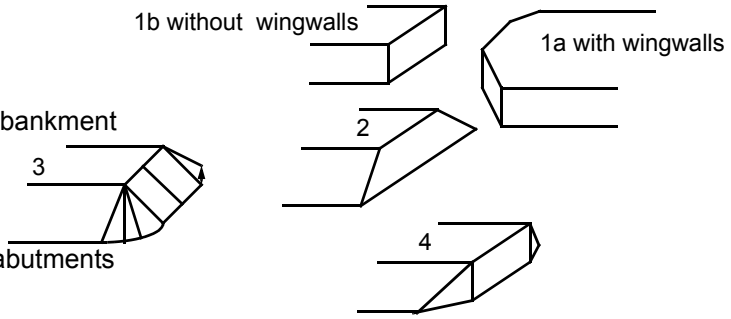

19. Bridge Deck Comments (surface cover variations, measured bridge and span lengths, bridge type variations, approach overflow width, etc.)

7. Measured length: 28, span: 24.5, width: 38 feet.
Box culvert with type 4 wingwalls. Upstream invert of the culvert is 20 ft below the top of rail post which rises 3.8 ft above surveyed reference mark with point number 156. Downstream invert was surveyed with the total station. Two drains (4 in and 8 in) enter the downstream end of the left abutment. Inside abutment length is 70 ft. Five drains (3 in) are evenly spaced along the abutments, 3 ft. above the base of the walls.

C. Upstream Channel Assessment

20. SRD	21. Bank height (BF) LB	21. Bank height (BF) RB	22. Bank angle (BF) LB	22. Bank angle (BF) RB	26. % Veg. cover (BF) LB	26. % Veg. cover (BF) RB	27. Bank material (BF) LB	27. Bank material (BF) RB	28. Bank erosion (BF) LB	28. Bank erosion (BF) RB
69	10.0			9.5	4	2	7	7	0	0

23. Bank width 70.0 24. Channel width 40.0 25. Thalweg depth 31.0 29. Bed Material 4

30 .Bank protection type: LB 2 RB 5 31. Bank protection condition: LB 1 RB 1

*SRD - Section ref. dist. to US face % Vegetation (Veg) cover: **1**- 0 to 25%; **2**- 26 to 50%; **3**- 51 to 75%; **4**- 76 to 100%*
*Bed and bank Material: **0**- organics; **1**- silt / clay, < 1/16mm; **2**- sand, 1/16 - 2mm; **3**- gravel, 2 - 64mm; **4**- cobble, 64 - 256mm; **5**- boulder, > 256mm; **6**- bedrock; **7**- manmade*
*Bank Erosion: **0**- not evident; **1**- light fluvial; **2**- moderate fluvial; **3**- heavy fluvial / mass wasting*
*Bank protection types: **0**- absent; **1**- < 12 inches; **2**- < 36 inches; **3**- < 48 inches; **4**- < 60 inches; **5**- wall / artificial levee*
*Bank protection conditions: **1**- good; **2**- slumped; **3**- eroded; **4**- failed*

32. Comments (bank material variation, minor inflows, protection extent, etc.):

30. Right bank protection is a 6 ft tall drywall extending several hundred feet upstream to the next bridge. The stone fill on the left bank is lower than the drywall.

33. Point/Side bar present? Y *(Y or N. if N type ctrl-n pb)* 34. Mid-bar distance: 20 35. Mid-bar width: 3

36. Point bar extent: 0 feet US *(US, UB)* to 35 feet US *(US, UB, DS)* positioned 90 %LB to 100 %RB

37. Material: 3

38. Point or side bar comments (Circle Point or Side; Note additional bars, material variation, status, etc.):

Some of the point bar consists of dumped stone; it is the cause (in part) of the bar development; it creates a flow shadow and sediment accumulates here.

39. Is a cut-bank present? N *(Y or if N type ctrl-n cb)* 40. Where? - *(LB or RB)*

41. Mid-bank distance: - 42. Cut bank extent: - feet - *(US, UB)* to - feet - *(US, UB, DS)*

43. Bank damage: - *(**1**- eroded and/or creep; **2**- slip failure; **3**- block failure)*

44. Cut bank comments (eg. additional cut banks, protection condition, etc.):

NO CUT BANKS

45. Is channel scour present? Y *(Y or if N type ctrl-n cs)* 46. Mid-scour distance: 20

47. Scour dimensions: Length 5 Width 3 Depth : 2 Position -1 %LB to 5 %RB

48. Scour comments (eg. additional scour areas, local scouring process, etc.):

Scour is due to impact with the upstream left bank and upstream left wingwall area.

49. Are there major confluences? N *(Y or if N type ctrl-n mc)* 50. How many? -

51. Confluence 1: Distance - 52. Enters on - *(LB or RB)* 53. Type - *(**1**- perennial; **2**- ephemeral)*

Confluence 2: Distance - Enters on - *(LB or RB)* Type - *(**1**- perennial; **2**- ephemeral)*

54. Confluence comments (eg. confluence name):

NO MAJOR CONFLUENCES

D. Under Bridge Channel Assessment

55. Channel restraint (BF)? LB 2 RB _____ *(**1**- natural bank; **2**- abutment; **3**- artificial levee)*

56. Height (BF)		57 Angle (BF)		61. Material (BF)		62. Erosion (BF)	
LB	RB	LB	RB	LB	RB	LB	RB
17.0		1.0		2	7	7	0

58. Bank width (BF) - 59. Channel width - 60. Thalweg depth 90.0 63. Bed Material 0

*Bed and bank Material: **0**- organics; **1**- silt / clay, < 1/16mm; **2**- sand, 1/16 - 2mm; **3**- gravel, 2 - 64mm; **4**- cobble, 64 - 256mm; **5**- boulder, > 256mm; **6**- bedrock; **7**- manmade*

*Bank Erosion: **0**- not evident; **1**- light fluvial; **2**- moderate fluvial; **3**- heavy fluvial / mass wasting*

64. Comments (bank material variation, minor inflows, protection extent, etc.):

7

Inside dimensions of the culvert are 70 ft. long by 17.2 ft. wide.

65. Debris and Ice Is there debris accumulation? ____ *(Y or N)* 66. Where? N ___ *(**1**- Upstream; **2**- At bridge; **3**- Both)*

67. Debris Potential - ___ *(**1**- Low; **2**- Moderate; **3**- High)* 68. Capture Efficiency 1 ___ *(**1**- Low; **2**- Moderate; **3**- High)*

69. Is there evidence of ice build-up? 1 ___ *(Y or N)* Ice Blockage Potential N ___ *(**1**- Low; **2**- Moderate; **3**- High)*

70. Debris and Ice Comments:

1

67. No debris accumulation near the bridge, upstream is laterally stable, has few cut banks, and consists of cobble material.

68. High gradient stream and the span is about 80% of the upstream bank width.

Site visit on 12/14/94 revealed a significant elevation of the water surface (1-2 ft.) due to anchor ice and ice

Abutments	71. Attack ∠(BF)	72. Slope ∠ (Qmax)	73. Toe loc. (BF)	74. Scour Condition	75. Scour depth	76. Exposure depth	77. Material	78. Length
LABUT	build	up	on	the	wate	r.	30	90.0
RABUT	90	2	0			0	0	16.6

Pushed: LB or RB *Toe Location (Loc.): **0**- even, **1**- set back, **2**- protrudes*
*Scour cond.: **0**- not evident; **1**- evident (comment); **2**- footing exposed; **3**-undermined footing; **4**- piling exposed; **5**- settled; **6**- failed*
Materials: ***1***- Concrete; ***2***- Stone masonry or drywall; ***3***- steel or metal; ***4***- wood

79. Abutment comments (eg. undermined penetration, unusual scour processes, debris, etc.):

1
-
90
2
0
0
0
1

No scour on abutments; bridge is a box culvert with a concrete bottom. Scour processes are occurring at the USLWW and downstream due to a drop at the end of the box culvert.

80. Wingwalls:

	Exist?	Material?	Scour Condition?	Scour depth?	Exposure depth?	81. Angle?	Length?
USLWW:						16.6	
USRWW:						0.5	
DSLWW:					Y	55.0	
DSRWW:	1		3		1	57.5	

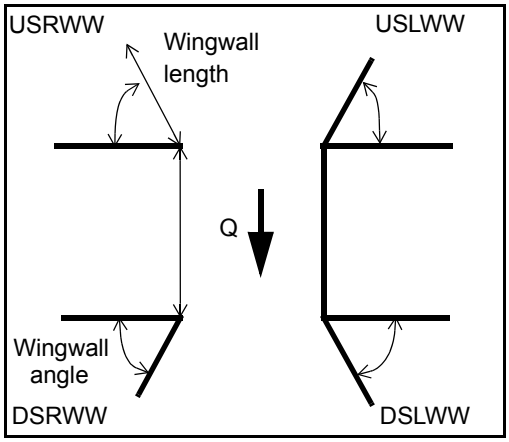

*Wingwall materials: **1**- Concrete; **2**- Stone masonry or drywall; **3**- steel or metal; **4**- wood*

82. Bank / Bridge Protection:

Location	USLWW	USRWW	LABUT	RABUT	LB	RB	DSLWW	DSRWW
Type	3.5	0	Y	0.5	1	3.5	-	2
Condition	Y	0	1	2	2	0	2	0
Extent	2	0	2	Y	2.5	-	1	-

*Bank / Bridge protection types: **0**- absent; **1**- < 12 inches; **2**- < 36 inches; **3**- < 48 inches; **4**- < 60 inches; **5**- wall / artificial levee*

*Bank / Bridge protection conditions: **1**- good; **2**- slumped; **3**- eroded; **4**- failed*

*Protection extent: **1**- entire base length; **2**- US end; **3**- DS end; **4**- other*

83. Wingwall and protection comments (eg. undermined penetration, unusual scour processes, etc.):

-
0
-
-
0
-
-
0
-
-
0

Piers:

84. Are there piers? _-___ *(Y or if N type ctrl-n pr)*

85. Pier no.	width (w) feet			elevation (e) feet		
	w1	w2	w3	e@w1	e@w2	e@w3
Pier 1				15.0	31.0	135.0
Pier 2				34.0	135.0	38.0
Pier 3			-	15.0	37.5	-
Pier 4	-	-	-	-	-	-

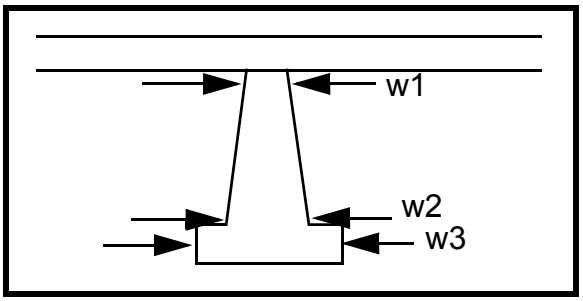

Level 1 Pier Descr.	1	2	3	4	
86. Location (BF)	-	with	m top	d pen-	*LFP, LTB, LB, MCL, MCM, MCR, RB, RTB, RFP*
87. Type	0	total	of	etrat	*1- Solid pier, 2- column, 3- bent*
88. Material	-	expo	foot-	e up	*1- Wood; 2- concrete; 3- metal; 4- stone*
89. Shape	-	sure	ing	to	*1- Round; 2- Square; 3- Pointed*
90. Inclined?	80.	dept	to	2.3	*Y- yes; N- no*
91. Attack ∠ (BF)	The	h of	strea	ft.	
92. Pushed	USL	appr	mbe	into	*LB or RB*
93. Length (feet)	-	-	-	-	
94. # of piles	WW	oxi-	d).	the	
95. Cross-members	is	mate	Ran	bank	*0- none; 1- laterals; 2- diagonals; 3- both*
96. Scour Condition	unde	ly	ge	unde	*0- not evident; 1- evident (comment); 2- footing exposed; 3- piling exposed; 4- undermined footing; 5- settled; 6- failed*
97. Scour depth	rmin	3.5 ft	pole	r the	
98. Exposure depth	ed	(fro	coul	wing	

99. Pier comments (eg. undermined penetration, protection and protection extent, unusual scour processes, etc.):

wall footing. This wingwall has a 2 in crack (vertical) probably due to settling associated with scour. Banks upstream and downstream are protected but the wingwalls are not protected. Downstream wingwalls are scoured with footings exposed. Footing exposure is variable due to variable elevation of finished footing tops.

N

E. Downstream Channel Assessment

100.

SRD	Bank height (BF) LB	Bank height (BF) RB	Bank angle (BF) LB	Bank angle (BF) RB	% Veg. cover (BF) LB	% Veg. cover (BF) RB	Bank material (BF) LB	Bank material (BF) RB	Bank erosion (BF) LB	Bank erosion (BF) RB
-	-			-	-	-	-	-	-	-

Bank width (BF) - Channel width - Thalweg depth - Bed Material -

Bank protection type (Qmax): LB - RB - Bank protection condition: LB - RB -

*SRD - Section ref. dist. to US face % Vegetation (Veg) cover: **1**- 0 to 25%; **2**- 26 to 50%; **3**- 51 to 75%; **4**- 76 to 100%*
*Bed and bank Material: **0**- organics; **1**- silt / clay, < 1/16mm; **2**- sand, 1/16 - 2mm; **3**- gravel, 2 - 64mm; **4**- cobble, 64 - 256mm; **5**- boulder, > 256mm; **6**- bedrock; **7**- manmade*
*Bank Erosion: **0**- not evident; **1**- light fluvial; **2**- moderate fluvial; **3**- heavy fluvial / mass wasting*
*Bank protection types: **0**- absent; **1**- < 12 inches; **2**- < 36 inches; **3**- < 48 inches; **4**- < 60 inches; **5**- wall / artificial levee*
*Bank protection conditions: **1**- good; **2**- slumped; **3**- eroded; **4**- failed*

Comments (eg. bank material variation, minor inflows, protection extent, etc.):

-
-
-
-
-
-
-
-
-
-
-
-
-
-
-

101. Is a drop structure present? - *(Y or N, if N type ctrl-n ds)* 102. Distance: - feet

103. Drop: - feet 104. Structure material: - *(**1**- steel sheet pile; **2**- wood pile; **3**- concrete; **4**- other)*

105. Drop structure comments (eg. downstream scour depth):

-
-
-
-
-
-

106. Point/Side bar present? - *(Y or N. if N type ctrl-n pb)* Mid-bar distance: - Mid-bar width: -

Point bar extent: - feet - *(US, UB, DS)* to - feet - *(US, UB, DS)* positioned - %LB to - %RB

Material: -

Point or side bar comments (Circle Point or Side; note additional bars, material variation, status, etc.):

-
-
-
-

Is a cut-bank present? N *(Y or if N type ctrl-n cb)* Where? O *(LB or RB)* Mid-bank distance: PIE

Cut bank extent: RS feet ____ *(US, UB, DS)* to _____ feet ____ *(US, UB, DS)*

Bank damage: _____ *(**1**- eroded and/or creep; **2**- slip failure; **3**- block failure)*

Cut bank comments (eg. additional cut banks, protection condition, etc.):

Is channel scour present? ____ *(Y or if N type ctrl-n cs)* Mid-scour distance: 1

Scour dimensions: Length 1 Width 7 Depth: 7 Positioned 0 %LB to 0 %RB

Scour comments (eg. additional scour areas, local scouring process, etc.):

54
2
3
3

Are there major confluences? 1 *(Y or if N type ctrl-n mc)* How many? Ban

Confluence 1: Distance ks Enters on are *(LB or RB)* Type 10 ft *(**1**- perennial; **2**- ephemeral)*

Confluence 2: Distance high Enters on con- *(LB or RB)* Type cret *(**1**- perennial; **2**- ephemeral)*

Confluence comments (eg. confluence name):

e walls that extend about 130 ft downstream from the bridge on both banks (including the wingwalls).

F. Geomorphic Channel Assessment

107. Stage of reach evolution ____

1- Constructed
2- Stable
3- Aggraded
4- Degraded
5- Laterally unstable
6- Vertically and laterally unstable

108. Evolution comments *(Channel evolution not considering bridge effects; See HEC-20, Figure 1 for geomorphic descriptors)*:

N
-

109. G. Plan View Sketch

- N

point bar (pb)	debris	flow (Q)	stone wall
cut-bank (cb)	rip rap or stone fill	cross-section	other wall
scour hole		ambient channel	

APPENDIX F:

SCOUR COMPUTATIONS

SCOUR COMPUTATIONS

Structure Number: WODSTH00050071 Town: WOODSTOCK
Road Number: TH5 County: WINDSOR
Stream: KEDRON BROOK

Initials SAO Date: 8/8/97 Checked:MAI

Analysis of contraction scour, live-bed or clear water?

Critical Velocity of Bed Material (converted to English units)
Vc=11.21*y1^0.1667*D50^0.33 with Ss=2.65
(Richardson and others, 1995, p. 28, eq. 16)

Approach Section

Characteristic	100 yr	500 yr	other Q
Total discharge, cfs	3400	4400	2500
Main Channel Area, ft2	601	622	441
Left overbank area, ft2	1192	1296	655
Right overbank area, ft2	547	627	91
Top width main channel, ft	41	41	41
Top width L overbank, ft	196	213	102
Top width R overbank, ft	157	157	66
D50 of channel, ft	0.368	0.368	0.368
D50 left overbank, ft	--	--	--
D50 right overbank, ft	--	--	--
y1, average depth, MC, ft	14.7	15.2	10.8
y1, average depth, LOB, ft	6.1	6.1	6.4
y1, average depth, ROB, ft	3.5	4.0	1.4
Total conveyance, approach	229918	253014	117334
Conveyance, main channel	105574	111829	62958
Conveyance, LOB	90363	98631	51346
Conveyance, ROB	33982	42554	3029
Percent discrepancy, conveyance	-0.0004	0.0000	0.0009
Qm, discharge, MC, cfs	1561.2	1944.7	1341.4
Ql, discharge, LOB, cfs	1336.3	1715.2	1094.0
Qr, discharge, ROB, cfs	502.5	740.0	64.5
Vm, mean velocity MC, ft/s	2.6	3.1	3.0
Vl, mean velocity, LOB, ft/s	1.1	1.3	1.7
Vr, mean velocity, ROB, ft/s	0.9	1.2	0.7
Vc-m, crit. velocity, MC, ft/s	12.6	12.6	11.9
Vc-l, crit. velocity, LOB, ft/s	ERR	ERR	ERR
Vc-r, crit. velocity, ROB, ft/s	ERR	ERR	ERR

Results
Live-bed(1) or Clear-Water(0) Contraction Scour?

Main Channel	0	0	0
Left Overbank	N/A	N/A	N/A
Right Overbank	N/A	N/A	N/A

Clear Water Contraction Scour in MAIN CHANNEL

y2 = (Q2^2/(131*Dm^(2/3)*W2^2))^(3/7) Converted to English Units
ys=y2-y_bridge
(Richardson and others, 1995, p. 32, eq. 20, 20a)

Bridge Section	Q100	Q500	Other Q
(Q) total discharge, cfs	3400	4400	2500
(Q) discharge thru bridge, cfs	2658	2755	2500
Main channel conveyance	45218	41389	29295
Total conveyance	45218	41389	29295
Q2, bridge MC discharge,cfs	2658	2755	2500
Main channel area, ft2	228	229	148
Main channel width (normal), ft	16.6	16.6	16.6
Cum. width of piers in MC, ft	0.0	0.0	0.0
W, adjusted width, ft	16.6	16.6	16.6
y_bridge (avg. depth at br.), ft	13.73	13.80	8.92
Dm, median (1.25*D50), ft	0.46	0.46	0.46
y2, depth in contraction,ft	11.98	12.35	11.37
ys, scour depth (y2-ybridge), ft	-1.75	-1.44	**2.45**

Armoring
Dc=[(1.94*V^2)/(5.75*log(12.27*y/D90))^2]/[0.03*(165-62.4)]
Depth to Armoring=3*(1/Pc-1)
(Federal Highway Administration, 1993)

Downstream bridge face property	100-yr	500-yr	Other Q
Q, discharge thru bridge MC, cfs	2658	2755	2500
Main channel area (DS), ft2	154	157	148
Main channel width (normal), ft	16.6	16.6	16.6
Cum. width of piers, ft	0.0	0.0	0.0
Adj. main channel width, ft	16.6	16.6	16.6
D90, ft	0.9761	0.9761	0.9761
D95, ft	1.2857	1.2857	1.2857
Dc, critical grain size, ft	1.3295	1.3632	1.2950
Pc, Decimal percent coarser than Dc	0.043	0.040	0.046
Depth to armoring, ft	N/A	N/A	N/A

Pressure Flow Scour (contraction scour for orifice flow conditions)

Chang pressure flow equation Hb+Ys=Cq*qbr/Vc
Cq=1/Cf*Cc Cf=1.5*Fr^0.43 (<=1) Cc=SQRT[0.10(Hb/(ya-w)-0.56)]+0.79 (<=1)
Umbrell pressure flow equation
(Hb+Ys)/ya=1.1021*[(1-w/ya)*(Va/Vc)]^0.6031
(Richardson and other, 1995, p. 144-146)

	Q100	Q500	OtherQ
Q, total, cfs	3400	4400	2500
Q, thru bridge MC, cfs	2658	2755	2500
Vc, critical velocity, ft/s	12.57	12.64	11.94
Va, velocity MC approach, ft/s	2.60	3.13	3.04
Main channel width (normal), ft	16.6	16.6	16.6
Cum. width of piers in MC, ft	0.0	0.0	0.0
W, adjusted width, ft	16.6	16.6	16.6
qbr, unit discharge, ft2/s	160.1	166.0	150.6
Area of full opening, ft2	228.0	229.0	148.0
Hb, depth of full opening, ft	13.73	13.80	8.92
Fr, Froude number, bridge MC	0.66	0.68	0
Cf, Fr correction factor (<=1.0)	1.00	1.00	0.00
**Area at downstream face, ft2	154	157	N/A
**Hb, depth at downstream face, ft	9.28	9.46	N/A
**Fr, Froude number at DS face	1.00	1.01	ERR
**Cf, for downstream face (<=1.0)	1.00	1.00	N/A
Elevation of Low Steel, ft	497.48	497.48	0
Elevation of Bed, ft	483.75	483.68	-8.92
Elevation of Approach, ft	501.35	501.86	0
Friction loss, approach, ft	0	0.01	0
Elevation of WS immediately US, ft	501.35	501.85	0.00
ya, depth immediately US, ft	17.60	18.17	8.92
Mean elevation of deck, ft	500.42	500.42	0
w, depth of overflow, ft (>=0)	0.93	1.43	0.00
Cc, vert contrac correction (<=1.0)	0.95	0.95	1.00
**Cc, for downstream face (<=1.0)	0.79	0.812686	ERR
Ys, scour w/Chang equation, ft	**-0.36**	**-0.01**	N/A
Ys, scour w/Umbrell equation, ft	-6.48	-5.59	N/A

**=for UNsubmerged orifice flow using estimated downstream bridge face properties.

**Ys, scour w/Chang equation, ft	6.85	6.70	N/A

**Ys, scour w/Umbrell equation, ft	-2.02	-1.25	ERR

In UNsubmerged orifice flow, an adjusted scour depth using the Laursen equation results and the estimated downstream bridge face properties can also be computed (ys=y2-ybridgeDS)

y2, from Laursen's equation, ft	11.98	12.35	11.37
WSEL at downstream face, ft	492.95	493.17	--
Depth at downstream face, ft	9.28	9.46	N/A
Ys, depth of scour (Laursen), ft	2.70	2.90	N/A

Abutment Scour

Froehlich's Abutment Scour
Ys/Y1 = 2.27*K1*K2*(a'/Y1)^0.43*Fr1^0.61+1
(Richardson and others, 1995, p. 48, eq. 28)

	Left Abutment			Right Abutment		
Characteristic	100 yr Q	500 yr Q	Other Q	100 yr Q	500 yr Q	Other Q
(Qt), total discharge, cfs	3400	4400	2500	3400	4400	2500
a', abut.length blocking flow, ft	210.3	226.4	116.1	167.4	167.4	77
Ae, area of blocked flow ft2	1224.3	1336.4	788.3	476.1	565.7	169
Qe, discharge blocked abut.,cfs	--	--	1477	--	--	224.5
(If using Qtotal_overbank to obtain Ve, leave Qe blank and enter Ve and Fr manually)						
Ve, (Qe/Ae), ft/s	1.32	1.56	1.87	1.07	1.38	1.33
ya, depth of f/p flow, ft	5.82	5.90	6.79	2.84	3.38	2.19
--Coeff., K1, for abut. type (1.0, verti.; 0.82, verti. w/ wingwall; 0.55, spillthru)						
K1	0.82	0.82	0.82	0.82	0.82	0.82
--Angle (theta) of embankment (<90 if abut. points DS; >90 if abut. points US)						
theta	45	45	45	135	135	135
K2	0.91	0.91	0.91	1.05	1.05	1.05
Fr, froude number f/p flow	0.090	0.107	0.127	0.094	0.114	0.158
ys, scour depth, ft	**16.48**	**18.23**	**17.89**	**10.45**	**12.82**	**8.65**

HIRE equation (a'/ya > 25)
ys = 4*Fr^0.33*y1*K/0.55
(Richardson and others, 1995, p. 49, eq. 29)

a'(abut length blocked, ft)	210.3	226.4	116.1	167.4	167.4	77
y1 (depth f/p flow, ft)	5.82	5.90	6.79	2.84	3.38	2.19
a'/y1	36.12	38.35	17.10	58.86	49.54	35.08
Skew correction (p. 49, fig. 16)	0.80	0.80	0.80	1.10	1.10	1.10
Froude no. f/p flow	0.09	0.11	0.13	0.09	0.11	0.16
Ys w/ corr. factor K1/0.55:						
vertical	15.30	16.43	ERR	10.43	13.20	9.55
vertical w/ ww's	12.55	13.47	ERR	8.55	10.83	7.83
spill-through	8.42	9.03	ERR	5.73	7.26	5.25

Abutment riprap Sizing

Isbash Relationship
D50=y*K*Fr^2/(Ss-1) and D50=y*K*(Fr^2)^0.14/(Ss-1)
(Richardson and others, 1995, p112, eq. 81,82)

Characteristic	Q100	Q500	Other Q	Q100	Q500	Other Q
Fr, Froude Number	1	1	1	1	1	1
y, depth of flow in bridge, ft	9.28	9.46	8.92	9.28	9.46	8.92
Median Stone Diameter for riprap at:	left abutment			right abutment, ft		
Fr<=0.8 (vertical abut.)	ERR	ERR	ERR	ERR	ERR	ERR
Fr>0.8 (vertical abut.)	**3.88**	**3.96**	**3.73**	**3.88**	**3.96**	**3.73**