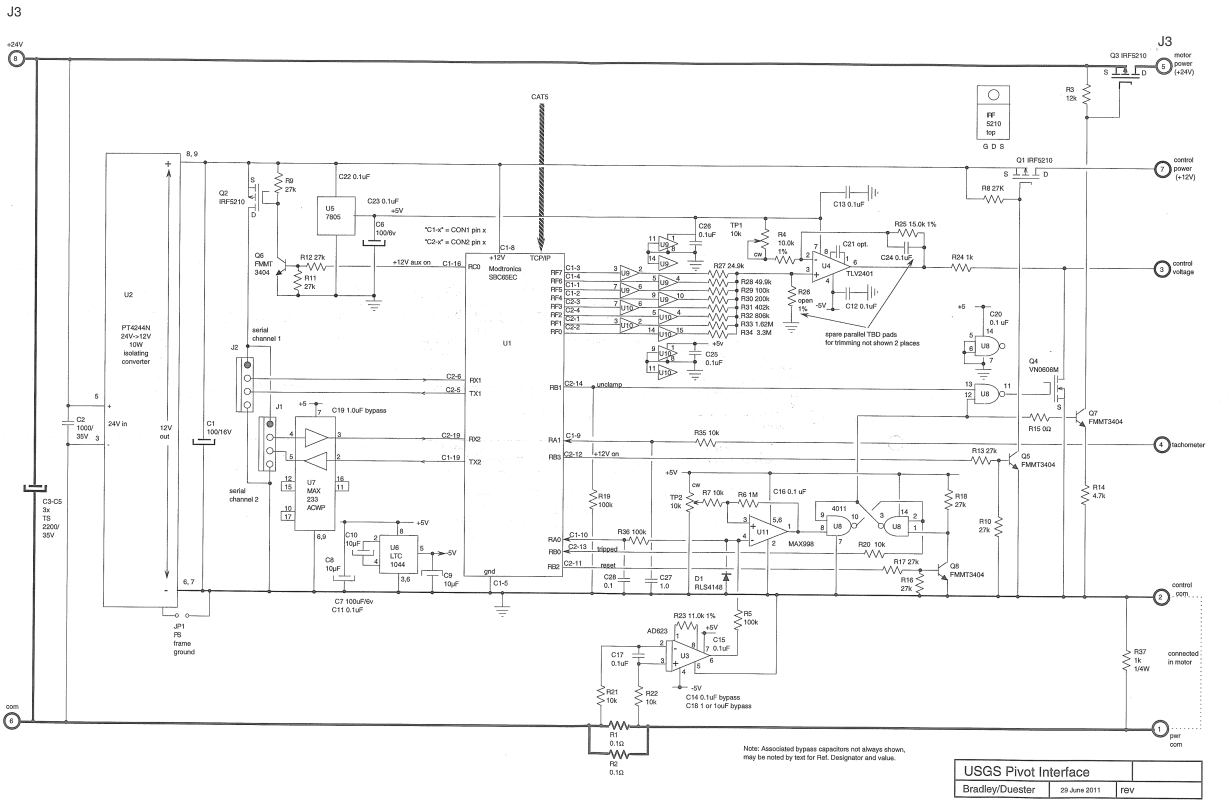

Note: Associated bypass capacitors not always shown, may be noted by text for Ref. Designator and value.

USGS Pivot Interface		
Bradley/Duester	29 June 2011	rev