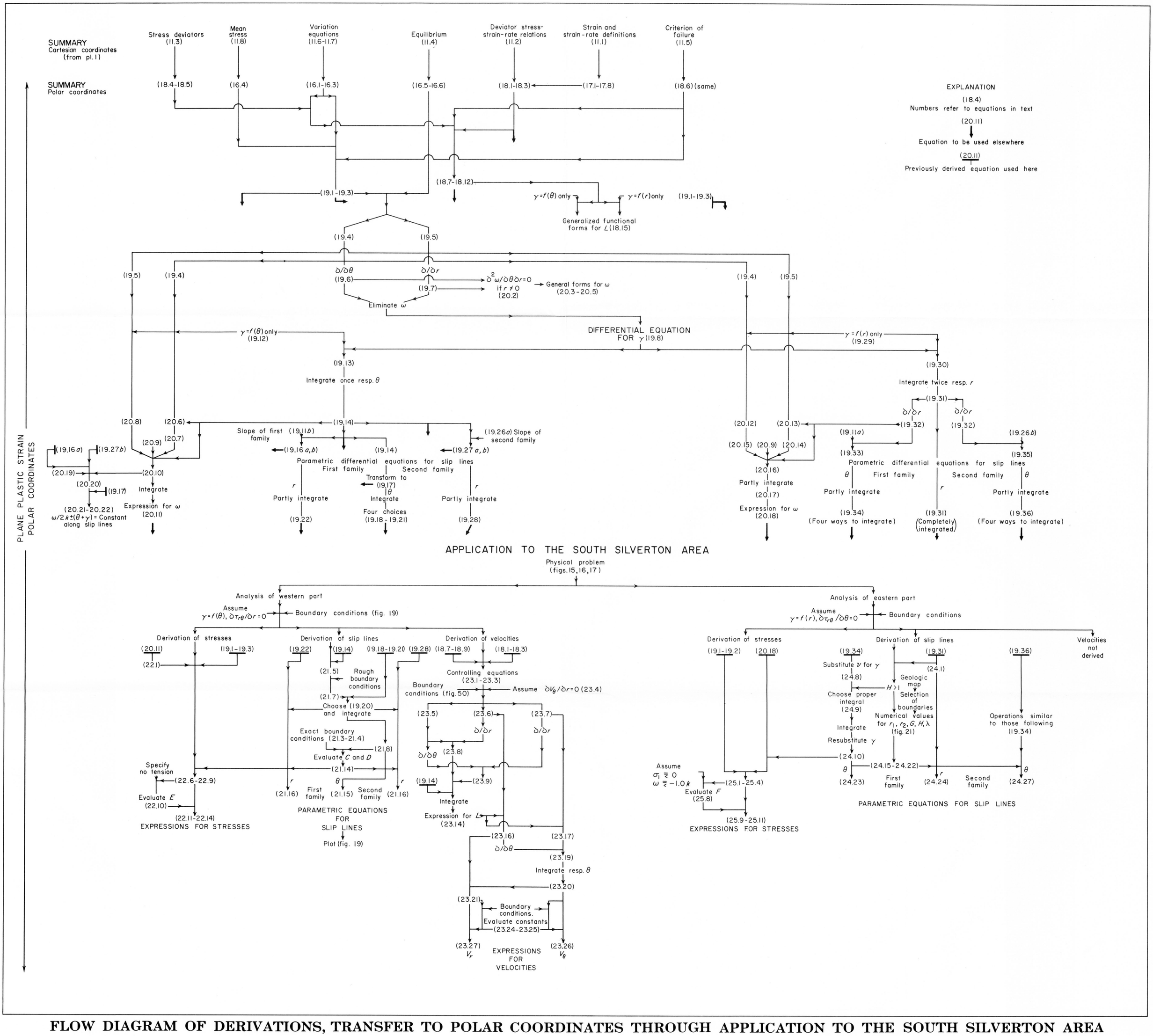

FLOW DIAGRAM OF DERIVATIONS, TRANSFER TO POLAR COORDINATES THROUGH APPLICATION TO THE SOUTH SILVERTON AREA

602793 O - 62 (In pocket) (No. 2)