Foliation

All joints

Joints with dips ≥ 45°

All stations

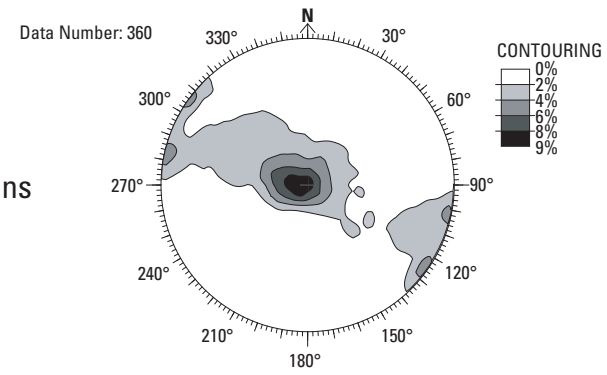

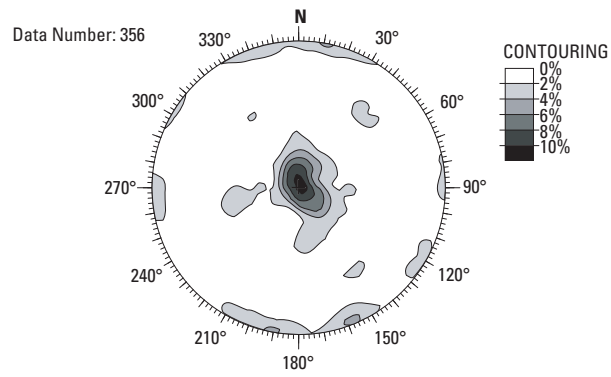

Frequency Gaussians
Total Data: 188

GAUSSIAN PARAMETERS			
% tot. data	Normative Height	Azimuth (deg.)	s.d. (deg.)
9.6	74.0	289.1	6.6
8.5	100.0	57.2	4.3
6.8	61.9	25.7	5.6
6.6	65.6	357.5	5.1
6.4	44.8	308.3	7.2
6.0	69.1	71.5	4.4
5.5	43.3	337.1	6.4
4.9	37.9	274.3	6.5

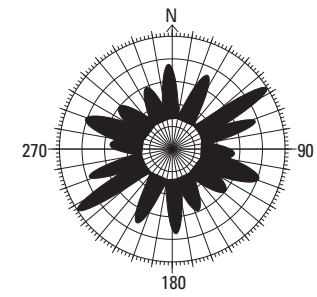

Amphibolite (Zam)

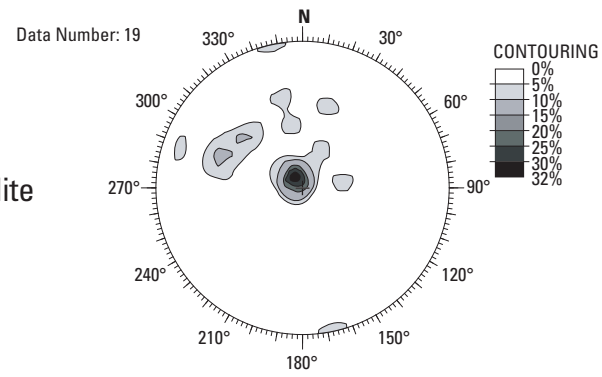

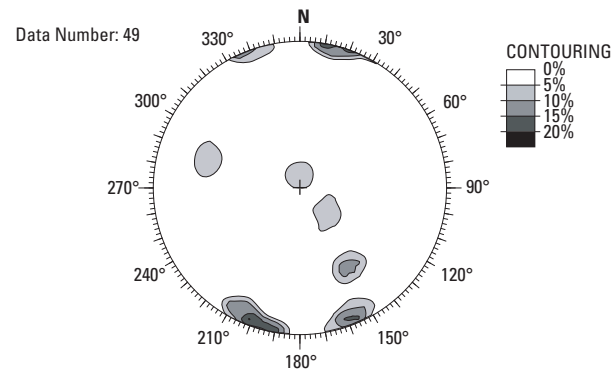

Frequency Gaussians
Total Data: 38

GAUSSIAN PARAMETERS			
% tot. data	Normative Height	Azimuth (deg.)	s.d. (deg.)
23.4	100.0	296.3	4.4
18.7	78.9	284.1	4.5
15.1	83.7	57.7	3.4
12.6	74.6	65.8	3.2
12.2	51.5	18.4	4.5
9.1	58.0	72.8	3.0
5.3	27.4	325.0	3.7

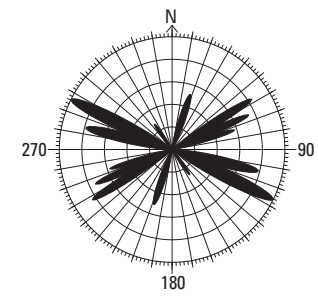

Muscovite-biotite gneiss (Zmbg)

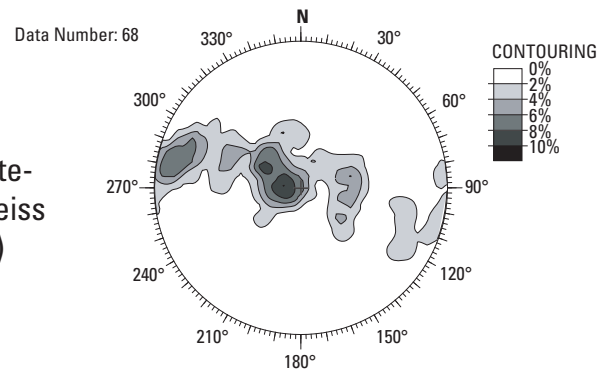

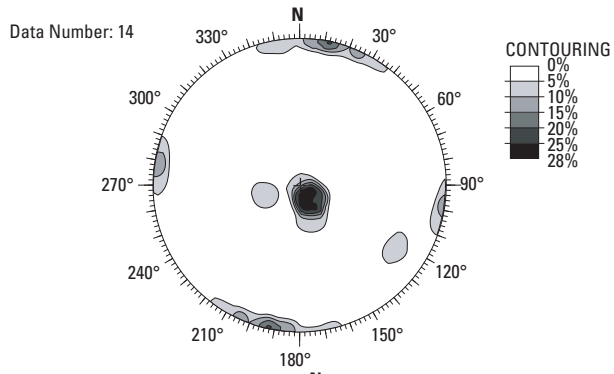

Frequency Gaussians
Total Data: 8

GAUSSIAN PARAMETERS			
% tot. data	Normative Height	Azimuth (deg.)	s.d. (deg.)
30.2	100.0	279.0	4.6
14.4	52.3	299.5	4.2
12.7	53.7	34.0	3.6
12.7	53.3	4.1	3.6
12.4	52.8	11.9	3.6
12.1	53.5	79.7	3.4
6.3	32.1	288.7	3.0

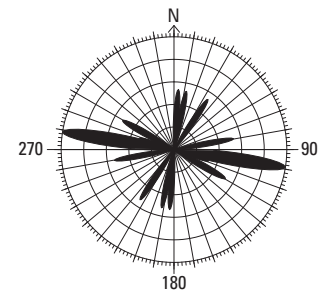

Biotite-muscovite schist (Zbms)

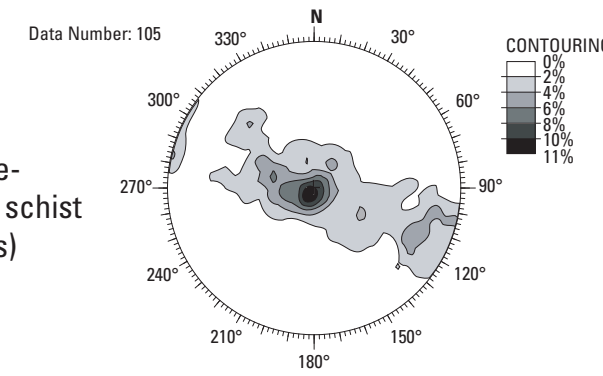

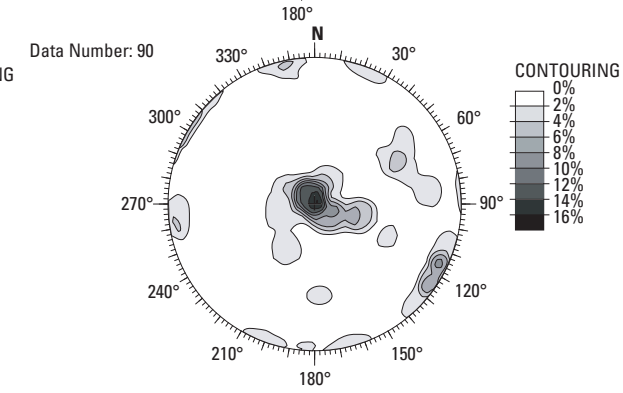

Frequency Gaussians
Total Data: 47

GAUSSIAN PARAMETERS			
% tot. data	Normative Height	Azimuth (deg.)	s.d. (deg.)
19.8	100.0	355.4	4.9
13.3	70.8	29.0	4.6
10.8	60.0	330.6	4.4
10.7	51.1	89.1	5.1
9.3	46.5	20.8	4.9
9.2	47.4	290.3	4.8
8.4	54.6	76.5	3.8
8.2	30.8	44.8	6.5
6.1	23.7	310.6	6.3
4.5	28.6	339.0	3.8

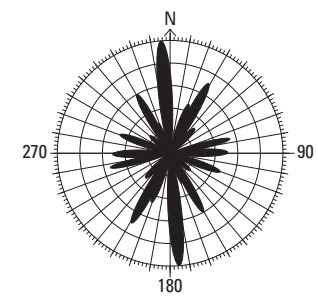

Muscovite-biotite migmatitic gneiss (OZmg)

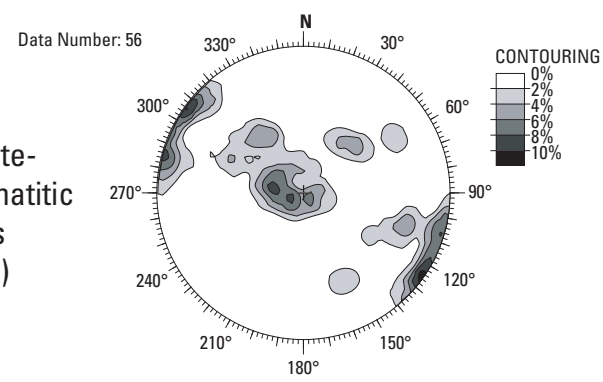

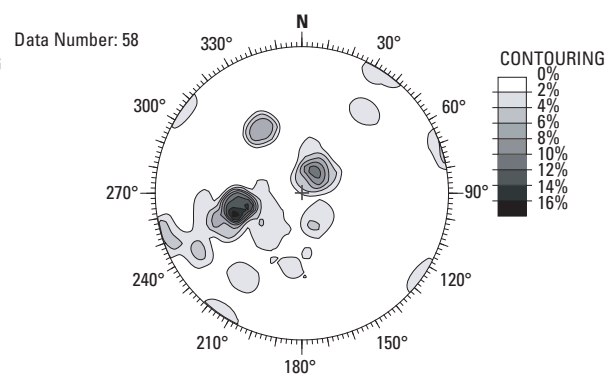

Frequency Gaussians
Total Data: 27

GAUSSIAN PARAMETERS			
% tot. data	Normative Height	Azimuth (deg.)	s.d. (deg.)
36.4	100.0	341.9	5.2
21.7	79.6	306.5	3.9
19.7	20.8	279.2	13.5
8.2	28.0	331.5	4.1
7.5	26.9	36.0	4.0
7.2	26.6	4.3	3.8

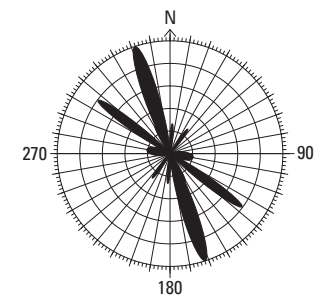

Biotite-muscovite migmatitic schist (OZms)

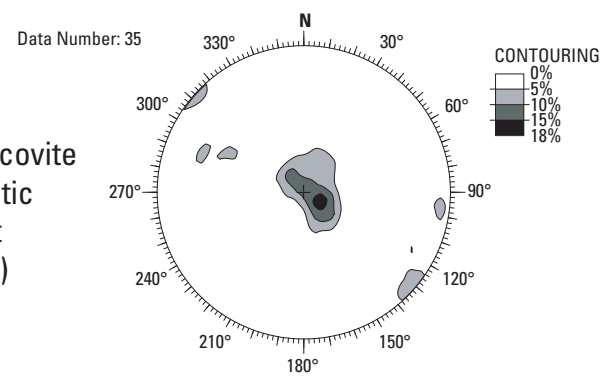

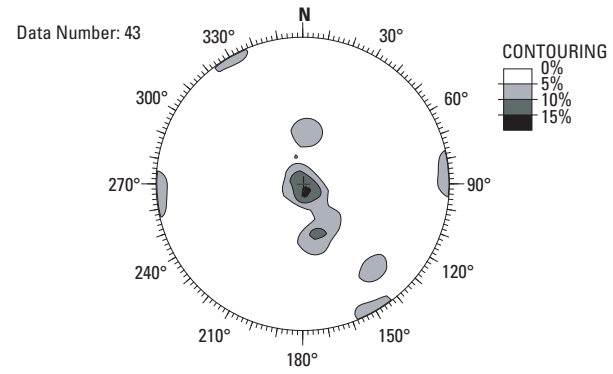

Frequency Gaussians
Total Data: 19

GAUSSIAN PARAMETERS			
% tot. data	Normative Height	Azimuth (deg.)	s.d. (deg.)
25.7	100.0	355.5	5.2
23.3	81.0	60.8	5.8
13.6	68.0	50.1	4.1
10.7	60.1	276.0	3.6
10.7	58.8	312.0	3.7
7.4	26.2	18.6	5.7
5.2	28.1	300.0	3.8
4.3	27.2	339.2	3.2

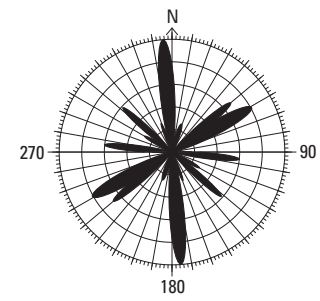

Whiteside trondhjemite (Owt)

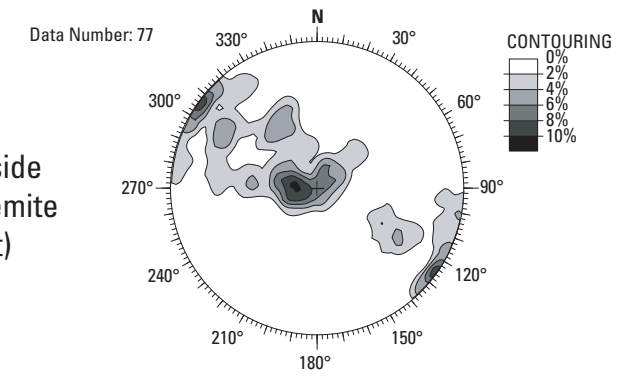

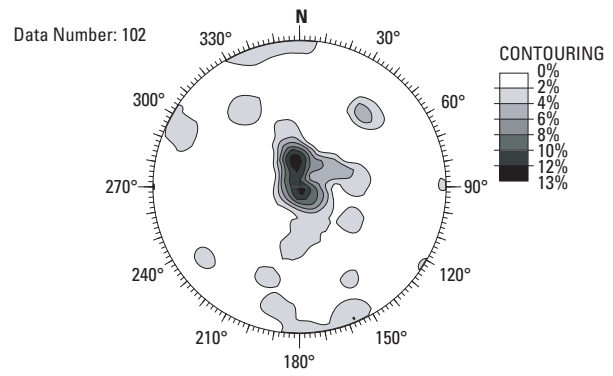

Frequency Gaussians
Total Data: 47

GAUSSIAN PARAMETERS			
% tot. data	Normative Height	Azimuth (deg.)	s.d. (deg.)
21.7	100.0	56.3	5.0
13.8	67.6	314.9	4.7
12.7	71.4	71.0	4.1
11.6	63.8	26.3	4.2
9.7	51.4	280.5	4.3
8.7	49.4	88.3	4.0
7.8	43.9	291.1	4.1
5.1	18.9	322.1	6.2
4.7	28.2	6.0	3.8
3.7	23.0	355.3	3.7

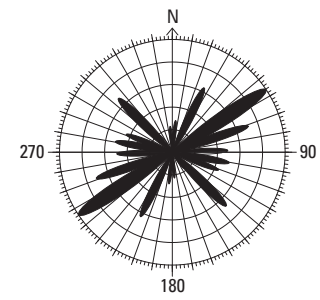

Foliation-parallel parting (all rock units)

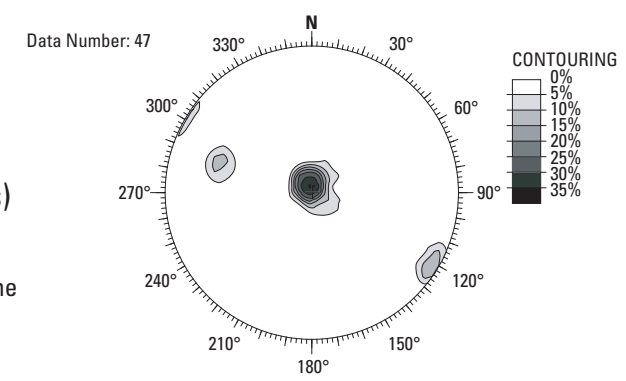

Frequency Gaussians
Total Data: 20

GAUSSIAN PARAMETERS			
% tot. data	Normative Height	Azimuth (deg.)	s.d. (deg.)
42.1	100.0	30.3	4.9
32.9	86.8	18.1	4.4
10.5	31.9	338.2	3.8
9.7	25.9	353.2	4.3

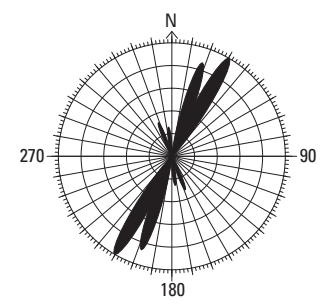

Figure 11. Bedrock structural data from the headwaters region of the Cullasaja River, organized by map unit.