Joe N. Robles
(Rec'd 2-25-74)

(Some Reports Missing Pages 353-368)

1972

Water Resources Data for California

Part 1. Surface Water Records

Volume 1: Colorado River Basin, Southern Great Basin, and Pacific Slope Basins excluding Central Valley.

UNITED STATES
DEPARTMENT OF THE INTERIOR
GEOLOGICAL SURVEY

Prepared in cooperation with the California Department of Water Resources and with other agencies

1972

Water Resources Data for California

Part 1. Surface Water Records

Volume 1: Colorado River Basin, Southern Great Basin, and Pacific Slope Basins excluding Central Valley

UNITED STATES
DEPARTMENT OF THE INTERIOR
GEOLOGICAL SURVEY

Prepared in cooperation with the California Department of Water Resources and with other agencies

Water-resources records, 1972, for California are in the following reports of the U.S. Geological Survey:

1. Water Resources Data for California
   Part 1: Surface Water Records
   Volume 1: Colorado River Basin, Southern Great Basin, and Pacific Slope Basins excluding Central Valley

2. Water Resources Data for California
   Part 1: Surface Water Records
   Volume 2: Northern Great Basin and Central Valley

3. Water Resources Data for California
   Part 2: Water Quality Records

Copies of these reports may be obtained from District Chief,
Water Resources Division
U.S. Geological Survey
855 Oak Grove Avenue
Menlo Park, California 94025

Prepared in cooperation with

California Department of Water Resources
Berrenda Mesa Water District
Alameda County Flood Control and Water Conservation District
Alameda County Water District
Antelope Valley-East Kern Water Agency
Casitas Municipal Water District
Coachella Valley County Water District
Contra Costa County Flood Control and Water Conservation District
Desert Water Agency
East Bay Municipal Utility District
Georgetown Divide Public Utility District
Imperial Irrigation District
Madera Irrigation District
Montecito County Water District
Monterey County Flood Control and Water Conservation District
Napa County Flood Control and Water Conservation District
Orange County Flood Control District
Orange County Water District
Paradise Irrigation District
Riverside County Flood Control and Water Conservation District
Sacramento County Department of Public Works, Water Resources Division
San Benito County Water Conservation and Flood Control District
San Bernardino Valley Municipal Water District
San Diego (county) Department of Sanitation and Flood Control
San Diego (city) Water Utilities
San Francisco, City and County Water Department
San Luis Obispo County Flood Control and Water Conservation District
San Mateo County
San Rafael, City of, Department of Public Works
Santa Barbara City Water Department
Santa Barbara County Flood Control and Water Conservation District
Santa Barbara County Water Agency
Santa Clara County Flood Control and Water District
Santa Cruz, City Water Department
Santa Cruz County Flood Control and Water Conservation District
Santa Maria Valley Water Conservation District
Santa Ynez River Water Conservation District
Siskiyou County Flood Control and Water Conservation District
Tehachapi-Cummings County Water District
Terra Bella Irrigation District
Tulare County Flood Control District
Turlock Irrigation District
United Water Conservation District
University of California (Berkeley)
Ventura County Department of Public Works
Western Municipal Water District
Woodbridge Irrigation District
Yolo County Flood Control and Water Conservation District
Corps of Engineers, U.S. Army
Bureau of Reclamation, U.S. Department of the Interior
National Park Service, U.S. Department of the Interior
Forest Service, U.S. Department of Agriculture
Soil Conservation Service, U.S. Department of Agriculture
U.S. Atomic Energy Commission

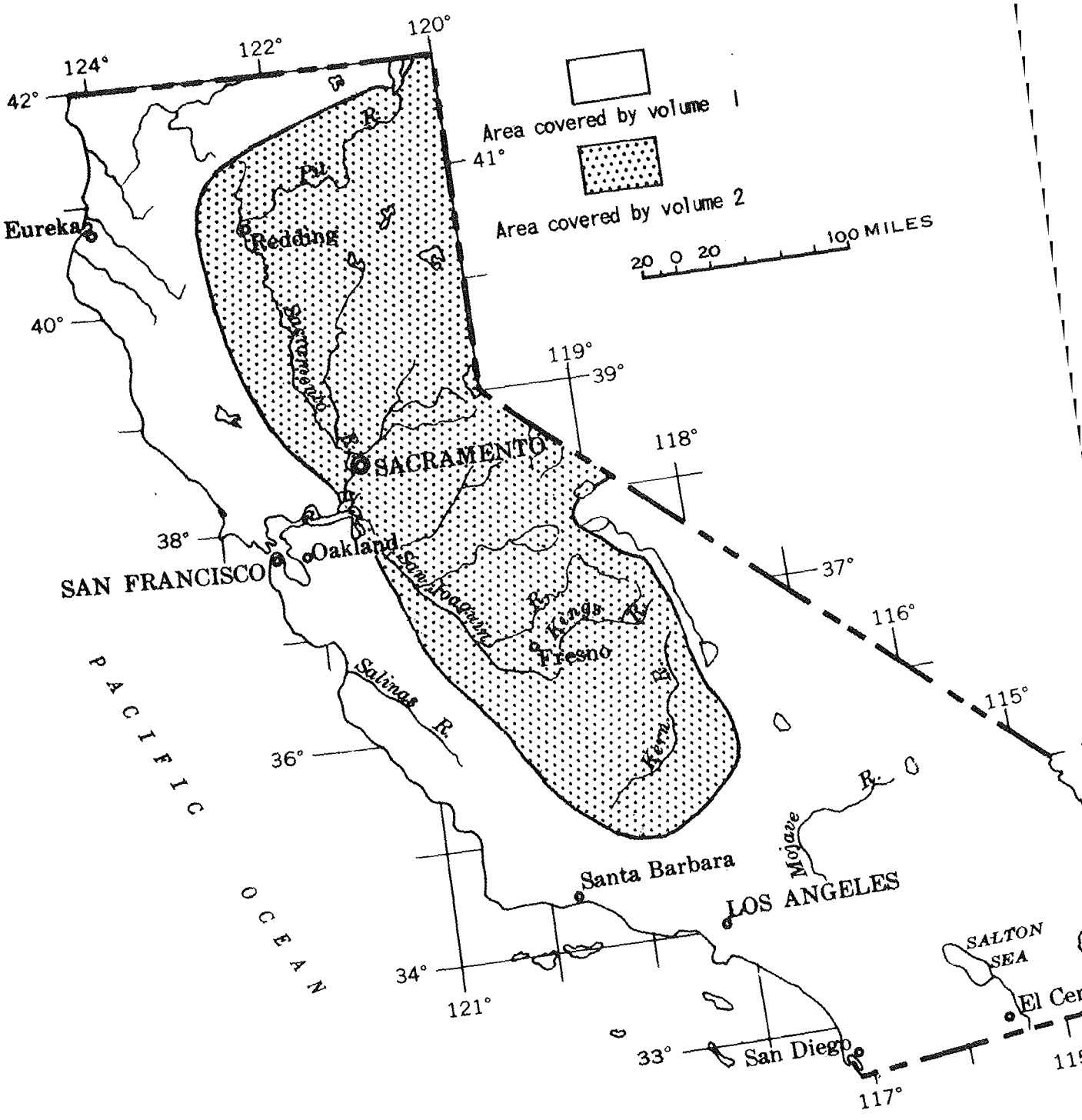
Area covered by volume 1
Area covered by volume 2
20 0 20 100 MILES
124°
122°
120°
42°
41°
40°
39°
38°
37°
36°
34°
33°
119°
118°
116°
115°
121°
117°
Eureka
Redding
Sacramento
SACRAMENTO
Oakland
SAN FRANCISCO
San Joaquin R.
Kings R.
Fresno
Kern R.
Salinas R.
Mojave R.
Santa Barbara
LOS ANGELES
SALTON SEA
El Cen
San Diego
PACIFIC OCEAN

CONTENTS

	Page
List of gaging stations, in downstream order, for which records are published	VI
Introduction	1
Cooperation	2
Definition of terms	3
Special networks and programs	4
Downstream order and station numbers	4
Explanation surface-water data	5
Collection and computation of data	5
Accuracy of data	9
Publications	9
Other data available	10
Hydrologic conditions	10
Selected references	11
Gaging-station records	13
Discharge at partial-record stations and miscellaneous sites	502
Low-flow partial-record stations	502
Crest-stage partial-record stations	503
Discharge measurements at miscellaneous sites	506
Index	509

ILLUSTRATIONS

		Page
Figure 1.	Map showing runoff for the 1972 water year	12
2.	Schematic diagram showing gaging stations on streams, diversions, and return flows between Imperial Dam and the southerly international boundary	38
3-4.	Schematic diagrams showing diversions and storage in:	
	3. Santa Ana River basin	138
	4. San Gabriel and Los Angeles river basins	193

Page

COLORADO RIVER BASIN
COLORADO RIVER:
Colorado River below Davis Dam, Ariz.-Nev..... 13
Colorado River at Needles..... 14
Colorado River near Topock, Ariz..... 15
LAKE HAVASU:
DIVERSION FROM LAKE HAVASU
Colorado River aqueduct near Parker Dam, Ariz.-Calif..... 17
Lake Havasu near Parker Dam, Ariz.-Calif..... 18
Colorado River below Parker Dam, Ariz.-Calif..... 20
TRIBUTARIES AND DIVERSIONS BETWEEN PARKER DAM AND PALO VERDE DAM
Palo Verde Canal near Blythe..... 21
Colorado River at Palo Verde Dam, Ariz.-Calif..... 22
Colorado River above Imperial Dam, Ariz.-Calif..... 23
Colorado River below Imperial Dam, Ariz.-Calif..... 24
Colorado River below Laguna Dam, Ariz.-Calif..... 25
Colorado River below Yuma Main Canal wasteway, at Yuma, Ariz..... 26
Colorado River at northerly international boundary, above Morelos Dam, near Andrade..... 27
DIVERSIONS AND RETURN FLOWS AT AND BELOW IMPERIAL DAM
Gila Gravity Main Canal at Imperial Dam, Ariz.-Calif..... 28
All-American Canal near Imperial Dam, Ariz.-Calif..... 29
Pilot Knob powerplant and wasteway near Pilot Knob..... 30
All-American Canal below Pilot Knob wasteway..... 31
Return surface flows below Imperial Dam, Ariz.-Calif..... 32
THE GREAT BASIN
PANAMINT VALLEY
Wildrose Creek near Wildrose Station..... 39
Darwin Creek near Darwin..... 41
DEATH VALLEY
Amargosa River at Tecopa..... 42
IVANPAH VALLEY
China Spring Creek near Mountain Pass..... 43
BRISTOL LAKE BASIN
Caruthers Creek near Ivanpah..... 44
SALTON SEA BASIN
Salton Sea near Westmorland..... 45
Inflow to Salton Sea..... 45
Salt Creek near Mecca..... 46
Alamo River near Niland..... 47
New River near Westmorland..... 48
San Felipe Creek near Julian..... 49
Coyote Creek near Borrego Springs..... 50
Borrego Palm Creek near Borrego Springs..... 51
Carrizo Creek:
Vallecito Creek near Julian..... 52
San Felipe Creek near Westmorland..... 53
Whitewater River at White Water..... 54
San Gorgonio River near White Water..... 55
Snow Creek near White Water..... 56
Mission Creek near Desert Hot Springs..... 57
Morongo Wash:
Tahquitz Creek near Palm Springs..... 58
Palm Canyon Creek:
Palm Canyon Creek tributary near Anza..... 59
Palm Canyon Creek near Palm Springs..... 59
Andreas Creek near Palm Springs..... 60
Deep Creek near Palm Desert..... 61
Whitewater River at Indio..... 62
Whitewater River near Mecca..... 63
Box Canyon Wash:
Cottonwood Wash near Cottonwood Spring..... 64
Wasteway No. 1 near Mecca..... 65
MOJAVE RIVER BASIN
Deep Creek (head of Mojave River) near Hesperia..... 66

Page

THE GREAT BASIN--Continued
MOJAVE RIVER BASIN--Continued
Mojave River below Forks Reservoir, near Hesperia..... 67
Mojave River at lower narrows, near Victorville..... 68
Mojave River near Hodge..... 69
Mojave River at Barstow..... 70
Boom Creek near Barstow..... 71
Mojave River at Afton..... 72
ANTELOPE VALLEY
Big Rock Creek near Valyermo..... 73
Little Rock Creek near Little Rock..... 74
Spencer Canyon Creek near Fairmont..... 75
Cottonwood Creek near Rosamond..... 76
Oak Creek near Mojave..... 77
KOEHN LAKE BASIN
Goler Gulch near Randsburg..... 78
Cache Creek near Mojave..... 79
Pine Tree Creek near Mojave..... 80
Cottonwood Creek near Cantil..... 81
OWENS LAKE BASIN
Owens River:
Convict Creek near Mammoth Lakes..... 82
Rock Creek at Little Round Valley, near Bishop..... 83
Pine Creek at diversion box, near Bishop..... 84
Silver Canyon Creek near Laws..... 85
Bishop Creek below powerplant No. 6, near Bishop..... 86
Big Pine Creek near Big Pine..... 87
Owens River near Big Pine..... 89
Independence Creek below Pinyon Creek, near Independence..... 90
Mazourka Creek near Independence..... 91
Lone Pine Creek:
Inyo Creek near Lone Pine..... 92
Owens River at Keeler Bridge, near Lone Pine..... 93
Cottonwood Creek near Olancha..... 94
MONO LAKE BASIN
Mono Lake near Mono Lake..... 96
Mill Creek below Lundy Lake, near Mono Lake..... 97
Rush Creek below Agnew Lake, near June Lake..... 98
Rush Creek above Grant Lake, near June Lake..... 99
Lee Vining Creek near Lee Vining..... 100
PACIFIC SLOPE BASINS IN CALIFORNIA
TIJUANA RIVER BASIN
Cottonwood Creek (head of Tijuana River):
Wilson Creek:
Wilson Creek tributary near Dulzura..... 101
Cottonwood Creek above Tecate Creek, near Dulzura..... 102
Tecate Creek:
Campo Creek near Campo..... 103
Tijuana River near Dulzura..... 104
Rodriguez Reservoir at Rodriguez Dam, Baja California, Mex..... 105
Tijuana River near Nestor..... 106
OTAY RIVER BASIN
Jamul Creek (head of Otay River) near Jamul..... 107
SWEETWATER RIVER BASIN
Sweetwater River near Descanso..... 108
SAN DIEGO RIVER BASIN
San Diego River near Santee..... 110
LOS PENASQUITOS CREEK BASIN
Poway Creek (head of Los Penasquitos Creek):
Pomerado Creek at Poway Road, near Poway..... 111
Los Penasquitos Creek below Poway Creek, near Poway..... 112
Los Penasquitos Creek near Poway..... 113
SAN DIEGUITO RIVER BASIN
Santa Ysabel Creek (head of San Dieguito River) near Ramona..... 114
Santa Ysabel Creek near San Pasqual..... 115

Page

PACIFIC SLOPE BASINS IN CALIFORNIA--Continued
SAN DIEGUITO RIVER BASIN--Continued
Guejito Creek near San Pasqual..... 116
Santa Maria Creek near Ramona..... 117
SAN LUIS REY RIVER BASIN
San Luis Rey River:
Agua Caliente Creek near Warner Springs..... 118
West Fork San Luis Rey River near Warner Springs..... 119
Pauma Creek near Pauma Valley..... 120
San Luis Rey River tributary near Pala..... 122
San Luis Rey River at Monserate Narrows, near Pala..... 122
Keys Creek:
Keys Creek tributary at Valley Center..... 123
San Luis Rey River near Bonsall..... 124
San Luis Rey River at Oceanside..... 125
SANTA MARGARITA RIVER BASIN
Temecula Creek (head of Santa Margarita River) near Aguanga..... 126
Temecula Creek at Vail Dam..... 127
Murrieta Creek at Temecula..... 128
Santa Margarita River near Temecula..... 129
Santa Margarita River near Fallbrook..... 130
Santa Margarita River at Ysidora..... 131
LAS FLORES CREEK BASIN
Las Flores Creek near Oceanside..... 132
SAN JUAN CREEK BASIN
San Juan Creek at San Juan Capistrano..... 133
Arroyo Trabuco near San Juan Capistrano..... 134
Oso Creek at Crown Valley Parkway, near Mission Viejo..... 135
ALISO CREEK BASIN
Aliso Creek at El Toro..... 136
PETERS CANYON WASH BASIN
Peters Canyon Wash:
San Diego Creek near Irvine..... 137
SANTA ANA RIVER BASIN
Santa Ana River:
Bear Creek:
Big Bear Lake near Big Bear Lake..... 139
Santa Ana River near Mentone..... 140
Santa Ana River spreading diversion near Mentone..... 142
Mill Creek near Yucaipa..... 143
Plunge Creek near East Highlands..... 145
Warm Creek:
City Creek near Highland..... 147
San Timoteo Creek:
Little San Gorgonio Creek near Beaumont..... 149
San Timoteo Creek near Loma Linda..... 150
Warm Creek:
East Twin Creek near Arrowhead Springs..... 151
Waterman Canyon Creek near Arrowhead Springs..... 152
Warm Creek Floodway at San Bernardino..... 153
Santa Ana River at E Street, near San Bernardino..... 154
Warm Creek near San Bernardino..... 155
Meeks and Daley Canal near Colton..... 156
Lytle Creek near Fontana..... 157
Cajon Creek:
Lone Pine Creek near Keenbrook..... 159
Cajon Creek below Lone Pine Creek, near Keenbrook..... 160
Devil Canyon Creek near San Bernardino..... 161
Lytle Creek at Colton..... 162
Santa Ana River at Mission Boulevard, at Riverside..... 163
Santa Ana River at MWD Crossing, near Arlington..... 164
Riverside Narrows Water Quality Control Plant at Riverside Narrows, near Arlington..... 165
Santa Ana River at Riverside Narrows, near Arlington..... 166
Day Creek near Etiwanda..... 167

Page

PACIFIC SLOPE BASINS IN CALIFORNIA--Continued
SANTA ANA RIVER BASIN--Continued
Santa Ana River at Prado Park, near Corona..... 168
San Jacinto River:
Lake Hemet near Idyllwild..... 169
San Jacinto River near San Jacinto..... 170
Bautista Creek near Valle Vista..... 172
Perris Valley Storm Drain at Nuevo Road, near Perris..... 173
San Jacinto River at Railroad Canyon weir, near Elsinore..... 174
Salt Creek at Railroad Canyon Reservoir, near Elsinore..... 176
San Jacinto River near Elsinore..... 179
Temescal Creek near Corona..... 180
Temescal Creek at Corona..... 181
Chino Creek:
San Antonio Creek near Claremont..... 182
San Antonio Creek below San Antonio Dam..... 184
Chino Creek at Schaeffer Avenue, near Chino..... 185
Cucamonga Creek near Upland..... 186
Cucamonga Creek near Mira Loma..... 187
Santa Ana River below Prado Dam..... 188
Carbon Creek below Carbon Canyon Dam..... 189
Santiago Creek at Modjeska..... 190
Santiago Creek at Santa Ana..... 191
Santa Ana River at Santa Ana..... 192
SAN GABRIEL RIVER BASIN
East Fork San Gabriel River (head of San Gabriel River) near Camp Bonita.. 194
West Fork San Gabriel River at Camp Rincon..... 195
Fish Creek near Duarte..... 196
San Gabriel River below Santa Fe Dam, near Baldwin Park..... 197
Walnut Creek:
Dalton Creek:
San Dimas Creek below San Dimas Dam..... 198
San Jose Creek near El Monte..... 199
San Gabriel River above Whittier Narrows Dam..... 200
San Gabriel River at Pico..... 201
San Gabriel River at Spring Street, near Los Alamitos..... 202
Coyote Creek:
Brea Creek below Brea Dam, near Fullerton..... 203
Fullerton Creek below Fullerton Dam, near Brea..... 204
Fullerton Creek at Richman Avenue, near Fullerton..... 205
Coyote Creek at Los Alamitos..... 206
LOS ANGELES RIVER BASIN
Los Angeles River at Sepulveda Dam..... 207
Pacoima Creek near San Fernando..... 208
Tujunga Creek:
Mill Creek:
North Fork Mill Creek near La Canada..... 209
Tujunga Creek near Sunland..... 210
Little Tujunga Creek near San Fernando..... 211
Tujunga Creek below Hansen Dam..... 212
Los Angeles River at Los Angeles..... 213
Arroyo Seco near Pasadena..... 214
Los Angeles River near Downey..... 215
Rio Hondo above Whittier Narrows Dam..... 216
Rio Hondo near Montebello..... 217
Mission Creek near Montebello..... 218
Rio Hondo below Whittier Narrows Dam..... 219
Rio Hondo near Downey..... 220
Los Angeles River at Long Beach..... 221
BALLONA CREEK BASIN
Ballona Creek near Culver City..... 222
TOPANGA CREEK BASIN
Topanga Creek near Topanga Beach..... 223
MALIBU CREEK BASIN
Malibu Creek at Crater Camp, near Calabasas..... 224

Page

PACIFIC SLOPE BASINS IN CALIFORNIA--Continued
CALLEGUAS CREEK BASIN
Calleguas Creek:
Arroyo Simi near Simi..... 225
Calleguas Creek at Camarillo State Hospital..... 226
SANTA CLARA RIVER BASIN
Santa Clara River above railroad station, near Lang..... 227
Bouquet Creek near Saugus..... 228
Castaic Creek near Saugus..... 229
Santa Clara River at Los Angeles-Ventura County line..... 230
Piru Creek below Thorn Meadows, near Stauffer..... 231
Lockwood Creek:
Middle Fork Lockwood Creek near Stauffer..... 232
Lockwood Creek at Gorge, near Stauffer..... 233
Piru Creek above Lake Piru..... 234
Lake Piru near Piru..... 235
Piru Creek near Piru..... 236
Hopper Creek near Piru..... 237
Sespe Creek near Wheeler Springs..... 238
Sespe Creek near Fillmore..... 239
Santa Paula Creek near Santa Paula..... 241
Saticoy diversion near Saticoy..... 242
Santa Clara River at Montalvo..... 243
VENTURA RIVER BASIN
Matilija Creek (head of Ventura River):
Matilija Reservoir at Matilija Hot Springs..... 244
Matilija Creek at Matilija Hot Springs..... 245
North Fork Matilija Creek at Matilija Hot Springs..... 246
Ventura River near Meiners Oaks..... 247
San Antonio Creek at Casitas Springs..... 248
Coyote Creek near Oak View..... 249
Santa Ana Creek near Oak View..... 250
Coyote Creek near Ventura..... 251
Ventura River near Ventura..... 252
CARPINTERIA CREEK BASIN
Carpinteria Creek near Carpinteria..... 254
FRANKLIN CREEK BASIN
Franklin Creek at Carpinteria..... 255
SYCAMORE CREEK BASIN
Sycamore Creek at Santa Barbara..... 256
MISSION CREEK BASIN
Mission Creek near Mission Street, at Santa Barbara..... 257
Victoria Street drain at outlet, near Santa Barbara..... 258
ARROYO BURRO CREEK BASIN
Arroyo Burro Creek at Santa Barbara..... 259
ATASCADERO CREEK BASIN
Atascadero Creek at Puente Road, near Goleta..... 260
Maria Ygnacio Creek at University Drive, near Goleta..... 261
Atascadero Creek near Goleta..... 262
SAN JOSE CREEK BASIN
San Jose Creek near Goleta..... 263
San Jose Creek at Goleta..... 264
SAN PEDRO CREEK BASIN
San Pedro Creek at Goleta..... 265
CARNEROS CREEK BASIN
Carneros Creek:
Tecolotito Creek near Goleta..... 266
GAVIOTA CREEK BASIN
Gaviota Creek near Gaviota..... 267
JALAMA CREEK BASIN
Jalama Creek near Lompoc..... 268
SANTA YNEZ RIVER BASIN
Santa Ynez River at Jameson Lake, near Montecito..... 269
Santa Ynez River above Gibraltar Dam, near Santa Barbara..... 271
Santa Ynez River below Gibraltar Dam, near Santa Barbara..... 272

Page

PACIFIC SLOPE BASINS IN CALIFORNIA--Continued
SANTA YNEZ RIVER BASIN--Continued
Santa Ynez River below Los Laureles Canyon, near Santa Ynez..... 273
Santa Cruz Creek near Santa Ynez..... 274
Lake Cachuma near Santa Ynez..... 275
Santa Ynez River near Santa Ynez..... 276
Alamo Pintado Creek near Solvang..... 277
Alisal Reservoir near Solvang..... 278
Alisal Creek near Solvang..... 279
Santa Ynez River at Solvang..... 280
Zaca Creek near Buellton..... 281
Santa Ynez River near Buellton..... 282
Santa Ynez River at Cooper's Reef, near Lompoc..... 283
Salsipuedes Creek near Lompoc..... 284
Santa Ynez River at narrows, near Lompoc..... 285
Purisima Creek near Lompoc..... 286
Santa Ynez River at 13th Street, near Lompoc..... 287
Miguelito Creek at Lompoc..... 288
Santa Ynez River at Pine Canyon, near Lompoc..... 289
Rodeo-San Pasqual Creek near Lompoc..... 290
SAN ANTONIO CREEK BASIN
San Antonio Creek at Los Alamos..... 291
San Antonio Creek near Casmalia..... 292
SANTA MARIA RIVER BASIN
Cuyama River (head of Santa Maria River):
Aliso Canyon Creek near New Cuyama..... 293
Cuyama River below Buckhorn Canyon, near Santa Maria..... 294
Alamo Creek near Nipomo..... 295
Huasna River near Arroyo Grande..... 296
Cuyama River below Twitchell Dam..... 297
Sisquoc River near Sisquoc..... 298
La Brea Creek near Sisquoc..... 299
Foxen Creek near Sisquoc..... 300
Tepusquet Creek near Sisquoc..... 301
Sisquoc River near Garey..... 302
Bradley ditch near Donovan Road, at Santa Maria..... 303
Santa Maria River at Guadalupe..... 304
ARROYO GRANDE BASIN
Arroyo Grande above Phoenix Creek, near Arroyo Grande..... 305
Wittenburg Creek near Arroyo Grande..... 306
Lopez Creek near Arroyo Grande..... 307
Tar Spring Creek near Arroyo Grande..... 308
Arroyo Grande at Arroyo Grande..... 309
Los Berros Creek near Nipomo..... 310
MORRO CREEK BASIN
Morro Creek at Morro Bay..... 311
TORO CREEK BASIN
Toro Creek near Morro Bay..... 312
SANTA ROSA CREEK BASIN
Santa Rosa Creek near Cambria..... 313
ARROYO DE LA CRUZ BASIN
Arroyo de la Cruz near San Simeon..... 314
BIG SUR RIVER BASIN
Big Sur River near Big Sur..... 315
CARMEL RIVER BASIN
Carmel River at Robles del Rio..... 316
Carmel River near Carmel..... 317
Arroyo del Rey at Del Rey Oaks..... 318
SALINAS RIVER BASIN
Salinas River near Pozo..... 319
Toro Creek near Pozo..... 320
Salsipuedes Creek near Pozo..... 321
Santa Margarita Lake near Pozo..... 322
Salinas River above Pilitas Creek, near Santa Margarita..... 323
Jack Creek near Templeton..... 324

Page

PACIFIC SLOPE BASINS IN CALIFORNIA--Continued
SALINAS RIVER BASIN--Continued
Santa Rita Creek:
Santa Rita Creek tributary near Templeton..... 325
Santa Rita Creek near Templeton..... 326
Salinas River at Paso Robles..... 327
Huerhuero Creek near Creston..... 328
Estrella River:
Cholame Creek near Shandon..... 329
Estrella River near Estrella..... 330
Nacimiento River below Sapaque Creek, near Bryson..... 331
Reservoirs in Salinas River basin..... 332
Nacimiento River below Nacimiento Dam, near Bradley..... 333
San Antonio River near Lockwood..... 334
Salinas River near Bradley..... 335
San Lorenzo Creek below Bitterwater Creek, near King City..... 336
Salinas River at Soledad..... 337
Arroyo Seco near Greenfield..... 338
Arroyo Seco near Soledad..... 339
Salinas River near Spreckels..... 340
El Toro Creek near Spreckels..... 341
Tembladero Slough:
Reclamation ditch:
Alisal Creek near Salinas..... 342
Gabilan Creek near Salinas..... 343
Reclamation ditch near Salinas..... 344
PAJARO RIVER BASIN
Pajaro River:
Cedar Creek near Bell Station..... 345
Pacheco Creek near Dunneville..... 346
Llagas Creek above Chesbro Reservoir, near Morgan Hill..... 347
Reservoirs in Pajaro River basin..... 348
Pajaro River near Gilroy..... 349
Carnadero Creek:
Uvas Creek above Uvas Reservoir, near Morgan Hill..... 350
Bodfish Creek near Gilroy..... 351
Uvas Creek near Gilroy..... 352
San Benito River near Willow Creek School..... 353
Tres Pinos Creek near Tres Pinos..... 354
San Benito River near Hollister..... 355
San Benito River at State Highway 156, near Hollister..... 356
Pescadero Creek near Chittenden..... 357
Pajaro River at Chittenden..... 358
Corralitos Creek near Corralitos..... 359
Corralitos Creek at Freedom..... 360
Pajaro River at Watsonville..... 361
APTOS CREEK BASIN
Aptos Creek near Aptos..... 362
Aptos Creek at Aptos..... 363
SOQUEL CREEK BASIN
Soquel Creek:
West Branch Soquel Creek near Soquel..... 364
Soquel Creek near Soquel..... 365
Soquel Creek at Soquel..... 366
SAN LORENZO RIVER BASIN
San Lorenzo River near Boulder Creek..... 367
Zayante Creek at Zayante..... 368
San Lorenzo River at Big Trees..... 369
MAJORS CREEK BASIN
Majors Creek near Santa Cruz..... 370
LAGUNA CREEK BASIN
Laguna Creek near Davenport..... 371
SAN VINCENTE CREEK BASIN
San Vincente Creek near Davenport..... 372

Page

PACIFIC SLOPE BASINS IN CALIFORNIA--Continued
SCOTT CREEK BASIN
Scott Creek above Little Creek, near Davenport 373
PESCADERO CREEK BASIN
Pescadero Creek near Pescadero 374
Butano Creek near Pescadero 375
SAN GREGORIO CREEK BASIN
San Gregorio Creek at San Gregorio 376
PILARCITOS CREEK BASIN
Pilarcitos Creek at Half Moon Bay 377
COLMA CREEK BASIN
Colma Creek at South San Francisco 378
REDWOOD CREEK BASIN
Redwood Creek at Redwood City 379
SAN FRANCISQUITO CREEK BASIN
San Francisquito Creek at Stanford University 380
MATADERO CREEK BASIN
Matadero Creek at Palo Alto 381
STEVENS CREEK BASIN
Stevens Creek Reservoir near Monte Vista 382
GUADALUPE RIVER BASIN
Reservoirs in Guadalupe River basin 383
Alamitos Creek (head of Guadalupe River) near New Almaden 384
Guadalupe River at San Jose 385
Saratoga Creek at Saratoga 386
COYOTE CREEK BASIN
Coyote Creek near Gilroy 387
Reservoirs in Coyote Creek basin 388
Coyote Creek near Madrone 389
Upper Penitencia Creek at San Jose 390
ALAMEDA CREEK BASIN
Alameda Creek:
Calaveras Creek:
Arroyo Hondo near San Jose 391
Arroyo de la Laguna:
Arroyo Mocho near Livermore 392
Arroyo Las Positas above Livermore 393
Arroyo Mocho near Pleasanton 394
Arroyo Valle above Lang Canyon, near Livermore 395
Arroyo Valle near Livermore 396
Arroyo Valle at Pleasanton 397
Arroyo de la Laguna near Pleasanton 398
Alameda Creek near Niles 399
Dry Creek at Union City 400
Patterson Creek at Union City 401
Alameda Creek at Union City 402
SAN LORENZO CREEK BASIN
San Lorenzo Creek at Hayward 403
Castro Valley Creek at Hayward 404
San Lorenzo Creek at San Lorenzo 405
CASTRO CREEK BASIN
Castro Creek:
Wildcat Creek at Richmond 406
RHEEM CREEK BASIN
Rheem Creek at San Pablo 407
PINOLE CREEK BASIN
Pinole Creek at Pinole 408
ARROYO DEL HAMBRE BASIN
Arroyo del Hambre at Martinez 409
PACHECO CREEK BASIN
Walnut Creek (head of Pacheco Creek):
San Ramon Creek at San Ramon 410
San Ramon Creek at Walnut Creek 411
Walnut Creek at Concord 412

Page

PACIFIC SLOPE BASINS IN CALIFORNIA--Continued
NAPA RIVER BASIN
Napa River near St. Helena..... 413
Conn Creek near Oakville..... 414
Napa River near Napa..... 415
Milliken Creek near Napa..... 416
Redwood Creek (head of Napa Creek) near Napa..... 417
Napa Creek at Napa..... 418
Tulucay Creek at Napa..... 419
SONOMA CREEK BASIN
Sonoma Creek at Agua Caliente..... 420
NOVATO CREEK BASIN
Novato Creek at Novato..... 421
SAN RAFAEL CREEK BASIN
San Rafael Creek at San Rafael..... 422
Irwin Creek at San Rafael..... 423
CORTE MADERA CREEK BASIN
Corte Madera Creek at Ross..... 424
ARROYO CORTE MADERA DEL PRESIDIO BASIN
Arroyo Corte Madera del Presidio at Mill Valley..... 425
WALKER CREEK BASIN
Walker Creek near Tomales..... 426
SALMON CREEK BASIN
Salmon Creek at Bodega..... 427
RUSSIAN RIVER BASIN
Russian River near Ukiah..... 428
East Fork Russian River near Calpella..... 429
Lake Mendocino near Ukiah..... 430
East Fork Russian River near Ukiah..... 431
Russian River near Hopland..... 432
Russian River near Cloverdale..... 433
Big Sulphur Creek near Cloverdale..... 434
Maacama Creek near Kellogg..... 435
Russian River near Healdsburg..... 436
Dry Creek near Cloverdale..... 437
Dry Creek near Geyserville..... 438
Santa Rosa Creek:
Laguna de Santa Rosa near Graton..... 439
Russian River near Guerneville..... 440
GARCIA RIVER BASIN
Garcia River near Point Arena..... 441
NAVARRO RIVER BASIN
Navarro River near Navarro..... 442
NOYO RIVER BASIN
Noyo River near Fort Bragg..... 443
TENMILE RIVER BASIN
Tenmile River:
Middle Fork Tenmile River near Fort Bragg..... 444
MATTOLE RIVER BASIN
Mattole River near Petrolia..... 445
EEL RIVER BASIN
Lake Pillsbury near Potter Valley..... 446
Eel River below Scott Dam, near Potter Valley..... 447
Potter Valley powerhouse tailrace near Potter Valley..... 448
Eel River at Van Arsdale Dam, near Potter Valley..... 449
Eel River near Dos Rios..... 450
Outlet Creek near Longvale..... 451
Middle Fork Eel River:
Black Butte River near Covelo..... 452
Elk Creek near Hearst..... 453
Middle Fork Eel River near Dos Rios..... 454
North Fork Eel River near Mina..... 455
Eel River at Fort Seward..... 456
South Fork Eel River:
Elder Creek near Branscomb..... 457

Page

PACIFIC SLOPE BASINS IN CALIFORNIA--Continued
EEL RIVER BASIN--Continued
South Fork Eel River--Continued
Tenmile Creek near Laytonville..... 458
South Fork Eel River at Leggett..... 459
East Branch South Fork Eel River near Garberville..... 460
South Fork Eel River near Miranda..... 461
Bull Creek near Weott..... 462
Eel River at Scotia..... 463
Van Duzen River near Dinsmores..... 464
Van Duzen River near Bridgeville..... 465
Yager Creek near Carlotta..... 466
MAD RIVER BASIN
Ruth Reservoir near Forest Glen..... 467
Mad River near Forest Glen..... 468
Mad River near Kneeland..... 469
Mad River near Arcata..... 470
LITTLE RIVER BASIN
Little River near Trinidad..... 471
REDWOOD CREEK BASIN
Redwood Creek at South Park boundary, near Orick..... 472
Redwood Creek at Orick..... 473
LOST RIVER BASIN (CLOSED BASIN ADJACENT TO KLAMATH RIVER BASIN)
BUTTE VALLEY BASIN (CLOSED BASIN ADJACENT TO KLAMATH RIVER BASIN)
Butte Creek:
Antelope Creek near Tennant..... 474
KLAMATH RIVER BASIN
Klamath River below John C. Boyle powerplant, near Keno, Oreg..... 475
Reservoirs in Klamath River basin..... 476
Klamath River below Iron Gate Dam..... 477
Shasta River:
Little Shasta River near Montague..... 478
Shasta River near Yreka..... 479
Scott River:
East Fork Scott River below Houston Creek, near Callahan..... 480
East Fork Scott River above Kangaroo Creek, near Callahan..... 481
East Fork Scott River at Callahan..... 482
Cedar Gulch near Callahan..... 483
Scott River near Fort Jones..... 484
Klamath River near Seiad Valley..... 485
Indian Creek near Happy Camp..... 486
Salmon River at Somes Bar..... 487
Klamath River at Orleans..... 488
Trinity River above Coffee Creek, near Trinity Center..... 489
Clair Engle Lake near Lewiston..... 490
Judge Francis Carr powerplant near French Gulch..... 491
Trinity River at Lewiston..... 492
North Fork Trinity River at Helena..... 493
Trinity River near Burnt Ranch..... 494
South Fork Trinity River:
Hayfork Creek near Hyampom..... 495
South Fork Trinity River below Hyampom..... 496
Willow Creek near Willow Creek..... 497
Trinity River at Hoopa..... 498
Blue Creek near Klamath..... 499
Klamath River near Klamath..... 500
SMITH RIVER BASIN
Smith River near Crescent City..... 501

COOPERATION

The U.S. Geological Survey and organizations of the State of California have had cooperative agreements for the systematic collection of surface-water records since 1903. Organizations that supplied data are acknowledged in station descriptions. Organizations that assisted in collecting data through cooperative agreement with the Survey are:

California Department of Water Resources, William R. Gianelli, director.
Berrenda Mesa Water District, H. Ronald Lampson, engineer-manager.
Alameda County Flood Control and Water Conservation District, Paul E. Lanferman, engineer-manager.
Alameda County Water District, M. P. Whitfield, general manager-chief engineer.
Antelope Valley-East Kern Water Agency, W. G. Spinarski, manager.
Casitas Municipal Water District, Robert McKinney, general manager-chief engineer.
Coachella Valley County Water District, Lowell O. Weeks, general manager-chief engineer.
Contra Costa County Flood Control and Water Conservation District, C. C. Rich, chief engineer.
Desert Water Agency, Paul G. Payne, general manager.
East Bay Municipal Utility District, John S. Harnett, general manager.
Georgetown Divide Public Utility District, C. F. Gierau, general manager.
Imperial Irrigation District, R. F. Carter, general manager.
Madera Irrigation District, F. G. Bandy, secretary manager.
Montecito County Water District, E. A. Elevatorski, general manager.
Monterey County Flood Control and Water Conservation District, Loran Bunte, Jr., district engineer.
Napa County Flood Control and Water Conservation District, Edward Bernard, chairman.
Orange County Flood Control District, H. G. Osborne, chief engineer.
Orange County Water District, James R. Cofer, district engineer.
Paradise Irrigation District, C. Phillip Kelly, manager.
Riverside County Flood Control and Water Conservation District, John W. Bryant, chief engineer.
Sacramento County Department of Public Works, Water Resources Division, J. P. Alessandri, chief.
San Benito County Water Conservation and Flood Control District, Ralph G. Towle, secretary.
San Bernardino Valley Municipal Water District, Jack A. Beaver, general manager.
San Diego, County of, Department of Sanitation and Flood Control, C. J. Houson, director.
San Diego, City of, Water Utilities, Roy E. Dodson, director.
San Francisco, City and County Water Department, Arthur H. Frye, Jr., general manager and chief engineer.
San Luis Obispo County Engineering Department, George Protopapas, county engineer.
San Mateo County Flood Control District, Vic. K. Sanders, manager.
San Rafael, City of, Department of Public Works, Norris M. Rawles, director.
Santa Barbara City Water Department, Neil Mendenall, superintendent.
Santa Barbara County Flood Control and Water Conservation District, James Stubchaer, flood control engineer.
Santa Barbara County Water Agency, Francis H. Beattie, chairman.
Santa Clara County Flood Control and Water District, Donald K. Currlin, manager-counsel.
Santa Cruz, City Water Department, Weston L. Webber, director.
Santa Cruz County Flood Control and Water Conservation District, D. A. Porath, district engineer.
Santa Maria Valley Water Conservation District, Maurice F. Twitchell, secretary.
Santa Ynez River Conservation District, Andrew T. Petersen, president.

Siskiyou County Flood Control and Water Conservation District, David A. Gravenkamp, director of public works.
Tehachapi-Cummings County Water District, Robert J. Jasper, general manager.
Terra Bella Irrigation District, John E. Boudreau, engineer-manager.
Tulare County Flood Control District, Jack L. Carlsen, flood control engineer.
Turlock Irrigation District, R. S. Tillner, secretary-general manager.
United Water Conservation District, Richard A. Smith, general manager-chief engineer.
University of California (Berkeley), A. Starker Leopold, professor of zoology.
Ventura County Department of Public Works, J. B. Quinn, deputy director.
Western Municipal Water District, Howard A. Hicks, general manager.
Woodbridge Irrigation District, Mabel Hall, secretary.
Yolo County Flood Control and Water Conservation District, Bill McAnlis, general manager.

Assistance in the form of funds or services was given by the Corps of Engineers, U.S. Army; U.S. Navy; Bureau of Reclamation and National Park Service, U.S. Department of the Interior; Forest Service and Soil Conservation Service, U.S. Department of Agriculture; U.S. Atomic Energy Commission.

The following organizations and individuals aided in collecting records: Pacific Power and Light Co., Bear Valley Mutual Water Co., Metropolitan Water District of California, Fontana Union Water Co., Los Angeles City Department of Water and Power, Los Angeles County Flood Control District, Rancho California, Pacific Gas and Electric Co., Placer County Water Agency, Sacramento Municipal Utility District, Southern California Edison Co., Kern County Land and Water Co., Helix, Merced, Modesto, Nevada, Serrano and Carpenter, Oroville-Wyandotte, Oakdale-South San Joaquin, and Vista Irrigation Districts, Solano County Water Agency, and Yuba County Water Agency.

DEFINITION OF TERMS

Definition of terms related to streamflow and other hydrologic data, as used in this report, are defined as follows:

Acre-foot (AC-FT, acre-ft) is the quantity of water required to cover 1 acre to a depth of 1 foot and is equivalent to 43,560 cubic feet or 325,851 gallons.

Cfs-day is the volume of water represented by a flow of 1 cubic foot per second for 24 hours. It is equivalent to 86,400 cubic feet, 1.9835 acre-feet, or 646,317 gallons, and represents a runoff of 0.0372 inch from 1 square mile.

Contents is the volume of water in a reservoir or lake. Unless otherwise indicated, volume is computed on the basis of a level pool and does not include bank storage.

Control designates a feature downstream from the gage that determines the stage-discharge relation at the gage. This feature may be a natural constriction of the channel, an artificial structure, or a uniform cross section over a long reach of the channel.

Cubic foot per second (cfs) is the rate of discharge representing a volume of 1 cubic foot passing a given point during 1 second, and is equivalent to 7.48 gallons per second or 448.8 gallons per minute.

Discharge is the volume of water (or more broadly, total fluids), that passes a given point within a given period of time.

Drainage area of a stream at a specified location is that area, measured in a horizontal plane, enclosed by a topographic divide from which direct surface runoff from precipitation normally drains by gravity into the stream above the specified point. Figures of drainage area given herein include all closed basins, or noncontributing areas, within the area unless otherwise noted.

Gage height (G.H.) is the water-surface elevation referred to some arbitrary gage datum. Gage height is often used interchangeably with the more general term "stage," although gage height is more appropriate when used with a reading on a gage.

Gaging station is a particular site on a stream, canal, lake, or reservoir where systematic observations of gage height or discharge are obtained. When used in connection with a discharge record, the term is applied only to those gaging stations where a continuous record of discharge is obtained.

Partial-record station is a particular site where limited streamflow data are collected systematically over a period of years for use in hydrologic analyses.

Stage-discharge relation is the relation between gage height and the amount of water flowing in a channel, expressed as volume per unit of time.

WRD is used as an abbreviation for "Water-Resources Data" in the summary REVISIONS paragraph to refer to previously published State annual basic-data reports.

WSP is used as an abbreviation for "Water-Supply Paper" in references to previously published reports.

SPECIAL NETWORKS AND PROGRAMS

Hydrologic bench-mark station is one that provides hydrologic data for a basin in which the hydrologic regimen will likely be governed solely by natural conditions. Data collected at a bench-mark station may be used to separate effects of natural from manmade changes in other basins which have been developed and in which the physiography, climate, and geology are similar to those in the undeveloped bench-mark basin.

International Hydrological Decade (IHD) River Stations provide a general index of runoff and materials in the water balance (discharge of water, and dissolved and transported solids) of the world. In the United States, IHD Stations provide indices of runoff and of the general distribution of water in the principal river basins of the conterminous United States and Alaska.

DOWNSTREAM ORDER AND STATION NUMBERS

Records are listed in a downstream direction along the main stream, and stations on tributaries are listed between stations on the main stream in the order in which those tributaries enter the main stream. Stations on tributaries entering above all mainstream stations are listed before the first mainstream station. Stations on tributaries to tributaries are listed in a similar manner. In the list of gaging stations in the front of this report the rank of tributaries is indicated by indention, each indention representing one rank.

As an added means of identification, each gaging station and partial-record station has been assigned a station number. These are in the same downstream order used in this report. In assigning station numbers, no distinction is made between partial-record stations and continuous-record gaging stations; therefore, the station number for a partial-record station indicates downstream order position in a list made up of both types of stations. Gaps are left in the numbers to allow for new stations that may be established; hence the numbers are not consecutive. The complete 8-digit station number for each station, such as 11120800 includes the part number "11", the first two digits, followed by a 6-digit station number. In this report the complete number appears just to the left of the station name. In this report, the records are listed in downstream order by parts. All records for a drainage basin encompassing more than one State could be arraed in downstream order by assembling pages from the various State reports by station number to include all records in the basin.

EXPLANATION OF SURFACE-WATER DATA

Collection and Computation of Data

The base data collected at gaging stations consists of records of stage and measurements of discharge of streams or canals, and stage, surface area, and contents of lakes or reservoirs. In addition, observations of factors affecting the stage-discharge relation or the stage-capacity relation, weather records, and other information are used to supplement base data in determining the daily flow or volume of water in storage. Records of stage are obtained from a water-stage recorder that gives a continuous graph of the fluctuations (for digital recorders, a tape punched at 15-, 30-, or 60-minute intervals) or from direct readings on a nonrecording gage. Measurements of discharge are made with a current meter, using the general methods adopted by the Geological Survey on the basis of experience in stream gaging since 1888. These methods are described in standard textbooks on the measurement of stream discharge. (See also SELECTED REFERENCES.) Surface areas of lakes or reservoirs are determined from instrument surveys using standard methods. The configuration of the reservoir bottom is determined by sounding at many points.

For a stream-gaging station rating tables giving the discharge for any stage are prepared from stage-discharge relation curves defined by discharge measurements. If extensions to the rating curves are necessary to define the extremes of discharge, they are made on the basis of indirect measurements of peak discharge (such as slope-area or contracted-opening measurements, computation of flow over dams or weirs), velocity-area studies, and logarithmic plotting. The application of the daily mean gage heights to the rating table gives the daily mean discharge from which the monthly and the yearly mean discharge are computed. If the stage-discharge relation is subject to change because of frequent or continual change in the physical features that form the control, the daily mean discharge is determined by the shifting-control method, in which correction factors based on individual discharge measurements and notes by engineers and observers are used in applying the gage heights to the rating tables. If the stage-discharge relation for a station is temporarily changed by the presence of aquatic growth or debris on the control, the daily mean discharge is computed by what is basically the shifting-control method.

At some stream-gaging stations the stage-discharge relation is affected by backwater from reservoirs, tributary streams, or other

sources. This necessitates the use of the slope method in which the slope or fall in a reach of the stream is a factor in determining discharge. Information required for determining the slope or fall is obtained by means of an auxiliary gage set at some distance from the base gage. At some stations the stage-discharge relation is affected by changing stage; at these stations the rate of change in stage is used as a factor in determining discharge.

At some stream-gaging stations the stage-discharge relation is affected by ice in the winter, and it becomes impossible to compute the discharge in the usual manner. Discharge for periods of ice effect is computed on the basis of the gage-height record and occasional winter discharge measurements, consideration being given to the available information on temperature and precipitation, notes by gage observers and hydrologists, and comparable records of discharge for other stations in the same or nearby basins.

For a lake or reservoir station, capacity tables giving the contents for any stage are prepared from stage-area relation curves defined by surveys. Discharge over spillways is computed from a stage-discharge relation curve defined by discharge measurements. The application of the stage to the capacity table gives the contents, from which the daily, monthly, or yearly change in contents is computed.

If the stage-capacity curve is subject to changes because of deposition of sediment in the reservoir, periodic resurveys of the reservoir are necessary to define new stage-capacity curves. During the period between reservoir surveys the computed contents may be increasingly in error due to the gradual accumulation of sediment.

For some gaging stations there are periods when no gage-height record is obtained or the recorded gage height is so faulty that it cannot be used to compute daily discharge or contents. This happens when the recorder stops or otherwise fails to operate properly, intakes are plugged, the float is frozen in the well, or for various other reasons. For such periods the daily discharges are estimated on the basis of recorded range in stage, adjoining good record, discharge measurements, weather records, and comparison with other station records from the same or nearby basins. Likewise daily contents may be estimated on the basis of operator's log, adjoining good record, inflow-outflow studies, and other information.

The data in this report generally comprise a description of the station and tabulations of basic data. For gaging stations on streams or canals a table showing the daily discharge and monthly and yearly discharge is given. For gaging stations on lakes and reservoirs a monthly summary table of stage and contents or a table showing the daily contents is given. Tables of daily mean gage heights are included for some streamflow stations and for some reservoir stations. Records are published for the water year, which begins on October 1 and ends on September 30. A calendar for the 1972 water year is shown on the reverse side of the front cover to facilitate finding the day of the week for any date.

The description of the gaging station gives the location, drainage area, period of record, type and history of gages, average discharge, extremes of discharge or contents, and general remarks. The location of the gaging station and the drainage area are obtained from the most accurate maps available. River mileage, given "LOCATION" for some stations, is that determined and used by the Corps of Engineers or other agencies. Periods for which there are published records for the present station or for stations generally equivalent to the present one are given under "PERIOD OF RECORD." The type of gage currently in use, the datum of the present gage above mean sea level, and a condensed history of the types, locations, and datums of previous gages used during the period of record are given under "GAGE." In references to datum of gage, the phrase "mean sea level" denotes "Sea Level Datum of 1929" as used by the

Topographic Division of the Geological Survey, unless otherwise qualified. The average discharge for the number of years indicated is given under "AVERAGE DISCHARGE"; it is not given for stations having fewer than 5 complete years of record or for stations where changes in water development during the period of record cause the figure to have little significance. In addition, the median of yearly mean discharges is given for stream-gaging stations having 10 or more complete years of record if the median differs from the average by more than 10 percent. The maximum discharge (or contents) and the maximum gage height, the minimum discharge if there is little or no regulation (or the minimum contents), and the minimum gage height if it is significant are given under "EXTREMES." The minimum daily discharge is given if there is extensive regulation (also the minimum discharge and gage height if they are abnormally low). In the first paragraph headed "Current year:" the data given are for the complete current water year unless otherwise specified. In the second paragraph under "EXTREMES" headed "Period of record:" the data given are for the period of record given in the PERIOD OF RECORD paragraph. Reliable information concerning major floods that occurred outside the period of record is given in the third or last paragraph under "EXTREMES." Unless otherwise qualified, the maximum discharge (or contents) corresponds to the crest stage obtained by use of a water-stage recorder (graphic or digital), a crest-stage gage, or a nonrecording gage read at the time of the crest. If the maximum gage height did not occur at the same time as the maximum discharge or contents, it is given separately. Information pertaining to the accuracy of the discharge records, to conditions that affect the natural flow at the gaging station, and availability of Water Quality records, is given under "REMARKS"; for reservoir stations information on the dam forming the reservoir, the capacity, outlet works and spillway, and purpose and use of the reservoir, is also given under "REMARKS."

Previously published records of some stations have been found to be in error on the basis of data or information later obtained. Revisions of such records are usually published along with the current records in one of the annual or compilation reports. In order to make it easier to find such revised records, a paragraph headed "REVISIONS (WATER YEARS)" has been added to the description of all stations for which revised records have been published. Listed therein are all the reports in which revisions have been published, each followed by the water years for which figures are revised in that report. In listing the water years only one number is given; for instance, 1933 stands for the water year October 1, 1932, to September 30, 1933. If no daily, monthly, or annual figures of discharge were revised, that fact is brought out by notations after the year dates as follows: "(M)" means that only the instantaneous maximum discharge was revised; "(m)" that only the instantaneous minimum was revised; and "(P)" that only peak discharges were revised. If the drainage area has been revised, the report in which the revised figure was first published is given. It should be noted that for all stations for which cubic feet per second per square mile and runoff in inches are published, a revision of the drainage area necessitates corresponding revision of all figures based on the drainage area. Revised figures of cubic feet per second per square mile and runoff in inches resulting from a revision of the drainage area only are usually not published in the annual series of reports.

Skeleton rating tables are published for stream-gaging stations where they serve a useful purpose and the dates of applicability can be easily identified.

Skeleton capacity tables are published for all reservoirs for which records of contents are published on a daily basis.

The daily tables for stream-gaging stations give the discharge corresponding to the daily mean gage height unless there are large or rapid changes in the discharge during a day. For days having large or rapid changes, discharge for the day is computed by averaging the mean

discharge for several parts of a day. For digital recorders, the daily mean discharge is always the average of the discharges at each punched reading. For stations equipped with nonrecording gages, the daily discharge corresponds to once-daily readings of the gage or to the mean of twice-daily readings; but for periods of rapidly changing stage the discharge is determined from a gage-height graph based on gage readings.

The daily tables for reservoir stations give the contents corresponding to the water-surface elevation at a given time, usually at 2400 each day. For some reservoirs the elevation at a given time is given in the daily table.

The monthly summary is given below the daily table. For stream-gaging stations the line headed "TOTAL" gives the sum of the daily figures; it is the total cubic feet per second per day for the month. The line headed "MEAN" gives the average flow in cubic feet per second during the month. The lines headed "MAX" and "MIN" give the maximum and minimum daily discharges, respectively, for the month. Discharge for the month also is expressed in acre-feet (line headed "AC-FT").

For reservoir stations the monthly summary gives the elevation (or gage height) at the end of the month and the change in contents during the month. If elevation or gage height is given in the daily table, the monthly summary gives the contents at the end of the month, rather than the elevation or gage height. For some reservoirs a tabulation of monthly evaporation from the water surface also is included.

In the yearly summary below the monthly summary, the figures of maximum are the maximum daily discharges for the calendar and water years; likewise, the minimums in this summary are the minimum daily discharges.

For reservoir stations the yearly summary gives the change in contents for the calendar year and for the water year. For some reservoirs the yearly evaporation also is included.

Peak discharges and their times of occurrence and corresponding gage heights for many stations are listed below the yearly summary. All independent peaks above the selected base are given. The base discharge, which is given in parentheses, is selected so that an average of about three peaks a year can be presented. Peak discharges are not published for any canals, ditches, drains, or for any stream for which the peaks are subject to substantial control by man. Time of day is expressed in 24-hour local standard time; for example, 12:30 a.m. is 0030 and 1:30 p.m. is 1330.

In a general footnote, introduced by the word "NOTE" certain periods are indicated for which the discharge is computed or estimated by special methods because of no gage-height record, backwater from various sources, or other unusual conditions. Periods of no gage-height record are indicated if the period is continuous for a month or more or includes the maximum discharge for the year. Periods of backwater from an unusual source, of indefinite stage-discharge relation, or of any other unusual condition at the gage are indicated only if they are a month or more in length and the accuracy of the records is affected. Days on which the stage-discharge relation is affected by ice are not indicated. The methods used in computing discharge for various unusual conditions have been explained in preceding paragraphs. Footnotes to reservoir tables may be used to explain the use of new capacity tables or for other special conditions.

Accuracy of Data

The accuracy of discharge data depends primarily on (1) the stability of the stage-discharge relation or, if the control is unstable, the frequency of discharge measurements, and (2) the accuracy of observations of stage, measurements of discharge, and interpretation of records.

The station description under "REMARKS" states the degree of accuracy of the records. "Excellent" means that about 95 percent of the daily discharges is within 5 percent; "good" within 10 percent; and "fair" within 15 percent. "Poor" means that daily discharges have less than "fair" accuracy.

Figures of daily mean discharge in this report are shown to the nearest hundredth of a cubic foot per second for discharges of less than 1 cfs; to tenths between 1.0 and 10 cfs; to whole numbers between 10 and 1,000 cfs; and to 3 significant figures above 1,000 cfs. The number of significant figures used is based solely on the magnitude of the figure. The same rounding rules apply to discharge figures listed for partial-record stations and miscellaneous sites.

Discharge at many stations, as indicated by the monthly mean, may not reflect natural runoff due to the effects of diversion, consumptive use, regulation, evaporation, or other factors. Evaporation from a reservoir is not included in the adjustments for changes in reservoir contents, unless it is so stated. Even at those stations where adjustments are made, large errors in computed runoff may occur if adjustments or unadjusted losses (consumptive use, evaporation, seepage, etc.) are large in comparison with the observed discharge.

Publications

Each volume of the 1960 series of U.S. Geological Survey water-supply papers entitled "Surface Water Supply of the United States" contains a listing of the numbers of all water-supply papers in which records of surface-water data were published for the area covered by the individual volumes. Each volume also contains a list of water-supply papers that give detailed information on major floods for the area. A new series of water-supply papers containing surface-water records for the 5-year period October 1, 1960, to September 30, 1965, also includes lists of annual and special reports published as water-supply papers.

Records through September 1950 for the area covered by this report have been compiled and published in Water-Supply Papers 1313(9), 1314(10), and 1315 A and B(11); records for October 1950 to September 1960 have been compiled and published in Water-Supply Papers 1733(9), 1734(10), and 1735(11). These reports contain summaries of monthly and annual discharge and monthend storage for all previously published records, as well as some records not contained in the annual series of water-supply papers. All records were reexamined and revised where warranted. Estimates of discharge were made to fill short gaps whenever practical. The yearly summary table for each gaging station lists the numbers of the water-supply papers in which daily records were published for that station.

Special reports on major floods or droughts or of other hydrologic studies for the area have been issued in publications other than water-supply papers. Information relative to these reports may be obtained from the district office.

Other Data Available

Data collected at partial-record stations and at miscellaneous sites are given in three tables at the end of the surface-water records in this report. The first is a table of discharge measurements at low-flow partial-record stations, the second is a table of annual maximum stage and discharge at crest-stage stations, and the third is a table of discharge measurements at miscellaneous sites. Occasionally, discharge measurements are made within a short time period to investigate the seepage gains or losses along a reach of a stream or to determine the low-flow characteristics of an area. Such measurements are also at the end of this report. Data for most crest-stage partial-record stations in California are not included in this report. They are published separately in an annual report, "Floods from Small Drainage Areas," copies of which may be obtained from the district office.

More detailed information than that published for most of the gaging stations, such as discharge measurements, gage-height records, and rating tables, is on file in the district office. Many gaging-station records in California through 1958 have been analyzed to give several statistical summaries: (1) the number of days in each year that the daily discharge was between selected limits (duration tables); (2) the lowest mean discharge for selected numbers of consecutive days in each year; and (3) the highest mean discharge for selected numbers of consecutive days in each year.

At or near some gaging stations, water-quality records also are collected. Data are obtained on the chemical quality of the stream water, on water temperature, on suspended-sediment concentration, and on the particle-size distribution of suspended sediment and bed material. These data are given in Part 2 of this report. Under the "REMARKS" paragraph of the gaging-station description, reference is made to water-quality records collected on a regular basis.

HYDROLOGIC CONDITIONS

In most of California, runoff during water year 1972 was markedly less than normal. Some basins in the extreme northwestern part of the state, however, experienced above-normal runoff.

Rainfall was well below normal over most of the state and snowpacks were also below normal. Because temperatures were generally somewhat higher than usual, melting occurred early and kept the contents of most reservoirs above their normal levels. This, together with reservoir storage held over from previous wetter years, provided a generally adequate supply of water for irrigation needs despite drought conditions that adversely affected many rangeland and dry-farming areas. Some communities found it necessary to impose limited water rationing during the late summer months.

In October, storms that moved in from the north caused high runoff in the northern part of the state, but the intensity of the storms diminished rapidly as they moved southward. October runoff was therefore high in the northwestern part of the state, as it had been for

several months preceding, but was near normal throughout much of the state and was below normal in the south. In November there was very little precipitation and streamflow generally declined. Then in late December, widespread storms brought rainfall to most of California. Much of the 1971-72 snowpack in the Sierra Nevada and the mountains of Southern California accumulated during these storms. Precipitation was very heavy in some South Coastal areas, and the peak flow of some of the small streams in that region approached or exceeded the flows that occurred in 1969.

After the storms of December, rainfall was generally above normal in the North Coast area but below normal in most of the state, and runoff declined. The North Coast area was visited by an intense but relatively short and localized storm on March 1 and 2, with unusually high peak flows on Little River, Redwood Creek, and Smith River. In contrast, January through March was the driest for that 3-month period in the 99-year history of the Los Angeles Weather Bureau.

During June in the southern San Joaquin Valley and during August in the Mojave Desert, there were localized and scattered but intense storms that caused flash floods in some small areas. During June a levee break caused flooding of Andrus and Brannan Island, which lies below sea level in the Sacramento-San Joaquin Delta. The island and the community of Isleton were evacuated until the levee was repaired and the water was pumped out. The flood was not associated with hydrologic causes, but at the time some news reports mistakenly implied that it was caused by unusual storms.

The areal trend in total runoff in California for the water year 1972 is shown in figure 1, where runoff is given as a percentage of the median annual runoff for the 30-year period, 1941-70. The circled figures on the map are the percentages for index stream-gaging stations in the various hydrographic areas. The North Coast area, with 118 percent, was the only area that experienced runoff greater than the median. In other areas of the state runoff ranged from 28 percent of the 30-year median, in the San Francisco Bay region, to 71 percent in the South Coast region. These percentages indicate the severity of the drought in all regions of the state except the North Coast.

SELECTED REFERENCES

Carter, R. W., and Davidian, Jacob, 1968, General procedure for gaging streams: U.S. Geol. Survey Techniques Water-Resources Inv., book 3, chap. A6, 13 p.

Corbett, D. M., and others, 1943, Stream-gaging procedure, a manual describing methods and practices of the Geological Survey: U.S. Geol. Survey Water-Supply Paper 888, 245 p.

Langbein, W. B., and Iseri, K. T., 1960, General introduction and hydrologic definitions: U.S. Geol. Survey Water-Supply Paper 1541-A, 29 p.

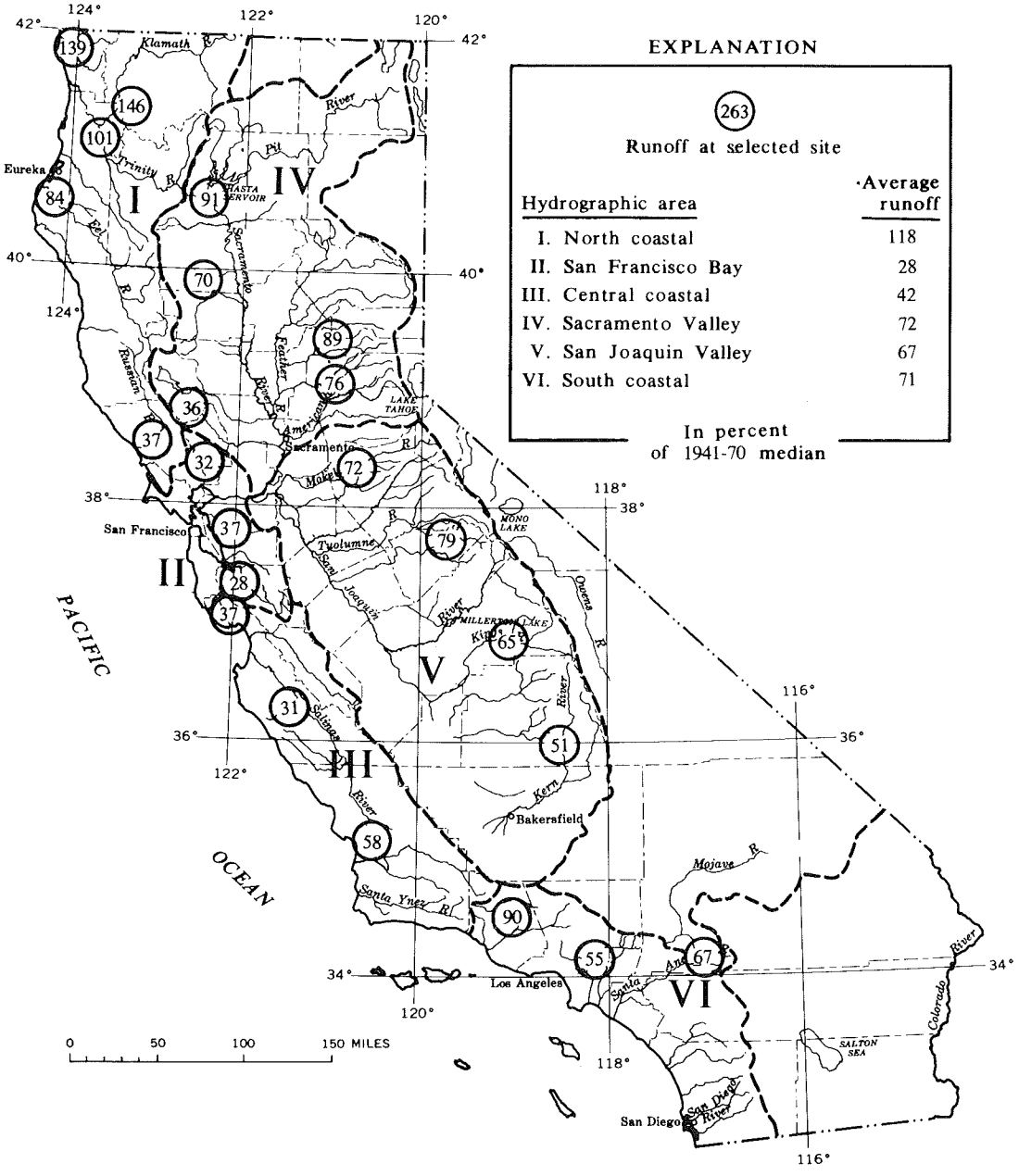

FIGURE 1.--Runoff for the 1972 water year.

09423000 COLORADO RIVER BELOW DAVIS DAM, ARIZ.-NEV.

LOCATION.--Lat 35°11'30", long 114°34'17", in SE¼NE¼ sec.1, T.32 S., R.66 E., Mount Diablo meridian, in Nevada, Clark County, on right bank 0.5 mile downstream from Davis Dam, 29 miles west of Kingman, Ariz., and 68 miles downstream from Hoover Dam.

DRAINAGE AREA.--169,300 sq mi, approximately.

PERIOD OF RECORD.--June 1905 to September 1907 (published as "at Hardyville"), March 1949 to current year.

GAGE.--Water-stage recorder. Datum of gage is 500.00 ft above mean sea level; gage readings have been reduced to elevations above mean sea level. 1905-7, nonrecording gage at site 4.8 miles downstream at datum about 13.4 ft lower. Mar. 16 to May 3, 1949, water-stage recorder at site 0.5 mile downstream at present datum. May 4, 1949, to Feb. 24, 1956, water-stage recorder at site 400 ft upstream at present datum.

AVERAGE DISCHARGE (unadjusted).--23 years (1949-72), 12,760 cfs (9,245,000 acre-ft per year).

EXTREMES.--Current year: Maximum discharge, 26,600 cfs July 15 (elevation, 506.00 ft); minimum daily, 4,610 cfs Nov. 28.
1905-7: Maximum daily discharge, 116,000 cfs June 20, 1906; minimum daily, 2,850 cfs Jan. 5, 1906.
1949 to current year: Maximum discharge, 31,200 cfs Apr. 22, 1952 (elevation, 513.91 ft); no flow at Davis Dam parts of several days July to September and Dec. 27, 1950, when gates in dam were closed; minimum daily discharge, 285 cfs Aug. 3, 1950.

REMARKS.--Records excellent. Flow regulated by Lake Mead since Feb. 1, 1935, and by Lake Mohave since Jan. 17, 1950. Many diversions upstream for irrigation, industrial, and municipal uses.

DISCHARGE, IN CUBIC FEET PER SECOND, WATER YEAR OCTOBER 1971 TO SEPTEMBER 1972

DAY	OCT	NOV	DEC	JAN	FEB	MAR	APR	MAY	JUN	JUL	AUG	SEP
1	6,860	5,230	6,730	7,280	7,700	10,500	17,700	14,900	7,520	18,900	16,800	10,300
2	6,720	7,090	5,860	7,190	6,300	11,400	13,000	14,700	9,750	13,100	15,200	11,200
3	7,710	7,670	5,960	8,240	8,970	14,200	17,800	14,600	14,300	19,100	16,300	9,720
4	7,650	7,530	5,920	9,090	10,500	13,600	16,600	16,300	13,200	15,900	16,200	11,700
5	9,550	7,550	5,880	9,720	9,830	10,000	15,300	16,800	14,700	16,800	18,100	11,000
6	8,730	7,980	6,750	9,310	9,820	14,700	17,200	18,300	14,000	13,800	13,200	12,300
7	9,450	7,860	6,620	8,230	10,400	15,000	17,200	13,000	13,300	14,100	16,500	12,500
8	9,100	8,060	5,590	8,180	10,500	14,900	17,200	15,500	9,570	14,700	15,100	12,500
9	9,040	8,550	6,970	7,770	11,400	15,300	12,600	14,700	13,700	11,800	9,980	13,300
10	9,540	7,050	9,290	9,210	11,400	15,000	17,400	12,800	13,700	14,200	12,200	9,750
11	9,810	7,120	9,880	6,970	11,100	14,600	18,000	12,900	13,000	16,000	15,400	12,900
12	9,710	6,980	8,200	5,580	11,500	10,200	16,200	14,200	13,200	16,000	15,400	14,900
13	9,590	7,020	8,290	6,390	10,200	16,100	14,900	14,800	13,200	18,000	12,800	12,900
14	9,750	6,970	7,980	6,580	11,400	15,100	11,300	14,000	11,700	19,100	14,800	12,400
15	10,900	7,980	6,390	7,030	10,300	14,100	11,600	14,800	14,300	20,000	13,700	12,800
16	10,800	9,140	8,580	6,900	11,000	14,800	11,600	12,600	17,100	13,700	12,100	13,400
17	9,520	8,060	9,180	6,680	10,300	13,100	15,400	13,800	16,400	17,800	12,200	9,740
18	8,320	9,150	9,160	5,870	11,000	15,000	15,700	14,900	11,800	14,300	12,400	12,000
19	6,190	8,120	7,790	5,850	11,000	11,100	15,700	14,800	16,200	14,500	12,300	8,110
20	6,790	8,490	8,130	7,130	11,100	17,100	15,800	14,700	15,000	17,600	12,200	9,210
21	6,990	6,450	5,300	6,810	12,200	17,900	18,000	12,700	14,200	17,600	12,500	11,300
22	8,730	7,010	5,000	7,080	13,000	17,500	19,000	13,100	16,400	18,700	12,800	13,300
23	8,880	5,770	5,210	7,290	11,400	17,600	13,200	10,900	18,500	13,200	12,700	13,200
24	7,880	5,560	6,660	7,110	10,100	17,800	17,000	8,130	16,400	17,900	14,900	9,890
25	8,480	5,490	5,650	6,880	11,300	17,900	14,400	12,200	12,800	16,800	14,800	10,800
26	5,690	5,090	6,640	7,850	11,300	11,800	13,500	16,700	15,600	14,600	12,900	11,000
27	6,430	6,380	9,340	8,230	10,100	18,100	14,100	12,700	15,200	14,500	11,600	10,900
28	6,430	4,610	6,770	8,880	11,600	16,800	13,400	12,000	16,100	15,200	9,730	12,000
29	7,070	4,760	6,370	8,800	11,400	16,800	13,400	12,400	18,100	16,900	7,930	11,800
30	6,580	6,000	7,860	7,780	------	16,700	12,300	16,800	19,600	12,900	8,130	10,700
31	5,770	------	7,280	7,290	------	15,600	------	12,400	------	18,100	11,300	------
TOTAL	254,660	210,720	221,230	233,200	308,120	460,300	456,500	433,130	428,540	495,800	412,170	347,520
MEAN	8,215	7,024	7,136	7,523	10,620	14,850	15,220	13,970	14,280	15,990	13,300	11,580
MAX	10,900	9,150	9,880	9,720	13,000	18,100	19,000	18,300	19,600	20,000	18,100	14,900
MIN	5,690	4,610	5,000	5,580	6,300	10,000	11,300	8,130	7,520	11,800	7,930	8,110
AC-FT	505,100	418,000	438,800	462,600	611,200	913,000	905,500	859,100	850,000	983,400	817,500	689,300

CAL YR 1971 TOTAL 4,157,780 MEAN 11,390 MAX 18,800 MIN 4,610 AC-FT 8,247,000
WTR YR 1972 TOTAL 4,261,890 MEAN 11,640 MAX 20,000 MIN 4,610 AC-FT 8,453,000

09423500 COLORADO RIVER AT NEEDLES, CALIF.

LOCATION.--Lat 34°51'06", long 114°36'33", in SE¼SE¼ sec.19, T.9 N., R.23 E., San Bernardino meridian, San Bernardino County, on right bank at Needles, 18 miles upstream from gaging station near Topock, Ariz., 31 miles downstream from Davis Dam, and 98 miles downstream from Hoover Dam.

DRAINAGE AREA.--170,600 sq mi, approximately.

PERIOD OF RECORD.--April 1931 to current year (elevations only).

GAGE.--Water-stage recorder. Datum of gage is 400.00 ft above mean sea level. Prior to May 15, 1942, at site 550 ft downstream and May 15, 1942, to Feb. 16, 1969, at site 200 ft upstream; at datum 66.23 ft higher prior to Jan. 12, 1952, and at present datum thereafter.

EXTREMES.--Current year: Maximum elevation, 470.17 ft July 1; minimum, 460.52 ft Dec. 28.
Period of record: Maximum elevation, 475.77 ft Nov. 30, 1944; minimum, 459.06 ft Nov. 14, 1969.

REMARKS.--Flow regulated by Lake Mead since Feb. 1, 1935, and by Lake Mohave since Jan. 17, 1950.

REVISIONS (WATER YEARS).--WSP 1119: 1931-47.

GAGE HEIGHT, IN FEET, WATER YEAR OCTOBER 1971 TO SEPTEMBER 1972

DAY	OCT	NOV	DEC	JAN	FEB	MAR	APR	MAY	JUN	JUL	AUG	SEP
1	62.34	61.86	61.82	62.63	62.54	64.83	66.78	65.55	64.13	68.18	67.22	64.26
2	62.46	61.87	62.10	62.59	62.61	64.30	66.22	66.20	62.72	66.63	66.94	64.30
3	62.55	62.48	61.67	61.82	62.68	65.36	68.42	66.15	65.12	-	67.15	64.26
4	63.05	62.90	61.78	63.16	63.64	65.90	67.14	66.77	65.72	-	66.75	64.30
5	63.13	62.79	61.76	63.60	65.04	65.10	66.59	66.41	65.68	-	68.01	64.82
6	63.62	62.87	61.85	63.91	63.99	64.90	66.84	67.96	66.15	-	66.12	64.66
7	63.73	62.99	62.13	63.58	63.50	66.43	67.40	66.23	65.47	-	66.51	65.25
8	63.71	63.04	62.21	63.02	64.16	66.31	67.39	66.02	65.13	-	66.57	65.19
9	63.56	63.05	61.72	63.19	64.52	66.59	66.39	66.15	64.58	-	65.49	66.23
10	63.59	63.06	63.00	63.21	64.84	66.34	66.10	65.80	65.72	65.45	64.41	64.78
11	64.04	62.50	63.95	63.13	64.58	66.51	67.57	65.17	65.37	66.17	65.84	64.14
12	63.93	62.46	63.56	62.50	64.79	65.45	67.32	65.44	65.50	65.72	66.61	65.59
13	64.10	62.46	63.11	61.81	64.67	65.57	66.74	66.47	65.46	64.62	65.86	65.90
14	63.88	62.43	62.95	62.27	64.20	66.88	65.83	66.25	65.22	68.91	65.88	65.34
15	64.14	62.48	62.72	62.49	64.59	66.31	64.35	65.39	65.54	67.47	65.79	65.31
16	64.43	63.11	62.43	62.56	64.38	66.33	64.64	65.95	66.69	-	65.57	65.53
17	64.16	63.26	63.58	62.18	64.46	65.97	65.51	65.07	67.33	-	65.20	64.77
18	63.51	63.12	63.43	62.25	64.36	65.98	66.34	65.73	65.60	-	64.95	64.50
19	62.95	63.15	63.21	61.91	64.50	65.75	66.72	66.49	65.57	-	65.10	64.09
20	62.12	63.07	63.11	61.97	64.45	65.20	66.48	66.08	66.63	-	65.13	63.32
21	62.61	63.04	62.68	62.67	65.14	67.14	67.66	65.64	66.05	-	65.25	63.98
22	63.01	61.96	61.39	62.54	65.25	67.69	68.11	65.27	66.64	-	65.31	65.91
23	63.50	62.34	61.24	62.50	65.16	67.39	66.74	65.31	67.44	-	65.40	65.58
24	63.63	61.61	61.37	62.59	64.55	67.43	66.32	64.37	67.27	-	65.87	64.75
25	62.73	61.52	62.08	62.42	64.24	67.55	66.85	63.07	66.27	-	66.34	63.65
26	63.18	61.56	61.59	62.32	64.69	66.10	65.82	65.99	65.64	-	65.88	64.40
27	61.65	61.20	62.64	62.93	64.57	65.95	65.81	66.30	66.54	66.30	64.99	64.43
28	62.23	61.83	62.93	63.44	64.51	67.19	65.77	65.08	66.73	66.25	64.40	64.46
29	62.64	61.02	62.36	63.36	64.66	67.29	65.62	64.91	67.39	67.05	63.68	64.87
30	62.32	61.06	62.20	63.25	------	67.21	65.59	66.00	68.22	66.38	63.03	64.68
31	62.24	------	62.74	62.70	------	66.46	------	66.38	------	66.95	64.04	------
MEAN	63.19	62.40	62.43	62.73	64.32	66.24	66.50	65.79	65.92	-	65.65	64.78
MAX	64.43	63.26	63.95	63.91	65.25	67.69	68.42	67.96	68.22	-	68.01	66.23
MIN	61.65	61.02	61.24	61.81	62.54	64.30	64.35	63.07	62.72	-	63.03	63.32

09424000 COLORADO RIVER NEAR TOPOCK, ARIZ.

LOCATION.--Lat 34°41'15", long 114°27'43", in SW¼NW¼ sec.13, T.15 N., R.21 W., Gila and Salt River meridian, Mohave County, on left bank in Mohave Canyon, 2.7 miles downstream from Topock, 39.5 miles upstream from Parker Dam, and 49 miles downstream from Davis Dam.

DRAINAGE AREA.--172,300 sq mi, approximately.

PERIOD OF RECORD.--January 1917 to current year. Daily mean elevations published since October 1938.

GAGE.--Water-stage recorder. Datum of gage is 423.02 ft above mean sea level; gage readings have been reduced to elevations above mean sea level. Prior to Dec. 3, 1922, at site about 1 mile upstream at different datum.

AVERAGE DISCHARGE.--17 years (1917-34), 20,260 cfs (14,670,000 acre-ft per year); 38 years (1934-72), 13,090 cfs (9,484,000 acre-ft per year), unadjusted.

EXTREMES.--Current year: Maximum discharge, 18,800 cfs Apr. 23; maximum elevation, 455.88 ft July 1; minimum daily discharge, 4,880 cfs Oct. 1; minimum elevation, 449.95 ft Nov. 27.
1917-34: Maximum discharge probably exceeded 200,000 cfs June 22, 1921; minimum, 1,480 cfs Aug. 17, 1934.
1934 to current year: Maximum discharge, 35,700 cfs Jan. 29, 1942; maximum elevation, 457.37 ft July 9, 1959; minimum discharge, 375 cfs Feb. 14, 1935; minimum daily, 422 cfs Feb. 14, 1935.
Discharge of about 300,000 cfs (based on determination at Lees Ferry gaging station) occurred about July 10, 1884. Discharge in excess of 400,000 cfs (estimated) probably occurred within the period 1857-68 and most likely in 1862.

REMARKS.--Records good for October and excellent thereafter. Many diversions above station for irrigation, municipal, and industrial uses. Flow regulated by Lake Mead since Feb. 1, 1935, and by Lake Mohave since Jan. 17, 1950.

REVISIONS (WATER YEARS).--WSP 918: 1921. WSP 1313: 1918-19(M).

DISCHARGE, IN CUBIC FEET PER SECOND, WATER YEAR OCTOBER 1971 TO SEPTEMBER 1972

DAY	OCT	NOV	DEC	JAN	FEB	MAR	APR	MAY	JUN	JUL	AUG	SEP
1	4,880	5,880	5,850	7,470	6,840	10,900	15,000	11,900	11,900	17,200	15,600	10,300
2	5,650	5,520	6,770	7,430	6,950	10,400	15,200	13,400	8,800	15,900	15,100	9,980
3	5,390	6,840	6,140	7,160	6,210	11,200	13,300	13,300	10,000	13,500	13,900	10,400
4	6,260	7,410	6,090	7,980	8,300	13,200	15,600	13,900	12,600	15,900	14,700	9,630
5	6,390	7,460	6,080	8,880	10,400	12,700	15,200	14,100	12,300	14,800	15,600	10,900
6	7,520	7,320	6,170	9,500	9,580	10,400	14,600	15,600	13,200	15,300	15,400	10,400
7	7,350	7,780	6,720	9,250	8,670	13,400	15,900	15,200	12,700	13,300	13,300	11,400
8	7,700	7,760	6,640	8,370	9,410	14,000	16,200	13,000	12,500	13,500	14,800	11,500
9	7,820	7,880	6,120	8,200	10,200	14,200	15,700	13,800	10,400	13,600	14,100	12,700
10	7,690	8,270	7,330	8,040	10,700	14,400	13,000	13,300	12,700	12,000	10,900	11,700
11	8,290	7,180	9,340	8,870	10,900	14,300	15,900	12,300	12,600	14,300	12,100	9,180
12	8,410	7,260	9,700	7,250	10,700	13,500	16,600	12,300	12,400	15,100	14,100	11,600
13	8,470	7,110	8,510	5,920	11,100	11,300	15,500	13,500	12,500	15,100	14,000	13,100
14	8,490	7,150	8,330	6,300	10,100	14,400	14,100	13,500	12,300	16,000	12,600	11,800
15	8,960	7,000	8,140	6,440	10,900	13,900	11,700	12,600	11,800	16,600	13,400	11,600
16	9,630	7,860	6,780	6,910	10,300	13,300	11,500	13,300	13,600	16,000	12,900	11,900
17	9,470	8,700	8,840	6,660	10,700	13,300	11,900	12,100	15,100	15,100	11,900	11,900
18	8,770	8,170	9,100	6,430	10,300	12,500	14,000	12,800	13,700	15,700	11,800	9,950
19	7,820	8,830	9,120	5,750	10,700	13,200	14,400	14,000	11,600	14,500	11,800	10,900
20	6,320	8,260	8,150	5,620	10,900	10,700	14,400	13,900	13,700	15,100	11,700	8,220
21	6,690	8,630	8,270	6,600	11,200	14,500	15,300	13,600	13,100	15,400	11,700	8,800
22	6,930	6,840	5,980	6,560	11,900	16,300	16,600	12,600	13,300	16,000	11,700	11,600
23	8,210	7,200	5,490	6,670	12,300	16,100	16,500	12,900	14,600	15,800	12,000	12,100
24	8,700	6,220	5,570	6,660	11,300	16,200	13,300	11,700	15,700	13,500	11,900	11,700
25	7,600	5,880	6,770	6,630	10,400	16,400	15,000	9,430	14,000	15,200	13,300	9,100
26	8,050	5,820	6,050	6,430	11,000	15,700	13,500	12,000	12,200	15,000	13,100	10,100
27	6,200	5,520	6,830	7,090	11,100	12,000	12,800	14,300	13,600	13,900	11,700	10,200
28	6,300	6,360	8,710	7,730	10,400	15,300	13,300	12,400	13,800	13,700	10,800	10,200
29	6,630	5,170	7,100	8,000	11,200	15,500	12,900	11,700	14,800	14,400	9,450	10,900
30	6,970	5,100	6,610	7,730	------	15,800	12,700	12,300	16,200	14,900	8,100	10,800
31	6,630	------	7,600	7,240	------	14,700	------	14,400	------	13,500	8,300	------
TOTAL	230,190	212,380	224,900	225,770	294,660	423,700	431,600	405,130	387,700	459,800	391,750	324,560
MEAN	7,425	7,079	7,255	7,283	10,160	13,670	14,390	13,070	12,920	14,830	12,640	10,820
MAX	9,630	8,830	9,700	9,500	12,300	16,400	16,600	15,600	16,200	17,200	15,600	13,100
MIN	4,880	5,100	5,490	5,620	6,210	10,400	11,500	9,430	8,800	12,000	8,100	8,220
AC-FT	456,600	421,300	446,100	447,800	584,500	840,400	856,100	803,600	769,000	912,000	777,000	643,800

CAL YR 1971 TOTAL 4,009,410 MEAN 10,980 MAX 17,300 MIN 4,880 AC-FT 7,953,000
WTR YR 1972 TOTAL 4,012,140 MEAN 10,960 MAX 17,200 MIN 4,880 AC-FT 7,958,000

09424000 COLORADO RIVER NEAR TOPOCK, ARIZ.--Continued

GAGE HEIGHT, IN FEET, WATER YEAR OCTOBER 1971 TO SEPTEMBER 1972

DAY	OCT	NOV	DEC	JAN	FEB	MAR	APR	MAY	JUN	JUL	AUG	SEP
1	50.82	50.69	50.45	51.21	51.10	52.60	54.28	53.43	53.66	55.38	54.76	52.79
2	51.20	50.48	50.89	51.20	51.14	52.43	54.34	53.98	52.49	54.92	54.60	52.66
3	51.03	51.14	50.58	51.07	50.77	52.75	53.66	53.98	52.97	54.19	54.18	52.80
4	51.45	51.38	50.56	51.44	51.73	53.47	54.49	54.20	53.90	54.91	54.45	52.52
5	51.49	51.40	50.55	51.79	52.56	53.29	54.34	54.29	53.80	54.53	54.79	52.98
6	51.99	51.33	50.59	52.04	52.24	52.45	54.12	54.82	54.12	54.70	54.71	52.80
7	51.89	51.52	50.86	51.96	51.86	53.57	54.59	54.70	53.94	53.98	53.97	53.15
8	52.01	51.50	50.82	51.60	52.14	53.76	54.68	53.95	53.88	54.04	54.48	53.20
9	52.04	51.55	50.57	51.53	52.43	53.87	54.49	54.24	53.13	54.09	54.24	53.63
10	51.96	51.69	51.15	51.46	52.60	53.96	53.58	54.10	53.94	--	53.11	53.26
11	52.19	51.20	52.00	51.82	52.66	53.92	54.58	53.75	53.91	--	53.54	52.28
12	52.21	51.23	52.14	51.16	52.60	53.66	54.82	53.76	53.85	--	54.24	53.20
13	52.22	51.15	51.67	50.53	52.74	52.84	54.43	54.21	53.87	--	54.21	53.71
14	52.20	51.16	51.59	50.74	52.35	53.96	53.95	54.23	53.82	--	53.72	53.27
15	52.36	51.07	51.51	50.83	52.64	53.81	53.08	53.90	53.63	--	54.01	53.17
16	52.60	51.44	50.90	51.08	52.38	53.61	53.02	54.17	54.27	--	53.83	53.28
17	52.51	51.79	51.80	50.97	52.54	53.63	53.16	53.76	54.79	--	53.48	53.25
18	52.19	51.52	51.90	50.88	52.38	53.34	53.93	53.99	54.27	--	53.41	52.54
19	51.76	51.79	51.91	50.56	52.54	53.62	54.11	54.41	53.51	--	53.44	52.89
20	51.02	51.55	51.51	50.50	52.58	52.69	54.11	54.37	54.28	--	53.40	51.85
21	51.19	51.71	51.56	50.98	52.71	54.07	54.47	54.28	54.07	--	53.39	52.09
22	51.30	50.93	50.50	50.97	52.98	54.69	54.93	53.92	54.13	54.93	53.40	53.16
23	51.87	51.09	50.25	51.02	53.13	54.66	54.90	54.04	54.56	54.84	53.51	53.36
24	52.06	50.62	50.29	51.02	52.74	54.68	53.82	53.58	54.93	54.06	53.46	53.19
25	51.58	50.45	50.89	51.00	52.40	54.75	54.42	52.74	54.33	54.63	53.96	52.21
26	51.76	50.42	50.54	50.90	52.65	54.49	53.90	53.70	53.68	54.57	53.89	52.59
27	50.90	50.26	50.92	51.21	52.66	53.22	53.67	54.54	54.18	54.19	53.35	52.65
28	50.94	50.69	51.73	51.51	52.43	54.39	53.88	53.83	54.25	54.13	53.00	52.65
29	51.08	50.08	51.04	51.63	52.72	54.44	53.76	53.59	54.60	54.38	52.49	52.91
30	51.25	50.04	50.81	51.51	------	54.54	53.69	53.82	55.05	54.54	51.94	52.87
31	51.07	------	51.26	51.29	------	54.15	------	54.57	------	54.06	52.02	------
MEAN	51.68	51.10	51.09	51.21	52.36	53.72	54.11	54.03	53.99	--	53.71	52.90
MAX	52.60	51.79	52.14	52.04	53.13	54.75	54.93	54.82	55.05	--	54.79	53.71
MIN	50.82	50.04	50.25	50.50	50.77	52.43	53.02	52.74	52.49	--	51.94	51.85

NOTE.--Add 400.00 ft to obtain elevation above mean sea level.

09424150 COLORADO RIVER AQUEDUCT NEAR PARKER DAM, ARIZ.-CALIF.

LOCATION.--Lat 34°18'58", long 114°09'23", in NW¼SW¼ sec.28, T.3 N., R.27 E., San Bernardino meridian, in California, San Bernardino County, at intake pumping plant of Metropolitan Water District of Southern California on Lake Havasu, 1.8 miles upstream from Parker Dam, and 154 miles downstream from Hoover Dam.

PERIOD OF RECORD.--January 1939 to current year (monthly diversions only since October 1942). Published as a supplement to records for Colorado River below Parker Dam, 1942-50.

GAGE.--Venturi meters in pressure lines at intake pumping plant. Water-stage recorders with weirs on 4 percolation returns; prior to October 1964, miscellaneous measurements only.

AVERAGE DISCHARGE.--33 years, 802 cfs (581,000 acre-ft per year).

EXTREMES.--Period of record: Maximum daily diversion, 3,986 acre-ft (2,010 cfs) Oct. 25, 1970; no diversion at times.

REMARKS.--Pumping began Jan. 7, 1939. Figures of monthly diversion shown represent water pumped from Lake Havasu less return surface flow from Gene and Copper Basin Reservoirs. No water returned as surface flow from these reservoirs this year. Percolation return flow from Gene and Copper Basin Reservoirs was measured in four washes between pumping plant and Copper Basin Wash, each about 1 mile from the Colorado River. Infrequent storm runoff registered with percolation flow has not been deducted and is considered negligible. The percolation return flow is not subtracted from the diversion record.

COOPERATION.--Diversion records furnished by Metropolitan Water District of Southern California.

MONTHLY DIVERSIONS AND PERCOLATION RETURN FLOW, IN ACRE-FEET, WATER YEAR OCTOBER 1971 TO SEPTEMBER 1972

Month	Total percolation	Diversions			
		Maximum	Minimum	Mean	Total
October.....	354	3,691	3,361	3,476	107,763
November.....	350	3,773	3,323	3,454	103,620
December.....	367	3,761	0	2,671	82,797
CAL YR 1971.....	4,385	3,914	0	3,321	1,212,000
January.....	376	3,796	2,763	3,458	107,209
February.....	355	3,636	3,172	3,453	100,147
March.....	376	3,828	3,301	3,482	107,934
April.....	366	3,699	2,557	3,214	96,414
May.....	350	3,774	3,333	3,520	109,117
June.....	310	3,793	1,498	3,450	103,494
July.....	302	3,930	3,288	3,725	115,473
August.....	308	3,821	3,419	3,672	113,836
September.....	311	3,649	3,163	3,449	103,483
WTR YR 1972.....	4,125	3,930	0	3,419	1,251,287

09427500 LAKE HAVASU NEAR PARKER DAM, ARIZ.-CALIF.

LOCATION.--Lat 34°18'58"; long 114°09'23", in NW¼SW¼ sec.28, T.3 N., R.27 E., San Bernardino meridian, in California, San Bernardino County, at intake pumping plant for Colorado River aqueduct of Metropolitan Water District of Southern California, 1.8 miles upstream from Parker Dam on Colorado River, and 154 miles downstream from Hoover Dam.

DRAINAGE AREA.--178,800 sq mi, approximately.

PERIOD OF RECORD.--July 1938 to current year. Published as Parker Reservoir near Parker Dam, 1938.

GAGE.--Water-stage recorder. Datum of gage is 400.54 ft above mean sea level. Gage readings have been reduced to elevations above mean sea level.

EXTREMES.--Current year: Maximum contents, 623,600 acre-ft May 24 (elevation, 450.75 ft); minimum, 533,000 acre-ft Feb. 4 (elevation, 446.00 ft).
Period of record: Maximum contents, 693,000 acre-ft (by temporary use of flashboards) Apr. 18, 1943, June 4, 1953; maximum elevation, 450.77 ft June 26, 1958; minimum contents, 71,400 acre-ft June 25, 1942 (elevation, 412.09 ft).

REMARKS.--Lake is formed by concrete-arch dam; dam was completed and storage began July 1, 1938. Usable capacity (based on April 1957 re-survey by Bureau of Reclamation between elevations 430.54 and 450.54 ft) 619,400 acre-ft between elevations 400.54 (sill of regulating gates) and 450.54 ft (top of regulating gates). Prior to Oct. 1, 1956, different capacity table used. Dead storage, 28,600 acre-ft below elevation 400.54 ft (based on original survey). About 0.07 ft fall indicated between gage and Parker Dam under normal operating conditions. Drawdown below elevation 440.54 ft not legally permissible except by consent of the Metropolitan Water District of Southern California or in an emergency affecting the safety of the dam. Lake is used for flood control, power development, re-regulation of river for irrigation demand, and as a basin from which water is pumped by Metropolitan Water District of Southern California to Colorado River aqueduct. Figures given herein represent usable contents. For record of diversion to Colorado River aqueduct and return flow, see record for Colorado River aqueduct near Parker Dam (sta 09424150).

CONTENTS, IN ACRE-FEET, AT 2400, WATER YEAR OCTOBER 1971 TO SEPTEMBER 1972

DAY	OCT	NOV	DEC	JAN	FEB	MAR	APR	MAY	JUN	JUL	AUG	SEP
1	569,200	561,100	551,900	540,200	540,900	551,200	569,200	596,800	621,200	610,000	598,400	575,800
2	566,700	557,700	552,800	539,100	537,700	550,800	570,500	597,800	612,000	610,600	598,200	574,100
3	563,500	556,400	551,700	540,200	534,800	546,700	567,300	598,000	605,600	606,400	597,200	574,300
4	563,100	556,500	551,700	536,400	533,000	546,700	570,100	599,600	606,600	610,600	597,800	571,600
5	562,200	557,300	548,800	536,200	535,000	547,700	572,600	602,200	604,600	611,400	600,600	570,700
6	564,200	556,400	547,200	538,000	537,300	542,000	576,400	606,200	607,000	613,400	604,600	570,100
7	565,400	555,800	548,500	540,200	538,000	541,600	576,200	610,400	612,600	610,800	602,200	568,800
8	565,200	556,500	546,300	541,800	538,700	542,300	577,000	609,000	617,200	606,600	605,200	567,800
9	564,800	554,400	543,800	541,600	540,200	545,600	577,200	611,800	610,200	604,600	607,800	567,300
10	561,300	557,100	542,300	540,200	544,100	547,400	573,000	615,000	609,800	594,600	603,200	566,700
11	558,800	558,100	542,700	544,000	546,300	547,900	575,200	616,400	609,600	589,700	597,800	560,300
12	557,100	558,800	544,000	546,500	546,500	547,600	581,100	613,800	609,000	590,100	597,400	559,800
13	556,500	556,700	545,600	548,100	547,400	541,800	588,000	613,800	607,400	589,300	599,400	565,600
14	557,700	556,200	542,700	548,800	545,000	543,400	589,700	613,000	607,200	589,700	597,200	569,200
15	554,800	552,400	542,700	547,700	545,400	548,300	587,600	611,400	606,600	592,200	597,600	569,700
16	555,800	551,200	539,800	548,800	545,000	553,100	583,000	611,600	605,400	596,800	597,600	570,100
17	557,700	552,600	540,900	548,100	548,100	551,900	575,400	610,200	607,000	594,600	596,000	569,600
18	560,500	553,900	543,400	547,200	547,600	548,600	577,200	611,000	606,600	596,200	593,000	567,300
19	562,500	554,400	545,200	546,500	547,400	547,200	579,000	613,600	599,800	594,600	590,100	568,600
20	562,900	554,400	544,700	546,100	548,600	539,100	582,500	617,200	601,000	595,800	587,800	564,200
21	562,900	556,500	547,900	545,200	548,300	540,200	584,600	618,600	599,600	596,200	585,100	561,600
22	559,600	555,400	551,000	543,600	549,500	546,300	588,400	619,400	599,000	598,400	583,200	562,400
23	560,900	556,700	551,900	542,700	552,800	554,600	592,000	621,400	600,600	600,400	579,400	564,200
24	560,500	558,200	549,200	541,800	555,200	556,900	590,400	621,600	604,400	599,400	577,000	565,800
25	560,700	558,400	548,500	540,500	553,700	559,400	595,000	616,400	605,400	603,200	578,100	561,300
26	564,400	557,900	544,900	539,300	553,700	562,900	597,400	612,400	602,400	606,000	579,600	559,800
27	563,300	557,300	541,400	540,900	553,000	558,600	600,000	615,000	603,800	607,600	581,300	559,800
28	563,300	556,900	543,100	542,700	550,800	559,200	601,200	613,800	603,800	605,000	582,800	561,800
29	562,700	555,400	542,500	545,800	551,200	563,700	599,600	610,000	604,200	603,000	583,400	563,800
30	563,300	553,500	543,600	545,200	------	569,200	598,400	610,200	607,200	602,200	579,800	563,800
31	563,300	------	541,800	542,700	------	569,900	------	617,800	------	597,400	576,000	------
MAX	569,200	561,100	552,800	548,800	555,200	569,900	601,200	621,600	621,200	613,400	607,800	575,800
MIN	554,800	551,200	539,800	536,200	533,000	539,100	567,300	596,800	599,000	589,300	576,000	559,800
( )	-11,000	-9,800	-11,700	+900	+8,500	+18,700	+28,500	+19,400	-10,600	-9,800	-21,400	-12,200

CAL YR 1971 MAX 619,800 MIN 532,100 -4,500
WTR YR 1972 MAX 621,600 MIN 533,000 -10,500

Change in contents, in acre-feet.

09427500 LAKE HAVASU NEAR PARKER DAM, ARIZ.-CALIF.--Continued

ELEVATION, IN FEET, AT 2400, WATER YEAR OCTOBER 1971 TO SEPTEMBER 1972

DAY	OCT	NOV	DEC	JAN	FEB	MAR	APR	MAY	JUN	JUL	AUG	SEP
1	447.97	447.54	447.05	446.40	446.44	447.01	447.97	449.41	450.63	450.07	449.49	448.32
2	447.84	447.36	447.10	446.34	446.26	446.99	448.04	449.46	450.17	450.10	449.48	448.23
3	447.67	447.29	447.04	446.40	446.10	446.76	447.87	449.47	449.85	449.89	449.43	448.24
4	447.65	447.30	447.04	446.19	446.00	446.76	448.02	449.55	449.90	450.10	449.46	448.10
5	447.60	447.34	446.88	446.18	446.11	446.82	448.15	449.68	449.80	450.14	449.60	448.05
6	447.71	447.29	446.79	446.28	446.24	446.50	448.35	449.88	449.92	450.24	449.80	448.02
7	447.77	447.26	446.86	446.40	446.28	446.48	448.34	450.09	450.20	450.11	449.68	447.95
8	447.76	447.30	446.74	446.49	446.32	446.52	448.38	450.02	450.43	449.90	449.83	447.90
9	447.74	447.19	446.60	446.48	446.40	446.70	448.39	450.16	450.08	449.80	449.96	447.87
10	447.55	447.33	446.52	446.40	446.62	446.80	448.17	450.32	450.06	449.30	449.73	447.84
11	447.42	447.38	446.54	446.61	446.74	446.83	448.29	450.39	450.05	449.05	449.46	447.50
12	447.33	447.42	446.61	446.75	446.75	446.81	448.60	450.26	450.02	449.07	449.44	447.47
13	447.30	447.31	446.70	446.84	446.80	446.49	448.96	450.26	449.94	449.03	449.54	447.78
14	447.36	447.28	446.54	446.88	446.67	446.58	449.05	450.22	449.93	449.05	449.43	447.97
15	447.21	447.08	446.54	446.82	446.69	446.85	448.94	450.14	449.90	449.18	449.45	448.00
16	447.26	447.01	446.38	446.88	446.67	447.12	448.70	450.15	449.84	449.41	449.45	448.02
17	447.36	447.09	446.44	446.84	446.84	447.05	448.30	450.08	449.92	449.30	449.37	447.99
18	447.51	447.16	446.58	446.79	446.81	446.87	448.39	450.12	449.90	449.38	449.22	447.87
19	447.62	447.19	446.68	446.75	446.80	446.79	448.49	450.25	449.56	449.30	449.07	447.94
20	447.64	447.19	446.65	446.73	446.87	446.34	448.67	450.43	449.62	449.36	448.95	447.71
21	447.64	447.30	446.83	446.68	446.85	446.40	448.78	450.50	449.55	449.38	448.81	447.57
22	447.46	447.24	447.00	446.59	446.92	446.74	448.98	450.54	449.52	449.49	448.71	447.61
23	447.53	447.31	447.05	446.54	447.10	447.20	449.17	450.64	449.60	449.59	448.51	447.71
24	447.51	447.39	446.90	446.49	447.23	447.32	449.09	450.65	449.79	449.54	448.38	447.79
25	447.52	447.40	446.86	446.42	447.15	447.45	449.32	450.39	449.84	449.73	448.44	447.55
26	447.72	447.37	446.66	446.35	447.15	447.64	449.44	450.19	449.69	449.87	448.52	447.47
27	447.66	447.34	446.47	446.44	447.11	447.41	449.57	450.32	449.76	449.95	448.61	447.47
28	447.66	447.32	446.56	446.54	446.99	447.44	449.63	450.26	449.76	449.82	448.69	447.58
29	447.63	447.24	446.53	446.71	447.01	447.68	449.55	450.07	449.78	449.72	448.72	447.69
30	447.66	447.14	446.59	446.68	------	447.97	449.49	450.08	449.93	449.68	448.53	447.69
31	447.66	------	446.49	446.54	------	448.01	------	450.46	------	449.44	448.33	------
MEAN	447.58	447.28	446.72	446.56	446.69	446.98	448.70	450.14	449.90	449.61	449.16	447.83
MAX	447.97	447.54	447.10	446.88	447.23	448.01	449.63	450.65	450.63	450.24	449.96	448.32
MIN	447.21	447.01	446.38	446.18	446.00	446.34	447.87	449.41	449.52	449.03	448.33	447.47

CAL YR 1971 MAX 450.56 MIN 445.95
WTR YR 1972 MAX 450.65 MIN 446.00

09427520 COLORADO RIVER BELOW PARKER DAM, CALIF.

LOCATION.--Lat 34°17'44", long 114°08'22", in NW¼NW¼ sec.3, T.2 N., R.27 E., San Bernardino meridian, in California, San Bernardino County, on north end of powerplant at Parker Dam, 13 miles northeast of Parker, Ariz., and 14 miles upstream from Headgate Rock Dam.

DRAINAGE AREA.--178,800 sq mi, approximately.

PERIOD OF RECORD.--February to September 1934 (gage heights and fragmentary discharge records), October 1934 to current year. Prior to October 1937, published as "near Parker, Ariz."

GAGE.--Water-stage recorder. Datum of gage is 300.54 ft above mean sea level. Prior to Oct. 1, 1967, water-stage recorder at site 3.8 miles downstream at datum 346.23 ft above mean sea level.

AVERAGE DISCHARGE (unadjusted).--38 years, 12,330 cfs (8,933,000 acre-ft per year).

EXTREMES.--Current year: Maximum discharge, 19,800 cfs Aug. 4 (gage height, 72.42 ft); minimum daily, 2,610 cfs Dec. 22.

Period of record: Maximum discharge, 42,400 cfs Feb. 8, 1937; no flow at Parker Dam for parts of several days in 1942 when gates in dam were closed; minimum daily discharge, 1,440 cfs Feb. 15, 1935.

An unregulated discharge of probably less than 1,350 cfs occurred Aug. 18, 1934 (lowest unregulated discharge since 1917 and probably since a much earlier date).

REMARKS.--Records excellent. Flow regulated by Lake Mead since Feb. 1, 1935, Lake Mohave since Jan. 17, 1950, and by Lake Havasu since July 1, 1938. Many diversions above station. For record of diversion to Colorado River aqueduct and return flows, see record for Colorado River aqueduct near Parker Dam (sta 09424150). Records of chemical analyses and water temperatures for the current year are published in Part 2 of this report.

REVISIONS (WATER YEARS).--WSP 1313: 1941(M).

DISCHARGE, IN CUBIC FEET PER SECOND, WATER YEAR OCTOBER 1971 TO SEPTEMBER 1972

DAY	OCT	NOV	DEC	JAN	FEB	MAR	APR	MAY	JUN	JUL	AUG	SEP
1	6,600	5,160	4,270	6,240	7,010	9,190	13,900	11,600	8,760	14,400	14,200	9,120
2	6,150	5,600	3,620	5,850	6,930	8,600	13,900	11,500	10,600	14,900	14,200	9,210
3	6,390	5,640	4,490	6,210	6,110	11,300	13,800	12,400	10,900	14,600	13,300	9,450
4	5,640	5,520	4,790	6,800	7,630	11,500	13,100	11,600	10,800	13,700	13,400	9,290
5	6,360	5,670	5,210	6,840	7,490	10,800	12,800	12,300	11,600	12,800	13,200	9,690
6	6,140	5,990	6,600	6,460	7,370	12,000	11,800	12,600	11,000	13,400	12,700	9,890
7	6,240	6,250	6,370	6,400	7,340	11,900	14,600	12,600	8,900	13,500	13,100	9,980
8	7,270	6,540	6,890	5,800	7,550	12,300	15,000	12,300	8,140	14,000	12,700	11,000
9	7,470	6,060	6,740	6,300	8,000	11,100	14,900	11,700	11,200	14,100	11,400	11,200
10	8,700	5,060	7,260	6,830	7,400	12,200	14,700	10,800	10,800	15,100	11,100	11,200
11	8,670	4,750	7,250	5,170	8,240	12,600	13,600	10,000	10,900	14,700	12,600	11,200
12	8,650	4,930	6,800	4,300	8,890	12,800	12,600	12,000	10,800	13,700	12,500	10,600
13	7,640	5,800	6,830	3,460	8,880	12,800	12,000	12,200	10,900	13,700	12,600	9,380
14	6,640	5,730	6,710	4,720	9,880	12,400	11,600	12,700	10,600	14,800	12,300	8,950
15	8,690	6,650	6,340	4,870	9,220	11,000	11,600	12,100	9,980	15,200	11,700	10,200
16	8,200	6,510	6,130	4,780	8,750	10,100	12,600	11,800	12,400	14,600	11,500	10,400
17	7,380	5,910	5,770	5,460	7,340	12,900	13,600	11,400	12,800	14,400	11,000	10,900
18	6,300	5,330	6,100	5,330	8,890	13,300	12,800	10,500	12,800	13,500	11,500	10,100
19	5,190	6,090	6,150	4,660	8,910	13,300	12,400	11,100	13,100	13,300	11,400	9,210
20	4,490	5,940	6,420	4,440	8,410	13,700	11,600	10,900	12,500	13,200	11,200	8,900
21	5,010	5,540	4,610	5,590	9,290	12,600	13,200	11,400	12,400	15,000	11,500	8,540
22	7,070	5,310	2,610	5,720	9,380	11,900	13,800	10,600	13,100	15,100	11,500	9,330
23	5,910	4,260	3,390	5,920	8,680	11,100	13,700	10,100	12,400	15,100	12,400	9,650
24	7,380	3,240	5,050	5,710	8,250	13,800	13,100	9,370	12,700	13,800	11,600	9,550
25	6,630	3,170	5,560	5,660	9,010	13,600	12,100	9,470	12,700	13,800	11,700	9,720
26	4,550	3,840	6,570	5,490	9,150	13,600	11,500	11,900	12,500	13,600	11,200	8,930
27	4,760	3,770	6,600	4,920	9,420	13,000	9,940	12,000	11,900	12,700	10,200	8,450
28	5,240	3,900	6,420	5,540	9,270	13,500	11,500	11,700	12,700	14,600	8,660	7,540
29	4,910	3,780	5,530	5,940	9,320	13,000	12,400	11,600	13,600	15,000	7,590	8,330
30	4,980	4,020	4,950	6,020	------	11,500	12,300	10,700	13,800	15,300	7,990	9,260
31	4,970	------	7,190	7,010	------	13,300	------	9,780	------	15,600	9,100	------
TOTAL	200,220	155,960	179,220	174,440	242,010	376,690	386,440	352,720	347,280	441,200	361,040	289,170
MEAN	6,459	5,199	5,781	5,627	8,345	12,150	12,880	11,380	11,580	14,230	11,650	9,639
MAX	8,700	6,650	7,260	7,010	9,880	13,800	15,000	12,700	13,800	15,600	14,200	11,200
MIN	4,490	3,170	2,610	3,460	6,110	8,600	9,940	9,370	8,140	12,700	7,590	7,540
AC-FT	397,100	309,300	355,500	346,000	480,000	747,200	766,500	699,600	688,800	875,100	716,100	573,600

CAL YR 1971 TOTAL 3,484,450 MEAN 9,546 MAX 15,900 MIN 2,610 AC-FT 6,911,000
WTR YR 1972 TOTAL 3,506,390 MEAN 9,580 MAX 15,600 MIN 2,610 AC-FT 6,955,000

09429000 PALO VERDE CANAL NEAR BLYTHE, CALIF.

LOCATION (revised).--Lat 33°43'55", long 114°30'40", in NW¼NE¼ sec.19, T.5 S., R.24 E., San Bernardino meridian, Riverside County, at canal intake structure on west side of Palo Verde Diversion Dam, 10 miles northeast of Blythe, and 44 miles downstream from Headgate Rock Dam.

PERIOD OF RECORD.--January 1922 to December 1923, January 1925 to current year (prior to October 1950, monthly discharge only).

GAGE.--Recording gages above and below intakes to record head. Since May 18, 1964, recorder to show gate openings. Datum of gage is: Forebay gage, at mean sea level; tailrace gage, 274.13 ft above mean sea level. Aug. 7, 1950, to Nov. 30, 1952, water-stage recorder on tailrace and auxiliary recorder 0.5 mile downstream and Dec. 1, 1952, to Oct. 28, 1957, recording gage above and below former intake structure 0.2 mile upstream, at different datums.

AVERAGE DISCHARGE.--22 years (1950-72), 1,194 cfs (865,100 acre-ft per year).

EXTREMES.--1950 to current year: Maximum daily discharge, 2,180 cfs Aug. 7, 1962; no flow at times in several years.

REMARKS.--Records excellent. Daily diversions computed on basis of head on intake gates and gate openings. Records published herein represent flow diverted from Colorado River for irrigation of 91,443 acres during the 1971 calendar year. Return flows to Colorado River are measured by 11 wasteways and drains extending throughout the project; 5 of these are equipped with water-stage recorder and Parshall flume, 3 are equipped with Sparling flowmeters. Return flows have not been subtracted; combined monthly return flows are given in table below.

REVISIONS (WATER YEARS).--WSP 1213: 1946-48.

DISCHARGE, IN CUBIC FEET PER SECOND, WATER YEAR OCTOBER 1971 TO SEPTEMBER 1972

DAY	OCT	NOV	DEC	JAN	FEB	MAR	APR	MAY	JUN	JUL	AUG	SEP
1	634	850	797	840	764	1,130	1,590	1,690	1,390	1,920	1,840	1,290
2	679	912	695	166	844	1,140	1,440	1,780	1,470	1,870	1,930	1,320
3	658	961	766	0	860	1,110	1,600	1,840	1,450	1,890	1,920	1,270
4	742	1,000	773	0	905	1,100	1,650	1,870	1,440	1,840	1,810	1,340
5	809	948	679	0	882	1,010	1,670	1,830	1,510	1,750	1,670	1,420
6	931	883	807	0	808	1,160	1,620	1,810	1,490	1,840	1,490	1,480
7	1,130	780	797	0	928	1,190	1,750	1,610	1,300	1,760	1,620	1,480
8	1,140	869	942	0	797	1,190	1,730	1,600	1,200	1,670	1,590	1,620
9	1,030	828	1,090	0	885	1,160	1,590	1,570	1,350	1,660	1,570	1,540
10	904	860	1,110	0	922	1,130	1,540	1,660	1,370	1,810	1,650	1,410
11	957	957	1,050	0	928	1,110	1,510	1,650	1,270	1,870	1,610	1,390
12	957	945	828	0	945	966	1,490	1,690	1,440	1,940	1,480	1,370
13	1,010	923	820	0	911	1,020	1,520	1,670	1,490	2,010	1,370	1,280
14	1,030	953	852	0	1,090	1,140	1,450	1,580	1,510	1,950	1,520	1,310
15	1,030	1,150	924	775	1,070	1,140	1,390	1,560	1,540	2,040	1,490	1,250
16	996	1,090	924	797	1,170	1,270	1,300	1,600	1,600	2,010	1,350	1,230
17	974	1,000	972	1,290	1,270	1,290	1,460	1,530	1,590	1,950	1,360	1,220
18	964	1,000	902	1,270	1,270	1,320	1,570	1,490	1,440	1,870	1,260	1,380
19	933	974	832	1,350	1,270	1,400	1,560	1,580	1,560	1,880	1,320	1,340
20	878	1,020	930	1,370	1,180	1,580	1,660	1,510	1,580	1,850	1,280	1,390
21	852	934	1,010	1,350	1,300	1,530	1,660	1,330	1,740	1,850	1,360	1,430
22	904	1,020	968	1,230	1,260	1,520	1,670	1,390	1,810	1,900	1,410	1,310
23	846	1,010	822	1,090	1,260	1,490	1,640	1,340	1,830	1,790	1,530	1,220
24	766	952	565	1,200	1,250	1,540	1,810	1,460	1,600	1,930	1,650	1,130
25	810	819	462	1,130	1,160	1,360	1,760	1,470	1,480	1,830	1,680	1,220
26	754	846	504	1,070	1,060	1,390	1,810	1,460	1,650	1,740	1,600	1,210
27	782	778	804	1,020	919	1,570	1,860	1,390	1,640	1,670	1,510	1,220
28	834	754	983	1,080	1,080	1,590	1,760	1,270	1,680	1,750	1,460	1,090
29	856	768	1,070	915	1,130	1,590	1,600	1,410	1,780	1,590	1,510	1,080
30	796	807	1,330	802	------	1,570	1,540	1,510	1,910	1,540	1,300	1,050
31	739	------	1,250	846	------	1,590	------	1,530	------	1,760	1,300	------
TOTAL	27,325	27,591	27,258	19,591	30,118	40,296	48,200	48,680	46,110	56,730	47,440	39,290
MEAN	881	920	879	632	1,039	1,300	1,607	1,570	1,537	1,830	1,530	1,310
MAX	1,140	1,150	1,330	1,370	1,300	1,590	1,860	1,870	1,910	2,040	1,930	1,620
MIN	634	754	462	0	764	966	1,300	1,270	1,200	1,540	1,260	1,050
AC-FT	54,200	54,730	54,070	38,860	59,740	79,930	95,600	96,560	91,460	112,500	94,100	77,930
(a)	36,420	33,950	34,190	28,410	30,420	34,880	37,560	41,620	38,340	39,920	41,210	40,780

CAL YR 1971 TOTAL 451,990 MEAN 1,238 MAX 2,050 MIN 0 AC-FT 896,500 a 437,900
WTR YR 1972 TOTAL 458,629 MEAN 1,253 MAX 2,040 MIN 0 AC-FT 909,700 a 437,700

a Return flows, in acre-feet, to Colorado River.

09429010 COLORADO RIVER AT PALO VERDE DAM, ARIZ.-CALIF.

LOCATION.--Lat 33°43'55", long 114°30'40", in NW¼NE¼ sec.19, T.5 S., R.24 E., San Bernardino meridian, in California, Riverside County, on west side of Palo Verde Diversion Dam, 10 miles northeast of Blythe, Calif., and 44 miles downstream from Headgate Rock Dam.

DRAINAGE AREA.--182,200 sq mi, approximately.

PERIOD OF RECORD.--April 1969 to current year. If records (available in files of Tucson district office) for Colorado River Indian Reservation drains entering below Palo Verde Dam are added to records for this station, records equivalent to those published 1956-69 as Colorado River below Palo Verde Dam can be obtained.

GAGE.--Water-stage recorders above and below dam to record head and water-stage recorder to record gate opening. Datum of gages is at mean sea level.

EXTREMES.--Maximum daily discharge, 11,800 cfs July 11; minimum daily, 1,880 cfs Dec. 23.
Period of record: Maximum daily discnarge, 13,200 cfs Apr. 8, 1970; minimum daily, 1,360 cfs Nov. 19, 20, 1969.

REMARKS.--Records excellent. Record does not include diversion to Palo Verde Canal. (See elsewhere in this report.) Many diversions above station for irrigation, municipal, and industrial uses. Flow regulated by Lake Mead, Lake Mohave, and Lake Havasu.

DISCHARGE, IN CUBIC FEET PER SECOND, WATER YEAR OCTOBER 1971 TO SEPTEMBER 1972

DAY	OCT	NOV	DEC	JAN	FEB	MAR	APR	MAY	JUN	JUL	AUG	SEP
1	4,180	3,650	3,160	5,560	5,430	7,010	10,300	8,380	7,450	10,400	11,000	6,450
2	5,580	3,810	3,140	5,850	5,390	6,950	10,800	8,130	6,140	11,500	10,500	6,900
3	5,390	4,120	2,810	5,320	5,000	6,440	11,000	8,220	7,860	11,000	10,600	7,100
4	4,990	4,120	3,510	5,290	4,650	8,620	11,000	8,880	8,100	10,300	9,820	6,450
5	4,570	4,140	3,820	5,870	5,690	9,120	10,100	8,400	8,270	10,100	10,300	6,920
6	5,070	4,290	4,120	6,400	5,660	8,470	9,960	8,900	8,870	9,750	10,300	7,190
7	4,620	4,650	5,200	5,800	5,520	10,300	9,600	9,430	8,650	9,730	9,970	7,420
8	4,850	4,960	4,970	6,070	5,710	8,770	11,500	9,550	7,090	9,870	10,000	7,620
9	5,630	5,190	5,370	6,020	5,680	9,680	11,700	9,040	6,330	10,500	9,520	8,640
10	5,990	4,810	5,110	6,140	5,920	8,790	11,600	8,390	8,590	10,600	8,650	8,810
11	6,930	3,940	5,710	6,500	5,660	10,200	11,400	7,610	8,530	11,800	8,420	8,820
12	6,960	3,560	5,960	5,020	6,370	10,200	10,400	7,350	8,670	10,200	9,570	8,650
13	6,860	3,720	5,600	4,350	7,030	10,500	9,750	8,570	8,700	9,760	9,770	7,970
14	6,050	4,410	6,090	4,010	7,660	10,300	9,230	9,630	8,050	9,760	9,790	7,190
15	5,200	4,290	5,420	3,690	7,650	9,790	9,140	9,260	7,890	11,500	9,450	7,090
16	6,810	5,020	5,140	4,360	6,040	8,380	9,250	9,070	7,560	10,800	8,990	8,140
17	6,680	5,110	4,930	3,790	6,370	8,070	10,200	8,800	9,510	10,500	8,530	8,410
18	6,140	4,620	4,400	4,330	5,390	10,300	10,300	8,340	10,300	10,000	8,630	8,680
19	4,980	4,190	4,970	4,290	6,690	10,500	9,310	7,670	9,830	9,620	8,710	7,960
20	4,210	4,740	4,930	3,560	6,770	10,600	9,590	8,330	10,300	9,310	9,750	7,150
21	3,570	4,760	5,140	3,390	6,260	10,600	9,200	8,260	9,360	9,340	9,250	6,780
22	3,830	4,290	3,180	4,460	6,990	9,760	10,200	8,470	9,520	10,600	8,590	6,720
23	5,440	4,220	1,880	4,420	7,120	8,840	10,900	7,750	9,730	11,000	8,840	7,480
24	4,560	3,060	2,940	4,750	6,440	8,700	10,700	7,440	9,460	10,700	9,420	7,770
25	5,720	2,590	4,210	4,640	6,370	10,600	9,650	6,720	9,880	9,140	8,680	7,710
26	5,320	2,610	4,720	4,710	6,990	10,500	8,830	6,580	9,700	9,370	9,160	7,780
27	3,500	3,090	5,240	4,590	7,040	10,200	8,330	8,860	9,500	9,220	9,010	6,940
28	3,500	2,950	5,060	4,130	7,340	10,900	7,420	9,320	8,990	8,920	7,740	6,770
29	3,840	3,100	4,820	4,520	7,250	10,200	8,560	8,670	9,840	10,400	6,210	6,250
30	3,680	2,850	3,800	4,750	------	8,700	9,000	8,330	10,300	10,800	6,380	6,860
31	3,850	------	3,310	4,670	------	8,620	------	8,130	------	11,200	6,090	------
TOTAL	158,500	120,860	138,660	151,250	182,080	290,610	298,920	260,480	262,970	317,690	281,640	224,620
MEAN	5,113	4,029	4,473	4,879	6,279	9,375	9,964	8,403	8,766	10,250	9,085	7,487
MAX	6,960	5,190	6,090	6,500	7,660	10,900	11,700	9,630	10,300	11,800	11,000	8,820
MIN	3,500	2,590	1,880	3,390	4,650	6,440	7,420	6,580	6,140	8,920	6,090	6,250
AC-FT	314,400	239,700	275,000	300,000	361,200	576,400	592,900	516,700	521,600	630,100	558,600	445,500

CAL YR 1971 TOTAL 2,656,450 MEAN 7,278 MAX 12,300 MIN 1,880 AC-FT 5,269,000
WTR YR 1972 TOTAL 2,688,280 MEAN 7,345 MAX 11,800 MIN 1,880 AC-FT 5,332,000

09429490 COLORADO RIVER ABOVE IMPERIAL DAM, ARIZ.-CALIF.

LOCATION.--Lat 32°52'59", long 114°27'55", at Imperial Dam. The Arizona end of the dam is in SW¼NW¼ sec.30, T.6 S., R.21 W., Gila and Salt River meridian; the California end is in NW¼SW¼ sec.9, T.15 S., R.24 E., San Bernardino meridian. Imperial Dam is 5 miles upstream from Laguna Dam, 15 miles northeast of Yuma, Ariz., 90 miles downstream from Palo Verde Dam, and 147 miles downstream from Parker Dam.

DRAINAGE AREA.--184,600 sq mi, approximately.

PERIOD OF RECORD.--1903-34 (yearly discharge only, published in WSP 1313), July 1934 to current year (monthly discharge only since October 1942). Prior to October 1942, published as "near Picacho, Calif." October 1942 to September 1971 published as "at Imperial Dam" (monthly discharge shown as "flow reaching Imperial Dam", listed as supplement to "flow passing Imperial Dam").

GAGE.--None. This record is synthesized from records of several other stations (see REMARKS). July 13, 1934, to Sept. 30, 1942, water-stage recorder at site 14.5 miles upstream at datum 167.38 ft above mean sea level.

AVERAGE DISCHARGE.--38 years (1934-72), 11,410 cfs (8,267,000 acre-ft per year).

EXTREMES.--1934 to current year: Maximum discharge, 40,800 cfs Sept. 5, 1939; minimum, 538 cfs Aug. 3, 1934; minimum daily since regulation of Hoover Dam began, 1,450 cfs Feb. 17, 1935.

REMARKS.--Records show flow of Colorado River reaching Imperial Dam and are based on combined monthly total flow of Colorado River below Imperial Dam (sta 09429500), All-American Canal near Imperial Dam (sta 09523000), Gila Gravity Main Canal at Imperial Dam (sta 09522500), and diversions to Mittry Lake. Records for 1903-34 and for October 1942 to September 1960 were computed as combined flow of Colorado River at Yuma (sta 09521000) and the canals diverting at Imperial and Laguna Dams, less the flow of Gila River near Dome (sta 09520500); for some of these periods drainage and waste return flows and channel losses between the gaging stations and Imperial Dam were considered, and for other periods they were neglected. Records for July 1934 to September 1942 show daily discharge of Colorado River at gaging station near Picacho, Calif. Natural flow of Colorado River at this point affected by transmountain diversions, storage reservoirs, power developments, ground-water withdrawals, and diversions for irrigation, municipal, and industrial uses, and return flows from irrigated areas. Diversions to Mittry Lake, which began June 23, 1970, are included in river records in table below. Additional regulation, beginning Jan. 31, 1966, to equalize supplies for downstream water users, is provided by pumped storage in reservoir on Senator Wash, about 2 miles upstream from Imperial Dam. Monthend contents of Senator Wash Reservoir (capacity, 13,840 acre-ft) are given in table below.

COOPERATION.--Records of Sparling meter readings of diversion to Mittry Lake and contents of Senator Wash Reservoir furnished by Bureau of Reclamation.

COLORADO RIVER ABOVE IMPERIAL DAM, DIVERSIONS TO MITTRY LAKE, AND MONTHEND CONTENTS OF SENATOR WASH RESERVOIR, WATER YEAR OCTOBER 1971 TO SEPTEMBER 1972

Month	Discharge of Colorado River		Diversions to Mittry Lake (acre-feet)a	Monthend contents, Senator Wash Reservoir (acre-feet)
	Mean (cubic feet per second)	Runoff in acre-feet		
October	6,340	389,800	734	7,590
November	5,041	300,000	239	6,900
December	5,427	333,700	410	4,560
CAL YR 1971	8,051	5,829,000	5,850	-
January	5,546	341,000	547	6,980
February	6,770	389,400	549	8,830
March	10,050	618,200	600	6,470
April	10,830	644,300	396	5,020
May	9,118	560,700	555	7,710
June	9,401	559,400	510	3,920
July	10,850	667,100	444	6,090
August	10,290	632,500	213	5,980
September	8,133	483,900	384	6,200
WTR YR 1972	8,155	5,920,000	5,580	-

a Included in first two columns of table.

NOTE.--Discharge of Colorado River, in first two columns of table above, is combined discharge of Colorado River below Imperial Dam (sta 09429500) and diversions to All-American Canal, Gila Gravity Main Canal, and Mittry Lake.

09429500 COLORADO RIVER BELOW IMPERIAL DAM, ARIZ.-CALIF.
(Formerly published as Colorado River at Imperial Dam)

LOCATION.--Forebay gage: Lat 32°52'59" (revised), long 114°27'57", in NW¼SW¼ sec.9, T.15 S., R.24 E., San Bernardino meridian, in California, Imperial County, near All-American Canal headworks at west end of Imperial Dam, 5 miles upstream from Laguna Dam, 15 miles northeast of Yuma, 90 miles downstream from Palo Verde Dam, and 147 miles downstream from Parker Dam.

DRAINAGE AREA.--184,600 sq mi, approximately.

PERIOD OF RECORD.--October 1960 to current year. Prior to October 1971, published as "at Imperial Dam." Records of flow reaching Imperial Dam, formerly published with this station, are now published separately as sta 09429490, Colorado River above Imperial Dam.

GAGE.--Water-stage recorder in forebay, 12 calibrated gates on California sluiceway, 8 calibrated gates on Gila sluiceway, and calibrated manometer on each discharge pipe from desilting basin. Datum of forebay gage is 162.00 ft above mean sea level (Bureau of Reclamation bench mark).

EXTREMES.--Current year: Maximum daily discharge, 1,550 cfs Oct. 1; minimum daily, 224 cfs Jan. 2-12, Jan. 15 to Feb. 14.
Period of record: Maximum daily discharge, 5,040 cfs Mar. 3, 1970; minimum daily, 27 cfs Dec. 15-18, 1969.

REMARKS.--Records good. Records of daily discharge show flow of Colorado River passing Imperial Dam, and include water released to river through California and Gila sluiceways, sludge from desilting basins returned to river, and leakage through dam. Records of flow reaching Imperial Dam, formerly published as supplement to this station, are now published separately (see sta 09429490). Flow of Colorado River regulated by many reservoirs, principally Lake Mead, since 1935. Many diversions from Colorado River and tributaries above station. Diversion to Mittry Lake and monthend contents of Senator Wash Reservoir also are now published with sta 09429490.

COOPERATION.--Records of gate openings furnished by Bureau of Reclamation. Records of sludge return flow from desilting basins furnished by Imperial Irrigation District.

DISCHARGE, IN CUBIC FEET PER SECOND, WATER YEAR OCTOBER 1971 TO SEPTEMBER 1972

DAY	OCT	NOV	DEC	JAN	FEB	MAR	APR	MAY	JUN	JUL	AUG	SEP
1	1,550	273	253	225	224	345	334	329	609	367	337	430
2	292	273	252	224	224	264	334	329	609	367	337	336
3	273	273	250	224	224	264	613	329	231	367	337	336
4	273	273	249	224	224	364	586	329	231	367	432	236
5	273	273	238	224	224	364	334	329	231	559	432	236
6	273	273	237	224	224	264	334	329	231	367	337	236
7	273	263	236	224	224	264	335	329	231	357	527	236
8	273	263	236	224	224	264	335	230	231	357	520	236
9	273	263	236	224	224	264	335	611	231	357	337	236
10	273	263	236	224	224	364	335	230	231	357	337	236
11	273	263	236	224	224	364	336	230	231	357	430	236
12	273	263	236	224	224	364	419	230	341	347	337	236
13	273	285	236	565	224	364	326	230	341	347	337	236
14	273	306	236	402	224	364	599	230	542	347	337	236
15	273	337	236	224	255	540	326	330	350	347	337	426
16	273	424	236	224	244	627	326	230	350	337	337	331
17	273	378	236	224	337	364	327	230	360	621	337	236
18	273	253	236	224	354	364	327	231	360	526	337	236
19	505	253	235	224	264	364	327	422	360	337	337	236
20	273	253	235	224	264	364	327	231	370	337	337	427
21	273	243	235	224	364	364	327	231	370	337	337	427
22	273	243	235	224	358	551	327	231	370	337	337	236
23	273	243	235	224	264	442	328	326	370	337	337	236
24	273	243	235	224	264	334	328	231	368	337	337	236
25	273	288	235	224	264	334	599	231	368	523	337	236
26	273	565	235	224	264	334	420	231	646	432	337	236
27	354	255	235	224	264	334	328	232	461	337	337	331
28	505	255	235	224	432	334	328	332	368	337	337	236
29	273	255	235	224	264	334	328	232	368	337	431	425
30	273	255	235	224	------	334	328	425	368	337	337	236
31	273	------	235	224	------	334	------	232	------	337	337	------
TOTAL	10,304	8,550	7,366	7,464	7,592	11,129	11,156	8,902	10,728	11,713	11,197	8,425
MEAN	332	285	238	241	262	359	372	287	358	378	361	281
MAX	1,550	565	253	565	432	627	613	611	646	621	527	430
MIN	273	243	235	224	224	264	326	230	231	337	337	236
AC-FT	20,440	16,960	14,610	14,800	15,060	22,070	22,130	17,660	21,280	23,230	22,210	16,710

CAL YR 1971 TOTAL 117,567 MEAN 322 MAX 1,970 MIN 223 AC-FT 233,200
WTR YR 1972 TOTAL 114,526 MEAN 313 MAX 1,550 MIN 224 AC-FT 227,200

09429600 COLORADO RIVER BELOW LAGUNA DAM, ARIZ.-CALIF.

LOCATION.--Lat 32°48'44", long 114°30'51", in SE¼NE¼ sec.35, T.15 S., R.23 E., San Bernardino meridian, in California, Imperial County, on right bank 1.4 miles downstream from Laguna Dam, 2.8 miles northeast of Bard, Calif., and 10 miles northeast of Yuma, Ariz.

DRAINAGE AREA.--184,700 sq mi, approximately.

PERIOD OF RECORD.--December 1971 to September 1972.

GAGE.--Water-stage recorder. Datum of gage is 120.84 ft above mean sea level (Bureau of Reclamation bench mark).

EXTREMES.--Maximum discharge during period, 876 cfs June 30, July 1 (gage height, 4.83 ft); minimum daily, 211 cfs Feb. 29.

REMARKS.--Records excellent. Natural flow of Colorado River at this point is affected by transmountain diversions, storage reservoirs, power developments, ground-water withdrawals, diversions for irrigation, municipal and industrial uses, and return flows from irrigated areas. Flow past station consists mainly of water released through Imperial Dam, sludge from the desilting basins at Imperial Dam, seepage through Imperial Dam, and seepage from the All-American Canal and the Gila Gravity Main Canal.

DISCHARGE, IN CUBIC FEET PER SECOND, DECEMBER 1971 TO SEPTEMBER 1972

DAY	OCT	NOV	DEC	JAN	FEB	MAR	APR	MAY	JUN	JUL	AUG	SEP
1			-	254	265	232	381	616	465	729	380	344
2			-	389	268	223	378	471	369	395	383	335
3			-	253	270	424	365	389	273	383	362	335
4			-	296	268	543	369	387	432	380	346	343
5			-	306	268	414	362	411	560	364	354	341
6			-	312	267	355	355	412	491	354	358	289
7			-	279	265	277	490	389	317	350	355	278
8			-	271	265	263	604	310	291	346	361	270
9			-	269	270	259	436	264	284	345	354	262
10			-	269	268	333	363	284	277	348	542	261
11			-	268	266	341	362	292	273	347	686	257
12			-	269	263	332	378	254	370	343	559	255
13			-	235	274	333	411	226	372	343	407	256
14			-	222	279	335	364	223	369	346	384	257
15			-	260	297	336	361	231	373	348	376	255
16			282	250	282	331	342	241	362	347	375	239
17			284	232	374	273	340	246	490	357	378	268
18			285	295	254	291	489	249	439	362	375	341
19			281	304	269	300	707	255	383	342	375	331
20			280	304	268	392	476	266	376	448	377	340
21			280	314	285	576	379	268	372	676	379	350
22			280	322	409	558	374	266	373	595	384	350
23			279	312	274	427	369	240	371	417	383	337
24			272	297	244	395	365	217	370	374	379	344
25			224	304	280	464	359	236	366	351	375	319
26			246	299	273	466	332	246	346	339	375	288
27			247	282	269	463	317	377	344	341	375	275
28			255	275	244	394	315	555	338	369	375	264
29			255	268	211	384	325	522	315	449	371	238
30			257	300	------	381	434	483	428	428	374	222
31		------	254	264	------	382	------	466	------	414	370	------
TOTAL			-	8,774	7,989	11,477	11,902	10,292	11,189	12,330	12,227	8,844
MEAN			-	283	275	370	397	332	373	398	394	295
MAX			-	389	409	576	707	616	560	729	686	350
MIN			-	222	211	223	315	217	273	339	346	222
AC-FT			-	17,400	15,850	22,760	23,610	20,410	22,190	24,460	24,250	17,540

09521100 COLORADO RIVER BELOW YUMA MAIN CANAL WASTEWAY, AT YUMA, ARIZ.

LOCATION.--Lat 32°43'54", long 114°37'55", in SW¼SW¼ sec.26, T.16 S., R.22 E., San Bernardino meridian, in California, Imperial County, on right bank 1,000 ft downstream from Yuma Main Canal wasteway, 0.6 mile downstream from former gaging station on Colorado River at Yuma, 1.1 miles northwest of post office in Yuma, 5.2 miles downstream from Gila River, and 6.4 miles upstream from northerly international boundary.

DRAINAGE AREA.--242,900 sq mi, approximately, including all closed basins entirely within the drainage boundary.

PERIOD OF RECORD.--October 1963 to current year. If records for Yuma Main Canal wasteway at Yuma (sta 09525000) and Reservation Main Drain No. 4 (sta 09530000) are subtracted from records at this station, records equivalent to those published 1902-64 as "Colorado River at Yuma" (sta 09521000) can be obtained.

GAGE.--Water-stage recorder. Datum of gage is 101.99 ft above mean sea level.

AVERAGE DISCHARGE.--9 years, 851 cfs (616,500 acre-ft per year).

EXTREMES.--Current year: Maximum discharge, 2,070 cfs Oct. 1 (gage height, 12.28 ft); minimum daily, 442 cfs June 10.

Period of record: Maximum discharge, 5,040 cfs Mar. 3, 1970 (gage height, 15.05 ft); minimum daily, 260 cfs Jan. 17, 1970.

Maximum gage height since at least 1878, 34.0 ft Jan. 22, 1916 (discharge, 250,000 cfs), at former gaging station at Yuma.

REMARKS.--Records excellent. Natural flow of stream affected by transmountain diversions, storage reservoirs, power developments, ground-water withdrawals and diversions for irrigation, municipal and industrial uses, and return flows from irrigated areas.

DISCHARGE, IN CUBIC FEET PER SECOND, WATER YEAR OCTOBER 1971 TO SEPTEMBER 1972

DAY	OCT	NOV	DEC	JAN	FEB	MAR	APR	MAY	JUN	JUL	AUG	SEP
1	1,710	589	633	482	685	490	643	920	1,060	821	636	1,150
2	879	567	627	585	670	490	630	910	985	666	620	1,170
3	681	594	640	473	661	553	598	940	1,100	586	618	1,190
4	592	580	648	506	639	785	603	970	1,070	596	607	1,170
5	595	628	642	524	648	675	607	1,010	1,390	580	592	1,190
6	613	617	613	516	607	643	598	1,020	1,380	567	610	1,180
7	592	617	626	498	657	540	625	965	1,390	556	601	1,160
8	599	602	657	469	616	531	800	990	1,280	552	606	1,170
9	591	588	844	480	666	531	715	1,000	458	558	603	1,140
10	588	601	795	462	925	553	616	1,020	442	563	641	1,190
11	605	557	528	459	1,030	589	607	1,020	450	580	828	1,160
12	603	574	511	467	474	576	607	1,010	499	567	799	1,140
13	597	601	507	467	458	589	666	1,020	530	570	659	1,140
14	630	650	482	497	478	598	612	1,010	526	565	612	1,120
15	622	545	492	1,160	482	580	612	1,020	535	573	603	1,090
16	624	588	487	836	522	607	598	1,000	499	589	605	822
17	643	645	490	634	567	558	580	1,010	571	574	610	859
18	617	595	402	635	558	571	598	1,010	589	591	607	871
19	610	636	487	649	517	562	860	1,010	530	588	598	876
20	615	623	471	685	535	580	746	1,000	526	587	609	891
21	619	636	488	699	535	760	594	1,010	525	807	598	880
22	604	629	474	700	612	780	567	1,010	527	821	607	910
23	588	628	475	677	567	735	564	1,000	504	690	600	899
24	595	630	471	691	513	589	550	1,020	507	625	596	914
25	615	634	456	680	540	720	560	1,020	504	607	582	892
26	586	644	460	704	544	657	543	1,020	494	595	588	868
27	586	637	446	703	540	730	515	1,020	538	605	595	888
28	614	625	448	695	522	661	480	1,040	556	604	599	885
29	589	664	459	690	474	643	525	1,060	523	677	658	901
30	625	662	472	715	------	639	1,260	1,090	528	676	1,590	884
31	619	------	496	680	------	639	------	1,080	------	665	1,110	------
TOTAL	20,246	18,386	16,807	19,118	17,242	19,154	19,079	31,225	21,016	19,201	20,787	30,600
MEAN	653	613	542	617	595	618	636	1,007	701	619	671	1,020
MAX	1,710	664	844	1,160	1,030	785	1,260	1,090	1,390	821	1,590	1,190
MIN	586	545	446	459	458	490	480	910	442	552	582	822
AC-FT	40,160	36,470	33,340	37,920	34,200	37,990	37,840	61,930	41,690	38,090	41,230	60,700

CAL YR 1971 TOTAL 266,105 MEAN 729 MAX 1,830 MIN 370 AC-FT 527,800
WTR YR 1972 TOTAL 252,861 MEAN 691 MAX 1,710 MIN 442 AC-FT 501,500

09522000 COLORADO RIVER AT NORTHERLY INTERNATIONAL BOUNDARY ABOVE MORELOS DAM, NEAR ANDRADE, CALIF.

LOCATION.--Lat 32°43'07", long 114°43'05", in NE¼SE¼ sec.21, T.8 S., R.24 W., Gila and Salt River meridian, in Arizona, Yuma County, on left bank at northerly international boundary, 0.5 mile east of Andrade, 1.1 miles upstream from Morelos Dam, 1.1 miles downstream from Rockwood Gate, and 6.4 miles downstream from gaging station on Colorado River below Yuma Main Canal wasteway.

DRAINAGE AREA.--243,000 sq mi, approximately, including all closed basins entirely within the drainage boundary.

PERIOD OF RECORD.--January 1950 to current year. Prior to October 1958, published as "at international boundary."

GAGE.--Water-stage recorder. Datum of gage is at mean sea level. Supplementary water-stage recorder 1,680 ft upstream at same datum.

EXTREMES.--Current year: Maximum discharge, 3,420 cfs Apr. 15; maximum elevation, 107.05 ft Oct. 1; minimum discharge, 596 cfs Nov. 15; minimum elevation, 101.91 ft Nov. 16.
Period of record: Maximum discharge, 25,390 cfs Jan. 1, 1953; maximum elevation, 114.24 ft Jan. 28, 1958; minimum discharge, 495 cfs Sept. 28, 1970; minimum elevation, 101.82 ft Sept. 18, 1971.

REMARKS.--This record shows water passing northerly international boundary. Minor diversions to the United States below this station from river and by pumping from ground water for irrigation in the floodway between river and Yuma levee.

COOPERATION.--Records furnished by International Boundary and Water Commission, U.S. Section (monthly summary figures rounded in accordance with Geological Survey standard practice).

DISCHARGE, IN CUBIC FEET PER SECOND, WATER YEAR OCTOBER 1971 TO SEPTEMBER 1972

DAY	OCT	NOV	DEC	JAN	FEB	MAR	APR	MAY	JUN	JUL	AUG	SEP
1	1,970	700	710	2,500	719	2,620	3,310	1,160	1,190	2,330	2,880	1,260
2	1,250	681	700	2,490	719	2,610	3,260	1,130	1,140	2,320	2,880	1,290
3	782	700	710	2,490	728	2,630	3,300	1,140	1,190	2,350	2,920	1,320
4	662	690	728	2,540	700	2,610	3,340	1,100	1,190	2,350	2,920	1,290
5	624	728	728	2,500	710	2,590	3,340	1,140	1,500	2,330	2,900	1,320
6	662	710	690	2,420	672	2,840	3,340	1,160	1,560	2,380	2,860	1,320
7	634	710	681	2,430	721	2,940	3,360	1,130	1,590	2,380	2,720	1,330
8	652	710	719	2,380	766	2,920	3,320	1,120	1,560	2,360	2,760	1,330
9	652	690	962	2,420	786	2,980	3,310	1,150	1,790	2,380	2,760	1,330
10	643	700	1,440	2,350	1,090	3,020	3,320	1,180	1,800	2,380	2,760	1,350
11	662	664	1,690	2,210	1,430	3,020	3,360	1,190	1,820	2,320	2,760	1,350
12	662	662	2,030	2,210	1,700	3,010	3,340	1,160	1,930	2,350	2,760	1,330
13	662	672	2,170	2,090	1,760	3,250	3,360	1,160	1,910	2,350	2,740	1,300
14	690	752	2,180	1,800	1,750	3,250	3,320	1,180	1,930	2,360	2,780	1,330
15	690	634	2,210	1,450	1,990	3,250	3,340	1,160	1,930	2,330	2,750	1,290
16	700	643	2,210	1,090	1,980	3,240	3,310	1,160	2,100	2,480	2,750	997
17	719	719	2,190	786	1,970	3,240	3,320	1,160	2,100	2,520	2,720	990
18	710	681	2,180	719	1,930	3,240	3,160	1,150	2,080	2,520	2,760	1,020
19	700	700	2,180	710	1,960	3,220	3,180	1,160	2,320	2,780	2,760	1,020
20	700	690	2,190	748	2,150	3,240	3,160	1,150	2,390	2,840	2,750	1,040
21	710	710	2,210	757	2,180	3,220	3,070	1,150	2,390	2,810	2,510	1,030
22	710	690	2,190	757	2,180	3,200	2,770	1,180	2,400	2,780	2,500	1,060
23	681	690	2,210	728	2,220	3,220	2,470	1,160	2,380	2,780	2,540	1,050
24	672	690	2,220	738	2,210	3,220	2,460	1,140	2,390	2,800	2,520	1,060
25	710	681	2,190	710	2,220	3,220	2,450	1,150	2,400	2,780	2,540	1,040
26	690	710	2,220	719	2,240	3,220	2,460	1,180	2,270	2,810	2,540	1,000
27	690	710	2,180	719	2,220	3,260	2,470	1,150	2,100	2,760	2,220	1,040
28	700	690	2,210	719	2,240	3,250	2,170	1,200	2,120	2,800	2,220	1,020
29	681	719	2,210	719	2,290	3,250	1,860	1,200	2,110	2,800	1,950	1,050
30	719	748	2,190	728	------	3,290	1,550	1,230	2,150	2,810	1,620	1,030
31	719	------	2,360	719	------	3,300	------	1,220	------	2,740	1,300	------
TOTAL	23,108	20,874	53,688	46,346	46,231	95,370	89,780	36,000	57,730	79,090	80,350	35,187
MEAN	745	696	1,732	1,495	1,594	3,076	2,993	1,161	1,924	2,551	2,592	1,173
MAX	1,970	752	2,360	2,540	2,[illegible]	3,300	3,360	1,230	2,400	2,840	2,920	1,350
MIN	624	634	681	710	6,2	2,590	1,550	1,100	1,140	2,320	1,300	990
AC-FT	45,830	41,400	106,500	91,930	91,700	189,200	178,100	71,410	114,500	156,900	159,400	69,790

CAL YR 1971 TOTAL 663,580 MEAN 1,818 MAX 3,360 MIN 567 AC-FT 1,316,000
WTR YR 1972 TOTAL 663,754 MEAN 1,814 MAX 3,360 MIN 624 AC-FT 1,317,000

09522500 GILA GRAVITY MAIN CANAL AT IMPERIAL DAM, ARIZ.-CALIF.

LOCATION.--Lat 32°52'34", long 114°27'18", in SE¼SW¼ sec.30, T.6 S., R.21 W., Gila and Salt River meridian, in Arizona, Yuma County, on right bank 3,200 ft downstream from intake at east end of Imperial Dam.

PERIOD OF RECORD.--August 1943 to current year.

GAGE.--Water-stage recorder. Datum of gage is 160.00 ft above mean sea level.

AVERAGE DISCHARGE.--13 years (1959-72), 1,209 cfs (875,900 acre-ft per year).

EXTREMES.--Period of record: Maximum daily discharge, 2,240 cfs May 25, 1965; no flow at canal intake at times in several years when intake gates were closed.

REMARKS.--Records excellent except those below 100 cfs, which are fair. Gila Gravity Main Canal diverts water from Colorado River at left end of Imperial Dam for irrigation of lands on Gila Project in Arizona. Diversion to this canal began Aug. 17, 1943. Diversion to North Gila Valley from this canal began Dec. 16, 1954. During the 1971 calendar year, water was used for irrigation of 97,664 acres divided as follows: North and South Gila Valleys, 16,127 acres; Yuma Mesa Division, 17,189 acres; Wellton-Mohawk Division, 61,152 acres; Yuma Mesa Auxiliary Division, 3,196 acres. Records of water temperatures for the current year are published in Part 2 of this report.

DISCHARGE, IN CUBIC FEET PER SECOND, WATER YEAR OCTOBER 1971 TO SEPTEMBER 1972

DAY	OCT	NOV	DEC	JAN	FEB	MAR	APR	MAY	JUN	JUL	AUG	SEP
1	208	734	0	169	1,200	1,080	1,090	1,780	1,790	1,610	2,020	1,590
2	218	903	0	169	1,210	1,150	740	1,870	1,590	1,370	2,150	1,380
3	131	780	131	651	1,180	1,220	1,260	1,890	1,260	1,840	2,220	1,200
4	618	551	605	1,120	1,110	910	1,530	1,910	1,320	1,930	2,210	1,500
5	617	717	295	1,150	771	746	1,610	1,620	1,640	1,990	2,180	1,920
6	750	626	589	1,060	550	1,300	1,510	1,460	1,650	2,120	1,860	1,890
7	774	590	1,090	642	913	1,310	1,490	1,120	1,570	2,180	1,830	1,740
8	851	933	1,010	517	1,140	1,430	1,240	2,050	1,580	1,920	1,980	1,610
9	756	1,030	1,270	398	1,030	1,220	875	1,960	1,430	1,750	2,000	1,510
10	689	1,010	889	519	903	1,300	1,570	2,200	1,200	1,910	2,020	1,180
11	1,100	888	660	663	879	1,050	1,630	2,200	826	1,790	1,890	1,720
12	1,730	821	521	576	649	722	1,740	1,820	1,460	1,780	1,970	1,670
13	1,580	616	824	662	534	1,440	1,800	1,410	1,680	1,870	1,520	1,710
14	1,470	654	1,000	395	1,020	1,370	1,570	1,140	1,600	1,900	1,750	1,430
15	1,310	972	1,060	301	1,170	1,360	1,440	1,620	1,820	1,900	1,910	1,360
16	957	1,070	832	252	969	1,240	1,030	1,810	1,730	1,540	1,980	954
17	764	1,040	855	604	1,090	1,390	1,570	1,750	1,590	1,740	2,150	756
18	1,050	1,030	639	597	992	1,000	1,570	1,770	1,390	2,010	2,100	1,410
19	1,080	1,080	724	491	856	788	1,780	1,620	1,720	2,150	2,030	1,490
20	983	768	883	568	653	1,230	1,620	1,460	1,850	2,160	1,510	1,560
21	1,040	941	975	566	1,090	1,500	1,370	1,170	1,910	2,160	1,930	1,600
22	1,100	1,270	728	498	1,010	1,460	1,160	1,640	1,850	1,860	1,970	1,520
23	883	1,490	444	276	1,290	1,430	979	1,690	1,930	1,460	2,050	1,110
24	658	1,150	30	421	1,370	1,590	1,460	1,610	1,740	1,970	2,020	1,070
25	918	444	5.0	682	1,240	1,300	1,600	1,870	1,260	2,110	1,950	1,240
26	1,070	7.2	130	630	1,020	1,050	1,820	1,700	1,650	2,010	1,650	1,480
27	903	0	598	572	748	1,510	1,570	1,520	1,820	2,000	1,470	1,330
28	828	0	744	576	1,190	1,700	1,440	1,100	1,810	1,890	1,860	1,300
29	581	0	586	351	1,240	1,670	1,420	1,680	1,850	1,660	1,870	1,060
30	671	0	674	284	------	1,500	1,140	1,810	1,820	1,280	1,930	1,030
31	440	------	333	905	------	1,380	------	1,870	------	1,850	1,990	------
TOTAL	26,728	22,115.2	19,124.0	17,265	29,017	39,346	42,624	52,120	48,336	57,710	59,970	42,320
MEAN	862	737	617	557	1,001	1,269	1,421	1,681	1,611	1,862	1,935	1,411
MAX	1,730	1,490	1,270	1,150	1,370	1,700	1,820	2,200	1,930	2,180	2,220	1,920
MIN	131	0	0	169	534	722	740	1,100	826	1,280	1,470	756
AC-FT	53,010	43,870	37,930	34,250	57,560	78,040	84,540	103,400	95,870	114,500	119,000	83,940

CAL YR 1971 TOTAL 469,263.2 MEAN 1,286 MAX 2,120 MIN 0 AC-FT 930,800
WTR YR 1972 TOTAL 456,675.2 MEAN 1,248 MAX 2,220 MIN 0 AC-FT 905,800

09523000 ALL-AMERICAN CANAL NEAR IMPERIAL DAM, ARIZ.-CALIF.

LOCATION.--Lat 32°52'17", long 114°28'47", in SE¼NW¼ sec.17, T.15 S., R.24 E., San Bernardino meridian, in California, Imperial County, on left bank 6,000 ft downstream from intake at west end of Imperial Dam, and 13.7 miles upstream from turnout to Yuma Main Canal.

PERIOD OF RECORD.--October 1938 to current year. Prior to October 1939 monthly discharge only, published in WSP 1313.

GAGE.--Water-stage recorder. Datum of gage is 150.00 ft above mean sea level (subject to undetermined changes caused by earthquake of May 18, 1940). Since Aug. 21, 1952, auxiliary water-stage recorder 18.5 miles downstream from base gage.

AVERAGE DISCHARGE.--31 years (1941-72), 6,976 cfs (5,054,000 acre-ft per year).

EXTREMES.--Period of record: Maximum daily discharge, 13,500 cfs Apr. 16, 1938; no flow at times.

REMARKS.--Records excellent. All-American Canal diverts water from Colorado River at Imperial Dam. Water is used for power development and for irrigation in Yuma, Coachella, and Imperial Valleys. Water can be released back to the river through Pilot Knob powerplant and wasteway for power, regulatory purposes, or for downstream use in Mexico. First diversion to All-American Canal began October 1938, but prior to October 1940 was used only for priming canal.

COOPERATION.--Gage-height record furnished by Imperial Irrigation District.

DISCHARGE, IN CUBIC FEET PER SECOND, WATER YEAR OCTOBER 1971 TO SEPTEMBER 1972

DAY	OCT	NOV	DEC	JAN	FEB	MAR	APR	MAY	JUN	JUL	AUG	SEP
1	6,220	3,750	3,700	4,280	4,820	6,600	9,100	6,820	6,920	8,750	8,860	5,320
2	6,040	3,720	3,490	4,140	5,010	6,720	8,710	7,010	6,400	8,430	8,970	5,320
3	5,580	3,870	3,430	5,250	4,780	6,920	8,980	7,120	6,820	8,690	9,020	5,300
4	5,600	4,180	3,590	6,000	4,700	6,910	9,220	7,770	6,270	8,850	8,850	5,340
5	5,370	4,130	3,270	6,030	4,590	6,520	9,550	7,420	6,620	8,800	8,860	5,680
6	5,440	4,170	3,830	6,050	4,340	7,240	9,850	6,970	6,700	8,950	8,150	5,930
7	5,660	4,180	4,530	5,770	4,640	7,670	9,510	6,860	6,950	8,530	8,310	6,300
8	5,520	4,290	4,910	5,690	4,610	7,770	9,430	7,080	7,370	8,460	8,400	6,500
9	5,430	4,430	5,440	5,430	4,740	8,560	9,490	7,210	7,190	8,150	8,450	6,510
10	5,320	4,180	5,000	6,040	5,340	8,570	9,710	7,530	6,730	8,430	8,690	6,760
11	5,410	4,450	5,150	5,450	5,380	8,490	9,670	7,530	6,560	8,840	8,220	6,960
12	5,580	4,620	4,950	5,410	5,620	8,330	9,800	7,540	7,090	8,900	8,130	6,920
13	5,730	4,570	5,020	5,330	5,260	8,540	9,800	7,310	6,980	8,870	7,950	6,940
14	5,830	3,960	5,090	5,060	5,430	8,870	9,270	6,990	7,060	8,740	7,910	7,010
15	5,630	4,150	4,790	4,360	5,880	8,990	8,940	7,170	7,310	8,390	7,830	6,560
16	5,510	4,070	5,170	3,810	6,050	9,060	8,730	7,400	7,710	8,240	7,790	6,490
17	5,410	4,230	5,110	3,920	5,970	9,050	8,070	7,710	7,660	8,440	8,120	6,540
18	5,430	4,540	4,930	4,130	6,020	8,670	8,510	7,680	7,120	8,620	8,030	6,830
19	5,190	4,310	4,500	4,160	6,140	8,360	8,830	7,400	7,690	8,870	7,760	6,790
20	5,050	4,360	4,940	4,170	5,880	8,860	9,320	7,170	7,980	8,940	7,550	6,960
21	4,980	3,990	5,250	4,160	6,100	8,760	9,290	6,830	8,060	8,410	7,620	7,010
22	4,630	3,810	5,290	4,030	5,650	8,850	8,680	6,810	8,400	8,160	7,620	6,630
23	4,690	3,590	4,840	3,820	5,840	9,310	8,400	6,840	8,250	8,250	7,740	6,670
24	4,730	3,550	3,730	4,130	6,290	9,190	8,650	6,930	8,110	8,370	8,060	6,590
25	4,640	3,660	3,230	4,370	6,250	8,660	8,770	6,870	7,730	8,470	8,020	6,500
26	4,360	3,420	3,840	4,310	6,140	8,960	8,940	6,900	7,890	8,690	8,090	6,500
27	4,160	3,530	4,580	4,750	5,980	9,140	9,000	6,910	7,840	8,850	7,610	6,510
28	4,400	3,510	4,930	4,500	5,910	9,100	8,750	6,710	8,080	8,810	7,710	6,770
29	3,850	3,640	5,140	4,170	6,080	9,230	8,400	6,970	8,550	8,560	7,450	6,370
30	3,910	3,590	5,190	3,850	------	9,650	7,460	6,990	8,660	8,610	6,490	6,530
31	3,840	------	4,680	4,340	------	9,340	------	6,910	------	8,610	5,360	------
TOTAL	159,140	120,450	141,540	146,910	159,440	260,890	270,830	221,360	222,700	266,680	247,620	193,040
MEAN	5,134	4,015	4,566	4,739	5,498	8,416	9,028	7,141	7,423	8,603	7,988	6,435
MAX	6,220	4,620	5,440	6,050	6,290	9,650	9,850	7,770	8,660	8,950	9,020	7,010
MIN	3,840	3,420	3,230	3,810	4,340	6,520	7,460	6,710	6,270	8,150	5,360	5,300
AC-FT	315,700	238,900	280,700	291,400	316,200	517,500	537,200	439,100	441,700	529,000	491,200	382,900

CAL YR 1971 TOTAL 2,348,940 MEAN 6,435 MAX 9,520 MIN 3,230 AC-FT 4,659,000
WTR YR 1972 TOTAL 2,410,600 MEAN 6,586 MAX 9,850 MIN 3,230 AC-FT 4,781,000

09527000 PILOT KNOB POWERPLANT AND WASTEWAY NEAR PILOT KNOB, CALIF.

LOCATION.--Lat 32°44'15", long 114°42'56", in NW¼SW¼ sec.25, T.16 S., R.21 E., San Bernardino meridian, Imperial County, 2 miles east of summit of Pilot Knob, 6 miles west of Yuma, Ariz., and 20.8 miles downstream from intake of All-American Canal at Imperial Dam.

PERIOD OF RECORD.--February 1939 to current year. Prior to October 1943 monthly discharge only, published in WSP 1313. Prior to October 1956, published as Pilot Knob wasteway near Pilot Knob.

GAGE.--Totalizing flowmeter on each turbine. In addition water-stage recorder in forebay on right bank of All-American Canal (also used as auxiliary gage for sta 09527500); tailrace gage with remote recorder logged hourly in control house; calibrated wicket gates for turbine flow and calibrated bypass gates for wasteway flow which are logged for each change. Datum of forebay nonrecording gage is 150.00 ft; that of tailrace nonrecording gage is 0.00 ft; elevation of sill of bypass gates is 147.88 ft above mean sea level.

EXTREMES.--Period of record: Maximum daily discharge, 8,350 cfs Jan. 26, 1958; no flow for long periods.

REMARKS.--Records excellent. Daily discharge computed from flowmeter equipment or from head and gate openings on wicket gates. Records show water released through Pilot Knob powerplant and wasteway from All-American Canal and returned to Colorado River through Rockwood gates. Pilot Knob wasteway completed in summer of 1938 and first flow occurred Feb. 5, 1939. Pilot Knob powerplant was completed in January 1957 and first flow occurred Jan. 14, 1957. See table below for monthly return flow by Pilot Knob wasteway only.

COOPERATION.--Midnight readings of flowmeter, recorder graph of forebay, and record of tailrace elevation and gate openings furnished by Imperial Irrigation District.

DISCHARGE, IN CUBIC FEET PER SECOND, WATER YEAR OCTOBER 1971 TO SEPTEMBER 1972

DAY	OCT	NOV	DEC	JAN	FEB	MAR	APR	MAY	JUN	JUL	AUG	SEP
1			0	1,800	0	1,890	2,360		0	1,510	2,020	
2			0	1,660	0	1,870	2,330		0	1,550	2,050	
3			0	1,770	0	1,840	2,380		0	1,730	2,100	
4			0	1,820	0	1,530	2,430		0	1,690	2,100	
5			0	1,740	0	1,640	2,420		0	1,700	2,120	
6			0	1,690	0	1,940	2,420		0	1,740	2,060	
7			0	1,770	0	2,120	2,390		0	1,750	1,940	
8			0	1,800	0	2,120	2,150		0	1,750	1,970	
9			0	1,820	0	2,130	2,220		1,110	1,740	1,910	
10			483	1,780	0	2,170	2,370		1,160	1,730	1,920	
11			1,040	1,620	41	2,120	2,440		1,150	1,690	1,710	
12			1,380	1,490	1,090	2,140	2,420		1,240	1,710	1,680	
13			1,470	1,340	1,150	2,360	2,380		1,180	1,700	1,820	
14			1,480	1,080	1,120	2,350	2,400		1,200	1,720	1,910	
15			1,480	0	1,360	2,360	2,400		1,190	1,620	1,900	
16			1,490	0	1,290	2,330	2,400		1,420	1,720	1,900	
17			1,450	0	1,260	2,360	2,390		1,350	1,780	1,880	
18			1,430	0	1,170	2,360	2,270		1,280	1,760	1,910	
19			1,420	0	1,280	2,360	1,960		1,580	2,020	1,900	
20			1,450	0	1,450	2,350	2,050		1,650	2,060	1,880	
21			1,460	0	1,430	2,140	2,170		1,660	1,830	1,650	
22			1,460	0	1,380	2,130	1,890		1,700	1,770	1,620	
23			1,450	0	1,430	2,190	1,580		1,700	1,860	1,690	
24			1,470	0	1,450	2,360	1,600		1,750	1,990	1,700	
25			1,470	0	1,470	2,160	1,580		1,770	1,990	1,810	
26			1,480	0	1,480	2,260	1,620		1,750	2,020	1,780	
27			1,490	0	1,440	2,190	1,660		1,610	1,970	1,460	
28			1,510	0	1,460	2,240	1,400		1,600	1,980	1,440	
29			1,480	0	1,550	2,290	1,110		1,580	1,900	1,150	
30			1,480	0	------	2,370	0		1,620	1,900	0	
31		------	1,640	0	------	2,340	------		------	1,860	0	------
TOTAL	0	0	30,963	23,180	24,301	67,010	61,190	0	32,250	55,740	52,980	0
MEAN	0	0	999	748	838	2,162	2,040	0	1,075	1,798	1,709	0
MAX	0	0	1,640	1,820	1,550	2,370	2,440	0	1,770	2,060	2,120	0
MIN	0	0	0	0	0	1,530	0	0	0	1,510	0	0
AC-FT	0	0	61,420	45,980	48,200	132,900	121,400	0	63,970	110,600	105,100	0
(a)	0	0	6.0	0	0	0	0	0	0	0	0	0

CAL YR 1971 TOTAL 334,094 MEAN 915 MAX 2,400 MIN 0 AC-FT 662,700 a 6.0
WTR YR 1972 TOTAL 347,614 MEAN 950 MAX 2,440 MIN 0 AC-FT 689,500 a 6.0

a Return flow, in acre-feet, by Pilot Knob wasteway (included in daily discharge table).

09527500 ALL-AMERICAN CANAL BELOW PILOT KNOB WASTEWAY, CALIF.

LOCATION.--Lat 32°44'07", long 114°43'23", in NW¼SE¼ sec.26, T.16 S., R.21 E., San Bernardino meridian, Imperial County, on left bank 0.4 mile downstream from Pilot Knob wasteway, 3 miles west of Yuma, Ariz., 15 miles upstream from turnout to Coachella Canal, and 21.2 miles downstream from intake at Imperial Dam.

PERIOD OF RECORD.--October 1961 to current year.

GAGE.--Water-stage recorder. Datum of gage is 150.00 ft above mean sea level. Auxiliary water-stage recorder on right bank 0.4 mile upstream used to determine head on Pilot Knob check gates (also used as forebay gage for sta 09527000, Pilot Knob powerplant and wasteway). Datum of auxiliary gage is 150.00 ft above mean sea level.

AVERAGE DISCHARGE.--11 years, 4,665 cfs (3,380,000 acre-ft per year).

EXTREMES.--Period of record: Maximum daily discharge, 7,220 cfs July 12, 1963; no flow Jan. 4, 1967.

REMARKS.--Records excellent. Water is used for power development at three sites below station and for irrigation in Coachella and Imperial Valleys.

COOPERATION.--Gage-height record and log of gate operation furnished by Imperial Irrigation District.

DISCHARGE, IN CUBIC FEET PER SECOND, WATER YEAR OCTOBER 1971 TO SEPTEMBER 1972

DAY	OCT	NOV	DEC	JAN	FEB	MAR	APR	MAY	JUN	JUL	AUG	SEP
1	5,660	3,290	3,220	2,190	3,810	4,010	6,100	5,810	5,650	6,220	5,730	4,270
2	5,470	3,130	3,070	2,190	4,070	4,130	5,980	5,810	5,130	6,030	5,850	4,260
3	5,070	3,190	3,030	2,960	3,920	4,370	6,130	5,780	5,410	6,040	5,840	4,250
4	5,090	3,460	3,140	3,460	3,880	4,690	6,250	6,220	5,280	6,270	5,700	4,230
5	4,870	3,400	2,940	3,540	3,840	4,430	6,400	6,060	5,460	6,130	5,800	4,360
6	4,860	3,530	3,390	3,680	3,860	4,780	6,430	5,810	5,480	6,250	5,570	4,490
7	5,000	3,530	3,990	3,430	3,910	5,100	6,220	5,870	5,530	5,850	5,810	4,870
8	4,880	3,580	4,200	3,410	3,870	5,210	6,350	5,900	5,730	5,820	5,820	5,040
9	4,830	3,710	4,470	3,220	3,860	5,620	6,430	5,770	5,150	5,610	5,830	5,180
10	4,710	3,490	3,800	3,690	3,920	5,620	6,430	5,970	4,740	5,680	5,780	5,480
11	4,760	3,700	3,740	3,250	3,860	5,650	6,230	5,970	4,680	6,000	5,520	5,670
12	4,820	3,800	3,340	3,360	3,830	5,520	6,310	5,970	5,040	6,040	5,570	5,530
13	4,870	3,860	3,300	3,410	3,640	5,560	6,310	5,820	4,960	6,080	5,400	5,530
14	5,000	3,650	3,300	3,250	3,680	5,730	5,980	5,700	4,970	5,990	5,210	5,610
15	4,780	3,820	3,030	3,230	3,750	5,810	5,760	5,780	5,130	5,880	5,040	5,310
16	4,680	3,770	3,250	3,080	3,950	5,880	5,750	5,900	5,290	5,780	4,980	5,400
17	4,590	3,770	3,200	3,280	3,970	5,870	5,110	6,160	5,470	5,820	5,280	5,440
18	4,580	3,750	3,070	3,380	4,100	5,600	5,320	6,180	5,240	5,890	5,270	5,650
19	4,380	3,540	2,820	3,390	4,220	5,480	6,000	5,970	5,430	5,870	5,130	5,620
20	4,230	3,670	3,120	3,420	3,960	5,950	6,210	5,880	5,560	5,900	5,140	5,770
21	4,170	3,480	3,360	3,430	4,120	6,010	6,120	5,690	5,600	5,620	5,390	5,840
22	3,910	3,340	3,390	3,370	3,790	6,100	5,920	5,560	5,700	5,490	5,360	5,540
23	4,000	3,130	3,020	3,170	3,780	6,320	5,990	5,500	5,650	5,590	5,370	5,580
24	4,040	3,140	2,020	3,300	4,120	6,130	6,030	5,570	5,610	5,490	5,470	5,560
25	4,040	3,280	1,580	3,560	4,140	5,910	6,120	5,590	5,360	5,480	5,340	5,450
26	3,770	3,010	2,060	3,440	4,100	5,950	6,250	5,610	5,450	5,610	5,510	5,380
27	3,550	3,070	2,780	3,880	3,980	6,030	6,320	5,720	5,430	5,780	5,410	5,390
28	3,710	3,110	2,960	3,770	3,870	6,000	6,310	5,750	5,550	5,720	5,440	5,540
29	3,290	3,060	3,210	3,490	3,800	6,010	6,240	5,830	5,880	5,680	5,420	5,270
30	3,390	3,090	3,270	3,250	------	6,320	6,010	5,810	5,990	5,830	5,080	5,400
31	3,430	------	2,740	3,450	------	6,190	------	5,690	------	5,740	4,520	------
TOTAL	138,430	103,350	97,810	102,930	113,600	171,980	183,010	180,650	161,550	181,180	168,580	156,850
MEAN	4,465	3,445	3,155	3,320	3,917	5,548	6,100	5,827	5,385	5,845	5,438	5,228
MAX	5,660	3,860	4,470	3,880	4,220	6,320	6,430	6,220	5,990	6,270	5,850	5,840
MIN	3,290	3,010	1,580	2,190	3,640	4,010	5,110	5,500	4,680	5,480	4,520	4,230
AC-FT	274,600	205,000	194,000	204,200	225,300	341,100	363,000	358,300	320,400	359,400	334,400	311,100

CAL YR 1971 TOTAL 1,717,340 MEAN 4,705 MAX 6,320 MIN 1,580 AC-FT 3,406,000
WTR YR 1972 TOTAL 1,759,920 MEAN 4,809 MAX 6,430 MIN 1,580 AC-FT 3,491,000

Return surface flows below Imperial Dam, Ariz.-Calif.

Between Imperial Dam and the international boundary return surface flows from irrigated areas enter the Colorado River through many drains and wasteways in Arizona and California. Other return flows enter the Gila River below the gaging station near Dome (09520500). In addition, return flows collected by the Main Drain and East Main Canal are delivered across the international boundary for use in Mexico.

Diversions for irrigation in the Gila Project in Arizona are made at Imperial Dam by the Gila Gravity Main Canal. (See sta 09522500.) Diversions for the Yuma Project in Arizona and California are made at Imperial Dam by the All-American Canal (see sta 09523000) and by the Yuma Main Canal. (See stas 09524000 and 09525500.)

See figure 2 on p. 38 for a schematic diagram showing location of diversions and return flows.

09525000. YUMA MAIN CANAL WASTEWAY.--See daily table elsewhere in this report.

09527000. PILOT KNOB POWERPLANT AND WASTEWAY.--See daily table elsewhere in this report.

09528600. LAGUNA CANAL WASTEWAY.
LOCATION.--Water-stage recorder and sharp-crested weir, in SE¼SW¼ sec.14, T.7 S., R.22 W., 1,000 ft downstream from Laguna Dam and 0.7 mile upstream from outlet to Colorado River.

PERIOD OF RECORD.--Monthly discharge October 1960 to current year.

REMARKS.--Record shows waste water from North Gila Valley Irrigation District returned to Colorado River. Flow record computed from standard weir rating.

09528800. LEVEE CANAL WASTEWAY.
LOCATION.--Water-stage recorder and sharp-crested weir, in SE¼SW¼ sec.4, T.8 S., R.22 W., 1,000 ft upstream from outlet to Colorado River.

PERIOD OF RECORD.--Monthly discharge October 1960 to current year.

REMARKS.--Record shows waste water from North Gila Valley Irrigation District returned to Colorado River.

09529000. NORTH GILA DRAIN NO. 1.
LOCATION.--Enters Colorado River in NE¼NW¼ sec.9, T.8 S., R.22 W., 5.6 miles downstream from Laguna Dam.

PERIOD OF RECORD.--Monthly discharge October 1960 to current year.

REMARKS.--Record shows waste water from North Gila Valley Irrigation District returned to Colorado River. There is no gage, but, due to fairly constant drainage, flow record is computed by interpolation between discharge measurements made monthly.

09529050. NORTH GILA DRAIN NO. 3.
LOCATION.--Drain enters wasteway to Gila River in NE¼NE¼ sec.18, T.8 S., R.21 W., 1,000 ft upstream from Gila River.

PERIOD OF RECORD.--Monthly discharge April 1962 to current year.

REMARKS.--Record shows seepage from Gila Gravity Main Canal. There is no gage; records are computed by interpolation between discharge measurements made monthly.

09529100. FORTUNA WASTEWAY.
LOCATION.--Water-stage recorder and sharp-crested weir, in NE¼ sec.30, T.8 S., R.21 W., 1.3 miles upstream from Gila River.

PERIOD OF RECORD.--Monthly discharge October 1960 to September 1963, October 1964 to current year.

REMARKS.--Record shows waste water spilled from Gila Gravity Main Canal; flow rarely reaches Gila River.

09529150. NORTH GILA MAIN CANAL WASTEWAY.
LOCATION.--Water-stage recorder in NE¼NW¼ sec.22, T.8 S., R.22 W., 1,000 ft upstream from outlet to Gila River. Prior to July 1966 water-stage recorder and sharp-crested weir, 1 mile upstream from outlet to Gila River.

PERIOD OF RECORD.--Monthly discharge October 1960 to current year.

REMARKS.--Record shows waste water from North Gila Valley Irrigation District. Prior to July 1966 record shows waste water less flow diverted for irrigation between gage and Gila River.

09529160. SOUTH GILA PUMP OUTLET CHANNEL NO. 3.
LOCATION.--Water-stage recorder in NW¼SE¼ sec.22, T.8 S., R.22 W., 0.5 mile upstream from outlet to Gila River. Prior to Aug. 1, 1965, record obtained by Badger total-flow meter about 500 ft downstream.

PERIOD OF RECORD.--Monthly discharge January 1965 to current year.

REMARKS.--Record shows water pumped from wells in South Gila Valley Unit.

09529200. BRUCE CHURCH DRAIN.
LOCATION.--Pump in NW¼NE¼ sec.21, T.8 S., R.22 W., 0.2 mile upstream from outlet to Gila River.

PERIOD OF RECORD.--Monthly discharge April 1962 to current year.

REMARKS.--Record shows seepage water from parts of secs.15, 16, and 21 (Bruce Church Ranch). Flow computed by interpolation between discharge measurements; prior to Nov. 30, 1970, flow determined from pump rating.

Return surface flows below Imperial Dam, Ariz.-Calif.--Continued

09529240. SOUTH GILA PUMP OUTLET CHANNEL NO. 2.
LOCATION.--Water-stage recorder in NW¼SW¼ sec.28, T.8 S., R.22 W., 0.6 mile upstream from outlet to Gila River; prior to Oct. 18, 1965, outlet was to Wellton-Mohawk Main Outlet Drain. Prior to Aug. 1, 1965, Sparling meter at outlet to Wellton-Mohawk Main Outlet Drain.

PERIOD OF RECORD.--Monthly discharge January 1962 to current year.

REMARKS.--Record shows water pumped from wells in South Gila Valley Unit and conveyed by concrete channel to the Gila River.

09529250. BRUCE CHURCH WASTEWAY.
LOCATION.--Water-stage recorder and sharp-crested weir, in SE¼SE¼ sec.20, T.8 S., R.22 W., 500 ft upstream from outlet to Gila River.

PERIOD OF RECORD.--Monthly discharge October 1960 to current year.

REMARKS.--Record shows waste water from North Gila Valley Irrigation District returned to Gila River.

09529300. WELLTON-MOHAWK MAIN OUTLET DRAIN (CONVEYANCE CHANNEL).
LOCATION.--Water-stage recorder in NW¼NE¼ sec.17, T.8 S., R.21 W., 8 miles upstream from outlet to Gila River (M.O.D.E. 1), which is 0.6 mile upstream from mouth of Gila River. Prior to Feb. 20, 1962, gage heights measured from reference point on measuring bridge.

PERIOD OF RECORD.--Monthly discharge October 1960 to current year.

REMARKS.--Record shows water pumped from numerous wells in Wellton-Mohawk Irrigation and Drainage District to lower the water table. Drainage is conveyed by concrete and earth channels to Gila River or Colorado River. (See stas 09529350, 09531800, and 09531900.)

09529350. MAIN OUTLET DRAIN ABOVE GILA RIVER.
LOCATION.--Water-stage recorder in NE¼NE¼ sec.30, T.8 S., R.22 W., about 1,000 ft upstream from outlet to Gila River (M.O.D.E. 1), which is 0.6 mile upstream from mouth of Gila River, and 8 miles downstream from sta 09529300.

PERIOD OF RECORD.--Monthly discharge October 1965 to current year.

REMARKS.--Record shows water pumped from numerous drainage wells in Wellton-Mohawk Irrigation and Drainage District. Above this station flow passes through 8 miles of unlined channel. Since completion of the Main Outlet Drain Extension on Nov. 15, 1965, flow can be returned to the Gila River or Colorado River by any one of, or combination of, three outlets. These outlets are known as: M.O.D.E. 1 (release to the Gila River about 1,000 ft below sta 09529350); M.O.D.E. 2 (see sta 09531800), release to Colorado River above Morelos Dam; and M.O.D.E. 3 (see sta 09531900), release to Colorado River below Morelos Dam. For the 1972 water year no water was released to Gila River through M.O.D.E. 1.

09529360. SOUTH GILA PUMP OUTLET CHANNEL NO. 1.
LOCATION.--Water-stage recorder in SW¼NE¼ sec.30, T.8 S., R.22 W., 0.2 mile upstream from outlet to Gila River, which is 0.6 mile upstream from mouth of Gila River. Prior to Aug. 1, 1965, Sparling flowmeter 300 ft upstream.

PERIOD OF RECORD.--Monthly discharge August 1961 to current year.

REMARKS.--Record shows water pumped from wells in South Gila Valley Unit and conveyed by concrete channel to Gila River.

09529400. SOUTH GILA DRAIN NO. 2.
LOCATION.--Near center of sec.24, T.8 S., R.23 W., at outlet to Colorado River. Prior to Oct. 1, 1969, Sparling flowmeter at same site.

PERIOD OF RECORD.--Monthly discharge October 1960 to current year.

REMARKS.--Record shows ground-water drainage and occasional waste water from South Gila Valley Unit returned to Colorado River. There is no gage; flow record computed by interpolation between discharge measurements made monthly.

09529420. SOUTH GILA TERMINAL WASTEWAY.
LOCATION.--Water-stage recorder and Parshall flume in SW¼NW¼ sec.36, T.8 S., R.23 W., 2.0 miles upstream from outlet to Colorado River. Prior to Aug. 1, 1965, total-flow meter at same site.

PERIOD OF RECORD.--Monthly discharge March 1965 to current year.

REMARKS.--Record shows waste water from South Gila Canal of South Gila Valley Unit returned to Colorado River.

09529440. SOUTH GILA PUMP OUTLET CHANNEL NO. 4.
LOCATION.--Water-stage recorder and broad-crested weir, in NW¼NW¼ sec.26, T.8 S., R.23 W., 1.5 miles upstream from outlet to Colorado River.

PERIOD OF RECORD.--Monthly discharge July 1965 to current year.

REMARKS.--Record shows water pumped from wells in South Gila Valley Unit and conveyed by concrete-lined channel to Colorado River.

09529600. RESERVATION DRAIN NO. 7.
LOCATION.--At downstream end of culvert on Avenue C in NE¼NE¼ sec.33, T.15 S., R.23 E., San Bernardino meridian, 0.5 mile upstream from outlet to Reservation Main Drain. Prior to Oct. 1, 1969, nonrecording gage at same site.

PERIOD OF RECORD.--Monthly discharge March 1966 to current year.

REMARKS.--Record shows drainage water from sec.34, T.15 S., R.23 E., and is used with sta 09529700 to determine seepage from All-American Canal. There is no gage; flow record computed by interpolation between discharge measurements made monthly. Beginning June 20, 1967, Imperial Irrigation District makes discharge measurements weekly.

Return surface flows below Imperial Dam, Ariz.-Calif.--Continued

09529700. RESERVATION MAIN DRAIN NO. 6.
LOCATION.--Nonrecording gage on upstream right piling of 9th Street Bridge, in SE¼SW¼ sec.32, T.15 S., R.23 E., San Bernardino meridian.

PERIOD OF RECORD.--Monthly discharge March 1966 to current year.

REMARKS.--Record shows waste and drainage water from the Reservation Division, and is used with sta 09529600 to determine seepage from All-American Canal, which parallels drain for 4 miles. Flow record computed by interpolation between discharge measurements made monthly. The Imperial Irrigation District makes discharge measurements weekly.

09529800. RESERVATION DRAIN NO. 2.
LOCATION.--At upstream side of bridge in SW¼NW¼ sec.6, T.16 S., R.23 E., San Bernardino meridian, 0.9 mile upstream from outlet to Reservation Main Drain.

PERIOD OF RECORD.--Monthly discharge March 1966 to current year.

REMARKS.--Record used to compute seepage from All-American Canal in sec.31, T.15 S., R.22 E. There is no gage; flow record computed by interpolation between discharge measurements made monthly. The Imperial Irrigation District makes discharge measurements weekly.

09529900. RESERVATION DRAIN NO. 3.
LOCATION.--Nonrecording gage on pier on right side of 5th Street Bridge in SE¼SE¼ sec.10, T.16 S., R.22 E., San Bernardino meridian, 1.0 mile upstream from outlet to Reservation Main Drain.

PERIOD OF RECORD.--Monthly discharge March 1966 to current year.

REMARKS.--Record used to compute seepage from All-American Canal upstream from Yuma Main Canal. Flow record computed by interpolation between discharge measurements made monthly. Imperial Irrigation District makes discharge measurements weekly.

09530000. RESERVATION MAIN DRAIN NO. 4.
LOCATION.--Water-stage recorder in NW¼SE¼ sec.26, T.16 S., R.22 E., San Bernardino meridian, at upstream side of railroad culvert. Drainage canal enters Yuma Main Canal wasteway 200 ft downstream from spillway structure. Prior to May 1955, it entered 500 ft upstream from outlet of Yuma Main Canal wasteway in SE¼SW¼ sec.26, T.16 S., R.22 E., San Bernardino meridian.

PERIOD OF RECORD.--Monthly discharge January 1913 to April 1920, October 1921 to March 1925, January 1934 to current year (calendar year discharge only 1934-36). Prior to October 1955, published as California drainage canal. Prior to January 1937, no gage; 1937 to Apr. 16, 1941, nonrecording gages at same site at different datums.

REMARKS.--Record shows waste and drainage water from area east of Yuma Main Canal on Reservation Division. Since 1939, seepage from All-American Canal has caused large increase. Flow is not included in the record of Yuma Main Canal wasteway.

09530200. YUMA MESA OUTLET DRAIN.
LOCATION.--Venturi meter with recorder in SE¼SW¼ sec.28, T.16 S., R.22 E., San Bernardino meridian, in Arizona, Yuma County, 0.3 mile from outlet to Colorado River.

PERIOD OF RECORD.--Monthly discharge July 1970 to current year.

REMARKS.--Record shows water pumped from wells on the Yuma Mesa and conveyed by underground conduit to Colorado River.

COOPERATION.--Records furnished by Bureau of Reclamation prior to July 21, 1972.

09530400. RESERVATION DRAIN NO. 11.
LOCATION.--At outlet to Drain 8-B (Araz drain), in NE¼NE¼ sec.19, T.16 S., R.22 E., San Bernardino meridian.

PERIOD OF RECORD.--Monthly discharge March 1966 to current year.

REMARKS.--Record shows drainage from sec.20, T.16 S., R.22 E. Flow at this station, with that at sta 09530500, is used to determine seepage from All-American Canal. There is no gage; flow record computed by interpolation between discharge measurements made monthly. Beginning June 20, 1967, Imperial Irrigation District makes discharge measurements weekly.

09530500. DRAIN 8-B.
LOCATION.--Enters Colorado River in NE¼NW¼ sec.30, T.16 S., R.22 E., San Bernardino meridian, 4 miles downstream from outlet of Yuma Main Canal wasteway.

PERIOD OF RECORD.--Monthly discharge March 1948 to current year. Prior to October 1955, published as Araz drain.

REMARKS.--Record shows seepage from All-American Canal, and waste and drainage water west of Yuma Main Canal on the Reservation Division. Flow at this station, with that at sta 09530400, is used to determine seepage from All-American Canal. There is no gage, but due to fairly constant drainage, flow record is computed by interpolation between discharge measurements made monthly. Imperial Irrigation District makes discharge measurements weekly at site 1,000 ft upstream.

09531800. MAIN OUTLET DRAIN EXTENSION ABOVE MORELOS DAM (M.O.D.E. 2).
LOCATION.--Water-stage recorder and Parshall flume in NW¼NW¼ sec.36, T.16 S., R.21 E., San Bernardino meridian, at outlet to Colorado River, 1.7 miles upstream from Morelos Dam.

PERIOD OF RECORD.--Monthly discharge November 1965 to current year.

REMARKS.--Record shows water conveyed to Colorado River 1.7 miles above Morelos Dam, from numerous drainage wells in Wellton-Mohawk Irrigation and Drainage District. (See also stas 09529300, 09529350, 09531900.)

Return surface flows below Imperial Dam, Ariz.-Calif.--Continued

09531850. COOPER WASTEWAY.
LOCATION.--Water-stage recorder and weir, in NE¼NE¼ sec.28, T.8 S., R.24 W., 0.6 mile upstream from Morelos Dam. Prior to July 14, 1971, at site 1 mile downstream.

PERIOD OF RECORD.--Monthly discharge January 1934 to current year.

REMARKS.--Record shows waste water from Valley Division returned to Colorado River.

COOPERATION.--Record furnished by International Boundary and Water Commission (U.S. Section).

09531900. MAIN OUTLET DRAIN EXTENSION BELOW MORELOS DAM (M.O.D.E. 3).
LOCATION.--Water-stage recorder and Parshall flume in NW¼SE¼ sec.28, T.8 S., R.24 W., at outlet to Colorado River just downstream from Morelos Dam.

PERIOD OF RECORD.--Monthly discharge November 1965 to current year.

REMARKS.--Record shows water conveyed to Colorado River below Morelos Dam, from numerous drainage wells in Wellton-Mohawk Irrigation and Drainage District. (See also stas 09529300, 09529350, 09531800.)

COOPERATION.--Record furnished by International Boundary and Water Commission (U.S. Section).

09532500. ELEVEN MILE WASTEWAY.
LOCATION.--Water-stage recorder and regulating gate in SE¼NW¼ sec.8, T.9 S., R.24 W., 3.2 miles downstream from Morelos Dam.

PERIOD OF RECORD.--Monthly discharge January 1924 to current year.

REMARKS.--Record shows waste water from Valley Division returned to Colorado River.

COOPERATION.--Record furnished by International Boundary and Water Commission (U.S. Section).

09533000. TWENTY-ONE MILE WASTEWAY.
LOCATION.--Water-stage recorder and weir in NE¼NW¼ sec.35, T.10 S., R.25 W., 0.6 mile upstream from outlet to Colorado River, which is 2.4 miles upstream from southerly international boundary and 2.6 miles northwest of San Luis, Ariz. Prior to May 1, 1971, water-stage recorder and Parshall flume at site 200 ft upstream.

PERIOD OF RECORD.--Monthly discharge March 1939 to current year.

REMARKS.--Record shows waste water from Valley Division returned to Colorado River.

COOPERATION.--Record furnished by International Boundary and Water Commission (U.S. Section).

09534000. MAIN DRAIN.
LOCATION.--Flowmeters in discharge pipes at pumping plant in SE¼NE¼ sec.11, T.11 S., R.25 W., 0.4 mile west of San Luis, Ariz. Prior to Apr. 1, 1969, rated pumps with forebay and afterbay gages to measure head.

PERIOD OF RECORD.--Monthly discharge January 1919 to current year.

REMARKS.--Record shows flow which consists mostly of drainage water from the Valley Division which is pumped across the Arizona-Sonora boundary for use in Mexico. Flowmeters checked by discharge measurements made by International Boundary and Water Commission (U.S. Section).

COOPERATION.--Record furnished by International Boundary and Water Commission (U.S. Section).

09534300. WEST MAIN CANAL WASTEWAY.
LOCATION.--Water-stage recorder in SE¼NE¼ sec.11, T.11 S., R.25 W., 150 ft upstream from outlet to Main drain, which is 175 ft upstream from East Main Canal wasteway and 0.4 mile west of San Luis, Ariz.

PERIOD OF RECORD.--Monthly discharge February 1971 to current year.

REMARKS.--Record shows waste water from Valley Division which is discharged across the Arizona-Sonora boundary for use in Mexico.

COOPERATION.--Record furnished by International Boundary and Water Commission (U.S. Section).

09534500. EAST MAIN CANAL WASTEWAY.
LOCATION.--Water-stage recorder, in NW¼SW¼ sec.12, T.11 S., R.25 W., 0.2 mile east of Main drain pumping plant and 0.2 mile west of San Luis, Ariz.

PERIOD OF RECORD.--Monthly discharge January 1924 to June 1928, January 1932 to December 1933, April 1935 to current year. Calendar year estimates 1934 and 1935, published in WSP 1313.

REMARKS.--Record shows amount of unused water at the extreme end of the Valley Division which is discharged across the Arizona-Sonora boundary for use in Mexico.

COOPERATION.--Record furnished by International Boundary and Water Commission (U.S. Section).

Return surface flows below Imperial Dam, Ariz.-Calif.--Continued

MONTHLY RETURN FLOWS, IN ACRE-FEET, WATER YEAR OCTOBER 1971 TO SEPTEMBER 1972

Month	Laguna Canal wasteway 09528600	Levee Canal wasteway 09528800	North Gila Drain No. 1 09529000	North Gila Drain No. 3 09529050	Fortuna wasteway 09529100
October	0	195	672	9.5	65
November	4.5	215	416	5.0	102
December	.2	141	273	5.4	99
CAL YR 1971	21	1,850	6,250	176	779
January	0	44	191	12	60
February	0	119	174	12	51
March	0	87	231	20	42
April	0	77	244	24	52
May	0	183	261	36	37
June	0	124	245	49	40
July	0	183	284	55	52
August	.6	190	411	66	117
September	6.0	236	791	46	236
WTR YR 1972	11	1,790	4,190	340	953

Month	North Gila Main Canal wasteway 09529150	South Gila Pump Outlet Channel No. 3 09529160	Bruce Church Drain 09529200	South Gila Pump Outlet Channel No. 2 09529240	Bruce Church wasteway 09529250
October	26	2.9	27	1,060	152
November	39	4.5	12	1,090	107
December	9.3	272	6.1	2,180	107
CAL YR 1971	300	10,720	369	20,730	728
January	4.5	205	6.1	2,250	116
February	15	725	5.8	2,070	105
March	20	2,690	7.3	2,580	51
April	21	1,800	33	2,220	16
May	24	5.5	32	14	85
June	.5	300	25	308	86
July	23	1,980	8.5	2,280	43
August	19	1,970	6.1	2,420	53
September	11	1,750	8.5	2,090	15
WTR YR 1972	212	11,710	177	20,550	936

Month	Wellton-Mohawk Main Outlet Drain 09529300	Main Outlet Drain above Gila River 09529350	South Gila Pump Outlet Channel No. 1 09529360	South Gila Drain No. 2 09529400	South Gila Terminal wasteway 09529420
October	18,680	18,520	2,790	1.8	70
November	18,600	18,210	2,750	3.0	66
December	18,850	18,860	1,810	6.1	33
CAL YR 1971	215,300	212,100	28,490	65	877
January	18,690	18,500	1,810	11	38
February	16,740	16,620	1,900	12	58
March	18,170	17,830	2,770	12	40
April	17,330	16,910	2,570	7.5	50
May	17,010	16,670	1,260	6.1	62
June	12,910	12,630	1,850	6.0	69
July	18,440	17,440	2,940	0	36
August	18,400	17,910	2,830	0	43
September	17,940	17,730	2,730	0	52
WTR YR 1972	211,800	207,800	28,010	66	618

NOTE.--Yearly totals given above have been computed from total cfs-days and may differ slightly from the summation of monthly total acre-feet on occasion.

Return surface flows below Imperial Dam, Ariz.-Calif.--Continued

MONTHLY RETURN FLOWS, IN ACRE-FEET, WATER YEAR OCTOBER 1971 TO SEPTEMBER 1972

Month	South Gila Pump Outlet Channel No. 4 09529440	Reservation Drain No. 7 09529600	Reservation Main Drain No. 6 09529700	Reservation Drain No. 2 09529800	Reservation Drain No. 3 09529900	Reservation Main Drain No. 4 09530000
October	40	69	1,030	33	252	3,860
November	.2	60	928	24	214	3,520
December	195	55	780	22	195	3,210
CAL YR 1971	5,050	831	10,760	337	2,870	38,460
January	139	55	793	22	187	2,970
February	388	56	785	23	197	2,720
March	759	58	865	28	251	3,200
April	920	67	910	32	273	3,340
May	26	115	1,040	37	284	3,860
June	177	115	1,030	29	256	3,190
July	1,110	103	984	24	249	3,220
August	1,130	104	1,020	26	234	2,950
September	311	81	998	24	228	3,160
WTR YR 1972	5,200	938	11,160	324	2,820	39,190

Month	Yuma Mesa Outlet Drain 09530200	Reservation Drain No. 11 09530400	Drain 8-B 09530500	M.O.D.E. 2 (above Morelos Dam) 09531800	Cooper wasteway 09531850	M.O.D.E. 3 (below Morelos Dam) 09531900
October	157	63	235	0	64	18,740
November	313	17	190	0	84	18,340
December	0	12	137	7,720	34	11,050
CAL YR 1971	1,750	258	1,720	103,500	932	101,700
January	336	6.7	104	3,630	65	14,860
February	748	5.8	76	5,180	49	11,470
March	855	4.8	95	16,380	42	1,460
April	364	6.0	109	15,920	52	768
May	0	6.1	109	7,770	40	8,560
June	155	2.8	95	8,980	44	3,650
July	3,310	0	114	0	47	17,420
August	6,000	.6	129	0	24	17,900
September	5,880	23	163	0	29	17,750
WTR YR 1972	18,110	148	1,560	65,590	574	142,000

Month	Eleven Mile wasteway 09532500	Twenty-one Mile wasteway 09533000	Main Drain 09534000	West Main Canal wasteway 09534300	East Main Canal wasteway 09534500
October	184	39	11,830	422	410
November	216	65	11,050	541	491
December	259	0	10,160	390	292
CAL YR 1971	2,450	599	132,300	3,080	4,450
January	129	0	10,350	237	280
February	193	0	10,290	512	298
March	145	60	11,210	401	336
April	162	37	11,060	341	317
May	16	3.0	11,600	333	392
June	175	57	10,790	253	341
July	20	3.0	10,790	315	327
August	226	1.0	10,600	536	296
September	19	0	9,920	568	283
WTR YR 1972	1,740	265	129,600	4,850	4,060

NOTE.--Yearly totals given above have been computed from total cfs-days and may differ slightly from the summation of monthly total acre-feet on occasion.

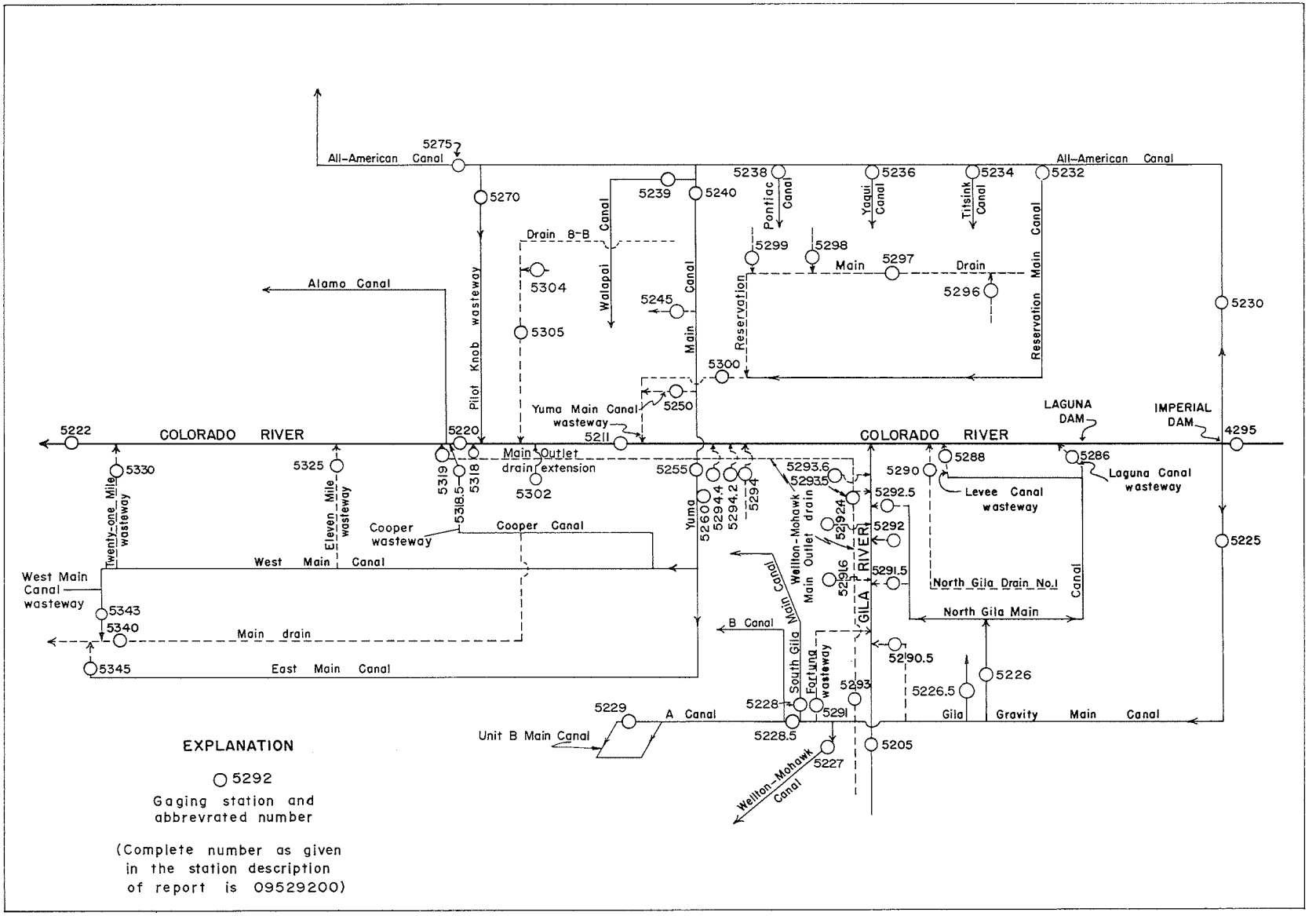

Figure 2.--Schematic diagram showing gaging stations on streams, diversions, and return flows between Imperial Dam and the southerly international boundary

10250600 WILDROSE CREEK NEAR WILDROSE STATION, CALIF.
(Hydrologic bench-mark station)

LOCATION.--Lat 36°15'54", long 117°10'40", (unsurveyed), Inyo County, Death Valley National Monument, on left bank 0.4 mile east of Wildrose Range headquarters, 2 miles east of Wildrose Spring, and 2.5 miles east of Wildrose Station.

DRAINAGE AREA.--23.7 sq mi.

PERIOD OF RECORD.--October 1960 to current year. Weather records since June 1964.

INSTRUMENTATION.--Water-stage recorder with rain-gage attachment at altitude of 4,300 ft (from topographic map). Recording and storage-type precipitation gages, recording anemometer, and maximum-minimum thermometer at altitude of 9,990 ft; similar instruments and 24-inch screened evaporation pan at altitude of 5,750 ft; recording rain gages at altitudes of 7,200, 6,400, 5,300, and 5,200 ft; flowmeter recording ground-water withdrawals at altitude of 4,300 ft. (Oct. 1 to Mar. 28.)

AVERAGE DISCHARGE.--12 years, 0.023 cfs (17 acre-ft per year); median of yearly mean discharges, 0.0006 cfs (0.4 acre-ft per year).

EXTREMES.--Current year: Maximum discharge, 0.33 cfs Dec. 25 (gage height, 0.37 ft); no flow all year except Dec. 25-27.
Period of record: Maximum discharge, 1,060 cfs Sept. 4, 1967 (gage height, 6.24 ft), on basis of slope-area measurement of maximum flow; no flow all or most of each year.

REMARKS.--Records poor. No regulation or diversion above station except spring diversion to ranger headquarters.

Period	Pan evaporation (inches)	Temperature (°C) at altitude: 9,990 ft Maximum	9,990 ft Minimum	5,750 ft Maximum	5,750 ft Minimum	Ground water (acre-feet) 4,300 ft
July 27 to Nov. 2	34.14	29.4	-6.7	15.6	-6.7	3.51
Nov. 2 to Jan. 26	4.74	-	-	13.3	-4.4	2.99
Jan. 26 to Mar. 28	10.53	-	-	16.7	-5.6	2.30
Mar. 28 to June 15	22.15	-	-	29.4	4.4	-
June 15 to Aug. 16	27.65	28.9	3.3	35.0	10.0	-

Precipitation (inches) at location and altitude:

Month	117°05'05" 36°13'05" 9,990 ft	117°04'15" 36°15'30" 7,200 ft	117°06'50" 36°13'55" 6,400 ft	117°06'40" 36°15'10" 5,750 ft	117°08'10" 36°16'15" 5,300 ft	117°09'50" 36°14'45" 5,200 ft	117°10'40" 36°15'55" 4,300 ft
October 1971.....	0	0	0	0	0	0	0.1
November.....	.05	.30	.12	0	.02	.04	0
December.....	.79	2.48	3.34	1.30	2.44	3.54	3.3
CAL YR 1971.....	2.07	4.82	6.01	2.28	3.54	5.64	5.1
January 1972.....	.10	.30	0	0	0	0	0
February.....	.33	.02	0	0	0	0	0
March.....	0	0	0	0	0	0	0
April.....	0	.39	.34	.10	.05	.22	.2
May.....	.02	.09	.05	.08	0	0	0
June.....	1.84	1.64	1.70	1.68	.21	.12	.1
July.....	0	0	0	0	0	0	0
August.....	0	0	.04	.10	.01	.31	.2
September.....	0	.21	.99	.28	.02	0	0
WTR YR 1972.....	3.13	5.43	6.58	3.54	2.75	4.23	3.9

Average Wind Velocity (mph) at location and altitude:

Month	117°05'05", 36°13'05" 9,990 ft	117°06'40", 36°15'10" 5,750 ft
October 1971....	8.68	5.86
November.....	12.03	5.08
December.....	11.56	4.99
January 1972....	14.27	4.93
February.....	11.70	5.62
March.....	10.33	5.65
April.....	12.17	6.01
May.....	6.69	6.07
June.....	6.36	5.98
July.....	8.65	5.50
August.....	6.37	5.71
September.....	7.58	5.78

10250600 WILDROSE CREEK NEAR WILDROSE STATION, CALIF.--Continued

DISCHARGE, IN CUBIC FEET PER SECOND, WATER YEAR OCTOBER 1971 TO SEPTEMBER 1972

DAY	OCT	NOV	DEC	JAN	FEB	MAR	APR	MAY	JUN	JUL	AUG	SEP
1			0									
2			0									
3			0									
4			0									
5			0									
6			0									
7			0									
8			0									
9			0									
10			0									
11			0									
12			0									
13			0									
14			0									
15			0									
16			0									
17			0									
18			0									
19			0									
20			0									
21			0									
22			0									
23			0									
24			0									
25			.01									
26			.22									
27			.06									
28			0									
29			0									
30			0		------							
31		------	0		------		------		------			------
TOTAL	0	0	.29	0	0	0	0	0	0	0	0	0
MEAN	0	0	.009	0	0	0	0	0	0	0	0	0
MAX	0	0	.22	0	0	0	0	0	0	0	0	0
MIN	0	0	0	0	0	0	0	0	0	0	0	0
AC-FT	0	0	.6	0	0	0	0	0	0	0	0	0

CAL YR 1971 TOTAL 0.29 MEAN .0008 MAX .22 MIN 0 AC-FT .6
WTR YR 1972 TOTAL 0.29 MEAN .0008 MAX .22 MIN 0 AC-FT .6

PEAK DISCHARGE (BASE, 5.0 CFS).--No peak above base.

19S/44E-23K1. U.S. Geological Survey observation well drilled in alluvium to bedrock. Diameter 1¼ inches. Depth 30.0 ft. LSD 4,320 ft above MSL.

HIGHEST WATER LEVEL.--24.37 ft below LSD, Feb. 17, 1969.

LOWEST STATIC WATER LEVEL.--26.59 ft below LSD, Apr. 28, 1971.

PERIOD OF RECORD.--February 1969 to current year.

Date	Water level	Date	Water level	Date	Water level	Date	Water level
Nov. 3, 1971	26.54	Mar. 28, 1972	26.43	June 14, 1972	26.43	Aug. 16, 1972	26.40
Jan. 26, 1972	26.42						

10250800 DARWIN CREEK NEAR DARWIN, CALIF.

LOCATION.--Lat 36°19'14", long 117°31'23", in NW¼SE¼SW¼ sec.34, T.18 S., R.41 E., Inyo County, on left bank 510 ft downstream from Darwin Falls, 1.6 miles upstream from unnamed tributary, and 5.2 miles northeast of Darwin.

DRAINAGE AREA.--173 sq mi.

PERIOD OF RECORD.--October 1962 to current year.

GAGE.--Water-stage recorder. Altitude of gage is 2,640 ft (from topographic map). U.S. Weather Bureau nonrecording rain gage at Darwin. Prior to Aug. 6, 1970, at site 190 ft downstream at same datum.

AVERAGE DISCHARGE.--10 years, 0.52 cfs (377 acre-ft per year); median of yearly mean discharges, 0.3 cfs (217 acre-ft per year).

EXTREMES.--Current year: Maximum discharge, 213 cfs June 7 (gage height, 5.49 ft); minimum daily, 0.09 cfs Oct. 1-10.

Period of record: Maximum discharge, 4,400 cfs Jan. 25, 1969 (gage height, 8.40 ft, at site then in use, from floodmarks), on basis of slope-conveyance measurement of maximum flow; maximum gage height, 20.42 ft, present site from floodmarks, date and discharge unknown; minimum daily discharge, 0.05 cfs Aug. 30 to Sept. 4, 1969.

REMARKS.--Records good. No regulation above station. Town of Darwin pumps water above station for municipal supply.

DISCHARGE, IN CUBIC FEET PER SECOND, WATER YEAR OCTOBER 1971 TO SEPTEMBER 1972

DAY	OCT	NOV	DEC	JAN	FEB	MAR	APR	MAY	JUN	JUL	AUG	SEP
1	.09	.12	.16	.24	.18	.16	.16	.10	.14	.15	.12	.10
2	.09	.12	.16	.24	.18	.16	.16	.10	.14	.15	.12	.10
3	.09	.14	.16	.24	.18	.16	.16	.12	.14	.15	.12	.10
4	.09	.14	.16	.24	.18	.16	.16	.12	.14	.15	.12	.10
5	.09	.14	.18	.24	.18	.16	.16	.14	.14	.15	.12	.10
6	.09	.14	.18	.24	.18	.16	.16	.14	.14	.14	.12	.10
7	.09	.14	.18	.21	.18	.16	.14	.16	9.6	.14	.12	.10
8	.09	.14	.18	.21	.18	.16	.14	.14	.41	.14	.12	.12
9	.09	.14	.16	.21	.18	.16	.16	.14	.30	.14	.12	.12
10	.09	.16	.16	.21	.18	.16	.16	.14	.24	.14	.12	.14
11	.10	.16	.16	.21	.16	.16	.18	.14	.21	.14	.12	.14
12	.10	.16	.14	.21	.16	.16	.18	.14	.20	.14	.12	.16
13	.10	.16	.14	.21	.16	.14	.18	.14	.19	.14	.12	.16
14	.10	.18	.14	.21	.16	.16	.16	.12	.19	.14	.12	.14
15	.10	.18	.14	.21	.16	.18	.16	.12	.18	.14	.12	.18
16	.10	.18	.14	.21	.16	.16	.18	.12	.18	.13	.12	.18
17	.10	.18	.14	.21	.14	.16	.18	.14	.18	.13	.12	.24
18	.10	.18	.14	.21	.14	.16	.18	.14	.18	.13	.10	.24
19	.10	.18	.14	.18	.14	.16	.18	.14	.17	.13	.10	.24
20	.10	.18	.16	.18	.14	.16	.18	.14	.17	.13	.10	.21
21	.11	.16	.18	.18	.14	.16	.16	.16	.17	.13	.10	.21
22	.11	.16	.24	.18	.16	.16	.16	.16	.17	.13	.10	.18
23	.11	.14	.21	.18	.16	.18	.14	.16	.17	.13	.10	.21
24	.11	.14	.30	.18	.16	.18	.14	.14	.16	.13	.10	.24
25	.11	.14	.24	.18	.16	.18	.14	.14	.16	.13	.12	.24
26	.11	.14	.18	.18	.16	.18	.14	.14	.16	.13	.12	.24
27	.11	.14	.30	.18	.16	.18	.14	.14	.16	.13	.10	.24
28	.12	.14	.24	.18	.16	.18	.12	.14	.16	.13	.10	.24
29	.12	.14	.24	.18	.16	.18	.12	.14	.16	.13	.10	.22
30	.12	.14	.24	.18	------	.21	.12	.14	.15	.13	.10	.22
31	.12	------	.24	.18	------	.18	------	.14	------	.13	.10	------
TOTAL	3.15	4.56	5.73	6.30	4.74	5.17	4.70	4.24	14.86	4.23	3.48	5.21
MEAN	.10	.15	.18	.20	.16	.17	.16	.14	.50	.14	.11	.17
MAX	.12	.18	.30	.24	.18	.21	.18	.16	9.6	.15	.12	.24
MIN	.09	.12	.14	.18	.14	.14	.12	.10	.14	.13	.10	.10
AC-FT	6.3	9.0	11	13	9.4	10	9.3	8.4	29	8.4	6.9	10
(a)	0	.01	1.11	0	0	0	0	.03	.55	0	0	.01

CAL YR 1971 TOTAL 53.27 MEAN .15 MAX .41 MIN .05 AC-FT 106
WTR YR 1972 TOTAL 66.37 MEAN .18 MAX 9.6 MIN .09 AC-FT 132

PEAK DISCHARGE (BASE, 10 CFS).--June 7 (1400) 213 cfs (5.49 ft).

a Precipitation, in inches.

10251300 AMARGOSA RIVER AT TECOPA, CALIF.

LOCATION.--Lat 35°50'53", long 116°13'43", in NW¼NW¼SE¼ sec.9, T.20 N., R.7 E., Inyo County, on right bank 20 ft upstream from county road, and 0.2 mile west of Tecopa.

PERIOD OF RECORD.--October 1961 to current year.

GAGE.--Water-stage recorder and concrete-culvert control. Altitude of gage is 1,310 ft (from topographic map).

AVERAGE DISCHARGE.--11 years, 2.48 cfs (1,800 acre-ft per year); median of yearly mean discharges, 1.0 cfs (720 acre-ft per year).

EXTREMES.--Current year: Maximum discharge, 146 cfs Sept. 18 (gage height, 3.08 ft); no flow Oct. 1 to Nov. 2, Aug. 1-17, 19, and Sept. 28-30.
Period of record: Maximum discharge, 5,000 cfs (estimated) Feb. 26, 1969 (gage height, 18.34 ft, from floodmark); no flow many days in most years.

REMARKS.--Records good.

DISCHARGE, IN CUBIC FEET PER SECOND, WATER YEAR OCTOBER 1971 TO SEPTEMBER 1972

DAY	OCT	NOV	DEC	JAN	FEB	MAR	APR	MAY	JUN	JUL	AUG	SEP
1		0	1.2	.91	1.3	1.0	.60	.14	.05	.03	0	.01
2		0	1.0	.75	1.2	.90	.63	.17	.05	.03	0	.02
3		.01	.91	1.3	.95	1.0	.66	.17	.05	.03	0	.01
4		.02	1.2	1.6	1.2	1.2	.66	.14	.04	.03	0	.02
5		.12	1.1	1.5	1.6	1.1	.70	.11	.05	.03	0	.01
6		.31	.86	1.5	1.4	1.1	.56	.11	.07	.02	0	.01
7		.38	1.3	1.4	1.5	1.2	.56	.10	.07	.02	0	.01
8		.40	.67	1.5	1.5	1.1	.60	.09	.07	.02	0	.02
9		.61	.55	1.6	1.5	1.1	.50	.09	.07	.02	0	.02
10		.82	.75	1.5	1.4	1.0	.39	.09	.07	.02	0	.01
11		.91	1.1	1.5	1.3	.88	.59	.07	.07	.02	0	.02
12		.95	1.1	1.1	1.2	.96	.58	.07	.07	.02	0	.02
13		.75	1.5	1.1	1.4	1.1	.45	.07	.07	.02	0	.02
14		.78	1.2	1.3	1.5	1.1	.51	.07	.07	.02	0	.02
15		.87	.96	1.4	1.5	.90	.40	.08	.07	.02	0	.02
16		.64	1.0	1.4	1.4	.77	.43	.07	.06	.01	0	.02
17		.48	1.1	1.5	1.2	.78	.31	.06	.06	.01	0	.02
18		.44	1.3	1.5	1.3	.85	.33	.06	.06	.01	.01	16
19		.45	1.3	1.5	1.4	.84	.44	.07	.06	.01	0	23
20		.56	1.3	1.5	1.3	.75	.53	.08	.06	.01	.01	1.9
21		.54	1.4	1.3	1.3	.70	.51	.10	.05	.01	.01	1.1
22		.66	1.8	1.1	1.2	.63	.49	.15	.05	.01	.01	.37
23		.81	1.7	1.1	1.2	.53	.49	.15	.05	.01	.01	.06
24		.91	4.2	1.0	1.3	.64	.33	.14	.05	.01	.01	.01
25		.95	4.9	.95	1.4	.63	.23	.11	.05	.01	.01	.01
26		1.0	1.8	.90	1.5	.40	.17	.10	.04	.01	.01	.01
27		1.1	1.9	.85	1.4	.45	.16	.10	.04	.01	.01	.01
28		1.0	2.0	.98	1.3	.50	.18	.08	.04	.01	.01	0
29		1.0	1.7	1.5	1.0	.62	.14	.08	.04	.01	.01	0
30		1.1	1.3	1.2	------	.59	.15	.06	.04	.01	.02	0
31		------	1.3	.90	------	.52	------	.05	------	.01	.02	------
TOTAL	0	18.57	45.40	39.14	38.65	25.84	13.28	3.03	1.69	.51	.15	42.75
MEAN	0	.62	1.46	1.26	1.33	.83	.44	.098	.056	.017	.005	1.43
MAX	0	1.1	4.9	1.6	1.6	1.2	.70	.17	.07	.03	.02	23
MIN	0	0	.55	.75	.95	.40	.14	.05	.04	.01	0	0
AC-FT	0	37	90	78	77	51	26	6.0	3.4	1.0	.3	85

CAL YR 1971 TOTAL 216.52 MEAN .59 MAX 4.9 MIN 0 AC-FT 429
WTR YR 1972 TOTAL 229.01 MEAN .63 MAX 23 MIN 0 AC-FT 454

PEAK DISCHARGE (BASE, 15 CFS).--Sept. 18 (2300) 146 cfs (3.08 ft).

10252300 CHINA SPRING CREEK NEAR MOUNTAIN PASS, CALIF.

LOCATION.--Lat 35°28'07", long 115°30'29", in E½ sec.31, T.16 N., R.14 E., San Bernardino County, on upstream right bank of State highway culvert on U.S. Highways 466 and 91, and 2.0 miles east of Mountain Pass.

DRAINAGE AREA.--0.94 sq mi.

PERIOD OF RECORD.--January 1959 to current year.

GAGE.--Water-stage recorder with rain-gage attachment. Culvert control since Oct. 9, 1963. Altitude of gage is 4,400 ft (from topographic map). Prior to Oct. 9, 1963, at different datum.

AVERAGE DISCHARGE.--13 years (1960-72), 0.0009 cfs (0.7 acre-ft per year); median of yearly mean discharges, zero.

EXTREMES.--Current year: No flow during year.
Period of record: Maximum discharge, 113 cfs Aug. 5, 1964 (gage height, 2.75 ft), by computation of maximum flow through culvert; no flow most years.

REMARKS.--No flow since Aug. 29, 1971. No regulation or diversion above station. Monthly precipitation, in inches, is as follows: November, 0.1; December, 0.5; April, 0.1; June, 0.9; August, 1.0; September, 0.4; the water year, 3.0; Figures for the calendar year 1971 are as follows: Maximum discharge, 0.99 cfs; minimum, zero; mean, 0.003; runoff, 2.0 acre-ft.

10252550 CARUTHERS CREEK NEAR IVANPAH, CALIF.

LOCATION.--Lat 35°14'33", long 115°17'58", in NW¼NW¼NE¼ sec.6, T.13 N., R.16 E., San Bernardino County, on left bank 6.6 miles south of Ivanpah.

DRAINAGE AREA.--1.13 sq mi.

PERIOD OF RECORD.--October 1963 to current year.

GAGE.--Water-stage recorder. Altitude of gage is 5,640 ft (from topographic map).

AVERAGE DISCHARGE.--9 years, 0.076 cfs (55 acre-ft per year).

EXTREMES.--Current year: Maximum discharge, 6.2 cfs June 7 (gage height, 1.67 ft); no flow most of year. Period of record: Maximum discharge, 518 cfs Aug. 25, 1969 (gage height, 4.77 ft), on basis of slope-conveyance measurement of maximum flow; no flow most of each year.

REMARKS.--Records good. No regulation or diversion above station.

DISCHARGE, IN CUBIC FEET PER SECOND, WATER YEAR OCTOBER 1971 TO SEPTEMBER 1972

DAY	OCT	NOV	DEC	JAN	FEB	MAR	APR	MAY	JUN	JUL	AUG	SEP
1			0	.65					0			
2			0	.65					0			
3			0	.44					0			
4			0	.27					0			
5			0	.35					0			
6			0	.10					0			
7			0	0					1.6			
8			0	0					.01			
9			0	0					0			
10			0	0					0			
11			0	0					0			
12			0	0					0			
13			0	0					0			
14			0	0					0			
15			0	0					0			
16			0	0					0			
17			0	0					0			
18			0	0					0			
19			0	0					0			
20			0	0					0			
21			0	0					0			
22			0	0					0			
23			0	0					0			
24			.12	0					0			
25			.20	0					0			
26			2.4	0					0			
27			1.5	0					0			
28			1.3	0					0			
29			1.0	0					0			
30			1.0	0	------				0			
31		------	1.0	0	------		------		------			------
TOTAL	0	0	8.52	2.46	0	0	0	0	1.61	0	0	0
MEAN	0	0	.27	.079	0	0	0	0	.054	0	0	0
MAX	0	0	2.4	.65	0	0	0	0	1.6	0	0	0
MIN	0	0	0	0	0	0	0	0	0	0	0	0
AC-FT	0	0	17	4.9	0	0	0	0	3.2	0	0	0

CAL YR 1971 TOTAL 23.65 MEAN .065 MAX 3.9 MIN 0 AC-FT 47
WTR YR 1972 TOTAL 12.59 MEAN .034 MAX 2.4 MIN 0 AC-FT 25

PEAK DISCHARGE (BASE, 10 CFS).--No peak above base.

10254005 SALTON SEA NEAR WESTMORLAND, CALIF.

LOCATION.--Lat 33°11'37", long 115°49'54", in NE¼SE¼SW¼ sec.21, T.11 S., R.11 E., Imperial County, at outer end of third mooring pier from western shore at Sandy Beach, and 15.5 miles northwest of Westmorland.

DRAINAGE AREA.--8,360 sq mi, approximately.

PERIOD OF RECORD.--November 1904 to current year. Records prior to 1932 are published in WSP 735.

GAGE.--Water-stage recorder. Datum of gage is 250.00 ft below mean sea level; gage readings have been converted to elevations below mean sea level. See WSP 1734 for history of changes prior to Mar. 2, 1956.

EXTREMES.--Current year: Maximum elevation, 231.4 ft below mean sea level on many days; minimum, 232.6 ft below mean sea level Oct. 19 to Nov. 13.
Period of record: Maximum elevation, 195.9 ft below mean sea level in February and March 1907; minimum since 1906, 251.6 ft below mean sea level in November 1924.

REMARKS.--Bottom of sea is 277.7 ft below mean sea level. See WSP 300, 735, and 918 for condensed history of Salton Sea.

MONTHEND ELEVATIONS, IN FEET, BELOW MEAN SEA LEVEL, WATER YEAR OCTOBER 1971 TO SEPTEMBER 1972

Date	Elevation (feet)	Date	Elevation (feet)
Sept. 30	232.5	Apr. 30	231.4
Oct. 31	232.6	May 31	231.4
Nov. 30	232.5	June 30	231.6
Dec. 31	232.3	July 31	231.8
Jan. 31	232.0	Aug. 31	232.1
Feb. 29	231.6	Sept. 30	232.3
Mar. 31	231.4		

INFLOW TO SALTON SEA, CALIF.

Salton Sea, located near the northeast corner of Imperial County, is a closed basin consisting of 8,360 sq mi. The following table shows monthly and annual inflow, in acre-feet, for the water year October 1971 to September 1972 and the calendar year January to December 1971. Inflow from Imperial Valley is the sum of flows in Alamo River (see sta 10254730), New River (see sta 10255550), 22 drains and wasteways, and since October 1967 San Felipe Creek (see sta 10255885). Since October 1967 inflow from Coachella Valley is the sum of flows in Whitewater River (see sta 10259540), Salt Creek (see sta 10254050), and 20 drains. Flow in Whitewater River and Salt Creek was measured at gaging stations, that for the drains was furnished by Coachella County Water District (see Salton Sea basin for other flows to the sea). Table also shows amount of flow in Alamo and New Rivers contributed by Mexico as furnished by Imperial Irrigation District.

	OCT	NOV	DEC	JAN	FEB	MAR	APR	MAY	JUN	JUL	AUG	SEP
Inflow from												
Imperial Valley	111,800	86,210	83,030	94,210	96,630	113,700	114,400	103,000	87,230	87,720	85,940	99,620
Coachella Valley	11,540	10,250	12,240	12,690	12,310	12,820	12,350	13,390	12,770	12,460	12,510	13,160

TOTAL CAL YR 1971 1,323,000 AC-FT
TOTAL WTR YR 1972 1,312,000 AC-FT

FLOW FROM MEXICO AT INTERNATIONAL BOUNDARY

Alamo River	157	145	137	147	127	157	137	98	102	83	109	83
New River	9,000	7,680	7,810	9,280	8,280	9,870	10,630	9,000	7,650	7,690	9,180	7,860

CAL YR 1971: Alamo River 1,510 AC-FT WTR YR 1972: 1,480 AC-FT
CAL YR 1971: New River 107,300 AC-FT WTR YR 1972: 103,900 AC-FT

10254050 SALT CREEK NEAR MECCA, CALIF.

LOCATION.--Lat 33°26'49", long 115°50'33", in NE¼SE¼SW¼ sec.28, T.8 S., R.11 E., Riverside County, on pier of Southern Pacific Railroad bridge, 0.3 mile upstream from mouth, and 16 miles southeast of Mecca.

DRAINAGE AREA.--269 sq mi.

PERIOD OF RECORD.--January 1961 to current year.

GAGE.--Water-stage recorder. Altitude of gage is 230 ft below mean sea level (from topographic map).

AVERAGE DISCHARGE.--11 years, 5.61 cfs (4,060 acre-ft per year).

EXTREMES.--Current year: Maximum discharge, 38 cfs Jan. 2 or 3 (gage height, 5.26 ft); minimum daily, 0.67 cfs July 17.
Period of record: Maximum discharge, 1,260 cfs Aug. 10, 1971 (gage height, 6.92 ft), from rating curve extended above 25 cfs on basis of slope-area measurement at gage height 6.62 ft; minimum daily, 0.40 cfs Aug. 10, 1966.

REMARKS.--Records good except those for period of no gage-height record, which are poor. No regulation or diversion above station. Flow sustained by irrigation seepage.

DISCHARGE, IN CUBIC FEET PER SECOND, WATER YEAR OCTOBER 1971 TO SEPTEMBER 1972

DAY	OCT	NOV	DEC	JAN	FEB	MAR	APR	MAY	JUN	JUL	AUG	SEP
1	2.9	3.7	5.6	7.5	7.9	7.4	4.7	2.9	1.7	1.4	.74	3.0
2	2.6	6.0	4.8	8.0	8.2	6.9	5.0	2.8	1.7	1.3	.74	2.4
3	2.6	8.2	4.7	18	7.6	6.7	5.0	2.7	1.8	1.3	1.1	2.4
4	2.4	4.2	4.0	8.0	7.4	6.9	5.0	2.8	1.9	1.3	1.4	2.4
5	2.4	3.9	3.9	7.8	7.9	6.9	12	2.8	1.9	1.1	1.5	2.4
6	2.4	4.2	3.9	7.6	7.9	6.9	5.6	2.7	1.8	1.1	1.6	2.4
7	2.3	3.9	4.2	7.6	7.6	6.7	3.7	2.8	1.8	1.3	1.6	2.4
8	2.6	3.9	4.8	7.6	9.0	6.5	3.4	3.0	2.0	1.4	1.6	2.4
9	2.3	3.9	4.4	7.6	8.4	6.5	3.4	3.1	2.2	1.4	1.7	2.4
10	2.3	4.2	4.7	7.6	7.9	6.3	3.4	3.1	2.1	1.4	1.8	2.6
11	2.6	4.2	5.0	7.6	7.6	6.3	3.4	2.9	2.0	1.3	1.8	2.7
12	2.7	4.4	5.2	7.6	7.1	6.0	3.4	2.8	1.9	1.3	1.8	2.7
13	2.7	4.4	5.4	7.6	6.7	6.0	3.4	2.6	1.8	1.4	1.9	2.7
14	2.8	4.0	9.0	7.6	6.7	6.0	3.6	2.4	1.8	1.4	1.9	2.7
15	2.2	3.6	6.0	7.6	6.7	6.0	3.3	2.2	1.8	1.1	1.9	2.7
16	1.9	3.4	6.5	7.6	7.1	5.6	3.3	2.2	1.8	.82	1.9	2.7
17	2.0	3.4	8.4	7.6	7.1	5.6	3.4	2.2	1.7	.67	2.0	2.7
18	2.6	3.6	6.9	7.8	7.1	5.6	3.3	2.1	1.4	.74	2.0	2.8
19	2.9	4.2	6.9	7.9	7.4	5.6	3.4	2.2	1.0	.78	2.1	2.8
20	2.8	4.2	6.7	7.6	7.6	5.6	4.2	2.4	.82	.92	2.1	2.7
21	2.9	5.0	6.7	7.6	7.6	5.6	3.6	2.1	1.0	1.1	2.1	2.7
22	3.1	4.7	6.7	7.6	7.6	5.6	3.4	1.8	1.1	1.2	2.1	2.7
23	3.1	5.2	6.9	7.6	7.9	5.4	3.4	2.1	1.2	1.3	2.0	2.8
24	3.3	5.4	7.0	7.6	7.6	5.0	3.4	1.8	1.2	1.4	2.0	2.9
25	3.1	4.0	7.2	7.6	7.4	5.0	3.3	1.4	1.3	1.4	2.1	3.0
26	3.4	4.2	7.2	7.4	7.4	5.0	3.3	1.4	1.3	1.4	1.6	3.1
27	3.7	4.5	7.2	7.6	7.6	5.0	3.0	1.7	1.4	1.3	1.8	3.1
28	3.6	4.5	7.2	7.4	7.4	5.0	2.9	2.1	1.4	1.3	2.1	3.3
29	3.6	5.2	7.2	7.4	7.4	4.7	2.9	1.8	1.4	1.4	2.2	3.4
30	3.4	8.7	7.2	8.4	------	4.8	2.9	1.6	1.4	1.4	2.4	3.3
31	3.4	------	7.2	9.0	------	4.7	------	1.6	------	1.1	2.9	------
TOTAL	86.6	136.9	188.7	249.0	218.8	181.8	118.0	72.1	47.62	37.73	56.48	82.3
MEAN	2.79	4.56	6.09	8.03	7.54	5.86	3.93	2.33	1.59	1.22	1.82	2.74
MAX	3.7	8.7	9.0	18	9.0	7.4	12	3.1	2.2	1.4	2.9	3.4
MIN	1.9	3.4	3.9	7.4	6.7	4.7	2.9	1.4	.82	.67	.74	2.4
AC-FT	172	272	374	494	434	361	234	143	94	75	112	163

CAL YR 1971 TOTAL 1,678.70 MEAN 4.60 MAX 132 MIN .80 AC-FT 3,330
WTR YR 1972 TOTAL 1,476.03 MEAN 4.03 MAX 18 MIN .67 AC-FT 2,930

NOTE.--No gage-height record Dec. 24 to Jan. 19.

10254730 ALAMO RIVER NEAR NILAND, CALIF.

LOCATION.--Lat 33°12'03", long 115°36'07", in NE¼SW¼NE¼ sec.22, T.11 S., R.13 E., Imperial County, on left bank 0.6 mile upstream from mouth, and 5.8 miles southwest of Niland.

PERIOD OF RECORD.--January 1943 to current year. Monthly discharge only for January 1943 to September 1960, published in WSP 1734.

GAGE.--Water-stage recorder. Altitude of gage is 235 ft below mean sea level (from topographic map).

EXTREMES.--Period of record: Maximum daily discharge, 2,080 cfs Nov. 27, 1967; minimum daily, 288 cfs Jan. 2, 1966.

REMARKS.--Discharge represents seepage and return flow from irrigated areas.

COOPERATION.--Records furnished by Imperial Irrigation District and reviewed by Geological Survey.

DISCHARGE, IN CUBIC FEET PER SECOND, WATER YEAR OCTOBER 1971 TO SEPTEMBER 1972

DAY	OCT	NOV	DEC	JAN	FEB	MAR	APR	MAY	JUN	JUL	AUG	SEP
1	1,290	885	705	766	856	885	1,140	965	955	829	809	710
2	1,270	903	677	691	856	852	1,110	960	875	809	738	667
3	1,390	800	714	672	866	871	1,130	970	847	790	743	705
4	1,300	766	776	700	927	922	1,140	998	847	786	752	747
5	1,170	781	738	729	951	946	1,140	989	866	776	809	771
6	1,110	819	814	795	965	960	1,100	1,010	861	747	842	686
7	1,070	847	885	847	989	965	1,090	975	833	795	842	729
8	1,120	866	871	866	1,060	1,000	1,090	989	861	800	809	762
9	1,140	885	885	847	951	1,020	1,040	975	875	805	847	809
10	1,140	903	885	819	932	1,060	1,110	922	880	856	847	833
11	1,120	875	838	861	936	1,070	1,120	899	833	833	766	922
12	1,130	885	786	889	913	1,090	1,100	932	819	819	743	960
13	1,120	866	805	894	899	1,090	1,080	975	805	814	762	965
14	1,120	871	714	913	871	1,110	1,100	936	795	823	743	1,030
15	1,120	829	686	885	875	1,140	1,040	908	766	814	714	1,000
16	1,110	852	686	805	885	1,110	1,030	894	738	786	672	1,050
17	1,140	847	705	861	955	1,070	1,010	894	747	786	658	1,080
18	1,120	847	757	880	960	1,100	1,020	899	738	809	696	1,130
19	1,120	871	738	856	936	1,110	1,020	899	766	800	719	1,260
20	1,100	875	705	899	913	1,040	1,060	922	766	776	677	1,060
21	1,030	880	752	880	994	1,070	1,060	955	714	752	677	1,120
22	1,040	889	819	885	998	1,080	1,140	936	729	757	700	1,230
23	965	805	838	913	899	1,060	1,090	913	747	752	710	1,180
24	951	776	823	852	903	1,060	1,050	894	776	771	719	1,140
25	951	733	700	880	894	1,080	1,010	880	757	790	762	1,180
26	1,010	714	601	875	927	1,100	955	885	790	762	714	1,140
27	913	781	558	842	932	1,030	979	871	790	766	724	1,130
28	852	771	710	814	927	1,040	1,010	880	766	786	710	1,130
29	838	702	733	814	917	1,060	1,040	861	786	795	714	1,160
30	823	795	738	809	------	1,100	1,000	889	771	805	786	1,090
31	795	------	757	823	------	1,090	------	932	------	833	781	------
TOTAL	33,368	24,919	23,399	25,862	26,887	32,181	32,004	28,807	24,099	24,622	23,185	29,376
MEAN	1,076	831	755	834	927	1,038	1,067	929	803	794	748	979
MAX	1,390	903	885	913	1,060	1,140	1,140	1,010	955	856	847	1,260
MIN	795	702	558	672	856	852	955	861	714	747	658	667
AC-FT	66,190	49,430	46,410	51,300	53,330	63,830	63,480	57,140	47,800	48,840	45,990	58,270

CAL YR 1971 TOTAL 338,651 MEAN 928 MAX 1,640 MIN 549 AC-FT 671,700
WTR YR 1972 TOTAL 328,709 MEAN 898 MAX 1,390 MIN 558 AC-FT 652,000

10255550 NEW RIVER NEAR WESTMORLAND, CALIF.

LOCATION.--Lat 33°06'17", long 115°39'49", in SW¼SW¼SW¼ sec.19, T.12 S., R.13 E., Imperial County, on right bank 3.5 miles upstream from mouth, and 5.2 miles northwest of Westmorland.

PERIOD OF RECORD.--January 1943 to current year. Monthly discharge only for January 1943 to September 1960, published in WSP 1734.

GAGE.--Water-stage recorder. Altitude of gage is 220 ft below mean sea level (from topographic map).

EXTREMES.--Period of record: Maximum daily discharge, 1,180 cfs Sept. 19, 1963; minimum daily, 293 cfs Jan. 6, 1967.

REMARKS.--Discharge represents seepage and return flow from irrigated areas.

COOPERATION.--Records furnished by Imperial Irrigation District and reviewed by Geological Survey.

DISCHARGE, IN CUBIC FEET PER SECOND, WATER YEAR OCTOBER 1971 TO SEPTEMBER 1972

DAY	OCT	NOV	DEC	JAN	FEB	MAR	APR	MAY	JUN	JUL	AUG	SEP
1	677	525	473	498	598	551	672	670	553	526	513	492
2	605	502	502	500	561	586	670	657	526	543	507	528
3	628	479	473	502	594	572	681	619	559	543	496	530
4	632	515	455	494	592	590	685	600	547	511	502	505
5	584	504	442	513	621	607	662	584	543	483	532	517
6	647	481	444	551	622	662	677	594	580	505	530	496
7	630	502	494	564	641	649	676	621	592	517	574	509
8	641	530	479	600	609	628	704	590	640	526	559	534
9	630	600	500	572	596	619	716	574	617	504	551	563
10	617	528	523	574	636	622	736	584	528	494	572	580
11	634	511	488	588	607	621	730	601	540	494	532	563
12	695	466	490	609	615	649	677	609	504	504	551	566
13	664	492	504	622	624	666	670	630	507	507	570	574
14	664	563	534	594	630	681	685	605	487	515	600	545
15	605	570	500	603	636	653	710	568	504	515	596	561
16	600	564	473	555	609	683	728	574	496	542	528	570
17	662	525	466	574	586	668	764	557	504	507	511	586
18	651	523	485	594	559	695	638	605	532	540	511	592
19	664	483	485	596	580	689	590	564	530	521	530	626
20	626	487	502	584	578	670	666	559	507	515	549	617
21	582	477	525	568	568	689	679	566	496	496	566	596
22	559	507	507	561	570	728	700	603	525	532	559	594
23	555	502	521	553	580	730	726	609	479	502	543	609
24	574	505	521	547	566	716	691	590	492	490	542	609
25	603	511	507	528	549	700	689	572	485	509	502	615
26	607	487	468	545	566	698	624	564	485	517	523	619
27	574	485	429	582	580	687	636	609	492	532	515	613
28	543	455	455	549	588	672	670	592	470	542	530	622
29	515	433	517	563	551	655	666	617	494	513	553	619
30	515	444	551	582	------	687	643	607	502	523	515	574
31	540	------	505	584	------	693	------	553	------	517	492	------
TOTAL	18,923	15,156	15,218	17,449	17,212	20,416	20,461	18,447	15,716	15,985	16,654	17,124
MEAN	610	505	491	563	594	659	682	595	524	516	537	571
MAX	695	600	551	622	641	730	764	670	640	543	600	626
MIN	515	433	429	494	549	551	590	553	470	483	492	492
AC-FT	37,530	30,060	30,180	34,610	34,140	40,500	40,580	36,590	31,170	31,710	33,030	33,970

CAL YR 1971 TOTAL 213,258 MEAN 584 MAX 881 MIN 429 AC-FT 423,000
WTR YR 1972 TOTAL 208,761 MEAN 570 MAX 764 MIN 429 AC-FT 414,100

10255700 SAN FELIPE CREEK NEAR JULIAN, CALIF.

LOCATION.--Lat 33°07'07", long 116°26'04", San Diego County, in Anza Borrego State Park, on left bank under bridge on State Highway 78, in Sentenac Canyon 1.0 mile upstream from Grapevine Canyon, and 10 miles northeast of Julian.

DRAINAGE AREA.--89.2 sq mi.

PERIOD OF RECORD.--August 1958 to current year.

GAGE.--Water-stage recorder and concrete low-water control. Datum of gage is 1,872.69 ft above mean sea level.

AVERAGE DISCHARGE.--14 years, 0.26 cfs (188 acre-ft per year); median of yearly mean discharges, 0.2 cfs (140 acre-ft per year).

EXTREMES.--Current year: Maximum discharge, 0.38 cfs Dec. 28 (gage height, 1.27 ft); no flow Oct. 1 to Nov. 23, May 15-18, May 25 to Sept. 30.
Period of record: Maximum discharge, 1,050 cfs Aug. 22, 1967 (gage height, 4.08 ft), from rating curve extended above 12 cfs on basis of slope-area measurement at gage height 3.50 ft; no flow for many days in each year.

REMARKS.--Records good. No regulation or diversion above station.

DISCHARGE, IN CUBIC FEET PER SECOND, WATER YEAR OCTOBER 1971 TO SEPTEMBER 1972

DAY	OCT	NOV	DEC	JAN	FEB	MAR	APR	MAY	JUN	JUL	AUG	SEP
1		0	.12	.23	.30	.25	.15	.04				
2		0	.12	.24	.29	.26	.15	.04				
3		0	.12	.24	.30	.23	.15	.04				
4		0	.14	.21	.31	.24	.12	.03				
5		0	.15	.21	.30	.24	.12	.04				
6		0	.22	.23	.30	.20	.15	.07				
7		0	.25	.24	.29	.20	.12	.08				
8		0	.15	.25	.30	.20	.12	.07				
9		0	.15	.25	.30	.20	.10	.06				
10		0	.18	.25	.30	.20	.10	.05				
11		0	.17	.25	.27	.20	.12	.04				
12		0	.17	.27	.28	.20	.15	.02				
13		0	.27	.27	.28	.21	.18	.01				
14		0	.21	.27	.27	.22	.18	.01				
15		0	.20	.27	.26	.21	.15	0				
16		0	.18	.28	.27	.20	.12	0				
17		0	.20	.27	.26	.19	.12	0				
18		0	.21	.27	.25	.18	.15	0				
19		0	.21	.27	.26	.18	.18	.03				
20		0	.21	.27	.24	.18	.21	.06				
21		0	.21	.27	.26	.17	.15	.04				
22		0	.28	.28	.27	.18	.12	.03				
23		0	.28	.29	.27	.14	.10	.01				
24		.02	.25	.27	.27	.18	.08	.01				
25		.05	.29	.27	.24	.15	.08	0				
26		.07	.27	.29	.24	.15	.08	0				
27		.08	.25	.28	.24	.15	.08	0				
28		.09	.32	.28	.26	.15	.08	0				
29		.11	.28	.29	.24	.15	.06	0				
30		.12	.24	.30	------	.15	.06	0				
31		------	.21	.28	------	.15	------	0	------			------
TOTAL	0	.54	6.51	8.14	7.92	5.91	3.73	.78	0	0	0	0
MEAN	0	.018	.21	.26	.27	.19	.12	.025	0	0	0	0
MAX	0	.12	.32	.30	.31	.26	.21	.08	0	0	0	0
MIN	0	0	.12	.21	.24	.14	.06	0	0	0	0	0
AC-FT	0	1.1	13	16	16	12	7.4	1.6	0	0	0	0

CAL YR 1971 TOTAL 56.79 MEAN .16 MAX .96 MIN 0 AC-FT 113
WTR YR 1972 TOTAL 33.53 MEAN .092 MAX .32 MIN 0 AC-FT 67

PEAK DISCHARGE (BASE, 50 CFS).--No peak above base.

10255800 COYOTE CREEK NEAR BORREGO SPRINGS, CALIF.

LOCATION.--Lat 33°22'06", long 116°25'14", in NE¼NE¼NE¼ sec.26, T.9 S., R.5 E., San Diego County, on left bank 0.5 mile downstream from Box Canyon, 1.8 miles northwest of Rancho De Anza, and 8.2 miles northwest of Borrego Springs.
DRAINAGE AREA.--144 sq mi.
PERIOD OF RECORD.--October 1950 to current year. Monthly discharge only for October and November 1950, published in WSP 1734.
GAGE.--Water-stage recorder. Altitude of gage is 1,250 ft (from topographic map). Prior to Mar. 24, 1967, at site 0.6 mile upstream at different datum.
AVERAGE DISCHARGE.--22 years, 1.99 cfs (1,440 acre-ft per year).
EXTREMES.--Current year: Maximum discharge, 590 cfs Aug. 12 (gage height, 10.3 ft), from rating curve extended above 2.0 cfs on basis of slope-area measurement at gage-height 10.3 ft; minimum daily, 0.53 cfs July 13.
Period of record: Maximum discharge, 3,800 cfs July 28, 1951 (gage height, 14.14 ft, from floodmarks, site and datum then in use), on basis of slope-area measurement of maximum flow; minimum daily, 0.29 cfs Sept. 3, 1969.
REMARKS.--Records fair. No regulation or diversion above station.
REVISIONS.--Revised figures of discharge, in cubic feet per second, for highwater periods in the water years 1969, 1970, and 1971, superseding figures published in WRD Calif. 1969, 1970, and 1971, are give herewith:

Feb. 24, 1969.....	33
25.....	108
26.....	30
Aug. 9, 1971.....	16

MONTH	CFS-DAYS	MEAN	MAX	MIN	AC-FT
February 1969	214.7	7.67	108	1.1	426
WTR YR 1969	582.35	1.60	108	.29	1,160
CAL YR 1969	553.45	1.52	108	.29	1,100
August 1971	44.96	1.45	16	.69	89
WTR YR 1971	438.42	1.20	16	.54	890

REVISED PEAK DISCHARGE.--1969: Feb. 25 (2145) 318 cfs (8.86 ft).
1970: Aug. 16 (1415) 332 cfs (8.95 ft); Aug. 26 (1600) 1,320 cfs (12.60 ft).
1971: Aug. 9 (1830) 207 cfs (8.31 ft).

DISCHARGE, IN CUBIC FEET PER SECOND, WATER YEAR OCTOBER 1971 TO SEPTEMBER 1972

DAY	OCT	NOV	DEC	JAN	FEB	MAR	APR	MAY	JUN	JUL	AUG	SEP
1	1.0	1.9	1.5	1.6	1.4	1.2	1.1	1.0	1.1	.64	.62	1.1
2	1.1	1.9	1.5	1.6	1.4	1.2	1.1	1.0	.98	.63	.62	1.1
3	1.2	1.8	1.5	1.5	1.4	1.2	1.1	1.0	.98	.66	.68	1.0
4	1.2	1.8	1.4	1.6	1.4	1.2	1.0	1.1	.97	.64	.73	1.0
5	1.2	1.7	1.5	1.6	1.3	1.2	1.0	1.0	1.1	.59	.74	1.0
6	1.2	1.7	1.5	1.6	1.3	1.2	1.0	1.2	1.0	.63	.74	1.0
7	1.2	1.6	1.5	1.6	1.3	1.2	.95	1.2	1.3	.62	.70	1.0
8	1.2	1.5	1.5	1.6	1.3	1.3	.88	1.2	1.0	.63	.68	1.0
9	1.2	1.6	1.5	1.6	1.3	1.3	.82	1.2	.99	.58	.74	1.0
10	1.3	1.6	1.4	1.6	1.3	1.2	.76	1.2	.98	.58	.75	1.0
11	1.3	1.6	1.5	1.6	1.3	1.2	.70	1.1	.92	.59	.73	1.0
12	1.3	1.5	1.5	1.6	1.5	1.2	.70	1.1	.90	.60	45	1.0
13	1.3	1.3	1.5	1.6	1.5	1.1	.76	1.2	.80	.53	2.6	1.0
14	1.4	1.4	1.5	1.6	1.3	1.1	.82	1.3	.81	.56	1.4	1.0
15	1.5	1.4	1.5	1.6	1.3	1.1	.88	1.2	.86	.60	.95	1.0
16	1.6	1.4	1.5	1.6	1.3	1.2	.88	1.2	.81	.61	.90	1.0
17	1.7	1.4	1.5	1.6	1.3	1.1	.88	1.2	.82	.55	.82	1.1
18	1.7	1.4	1.5	1.6	1.3	1.1	.95	1.4	.78	.54	.80	1.2
19	1.7	1.4	1.5	1.6	1.3	1.1	1.0	1.4	.79	.55	.78	1.2
20	1.7	1.4	1.5	1.6	1.3	1.1	.95	1.4	1.0	.58	.80	1.2
21	1.7	1.4	1.5	1.6	1.3	1.0	1.0	1.4	.92	.61	.78	1.1
22	1.7	1.4	1.5	1.6	1.2	1.0	1.0	1.3	.90	.61	.79	1.0
23	1.7	1.4	1.5	1.6	1.2	1.1	1.0	1.2	.92	.59	.78	1.0
24	1.8	1.4	1.5	1.5	1.2	1.1	1.0	1.1	.89	.56	.72	1.0
25	1.8	1.4	1.5	1.5	1.2	1.2	1.1	1.1	.87	.61	.70	1.1
26	1.8	1.5	1.5	1.5	1.2	1.1	1.0	1.1	.78	.58	.64	1.0
27	1.8	1.4	1.5	1.5	1.2	1.1	1.0	1.1	.75	.57	6.7	1.0
28	1.8	1.5	1.5	1.5	1.2	1.1	1.0	1.1	.72	.61	1.5	.84
29	1.8	1.5	1.5	1.5	1.2	1.1	1.0	1.1	.72	.69	1.3	.94
30	1.9	1.5	1.5	1.5	------	1.1	1.0	1.1	.68	.70	1.1	.94
31	1.9	------	1.6	1.5	------	1.1	------	1.1	------	.65	1.1	------
TOTAL	46.7	45.7	46.4	48.7	37.7	35.5	28.33	36.3	27.04	18.69	77.89	30.82
MEAN	1.51	1.52	1.50	1.57	1.30	1.15	.94	1.17	.90	.60	2.51	1.03
MAX	1.9	1.9	1.6	1.6	1.5	1.3	1.1	1.4	1.3	.70	45	1.2
MIN	1.0	1.3	1.4	1.5	1.2	1.0	.70	1.0	.68	.53	.62	.84
AC-FT	93	91	92	97	75	70	56	72	54	37	154	61

CAL YR 1971 TOTAL 457.57 MEAN 1.25 MAX 16 MIN .54 AC-FT 908
WTR YR 1972 TOTAL 479.77 MEAN 1.31 MAX 45 MIN .53 AC-FT 952

10255810 BORREGO PALM CREEK NEAR BORREGO SPRINGS, CALIF.

LOCATION.--Lat 33°16'44", long 116°25'45", in Anza-Borrego Desert State Park, San Diego County, on left bank 3.3 miles northwest of Borrego Springs.

DRAINAGE AREA.--21.8 sq mi.

PERIOD OF RECORD.--October 1950 to current year. Prior to October 1960, published as "Palm Canyon Creek near Borrego Springs." Monthly discharge only for October to November 1950, published in WSP 1734.

GAGE.--Water-stage recorder. Altitude of gage is 1,200 ft (from topographic map).

AVERAGE DISCHARGE.--22 years, 0.34 cfs (246 acre-ft per year); median of yearly mean discharges, 0.2 cfs (140 acre-ft per year).

EXTREMES.--Current year: Maximum discharge, 0.13 cfs Mar. 16 (gage height, 1.64 ft); no flow most of year. Period of record: Maximum discharge, 2,000 cfs (estimated) Aug. 23, 1955 (gage height, 9.9 ft, from floodmarks); no flow for several months in each year.

REMARKS.--Records good. No regulation or diversion above station.

DISCHARGE, IN CUBIC FEET PER SECOND, WATER YEAR OCTOBER 1971 TO SEPTEMBER 1972

DAY	OCT	NOV	DEC	JAN	FEB	MAR	APR	MAY	JUN	JUL	AUG	SEP
1					0	.08	.02					
2					0	.10	.02					
3					0	.05	.02					
4					0	.06	.02					
5					0	.07	.02					
6					0	.08	.02					
7					0	.10	.01					
8					.01	0	.01					
9					.03	.12	.01					
10					.03	.12	.01					
11					.03	.12	.01					
12					.04	.12	.01					
13					.04	.11	.01					
14					.04	.10	.01					
15					.04	.11	0					
16					.04	.13	0					
17					.04	.12	0					
18					.04	.08	0					
19					.04	.05	0					
20					.04	.06	0					
21					.04	.06	0					
22					.04	.07	0					
23					.04	.06	0					
24					.04	.05	0					
25					.04	.04	0					
26					.04	.03	0					
27					.05	.03	0					
28					.05	.03	0					
29					.06	.03	0					
30					------	.05	0					
31		------			------	.03	------		------			------
TOTAL	0	0	0	0	.86	2.26	.20	0	0	0	0	0
MEAN	0	0	0	0	.030	.073	.007	0	0	0	0	0
MAX	0	0	0	0	.06	.13	.02	0	0	0	0	0
MIN	0	0	0	0	0	0	0	0	0	0	0	0
AC-FT	0	0	0	0	1.7	4.5	.4	0	0	0	0	0

CAL YR 1971 TOTAL 27.55 MEAN .076 MAX .95 MIN 0 AC-FT 55
WTR YR 1972 TOTAL 3.32 MEAN .0090 MAX .13 MIN 0 AC-FT 6.6

PEAK DISCHARGE (BASE, 15 CFS).--No peak above base.

10255850 VALLECITO CREEK NEAR JULIAN, CALIF.

LOCATION.--Lat 32°59'10", long 116°25'10", in SW¼NE¼ sec.1, T.14 S., R.5 E., San Diego County, on right bank 0.2 mile downstream from Cottonwood Wash, and 12.6 miles southeast of Julian.

DRAINAGE AREA.--39.7 sq mi.

PERIOD OF RECORD.--October 1963 to current year.

GAGE.--Water-stage recorder. Altitude of gage is 1,950 ft above mean sea level (from topographic map). U.S. Weather Bureau nonrecording rain gage at site 2.0 miles upstream.

AVERAGE DISCHARGE.--9 years, 0.14 cfs (101 acre-ft per year).

EXTREMES.--Current year: Maximum discharge, 0.11 cfs Apr. 27 (gage height, 1.19 ft); minimum daily, 0.03 cfs for some days.

Period of record: Maximum discharge, 434 cfs July 17, 1969 (gage height, 5.82 ft, from high-water mark in well), from rating curve extended above 160 cfs on basis of velocity-area study of maximum flow; no flow at times in some years.

REMARKS.--Records good. No regulation or diversion above station. Precipitation record incomplete.

DISCHARGE, IN CUBIC FEET PER SECOND, WATER YEAR OCTOBER 1971 TO SEPTEMBER 1972

DAY	OCT	NOV	DEC	JAN	FEB	MAR	APR	MAY	JUN	JUL	AUG	SEP
1	.04	.03	.04	.06	.06	.05	.05	.04	.04	.04	.04	.04
2	.04	.03	.05	.06	.06	.05	.06	.05	.04	.04	.04	.05
3	.04	.03	.05	.06	.05	.05	.06	.05	.05	.04	.04	.05
4	.04	.03	.05	.06	.05	.05	.06	.04	.05	.04	.04	.05
5	.04	.03	.05	.06	.05	.05	.06	.05	.05	.04	.04	.04
6	.04	.03	.05	.06	.05	.05	.06	.05	.04	.04	.04	.04
7	.04	.04	.06	.07	.05	.05	.05	.05	.04	.04	.04	.04
8	.04	.04	.06	.07	.05	.05	.05	.05	.04	.03	.04	.04
9	.04	.04	.06	.07	.05	.05	.04	.05	.04	.03	.04	.04
10	.04	.04	.06	.06	.05	.07	.04	.05	.04	.03	.04	.04
11	.03	.04	.06	.06	.05	.07	.05	.05	.04	.03	.04	.04
12	.03	.04	.06	.06	.05	.06	.05	.05	.04	.03	.04	.04
13	.03	.04	.07	.06	.05	.07	.05	.05	.04	.03	.04	.04
14	.03	.04	.07	.06	.05	.07	.05	.05	.04	.03	.04	.04
15	.03	.04	.07	.07	.05	.06	.05	.05	.04	.04	.04	.05
16	.03	.04	.07	.07	.05	.06	.05	.05	.04	.04	.04	.04
17	.03	.04	.07	.06	.05	.06	.05	.05	.05	.04	.04	.04
18	.03	.04	.06	.06	.05	.06	.05	.05	.05	.04	.04	.05
19	.04	.04	.06	.06	.05	.07	.05	.05	.05	.04	.04	.05
20	.04	.04	.06	.06	.05	.06	.06	.05	.04	.04	.05	.06
21	.04	.04	.06	.05	.05	.06	.06	.05	.04	.04	.05	.05
22	.04	.04	.06	.06	.05	.06	.06	.05	.04	.04	.05	.05
23	.04	.04	.06	.06	.06	.05	.06	.05	.04	.04	.04	.06
24	.04	.04	.06	.06	.05	.05	.06	.05	.04	.03	.04	.06
25	.04	.04	.06	.06	.05	.06	.07	.05	.04	.04	.04	.06
26	.04	.04	.06	.06	.05	.06	.07	.05	.04	.04	.04	.06
27	.04	.04	.06	.06	.05	.06	.07	.05	.04	.04	.04	.05
28	.04	.04	.06	.06	.05	.06	.07	.05	.04	.04	.04	.06
29	.04	.04	.06	.06	.05	.06	.06	.05	.04	.04	.04	.05
30	.03	.04	.06	.06	------	.05	.04	.05	.04	.04	.04	.06
31	.03	------	.06	.06	------	.05	------	.04	------	.04	.04	------
TOTAL	1.14	1.14	1.84	1.90	1.48	1.78	1.66	1.52	1.26	1.16	1.27	1.44
MEAN	.037	.038	.059	.061	.051	.057	.055	.049	.042	.037	.041	.048
MAX	.04	.04	.07	.07	.06	.07	.07	.05	.05	.04	.05	.06
MIN	.03	.03	.04	.05	.05	.05	.04	.04	.04	.03	.04	.04
AC-FT	2.3	2.3	3.7	3.8	2.9	3.5	3.3	3.0	2.5	2.3	2.5	2.9

CAL YR 1971 TOTAL 45.53 MEAN .12 MAX 18 MIN .03 AC-FT 90
WTR YR 1972 TOTAL 17.59 MEAN .048 MAX .07 MIN .03 AC-FT 35

PEAK DISCHARGE (BASE, 15 CFS).--No peak above base.

10255885 SAN FELIPE CREEK NEAR WESTMORLAND, CALIF.

LOCATION.--Lat 33°07'25", long 115°51'08", in NW¼SW¼ sec.17, T.12 S., R.11 E., Imperial County, on left bank 320 ft downstream from U.S. Highway 99, and 14.6 miles northwest of Westmorland.

DRAINAGE AREA.--1,693 sq mi.

PERIOD OF RECORD.--December 1960 to current year.

GAGE.--Water-stage recorder. Altitude of gage is 190 ft below mean sea level (from topographic map).

AVERAGE DISCHARGE.--11 years (1961-72), 3.85 cfs (2,790 acre-ft per year); median of yearly mean discharges, 1.7 cfs (1,200 acre-ft per year).

EXTREMES.--Current year: Maximum discharge, 1,250 cfs June 7 (gage height, 8.23 ft, from floodmark), result of slope-area measurement; no flow most of year.
Period of record: Maximum discharge, 7,790 cfs Sept. 2, 1967 (gage height, 10.93 ft), from rating curve extended above 6 cfs on basis of slope-area measurements at gage heights 6.56, 10.18, and 10.75 ft; no flow for some months in each year.

REMARKS.--Records poor. No regulation above station. Diversion and pumping for domestic use and irrigation in Borrego Valley 25 miles upstream.

DISCHARGE, IN CUBIC FEET PER SECOND, WATER YEAR OCTOBER 1971 TO SEPTEMBER 1972

DAY	OCT	NOV	DEC	JAN	FEB	MAR	APR	MAY	JUN	JUL	AUG	SEP
1									0		0	
2									0		0	
3									0		0	
4									0		0	
5									0		0	
6									0		0	
7									422		0	
8									20		0	
9									0		0	
10									0		0	
11									0		0	
12									0		1.6	
13									0		26	
14									0		87	
15									0		0	
16									0		0	
17									0		0	
18									0		0	
19									0		0	
20									0		0	
21									0		0	
22									0		0	
23									0		0	
24									0		0	
25									0		0	
26									0		0	
27									0		0	
28									0		0	
29									0		0	
30					------				0		0	
31		------			------		------		------		0	------
TOTAL	0	0	0	0	0	0	0	0	442	0	114.6	0
MEAN	0	0	0	0	0	0	0	0	14.7	0	3.70	0
MAX	0	0	0	0	0	0	0	0	422	0	87	0
MIN	0	0	0	0	0	0	0	0	0	0	0	0
AC-FT	0	0	0	0	0	0	0	0	877	0	227	0

CAL YR 1971 TOTAL 588.12 MEAN 1.61 MAX 402 MIN 0 AC-FT 1,170
WTR YR 1972 TOTAL 556.60 MEAN 1.52 MAX 422 MIN 0 AC-FT 1,100

PEAK DISCHARGE (BASE, 200 CFS).--June 7 (1100) 1,250 cfs (8.23 ft); Aug. 14 (time unknown) 355 cfs (6.70 ft).

10256000 WHITEWATER RIVER AT WHITE WATER, CALIF.

LOCATION.--Lat 33°56'48", long 116°38'24", in NW¼NW¼NE¼ sec.2, T.3 S., R.3 E., Riverside County, on right bank 1.5 miles north of White Water, and 3.5 miles upstream from San Gorgonio River.
DRAINAGE AREA.--57.4 sq mi.
PERIOD OF RECORD.--October 1948 to current year.
GAGE.--Water-stage recorder on river (supplementary gage used Oct. 1 to Sept. 30); water-stage recorder and Cipolletti weir on diversion 500 ft downstream. Datum of gage is 1,610 ft above mean sea level. Feb. 24, 1950, to Sept. 30, 1952, and Apr. 13, 1960, to June 19, 1968, supplementary gages at different sites and datums within 200 ft of base gage. Since Aug. 12, 1969, supplementary gage at site 1.5 miles downstream at different datum.
AVERAGE DISCHARGE (River only).--24 years, 16.6 cfs (12,030 acre-ft per year).
(Combined river and infiltration line).--23 years (1949-72), 18.2 cfs (13,190 acre-ft per year); median of yearly mean discharges, 13 cfs (9,420 acre-ft per year).
EXTREMES (River only).--Current year: Maximum discharge, 515 cfs Dec. 24 (gage height, 6.30 ft), on basis of slope-conveyance measurement; minimum daily, 6.5 cfs Mar. 24, 25.
Period of record: Maximum discharge, 24,000 cfs Nov. 22, 1965 (gage height, 13.60 ft), from rating curve extended above 660 cfs on basis of field estimate of maximum flow; no flow at times in some years.
Maximum discharge, 42,000 cfs Mar. 2, 1938, by slope-area measurement of peak flow, at site 2.5 miles upstream (drainage area, 51.4 sq mi).
REMARKS.--Records poor. White Water Mutual Water Co. diverts 50 ft downstream. Diversion was added to flow at supplementary gage to obtain daily discharge for the water year 1972. Monthly discharge is combined with flow from infiltration line that bypasses station. No regulation above station. Water is diverted out of basin about 15 miles upstream to powerplants in San Gorgonio River basin and then to an area north of Banning for irrigation. One small diversion for domestic use and one for irrigation are made 2 to 3 miles upstream. Records of suspended-sediment discharge for the current year are published in Part 2 of this report.
COOPERATION.--Records of bypass in infiltration line furnished by White Water Mutual Water Co.; records of diversion, 15 miles upstream, furnished by Southern California Edison Co.

DISCHARGE, IN CUBIC FEET PER SECOND, WATER YEAR OCTOBER 1971 TO SEPTEMBER 1972

DAY	OCT	NOV	DEC	JAN	FEB	MAR	APR	MAY	JUN	JUL	AUG	SEP
1	12	11	10	12	9.4	7.6	6.6	7.8	8.0	8.5	9.2	8.7
2	12	11	10	12	9.4	7.5	6.6	7.8	8.2	8.5	9.3	8.7
3	12	11	10	12	9.3	7.4	6.6	7.8	8.3	8.5	9.5	8.7
4	12	11	10	12	9.2	7.4	6.6	7.7	8.5	8.5	9.7	8.7
5	12	11	10	12	9.2	7.3	6.6	7.7	8.6	8.5	9.7	8.6
6	12	11	10	11	9.1	7.3	6.6	7.7	8.7	8.5	9.7	8.6
7	12	11	10	11	9.0	7.3	6.6	7.6	8.8	8.5	9.6	8.5
8	12	11	10	11	9.0	7.2	6.6	7.6	8.8	8.5	9.6	8.5
9	12	11	10	11	8.9	7.2	6.6	7.6	8.8	8.5	9.4	8.5
10	12	11	10	11	8.9	7.1	6.6	7.6	8.8	8.6	9.3	8.5
11	12	11	10	11	8.8	7.1	6.6	7.6	8.8	8.8	9.2	8.5
12	12	11	10	11	8.7	7.1	6.6	7.6	8.8	8.9	9.0	8.5
13	12	11	9.8	11	8.7	7.0	6.6	7.6	8.8	9.0	8.9	8.5
14	12	11	9.6	11	8.6	6.9	6.6	7.6	8.8	9.0	8.8	8.5
15	12	11	9.6	11	8.6	6.9	6.6	7.6	8.8	9.0	8.6	8.5
16	12	11	9.6	11	8.5	6.8	6.6	7.6	8.8	9.0	8.5	8.5
17	12	11	9.6	11	8.4	6.8	6.6	7.6	8.8	9.0	8.4	8.6
18	12	11	9.6	10	8.4	6.7	6.6	7.6	8.8	9.0	8.2	8.6
19	12	11	9.6	10	8.4	6.7	6.7	7.7	8.8	9.0	8.2	8.6
20	12	11	9.6	10	8.3	6.6	6.8	7.7	8.7	9.0	8.2	8.6
21	11	11	9.6	10	8.2	6.6	6.9	7.7	8.7	9.0	8.2	8.7
22	11	11	39	10	8.1	6.6	7.0	7.7	8.7	9.0	8.3	8.7
23	11	11	24	9.8	8.0	6.6	7.3	7.7	8.7	9.0	8.5	8.7
24	11	11	126	9.8	8.0	6.5	7.4	7.7	8.7	9.0	8.6	8.8
25	11	11	52	9.8	7.9	6.5	7.6	7.7	8.7	9.0	8.7	8.9
26	11	11	30	9.7	7.8	6.6	7.8	7.7	8.6	9.0	8.7	8.9
27	11	11	20	9.6	7.8	6.6	7.8	7.7	8.6	9.0	8.7	9.0
28	11	11	15	9.6	7.8	6.6	7.8	7.8	8.6	9.0	8.7	9.0
29	11	11	13	9.5	7.7	6.6	7.8	7.8	8.6	9.0	8.7	9.0
30	11	11	12	9.5	------	6.6	7.8	7.8	8.6	9.0	8.7	9.0
31	11	------	12	9.4	------	6.6	------	7.8	------	9.1	8.7	------
TOTAL	361	330	549.6	328.7	248.1	214.3	207.5	238.2	259.9	273.9	275.5	260.1
MEAN	11.6	11.0	17.7	10.6	8.56	6.91	6.92	7.68	8.66	8.84	8.89	8.67
MAX	12	11	126	12	9.4	7.6	7.8	7.8	8.8	9.1	9.7	9.0
MIN	11	11	9.6	9.4	7.7	6.5	6.6	7.6	8.0	8.5	8.2	8.5
AC-FT	716	655	1,090	652	492	425	412	472	516	543	546	516
(a)	760	698	1,140	698	534	466	450	523	564	608	596	561
(b)	104	83	103	35	102	125	23	0	0	0	20	80

CAL YR 1971 TOTAL 4,361.7 MEAN 11.9 MAX 126 MIN 6.3 AC-FT 8,650 AC-FT a 6,540
WTR YR 1972 TOTAL 3,546.8 MEAN 9.69 MAX 126 MIN 6.5 AC-FT 7,040 AC-FT a 7,600

PEAK DISCHARGE (BASE, 100 CFS).--Dec. 24 (2200) 515 cfs (6.30 ft).

a Combined discharge of river and infiltration line.
b Discharge diverted from basin 15 miles upstream.

10256400 SAN GORGONIO RIVER NEAR WHITE WATER, CALIF.

LOCATION.--Lat 33°55'14", long 116°41'45", in NW¼SE¼SW¼ sec.8, T.3 S., R.3 E., Riverside County, on right bank 0.2 mile south of Interstate Highway 10, and 3.4 miles west of town of White Water.

DRAINAGE AREA.--154 sq mi.

PERIOD OF RECORD.--February 1966 to current year.

GAGE.--Water-stage recorder. Altitude of gage is 1,320 ft (from topographic map). Prior to Mar. 19, 1968, flood-hydrograph recorder.

AVERAGE DISCHARGE.--6 years, 2.13 cfs (1,540 acre-ft per year).

EXTREMES.--Current year: Maximum discharge, 15 cfs Dec. 26 (gage height, 1.90 ft); no flow most of year.
Period of record: Maximum discharge, 7,250 cfs Jan. 25, 1969 (gage height, 6.0 ft, from floodmarks), on basis of slope-area measurement of maximum flow; no flow most of each year.
Flood of Nov. 23, 1965, reached a stage of 6.10 ft, from floodmarks (discharge, 4,500 cfs on basis of slope-area measurement).

REMARKS.--Records poor. No regulation or diversion above station.

DISCHARGE, IN CUBIC FEET PER SECOND, WATER YEAR OCTOBER 1971 TO SEPTEMBER 1972

DAY	OCT	NOV	DEC	JAN	FEB	MAR	APR	MAY	JUN	JUL	AUG	SEP
1			0									
2			0									
3			0									
4			0									
5			0									
6			0									
7			0									
8			0									
9			0									
10			0									
11			0									
12			0									
13			0									
14			0									
15			0									
16			0									
17			0									
18			0									
19			0									
20			0									
21			0									
22			0									
23			0									
24			0									
25			.04									
26			.85									
27			.10									
28			0									
29			0									
30			0		------							
31		------	0		------		------		------			------
TOTAL	0	0	.99	0	0	0	0	0	0	0	0	0
MEAN	0	0	.032	0	0	0	0	0	0	0	0	0
MAX	0	0	.85	0	0	0	0	0	0	0	0	0
MIN	0	0	0	0	0	0	0	0	0	0	0	0
AC-FT	0	0	2.0	0	0	0	0	0	0	0	0	0

CAL YR 1971 TOTAL 0.99 MEAN .0030 MAX .85 MIN 0 AC-FT 2.0
WTR YR 1972 TOTAL 0.99 MEAN .0030 MAX .85 MIN 0 AC-FT 2.0

PEAK DISCHARGE (BASE, 50 CFS).--No peak above base.

10256500 SNOW CREEK NEAR WHITE WATER, CALIF.

LOCATION.--Lat 33°52'14", long 116°40'49", in SE¼NW¼NW¼ sec.33, T.3 S., R.3 E., Riverside County, on left bank 300 ft upstream from Southern Pacific Railroad diversion dam, 300 ft downstream from East Fork, 2.5 miles upstream from mouth, and 4.4 miles southwest of White Water.

DRAINAGE AREA.--10.8 sq mi.

PERIOD OF RECORD.--July to December 1921, May 1922 to February 1927, December 1927 to September 1931, October 1959 to current year. Yearly discharge only for 1930, published in WSP 1314.

GAGE.--Water-stage recorder. Altitude of gage is 2,000 ft (from topographic map). Prior to September 1931, at various sites within 500 ft of present site at different datums. September 1931 to Oct. 6, 1970, at site 250 ft downstream at datum 15.9 ft lower.

AVERAGE DISCHARGE.--20 years (1922-26, 1928-31, 1959-72), 8.44 cfs (6,110 acre-ft per year); median of yearly mean discharges, 6.0 cfs (4,300 acre-ft per year).

EXTREMES.--Current year: Maximum discharge, 1,130 cfs Dec. 24 (gage height, 19.94 ft); minimum daily, 2.4 cfs Sept. 12-16, 18.
Period of record: Maximum discharge, 13,000 cfs Jan. 25, 1969 (gage height, 27.4 ft, from floodmarks, present datum), from rating curve extended above 55 cfs on basis of slope-area measurement of maximum flow; minimum daily, 2.1 cfs June 23-27, Sept. 5-11, 1961.

REMARKS.--Records good. No regulation or diversion above station. Palm Springs Water Company diverts 50 ft downstream, generally taking the entire base flow.

DISCHARGE, IN CUBIC FEET PER SECOND, WATER YEAR OCTOBER 1971 TO SEPTEMBER 1972

DAY	OCT	NOV	DEC	JAN	FEB	MAR	APR	MAY	JUN	JUL	AUG	SEP
1	3.3	4.0	4.0	12	6.6	4.5	4.0	4.1	5.0	3.7	3.0	2.8
2	3.2	4.0	3.8	11	6.4	4.6	3.8	4.0	5.4	3.5	2.9	2.8
3	3.0	4.0	3.8	10	6.4	4.6	3.8	4.0	5.6	3.5	2.8	2.8
4	3.2	4.0	4.3	9.6	6.4	4.6	4.0	4.0	5.3	3.4	3.0	2.8
5	3.2	3.8	3.8	8.8	6.2	4.6	4.1	4.5	5.2	3.3	2.9	3.0
6	3.2	3.8	3.8	8.3	6.2	4.6	4.2	4.9	5.3	3.2	2.9	3.0
7	3.4	3.8	3.8	8.0	6.0	4.6	4.5	4.9	5.4	3.2	2.9	3.0
8	3.2	3.8	3.5	7.6	6.0	4.6	4.5	4.9	5.4	3.1	3.0	3.0
9	3.3	3.5	3.5	7.4	5.8	4.6	4.7	4.9	5.1	3.1	3.0	2.6
10	3.3	3.9	3.2	7.2	5.8	4.6	4.7	4.9	5.0	3.1	2.9	2.6
11	3.3	4.0	3.3	7.0	5.6	4.6	4.8	4.9	4.8	3.0	2.9	2.6
12	3.3	4.5	3.2	7.0	5.6	4.8	4.8	4.9	4.6	3.0	3.0	2.4
13	3.3	4.6	3.6	7.2	5.4	4.9	4.9	4.6	4.4	3.0	3.1	2.4
14	3.3	4.2	4.0	7.2	5.4	4.9	4.9	4.6	4.3	3.0	3.0	2.4
15	3.3	4.0	4.6	7.2	5.4	4.9	4.9	4.9	4.3	3.0	3.0	2.4
16	3.3	4.3	4.3	7.0	5.2	4.9	5.0	4.9	4.3	3.0	3.0	2.4
17	3.3	4.5	4.3	7.0	5.7	4.9	4.9	5.2	4.2	3.0	3.0	2.6
18	3.4	4.6	4.3	7.0	4.9	4.9	4.7	5.2	4.2	3.0	2.9	2.4
19	3.4	4.3	4.3	7.0	4.9	4.7	5.0	5.4	4.2	3.0	2.9	2.8
20	3.4	4.3	4.3	7.0	5.3	4.6	4.9	5.7	4.3	3.0	2.8	2.8
21	3.5	4.5	4.3	7.0	5.4	4.6	4.9	5.4	5.1	2.9	2.8	2.6
22	3.5	4.3	140	7.0	5.2	4.3	4.8	5.2	4.8	2.9	2.8	2.6
23	3.5	4.3	86	7.0	4.9	4.2	4.6	5.2	4.6	2.9	2.7	2.8
24	3.5	4.0	622	7.0	4.9	4.3	4.5	5.2	4.4	2.9	2.8	2.8
25	3.6	4.0	489	7.0	4.9	4.1	4.5	4.9	4.4	2.8	2.8	2.6
26	3.8	4.0	288	7.0	4.9	4.3	4.4	4.9	4.2	2.8	2.8	2.6
27	3.6	4.1	133	6.8	4.6	4.3	4.4	5.2	4.1	2.8	3.0	2.6
28	3.7	4.5	70	6.8	4.6	4.1	4.4	5.2	4.0	2.9	3.0	2.6
29	4.5	4.3	27	6.6	4.5	4.0	4.0	5.0	3.9	2.9	3.0	2.8
30	4.2	4.0	20	6.6	------	4.0	4.0	4.8	3.7	3.3	3.0	2.8
31	4.3	------	13	6.6	------	4.0	------	4.6	------	3.0	3.0	------
TOTAL	107.3	123.9	1,970.0	235.9	159.1	140.2	135.6	151.0	139.5	95.2	90.6	80.4
MEAN	3.46	4.13	63.5	7.61	5.49	4.52	4.52	4.87	4.65	3.07	2.92	2.68
MAX	4.5	4.6	622	12	6.6	4.9	5.0	5.7	5.6	3.7	3.1	3.0
MIN	3.0	3.5	3.2	6.6	4.5	4.0	3.8	4.0	3.7	2.8	2.7	2.4
AC-FT	213	246	3,910	468	316	278	269	300	277	189	180	159

CAL YR 1971 TOTAL 3,651.6 MEAN 10.0 MAX 622 MIN 2.6 AC-FT 7,240
WTR YR 1972 TOTAL 3,428.7 MEAN 9.37 MAX 622 MIN 2.4 AC-FT 6,800

PEAK DISCHARGE (BASE, 50 CFS).--Dec. 24 (2200) 1,130 cfs (19.94 ft).

10257600 MISSION CREEK NEAR DESERT HOT SPRINGS, CALIF.

LOCATION.--Lat 34°00'40", long 116°37'38", in NE¼SW¼ sec.12, T.2 S., R.3 E., Riverside County, in Mission Creek Indian Reservation, 0.6 mile downstream from West Fork, and 6.8 miles northwest of Desert Hot Springs.

DRAINAGE AREA.--35.7 sq mi.

PERIOD OF RECORD.--October 1967 to current year.

GAGE.--Water-stage recorder with rain-gage attachment. Altitude of gage is 2,400 ft (from topographic map).

AVERAGE DISCHARGE.--5 years, 2.85 cfs (2,060 acre-ft per year).

EXTREMES.--Current year: Maximum discharge, 5.2 cfs Dec. 24 (gage height, 2.39 ft); no flow for several months. Period of record: Maximum discharge, 1,660 cfs Jan. 25, 1969 (gage height, 6.40 ft), on basis of slope-area measurement of maximum flow; no flow for much of most years.

REMARKS.--Records good. No regulation or diversion above station.

DISCHARGE, IN CUBIC FEET PER SECOND, WATER YEAR OCTOBER 1971 TO SEPTEMBER 1972

DAY	OCT	NOV	DEC	JAN	FEB	MAR	APR	MAY	JUN	JUL	AUG	SEP
1			0	.53	.28	.34						
2			0	.53	.34	.31						
3			0	.53	.37	.28						
4			0	.77	.34	.28						
5			0	.22	.26	.26						
6			0	.20	.26	.22						
7			0	.28	.28	.24						
8			0	.15	.28	.22						
9			0	.09	.28	.22						
10			0	.11	.23	.20						
11			0	.09	.24	.22						
12			0	.10	.26	.20						
13			0	.07	.26	.20						
14			0	.06	.24	.18						
15			0	.09	.17	.16						
16			0	.13	.06	.16						
17			0	.11	.11	.16						
18			0	.11	.31	.11						
19			0	.12	.31	.06						
20			0	.12	.34	.05						
21			0	.14	.34	.06						
22			0	.17	.34	.07						
23			0	.26	.34	.09						
24			1.5	.28	.34	0						
25			1.6	.34	.34	0						
26			.78	.34	.34	0						
27			.72	.41	.34	0						
28			.72	.34	.34	0						
29			.67	.28	.34	0						
30			.62	.34	------	0						
31		------	.57	.41	------	0	------		------			------
TOTAL	0	0	7.18	7.72	8.28	4.29	0	0	0	0	0	0
MEAN	0	0	.23	.25	.29	.14	0	0	0	0	0	0
MAX	0	0	1.6	.77	.37	.34	0	0	0	0	0	0
MIN	0	0	0	.06	.06	0	0	0	0	0	0	0
AC-FT	0	0	14	15	16	8.5	0	0	0	0	0	0
(a)	0	0	2.9	.1	0	0	0	0	0	0	0	.1

CAL YR 1971 TOTAL 250.11 MEAN .69 MAX 2.5 MIN 0 AC-FT 496
WTR YR 1972 TOTAL 27.47 MEAN .075 MAX 1.6 MIN 0 AC-FT 54

PEAK DISCHARGE (BASE, 50 CFS).--No peak above base.

a Precipitation, in inches.

10258000 TAHQUITZ CREEK NEAR PALM SPRINGS, CALIF.

LOCATION.--Lat 33°48'18", long 116°33'30", in NE¼SW¼SW¼ sec.22, T.4 S., R.4 E., Riverside County, on left bank 2.2 miles southwest of Palm Springs, and 7 miles upstream from mouth.

DRAINAGE AREA.--16.8 sq mi.

PERIOD OF RECORD.--October 1947 to current year.

GAGE.--Water-stage recorder. Datum of gage is 762.5 ft above mean sea level (levels by Riverside County Flood Control District). Prior to Aug. 25, 1970, at datum 2.00 ft higher.

AVERAGE DISCHARGE.--25 years, 3.92 cfs (2,840 acre-ft per year); median of yearly mean discharges, 1.5 cfs (1,100 acre-ft per year).

EXTREMES.--Current year: Maximum discharge, 250 cfs Dec. 25 (gage height, 7.30 ft); no flow for several months. Period of record: Maximum discharge, 2,900 cfs Nov. 22, 1965, Jan. 25, 1969 (gage height, 12.34 ft, present datum), from rating curve extended above 80 cfs on basis of slope-area measurements at gage heights 8.45 and 10.34 ft; no flow for parts of each year.

REMARKS.--Records poor. No regulation or diversion above station.

DISCHARGE, IN CUBIC FEET PER SECOND, WATER YEAR OCTOBER 1971 TO SEPTEMBER 1972

DAY	OCT	NOV	DEC	JAN	FEB	MAR	APR	MAY	JUN	JUL	AUG	SEP
1	0	.16	.13	2.8	1.6	1.3	.66	.40	.06			
2	0	.16	.13	2.7	1.5	1.3	.58	.38	.06			
3	0	.16	.13	2.6	1.4	1.2	.58	.38	.06			
4	0	.15	.13	2.4	1.4	1.3	.58	.37	.05			
5	0	.15	.13	2.3	1.4	1.4	.58	.35	.05			
6	0	.15	.13	2.2	1.6	1.4	.59	.33	.04			
7	0	.15	.13	2.2	1.5	1.4	.59	.32	.04			
8	0	.15	.13	2.1	1.4	1.4	.63	.31	.03			
9	0	.15	.13	2.0	1.4	1.3	.63	.30	.03			
10	0	.15	.13	2.0	1.4	1.2	.64	.29	.02			
11	0	.14	.13	1.9	1.3	1.2	.66	.28	.02			
12	0	.14	.13	1.9	1.3	1.2	.66	.26	.02			
13	0	.14	.55	1.9	1.3	1.2	.68	.25	.01			
14	0	.14	.46	1.9	1.2	1.2	.68	.24	.01			
15	0	.14	.46	1.8	1.3	1.1	.66	.22	.01			
16	.23	.14	.46	1.8	1.2	1.1	.66	.21	.01			
17	.22	.14	.44	1.8	1.2	1.0	.64	.20	.01			
18	.21	.14	.44	1.7	1.2	.98	.63	.19	0			
19	.20	.14	.42	1.7	1.2	.92	.62	.17	0			
20	.19	.14	.40	1.8	1.2	.89	.62	.16	0			
21	.19	.14	.40	1.7	1.4	.89	.60	.15	0			
22	.18	.14	.38	1.7	1.4	.83	.56	.14	0			
23	.18	.14	3.2	1.8	1.3	.76	.54	.13	0			
24	.18	.14	52	1.8	1.3	.74	.52	.12	0			
25	.17	.14	80	1.7	1.3	.70	.48	.11	0			
26	.17	.14	21	1.7	1.3	.66	.46	.10	0			
27	.17	.14	8.4	1.6	1.3	.66	.44	.09	0			
28	.17	.14	5.5	1.6	1.3	.66	.43	.09	0			
29	.17	.14	4.2	1.6	1.3	.66	.42	.09	0			
30	.16	.14	3.5	1.6	------	.66	.41	.08	0			
31	.16	------	3.0	1.5	------	.64	------	.07	------			------
TOTAL	2.95	4.33	186.77	59.8	38.9	31.85	17.43	6.78	.53	0	0	0
MEAN	.095	.14	6.02	1.93	1.34	1.03	.58	.22	.018	0	0	0
MAX	.23	.16	80	2.8	1.6	1.4	.68	.40	.06	0	0	0
MIN	0	.14	.13	1.5	1.2	.64	.41	.07	0	0	0	0
AC-FT	5.9	8.6	370	119	77	63	35	13	1.1	0	0	0

CAL YR 1971 TOTAL 524.30 MEAN 1.44 MAX 80 MIN 0 AC-FT 1,040
WTR YR 1972 TOTAL 349.34 MEAN .95 MAX 80 MIN 0 AC-FT 693

PEAK DISCHARGE (BASE, 50 CFS).--Dec. 25 (0015) 250 cfs (7.30 ft).

10258100 PALM CANYON CREEK TRIBUTARY NEAR ANZA, CALIF.

LOCATION.--Lat 33°34'08", long 116°30'43", in SW¼NE¼NW¼ sec.18, T.7 S., R.5 E., Riverside County, in San Bernardino National Forest, on left bank at culvert on State Highway 74, or Pines to Palms Highway, and 9.4 miles east of Anza.

DRAINAGE AREA.--0.47 sq mi.

PERIOD OF RECORD.--Water years 1962-67 (annual maximum), February 1967 to current year.

GAGE.--Water-stage recorder with rain-gage attachment and crest-stage gage. Altitude of gage is 4,500 ft (from topographic map). Nov. 8, 1961, to Feb. 15, 1967, crest-stage gage only at same site and datum.

AVERAGE DISCHARGE.--5 years, 0.003 cfs (2.1 acre-ft per year).

EXTREMES.--Current year: No flow during year.
Period of record: Maximum discharge, 28 cfs Aug. 30, 1967 (gage height, 6.23 ft, 5.92 ft from crest-stage gage), on basis of computation of maximum flow through culvert; no flow most of each year.

REMARKS.--No flow since Aug. 17, 1971. No regulation or diversion above station. Monthly precipitation, in inches, is as follows: October, 0.6; November, 0.1; December, 2.6; February, 0.1; May, 0.1; June, 0.7; August, 0.3; September, 0.1; the water year, 4.6. Discharge for the calendar year 1971 is as follows: Maximum daily, 0.55 cfs; minimum, zero; mean, 0.002 cfs; total, 1.1 acre-ft.

10258500 PALM CANYON CREEK NEAR PALM SPRINGS, CALIF.

LOCATION.--Lat 33°44'42", long 116°32'05", in NE¼SW¼SE¼ sec.11, T.5 S., R.4 E., Riverside County, on right bank 0.8 mile upstream from Murray Canyon Creek, and 6 miles south of Palm Springs.

DRAINAGE AREA.--93.3 sq mi.

PERIOD OF RECORD.--January 1930 to January 1942, October 1947 to current year.

GAGE.--Water-stage recorder. Altitude of gage is 700 ft (from topographic map). Prior to Jan. 14, 1942, at datum 0.2 ft higher.

AVERAGE DISCHARGE.--36 years (1930-41, 1947-72), 3.48 cfs (2,520 acre-ft per year); median of yearly mean discharges, 0.5 cfs (360 acre-ft per year).

EXTREMES.--Current year: No flow during year.
Period of record: Maximum discharge, 3,850 cfs Feb. 6, 1937 (gage height, 5.80 ft, present datum), from rating curve extended above 120 cfs on basis of velocity-area measurement of maximum flow; no flow for several months in most years.

REMARKS.--No flow since Mar. 17, 1971. No regulation or diversion above station.

10259000 ANDREAS CREEK NEAR PALM SPRINGS, CALIF.

LOCATION.--Lat 33°45'36", long 116°32'57", in NW¼SE¼SE¼ sec.3, T.5 S., R.4 E., Riverside County, on left bank at Bureau of Indian Affairs diversion dam, 1.1 miles above mouth, and 5.1 miles south of Palm Springs.

DRAINAGE AREA.--8.61 sq mi.

PERIOD OF RECORD.--October 1948 to current year.

GAGE.--Water-stage recorder and concrete control. Altitude of gage is 800 ft (from topographic map). Prior to Mar. 25, 1949, reference point at same site at different datum.

AVERAGE DISCHARGE.--24 years, 2.16 cfs (1,560 acre-ft per year); median of yearly mean discharges, 1.5 cfs (1,100 acre-ft per year).

EXTREMES.--Current year: Maximum discharge, 224 cfs Dec. 24 (gage height, 2.66 ft); minimum daily, 0.09 cfs July 29, Aug. 2.
Period of record: Maximum discharge, 1,960 cfs Aug. 31, 1954 (gage height, 7.11 ft), from rating curve extended above 80 cfs on basis of slope-area measurement of maximum flow; no flow at times in some years.

REMARKS.--Records fair. No regulation above station. One small diversion for domestic use about one mile above station.

DISCHARGE, IN CUBIC FEET PER SECOND, WATER YEAR OCTOBER 1971 TO SEPTEMBER 1972

DAY	OCT	NOV	DEC	JAN	FEB	MAR	APR	MAY	JUN	JUL	AUG	SEP
1	.65	1.1	1.4	3.0	2.0	1.4	1.5	.97	.60	.22	.11	.19
2	.59	1.0	1.5	2.7	2.0	1.4	1.4	.83	.61	.18	.09	.15
3	.51	.98	1.6	2.7	2.0	1.4	1.4	.74	.63	.16	.13	.19
4	.47	.98	1.5	2.7	2.0	1.4	1.4	.63	.61	.17	.28	.38
5	.45	.97	1.5	2.9	2.0	1.5	1.4	.64	.64	.15	.31	.29
6	.42	.98	1.5	2.7	1.9	1.4	1.4	.61	.67	.20	.30	.28
7	.45	.98	1.6	2.7	1.8	1.4	1.3	.72	.94	.21	.31	.46
8	.46	.98	1.6	2.7	1.8	1.2	1.3	.99	.78	.27	.28	.46
9	.44	.98	1.6	2.7	1.8	.96	1.3	.94	.77	.25	.29	.47
10	.43	1.1	1.8	2.5	1.7	1.4	1.4	.95	.79	.17	.31	.46
11	.44	1.1	1.8	2.5	1.5	1.8	1.3	.92	.74	.17	.32	.48
12	.47	1.1	1.8	2.5	1.6	1.9	1.2	.88	.75	.19	.58	.39
13	.43	1.2	1.9	2.5	1.6	1.3	1.2	.81	.81	.26	.57	.32
14	.48	1.2	1.8	2.4	1.6	1.3	1.3	.74	.91	.24	.38	.29
15	.45	1.3	1.8	2.4	1.6	1.3	1.3	.70	1.0	.32	.29	.24
16	.90	1.3	1.9	2.4	1.6	1.3	1.2	.69	1.0	.41	.25	.22
17	.93	1.2	1.8	2.4	1.6	1.3	1.2	.69	1.1	.38	.23	.28
18	.82	1.3	1.8	2.4	1.6	1.3	1.2	.67	.99	.29	.27	.33
19	.91	1.3	1.8	2.2	1.6	1.3	1.3	.80	.91	.30	.32	.30
20	.89	1.4	1.8	2.2	1.6	1.3	1.3	.85	1.0	.26	.24	.29
21	.86	1.4	1.8	2.2	1.5	1.3	1.2	.80	1.0	.24	.20	.21
22	.81	1.4	9.5	2.1	1.6	1.1	1.2	.73	.80	.24	.15	.18
23	.79	1.3	7.9	2.0	1.6	1.3	1.2	.73	.74	.20	.11	.19
24	.83	1.3	61	2.0	1.6	1.4	1.2	.71	.68	.16	.18	.26
25	.85	1.4	29	2.0	1.6	1.5	1.2	.71	.59	.21	.19	.43
26	.85	1.4	9.0	2.1	1.6	1.5	1.1	.67	.52	.19	.22	.45
27	.85	1.3	5.0	2.1	1.6	1.5	1.0	.68	.45	.10	.23	.46
28	.86	1.3	4.1	2.1	1.6	1.5	1.0	.66	.36	.10	.27	.45
29	.97	1.3	3.5	1.9	1.4	1.5	.99	.59	.30	.09	.26	.38
30	1.1	1.4	3.2	1.9	------	1.6	.99	.62	.24	.25	.36	.33
31	1.1	------	3.0	2.0	------	1.5	------	.65	------	.36	.28	------
TOTAL	21.46	35.95	170.8	73.6	49.0	43.26	37.38	23.32	21.93	6.94	8.31	9.81
MEAN	.69	1.20	5.51	2.37	1.69	1.40	1.25	.75	.73	.22	.27	.33
MAX	1.1	1.4	61	3.0	2.0	1.9	1.5	.99	1.1	.41	.58	.48
MIN	.42	.97	1.4	1.9	1.4	.96	.99	.59	.24	.09	.09	.15
AC-FT	43	71	339	146	97	86	74	46	44	14	16	19

CAL YR 1971 TOTAL 603.51 MEAN 1.65 MAX 61 MIN .20 AC-FT 1,200
WTR YR 1972 TOTAL 501.76 MEAN 1.37 MAX 61 MIN .09 AC-FT 995

PEAK DISCHARGE (BASE, 30 CFS).--Dec. 24 (2315) 224 cfs (2.66 ft).

10259200 DEEP CREEK NEAR PALM DESERT, CALIF.

LOCATION.--Lat 33°37'52", long 116°23'29", in SE¼NE¼SE¼ sec.19, T.6 S., R.6 E., Riverside County, on left bank 500 ft downstream from unnamed tributary, and 6.3 miles south of Palm Desert.

DRAINAGE AREA.--30.6 sq mi.

PERIOD OF RECORD.--May 1962 to current year.

GAGE.--Water-stage recorder. Altitude of gage is 1,440 ft (from topographic map).

AVERAGE DISCHARGE.--10 years, 0.59 cfs (427 acre-ft per year); median of yearly mean discharges, 0.1 cfs (72 acre-ft per year).

EXTREMES.--Current year: Maximum discharge, 0.06 cfs Feb. 22-26, Mar. 3-9 (gage height, 1.36 ft); no flow most of year.
Period of record: Maximum discharge, 1,300 cfs Nov. 23, 1965 (gage height, 5.15 ft in gage well, 6.15 ft, from profile of floodmarks), from rating curve extended above 3.3 cfs on basis of slope-area measurements at gage heights 2.68 and 5.15 ft; no flow for much of each year.

REMARKS.--Records good. No regulation or diversion above station.

DISCHARGE, IN CUBIC FEET PER SECOND, WATER YEAR OCTOBER 1971 TO SEPTEMBER 1972

DAY	OCT	NOV	DEC	JAN	FEB	MAR	APR	MAY	JUN	JUL	AUG	SEP
1				0	.05	.05	.03					
2				0	.05	.05	.03					
3				0	.05	.06	.03					
4				0	.05	.06	.03					
5				0	.05	.06	.02					
6				0	.05	.06	.02					
7				0	.05	.06	.02					
8				0	.05	.06	.02					
9				0	.05	.06	.01					
10				0	.05	.05	0					
11				0	.05	.05	0					
12				0	.05	.05	0					
13				0	.05	.05	0					
14				0	.05	.05	0					
15				0	.05	.05	0					
16				0	.05	.05	0					
17				0	.05	.05	0					
18				0	.05	.05	0					
19				.01	.05	.05	0					
20				.02	.05	.05	0					
21				.03	.05	.05	0					
22				.04	.06	.05	0					
23				.04	.06	.05	0					
24				.04	.06	.05	0					
25				.04	.06	.05	0					
26				.05	.06	.05	0					
27				.05	.05	.05	0					
28				.05	.05	.04	0					
29				.05	.05	.04	0					
30				.05	------	.04	0					
31		------		.05	------	.04	------		------			------
TOTAL	0	0	0	.52	1.50	1.58	.21	0	0	0	0	0
MEAN	0	0	0	.017	.052	.051	.007	0	0	0	0	0
MAX	0	0	0	.05	.06	.06	.03	0	0	0	0	0
MIN	0	0	0	0	.05	.04	0	0	0	0	0	0
AC-FT	0	0	0	1.0	3.0	3.1	.4	0	0	0	0	0

CAL YR 1971 TOTAL 26.93 MEAN .074 MAX 9.3 MIN 0 AC-FT 53
WTR YR 1972 TOTAL 3.81 MEAN .010 MAX .06 MIN 0 AC-FT 7.6

PEAK DISCHARGE (BASE, 20 CFS).--No peak above base.

10259300 WHITEWATER RIVER AT INDIO, CALIF.

LOCATION.--Lat 33°44'06", long 116°14'39", in NW¼NE¼SW¼ sec.15, T.5 S., R.7 E., Riverside County, at center bridge pier on Interstate Highway 10, 2 miles northwest of Indio.

DRAINAGE AREA.--1,073 sq mi.

PERIOD OF RECORD.--March 1966 to current year.

GAGE.--Water-stage recorder and crest-stage gage. Altitude of gage is 5 ft (from topographic map).

AVERAGE DISCHARGE.--6 years, 3.86 cfs (2,800 acre-ft per year).

EXTREMES.--Current year: Maximum discharge, 31 cfs May 9 (gage height, 7.05 ft); no flow most of year.
Period of record: Maximum discharge, 11,400 cfs Jan. 25, 1969 (gage height, 14.41 ft), from rating curve extended above 1,300 cfs on basis of slope-area measurement at gage height 15.3 ft; no flow most of each year.
Flood of Mar. 2 or 3, 1938, 29,000 cfs, result of slope-area measurement at site 4.5 miles upstream.
Flood of Nov. 22, 1965, reached a stage of 15.3 ft, from floodmarks (discharge, 14,100 cfs, on basis of slope-area measurement of peak flow).

REMARKS.--Records poor. No regulation above station. Water diverted from tributary streams for municipal supply in vicinity of Palm Springs. At times water is released to river at Coachella Canal crossing, 0.8 mile upstream.

REVISIONS (WATER YEARS).--Revised figures of discharge, in cubic feet per second, for the water year 1971, superseding those published in WRD Calif. 1971, are given herewith:

1971	
Mar. 6	5.0
May 10	0

MONTH	CFS-DAYS	MAX	MIN	MEAN	AC-FT
March 1971	5.0	5.0	0	0.16	9.9
May	0	0	0	0	0
WTR YR 1971	5.0	5.0	0	.014	9.9

DISCHARGE, IN CUBIC FEET PER SECOND, WATER YEAR OCTOBER 1971 TO SEPTEMBER 1972

DAY	OCT	NOV	DEC	JAN	FEB	MAR	APR	MAY	JUN	JUL	AUG	SEP
1	0	0	0	0			0	0				
2	0	0	0	0			0	0				
3	0	0	0	0			0	0				
4	0	0	.25	.20			0	0				
5	0	0	.38	0			0	0				
6	0	0	0	0			0	0				
7	0	0	0	0			0	0				
8	0	0	0	0			0	0				
9	0	0	0	0			0	7.1				
10	0	0	0	0			0	0				
11	0	0	0	0			0	3.7				
12	0	0	0	0			0	0				
13	0	0	.25	0			0	0				
14	0	0	.20	0			0	0				
15	0	0	0	0			0	0				
16	0	0	0	0			0	0				
17	0	0	0	0			0	0				
18	0	0	0	0			0	0				
19	0	0	0	0			1.2	0				
20	0	0	0	0			1.3	0				
21	0	0	0	0			0	0				
22	0	0	0	0			0	0				
23	0	0	0	0			0	0				
24	0	0	0	0			0	0				
25	0	0	0	0			0	0				
26	0	0	0	0			0	0				
27	0	0	0	0			0	0				
28	0	0	.08	0			0	0				
29	0	.16	0	0			0	0				
30	0	0	0	0	------		0	0				
31	2.4	------	0	.91	------		------	0	------			------
TOTAL	2.4	.16	1.16	1.11	0	0	2.5	10.8	0	0	0	0
MEAN	.077	.005	.037	.036	0	0	.083	.35	0	0	0	0
MAX	2.4	.16	.38	.91	0	0	1.3	7.1	0	0	0	0
MIN	0	0	0	0	0	0	0	0	0	0	0	0
AC-FT	4.8	.3	2.3	2.2	0	0	5.0	21	0	0	0	0

CAL YR 1971 TOTAL 18.00 MEAN .049 MAX 14 MIN 0 AC-FT 36
WTR YR 1972 TOTAL 18.13 MEAN .050 MAX 7.1 MIN 0 AC-FT 36

PEAK DISCHARGE (BASE, 200 CFS).--No peak above base.

10259540 WHITEWATER RIVER NEAR MECCA, CALIF.

LOCATION.--Lat 33°31'29", long 116°04'36", in NW¼NW¼NW¼ sec.32, T.7 S., R.9 E., Riverside County, on left bank 1.6 miles upstream from mouth, and 3.3 miles south of Mecca.

DRAINAGE AREA.--1,494 sq mi.

PERIOD OF RECORD.--October 1960 to current year.

GAGE.--Water-stage recorder. Datum of gage is 221.00 ft below mean sea level (levels by Coachella County Water District). Oct. 1, 1960, to Mar. 22, 1967, at site 1.3 miles downstream and Mar. 23, 1967, to July 22, 1970, at site 0.7 mile downstream at different datums.

EXTREMES.--Period of record: Maximum daily discharge, 2,500 cfs (estimated) Jan. 25, 1969; minimum daily, 37 cfs Nov. 25-29, 1960.

REMARKS.--Records fair. Most of the flow represents seepage and return flow from irrigated areas.

COOPERATION.--Fifty-one discharge measurements furnished by Coachella Valley County Water District.

DISCHARGE, IN CUBIC FEET PER SECOND, WATER YEAR OCTOBER 1971 TO SEPTEMBER 1972

DAY	OCT	NOV	DEC	JAN	FEB	MAR	APR	MAY	JUN	JUL	AUG	SEP
1	110	112	104	94	131	140	124	137	128	132	136	137
2	110	112	104	94	120	145	120	137	124	132	137	145
3	110	110	104	94	119	146	119	146	126	130	137	140
4	108	112	104	100	119	146	124	151	126	130	138	140
5	112	119	106	104	120	138	126	143	120	125	138	143
6	116	110	106	106	116	137	128	143	124	130	140	143
7	120	101	107	108	118	131	126	146	138	132	128	142
8	113	101	108	112	119	131	130	143	128	137	128	142
9	110	116	110	108	119	142	130	137	124	130	125	140
10	106	106	110	108	119	146	126	142	124	126	132	137
11	97	92	113	126	120	149	125	143	118	119	138	132
12	112	102	113	132	122	142	130	145	114	126	138	137
13	104	98	132	132	122	134	142	142	118	132	138	143
14	106	106	126	126	112	113	137	145	110	132	140	145
15	106	97	110	126	124	112	134	138	119	128	134	148
16	110	90	112	126	124	110	132	119	119	134	126	137
17	102	91	101	122	125	126	131	119	124	130	126	137
18	97	91	125	116	130	130	131	124	124	120	134	136
19	98	100	178	136	131	131	125	120	118	118	134	125
20	97	106	122	134	130	132	126	120	119	116	125	112
21	97	107	87	131	134	136	113	125	120	125	120	119
22	97	106	95	114	128	132	113	122	120	125	125	119
23	98	106	94	113	126	136	116	126	113	136	126	119
24	97	106	97	110	131	140	118	124	119	140	132	120
25	94	106	107	110	131	145	116	125	119	134	134	122
26	100	104	98	112	136	137	124	132	116	143	140	128
27	97	106	104	112	136	126	130	128	116	148	143	130
28	98	104	104	116	142	126	136	122	116	149	138	126
29	118	104	102	118	140	126	142	120	116	148	126	125
30	118	104	94	118	------	126	138	120	130	149	134	124
31	116	------	94	118	------	125	------	131	------	138	136	------
TOTAL	3,274	3,125	3,371	3,576	3,644	4,136	3,812	4,115	3,630	4,094	4,126	3,993
MEAN	106	104	109	115	126	133	127	133	121	132	133	133
MAX	120	119	178	136	142	149	142	151	138	149	143	148
MIN	94	90	87	94	112	110	113	119	110	116	120	112
AC-FT	6,490	6,200	6,690	7,090	7,230	8,200	7,560	8,160	7,200	8,120	8,180	7,920

CAL YR 1971 TOTAL 40,084 MEAN 110 MAX 178 MIN 87 AC-FT 79,510
WTR YR 1972 TOTAL 44,896 MEAN 123 MAX 178 MIN 87 AC-FT 89,050

10259600 COTTONWOOD WASH NEAR COTTONWOOD SPRING, CALIF.

LOCATION.--Lat 33°44'40", long 115°49'35", in SW¼NW¼SE¼ sec.10, T.5 S., R.11 E., Riverside County, on right bank on Cottonwood Spring Road, 1 mile northwest of Cottonwood Spring.

DRAINAGE AREA.--0.71 sq mi.

PERIOD OF RECORD.--October 1959 to current year.

GAGE.--Water-stage recorder with rain-gage attachment, crest-stage gage, and corrugated-pipe culvert control. Altitude of gage is 3,100 ft (from topographic map).

AVERAGE DISCHARGE.--13 years, 0.0006 cfs (0.4 acre-ft per year); median of yearly mean discharges, zero.

EXTREMES.--Current year: No flow during year.
Period of record: Maximum discharge, 34 cfs Oct. 3, 1966 (gage height, 3.77 ft, from crest-stage gage), on basis of culvert computation of maximum flow; no flow most of each year.

REMARKS.--No flow since Aug. 28, 1971. No regulation or diversion above station. Monthly precipitation, in inches, is as follows: October, 0.1; December, 0.3; June, 0.2; the water year, 0.6. Figures for the calendar year 1971 are as follows: Maximum daily discharge, 0.5 cfs; minimum, zero; mean, 0.001 cfs; runoff, 1.0 acre-ft.

10259920 WASTEWAY NO. 1 NEAR MECCA, CALIF.

LOCATION.--Lat 33°31'40", long 115°58'23", in NW¼SW¼SW¼ sec.29, T.7 S., R.10 E., Riverside County, on right bank of channel, 1,000 ft upstream from mouth, 2,250 ft downstream from State Highway 111, and 6.6 miles southeast of Mecca.

PERIOD OF RECORD.--February 1966 to current year.

GAGE.--Water-stage recorder. Altitude of gage is 220 ft below mean sea level (from topographic map).

EXTREMES.--Period of record: Maximum daily discharge, 348 cfs Mar. 7, 1971; minimum daily, 2.0 cfs Dec. 26, 27, Mar. 8, 1970.

REMARKS.--Records poor. Discharge represents seepage and return flows from irrigated areas. At times water is wasted from Coachella Canal.

DISCHARGE, IN CUBIC FEET PER SECOND, WATER YEAR OCTOBER 1971 TO SEPTEMBER 1972

DAY	OCT	NOV	DEC	JAN	FEB	MAR	APR	MAY	JUN	JUL	AUG	SEP
1	5.2	15	3.8	204	3.5	4.8	4.8	4.1	3.8	4.1	4.8	5.5
2	5.2	6.4	3.8	118	4.4	4.8	20	4.1	4.1	4.1	4.4	5.5
3	16	9.2	3.8	23	4.4	4.8	65	4.1	3.8	4.1	4.4	5.5
4	52	4.4	3.8	3.5	115	4.8	4.4	4.1	3.8	4.1	5.2	5.2
5	65	4.4	3.8	3.5	18	4.8	4.4	4.1	3.8	4.1	5.5	5.2
6	4.4	4.4	4.1	3.8	4.8	4.4	4.4	4.1	3.8	4.1	5.5	5.2
7	4.4	4.4	3.8	3.8	4.4	4.1	4.4	4.1	3.8	4.1	5.2	5.2
8	4.4	4.4	4.1	93	4.4	4.4	4.4	4.1	3.8	4.1	5.5	5.5
9	4.4	4.4	4.1	68	4.4	4.4	4.4	4.1	3.8	65	5.5	5.5
10	4.4	4.4	4.1	52	4.4	4.1	4.4	4.1	3.8	49	5.5	5.5
11	4.8	4.4	4.1	41	4.4	4.1	4.8	4.1	3.8	4.1	7.7	5.2
12	4.8	4.4	33	198	4.4	4.1	4.8	4.1	112	4.1	5.5	5.2
13	4.8	4.4	53	5.2	4.4	5.2	4.8	4.1	3.8	4.1	5.5	5.2
14	4.8	4.1	4.1	4.8	4.4	4.1	4.8	4.1	3.8	4.1	5.5	5.5
15	4.8	3.8	4.1	4.4	4.8	4.4	5.5	4.1	3.8	4.1	5.5	5.5
16	4.4	3.5	20	49	4.8	4.4	5.5	4.1	3.8	4.1	5.5	5.5
17	4.4	3.5	4.1	4.1	4.4	4.4	64	4.1	3.8	4.1	5.5	4.8
18	4.4	3.5	4.1	72	4.4	4.4	4.8	4.1	3.8	4.1	5.5	4.8
19	46	3.5	3.8	4.4	4.4	4.4	5.5	4.1	3.8	4.1	5.2	4.4
20	3.8	3.5	26	4.4	4.4	4.4	5.5	4.1	3.8	4.1	4.8	4.4
21	3.8	3.5	3.8	4.4	4.4	4.4	5.2	4.1	3.8	4.1	23	4.4
22	3.8	3.5	3.8	21	4.4	4.4	4.8	24	3.8	4.4	16	4.4
23	3.8	3.5	4.1	84	4.4	4.4	4.8	43	3.8	5.2	5.5	4.4
24	3.8	3.5	4.1	19	4.4	4.4	4.8	34	3.8	5.2	5.5	4.4
25	4.1	3.5	28	4.1	4.4	4.4	4.8	3.8	3.8	5.2	5.5	4.4
26	47	3.5	69	4.1	4.4	4.1	4.8	3.8	3.8	5.2	5.5	4.4
27	9.0	3.5	22	4.1	4.4	3.8	4.4	3.8	3.8	5.2	5.5	4.4
28	4.4	48	3.8	4.1	4.4	4.1	4.4	3.8	3.8	5.2	5.5	4.4
29	4.4	47	20	128	4.4	4.4	4.4	3.8	3.8	5.2	5.5	4.4
30	4.4	3.8	3.8	56	------	4.4	4.1	3.8	3.8	5.5	5.5	4.4
31	64	------	62	80	------	4.8	------	3.8	------	4.8	5.5	------
TOTAL	404.9	223.3	419.9	1,368.7	252.1	136.9	277.1	213.7	222.5	243.0	196.2	148.3
MEAN	13.1	7.44	13.5	44.2	8.69	4.42	9.24	6.89	7.42	7.84	6.33	4.94
MAX	65	48	69	204	115	5.2	65	43	112	65	23	5.5
MIN	3.8	3.5	3.8	3.5	3.5	3.8	4.1	3.8	3.8	4.1	4.4	4.4
AC-FT	803	443	833	2,710	500	272	550	424	441	482	389	294

CAL YR 1971 TOTAL 4,695.4 MEAN 12.9 MAX 348 MIN 3.2 AC-FT 9,310
WTR YR 1972 TOTAL 4,106.6 MEAN 11.2 MAX 204 MIN 3.5 AC-FT 8,150

10260500 DEEP CREEK NEAR HESPERIA, CALIF.

LOCATION.--Lat 34°20'28", long 117°13'39", in NW¼NE¼SE¼ sec.18, T.3 N., R.3 W., San Bernardino County, on right bank 0.5 mile upstream from confluence with West Fork Mojave River, and 7 miles southeast of Hesperia.

DRAINAGE AREA.--136 sq mi.

PERIOD OF RECORD.--October 1904 to September 1922, October 1929 to current year. Monthly discharge only prior to January 1930, published in WSP 1314.

GAGE.--Water-stage recorder. Broad-crested weir since December 1938. Altitude of gage is 3,050 ft (from topographic map). See WSP 1314 for history of changes prior to Dec. 10, 1938.

AVERAGE DISCHARGE.--61 years, 68.0 cfs (49,270 acre-ft per year); median of yearly mean discharges, 41 cfs (29,700 acre-ft per year).

EXTREMES.--Current year: Maximum discharge, 8,910 cfs Dec. 24 (gage height, 7.42 ft); minimum daily, 0.84 cfs Aug. 31 to Sept. 2.
Period of record: Maximum discharge, 46,600 cfs Mar. 2, 1938, based on slope-area measurement of maximum flow; no flow July 17, 18, 1961.

REMARKS.--Records fair. Slight regulation by Lake Arrowhead (capacity, 48,000 acre-ft), used principally for recreation.

DISCHARGE, IN CUBIC FEET PER SECOND, WATER YEAR OCTOBER 1971 TO SEPTEMBER 1972

DAY	OCT	NOV	DEC	JAN	FEB	MAR	APR	MAY	JUN	JUL	AUG	SEP
1	2.0	7.6	7.8	49	21	17	12	7.4	7.0	1.8	1.0	.84
2	2.0	7.3	7.8	47	18	17	13	7.1	6.8	1.7	1.0	.84
3	2.1	7.1	7.9	43	17	17	12	7.1	6.5	1.6	.96	1.8
4	2.1	7.1	8.4	28	21	17	12	7.0	6.3	1.5	.96	4.2
5	2.2	7.1	7.9	58	21	17	12	6.9	6.2	1.4	.96	3.4
6	2.2	7.2	7.0	33	22	17	11	6.9	5.5	1.3	.96	3.8
7	2.2	6.8	7.4	31	21	17	9.9	7.3	7.3	1.3	.94	4.2
8	2.2	6.7	7.2	30	21	17	9.8	7.4	8.5	1.3	.94	3.4
9	2.3	6.3	7.0	26	23	16	9.6	7.3	8.1	1.2	.94	2.8
10	2.3	6.2	6.9	26	21	16	9.5	7.3	6.4	1.2	.94	2.4
11	2.3	6.1	6.7	26	19	15	9.5	7.2	5.6	1.2	.92	1.9
12	2.3	6.6	6.6	27	19	15	9.6	6.9	5.4	1.2	.92	1.8
13	2.3	9.3	6.5	28	18	15	9.7	6.7	5.2	1.2	.92	1.7
14	2.4	9.3	6.4	29	19	14	11	6.6	5.0	1.2	.92	1.6
15	2.4	8.6	6.4	30	19	14	10	6.4	4.8	1.2	.92	1.6
16	7.0	8.1	6.4	28	19	13	9.5	6.2	4.6	1.2	.90	1.5
17	8.0	7.8	6.3	28	19	13	9.4	6.3	4.5	1.2	.90	1.5
18	6.8	7.6	6.3	27	19	12	9.4	6.5	4.4	1.2	.90	1.5
19	6.1	7.3	6.3	26	19	12	12	7.3	4.3	1.2	.90	1.5
20	5.7	7.3	6.2	26	19	12	13	9.0	4.3	1.2	.90	1.5
21	5.5	6.7	6.2	24	19	11	12	9.4	4.2	1.1	.88	1.5
22	5.6	7.4	100	25	19	11	12	9.3	4.2	1.1	.88	1.5
23	5.1	7.6	157	25	18	11	9.9	8.9	3.8	1.1	.88	1.5
24	5.8	8.0	3,240	24	18	12	9.1	8.4	3.7	1.1	.88	1.5
25	9.0	7.7	2,400	24	18	13	8.2	8.1	3.1	1.1	.88	1.5
26	9.2	7.5	1,210	22	18	13	7.8	7.7	2.6	1.1	.86	1.5
27	8.2	7.6	259	22	18	13	7.9	8.0	2.4	1.1	.86	1.5
28	7.8	7.7	144	21	18	13	7.8	8.9	2.2	1.1	.86	1.5
29	8.7	7.8	99	22	18	13	7.7	8.0	2.1	1.0	.86	1.5
30	8.1	7.7	70	20	------	13	7.6	7.9	2.0	1.0	.86	1.6
31	7.6	------	59	16	------	13	------	7.6	------	1.0	.84	------
TOTAL	147.5	223.1	7,883.6	891	559	439	303.9	233.0	147.0	38.1	28.24	58.88
MEAN	4.76	7.44	254	28.7	19.3	14.2	10.1	7.52	4.90	1.23	.91	1.96
MAX	9.2	9.3	3,240	58	23	17	13	9.4	8.5	1.8	1.0	4.2
MIN	2.0	6.1	6.2	16	17	11	7.6	6.2	2.0	1.0	.84	.84
AC-FT	293	443	15,640	1,770	1,110	871	603	462	292	76	56	117

CAL YR 1971 TOTAL 13,498.98 MEAN 37.0 MAX 3,240 MIN .81 AC-FT 26,780
WTR YR 1972 TOTAL 10,952.32 MEAN 29.9 MAX 3,240 MIN .84 AC-FT 21,720

PEAK DISCHARGE (BASE, 400 CFS).--Dec. 24 (1830) 8,910 cfs (7.42 ft).

10261100 MOJAVE RIVER BELOW FORKS RESERVOIR, NEAR HESPERIA, CALIF.

LOCATION.--Lat 34°20'38", long 117°14'15", in SW¼NE¼SW¼ sec.18, T.3 N., R.3 W., San Bernardino County, on left bank of reservoir outlet channel, 6.5 miles southeast of Hesperia.

DRAINAGE AREA.--211 sq mi.

PERIOD OF RECORD.--October 1971 to September 1972.

GAGE.--Water-stage recorder. Altitude of gage is 3,000 ft (from topographic map).

EXTREMES.--Current year: Maximum discharge, 5,000 cfs Dec. 24, on basis of computation of flow through dam; maximum gage height, 4.50 ft Dec. 23; minimum daily discharge, 0.69 cfs Aug. 7-27.

REMARKS.--Records fair except those above 430 cfs, which are poor. Flow partially regulated by Lake Arrowhead (capacity, 48,000 acre-ft) used principally for recreation, Silverwood Lake (capacity, 78,000 acre-ft) used for water distribution and recreation, and Mojave Forks Reservoir (capacity, 79,800 acre-ft) used for flood control with ungated opening, capacity, 23,500 cfs.

DISCHARGE, IN CUBIC FEET PER SECOND, WATER YEAR OCTOBER 1971 TO SEPTEMBER 1972

DAY	OCT	NOV	DEC	JAN	FEB	MAR	APR	MAY	JUN	JUL	AUG	SEP
1	1.2	6.8	6.3	73	22	18	14	7.8	7.0	2.7	1.0	.84
2	1.2	6.4	6.3	71	22	17	14	7.8	7.0	2.7	1.0	.84
3	1.2	6.4	6.3	67	22	17	12	7.4	6.6	2.7	.86	1.9
4	1.2	6.0	7.0	48	22	17	13	7.0	6.3	2.7	.84	2.5
5	1.3	6.0	7.0	47	22	18	14	7.0	6.0	2.1	.84	2.9
6	1.4	6.0	7.0	54	22	18	12	7.0	5.1	2.1	.84	3.7
7	1.4	6.3	7.0	54	22	18	12	7.8	6.0	2.1	.69	4.2
8	1.4	6.3	6.6	51	22	18	12	7.8	6.6	2.1	.69	3.4
9	1.4	6.3	6.3	47	22	18	12	7.8	7.0	2.1	.69	2.9
10	1.5	6.3	7.4	47	22	17	11	7.8	6.3	2.1	.69	1.9
11	1.5	6.3	7.4	47	21	17	9.8	7.0	5.7	2.1	.69	1.7
12	1.5	6.3	7.0	46	21	17	9.8	6.6	5.4	2.1	.69	1.7
13	1.5	9.8	7.4	47	21	17	10	7.0	5.1	1.9	.69	1.7
14	1.5	9.0	7.8	47	20	17	10	7.0	4.8	1.9	.69	1.9
15	1.5	7.4	8.2	47	20	16	9.8	7.0	4.8	1.9	.69	1.9
16	5.8	7.0	7.4	46	20	16	9.8	7.0	4.8	1.7	.69	1.7
17	6.8	7.0	7.0	45	20	16	9.8	7.4	4.2	1.7	.69	1.7
18	5.8	7.0	8.2	43	20	14	9.8	7.8	4.2	1.5	.69	1.7
19	5.0	7.0	8.2	41	20	14	9.8	9.0	4.2	1.7	.69	1.5
20	3.6	7.0	8.2	40	20	13	9.8	9.8	4.2	1.7	.69	1.3
21	3.5	6.6	8.2	40	19	12	9.8	11	4.2	1.5	.69	1.3
22	4.2	6.3	74	41	19	12	10	11	3.7	1.3	.69	1.5
23	3.8	6.3	215	41	18	12	9.8	9.8	3.7	1.3	.69	1.3
24	4.6	6.3	1,700	39	18	12	9.4	8.6	3.9	1.5	.69	1.3
25	6.4	6.6	3,000	36	18	12	9.8	8.6	3.9	1.5	.69	1.3
26	7.8	6.3	2,100	33	18	12	10	7.8	3.7	1.3	.69	1.3
27	7.0	7.0	360	31	18	12	9.8	7.4	3.4	1.2	.69	1.3
28	6.7	7.0	223	28	18	12	9.0	7.4	3.4	1.2	.84	1.3
29	7.2	6.6	137	26	18	12	8.2	7.4	3.2	1.2	.84	1.3
30	7.0	6.3	109	24	------	12	7.8	7.4	2.7	1.2	.84	1.5
31	6.8	------	88	22	------	12	------	7.4	------	1.2	.84	------
TOTAL	112.7	201.9	8,158.2	1,369	587	465	318.0	244.6	147.1	56.0	23.23	55.28
MEAN	3.64	6.73	263	44.2	20.2	15.0	10.6	7.89	4.90	1.81	.75	1.84
MAX	7.8	9.8	3,000	73	22	18	14	11	7.0	2.7	1.0	4.2
MIN	1.2	6.0	6.3	22	18	12	7.8	6.6	2.7	1.2	.69	.84
AC-FT	224	400	16,180	2,720	1,160	922	631	485	292	111	46	110

WTR YR 1972 TOTAL 11,738.01 MEAN 32.1 MAX 3,000 MIN .69 AC-FT 23,280

10261500 MOJAVE RIVER AT LOWER NARROWS, NEAR VICTORVILLE, CALIF.

LOCATION.--Lat 34°34'23", long 117°19'11", in SW¼SW¼SE¼ sec.29, T.6 N., R.4 W., San Bernardino County, on left bank 650 ft upstream from bridge on county road, formerly U.S. Highway 66, 0.6 mile downstream from Atchison, Topeka, and Santa Fe Railway bridge, and 3 miles northwest of Victorville.

DRAINAGE AREA.--514 sq mi.

PERIOD OF RECORD.--February 1899 to September 1906, October 1930 to current year. Monthly discharge only for January to September 1906, October, November 1930, published in WSP 1314. Prior to October 1936, published as "at Victorville" and as "near Victorville" in 1937.

GAGE.--Water-stage recorder. Datum of gage is 2,642.97 ft above mean sea level. See WSP 1314 for history of gage changes prior to Mar. 28, 1938. Mar. 28, 1938, to Apr. 14, 1966, at site 350 ft upstream at datum 5.00 ft higher; Apr. 14, 1966, to July 17, 1969, at site 350 ft upstream at datum 3.00 ft higher.

AVERAGE DISCHARGE.--49 years, 74.9 cfs (54,260 acre-ft per year); median of yearly mean discharges, 37 cfs (26,800 acre-ft per year).

EXTREMES.--Current year: Maximum discharge, 4,160 cfs Dec. 24 (gage height, 5.83 ft); minimum daily, 10 cfs Sept. 19.
Period of record: Maximum discharge, 70,600 cfs Mar. 2, 1938 (gage height, 23.7 ft, present datum), from rating curve extended above 10,000 cfs on basis of slope-area measurement of maximum flow; minimum daily, 6 cfs Aug. 19, 21, 26, 1951.

REMARKS.--Records poor. Slight regulation by Lake Arrowhead (capacity, 48,000 acre-ft) used principally for recreation, Silverwood Lake (capacity, 78,000 acre-ft) used for water distribution and recreation, and by Mojave Forks Reservoir since June 1970 (capacity, 89,700 acre-ft) with ungated opening, capacity, 23,500 cfs. Since 1970 effluent from Mojave State Fish Hatchery diverted to Spring Valley Lake. Diversions and pumping for irrigation of about 5,000 acres above station.

DISCHARGE, IN CUBIC FEET PER SECOND, WATER YEAR OCTOBER 1971 TO SEPTEMBER 1972

DAY	OCT	NOV	DEC	JAN	FEB	MAR	APR	MAY	JUN	JUL	AUG	SEP
1	18	22	30	25	24	23	22	18	14	15	12	15
2	19	25	30	25	24	23	22	18	14	15	12	15
3	20	26	30	25	25	22	22	18	14	15	13	15
4	21	31	30	25	24	22	22	18	14	15	13	16
5	22	34	30	25	24	22	22	18	14	15	13	15
6	22	34	30	25	24	22	22	19	14	15	13	18
7	22	32	32	28	24	22	22	19	23	15	18	20
8	22	28	31	30	25	22	22	20	14	13	13	20
9	22	26	30	31	25	22	22	19	14	15	13	20
10	25	72	30	31	25	22	22	19	14	15	13	19
11	25	82	30	31	26	22	21	19	14	15	13	18
12	25	43	30	28	28	22	21	19	14	16	13	15
13	25	37	30	24	26	22	21	18	14	15	13	14
14	26	37	30	28	25	22	21	18	14	13	13	15
15	41	37	30	28	25	22	21	19	14	11	13	14
16	34	37	30	30	24	22	21	14	14	11	13	12
17	32	37	30	28	24	22	21	15	14	12	13	12
18	39	37	30	28	24	22	20	15	14	12	13	11
19	43	37	30	26	24	22	20	15	14	12	13	10
20	43	37	30	25	24	22	20	15	14	13	13	11
21	39	37	30	25	24	22	20	15	15	12	13	12
22	37	37	30	25	23	22	20	14	15	11	13	12
23	37	37	36	26	23	22	20	14	15	11	12	13
24	43	37	426	28	23	22	19	14	15	11	13	13
25	45	34	1,450	28	23	22	19	14	15	12	13	15
26	39	31	1,540	26	23	22	19	15	15	13	13	15
27	41	30	150	28	23	22	19	14	15	13	14	15
28	39	30	37	28	23	22	19	12	15	13	15	16
29	37	30	30	28	23	22	18	12	15	13	15	16
30	32	30	27	28	------	22	18	13	15	12	15	16
31	26	------	25	26	------	22	------	13	------	12	15	------
TOTAL	961	1,084	4,384	842	702	684	618	503	439	411	414	448
MEAN	31.0	36.1	141	27.2	24.2	22.1	20.6	16.2	14.6	13.3	13.4	14.9
MAX	45	82	1,540	31	28	23	22	20	23	16	18	20
MIN	18	22	25	24	23	22	18	12	14	11	12	10
AC-FT	1,910	2,150	8,700	1,670	1,390	1,360	1,230	998	871	815	821	889

CAL YR 1971 TOTAL 13,733.8 MEAN 37.6 MAX 1,540 MIN 8.4 AC-FT 27,240
WTR YR 1972 TOTAL 11,490.0 MEAN 31.4 MAX 1,540 MIN 10 AC-FT 22,790

PEAK DISCHARGE (BASE, 200 CFS).--Dec. 24 (2230) 4,160 cfs (5.83 ft).

NOTE.--Stage-discharge relation indefinite Feb. 13 to May 2.

10262000 MOJAVE RIVER NEAR HODGE, CALIF.

LOCATION.--Lat 34°50'09", long 117°11'27", in SW¼SE¼SE¼ sec.28, T.9 N., R.3 W., San Bernardino County, at county bridge 1.5 miles north of Hodge, and 10.9 miles southwest of Barstow.

DRAINAGE AREA.--1,090 sq mi.

PERIOD OF RECORD.--October 1930 to September 1932, October 1970 to current year.

GAGE.--Water-stage recorder. Altitude of gage is 2,260 ft (from topographic map). Prior to Oct. 1, 1970, at different datum.

EXTREMES.--Current year: Maximum discharge, 590 cfs Dec. 26 (gage height, 6.55 ft), on basis of slope-conveyance computation of maximum flow; no flow most of year.
Period of record: Maximum discharge, 8,900 cfs Feb. 9, 1932 (gage height, 5.20 ft, datum then in use); no flow most of each year.

REMARKS.--Records fair. Slight regulation by Lake Arrowhead (capacity, 48,000 acre-ft) used principally for recreation, Silverwood Lake (capacity, 78,000 acre-ft) used for water distribution and recreation, and Mojave Forks Reservoir (capacity, 89,700 acre-ft) with ungated opening, capacity, 23,500 cfs. Diversion and pumping for irrigation of about 12,000 acres above station.

DISCHARGE, IN CUBIC FEET PER SECOND, WATER YEAR OCTOBER 1971 TO SEPTEMBER 1972

DAY	OCT	NOV	DEC	JAN	FEB	MAR	APR	MAY	JUN	JUL	AUG	SEP
1			0									
2			0									
3			0									
4			0									
5			0									
6			0									
7			0									
8			0									
9			0									
10			0									
11			0									
12			0									
13			0									
14			0									
15			0									
16			0									
17			0									
18			0									
19			0									
20			0									
21			0									
22			0									
23			0									
24			0									
25			4.8									
26			255									
27			74									
28			.12									
29			0									
30			0		------							
31		------	0		------		------		------			------
TOTAL	0	0	333.92	0	0	0	0	0	0	0	0	0
MEAN	0	0	10.8	0	0	0	0	0	0	0	0	0
MAX	0	0	255	0	0	0	0	0	0	0	0	0
MIN	0	0	0	0	0	0	0	0	0	0	0	0
AC-FT	0	0	662	0	0	0	0	0	0	0	0	0

CAL YR 1971 TOTAL 333.92 MEAN .91 MAX 255 MIN 0 AC-FT 662
WTR YR 1972 TOTAL 333.92 MEAN .91 MAX 255 MIN 0 AC-FT 662

10262500 MOJAVE RIVER AT BARSTOW, CALIF.

LOCATION.--Lat 34°54'25", long 117°01'19", in SE¼SW¼SW¼ sec.31, T.10 N., R.1 W., San Bernardino County. on left bank 75 ft upstream from bridge on U.S. Highway 91 at Barstow.

DRAINAGE AREA.--1,290 sq mi.

PERIOD OF RECORD.--October 1930 to current year.

GAGE.--Water-stage recorder. Datum of gage is 2,089.80 ft above mean sea level.

AVERAGE DISCHARGE.--42 years, 24.2 cfs (17,530 acre-ft per year); median of yearly mean discharges, zero.

EXTREMES.--Current year: Maximum discharge, 256 cfs Dec. 26 (gage height, 2.94 ft), on basis of slope-conveyance computation of maximum flow; no flow most of year.
Period of record: Maximum discharge, 64,300 cfs Mar. 3, 1938 (gage height, 8.60 ft), on basis of slope-area measurement of maximum flow; no flow for several months in each year.

REMARKS.--Records poor. Slight regulation by Lake Arrowhead (capacity, 48,000 acre-ft) used principally for recreation, Silverwood Lake (capacity, 78,000 acre-ft) used for water distribution and recreation, and Mojave Forks Reservoir (capacity, 89,700 acre-ft) with ungated opening, capacity, 23,500 cfs. Diversions and pumping for irrigation of about 15,000 acres above station.

DISCHARGE, IN CUBIC FEET PER SECOND, WATER YEAR OCTOBER 1971 TO SEPTEMBER 1972

DAY	OCT	NOV	DEC	JAN	FEB	MAR	APR	MAY	JUN	JUL	AUG	SEP
1			0						0			
2			0						0			
3			0						0			
4			0						0			
5			0						0			
6			0						0			
7			0						2.4			
8			0						0			
9			0						0			
10			0						0			
11			0						0			
12			0						0			
13			0						0			
14			0						0			
15			0						0			
16			0						0			
17			0						0			
18			0						0			
19			0						0			
20			0						0			
21			0						0			
22			0						0			
23			0						0			
24			0						0			
25			4.6						0			
26			15						0			
27			0						0			
28			0						0			
29			0						0			
30			0		------				0			
31		------	0		------		------		------			------
TOTAL	0	0	19.6	0	0	0	0	0	2.4	0	0	0
MEAN	0	0	.63	0	0	0	0	0	.080	0	0	0
MAX	0	0	15	0	0	0	0	0	2.4	0	0	0
MIN	0	0	0	0	0	0	0	0	0	0	0	0
AC-FT	0	0	39	0	0	0	0	0	4.8	0	0	0

CAL YR 1971 TOTAL 19.60 MEAN .054 MAX 15 MIN 0 AC-FT 39
WTR YR 1972 TOTAL 22.00 MEAN .060 MAX 15 MIN 0 AC-FT 44

PEAK DISCHARGE (BASE, 100 CFS).--Dec. 26 (1030) 256 cfs (2.94 ft).

10262600 BOOM CREEK NEAR BARSTOW, CALIF.

LOCATION.--Lat 34°54'20", long 116°56'57", in NE¼NW¼NE¼ sec.2, T.9 N., R.1 W., San Bernardino County, at culvert on U.S. Highways 91 and 466, 4.3 miles east of Barstow.

DRAINAGE AREA.--0.24 sq mi.

PERIOD OF RECORD.--Water years 1959-66 (annual maximum), October 1966 to current year.

GAGE.--Water-stage recorder with rain-gage attachment and culvert control. Altitude of gage is 2,280 ft (from topographic map). Jan. 13, 1959, to Feb. 8, 1967, crest-stage gage at same site and datum.

AVERAGE DISCHARGE.--6 years, 0.003 cfs (2.2 acre-ft per year).

EXTREMES.--Current year: Maximum discharge, 34 cfs June 7 (gage height, 10.18 ft); no flow except June 2, 7. Period of record: Maximum discharge, 125 cfs Sept. 1, 1960 (gage height, 14.23 ft), on basis of computation of maximum flow through culvert; no flow most of each year.

REMARKS.--Records fair. No regulation or diversion above station.

DISCHARGE, IN CUBIC FEET PER SECOND, WATER YEAR OCTOBER 1971 TO SEPTEMBER 1972

DAY	OCT	NOV	DEC	JAN	FEB	MAR	APR	MAY	JUN	JUL	AUG	SEP
1									0			
2									.46			
3									0			
4									0			
5									0			
6									0			
7									1.4			
8									0			
9									0			
10									0			
11									0			
12									0			
13									0			
14									0			
15									0			
16									0			
17									0			
18									0			
19									0			
20									0			
21									0			
22									0			
23									0			
24									0			
25									0			
26									0			
27									0			
28									0			
29									0			
30					------				0			
31		------			------		------		------			------
TOTAL	0	0	0	0	0	0	0	0	1.86	0	0	0
MEAN	0	0	0	0	0	0	0	0	.062	0	0	0
MAX	0	0	0	0	0	0	0	0	1.4	0	0	0
MIN	0	0	0	0	0	0	0	0	0	0	0	0
AC-FT	0	0	0	0	0	0	0	0	3.7	0	0	0
(a)	0	0	.4	0	0	0	0	0	.6	0	0	0

CAL YR 1971 TOTAL 0.00 MEAN .0000 MAX .00 MIN 0 AC-FT .0
WTR YR 1972 TOTAL 1.86 MEAN .0050 MAX 1.4 MIN 0 AC-FT 3.7

a Precipitation, in inches.

10263000 MOJAVE RIVER AT AFTON, CALIF.

LOCATION.--Lat 35°02'14", long 116°23'00", in SW¼NW¼SE¼ sec.18, T.11 N., R.6 E., San Bernardino County, on downstream end of right pier of Union Pacific Railroad bridge, 0.3 mile west of Afton.

DRAINAGE AREA.--2,120 sq mi.

PERIOD OF RECORD.--October 1929 to September 1932, October 1952 to current year. Records for the water year 1930 incomplete, yearly estimate published in WSP 1314.

GAGE.--Water-stage recorder. Datum of gage is 1,400.15 ft above mean sea level. Dec. 21, 1929, to Sept. 30, 1932, at site 1.7 miles downstream at different datum.

AVERAGE DISCHARGE.--23 years, 6.13 cfs (4,440 acre-ft per year); median of yearly mean discharges, 1.0 cfs (720 acre-ft per year).

EXTREMES.--Current year: Maximum discharge, 4,900 cfs Aug. 13 (gage height, 8.48 ft, from floodmarks), on basis of slope-area measurement of maximum flow; no flow June 16 to Aug. 12.
Period of record: Maximum discharge, 18,000 cfs Jan. 26, 1969 (gage height, 10.40 ft), from rating curve extended above 3,200 cfs on basis of slope-area measurement of maximum flow; no flow for some days in many years.

REMARKS.--Records fair. Natural flow affected by ground-water withdrawals, diversions, municipal use, and storage in two small reservoirs.

DISCHARGE, IN CUBIC FEET PER SECOND, WATER YEAR OCTOBER 1971 TO SEPTEMBER 1972

DAY	OCT	NOV	DEC	JAN	FEB	MAR	APR	MAY	JUN	JUL	AUG	SEP
1	.12	.72	.85	.72	.85	.92	.54	.21	.06		0	.16
2	.18	.72	.85	.72	.85	.92	.54	.21	.12		0	.16
3	.18	.72	.85	.72	.85	.92	.54	.21	.16		0	.16
4	.18	.72	.85	.72	.85	.92	.54	.18	.10		0	.16
5	.18	.72	.85	.72	.85	.92	.54	.16	.14		0	.16
6	.16	.72	.85	.72	.92	.92	.49	.18	.16		0	.16
7	.18	.78	.85	.72	.92	.85	.44	.18	.16		0	.16
8	.21	.78	.85	.72	1.0	.78	.44	.18	.14		0	.16
9	.24	.78	.85	.72	1.0	.78	.44	.18	.10		0	.16
10	.24	.85	.85	.72	1.0	.78	.44	.18	.10		0	.16
11	.24	.85	.85	.72	1.0	.78	.44	.18	.08		0	.16
12	.24	.85	.85	.78	1.0	.78	.44	.18	.06		0	.16
13	.24	.85	.85	.78	1.0	.78	.44	.16	.02		139	.18
14	.24	.85	.85	.78	1.0	.78	.44	.16	.02		.44	.18
15	.21	.85	.85	.78	1.0	.72	.44	.16	.01		.12	.18
16	.27	.85	.85	.78	1.0	.72	.39	.12	0		.10	.18
17	.39	.85	.85	.78	1.0	.66	.35	.08	0		.10	.18
18	.44	.85	.85	.78	1.0	.60	.35	.08	0		.10	.18
19	.44	.85	.85	.78	1.0	.60	.39	.14	0		.12	.18
20	.49	.85	.85	.78	.92	.54	.39	.21	0		.12	.21
21	.49	.85	.85	.78	.92	.54	.39	.21	0		.12	.24
22	.49	.85	.85	.78	1.0	.54	.35	.21	0		.12	.24
23	.54	.85	.85	.78	1.0	.54	.31	.21	0		.10	.24
24	.54	.85	.85	.78	1.0	.54	.27	.18	0		.12	.24
25	.54	.85	.85	.85	1.0	.54	.27	.16	0		.10	.24
26	.54	.85	.78	.85	1.0	.54	.27	.16	0		.12	.27
27	.54	.85	.72	.85	1.0	.54	.27	.16	0		.14	.27
28	.60	.85	.72	.85	1.0	.54	.24	.14	0		.16	.27
29	.66	.85	.72	.85	.92	.54	.21	.14	0		.16	.31
30	.66	.85	.72	.85	------	.54	.21	.10	0		.18	.31
31	.72	------	.72	.85	------	.54	------	.06	------		.18	------
TOTAL	11.39	24.51	25.63	24.01	27.85	21.61	11.81	5.07	1.43	0	141.60	6.02
MEAN	.37	.82	.83	.77	.96	.70	.39	.16	.048	0	4.57	.20
MAX	.72	.85	.85	.85	1.0	.92	.54	.21	.16	0	139	.31
MIN	.12	.72	.72	.72	.85	.54	.21	.06	0	0	0	.16
AC-FT	23	49	51	48	55	43	23	10	2.8	0	281	12

CAL YR 1971 TOTAL 190.52 MEAN .52 MAX 1.0 MIN 0 AC-FT 378
WTR YR 1972 TOTAL 300.93 MEAN .82 MAX 139 MIN 0 AC-FT 597

PEAK DISCHARGE (BASE, 100 CFS).--Aug. 13 (1615) 4,900 cfs (8.48 ft).

10263500 BIG ROCK CREEK NEAR VALYERMO, CALIF.

LOCATION.--Lat 34°25'15", long 117°50'19", in NW¼SE¼NE¼ sec.20, T.4 N., R.9 W., Los Angeles County, on left bank 0.1 mile upstream from Punchbowl Canyon, and 1.9 miles southeast (revised) of Valyermo.

DRAINAGE AREA.--22.9 sq mi.

PERIOD OF RECORD.--January 1923 to current year. Monthly discharge only for October 1937 to January 1939, published in WSP 1314. Prior to October 1954, published as Rock Creek near Valyermo.

GAGE.--Water-stage recorder. Altitude of gage is 4,050 ft (from topographic map). Prior to May 4, 1938, at same site at different datums. May 4, 1938, to Jan. 26, 1939, at site 0.2 mile downstream (below Punchbowl Canyon) at different datum.

AVERAGE DISCHARGE.--49 years, 16.0 cfs (11,590 acre-ft per year); median of yearly mean discharges, 9.6 cfs (6,900 acre-ft per year).

EXTREMES.--Current year: Maximum discharge, 288 cfs Dec. 24 (gage height, 4.79 ft); minimum daily, 1.6 cfs Sept. 28, 29.
Period of record: Maximum discharge, 8,300 cfs Mar. 2, 1938, on basis of slope-area measurement of maximum flow; minimum daily, 0.70 cfs Nov. 5, 1951.

REMARKS.--Records fair. No regulation or diversion above station. Some infiltration into the streambed in the immediate vicinity of station. Records of water temperatures for the current year are published in Part 2 of this report.

COOPERATION.--Five discharge measurements furnished by Los Angeles County Flood Control District.

DISCHARGE, IN CUBIC FEET PER SECOND, WATER YEAR OCTOBER 1971 TO SEPTEMBER 1972

DAY	OCT	NOV	DEC	JAN	FEB	MAR	APR	MAY	JUN	JUL	AUG	SEP
1	4.0	4.1	4.4	12	11	9.4	9.5	7.6	5.4	4.4	4.0	3.4
2	4.0	4.1	4.8	12	12	9.5	9.5	7.3	5.4	4.0	3.9	3.4
3	3.9	3.8	5.0	12	12	9.3	10	7.3	5.2	4.0	3.9	3.4
4	3.9	3.8	5.0	12	11	9.2	10	6.8	5.0	4.0	4.2	3.3
5	3.8	3.8	5.0	12	11	9.5	11	6.7	4.9	4.0	4.3	3.3
6	3.8	3.8	5.0	12	11	9.9	11	6.5	4.8	3.8	4.6	3.3
7	3.7	3.8	5.1	12	9.0	10	11	6.3	5.5	3.8	4.3	3.3
8	3.6	3.8	5.0	12	9.0	10	10	6.4	5.4	3.8	4.2	3.0
9	3.6	3.8	5.0	12	9.0	9.9	10	6.0	5.4	4.1	4.4	3.0
10	3.5	3.8	5.0	12	9.3	9.7	11	6.0	5.4	3.9	4.4	2.9
11	3.5	3.8	5.0	12	9.4	9.7	11	5.8	5.4	3.9	4.3	3.0
12	3.5	4.2	5.4	12	9.2	9.5	10	5.7	5.4	3.9	4.6	2.7
13	3.4	4.1	5.4	12	9.0	9.5	9.5	5.6	5.4	3.8	4.5	2.6
14	3.5	4.2	5.0	12	9.0	9.4	9.0	6.3	5.4	3.7	4.7	2.5
15	3.7	4.4	5.0	13	9.0	9.3	9.0	6.0	5.4	4.0	4.7	2.5
16	4.1	4.4	5.2	13	9.0	9.3	8.5	6.0	5.4	4.0	4.6	2.2
17	4.6	4.4	5.4	12	8.8	9.3	8.0	5.7	5.4	4.0	4.6	2.2
18	4.5	4.4	5.4	11	9.2	9.4	9.0	5.4	5.4	4.1	5.3	2.3
19	4.3	4.4	5.4	11	9.1	9.4	9.0	5.8	5.4	4.0	4.9	2.3
20	4.0	4.4	5.4	11	8.9	9.3	8.3	5.8	5.4	4.0	4.7	2.0
21	4.0	4.4	5.8	11	8.9	9.4	9.3	5.8	5.4	4.4	4.6	2.0
22	4.0	4.7	9.2	10	8.9	9.4	9.2	5.4	5.4	4.4	4.5	2.0
23	4.0	4.7	9.0	10	9.0	9.6	8.4	5.4	5.4	4.1	4.2	2.0
24	4.2	4.7	190	10	8.9	9.4	8.3	5.0	5.4	4.2	4.2	1.8
25	4.4	4.7	90	11	8.8	9.4	8.4	5.0	5.0	4.1	4.1	1.8
26	4.2	4.6	58	11	9.2	9.4	8.2	4.7	5.0	4.4	4.0	1.8
27	4.1	4.5	20	12	9.0	9.5	7.9	4.7	5.0	4.3	3.9	1.8
28	4.1	4.4	12	12	9.3	9.5	7.9	4.7	5.0	4.3	4.0	1.6
29	4.1	4.4	12	12	9.4	9.5	7.4	5.8	4.7	4.3	3.9	1.6
30	4.3	4.4	12	11	------	10	7.4	5.8	4.4	4.1	3.8	1.7
31	4.2	------	12	11	------	9.5	------	5.6	------	4.5	3.5	------
TOTAL	122.5	126.8	531.9	360	276.3	295.1	276.7	182.9	157.1	126.3	133.8	74.7
MEAN	3.95	4.23	17.2	11.6	9.53	9.52	9.22	5.90	5.24	4.07	4.32	2.49
MAX	4.6	4.7	190	13	12	10	11	7.6	5.5	4.5	5.3	3.4
MIN	3.4	3.8	4.4	10	8.8	9.2	7.4	4.7	4.4	3.7	3.5	1.6
AC-FT	243	252	1,060	714	548	585	549	363	312	251	265	148

CAL YR 1971 TOTAL 3,525.6 MEAN 9.66 MAX 190 MIN 3.4 AC-FT 6,990
WTR YR 1972 TOTAL 2,664.1 MEAN 7.28 MAX 190 MIN 1.6 AC-FT 5,280

PEAK DISCHARGE (BASE, 50 CFS).--Dec. 24 (0730) 288 cfs (4.79 ft).

10264000 LITTLE ROCK CREEK NEAR LITTLE ROCK, CALIF.

LOCATION.--Lat 34°27'47", long 118°01'04", in SW¼SW¼NE¼ sec.3, T.4 N., R.11 W., Los Angeles County, on right bank 0.3 mile upstream from Santiago Creek, 1.6 miles upstream from Little Rock Palmdale Irrigation District's dam, and 5 miles south of Little Rock.

DRAINAGE AREA.--49.0 sq mi.

PERIOD OF RECORD.--October 1930 to February 1938, May to September 1938, April 1939 to current year.

GAGE.--Water-stage recorder. Altitude of gage is 3,290 ft (from topographic map). Prior to May 1943, at site 500 ft downstream at different datums (datum changed in March 1939).

AVERAGE DISCHARGE.--40 years (1930-37, 1939-72), 16.7 cfs (12,100 acre-ft per year); median of yearly mean discharges, 9.6 cfs (7,000 acre-ft per year).

EXTREMES.--Current year: Maximum discharge, 801 cfs Dec. 24 (gage height, 8.40 ft); no flow Oct. 1-31, July 11 to Sept. 30.
Period of record: Maximum discharge, 17,000 cfs (estimated) Mar. 2, 1938; no flow at times in most years.

REMARKS.--No regulation or diversion above station.

COOPERATION.--Records furnished by Los Angeles County Flood Control District and reviewed by Geological Survey.

DISCHARGE, IN CUBIC FEET PER SECOND, WATER YEAR OCTOBER 1971 TO SEPTEMBER 1972

DAY	OCT	NOV	DEC	JAN	FEB	MAR	APR	MAY	JUN	JUL	AUG	SEP
1		.30	1.8	19	11	8.3	4.7	2.4	1.9	.20		
2		.60	1.8	17	11	7.2	4.7	2.3	1.8	.20		
3		.60	1.8	16	9.4	6.9	4.6	2.3	1.8	.20		
4		1.1	1.8	16	10	7.0	4.6	2.3	1.8	.20		
5		1.1	1.8	15	9.6	8.0	4.5	2.2	1.8	.20		
6		1.1	1.8	15	9.9	9.0	4.5	2.2	1.7	.20		
7		1.1	1.8	15	9.2	10	4.4	2.2	5.2	.20		
8		1.6	1.8	16	9.2	9.5	4.4	2.1	5.6	.10		
9		1.6	1.8	16	8.8	8.6	4.3	2.1	2.2	.10		
10		1.6	1.8	16	8.6	8.6	4.2	2.1	1.0	.10		
11		1.6	1.8	16	8.6	7.5	4.1	2.1	1.6	0		
12		1.6	1.8	16	8.4	7.0	4.0	2.0	1.3	0		
13		1.6	1.8	17	8.4	6.5	3.9	2.0	1.2	0		
14		1.6	1.8	18	8.3	6.0	3.8	2.0	1.1	0		
15		1.6	1.8	16	8.3	6.3	3.7	2.0	1.1	0		
16		1.6	1.9	15	8.3	5.5	3.5	2.0	1.0	0		
17		1.6	1.9	14	8.2	5.5	3.4	2.0	1.0	0		
18		1.6	1.9	14	8.2	5.8	3.3	2.0	.90	0		
19		1.6	1.9	13	8.2	5.1	3.2	2.0	.80	0		
20		1.6	2.0	12	8.2	5.1	3.1	2.0	.80	0		
21		1.6	5.5	12	8.0	5.0	3.0	2.0	.70	0		
22		1.6	24	11	7.8	5.0	2.9	2.0	.60	0		
23		1.6	18	14	7.8	5.2	2.8	2.0	.60	0		
24		1.6	362	17	7.6	5.1	2.8	2.0	.50	0		
25		1.6	382	14	7.6	5.1	2.7	2.0	.50	0		
26		1.6	216	12	7.1	4.9	2.6	2.0	.50	0		
27		1.6	93	12	7.0	4.8	2.5	2.0	.56	0		
28		1.6	54	11	7.6	4.8	2.5	2.0	.76	0		
29		1.6	41	9.4	8.2	4.8	2.4	1.9	.25	0		
30		1.8	34	11	------	4.8	2.4	1.9	.20	0		
31		------	23	12	------	4.8	------	1.9	------	0		------
TOTAL	0	42.90	1,289.1	447.4	248.5	197.7	107.5	64.0	40.77	1.70	0	0
MEAN	0	1.43	41.6	14.4	8.57	6.38	3.58	2.06	1.36	.055	0	0
MAX	0	1.8	382	19	11	10	4.7	2.4	5.6	.20	0	0
MIN	0	.30	1.8	9.4	7.0	4.8	2.4	1.9	.20	0	0	0
AC-FT	0	85	2,560	887	493	392	213	127	81	3.4	0	0

CAL YR 1971 TOTAL 4,051.60 MEAN 11.1 MAX 382 MIN 0 AC-FT 8,040
WTR YR 1972 TOTAL 2,439.57 MEAN 6.67 MAX 382 MIN 0 AC-FT 4,840

10264560 SPENCER CANYON CREEK NEAR FAIRMONT, CALIF.

LOCATION.--Lat 34°46'33", long 118°34'08", in SE¼SW¼SW¼ sec.15, T.8 N., R.16 W., Los Angeles County, on county road culvert, 8.5 miles northwest of Fairmont.

DRAINAGE AREA.--3.60 sq mi.

PERIOD OF RECORD.--Water years 1959-64 (annual maximum), August 1964 to current year.

GAGE.--Flood-hydrograph recorder and crest-stage gage. Altitude of gage is 2,950 ft (from topographic map). Jan. 19, 1959, to Aug. 26, 1964, crest-stage gage at same site and datum.

AVERAGE DISCHARGE.--8 years (1964-72), 0.057 cfs (41 acre-ft per year).

EXTREMES.--Current year: No flow during year.
Period of record: Maximum discharge, 290 cfs Feb. 25, 1969 (gage height, 12.50 ft, from crest-stage gage), from rating curve based on computation of flow through culvert at gage heights 11.11, 11.29, and 11.90 ft; no flow most of each year.

REMARKS.--Records good. No regulation or diversion above station.

10264590 COTTONWOOD CREEK NEAR ROSAMOND, CALIF.

LOCATION.--Lat 34°53'08", long 118°26'11", in NE¼SW¼NE¼ sec.11, T.9 N., R.15 W., Kern County, on right side of culvert on dirt road 1.3 miles southeast of West Antelope aqueduct station, 8.2 miles west of town of Willow Springs, and 15.3 miles west of Rosamond.

DRAINAGE AREA.--35.7 sq mi.

PERIOD OF RECORD.--February 1965 to September 1972 (discontinued).

GAGE.--Flood-hydrograph recorder. Altitude of gage is 2,880 ft (from topographic map).

AVERAGE DISCHARGE.--7 years, 0.014 cfs (10 acre-ft per year).

EXTREMES.--Current year: Maximum discharge, 30 cfs (estimated) June 7; no flow except June 7.
Period of record: Maximum discharge, 260 cfs Feb. 25, 1969 (gage height, 22.17 ft), by computation of flow through culvert; no flow most of each year.

REMARKS.--Records poor. No regulation above station. Some pumping at Tejon Ranch Company headquarters for domestic use.

DISCHARGE, IN CUBIC FEET PER SECOND, WATER YEAR OCTOBER 1971 TO SEPTEMBER 1972

DAY	OCT	NOV	DEC	JAN	FEB	MAR	APR	MAY	JUN	JUL	AUG	SEP
1									0			
2									0			
3									0			
4									0			
5									0			
6									0			
7									1.2			
8									0			
9									0			
10									0			
11									0			
12									0			
13									0			
14									0			
15									0			
16									0			
17									0			
18									0			
19									0			
20									0			
21									0			
22									0			
23									0			
24									0			
25									0			
26									0			
27									0			
28									0			
29									0			
30					------				0			
31		------			------		------		------			------
TOTAL	0	0	0	0	0	0	0	0	1.2	0	0	0
MEAN	0	0	0	0	0	0	0	0	.040	0	0	0
MAX	0	0	0	0	0	0	0	0	1.2	0	0	0
MIN	0	0	0	0	0	0	0	0	0	0	0	0
AC-FT	0	0	0	0	0	0	0	0	2.4	0	0	0

CAL YR 1971 TOTAL 0.00 MEAN .0000 MAX .00 MIN 0 AC-FT .0
WTR YR 1972 TOTAL 1.20 MEAN .0030 MAX 1.2 MIN 0 AC-FT 2.4

10264600 OAK CREEK NEAR MOJAVE, CALIF.

LOCATION.--Lat 35°03'00", long 118°21'25", in NW¼ sec.15, T.11 N., R.14 W., Kern County, on upstream right wingwall of culvert, 100 ft downstream from unnamed tributary, 0.1 mile west of junction of Oak Creek and Willow Springs Roads, and 10.5 miles west of Mojave.

DRAINAGE AREA.--15.8 sq mi.

PERIOD OF RECORD.--August 1957 to current year.

GAGE.--Water-stage recorder and concrete control. Altitude of gage is 4,100 ft (from topographic map).

AVERAGE DISCHARGE.--15 years, 0.71 cfs (514 acre-ft per year); median of yearly mean discharges, 0.4 cfs (290 acre-ft per year).

EXTREMES.--Current year: Maximum gage height, 3.30 ft June 6 (discharge not determined); minimum daily discharge, 0.03 cfs Aug. 6-11, Aug. 23 to Sept. 4, Sept. 7-30.
Period of record: Maximum gage height, 3.30 ft June 6, 1972 (discharge not determined); no flow for some months in most years.

REMARKS.--Records good below 15 cfs and poor above. No regulation or diversion above station.

DISCHARGE, IN CUBIC FEET PER SECOND, WATER YEAR OCTOBER 1971 TO SEPTEMBER 1972

DAY	OCT	NOV	DEC	JAN	FEB	MAR	APR	MAY	JUN	JUL	AUG	SEP
1	.18	.22	.35	.46	.44	.29	.29	.34	.22	.10	.04	.03
2	.17	.22	.38	.47	.44	.28	.34	.34	.22	.14	.04	.03
3	.17	.22	.40	.47	.39	.28	.34	.34	.19	.10	.04	.03
4	.16	.22	.40	.41	.44	.28	.29	.34	.19	.10	.04	.03
5	.15	.22	.39	.40	.44	.27	.34	.34	.19	.09	.04	.04
6	.12	.22	.39	.47	.44	.27	.34	.34	16	.09	.03	.04
7	.12	.23	.39	.46	.44	.26	.34	.34	.50	.09	.03	.03
8	.11	.22	.38	.40	.44	.27	.34	.34	.34	.08	.03	.03
9	.10	.23	.44	.39	.42	.27	.34	.34	.29	.08	.03	.03
10	.11	.21	.44	.39	.42	.27	.34	.34	.29	.08	.03	.03
11	.10	.22	.44	.39	.40	.28	.34	.29	.29	.07	.03	.03
12	.10	.21	.48	.39	.40	.29	.34	.29	.25	.07	.04	.03
13	.10	.22	.50	.39	.41	.29	.39	.29	.22	.07	.04	.03
14	.09	.22	.49	.39	.41	.28	.34	.29	.22	.06	.04	.03
15	.10	.22	.50	.39	.40	.28	.34	.25	.19	.06	.04	.03
16	.14	.22	.48	.39	.39	.27	.34	.25	.19	.06	.04	.03
17	.15	.23	.48	.39	.39	.25	.34	.29	.19	.06	.04	.03
18	.15	.25	.50	.39	.39	.24	.34	.29	.19	.05	.05	.03
19	.15	.25	.50	.39	.39	.25	.39	.34	.16	.05	.04	.03
20	.15	.25	.50	.39	.39	.27	.34	.34	.16	.05	.04	.03
21	.15	.25	.44	.41	.39	.27	.34	.34	.16	.05	.04	.03
22	.15	.25	.50	.44	.39	.27	.34	.34	.16	.05	.04	.03
23	.17	.25	.47	.43	.39	.30	.34	.29	.16	.05	.03	.03
24	.19	.26	.79	.44	.39	.30	.34	.29	.16	.04	.03	.03
25	.19	.31	.69	.44	.39	.30	.34	.29	.16	.04	.03	.03
26	.18	.34	.61	.44	.38	.30	.34	.25	.14	.04	.03	.03
27	.16	.34	.57	.44	.32	.34	.34	.25	.14	.05	.03	.03
28	.18	.34	.56	.44	.29	.34	.34	.25	.14	.05	.03	.03
29	.19	.34	.56	.44	.29	.34	.34	.22	.12	.05	.03	.03
30	.20	.34	.50	.44	------	.34	.34	.22	.12	.05	.03	.03
31	.21	------	.47	.44	------	.29	------	.22	------	.04	.03	------
TOTAL	4.59	7.52	14.99	13.04	11.51	8.83	10.20	9.28	21.95	2.06	1.10	.92
MEAN	.15	.25	.48	.42	.40	.28	.34	.30	.73	.067	.036	.031
MAX	.21	.34	.79	.48	.44	.34	.39	.34	16	.14	.05	.04
MIN	.09	.21	.35	.39	.29	.24	.29	.22	.12	.04	.03	.03
AC-FT	9.1	15	30	26	23	18	20	18	44	4.1	2.2	1.8

CAL YR 1971 TOTAL 154.31 MEAN .42 MAX 1.0 MIN .06 AC-FT 306
WTR YR 1972 TOTAL 105.99 MEAN .29 MAX 16 MIN .03 AC-FT 210

PEAK DISCHARGE (BASE, 10 CFS).--June 6 (1815) discharge unknown (3.30 ft).

10264710 GOLER GULCH NEAR RANDSBURG, CALIF.

LOCATION.--Lat 35°23'34", long 117°47'43", in SW¼SE¼ sec.21, T.29 S., R.39 E., Kern County, on Garlock Road 500 ft east of Southern Pacific Railroad, and 8.0 miles west of Randsburg.

DRAINAGE AREA.--41.3 sq mi (including 3.03 sq mi in closed dry lake basin).

PERIOD OF RECORD.--March 1966 to September 1972 (discontinued).

GAGE.--Flood-hydrograph recorder and crest-stage gage. Altitude of gage is 2,100 ft (from topographic map).

AVERAGE DISCHARGE.--6 years, 0.019 cfs (14 acre-ft per year).

EXTREMES.--Current year: No flow during year.
Period of record: Maximum discharge, 776 cfs Feb. 25, 1969 (gage height, 6.94 ft), from rating curve based on computation of flow through culvert and road overflow; no flow most of each year.
Flood of Sept. 19, 1963, reached a stage of 7.42 ft, from floodmarks (discharge, 972 cfs, based on computation of flow through culvert and road overflow).

REMARKS.--No flow since Feb. 28, 1970. No regulation or diversion above station.

10264740 CACHE CREEK NEAR MOJAVE, CALIF.

LOCATION.--Lat 35°07'01", long 118°12'05", in NE¼NE¼SE¼ sec.27, T.32 S., R.35 E., Kern County, on left wingwall of Cache Creek bridge on State Highway 58, 4.7 miles northwest of Mojave.

DRAINAGE AREA.--96.5 sq mi.

PERIOD OF RECORD.--January 1965 to September 1972 (discontinued).

GAGE.--Flood-hydrograph recorder. Altitude of gage is 3,280 ft (from topographic map). Recording rain gage at site 12 miles upstream.

AVERAGE DISCHARGE.--7 years, 0.12 cfs (87 acre-ft per year).

EXTREMES.--Current year: Maximum discharge, 2,100 cfs June 7 (gage height, 11.8 ft, from floodmarks), by field estimate; no flow most of year.
Period of record: Maximum discharge, 2,100 cfs June 7, 1972 (gage height, 11.8 ft, from floodmarks), on basis of field estimate of maximum flow; no flow most of each year.

REMARKS.--Records poor. No regulation above station. Pumping for domestic supply by Tehachapi, Monolith, and Cache Creek Park. Precipitation, in inches, is as follows: December, 1.09.

DISCHARGE, IN CUBIC FEET PER SECOND, WATER YEAR OCTOBER 1971 TO SEPTEMBER 1972

DAY	OCT	NOV	DEC	JAN	FEB	MAR	APR	MAY	JUN	JUL	AUG	SEP
1									0			
2									0			
3									0			
4									0			
5									0			
6									0			
7									130			
8									0			
9									0			
10									0			
11									0			
12									0			
13									0			
14									0			
15									0			
16									0			
17									0			
18									0			
19									0			
20									0			
21									0			
22									0			
23									0			
24									0			
25									0			
26									0			
27									0			
28									0			
29									0			
30					------				0			
31		------			------		------		------			------
TOTAL	0	0	0	0	0	0	0	0	130	0	0	0
MEAN	0	0	0	0	0	0	0	0	4.33	0	0	0
MAX	0	0	0	0	0	0	0	0	130	0	0	0
MIN	0	0	0	0	0	0	0	0	0	0	0	0
AC-FT	0	0	0	0	0	0	0	0	258	0	0	0

CAL YR 1971 TOTAL 0.00 MEAN .000 MAX .0 MIN 0 AC-FT 0
WTR YR 1972 TOTAL 130.00 MEAN .36 MAX 130 MIN 0 AC-FT 258

10264750 PINE TREE CREEK NEAR MOJAVE, CALIF.

LOCATION.--Lat 35°13'50", long 118°05'07", in SW¼NW¼SE¼ sec.14, T.31 S., R.36 E., Kern County, on downstream side of city of Los Angeles aqueduct-siphon pier near right bank, 0.5 mile downstream from unnamed tributary, and 13 miles northeast of Mojave.

DRAINAGE AREA.--33.5 sq mi.

PERIOD OF RECORD.--July 1958 to current year.

GAGE.--Water-stage recorder with rain-gage attachment. Altitude of gage is 2,700 ft (from topographic map). Prior to Oct. 1, 1961, at datum 3.0 ft higher.

AVERAGE DISCHARGE.--14 years, 0.21 cfs (152 acre-ft per year); median of yearly mean discharges, 0.02 cfs (14 acre-ft per year).

EXTREMES.--Current year: Maximum discharge, 330 cfs June 7, on basis of field estimate of maximum flow; no flow except June 7.
Period of record: Maximum discharge, 30,000 cfs Aug. 23, 1961, on basis of field estimate of maximum flow; no flow most of each year.

REMARKS.--Records poor. No regulation or diversion above station. Rainfall data incomplete.

DISCHARGE, IN CUBIC FEET PER SECOND, WATER YEAR OCTOBER 1971 TO SEPTEMBER 1972

DAY	OCT	NOV	DEC	JAN	FEB	MAR	APR	MAY	JUN	JUL	AUG	SEP
1									0			
2									0			
3									0			
4									0			
5									0			
6									0			
7									4.5			
8									0			
9									0			
10									0			
11									0			
12									0			
13									0			
14									0			
15									0			
16									0			
17									0			
18									0			
19									0			
20									0			
21									0			
22									0			
23									0			
24									0			
25									0			
26									0			
27									0			
28									0			
29									0			
30					------				0			
31		------			------		------		------			------
TOTAL	0	0	0	0	0	0	0	0	4.5	0	0	0
MEAN	0	0	0	0	0	0	0	0	.15	0	0	0
MAX	0	0	0	0	0	0	0	0	4.5	0	0	0
MIN	0	0	0	0	0	0	0	0	0	0	0	0
AC-FT	0	0	0	0	0	0	0	0	8.9	0	0	0

CAL YR 1971 TOTAL 0.00 MEAN .0000 MAX .00 MIN 0 AC-FT .0
WTR YR 1972 TOTAL 4.50 MEAN .012 MAX 4.5 MIN 0 AC-FT 8.9

10264770 COTTONWOOD CREEK NEAR CANTIL, CALIF.

LOCATION.--Lat 35°18'50", long 118°02'38", in NE¼SE¼NW¼ sec.19, T.30 S., R.36 E., Kern County, on downstream side of city of Los Angeles aqueduct-siphon pier, 4.3 miles west of Cantil.

DRAINAGE AREA.--163 sq mi.

PERIOD OF RECORD.--March 1966 to September 1972 (discontinued).

GAGE.--Water-stage recorder and crest-stage gage. Altitude of gage is 2,400 ft (from topographic map).

AVERAGE DISCHARGE.--6 years (1967-72), 0.064 cfs (46 acre-ft per year).

EXTREMES.--Current year: Maximum discharge, 195 cfs (estimated) June 7 (gage height, 2.32 ft, from floodmark); no flow all year except June 7.
Period of record: Maximum discharge, 1,170 cfs Aug. 7, 1968 (gage height, 4.14 ft, from crest-stage gage), on basis of slope-area measurement of maximum flow; no flow most of each year.
Flood of Aug. 8, 1963, 5,150 cfs, by slope-area measurement.

REMARKS.--Records fair. No regulation or diversion above station.

DISCHARGE, IN CUBIC FEET PER SECOND, WATER YEAR OCTOBER 1971 TO SEPTEMBER 1972

DAY	OCT	NOV	DEC	JAN	FEB	MAR	APR	MAY	JUN	JUL	AUG	SEP
1									0			
2									0			
3									0			
4									0			
5									0			
6									0			
7									8.2			
8									0			
9									0			
10									0			
11									0			
12									0			
13									0			
14									0			
15									0			
16									0			
17									0			
18									0			
19									0			
20									0			
21									0			
22									0			
23									0			
24									0			
25									0			
26									0			
27									0			
28									0			
29									0			
30					------				0			
31		------			------		------		------			------
TOTAL	0	0	0	0	0	0	0	0	8.2	0	0	0
MEAN	0	0	0	0	0	0	0	0	.27	0	0	0
MAX	0	0	0	0	0	0	0	0	8.2	0	0	0
MIN	0	0	0	0	0	0	0	0	0	0	0	0
AC-FT	0	0	0	0	0	0	0	0	16	0	0	0

CAL YR 1971 TOTAL 0.00 MEAN .0000 MAX .00 MIN 0 AC-FT .0
WTR YR 1972 TOTAL 8.20 MEAN .022 MAX 8.2 MIN 0 AC-FT 16

10265200 CONVICT CREEK NEAR MAMMOTH LAKES, CALIF.

LOCATION.--Lat 37°36'26", long 118°50'52", in NE¼NE¼ sec.14, T.4 S., R.28 E., Mono County, on right bank 1.1 miles downstream from Convict Lake, 2.0 miles upstream from U.S. Highway 395, and 7.0 miles southeast of Mammoth Lakes (Ranger Station).

DRAINAGE AREA.--18.2 sq mi.

PERIOD OF RECORD.--July 1925 to current year. Prior to October 1959 monthly discharge only, published in WSP 1314 and 1734.

GAGE.--Water-stage recorder and wood control. Altitude of gage is 7,450 ft (from topographic map). Prior to Nov. 15, 1926, nonrecording gage at same site and datum.

AVERAGE DISCHARGE.--47 years, 24.3 cfs (17,610 acre-ft per year).

EXTREMES.--Current year: Maximum discharge, 65 cfs June 9 (gage height, 2.05 ft); minimum daily, 7.0 cfs Mar. 1-6.
Period of record: Maximum discharge, 290 cfs June 29, 1932 (gage height, 4.43 ft); minimum daily, 1.3 cfs Jan. 10, 1951.

REMARKS.--Some regulation by Convict Lake above station. No diversion above station.

COOPERATION.--Records furnished by city of Los Angeles, Department of Water and Power and reviewed by Geological Survey.

DISCHARGE, IN CUBIC FEET PER SECOND, WATER YEAR OCTOBER 1971 TO SEPTEMBER 1972

DAY	OCT	NOV	DEC	JAN	FEB	MAR	APR	MAY	JUN	JUL	AUG	SEP
1	14	8.0	10	14	9.0	7.0	9.4	10	58	48	22	15
2	14	9.0	10	14	9.0	7.0	9.4	11	60	48	22	15
3	14	9.0	10	13	9.0	7.0	9.4	12	61	48	22	15
4	14	9.0	10	13	9.0	7.0	9.4	14	62	48	22	15
5	14	9.0	10	13	9.0	7.0	10	14	63	47	22	22
6	14	9.0	10	12	9.0	7.0	12	16	63	45	21	33
7	14	9.0	10	12	9.0	8.0	11	16	64	43	21	36
8	14	9.0	10	12	9.0	8.0	11	16	64	42	21	36
9	14	9.0	10	12	9.0	8.0	10	18	65	40	21	36
10	14	9.0	10	11	9.0	8.0	10	18	64	36	20	33
11	14	10	10	11	9.0	8.0	11	18	63	35	20	31
12	14	14	10	11	9.0	8.0	11	18	61	34	19	29
13	14	13	10	11	9.0	9.0	11	19	61	34	19	27
14	13	11	10	11	9.0	9.0	10	19	60	33	19	26
15	13	11	10	11	9.0	9.0	10	20	60	33	17	25
16	12	11	10	10	9.0	9.0	10	22	60	33	17	23
17	11	12	10	10	9.0	9.0	10	26	60	33	17	22
18	11	12	10	10	9.0	9.0	10	29	60	33	17	20
19	11	12	10	10	9.0	9.0	10	33	60	32	17	19
20	11	12	10	10	9.0	9.0	10	34	60	31	17	18
21	11	12	10	10	9.0	9.0	10	33	60	29	16	18
22	11	12	13	10	9.0	10	9.9	31	59	28	16	18
23	11	12	13	10	9.0	10	9.9	31	58	28	16	17
24	11	12	13	10	9.0	10	10	29	56	26	16	16
25	11	11	13	9.0	8.0	10	9.4	30	55	22	15	16
26	11	11	13	9.0	8.0	10	9.4	31	53	23	15	15
27	9.0	10	14	9.0	8.0	10	9.9	34	50	23	15	15
28	8.0	12	13	9.0	8.0	10	9.9	37	49	22	15	15
29	8.0	10	13	9.0	8.0	10	9.9	40	48	22	15	15
30	8.0	10	13	9.0	------	10	9.9	45	48	22	15	15
31	8.0	------	13	9.0	------	10	------	50	------	22	15	------
TOTAL	371.0	319.0	341	334.0	256.0	271.0	302.8	774	1,765	1,043	562	656
MEAN	12.0	10.6	11.0	10.8	8.83	8.74	10.1	25.0	58.8	33.6	18.1	21.9
MAX	14	14	14	14	9.0	10	12	50	65	48	22	36
MIN	8.0	8.0	10	9.0	8.0	7.0	9.4	10	48	22	15	15
AC-FT	736	633	676	662	508	538	601	1,540	3,500	2,070	1,110	1,300

CAL YR 1971 TOTAL 8,426.3 MEAN 23.1 MAX 89 MIN 7.2 AC-FT 16,710
WTR YR 1972 TOTAL 6,994.8 MEAN 19.1 MAX 65 MIN 7.0 AC-FT 13,870

10265700 ROCK CREEK AT LITTLE ROUND VALLEY, NEAR BISHOP, CALIF.

LOCATION.--Lat 37°33'15", long 118°41'03", in SE¼SE¼ sec.32, T.4 S., R.30 E., Mono County, on right bank just upstream from diversion to Little Round Valley, 0.6 mile south of Toms Place, and 20 miles northwest of Bishop.

DRAINAGE AREA.--35.8 sq mi.

PERIOD OF RECORD.--January to December 1918, January 1920 to current year. Prior to October 1959 monthly discharge only, published in WSP 1314 and 1734.

GAGE.--Water-stage recorder. Parshall flume since May 1953. Altitude of gage is 7,280 ft (from topographic map). See WSP 1734 for history of changes prior to May 28, 1953.

AVERAGE DISCHARGE.--52 years (1920-72), 29.7 cfs (21,520 acre-ft per year).

EXTREMES.--Current year: Maximum discharge, 66 cfs June 8 (gage height, 1.88 ft); minimum daily, 2.2 cfs Nov. 30.
1926 to current year: Maximum discharge, 312 cfs May 30, 1969 (gage height, 5.00 ft); minimum daily, 2.2 cfs Nov. 30, 1971.

REMARKS.--No regulation or diversion above station.

COOPERATION.--Records furnished by city of Los Angeles, Department of Water and Power and reviewed by Geological Survey.

DISCHARGE, IN CUBIC FEET PER SECOND, WATER YEAR OCTOBER 1971 TO SEPTEMBER 1972

DAY	OCT	NOV	DEC	JAN	FEB	MAR	APR	MAY	JUN	JUL	AUG	SEP
1	9.8	9.2	3.2	10	10	13	12	17	61	45	18	13
2	9.8	9.0	3.7	10	10	13	12	17	62	44	18	12
3	9.8	9.0	4.7	11	11	12	12	17	63	44	18	12
4	9.8	9.0	5.8	11	10	12	11	17	62	44	19	13
5	9.8	8.7	6.2	11	10	12	11	20	59	42	18	27
6	9.5	8.5	7.0	11	9.8	12	10	21	56	38	18	41
7	9.2	8.7	7.0	11	9.2	11	10	21	60	34	17	50
8	9.0	8.5	6.5	11	9.5	11	11	21	65	31	15	42
9	9.0	8.7	6.5	11	10	11	11	21	61	28	14	33
10	8.7	8.7	6.0	11	11	11	11	21	52	27	14	32
11	8.5	11	6.0	11	11	11	11	21	50	27	14	31
12	8.2	11	5.6	11	11	11	11	21	45	26	14	27
13	8.2	10	5.6	11	11	10	11	22	44	26	14	24
14	7.7	12	5.6	11	11	11	10	24	45	27	13	21
15	7.7	11	5.6	11	11	11	11	26	50	27	13	19
16	7.4	9.8	5.6	11	11	10	11	28	51	27	13	17
17	6.7	8.0	5.8	11	11	10	11	30	53	28	12	16
18	7.0	7.2	5.8	11	11	10	11	30	53	28	12	15
19	7.0	10	5.6	11	11	10	14	30	53	27	12	14
20	7.0	11	5.6	11	11	9.2	16	28	52	27	11	13
21	6.7	10	5.6	11	11	9.2	16	26	52	25	11	13
22	6.7	9.8	6.2	11	11	9.5	16	24	52	23	10	12
23	6.7	8.5	6.5	11	11	11	16	22	52	20	10	11
24	7.2	7.2	7.2	11	11	11	16	22	49	19	11	11
25	7.4	6.2	6.5	11	12	11	16	22	45	17	11	11
26	7.4	5.1	8.0	10	11	12	14	24	41	16	11	11
27	8.2	4.3	8.0	10	10	12	14	26	39	15	11	11
28	9.0	3.5	9.0	10	11	11	14	31	39	14	11	10
29	9.8	2.8	7.7	10	11	12	15	37	40	15	11	10
30	10	2.2	7.0	9.5	------	13	15	50	42	16	12	11
31	9.8	------	6.2	9.2	------	13	------	56	------	17	13	------
TOTAL	258.7	248.6	191.3	331.7	309.5	345.9	380	793	1,548	844	419	583
MEAN	8.35	8.29	6.17	10.7	10.7	11.2	12.7	25.6	51.6	27.2	13.5	19.4
MAX	10	12	9.0	11	12	13	16	56	65	45	19	50
MIN	6.7	2.2	3.2	9.2	9.2	9.2	10	17	39	14	10	10
AC-FT	513	493	379	658	614	686	754	1,570	3,070	1,670	831	1,160

CAL YR 1971 TOTAL 7,556.8 MEAN 20.7 MAX 83 MIN 2.2 AC-FT 14,990
WTR YR 1972 TOTAL 6,252.7 MEAN 17.1 MAX 65 MIN 2.2 AC-FT 12,400

10267000 PINE CREEK AT DIVISION BOX, NEAR BISHOP, CALIF.

LOCATION.--Lat 37°24'59", long 118°37'15", in SE¼NW¼ sec.19, T.6 S., R.31 E., Inyo County, on right bank 0.2 mile upstream from division box (at Rovana), 1.9 miles west of Round Valley schoolhouse, and 13 miles northwest of Bishop.

DRAINAGE AREA.--36.4 sq mi.

PERIOD OF RECORD.--October 1921 to current year. Prior to October 1959 monthly discharge only, published in WSP 1314 and 1734.

GAGE.--Water-stage recorder. Parshall flume since November 1938. Altitude of gage is 5,280 ft (from topographic map).

AVERAGE DISCHARGE.--51 years, 45.0 cfs (32,600 acre-ft per year).

EXTREMES.--Current year: Maximum discharge, 269 cfs Sept. 5 (gage height, 4.55 ft); minimum daily, 22 cfs Dec. 9, 10.
Period of record: Maximum discharge, 509 cfs July 2, 1967 (gage height, 6.05 ft); minimum daily, 10 cfs Jan. 8, 1930, Jan. 21, 1935.

REMARKS.--No regulation or diversion above station.

COOPERATION.--Records furnished by city of Los Angeles, Department of Water and Power and reviewed by Geological Survey.

DISCHARGE, IN CUBIC FEET PER SECOND, WATER YEAR OCTOBER 1971 TO SEPTEMBER 1972

DAY	OCT	NOV	DEC	JAN	FEB	MAR	APR	MAY	JUN	JUL	AUG	SEP
1	26	25	24	26	23	23	26	35	142	83	35	27
2	26	25	24	26	23	23	26	39	137	83	33	27
3	26	25	24	25	23	23	26	44	137	80	33	26
4	26	25	24	25	23	23	25	49	133	77	32	27
5	25	25	24	24	23	23	25	45	130	71	31	113
6	25	25	24	24	23	23	25	44	133	64	30	127
7	25	25	23	24	23	23	24	42	151	58	29	80
8	25	25	23	24	23	23	24	41	137	54	29	65
9	25	25	22	24	23	24	24	42	121	51	29	57
10	25	25	22	24	23	24	25	42	108	50	29	52
11	25	26	23	24	23	24	25	44	95	50	30	46
12	25	26	23	24	23	24	25	49	98	50	29	42
13	25	25	23	24	23	24	25	58	101	49	28	38
14	25	25	23	24	23	24	25	66	110	47	28	35
15	25	25	23	24	23	24	25	68	118	47	28	33
16	26	25	23	24	23	25	25	76	123	47	28	31
17	26	24	24	24	23	26	25	74	120	48	27	30
18	26	24	24	24	23	27	25	68	117	46	27	28
19	25	24	24	25	23	28	25	62	116	44	27	28
20	25	24	24	24	23	29	25	53	114	42	26	27
21	25	24	24	24	24	29	25	47	108	40	26	26
22	26	25	26	24	24	29	24	44	101	38	26	25
23	26	25	25	24	23	29	25	47	93	36	25	25
24	26	24	25	24	23	28	25	56	84	35	25	24
25	26	24	26	23	23	27	25	68	80	34	25	24
26	25	24	25	23	23	27	25	83	79	33	25	24
27	25	25	25	23	23	27	26	96	80	33	25	25
28	25	25	24	23	23	26	28	102	80	32	25	25
29	25	26	26	23	23	26	31	120	81	32	25	25
30	25	26	25	23	------	25	33	141	84	33	25	25
31	25	------	26	23	------	26	------	148	------	34	26	------
TOTAL	786	746	745	744	669	786	767	1,993	3,311	1,521	866	1,187
MEAN	25.4	24.9	24.0	24.0	23.1	25.4	25.6	64.3	110	49.1	27.9	39.6
MAX	26	26	26	26	24	29	33	148	151	83	35	127
MIN	25	24	22	23	23	23	24	35	79	32	25	24
AC-FT	1,560	1,480	1,480	1,480	1,330	1,560	1,520	3,950	6,570	3,020	1,720	2,350

CAL YR 1971 TOTAL 15,878 MEAN 43.5 MAX 183 MIN 22 AC-FT 31,490
WTR YR 1972 TOTAL 14,121 MEAN 38.6 MAX 151 MIN 22 AC-FT 28,010

10268700 SILVER CANYON CREEK NEAR LAWS, CALIF.

LOCATION.--Lat 37°24'16", long 118°18'30", in NW¼ sec.25, T.6 S., R.33 E., Inyo County, on right bank at mouth of canyon, 2.0 miles east of Laws.

DRAINAGE AREA.--21.6 sq mi.

PERIOD OF RECORD.--March 1930 to current year. Prior to October 1959 monthly discharge only, published in WSP 1314 and 1734.

GAGE.--Water-stage recorder and Parshall flume (Cipolletti weir used during low flow). Altitude of gage is 4,600 ft (from topographic map). See WSP 1734 for history of changes prior to Feb. 24, 1943.

AVERAGE DISCHARGE.--42 years, 1.63 cfs (1,180 acre-ft per year).

EXTREMES.--Current year: Maximum discharge, 2.1 cfs Dec. 22 (gage height, 0.65 ft); minimum daily, 1.0 cfs for many days.
Period of record: Maximum discharge, 9.6 cfs June 16, 1969 (gage height, 1.65 ft); no flow at times in some years.

REMARKS.--No regulation; occasional diversion above station.

COOPERATION.--Records furnished by city of Los Angeles, Department of Water and Power and reviewed by Geological Survey.

DISCHARGE, IN CUBIC FEET PER SECOND, WATER YEAR OCTOBER 1971 TO SEPTEMBER 1972

DAY	OCT	NOV	DEC	JAN	FEB	MAR	APR	MAY	JUN	JUL	AUG	SEP
1	1.8	1.8	1.9	1.9	2.0	1.8	1.6	1.5	1.2	1.1	1.0	1.0
2	1.8	1.8	1.9	1.9	2.0	1.8	1.6	1.4	1.2	1.1	1.0	1.0
3	1.8	1.8	1.9	1.9	2.0	1.8	1.6	1.4	1.2	1.1	1.0	1.0
4	1.8	1.8	1.9	1.9	2.0	1.8	1.6	1.5	1.2	1.1	1.0	1.0
5	1.8	1.8	1.9	1.9	2.0	1.8	1.6	1.4	1.2	1.1	1.0	1.1
6	1.8	1.8	1.9	1.9	2.0	1.8	1.6	1.5	1.2	1.1	1.0	1.0
7	1.8	1.8	2.0	1.9	1.9	1.8	1.6	1.4	1.2	1.1	1.0	1.0
8	1.8	1.8	2.0	1.9	1.9	1.8	1.6	1.4	1.2	1.1	1.0	1.1
9	1.8	1.9	2.0	2.0	2.0	1.8	1.6	1.4	1.2	1.1	1.0	1.1
10	1.8	1.9	2.0	2.0	2.0	1.8	1.6	1.4	1.2	1.1	1.0	1.1
11	1.8	2.0	2.0	1.9	1.9	1.8	1.6	1.4	1.2	1.1	1.0	1.1
12	1.8	2.0	2.0	1.9	1.8	1.8	1.7	1.4	1.1	1.0	1.0	1.1
13	1.8	1.9	2.0	1.9	1.8	1.7	1.6	1.4	1.1	1.0	1.0	1.1
14	1.8	1.9	2.0	1.9	1.8	1.5	1.6	1.4	1.1	1.0	1.0	1.1
15	1.8	1.9	2.0	1.9	1.8	1.5	1.6	1.4	1.1	1.0	1.0	1.1
16	1.8	1.9	2.0	1.9	1.8	1.5	1.6	1.4	1.1	1.1	1.0	1.1
17	1.8	1.9	2.0	1.9	1.8	1.5	1.6	1.4	1.1	1.0	1.0	1.1
18	1.8	1.9	2.0	1.9	1.8	1.4	1.6	1.4	1.1	1.0	1.0	1.1
19	1.8	2.0	2.0	1.9	1.8	1.4	1.7	1.4	1.1	1.0	1.0	1.1
20	1.8	1.9	2.0	1.9	1.8	1.4	1.6	1.4	1.1	1.0	1.0	1.1
21	1.8	1.9	2.0	1.9	1.8	1.5	1.6	1.3	1.1	1.1	1.0	1.2
22	1.8	1.9	2.1	1.9	1.8	1.6	1.6	1.3	1.1	1.1	1.0	1.2
23	1.8	1.9	2.0	1.9	1.8	1.6	1.6	1.3	1.1	1.0	1.0	1.2
24	1.8	1.9	2.0	1.9	1.8	1.6	1.6	1.3	1.1	1.0	1.0	1.2
25	1.8	1.9	1.9	1.9	1.8	1.6	1.6	1.2	1.1	1.0	1.0	1.2
26	1.8	1.9	1.9	1.9	1.8	1.6	1.5	1.2	1.1	1.0	1.0	1.2
27	1.8	1.9	1.9	1.9	1.8	1.6	1.5	1.2	1.1	1.0	1.1	1.2
28	1.8	1.9	1.9	1.9	1.8	1.6	1.5	1.2	1.1	1.0	1.1	1.2
29	1.8	1.9	1.9	1.9	1.8	1.6	1.5	1.2	1.1	1.0	1.0	1.2
30	1.8	1.9	1.9	1.9	------	1.6	1.5	1.2	1.1	1.0	1.0	1.2
31	1.8	------	1.9	1.9	------	1.6	------	1.2	------	1.0	1.0	------
TOTAL	55.8	56.5	60.8	59.1	54.1	51.0	47.7	41.9	34.1	32.4	31.2	33.4
MEAN	1.80	1.88	1.96	1.91	1.87	1.65	1.59	1.35	1.14	1.05	1.01	1.11
MAX	1.8	2.0	2.1	2.0	2.0	1.8	1.7	1.5	1.2	1.1	1.1	1.2
MIN	1.8	1.8	1.9	1.9	1.8	1.4	1.5	1.2	1.1	1.0	1.0	1.0
AC-FT	111	112	121	117	107	101	95	83	68	64	62	66

CAL YR 1971 TOTAL 671.0 MEAN 1.84 MAX 2.4 MIN 1.4 AC-FT 1,330
WTR YR 1972 TOTAL 558.0 MEAN 1.52 MAX 2.1 MIN 1.0 AC-FT 1,110

10271210 BISHOP CREEK BELOW POWERPLANT NO. 6, NEAR BISHOP, CALIF.

LOCATION.--Lat 37°20'59", long 118°27'41", in SE¼SE¼ sec.9, T.7 S., R.32 E., Inyo County, below powerplant No. 6 tailrace, and 3.6 miles west of Bishop.

DRAINAGE AREA.--104 sq mi (Natural flow).

PERIOD OF RECORD.--October 1936 to current year. Monthly and yearly mean discharges prior to October 1969, published in WRD Calif. 1971.

GAGE.--None.

AVERAGE DISCHARGE (Actual flow).--37 years, 98.1 cfs (71,070 acre-ft per year).
(Natural flow).--37 years, 106 cfs (76,800 acre-ft per year).

EXTREMES (Actual flow).--Current year: Maximum daily discharge, 137 cfs July 4; minimum daily, 46 cfs Apr. 30.
Period of record (1970 to current year): Maximum daily discharge, 232 cfs July 21, 1971: minimum daily, 46 cfs Apr. 30, 1972.

REMARKS.--Flow regulated for power development by South Lake, Lake Sabrina, and Intake No. 2 Reservoir (combined capacity, 20,660 acre-ft) and many powerhouses. Records for "actual flow" include Bishop Creek above powerplant No. 6 tailrace and Bishop Creek powerplant No. 6 conduit. Records for "natural flow" include "actual flow" of Bishop Creek below powerplant No. 6, Abelour ditch near Bishop, minus Birch-McGee diversion to Bishop Creek powerplant near Bishop, and the change in contents and evaporation for South Lake, Lake Sabrina, and Intake No. 2 Reservoir.

COOPERATION.--Records furnished by Southern California Edison Co. and reviewed by Geological Survey, connection with a Federal Power Commission project.

DISCHARGE, IN CUBIC FEET PER SECOND, WATER YEAR OCTOBER 1971 TO SEPTEMBER 1972

DAY	OCT	NOV	DEC	JAN	FEB	MAR	APR	MAY	JUN	JUL	AUG	SEP
1	89	52	71	98	71	71	50	56	84	120	98	76
2	91	47	73	74	74	71	50	66	90	130	99	69
3	89	48	74	74	72	70	50	67	100	136	99	67
4	91	48	72	75	71	71	50	65	96	137	100	67
5	93	53	70	75	70	72	50	67	95	134	100	86
6	91	51	73	72	71	71	52	67	87	127	102	90
7	90	51	71	73	72	71	52	68	101	120	100	87
8	90	51	71	73	71	70	50	68	109	113	101	87
9	90	51	77	74	70	70	51	67	91	96	102	86
10	90	52	75	76	71	71	53	69	87	95	98	77
11	89	52	74	72	71	73	56	70	85	89	99	68
12	90	52	73	70	70	73	58	70	80	88	101	70
13	91	54	72	71	70	73	58	70	78	91	101	70
14	91	54	73	73	70	74	58	70	77	90	100	67
15	90	62	72	72	70	73	58	69	79	92	100	67
16	92	70	72	71	72	71	58	69	80	95	98	67
17	92	74	72	74	71	72	58	69	83	126	100	66
18	92	75	98	74	70	73	58	69	85	98	101	65
19	92	75	116	72	70	73	58	68	100	100	99	65
20	94	76	117	72	71	72	58	70	120	101	99	66
21	94	74	116	71	70	73	54	70	90	101	100	65
22	93	74	122	71	72	74	50	68	60	100	100	66
23	93	75	121	72	70	73	49	68	104	102	100	64
24	93	75	121	71	71	53	48	69	123	103	103	66
25	91	74	123	71	70	51	49	69	119	102	102	66
26	69	72	119	70	71	51	48	69	120	104	99	67
27	66	73	121	71	71	51	48	68	119	103	100	67
28	54	74	120	71	71	51	49	70	112	103	101	68
29	54	74	122	71	71	50	48	71	93	103	102	66
30	54	73	121	72	------	50	46	77	94	103	102	68
31	55	------	121	72	------	49	------	81	------	100	102	------
TOTAL	2,633	1,886	2,893	2,268	2,055	2,061	1,575	2,134	2,841	3,302	3,108	2,126
MEAN	84.9	62.9	93.3	73.2	70.9	66.5	52.5	68.8	94.7	107	100	70.9
MAX	94	76	123	98	74	74	58	81	123	137	103	90
MIN	54	47	70	70	70	49	46	56	60	88	98	64
AC-FT	5,220	3,740	5,740	4,500	4,080	4,090	3,120	4,230	5,640	6,550	6,160	4,220
(a)	2,330	2,260	2,740	2,380	2,000	2,840	2,710	6,260	12,180	6,540	3,660	4,790

CAL YR 1971 TOTAL 32,050 MEAN 87.8 MAX 232 MIN 47 AC-FT 63,570 a 105,800
WTR YR 1972 TOTAL 28,882 MEAN 78.9 MAX 137 MIN 46 AC-FT 57,290 a 50,690

a Computed natural flow, in acre-feet.

10276000 BIG PINE CREEK NEAR BIG PINE, CALIF.

LOCATION.--Lat 37°08'42", long 118°18'52", in SW¼SW¼SE¼ sec.24, T.9 S., R.33 E., Inyo County, on left bank 0.3 mile downstream from Little Pine Creek, 0.5 mile downstream from powerhouse No. 3, and 2.2 miles southwest of Big Pine.

DRAINAGE AREA.--39.0 sq mi.

PERIOD OF RECORD.--November 1907 to February 1911, January 1920 to current year; combined records of creek and diversions, June 1930 to current year. Monthly discharge only for some periods, published in WSP 1314 and 1734.

GAGE.--Water-stage recorder and Parshall flume since April 1949 on creek; water-stage recorder and Parshall flume on each diversion. Altitude of gage is 4,500 ft (from topographic map). Prior to January 1923, nonrecording gage at same site and datum.

AVERAGE COMBINED DISCHARGE.--42 years (1930-72), 41.0 cfs (29,700 acre-ft per year).

EXTREMES (Creek only).--Current year: Maximum discharge, 248 cfs Sept. 5 (gage height, 4.33 ft); minimum daily, 6.7 cfs Sept. 27, 28.
Period of record: Maximum discharge, 458 cfs July 3, 1932 (gage height, 6.55 ft); no flow Dec. 3-12, 1935.
(Combined flow).--Current year: Maximum discharge, 262 cfs Sept. 5; minimum daily, 11 cfs Feb. 23.
Period of record: Maximum discharge, 458 cfs July 3, 1932; minimum daily, 6.4 cfs Dec. 11, 12, 1935.

REMARKS.--No regulation above station. Diversions above station for power and irrigation. At times since 1962 discharge from Little Pine Creek has been spread in nearby meadows and does not reach gage as surface flow. For records of combined discharge of Big Pine Creek and Giroux ditches which divert above station, see following page.

COOPERATION.--Records furnished by city of Los Angeles, Department of Water and Power and reviewed by Geological Survey.

DISCHARGE, IN CUBIC FEET PER SECOND, WATER YEAR OCTOBER 1971 TO SEPTEMBER 1972

DAY	OCT	NOV	DEC	JAN	FEB	MAR	APR	MAY	JUN	JUL	AUG	SEP
1	11	11	9.8	10	9.0	9.0	13	14	49	92	68	29
2	14	11	10	10	9.0	9.5	13	14	53	93	63	28
3	14	11	10	9.2	8.7	9.8	13	14	52	96	54	26
4	13	11	10	9.2	8.7	10	13	16	49	94	51	28
5	13	11	10	9.8	8.7	10	14	13	50	77	49	124
6	13	11	10	9.5	8.5	10	14	14	47	65	49	156
7	13	11	8.5	9.2	8.5	10	13	15	54	58	52	74
8	13	11	10	9.0	8.5	10	13	14	51	52	51	51
9	13	11	9.8	9.2	8.5	10	13	15	48	48	49	40
10	13	11	9.5	9.2	8.5	10	12	14	42	52	48	33
11	13	11	9.2	9.2	8.5	10	13	14	42	57	46	26
12	13	12	9.5	9.8	8.5	10	13	15	49	59	45	20
13	12	11	9.5	9.2	8.5	10	12	18	54	60	44	17
14	12	10	10	9.2	8.5	10	11	21	71	62	42	15
15	12	10	9.5	9.2	8.5	10	11	23	91	61	38	14
16	12	11	11	9.2	8.5	10	12	25	100	68	32	12
17	13	11	9.8	9.2	8.5	11	11	21	100	77	31	11
18	13	11	9.2	9.2	8.5	11	11	20	98	69	31	11
19	12	11	9.2	9.2	8.5	11	11	17	92	66	29	8.5
20	12	11	9.2	9.2	8.5	11	11	14	96	56	28	9.0
21	12	11	9.5	9.0	8.2	11	11	12	88	44	28	9.0
22	12	11	11	9.0	8.2	11	11	11	92	39	27	8.2
23	12	11	11	8.7	8.2	10	11	11	70	40	27	8.0
24	12	11	11	8.2	8.5	10	11	15	58	49	28	7.7
25	12	11	12	8.7	8.7	10	11	20	56	53	27	7.4
26	12	11	12	8.5	8.7	10	11	25	58	42	27	7.0
27	11	10	12	8.7	8.7	9.8	12	29	63	38	26	6.7
28	9.8	10	11	8.7	9.0	9.2	13	31	71	40	27	6.7
29	11	10	11	8.7	8.7	9.2	13	32	80	44	27	7.7
30	12	10	11	9.0	------	9.5	14	43	87	54	27	7.7
31	11	------	10	9.0	------	13	------	50	------	63	23	------
TOTAL	380.8	325	315.2	283.1	248.5	315.0	365	610	2,011	1,868	1,194	808.6
MEAN	12.3	10.8	10.2	9.13	8.57	10.2	12.2	19.7	67.0	60.3	38.5	27.0
MAX	14	12	12	10	9.0	13	14	50	100	96	68	156
MIN	9.8	10	8.5	8.2	8.2	9.0	11	11	42	38	23	6.7
AC-FT	755	645	625	562	493	625	724	1,210	3,990	3,710	2,370	1,600

CAL YR 1971 TOTAL 9,463.0 MEAN 25.9 MAX 122 MIN 8.0 AC-FT 18,770
WTR YR 1972 TOTAL 8,724.2 MEAN 23.8 MAX 156 MIN 6.7 AC-FT 17,300

10276000 BIG PINE CREEK NEAR BIG PINE, CALIF.--Continued

COMBINED DISCHARGE, IN CUBIC FEET PER SECOND, OF BIG PINE CREEK AND UPPER AND LOWER GIROUX DITCHES, NEAR BIG PINE, CALIF., WATER YEAR OCTOBER 1971 TO SEPTEMBER 1972

DAY	OCT	NOV	DEC	JAN	FEB	MAR	APR	MAY	JUN	JUL	AUG	SEP
1	18	15	14	14	13	12	17	19	65	106	82	43
2	18	15	14	14	13	13	17	21	67	107	77	41
3	18	15	14	13	12	13	17	23	66	110	68	39
4	17	15	14	13	12	13	17	25	63	108	65	42
5	17	15	14	14	12	13	18	22	64	91	63	138
6	17	15	14	13	12	13	17	23	61	79	63	170
7	17	15	12	13	12	14	16	24	68	72	66	88
8	17	15	14	13	12	14	16	23	65	66	65	65
9	17	15	14	13	12	14	17	24	62	62	63	54
10	17	15	13	13	12	14	17	23	56	66	62	47
11	17	15	13	13	12	14	18	24	56	71	60	39
12	16	16	13	14	12	14	18	25	63	73	59	33
13	16	15	13	13	12	14	17	29	68	74	58	29
14	16	14	14	13	12	14	16	32	85	76	56	27
15	15	14	13	13	12	14	16	34	105	75	52	26
16	16	15	15	13	12	14	17	37	114	82	46	24
17	16	15	14	13	12	15	16	33	114	91	45	23
18	16	15	13	13	12	15	16	32	112	83	45	22
19	16	15	13	13	12	15	16	29	106	80	42	20
20	16	15	13	13	12	15	16	26	110	70	41	20
21	16	15	13	13	12	15	16	23	102	58	41	20
22	16	15	15	13	12	15	16	22	106	53	40	19
23	16	15	15	12	11	14	16	22	84	54	40	19
24	16	15	15	12	12	14	16	27	72	63	41	19
25	16	15	16	13	12	14	16	32	70	67	40	18
26	16	15	16	12	12	14	16	38	72	56	40	18
27	15	14	16	12	12	13	17	42	77	52	39	18
28	13	14	15	12	12	13	18	44	85	54	40	18
29	15	14	15	13	12	13	18	45	94	58	40	19
30	16	14	15	13	------	13	19	51	101	58	40	19
31	15	------	14	13	------	17	------	60	------	77	36	------
TOTAL	503	445	436	402	349	432	503	934	2,433	2,292	1,615	1,177
MEAN	16.2	14.8	14.1	13.0	12.0	13.9	16.8	30.1	81.1	73.9	52.1	39.2
MAX	18	16	16	14	13	17	19	60	114	110	82	170
MIN	13	14	12	12	11	12	16	19	56	52	36	18
AC-FT	998	883	865	797	692	857	998	1,850	4,830	4,550	3,200	2,330

CAL YR 1971 TOTAL 12,126 MEAN 33.2 MAX 136 MIN 12 AC-FT 24,050
WTR YR 1972 TOTAL 11,521 MEAN 31.5 MAX 170 MIN 11 AC-FT 22,850

10277500 OWENS RIVER NEAR BIG PINE, CALIF.

LOCATION.--Lat 37°00'55", long 118°13'25", in NW¼SE¼ sec.2, T.11 S., R.34 E., Inyo County, on left bank 0.1 mile downstream from Little Seeley Spring, 0.2 mile downstream from Charlies Butte, and 10.8 miles southeast of Big Pine.

DRAINAGE AREA.--1,977 sq mi.

PERIOD OF RECORD.--January 1906 to current year. Monthly discharge only for some periods, published in WSP 1314. Prior to 1912 published as "near Tinemaha".

GAGE.--Water-stage recorder. Rock control since October 1958. Altitude of gage is 3,800 ft (from topographic map). Prior to Oct. 8, 1922, nonrecording gage at same site and datum.

EXTREMES.--Current year: Maximum daily discharge, 757 cfs Oct. 15; minimum daily, 3.0 cfs Oct. 1-3.
Period of record: Maximum discharge, 3,220 cfs (estimated) Jan. 26, 1914 (gage height, 11.2 ft), from rating curve extended above 1,100 cfs; no flow Jan. 9-13, 21-26, 1937.

REMARKS.--Flow regulated since 1941 by Lake Crowley (capacity, 183,500 acre-ft) and several small reservoirs (combined capacity, 41,400 acre-ft). Diversions from both main stream and tributaries. Water imported from Mono Lake basin since 1941 for diversion to Los Angeles aqueduct which diverts 4 miles downstream.

COOPERATION.--Records furnished by city of Los Angeles, Department of Water and Power and reviewed by Geological Survey.

DISCHARGE, IN CUBIC FEET PER SECOND, WATER YEAR OCTOBER 1971 TO SEPTEMBER 1972

DAY	OCT	NOV	DEC	JAN	FEB	MAR	APR	MAY	JUN	JUL	AUG	SEP
1	3.0	726	540	349	349	379	582	530	534	551	688	657
2	3.0	723	540	351	349	374	580	525	537	552	661	657
3	3.0	724	540	345	374	378	580	527	538	552	660	657
4	365	723	540	351	418	379	578	528	541	551	659	658
5	448	721	540	351	417	371	581	528	544	553	657	658
6	650	721	520	350	419	374	574	528	547	552	657	658
7	660	724	520	350	421	458	548	528	549	553	658	658
8	676	724	500	350	421	505	529	509	551	553	659	658
9	728	724	320	350	421	506	535	486	549	550	658	657
10	730	724	320	350	421	532	530	483	547	550	658	657
11	731	724	320	350	421	545	530	479	547	550	658	657
12	732	724	320	350	421	542	541	480	547	550	657	656
13	740	724	320	350	421	552	570	480	553	551	657	656
14	754	721	330	350	419	551	599	480	554	574	658	656
15	757	720	369	350	421	554	603	480	554	611	657	655
16	754	703	367	350	422	555	599	484	553	610	658	655
17	754	664	365	352	421	555	597	483	553	611	657	656
18	752	661	365	352	421	555	595	509	555	665	657	656
19	748	661	365	352	419	557	595	542	554	697	657	657
20	752	661	365	352	421	560	593	542	553	698	656	655
21	746	660	367	352	422	557	593	543	553	695	656	654
22	730	660	365	352	412	554	591	544	553	697	657	653
23	725	658	365	352	404	562	591	543	553	696	656	654
24	715	660	365	351	406	580	591	542	552	697	657	654
25	702	658	371	351	406	582	589	540	549	696	655	630
26	698	650	371	351	393	584	590	540	553	698	655	607
27	695	650	361	351	391	584	591	540	552	697	655	605
28	692	650	363	350	385	585	585	540	552	696	656	528
29	689	650	365	349	381	585	543	540	552	695	657	388
30	685	650	365	349	------	582	531	538	552	696	657	380
31	682	------	361	349	------	584	------	534	------	696	658	------
TOTAL	19,499.0	20,743	12,385	10,862	11,817	16,121	17,234	16,075	16,481	19,293	20,406	18,887
MEAN	629	691	400	350	407	520	574	519	549	622	658	630
MAX	757	726	540	352	422	585	603	544	555	698	688	658
MIN	3.0	650	320	345	349	371	529	479	534	550	655	380
AC-FT	38,680	41,140	24,570	21,540	23,440	31,980	34,180	31,880	32,690	38,270	40,480	37,460

CAL YR 1971 TOTAL 188,630.0 MEAN 517 MAX 758 MIN 2.0 AC-FT 374,100
WTR YR 1972 TOTAL 199,803.0 MEAN 546 MAX 757 MIN 3.0 AC-FT 396,300

10281800 INDEPENDENCE CREEK BELOW PINYON CREEK, NEAR INDEPENDENCE, CALIF.

LOCATION.--Lat 36°46'43", long 118°15'49", in NE¼SE¼NW¼ sec.27, T.13 S., R.34 E., Inyo County, on right bank 0.2 mile downstream from Pinyon Creek, and 4.0 miles southwest of Independence.

DRAINAGE AREA.--18.1 sq mi.

PERIOD OF RECORD.--January 1923 to current year. Prior to October 1959 monthly discharge only, published in WSP 1734.

GAGE.--Water-stage recorder and Parshall flume (Cipolletti weir used during low flow). Altitude of gage is 5,300 ft (from topographic map). See WSP 1734 for history of changes prior to Dec. 13, 1936.

AVERAGE DISCHARGE.--49 years, 12.6 cfs (9,130 acre-ft per year).

EXTREMES.--Current year: Maximum discharge, 18 cfs June 8 (gage height, 1.08 ft); minimum daily, 1.2 cfs Dec. 8.
Period of record: Maximum discharge, 169 cfs June 1, 1969 (gage height, 4.45 ft); minimum daily, 0.70 cfs Jan. 25, 1926, Dec. 15, 1935.

REMARKS.--No regulation or diversion above station.

COOPERATION.--Records furnished by city of Los Angeles, Department of Water and Power and reviewed by Geological Survey.

DISCHARGE, IN CUBIC FEET PER SECOND, WATER YEAR OCTOBER 1971 TO SEPTEMBER 1972

DAY	OCT	NOV	DEC	JAN	FEB	MAR	APR	MAY	JUN	JUL	AUG	SEP
1	3.2	2.6	2.4	2.6	1.7	1.4	2.6	4.4	10	11	4.2	2.5
2	3.3	2.6	2.2	2.5	1.4	1.4	2.5	4.7	11	11	4.1	2.4
3	3.2	2.5	2.4	2.2	1.4	1.5	2.5	5.2	11	11	4.1	2.3
4	3.0	2.5	2.8	1.8	1.7	1.6	2.4	5.7	12	11	3.9	2.4
5	3.0	2.4	2.4	1.8	1.9	1.7	2.5	6.0	12	10	3.8	3.3
6	2.8	2.4	2.4	1.7	1.9	1.8	2.8	6.0	13	10	3.6	3.3
7	2.6	2.4	1.5	2.2	1.8	1.8	2.8	5.8	14	9.7	3.3	3.2
8	2.5	2.3	1.2	1.9	1.8	1.9	2.8	5.8	16	9.3	3.2	3.0
9	2.5	2.3	2.2	1.9	1.8	1.9	2.8	6.2	17	9.1	3.2	3.0
10	2.4	2.3	2.4	2.0	1.7	1.9	2.8	6.2	16	8.5	3.3	2.8
11	2.4	2.3	2.2	1.9	1.6	1.9	2.8	6.4	15	8.1	3.3	2.8
12	2.3	2.4	2.2	1.9	1.6	2.0	2.8	6.6	15	7.9	3.5	2.8
13	2.3	2.5	2.5	1.9	1.6	2.0	2.8	7.0	15	7.5	3.5	2.8
14	2.3	2.5	2.4	1.8	1.6	2.2	2.8	7.3	15	7.2	3.5	2.5
15	2.3	2.4	2.4	1.8	1.5	2.3	3.0	8.1	15	7.0	3.3	2.4
16	2.4	2.6	2.3	1.8	1.5	2.4	2.8	8.1	16	7.2	3.3	2.3
17	2.6	2.5	2.4	1.8	1.5	2.4	2.6	8.5	15	7.2	3.0	2.2
18	2.9	2.6	2.4	1.8	1.5	2.5	2.6	8.3	15	6.8	2.9	2.2
19	2.9	2.5	2.3	1.8	1.5	2.6	2.6	8.1	15	6.2	2.9	2.2
20	2.9	2.5	2.2	1.8	1.5	2.8	2.8	7.7	15	6.2	2.8	2.0
21	2.8	2.5	2.3	1.8	1.5	2.9	3.0	7.2	15	6.2	2.6	2.0
22	2.8	2.4	2.8	1.8	1.5	3.0	2.9	6.6	15	6.0	2.5	1.9
23	2.8	2.4	3.2	1.8	1.4	3.0	2.8	6.2	14	5.7	2.4	1.9
24	2.8	2.3	3.8	1.5	1.4	3.2	2.8	6.4	13	5.4	2.3	1.9
25	2.9	2.3	3.3	1.7	1.4	3.0	3.0	7.2	13	5.2	2.2	1.9
26	2.8	2.3	3.3	1.6	1.5	2.9	3.0	7.9	12	5.0	2.2	1.9
27	2.6	2.3	3.0	1.3	1.5	2.9	3.2	8.3	12	4.9	2.3	1.9
28	2.4	2.4	2.9	2.0	1.6	2.9	3.3	8.5	11	4.4	2.9	1.9
29	1.8	2.6	2.6	2.0	1.6	2.9	3.6	8.9	11	4.4	3.0	1.9
30	2.8	2.5	2.6	1.5	------	2.9	3.9	9.5	11	4.5	2.8	1.9
31	2.8	------	2.4	1.4	------	2.8	------	10	------	4.4	2.9	------
TOTAL	83.1	73.1	77.4	57.3	45.9	72.4	85.6	218.8	410	228.0	96.8	71.5
MEAN	2.68	2.44	2.50	1.85	1.58	2.34	2.85	7.06	13.7	7.35	3.12	2.38
MAX	3.3	2.6	3.8	2.6	1.9	3.2	3.9	10	17	11	4.2	3.3
MIN	1.8	2.3	1.2	1.3	1.4	1.4	2.4	4.4	10	4.4	2.2	1.9
AC-FT	165	145	154	114	91	144	170	434	813	452	192	142

CAL YR 1971 TOTAL 2,754.9 MEAN 7.55 MAX 39 MIN 1.2 AC-FT 5,460
WTR YR 1972 TOTAL 1,519.9 MEAN 4.15 MAX 17 MIN 1.2 AC-FT 3,010

10282480 MAZOURKA CREEK NEAR INDEPENDENCE, CALIF.

LOCATION.--Lat 36°50'50", long 118°05'05", in NE¼ lot 11, N½ sec.5, T.13 S., R.36 E., Inyo County, on right bank 7 miles northeast of Independence.

DRAINAGE AREA.--15.6 sq mi.

PERIOD OF RECORD.--October 1960 to September 1972 (discontinued).

GAGE.--Water-stage recorder. Altitude of gage is 4,800 ft (from topographic map).

AVERAGE DISCHARGE.--12 years, 0.070 cfs (51 acre-ft per year); median of yearly mean discharges, zero.

EXTREMES.--Current year: No flow during year.
Period of record: Maximum discharge, 1,300 cfs Dec. 6, 1966 (gage height, 2.46 ft, from inside gage, 3.10 ft, from profile of floodmarks), from rating curve extended above 1.0 cfs on basis of slope-area measurement of maximum flow; no flow for all or most of each year.

REMARKS.--No flow since Jan. 25, 1969. No regulation or diversion above station.

10284800 INYO CREEK NEAR LONE PINE, CALIF.

LOCATION.--Lat 36°35'50", long 118°10'55", in SE¼SE¼ sec.29, T.15 S., R.35 E., Inyo County, Inyo National Forest, at culvert on Mount Whitney Road, 7 miles west of Lone Pine.

DRAINAGE AREA.--1.54 sq mi.

PERIOD OF RECORD.--Water years 1963-68 (annual maximum), May 1968 to current year.

GAGE.--Water-stage recorder with rain-gage attachment. Altitude of gage is 6,000 ft (from topographic map). Prior to May 9, 1968, crest-stage gage at same site at datum 2.05 ft lower.

EXTREMES.--Current year: Maximum discharge, 5.7 cfs June 7 (gage height, 3.00 ft); no flow most of year.
Period of record: Maximum discharge, 42 cfs Aug. 2, 1969 (gage height, 7.57 ft), from rating curve extended above 6.6 cfs on basis of culvert computations of flow at gage heights 4.9 and 7.57 ft; no flow most of each year.

REMARKS.--Records good. No regulation or diversion above station.

DISCHARGE, IN CUBIC FEET PER SECOND, WATER YEAR OCTOBER 1971 TO SEPTEMBER 1972

DAY	OCT	NOV	DEC	JAN	FEB	MAR	APR	MAY	JUN	JUL	AUG	SEP
1									0			
2									0			
3									0			
4									0			
5									0			
6									0			
7									.98			
8									.98			
9									0			
10									0			
11									0			
12									0			
13									0			
14									0			
15									0			
16									0			
17									0			
18									0			
19									0			
20									0			
21									0			
22									0			
23									0			
24									0			
25									0			
26									0			
27									0			
28									0			
29									0			
30					------				0			
31		------			------		------		------			------
TOTAL	0	0	0	0	0	0	0	0	1.96	0	0	0
MEAN	0	0	0	0	0	0	0	0	.065	0	0	0
MAX	0	0	0	0	0	0	0	0	.98	0	0	0
MIN	0	0	0	0	0	0	0	0	0	0	0	0
AC-FT	0	0	0	0	0	0	0	0	3.9	0	0	0
(a)	0	0	0	0	0	0	0	0	.20	0	0	0

CAL YR 1971 TOTAL 1.23 MEAN .0030 MAX .12 MIN 0 AC-FT 2.4
WTR YR 1972 TOTAL 1.96 MEAN .0050 MAX .98 MIN 0 AC-FT 3.9

a Precipitation, in inches.

10285700 OWENS RIVER AT KEELER BRIDGE, NEAR LONE PINE, CALIF.

LOCATION.--Lat 36°34'46", long 118°01'06", in NE¼NW¼NW¼ sec.1, T.16 S., R.36 E., Inyo County, on left bank under old timber bridge 0.5 mile upstream from bridge on State Highway 190, and 3.4 miles southeast of Lone Pine.

DRAINAGE AREA.--2,604 sq mi.

PERIOD OF RECORD.--January 1927 to current year. Prior to October 1959 monthly discharge only, published in WSP 1314 and 1734.

GAGE.--Water-stage recorder and Cipolletti weir. Altitude of gage is 3,600 ft (from topographic map). See WSP 1734 for history of changes prior to Feb. 14, 1935. Feb. 14, 1935, to Nov. 22, 1964, water-stage recorder and Cipolletti weir at same site and datum. Nov. 23, 1964, to June 26, 1967, nonrecording gage and Cipolletti weir at same site and datum.

EXTREMES.--Current year: Maximum daily discharge, 14 cfs Dec. 27 (gage height, 0.55 ft); minimum daily, 0.18 cfs Aug. 14, 15, 19-21, 25.
Period of record: Maximum daily discharge, 1,360 cfs June 19, 1969 (gage height, 5.98 ft); no flow at times in some years.

REMARKS.--Natural flow affected by storage in several reservoirs, many natural lakes, diversions for irrigation, and return flow from irrigated areas. Major portion of discharge from basin is diverted through Los Angeles aqueduct. Discharge reported herein is wasted into Owens Lake.

COOPERATION.--Records furnished by city of Los Angeles, Department of Water and Power and reviewed by Geological Survey.

DISCHARGE, IN CUBIC FEET PER SECOND, WATER YEAR OCTOBER 1971 TO SEPTEMBER 1972

DAY	OCT	NOV	DEC	JAN	FEB	MAR	APR	MAY	JUN	JUL	AUG	SEP
1	2.4	5.0	9.2	12	12	12	11	11	5.3	1.2	.76	1.6
2	2.6	5.5	9.2	12	12	12	11	11	5.1	1.2	.62	1.6
3	2.6	5.8	9.2	12	12	12	11	10	4.9	1.1	.62	1.6
4	2.6	5.8	9.2	12	12	12	11	10	4.7	1.1	.62	1.6
5	2.6	6.1	9.5	11	12	12	11	10	4.6	1.1	.50	1.6
6	2.6	6.4	9.8	11	12	12	11	10	4.4	1.1	.50	1.6
7	2.6	6.7	9.8	12	12	12	11	9.8	4.2	1.1	.50	1.4
8	2.8	6.7	9.5	12	12	12	11	9.6	4.0	1.1	.50	1.4
9	2.8	6.4	9.5	12	12	12	11	9.4	4.0	1.1	.50	1.4
10	2.8	6.4	9.2	12	12	12	11	9.2	4.0	1.1	.50	1.2
11	3.0	6.7	9.8	12	12	12	11	9.0	3.7	1.1	.38	1.2
12	3.0	6.7	9.8	12	13	12	11	8.9	3.2	1.1	.38	1.4
13	3.0	7.0	9.8	12	12	12	11	8.7	3.2	1.1	.27	1.4
14	3.2	7.3	10	12	13	12	11	8.5	3.2	.91	.18	1.4
15	3.0	7.3	10	12	12	12	11	8.3	2.8	.91	.18	1.4
16	3.0	7.0	10	12	13	12	11	8.2	2.8	.91	.27	1.4
17	3.5	7.0	10	12	13	12	11	8.0	2.8	1.2	.27	1.4
18	3.7	7.3	10	12	13	11	11	8.0	2.8	1.1	.27	1.2
19	3.7	7.3	10	12	13	11	11	7.6	2.4	1.1	.18	1.2
20	4.0	7.6	10	12	13	11	11	7.4	2.4	.91	.18	1.4
21	4.2	7.9	10	12	13	11	11	7.2	2.0	.76	.18	1.6
22	4.2	7.9	10	12	13	11	11	7.1	2.0	.91	.27	1.8
23	4.0	7.9	11	12	13	11	11	6.9	2.0	.91	.27	2.0
24	4.2	8.2	12	12	13	10	11	6.7	2.0	.76	.27	2.0
25	4.2	8.5	12	12	13	10	11	6.5	2.0	.76	.18	2.0
26	4.2	8.5	12	12	13	10	11	6.4	2.0	.76	.27	2.6
27	4.5	8.8	14	12	13	10	11	6.2	2.0	.91	.38	2.6
28	4.2	8.8	13	12	13	10	11	6.0	1.6	.91	.91	2.8
29	4.2	8.8	12	12	12	10	11	5.8	1.6	.62	1.6	2.8
30	4.5	9.2	12	12	------	10	11	5.6	1.6	.76	1.6	2.6
31	5.0	------	12	12	------	11	------	5.4	------	.76	1.6	------
TOTAL	106.9	216.5	323.5	370	363	351	330	252.4	93.3	30.36	15.71	51.2
MEAN	3.45	7.22	10.4	11.9	12.5	11.3	11.0	8.14	3.11	.98	.51	1.71
MAX	5.0	9.2	14	12	13	12	11	11	5.3	1.2	1.6	2.8
MIN	2.4	5.0	9.2	11	12	10	11	5.4	1.6	.62	.18	1.2
AC-FT	212	429	642	734	720	696	655	501	185	60	31	102

CAL YR 1971 TOTAL 3,164.59 MEAN 8.67 MAX 29 MIN .62 AC-FT 6,280
WTR YR 1972 TOTAL 2,503.87 MEAN 6.84 MAX 14 MIN .18 AC-FT 4,970

10286000 COTTONWOOD CREEK NEAR OLANCHA, CALIF.

LOCATION.--Lat 36°26'20", long 118°04'48", (unsurveyed), Inyo County, Inyo National Forest, just downstream from intake to Cottonwood powerhouse, and 11.2 miles north of Olancha.

DRAINAGE AREA.--40.1 sq mi.

PERIOD OF RECORD.--January 1906 to March 1911, January 1914 to current year; combined records of creek and flow through powerhouse, November 1938 to current year. Monthly discharge only January 1914 to September 1959, published in WSP 1314 and 1734.

GAGE.--Water-stage recorder and Parshall flume (Cipolletti weir used during low flow) on creek, destroyed by flood of May 15, 1969; water-stage recorder and Cipolletti weir on powerhouse diversion. Altitude of gage is 4,660 ft (from topographic map). See WSP 1734 for history of changes prior to Oct. 31, 1938. Since May 15, 1969, supplementary gage at site 5.0 miles downstream at different datum.

AVERAGE COMBINED DISCHARGE.--62 years (1906-10, 1914-72), 22.5 cfs (16,300 acre-ft per year).

EXTREMES (Creek only).--Current year: Maximum discharge, 23 cfs June 7 (gage height, 0.82 ft); no flow Mar. 15.
Period of record: Maximum discharge, 520 cfs June 3, 1969 (gage height, unknown); no flow for some days in some years.
(Combined flow).--Current year: Maximum discharge, 23 cfs June 7; minimum daily, 1.7 cfs Aug. 23, 24, 26.
Period of record: Maximum discharge, 520 cfs June 3, 1969; minimum daily, 1.0 cfs July 22, 23, 1961.

REMARKS.--No regulation above station. Cottonwood powerhouse (maximum capacity, 22 cfs) has diverted since Nov. 13, 1908. For records of combined discharge of Cottonwood Creek and powerhouse, see following page.

COOPERATION.--Records furnished by city of Los Angeles, Department of Water and Power and reviewed by Geological Survey.

DISCHARGE, IN CUBIC FEET PER SECOND, WATER YEAR OCTOBER 1971 TO SEPTEMBER 1972

DAY	OCT	NOV	DEC	JAN	FEB	MAR	APR	MAY	JUN	JUL	AUG	SEP
1	5.2	5.5	5.2	6.6	7.7	5.7	11	11	12	8.0	3.1	3.3
2	5.2	5.5	5.2	6.6	7.1	6.3	12	12	15	7.7	2.9	3.1
3	5.2	5.5	5.2	6.6	6.8	6.8	12	13	14	7.4	2.7	2.9
4	5.2	5.5	5.2	5.5	6.6	7.7	12	14	14	7.1	2.5	3.3
5	5.0	5.5	5.5	5.7	6.3	8.0	12	14	14	7.1	2.5	4.2
6	4.7	5.5	5.2	6.3	6.3	8.0	11	14	15	6.8	2.3	4.7
7	4.7	5.5	4.2	6.3	6.3	8.2	11	13	19	6.6	2.1	4.5
8	4.7	5.2	4.0	6.3	6.3	9.2	11	13	19	6.3	2.1	4.2
9	4.7	5.2	5.0	6.3	6.3	9.4	11	13	17	6.3	2.1	4.2
10	4.5	5.2	5.0	6.3	6.3	9.8	11	13	14	6.0	2.1	4.0
11	4.2	5.5	4.7	6.3	6.0	10	10	13	14	6.0	2.1	3.8
12	2.3	6.0	4.5	6.3	6.0	10	9.8	13	13	5.5	2.5	3.6
13	4.2	5.5	4.5	6.3	5.7	2.1	9.8	13	13	5.5	2.5	3.6
14	2.1	5.2	5.0	6.3	6.0	.03	10	13	13	5.0	2.5	3.3
15	3.3	5.5	5.2	6.0	5.7	0	11	13	13	4.7	2.3	3.1
16	3.6	5.7	5.2	6.0	5.7	.16	11	13	13	5.2	2.3	3.1
17	5.0	6.0	5.2	6.0	5.7	6.8	11	13	13	6.3	2.3	3.1
18	5.5	5.7	5.2	6.0	5.7	11	11	13	12	5.7	2.1	3.1
19	5.5	5.7	5.2	6.0	5.7	11	9.8	13	12	5.2	2.1	3.1
20	5.7	5.7	5.0	6.0	5.7	11	10	13	11	4.7	2.1	3.1
21	5.5	6.0	5.0	6.0	5.7	11	11	13	9.8	4.7	2.1	3.1
22	5.2	5.7	5.5	6.0	5.7	11	11	12	11	4.7	1.9	3.1
23	5.2	5.5	5.5	6.0	5.7	11	11	12	11	4.5	1.6	3.1
24	5.2	5.7	5.7	5.7	5.7	11	11	11	10	4.0	1.6	3.1
25	5.2	5.5	5.7	6.0	5.7	11	10	11	10	3.8	1.8	3.1
26	5.2	5.2	5.7	6.3	5.7	10	11	11	10	3.3	1.6	3.3
27	1.3	5.5	5.7	9.2	5.7	9.4	11	10	9.8	3.1	1.9	3.3
28	2.1	5.2	5.7	10	5.7	1.3	11	11	9.2	2.9	4.7	3.3
29	3.8	5.0	6.0	10	5.7	.16	11	11	8.5	2.9	4.2	3.3
30	5.2	5.0	6.0	9.4	------	.09	11	12	8.2	3.1	3.3	3.3
31	5.5	------	6.3	8.8	------	5.2	------	12	------	3.6	3.6	------
TOTAL	139.9	164.9	162.2	207.1	175.2	222.34	326.4	386	377.5	163.7	75.5	103.3
MEAN	4.51	5.50	5.23	6.68	6.04	7.17	10.9	12.5	12.6	5.28	2.44	3.44
MAX	5.7	6.0	6.3	10	7.7	11	12	14	19	8.0	4.7	4.7
MIN	1.3	5.0	4.0	5.5	5.7	0	9.8	10	8.2	2.9	1.6	2.9
AC-FT	277	327	322	411	348	441	647	766	749	325	150	205

CAL YR 1971 TOTAL 1,839.98 MEAN 5.04 MAX 24 MIN 0 AC-FT 3,650
WTR YR 1972 TOTAL 2,504.04 MEAN 6.84 MAX 19 MIN 0 AC-FT 4,970

10286000 COTTONWOOD CREEK NEAR OLANCHA, CALIF.--Continued

COMBINED DISCHARGE, IN CUBIC FEET PER SECOND, OF COTTONWOOD CREEK AND POWERHOUSE NEAR OLANCHA, CALIF., WATER YEAR OCTOBER 1971 TO SEPTEMBER 1972

DAY	OCT	NOV	DEC	JAN	FEB	MAR	APR	MAY	JUN	JUL	AUG	SEP
1	5.7	6.0	5.7	6.9	7.9	6.0	11	12	12	8.2	3.2	3.4
2	5.7	6.0	5.7	6.9	7.3	6.6	12	14	15	7.9	3.0	3.2
3	5.7	6.0	5.7	6.9	7.0	7.1	12	14	14	7.6	2.8	3.0
4	5.7	6.0	5.7	5.8	6.8	8.0	12	16	14	7.3	2.6	3.4
5	5.5	6.0	6.0	6.0	6.5	8.3	12	16	14	7.3	2.6	4.3
6	5.2	6.0	5.7	6.6	6.5	8.5	11	15	15	7.0	2.4	4.8
7	5.2	6.0	4.7	6.6	6.5	8.7	11	14	19	6.8	2.2	4.6
8	5.2	5.7	4.5	6.6	6.5	9.9	11	14	19	6.5	2.2	4.3
9	5.2	5.7	5.5	6.6	6.5	10	11	14	17	6.5	2.2	4.3
10	5.0	5.7	5.5	6.6	6.5	11	11	14	14	6.2	2.2	4.1
11	4.7	6.0	5.2	6.6	6.2	11	10	14	14	6.2	2.2	3.9
12	2.8	6.5	5.0	6.6	6.2	11	10	14	13	5.7	2.6	3.7
13	4.7	6.0	5.0	6.6	5.9	3.1	10	14	13	5.7	2.6	3.7
14	2.6	5.7	5.5	6.6	6.2	8.0	10	14	13	5.2	2.6	3.4
15	3.8	6.0	5.7	6.3	5.9	8.0	11	14	13	4.9	2.4	3.2
16	4.1	6.2	5.7	6.3	5.9	8.2	11	13	13	5.4	2.4	3.2
17	5.5	6.5	5.7	6.3	5.9	14	11	13	13	6.5	2.4	3.2
18	6.0	6.2	5.7	6.3	5.9	14	11	13	12	5.9	2.2	3.2
19	6.0	6.2	5.7	6.3	5.9	14	10	13	12	5.4	2.2	3.2
20	6.2	6.2	5.5	6.3	5.9	14	10	13	11	4.9	2.2	3.2
21	6.0	6.5	5.5	6.3	5.9	15	11	13	10	4.9	2.2	3.2
22	5.7	6.2	6.0	6.3	5.9	15	11	12	11	4.9	2.0	3.2
23	5.7	6.0	6.0	6.3	5.9	13	11	12	11	4.7	1.7	3.2
24	5.7	6.2	6.2	6.0	5.9	13	11	11	10	4.2	1.7	3.2
25	5.7	6.0	6.2	6.3	5.9	14	10	11	10	4.0	1.9	3.2
26	5.7	5.7	6.2	6.6	5.9	12	11	11	10	3.5	1.7	3.4
27	1.8	6.0	6.2	9.4	5.9	11	11	10	10	3.3	2.0	3.4
28	2.6	5.7	6.2	10	5.9	5.8	11	11	9.4	3.1	4.8	3.4
29	4.3	5.5	6.5	10	5.9	8.2	11	11	8.7	3.1	4.3	3.4
30	5.7	5.5	6.5	9.6	------	8.1	11	12	8.4	3.3	3.4	3.4
31	6.0	------	6.8	9.0	------	10	------	12	------	3.8	3.7	------
TOTAL	155.4	179.9	177.7	215.5	181.0	314.5	327	404	378.5	169.9	78.6	106.3
MEAN	5.01	6.00	5.73	6.95	6.24	10.1	10.9	13.0	12.6	5.48	2.54	3.54
MAX	6.2	6.5	6.8	10	7.9	15	12	16	19	8.2	4.8	4.8
MIN	1.8	5.5	4.5	5.8	5.9	3.1	10	10	8.4	3.1	1.7	3.0
AC-FT	308	357	352	427	359	624	649	801	751	337	156	211

CAL YR 1971 TOTAL 3,995.6 MEAN 10.9 MAX 34 MIN 1.4 AC-FT 7,930
WTR YR 1972 TOTAL 2,688.3 MEAN 7.35 MAX 19 MIN 1.7 AC-FT 5,330

10287000 MONO LAKE NEAR MONO LAKE, CALIF.

LOCATION.--Lat 37°58'46", long 119°08'11", in NW¼ sec.5, T.2 N., R.26 E., Mono County, on west bank 1 mile south of town of Mono Lake.

DRAINAGE AREA.--785 sq mi.

PERIOD OF RECORD.--June 1912 to current year. Records prior to September 1934, published in WSP 765.

GAGE.--Nonrecording gage or reference point read once a week. Gage heights prior to October 1944 are converted to elevations above mean sea level in WSP 1314. Gage readings have been reduced to elevations above mean sea level.

EXTREMES.--Period of record: Maximum elevation observed, 6,428.1 ft July 18, 1919, present datum; minimum observed, 6,384.27 ft Sept. 28, 1972.

REMARKS.--Since 1941 water diverted to Owens Lake basin via Mono tunnel (capacity, 200 cfs).

COOPERATION.--Records furnished by city of Los Angeles, Department of Water and Power.

ELEVATION, IN FEET, WATER YEAR OCTOBER 1971 TO SEPTEMBER 1972

Date	Elevation	Date	Elevation	Date	Elevation	Date	Elevation
Oct. 4	6,386.11	Jan. 6	6,385.96	May 1	6,385.76	July 20	6,385.12
12	6,386.07	12	6,385.97	9	6,385.74	25	6,385.00
19	6,386.01	Feb. 17	6,385.89	15	6,385.68	31	6,384.94
28	6,386.03	23	6,385.88	25	6,385.62	Aug. 10	6,384.86
Nov. 4	6,385.88	Mar. 1	6,385.87	30	6,385.55	15	6,384.73
8	6,385.87	23	6,385.93	June 5	6,385.57	30	6,384.56
19	6,385.79	27	6,385.91	15	6,385.47	31	6,384.55
23	6,385.78	Apr. 4	6,385.85	19	6,385.43	Sept. 7	6,384.55
Dec. 6	6,385.80	14	6,385.86	26	6,385.38	15	6,384.51
14	6,385.65	19	6,385.87	July 6	6,385.29	20	6,384.36
20	6,385.65	26	6,385.78	14	6,385.18	28	6,384.27

10287070 MILL CREEK BELOW LUNDY LAKE, NEAR MONO LAKE, CALIF.

LOCATION.--Lat 38°01'58", long 119°12'53", in SE¼NE¼ sec.16, T.2 N., R.25 E., Mono County, Inyo National Forest, at road crossing 1,500 ft downstream from Lundy Lake Dam, and 4.9 miles northwest of Mono Lake Post Office.

DRAINAGE AREA.--18.1 sq mi (Natural flow).

PERIOD OF RECORD.--October 1942 to current year. Monthly and yearly mean discharges prior to October 1969, published in WRD Calif. 1971.

GAGE.--Water-stage recorder and Parshall flume on creek. Altitude of gage is 7,760 ft (from topographic map).

AVERAGE DISCHARGE (Actual flow).--31 years, 28.7 cfs (20,790 acre-ft per year).
(Natural flow).--31 years, 30.7 cfs (22,240 acre-ft per year).

EXTREMES (Actual flow).--Current year: Maximum daily discharge, 71 cfs June 29 to July 1; minimum daily, 7.6 cfs Apr. 25, 26.
Period of record (1970 to current year): Maximum daily discharge, 89 cfs July 5, 6, 1971; no flow Apr. 13-18, 1971.

REMARKS.--Flow regulated for power development by Lundy Lake (capacity, 3,820 acre-ft). Records for "actual flow" include Mill Creek, Lundy powerplant tailrace, and Upper Conway ditch. Records for "natural flow" are computed as the "actual flow" plus change in contents and evaporation of Lundy Lake.

COOPERATION.--Records furnished by Southern California Edison Co. and reviewed by Geological Survey, in connection with a Federal Power Commission project.

DISCHARGE, IN CUBIC FEET PER SECOND, WATER YEAR OCTOBER 1971 TO SEPTEMBER 1972

DAY	OCT	NOV	DEC	JAN	FEB	MAR	APR	MAY	JUN	JUL	AUG	SEP
1	20	14	8.2	8.2	8.2	8.2	13	8.0	62	71	21	12
2	20	14	8.2	8.2	8.2	8.2	11	8.2	66	69	20	12
3	20	14	8.2	8.2	8.2	8.2	11	12	66	69	20	12
4	19	14	8.2	8.2	8.2	8.2	11	15	67	69	20	12
5	19	13	8.2	8.2	8.2	8.2	11	14	67	60	20	12
6	19	12	8.2	8.2	8.2	8.7	11	14	68	50	20	12
7	19	12	8.2	8.2	8.2	9.5	11	14	67	49	20	12
8	19	12	8.2	8.2	8.2	9.5	11	20	67	49	19	12
9	19	11	8.2	8.2	8.2	9.5	11	24	68	50	19	12
10	19	11	8.2	8.2	8.2	9.5	11	24	66	44	19	12
11	19	11	8.2	8.2	8.2	11	11	24	65	37	19	13
12	19	11	8.2	8.2	8.2	11	12	24	66	28	19	13
13	19	11	8.2	8.2	8.2	11	10	24	66	19	19	13
14	19	11	8.2	8.2	8.2	11	7.8	24	66	19	19	13
15	19	11	8.2	8.2	8.2	11	7.8	29	66	20	19	13
16	19	11	8.2	8.2	8.2	11	7.8	35	67	20	19	13
17	19	9.3	8.2	8.2	8.2	12	8.0	48	68	20	17	13
18	14	8.2	8.2	8.2	8.2	14	8.0	65	68	21	16	13
19	14	8.2	8.2	8.2	8.2	14	8.0	54	68	20	16	13
20	14	8.2	8.2	8.2	8.2	16	8.0	44	68	20	16	13
21	14	8.2	8.2	8.2	8.2	19	8.0	45	68	20	16	13
22	14	8.2	8.2	8.2	8.2	19	8.0	45	69	20	15	16
23	14	8.2	8.2	8.2	8.2	19	8.0	39	69	20	15	14
24	14	8.2	8.2	8.2	8.2	19	13	35	69	21	15	14
25	14	8.2	8.2	8.2	8.2	19	7.6	35	68	21	15	14
26	14	8.2	8.2	8.2	8.2	19	7.6	35	68	20	15	14
27	14	8.2	8.2	8.2	8.2	19	7.8	35	69	18	15	14
28	14	8.2	8.2	8.2	8.2	17	7.8	39	64	20	15	14
29	14	8.2	8.2	8.2	8.2	16	7.8	54	71	21	15	14
30	14	8.2	8.2	8.2	------	16	8.0	60	71	21	15	14
31	14	------	8.2	8.2	------	16	------	54	------	21	12	------
TOTAL	522	308.9	254.2	254.2	237.8	407.7	284.0	1,000.2	2,018	1,027	540	391
MEAN	16.8	10.3	8.20	8.20	8.20	13.2	9.47	32.3	67.3	33.1	17.4	13.0
MAX	20	14	8.2	8.2	8.2	19	13	65	71	71	21	16
MIN	14	8.2	8.2	8.2	8.2	8.2	7.6	8.0	62	18	12	12
AC-FT	1,040	613	504	504	472	809	563	1,980	4,000	2,040	1,070	776
(a)	750	654	616	513	410	702	640	2,250	4,220	1,920	845	793

CAL YR 1971 TOTAL 10,306.60 MEAN 28.2 MAX 89 MIN 0 AC-FT 20,440 a 20,770
WTR YR 1972 TOTAL 7,245.00 MEAN 19.8 MAX 71 MIN 7.6 AC-FT 14,370 a 14,310

a Computed natural flow, in acre-feet.

10287290 RUSH CREEK BELOW AGNEW LAKE, NEAR JUNE LAKE, CALIF.

LOCATION.--Lat 37°45'32", long 119°07'47", in NE¼SW¼ sec.20, T.2 S., R.26 E., Mono County, Inyo National Forest, 500 ft downstream from Agnew Lake Dam, and 3.4 miles southwest of town of June Lake.

DRAINAGE AREA.--23.3 sq mi (Natural flow).

PERIOD OF RECORD.--October 1951 to current year. Monthly and yearly mean discharges prior to October 1969, published in WRD Calif. 1971.

GAGE.--Water-stage recorder and Parshall flume on creek. Altitude of gage is 8,480 ft (from topographic map).

AVERAGE DISCHARGE (Actual flow).--21 years, 55.1 cfs (39,920 acre-ft per year).
(Natural flow).--21 years, 60.4 cfs (43,760 acre-ft per year).

EXTREMES (Actual flow).--Current year: Maximum daily discharge, 97 cfs June 7-12; minimum daily, 21 cfs Mar. 20, 25.
Period of record (1970 to current year): Maximum daily discharge, 97 cfs July 4, 6, 7, 1971, June 7-12, 1972; minimum daily, 21 cfs Mar. 20, 25, 1972.

REMARKS.--Flow regulated for power development by Waugh, Gem, and Agnew Lakes (combined capacity, 23,420 acre-ft) and Rush Creek powerplant. "Actual flow" is total flow of Rush Creek below Agnew Lake and Rush Creek powerplant tailrace. "Natural flow" is the sum of "actual flow", change in contents and evaporation for Waugh, Gem, and Agnew Lakes.

COOPERATION.--Records furnished by Southern California Edison Co. and reviewed by Geological Survey, in connection with a Federal Power Commission project.

DISCHARGE, IN CUBIC FEET PER SECOND, WATER YEAR OCTOBER 1971 TO SEPTEMBER 1972

DAY	OCT	NOV	DEC	JAN	FEB	MAR	APR	MAY	JUN	JUL	AUG	SEP
1	78	40	40	42	43	40	23	30	62	91	52	43
2	78	40	42	42	43	31	25	37	73	91	47	43
3	74	40	44	42	43	25	24	45	73	90	52	43
4	51	40	44	41	41	26	23	46	74	91	51	43
5	51	40	43	39	43	25	23	48	75	90	43	45
6	44	38	43	41	43	25	22	48	84	90	44	44
7	44	38	42	40	43	25	23	47	97	90	44	43
8	44	38	42	41	44	25	23	46	97	90	44	43
9	40	38	43	42	42	23	22	46	97	89	52	43
10	42	38	42	42	43	23	24	48	97	89	54	43
11	42	40	42	41	43	24	25	45	97	89	42	42
12	42	42	42	41	43	23	22	45	97	73	42	42
13	42	40	42	41	43	23	23	45	96	64	43	42
14	42	42	42	41	43	23	23	43	96	63	42	43
15	42	40	42	39	42	24	25	44	95	64	43	44
16	42	40	42	43	42	26	24	45	95	59	44	42
17	42	52	42	40	42	25	33	43	95	63	43	42
18	40	58	42	40	48	23	24	45	94	63	43	42
19	42	52	42	42	41	23	22	50	94	62	43	42
20	42	50	42	42	45	21	24	49	94	63	43	42
21	42	40	42	42	44	22	32	48	94	62	43	64
22	40	40	42	41	43	23	23	62	93	63	43	78
23	40	40	42	43	42	22	23	70	93	62	44	74
24	40	40	42	42	43	22	42	66	93	62	43	42
25	40	40	42	42	41	21	25	51	93	62	44	42
26	40	40	42	43	41	23	22	48	92	62	44	43
27	40	41	42	43	43	23	26	51	92	63	43	42
28	40	41	50	41	42	23	29	51	92	62	43	42
29	40	41	42	42	44	22	29	50	92	61	43	44
30	40	41	42	44	------	23	29	53	92	62	43	43
31	40	------	42	43	------	22	------	53	------	62	43	------
TOTAL	1,406	1,250	1,315	1,288	1,243	749	757	1,498	2,708	2,247	1,387	1,370
MEAN	45.4	41.7	42.4	41.5	42.9	24.2	25.2	48.3	90.3	72.5	44.7	45.7
MAX	78	58	50	44	48	40	42	70	97	91	54	78
MIN	40	38	40	39	41	21	22	30	62	59	42	42
AC-FT	2,790	2,480	2,610	2,550	2,470	1,490	1,500	2,970	5,370	4,460	2,750	2,720
(a)	167	427	976	439	346	1,540	1,750	11,500	11,100	2,900	1,020	1,670

CAL YR 1971 TOTAL 17,551 MEAN 48.1 MAX 104 MIN 29 AC-FT 34,810 a 39,400
WTR YR 1972 TOTAL 17,218 MEAN 47.0 MAX 97 MIN 21 AC-FT 34,150 a 33,800

a Computed natural flow, in acre-feet.

10287400 RUSH CREEK ABOVE GRANT LAKE, NEAR JUNE LAKE, CALIF.

LOCATION.--Lat 37°48'23", long 119°06'29", in NE¼ sec.4, T.2 S., R.26 E., Mono County, on left bank in narrows, 0.6 mile upstream from Grant Lake, and 2.7 miles northwest of town of June Lake.

DRAINAGE AREA.--51.3 sq mi.

PERIOD OF RECORD.--December 1936 to current year. Prior to October 1959 monthly discharge only, published in WSP 1314 and 1734.

GAGE.--Water-stage recorder and Parshall flume. Altitude of gage is 7,200 ft (from topographic map).

AVERAGE DISCHARGE.--35 years (1937-72), 81.7 cfs (59,190 acre-ft per year).

EXTREMES.--Current year: Maximum discharge, 166 cfs June 2 (gage height, 1.93 ft); minimum daily, 40 cfs Mar. 30 to Apr. 1, Apr. 3, 9, 10, 20.
Period of record: Maximum discharge, 1,070 cfs July 14, 1967 (gage height, 6.20 ft); minimum daily, 5.5 cfs Sept. 6-8, 14, 1954.

REMARKS.--Flow regulated by Gem Lake, Lake Agnew, Waugh Lake (combined capacity, 23,400 acre-ft), and by many natural lakes. No diversion above station.

COOPERATION.--Records furnished by city of Los Angeles, Department of Water and Power and reviewed by Geological Survey.

DISCHARGE, IN CUBIC FEET PER SECOND, WATER YEAR OCTOBER 1971 TO SEPTEMBER 1972

DAY	OCT	NOV	DEC	JAN	FEB	MAR	APR	MAY	JUN	JUL	AUG	SEP
1	85	47	50	54	50	52	40	58	156	123	70	48
2	85	47	50	53	52	50	41	63	164	121	57	49
3	85	48	51	53	52	44	40	75	159	120	59	48
4	67	47	51	53	51	45	41	82	153	115	59	48
5	76	46	51	54	51	45	43	82	140	113	53	61
6	63	46	51	51	51	45	45	81	134	111	48	61
7	62	46	50	51	51	45	42	79	155	108	48	55
8	55	46	51	51	51	46	41	77	160	108	50	53
9	51	46	51	51	50	45	40	79	156	107	48	54
10	49	45	51	51	50	48	40	78	153	107	61	52
11	49	67	51	51	51	48	43	77	147	107	54	52
12	50	72	51	51	51	48	42	79	144	98	48	51
13	51	58	51	51	50	47	41	86	139	84	47	51
14	51	53	51	51	49	47	41	91	140	79	48	51
15	50	51	51	51	49	46	42	97	144	79	48	52
16	49	51	51	51	49	47	42	100	145	76	50	51
17	50	58	51	51	50	49	45	99	149	73	50	49
18	49	64	51	51	56	49	45	98	148	75	49	50
19	48	68	51	51	52	48	41	102	147	74	49	47
20	48	63	50	51	53	47	40	96	147	74	48	47
21	48	55	51	51	52	47	45	89	144	74	43	51
22	48	51	62	49	54	47	45	92	138	73	44	73
23	48	50	57	51	51	46	41	106	134	72	46	78
24	47	49	56	51	51	45	50	106	130	70	48	68
25	48	49	60	51	51	44	47	107	128	70	48	53
26	48	48	61	52	50	43	44	118	125	69	48	54
27	47	50	61	55	51	43	45	114	123	70	48	47
28	47	53	61	51	51	42	51	119	121	70	47	47
29	46	52	59	51	52	41	53	124	121	69	48	48
30	46	51	59	52	------	40	55	138	121	71	48	49
31	46	------	57	52	------	40	------	149	------	72	48	------
TOTAL	1,692	1,577	1,660	1,598	1,482	1,419	1,311	2,941	4,265	2,732	1,560	1,598
MEAN	54.6	52.6	53.5	51.5	51.1	45.8	43.7	94.9	142	88.1	50.3	53.3
MAX	85	72	62	55	56	52	55	149	164	123	70	78
MIN	46	45	50	49	49	40	40	58	121	69	43	47
AC-FT	3,360	3,130	3,290	3,170	2,940	2,810	2,600	5,830	8,460	5,420	3,090	3,170

CAL YR 1971 TOTAL 25,615 MEAN 70.2 MAX 201 MIN 30 AC-FT 50,810
WTR YR 1972 TOTAL 23,835 MEAN 65.1 MAX 164 MIN 40 AC-FT 47,280

10287900 LEE VINING CREEK NEAR LEE VINING, CALIF.

LOCATION.--Lat 37°55'46", long 119°10'10", in SE¼NW¼SW¼ sec.24, T.1 N., R.25 E., Mono County, on right bank 0.8 mile upstream from Gibbs Canyon, and 3.3 miles southwest of Lee Vining.

DRAINAGE AREA.--34.9 sq mi.

PERIOD OF RECORD.--April 1934 to current year. Prior to October 1959 monthly discharge only, published in WSP 1314 and 1734.

GAGE.--Water-stage recorder and partial concrete control. Altitude of gage is 7,400 ft (from topographic map). See WSP 1734 for history of changes prior to Aug. 6, 1944.

AVERAGE DISCHARGE.--38 years, 66.7 cfs (48,320 acre-ft per year).

EXTREMES.--Current year: Maximum discharge, 194 cfs June 1 (gage height, 2.83 ft); minimum daily, 19 cfs Aug. 25-27.
Period of record: Maximum discharge, 590 cfs July 4, 1967 (gage height, 4.42 ft); no flow Nov. 29, 1935.

REMARKS.--Flow regulated for power development by Ellery, Saddlebag, Tioga Lakes (combined capacity, 13,269 acre-ft), and by several small natural lakes. No diversion above station.

COOPERATION.--Records furnished by city of Los Angeles, Department of Water and Power and reviewed by Geological Survey.

DISCHARGE, IN CUBIC FEET PER SECOND, WATER YEAR OCTOBER 1971 TO SEPTEMBER 1972

DAY	OCT	NOV	DEC	JAN	FEB	MAR	APR	MAY	JUN	JUL	AUG	SEP
1	22	33	39	28	25	45	27	53	182	88	49	40
2	38	34	38	29	36	31	27	66	190	80	33	52
3	38	34	37	29	25	32	27	96	185	78	36	40
4	38	37	36	30	25	27	27	93	174	75	36	36
5	37	38	36	28	24	28	27	71	169	70	34	55
6	36	38	36	39	25	27	28	51	164	63	32	68
7	37	38	30	41	27	32	29	59	169	47	32	52
8	37	37	27	35	37	44	30	75	164	31	31	40
9	34	37	27	35	37	54	30	82	160	30	35	31
10	34	36	25	31	26	47	30	75	124	36	43	33
11	33	41	24	27	25	37	30	60	96	59	86	40
12	33	41	24	36	25	38	29	119	100	59	66	39
13	33	40	31	35	25	38	28	136	155	44	43	38
14	33	32	31	35	25	38	31	125	150	44	34	36
15	35	25	30	35	25	38	32	143	128	43	27	25
16	36	30	31	34	25	38	32	153	148	50	26	27
17	37	28	35	28	26	39	31	136	148	68	26	26
18	38	28	35	26	41	40	31	86	126	51	26	26
19	38	32	35	27	26	40	30	126	132	43	25	26
20	38	47	35	31	32	40	30	84	153	43	24	25
21	38	57	30	38	28	41	29	62	153	43	24	25
22	38	45	27	27	26	40	29	52	118	39	23	26
23	37	28	26	26	25	40	29	78	91	37	21	35
24	36	27	26	26	25	40	38	91	88	38	21	35
25	36	31	28	25	25	40	29	146	86	33	19	25
26	36	43	36	24	27	37	30	129	84	31	19	35
27	33	48	36	21	33	28	32	146	80	32	19	25
28	25	48	37	24	43	27	78	160	100	32	20	26
29	26	38	37	24	44	27	60	164	113	32	20	27
30	32	39	27	26	------	26	50	170	115	32	24	26
31	33	------	26	23	------	27	------	173	------	45	29	------
TOTAL	1,075	1,110	978	923	838	1,126	990	3,260	4,045	1,496	983	1,040
MEAN	34.7	37.0	31.5	29.8	28.9	36.3	33.0	105	135	48.3	31.7	34.7
MAX	38	57	39	41	44	54	78	173	190	88	86	68
MIN	22	25	24	21	24	26	27	51	80	30	19	25
AC-FT	2,130	2,200	1,940	1,830	1,660	2,230	1,960	6,470	8,020	2,970	1,950	2,060

CAL YR 1971 TOTAL 23,823 MEAN 65.3 MAX 264 MIN 12 AC-FT 47,250
WTR YR 1972 TOTAL 17,864 MEAN 48.8 MAX 190 MIN 19 AC-FT 35,430

11010900 WILSON CREEK TRIBUTARY NEAR DULZURA, CALIF.

LOCATION.--Lat 32°43'22", long 116°42'06", in NE¼SE¼NW¼ sec.5, T.17 S., R.3 E., San Diego County, on right bank on Japatul Lyons Valley Road, 6.6 miles northeast of Dulzura.

DRAINAGE AREA.--0.61 sq mi.

PERIOD OF RECORD.--Water years 1962-67 (annual maximum), October 1967 to current year.

GAGE.--Water-stage recorder with rain-gage attachment and culvert control. Altitude of gage is 2,200 ft (from topographic map).

AVERAGE DISCHARGE.--5 years (1967-72), 0.047 cfs (34 acre-ft per year).

EXTREMES.--Current year: Maximum discharge, 24 cfs Dec. 7 (gage height, 9.05 ft); no flow most of year.
Period of record: Maximum discharge, 98 cfs Dec. 6, 1966 (gage height, 12.22 ft, from crest-stage gage), from rating curve extended above 1.6 cfs on basis of computation of flow through culvert at gage heights 8.0, 10.67, and 12.22 ft; no flow all or most of each year.

REMARKS.--Records good. No regulation or diversion above station.

DISCHARGE, IN CUBIC FEET PER SECOND, WATER YEAR OCTOBER 1971 TO SEPTEMBER 1972

DAY	OCT	NOV	DEC	JAN	FEB	MAR	APR	MAY	JUN	JUL	AUG	SEP
1	0	0	0						0			
2	0	0	0						0			
3	0	0	.05						0			
4	0	0	.67						0			
5	0	0	0						0			
6	0	0	0						.02			
7	0	0	.78						0			
8	0	0	0						0			
9	0	0	0						0			
10	0	0	0						0			
11	0	0	0						0			
12	0	0	0						0			
13	0	0	0						0			
14	0	0	0						0			
15	.27	.67	0						0			
16	.02	0	0						0			
17	.26	0	0						0			
18	0	0	0						0			
19	0	0	0						0			
20	0	0	0						0			
21	0	0	0						0			
22	0	0	.07						0			
23	0	0	0						0			
24	0	0	0						0			
25	0	0	.69						0			
26	0	0	1.0						0			
27	0	0	.07						0			
28	0	0	0						0			
29	0	0	0						0			
30	0	0	0		------				0			
31	0	------	0		------		------		------			------
TOTAL	.55	.67	3.33	0	0	0	0	0	.02	0	0	0
MEAN	.018	.022	.11	0	0	0	0	0	.0007	0	0	0
MAX	.27	.67	1.0	0	0	0	0	0	.02	0	0	0
MIN	0	0	0	0	0	0	0	0	0	0	0	0
AC-FT	1.1	1.3	6.6	0	0	0	0	0	.04	0	0	0
(a)	.6	.2	3.5	.1	0	0	.1	.1	.4	0	0	.1

CAL YR 1971 TOTAL 10.27 MEAN .028 MAX 2.9 MIN 0 AC-FT 20
WTR YR 1972 TOTAL 4.57 MEAN .013 MAX 1.0 MIN 0 AC-FT 9.1

a Precipitation, in inches.

11012000 COTTONWOOD CREEK ABOVE TECATE CREEK, NEAR DULZURA, CALIF.

LOCATION.--Lat 32°34'30", long 116°45'11", in NW¼NW¼SW¼ sec.26, T.18 S., R.2 E., San Diego County, on right bank 0.8 mile upstream from confluence with Tecate Creek, and 5.1 miles south of Dulzura.

DRAINAGE AREA.--310 sq mi.

PERIOD OF RECORD.--October 1936 to current year.

GAGE.--Water-stage recorder. Datum of gage is 569.40 ft above mean sea level (levels by International Boundary and Water Commission).

AVERAGE DISCHARGE.--36 years, 6.43 cfs (4,660 acre-ft per year); median of yearly mean discharges, 0.4 cfs (290 acre-ft per year).

EXTREMES.--Current year: No flow during year.
Period of record: Maximum discharge, 4,340 cfs Feb. 7, 1937 (gage height, 9.65 ft), from rating curve extended above 1,500 cfs; no flow for part of each year.

REMARKS.--No flow since May 16, 1971. Flow regulated by Morena Reservoir (capacity, 50,210 acre-ft) and Barrett Reservoir (capacity, 44,760 acre-ft). Water released from Barrett Reservoir through Dulzura conduit is diverted to Lower Otay Reservoir. Figures for the calendar year 1971 are as follows: Maximum daily discharge, 2.0 cfs; minimum, zero; mean, 0.051 cfs; runoff, 37 acre-ft.

11012500 CAMPO CREEK NEAR CAMPO, CALIF.

LOCATION.--Lat 32°35'28", long 116°31'29", in SW¼NE¼SE¼ sec.24, T.18 S., R.4 E., San Diego County, on left bank just upstream from bridge on State Highway 94, 3.5 miles southwest of Campo.

DRAINAGE AREA.--85.0 sq mi, of which 3 sq mi are in Mexico.

PERIOD OF RECORD.--October 1936 to current year.

GAGE.--Water-stage recorder and broad-crested weir. Datum of gage is 2,178.92 ft above mean sea level. Prior to Dec. 1, 1954, at datum 1 ft higher.

AVERAGE DISCHARGE.--36 years, 1.76 cfs (1,280 acre-ft per year); median of yearly mean discharges, 0.1 cfs (72 acre-ft per year).

EXTREMES.--Current year: Maximum discharge, 0.56 cfs Oct. 9 (gage height, 1.21 ft); no flow for part of year. Period of record: Maximum discharge, 880 cfs Feb. 6, 1937 (gage height, 4.80 ft, present datum), from rating curve extended above 110 cfs on basis of velocity mean-depth relation and cross-sectional area at control; no flow for part of most years.

REMARKS.--Records good. Flow partly regulated since August 1956 by small conservation reservoir. No diversion above station.

DISCHARGE, IN CUBIC FEET PER SECOND, WATER YEAR OCTOBER 1971 TO SEPTEMBER 1972

DAY	OCT	NOV	DEC	JAN	FEB	MAR	APR	MAY	JUN	JUL	AUG	SEP
1	.02	.02	.03	.05	.05	.03	0	.01	.03	.02	0	
2	.02	.02	.03	.05	.04	.03	0	.02	.03	.02	0	
3	.02	.02	.04	.05	.05	.03	0	.02	.03	.01	0	
4	.02	.02	.06	.05	.05	.03	0	.04	.03	.01	0	
5	.01	.02	.05	.05	.06	.02	.01	.04	.03	.01	0	
6	.01	.02	.05	.05	.06	.02	.01	.04	.06	.01	0	
7	0	.02	.05	.05	.06	.02	.01	.04	.03	.01	0	
8	0	.02	.05	.05	.06	.02	.01	.04	.03	.01	0	
9	.01	.02	.05	.05	.06	.02	.01	.04	.03	.01	0	
10	0	.03	.05	.05	.05	.02	.01	.04	.02	.01	0	
11	0	.03	.05	.06	.05	.01	.02	.03	.02	.01	0	
12	0	.03	.05	.06	.05	.01	.03	.03	.01	.01	.01	
13	0	.03	.06	.06	.05	.01	.03	.03	.01	.01	.01	
14	.01	.03	.05	.05	.06	.01	.02	.03	.01	.01	.01	
15	.01	.03	.05	.06	.05	0	.01	.03	.01	.01	0	
16	.03	.03	.05	.05	.06	0	.01	.03	.01	.01	0	
17	.04	.03	.05	.05	.05	.01	.01	.04	.01	.01	0	
18	.03	.03	.05	.05	.05	.01	.02	.05	.01	.01	0	
19	.02	.03	.05	.05	.04	.01	.03	.07	.01	.02	0	
20	.02	.03	.05	.05	.04	.01	.02	.05	.02	.02	0	
21	.02	.03	.05	.05	.05	.01	.02	.04	.02	.01	0	
22	.02	.03	.07	.05	.04	.01	.01	.04	.02	.01	0	
23	.02	.03	.05	.05	.04	0	.01	.04	.02	.01	0	
24	.02	.03	.05	.04	.04	0	.01	.05	.02	.01	0	
25	.02	.03	.07	.05	.04	0	.01	.04	.02	.01	0	
26	.02	.03	.05	.05	.03	0	.01	.04	.02	0	0	
27	.02	.03	.06	.05	.03	0	0	.03	.02	0	0	
28	.03	.03	.05	.05	.03	0	.01	.03	.01	0	0	
29	.02	.03	.05	.05	.03	0	.01	.04	.01	.01	0	
30	.02	.03	.05	.04	------	0	0	.04	.01	0	0	
31	.02	------	.05	.05	------	0	------	.03	------	.01	0	------
TOTAL	.50	.81	1.57	1.57	1.37	.34	.35	1.14	.61	.31	.03	0
MEAN	.016	.027	.051	.051	.047	.011	.012	.037	.020	.010	.001	0
MAX	.04	.03	.07	.06	.06	.03	.03	.07	.06	.02	.01	0
MIN	0	.02	.03	.04	.03	0	0	.01	.01	0	0	0
AC-FT	1.0	1.6	3.1	3.1	2.7	.7	.7	2.3	1.2	.6	.06	0

CAL YR 1971 TOTAL 20.42 MEAN .056 MAX .20 MIN 0 AC-FT 41
WTR YR 1972 TOTAL 8.60 MEAN .024 MAX .07 MIN 0 AC-FT 17

PEAK DISCHARGE (BASE, 20 CFS).--No peak above base.

NOTE.--No gage-height record Dec. 5 to Jan. 6.

11013000 TIJUANA RIVER NEAR DULZURA, CALIF.

LOCATION.--Lat 32°33'56", long 116°46'27", in E½ sec.33, T.18 S., R.2 E., San Diego County, on left bank 0.5 mile downstream from confluence of Cottonwood and Tecate Creeks, and 5.5 miles south of Dulzura.

DRAINAGE AREA.--481 sq mi, of which 70 sq mi are in Mexico.

PERIOD OF RECORD.--October 1936 to current year.

GAGE.--Water-stage recorder. Datum of gage is 542.42 ft above mean sea level (levels by International Boundary and Water Commission). Prior to Sept. 19, 1939, at datum 2.00 ft higher.

AVERAGE DISCHARGE.--36 years, 10.3 cfs (7,460 acre-ft per year); median of yearly mean discharges, 1.1 cfs (800 acre-ft per year).

EXTREMES.--Current year: Maximum discharge, 66 cfs June 6 (gage height, 3.23 ft); no flow Aug. 6 to Sept. 6. Period of record: Maximum discharge, 4,700 cfs Feb. 7, 1937 (gage height, 8.50 ft, present datum), from rating curve extended above 300 cfs on basis of velocity, mean-depth, and area studies; no flow for part of most years.

REMARKS.--Records good. Flow regulated by Morena Reservoir (capacity, 50,210 acre-ft) and Barrett Reservoir (capacity, 44,760 acre-ft). Water diverted from Cottonwood Creek at Barrett Dam by Dulzura conduit to Jamul Creek.

DISCHARGE, IN CUBIC FEET PER SECOND, WATER YEAR OCTOBER 1971 TO SEPTEMBER 1972

DAY	OCT	NOV	DEC	JAN	FEB	MAR	APR	MAY	JUN	JUL	AUG	SEP
1	.08	.12	.18	.21	.18	.15	.08	.12	.05	.13	.01	0
2	.08	.12	.15	.21	.15	.15	.08	.12	.05	.13	.01	0
3	.08	.12	.18	.21	.15	.15	.08	.14	.05	.13	.01	0
4	.07	.12	.21	.18	.15	.12	.08	.14	.05	.12	.01	0
5	.07	.12	.18	.18	.18	.10	.08	.15	.07	.11	.01	0
6	.04	.12	.18	.15	.18	.10	.08	.17	3.3	.10	0	0
7	.03	.12	.18	.18	.18	.08	.08	.17	12	.08	0	.01
8	.03	.12	.18	.18	.18	.10	.12	.18	.67	.08	0	.04
9	.03	.12	.18	.18	.18	.08	.12	.17	.52	.07	0	.05
10	.03	.12	.18	.18	.18	.08	.10	.18	.39	.06	0	.05
11	.01	.12	.15	.15	.18	.08	.12	.18	.30	.06	0	.06
12	.01	.15	.15	.15	.18	.08	.12	.16	.26	.06	0	.07
13	.01	.12	.18	.15	.18	.08	.12	.15	.20	.05	0	.06
14	.02	.12	.18	.12	.17	.08	.12	.14	.10	.04	0	.06
15	.04	.12	.18	.12	.17	.08	.12	.14	.10	.04	0	.06
16	.08	.12	.18	.12	.17	.08	.10	.14	.10	.03	0	.05
17	.10	.12	.18	.12	.17	.08	.12	.13	.12	.03	0	.05
18	.10	.15	.18	.12	.17	.10	.12	.13	.12	.03	0	.05
19	.10	.12	.15	.15	.17	.10	.15	.17	.10	.03	0	.05
20	.10	.12	.15	.15	.17	.08	.12	.18	.15	.03	0	.05
21	.08	.12	.15	.15	.17	.08	.12	.16	.16	.03	0	.04
22	.08	.12	.25	.12	.16	.08	.12	.14	.19	.02	0	.03
23	.10	.12	.21	.12	.16	.08	.12	.12	.19	.02	0	.02
24	.10	.15	.21	.15	.16	.08	.12	.09	.17	.02	0	.02
25	.12	.15	.21	.15	.16	.08	.10	.08	.17	.02	0	.02
26	.12	.12	.34	.15	.16	.08	.12	.08	.17	.03	0	.02
27	.12	.12	.25	.15	.16	.08	.12	.07	.16	.02	0	.03
28	.15	.15	.34	.15	.15	.08	.12	.06	.16	.02	0	.03
29	.15	.15	.29	.15	.15	.10	.12	.06	.16	.02	0	.02
30	.15	.15	.25	.15	------	.10	.12	.05	.13	.02	0	.02
31	.12	------	.21	.15	------	.08	------	.05	------	.01	0	------
TOTAL	2.40	3.81	6.19	4.80	4.87	2.87	3.29	4.02	20.36	1.64	.05	.96
MEAN	.077	.13	.20	.15	.17	.093	.11	.13	.68	.053	.002	.032
MAX	.15	.15	.34	.21	.18	.15	.15	.18	12	.13	.01	.07
MIN	.01	.12	.15	.12	.15	.08	.08	.05	.05	.01	0	0
AC-FT	4.8	7.6	12	9.5	9.7	5.7	6.5	8.0	40	3.3	.1	1.9

CAL YR 1971 TOTAL 79.78 MEAN .22 MAX 6.1 MIN .01 AC-FT 158
WTR YR 1972 TOTAL 55.26 MEAN .15 MAX 12 MIN 0 AC-FT 110

11013200 RODRIGUEZ RESERVOIR AT RODRIGUEZ DAM, BAJA CALIFORNIA, MEXICO

LOCATION.--Lat 32°26'40", long 116°54'25", Baja California, Mexico, at Rodriguez Dam on Rio de las Palmas, 0.2 mile upstream from Arroyo Matanuco, and 10 miles southeast of Tijuana.

DRAINAGE AREA.--977 sq mi, of which 10 sq mi are in the United States.

PERIOD OF RECORD.--April 1937 to current year. Published with record for Tijuana River near Nestor, Calif., October 1953 to September 1957. Monthend contents for April 1937 to September 1950 published in WSP 1315-B and for October 1950 to September 1960 in WSP 1735.

GAGE.--Nonrecording gage read once a day. Datum of gage is at mean sea level (levels by National Irrigation Commission, Mexico).

EXTREMES.--Current year: Maximum contents, 357 acre-ft Sept. 30; minimum, 146 acre-ft Oct. 1.
Period of record: Reservoir spilled during March 1938, September 1940, February to May 1941, March 1942, and February, March 1944; reservoir dry Apr. 2, 1964, to Apr. 9, 1965, Aug. 21 to Nov. 22, 1965.

REMARKS.--Reservoir is formed by thin-shell concrete arch dam completed in 1936; storage began in 1937. Capacity table is based on surveys made in 1927. Maximum storage at crest of spillway gates (elevation, 410.10 ft), 111,070 acre-ft; at spillway lip (elevation, 380.08 ft), 74,580 acre-ft; dead storage below outlet (elevation, 267.39 ft), 1,650 acre-ft included in contents. Reservoir stores water for irrigation of 3,000 acres on both banks 0.5 to 5.5 miles downstream and municipal supply for city of Tijuana.

COOPERATION.--Records furnished by Ministry of Hydraulic Resources, Government of Mexico, through International Boundary and Water Commission, United States section.

MONTHEND CONTENTS, WATER YEAR OCTOBER 1971 TO SEPTEMBER 1972

Date	Contents (acre-feet)	Change in contents (acre-feet)
Sept. 30	146	-
Oct. 31	224	+78
Nov. 30	263	+39
Dec. 31	298	+35
CAL YR 1971	-	-1,282
Jan. 31	315	+17
Feb. 29	325	+10
Mar. 31	329	+4
Apr. 30	329	0
May 31	325	-4
June 30	319	-6
July 31	306	-13
Aug. 31	298	-8
Sept. 30	357	+59
WTR YR 1972	-	+211

11013500 TIJUANA RIVER NEAR NESTOR, CALIF.

LOCATION.--Lat 32°33'06", long 117°05'00", on line between secs. 3 and 4, T.19 S., R.2 W., San Diego County, on downstream side of county highway bridge, 1.7 miles south of Nestor, and 2.9 miles upstream from mouth.

DRAINAGE AREA.--1,690 sq mi, of which 1,236 sq mi are in Mexico.

PERIOD OF RECORD.--October 1914 to September 1915, October 1936 to current year.

GAGE.--Water-stage recorder. Datum of gage is 15.14 ft above mean sea level. See WSP 1735 for history of changes prior to Aug. 5, 1958.

AVERAGE DISCHARGE.--37 years, 30.4 cfs (22,020 acre-ft per year); median of yearly mean discharges, 2.3 cfs (1,700 acre-ft per year).

EXTREMES.--Current year: No flow during year.
1936 to current year: Maximum discharge, 17,700 cfs Feb. 7, 1937 (gage height, 8.20 ft, datum then in use), from rating curve extended above 2,000 cfs on basis of velocity-depth relation and cross section after peak; no flow in parts of each year.

REMARKS.--Records good. Flow regulated by Morena Reservoir (capacity, 50,210 acre-ft) and Barrett Reservoir (capacity, 44,760 acre-ft) in the United States, and Rodriguez Reservoir (see sta 11013200) in Mexico. Water diverted from Cottonwood Creek at Barrett Dam by Dulzura conduit to Jamul Creek. AVERAGE DISCHARGE represents flow to the ocean regardless of upstream development. Records of suspended-sediment loads for the current year are published in Part 2 of this report.

11014000 JAMUL CREEK NEAR JAMUL, CALIF.

LOCATION.--Lat 32°38'15", long 116°53'00", in NE¼ sec.4, T.18 S., R.1 E., San Diego County, on right bank 300 ft upstream from county road crossing at upper end of Lower Otay Reservoir, 1.4 miles downstream from Dulzura Creek, and 5.5 miles south of Jamul.

DRAINAGE AREA.--70.3 sq mi.

PERIOD OF RECORD.--April 1940 to current year.

GAGE.--Water-stage recorder and broad-crested weir control with low-water Parshall flume. Datum of gage is 511.64 ft above mean sea level. Prior to Oct. 1, 1951, at datum 1.00 ft higher.

EXTREMES.--Current year: Maximum discharge, 56 cfs June 6 (gage height, 2.70 ft); no flow most of year. Period of record: Maximum discharge, 4,000 cfs Dec. 1, 1947 (gage height, 6.42 ft, present datum), from rating curve extended above 1,200 cfs; no flow at times in some years.

REMARKS.--Records good. No regulation above station. Water diverted from Cottonwood Creek by Dulzura conduit discharges into Jamul Creek via Dulzura Creek and is included in discharge for this station (see sta 11012000).

DISCHARGE, IN CUBIC FEET PER SECOND, WATER YEAR OCTOBER 1971 TO SEPTEMBER 1972

DAY	OCT	NOV	DEC	JAN	FEB	MAR	APR	MAY	JUN	JUL	AUG	SEP
1			0					0	14			
2			0					0	15			
3			0					0	15			
4			0					0	12			
5			0					0	5.1			
6			0					0	13			
7			0					0	16			
8			0					0	12			
9			0					0	8.1			
10			0					0	6.1			
11			0					0	4.6			
12			0					0	2.6			
13			0					0	1.8			
14			0					0	1.6			
15			0					0	1.3			
16			0					0	.61			
17			0					0	.32			
18			0					0	.33			
19			0					0	.24			
20			0					0	.30			
21			0					0	.26			
22			0					0	.17			
23			0					0	.10			
24			0					0	.10			
25			0					.20	.10			
26			0					8.4	0			
27			.41					13	0			
28			.41					15	0			
29			.24					4.1	0			
30			.10		------			.44	0			
31		------	.04		------		------	2.4	------			------
TOTAL	0	0	1.20	0	0	0	0	43.54	130.73	0	0	0
MEAN	0	0	.039	0	0	0	0	1.40	4.36	0	0	0
MAX	0	0	.41	0	0	0	0	15	16	0	0	0
MIN	0	0	0	0	0	0	0	0	0	0	0	0
AC-FT	0	0	2.4	0	0	0	0	86	259	0	0	0

CAL YR 1971 TOTAL 56.89 MEAN .16 MAX 10 MIN 0 AC-FT 113
WTR YR 1972 TOTAL 175.47 MEAN .48 MAX 16 MIN 0 AC-FT 348

11015000 SWEETWATER RIVER NEAR DESCANSO, CALIF.

LOCATION.--Lat 32°50'05", long 116°37'20", in NW¼SE¼ sec.25, T.15 S., R.3 E., San Diego County, on right bank at county road bridge, 0.7 mile downstream from unnamed tributary, and 1.3 miles south of Descanso.

DRAINAGE AREA.--45.5 sq mi.

PERIOD OF RECORD.--October 1905 to September 1927, October 1956 to current year. Monthly discharge only for October to December 1905, January to February 1916, February, March, June to September 1927, published in WSP 1315-B. Combined records of river and diversion, October 1956 to current year.

GAGE.--Water-stage recorder on river; water-stage recorder on concrete diversion. Datum of gage is 3,269.24 ft above mean sea level. Prior to June 25, 1927, nonrecording gages at several sites within 0.1 mile upstream at various datums.

AVERAGE DISCHARGE (Creek only).--38 years, 10.5 cfs (7,610 acre-ft per year); median of yearly mean discharges, 6.1 cfs (4,400 acre-ft per year).
(Combined).--16 years, 3.65 cfs (2,640 acre-ft per year); median of yearly mean discharges, 0.9 cfs (650 acre-ft per year).

EXTREMES (Creek only).--Current year: Maximum discharge, 13 cfs Dec. 27 (gage height, 3.60 ft); no flow for many days.
Period of record: Maximum discharge, 11,200 cfs Feb. 16, 1927 (gage height, 13.2 ft, from floodmarks, site and datum then in use), on basis of slope-area measurement of maximum flow; no flow for many days in most years.
(Combined).--Current year: Maximum discharge, 13 cfs Dec. 27; no flow for many days.
Period of record: Maximum discharge, 3,890 cfs Dec. 6, 1966; no flow for many days in each year.

REMARKS.--Records good. No regulation above station. Sweetwater River diversion diverts 0.3 mile above station for irrigation below. For records of combined discharge of river and diversion, see following page.

DISCHARGE, IN CUBIC FEET PER SECOND, WATER YEAR OCTOBER 1971 TO SEPTEMBER 1972

DAY	OCT	NOV	DEC	JAN	FEB	MAR	APR	MAY	JUN	JUL	AUG	SEP
1	0	.17	.15	1.0	.49	.44	.17	0				
2	0	.17	.17	.97	.49	.44	.23	0				
3	0	.17	.23	.97	.49	.44	.27	0				
4	0	.17	.44	.81	.49	.44	.30	0				
5	0	.17	.17	.81	.74	.44	.30	0				
6	0	.17	.15	.81	.74	.44	.20	.08				
7	0	.17	.30	.81	.67	.44	.12	.10				
8	0	.20	.23	.81	.61	.44	.12	.08				
9	0	.20	.34	.81	.61	.44	.10	.07				
10	0	.20	.34	.81	.61	.44	.08	.05				
11	0	.20	.34	.74	.61	.44	.12	.04				
12	0	.23	.30	.74	.61	.44	.17	.02				
13	0	.20	.55	.74	.55	.44	.23	0				
14	0	.20	.44	.74	.55	.44	.20	0				
15	0	.20	.39	.67	.55	.44	.17	0				
16	.02	.20	.34	.67	.55	.44	.15	0				
17	.01	.20	.34	.67	.49	.44	.12	0				
18	0	.20	.34	.74	.49	.44	.07	0				
19	0	.20	.34	.74	.49	.44	.04	.04				
20	0	.17	.34	.74	.49	.39	.04	.10				
21	0	.08	.34	.74	.49	.39	.03	.07				
22	0	.13	2.9	.74	.49	.39	.03	.04				
23	0	.13	1.8	.67	.49	.39	.03	.02				
24	0	.12	1.4	.61	.49	.39	.03	.02				
25	0	.12	2.4	.61	.49	.39	.03	.02				
26	.02	.11	4.0	.61	.44	.39	.01	.01				
27	.12	.11	3.9	.67	.44	.39	.01	0				
28	.15	.10	3.6	.61	.44	.39	0	0				
29	.17	.15	2.1	.61	.44	.39	0	0				
30	.17	.12	1.4	.55	------	.39	0	0				
31	.17	------	1.2	.49	------	.27	------	0	------			------
TOTAL	.83	4.96	31.28	22.71	15.53	12.92	3.37	.76	0	0	0	0
MEAN	.027	.17	1.01	.73	.54	.42	.11	.025	0	0	0	0
MAX	.17	.23	4.0	1.0	.74	.44	.30	.10	0	0	0	0
MIN	0	.08	.15	.49	.44	.27	0	0	0	0	0	0
AC-FT	1.7	9.8	62	45	31	26	6.7	1.5	0	0	0	0

CAL YR 1971 TOTAL 122.24 MEAN .33 MAX 4.0 MIN 0 AC-FT 242
WTR YR 1972 TOTAL 92.36 MEAN .25 MAX 4.0 MIN 0 AC-FT 183

PEAK DISCHARGE (BASE, 100 CFS).--No peak above base.

11015000 SWEETWATER RIVER NEAR DESCANSO, CALIF.--Continued

COMBINED DISCHARGE, IN CUBIC FEET PER SECOND, OF SWEETWATER RIVER AND SWEETWATER DIVERSION NEAR DESCANSO, CALIF., WATER YEAR OCTOBER 1971 TO SEPTEMBER 1972

DAY	OCT	NOV	DEC	JAN	FEB	MAR	APR	MAY	JUN	JUL	AUG	SEP
1	0	.23	.33	1.0	.49	.44	.17	.18	.09	.02		
2	0	.23	.35	.97	.49	.44	.23	.16	.08	.02		
3	0	.23	.51	.97	.49	.44	.27	.15	.08	.02		
4	0	.23	.87	.81	.49	.44	.30	.15	.07	.02		
5	0	.23	.35	.81	.74	.44	.38	.15	.07	.02		
6	0	.23	.33	.81	.74	.44	.42	.22	.07	.02		
7	0	.23	.60	.81	.67	.44	.34	.24	.07	.01		
8	0	.27	.34	.81	.61	.44	.34	.20	.07	.01		
9	0	.27	.34	.81	.61	.44	.28	.19	.08	.01		
10	0	.26	.34	.81	.61	.44	.28	.17	.08	.01		
11	0	.26	.34	.74	.61	.44	.38	.15	.07	.01		
12	0	.30	.30	.74	.61	.44	.49	.13	.07	.01		
13	0	.26	.55	.74	.55	.44	.49	.10	.07	.01		
14	0	.26	.44	.74	.55	.44	.40	.10	.06	.01		
15	0	.26	.39	.67	.55	.44	.35	.09	.06	.01		
16	.03	.26	.34	.67	.55	.44	.31	.10	.06	0		
17	.04	.26	.34	.67	.49	.44	.27	.10	.06	0		
18	.02	.26	.34	.74	.49	.44	.33	.10	.05	0		
19	0	.26	.34	.74	.49	.44	.36	.16	.05	0		
20	0	.26	.34	.74	.49	.39	.40	.30	.06	0		
21	0	.26	.34	.74	.49	.39	.33	.25	.06	0		
22	0	.27	2.9	.74	.49	.39	.29	.18	.06	0		
23	0	.25	1.8	.67	.49	.39	.27	.14	.06	0		
24	0	.24	1.4	.61	.49	.39	.27	.13	.06	0		
25	0	.26	2.4	.61	.49	.39	.27	.13	.05	0		
26	.03	.25	4.0	.61	.44	.39	.23	.12	.04	0		
27	.18	.26	3.9	.67	.44	.39	.21	.10	.04	0		
28	.24	.24	3.6	.61	.44	.39	.20	.10	.03	0		
29	.23	.33	2.1	.61	.44	.39	.20	.09	.03	0		
30	.23	.30	1.4	.55	------	.39	.18	.09	.03	0		
31	.23	------	1.2	.49	------	.27	------	.09	------	0		------
TOTAL	1.23	7.71	33.12	22.71	15.53	12.92	9.24	4.56	1.83	.21	0	0
MEAN	.040	.26	1.07	.73	.54	.42	.31	.15	.061	.007	0	0
MAX	.24	.33	4.0	1.0	.74	.44	.49	.30	.09	.02	0	0
MIN	0	.23	.30	.49	.44	.27	.17	.09	.03	0	0	0
AC-FT	2.4	15	66	45	31	26	18	9.0	3.6	.4	0	0

CAL YR 1971 TOTAL 276.45 MEAN .76 MAX 4.1 MIN 0 AC-FT 548
WTR YR 1972 TOTAL 109.06 MEAN .30 MAX 4.0 MIN 0 AC-FT 216

PEAK DISCHARGE (BASE, 100 CFS).--No peak above base.

11022500 SAN DIEGO RIVER NEAR SANTEE, CALIF.

LOCATION.--Lat 32°49'29", long 117°03'17", in Ex Mission San Diego Grant, San Diego County, on right bank in Mission Gorge, 0.2 mile upstream from left tributary, and 6 miles west of Santee.

DRAINAGE AREA.--377 sq mi.

PERIOD OF RECORD.--May 1912 to December 1915, March 1916 to current year. Monthly discharge only for some periods and yearly estimates only for 1924-25, published in WSP 1315-B.

GAGE.--Water-stage recorder and unfinished rubble dam control. Altitude of gage is 180 ft (from topographic map). Prior to Nov. 10, 1920, nonrecording gage at site 1.5 miles upstream at different datum. Nov. 10, 1920, to Dec. 1, 1954, water-stage recorder at present site at datum 1.0 ft higher.

AVERAGE DISCHARGE.--59 years, 22.5 cfs (16,300 acre-ft per year); median of yearly mean discharges, 4.8 cfs (3,500 acre-ft per year).

EXTREMES.--Current year: Maximum discharge, 230 cfs, occurred during period Dec. 26-28 (gage height, 3.75 ft, from peak-stage indicator); minimum daily, 0.94 cfs Oct. 10.
Period of record: Maximum discharge, 70,200 cfs Jan. 27, 1916 (gage height, 25.1 ft, site and datum then in use), based on slope-conveyance computation; no flow at times in most years.

REMARKS.--Records good except those of no gage-height record, which are poor. Flow regulated by Cuyamaca Reservoir (capacity, 11,540 acre-ft), El Capitan Reservoir (capacity, 112,810 acre-ft), and San Vicente Reservoir (capacity, 90,230 acre-ft). Diversions by city of San Diego for municipal supply and by Helix Irrigation District. AVERAGE DISCHARGE represents flow to ocean during period of record, regardless of upstream development. Records of suspended-sediment discharge for the current year are published in Part 2 of this report.

DISCHARGE, IN CUBIC FEET PER SECOND, WATER YEAR OCTOBER 1971 TO SEPTEMBER 1972

DAY	OCT	NOV	DEC	JAN	FEB	MAR	APR	MAY	JUN	JUL	AUG	SEP
1	2.1	4.8	4.0	8.0	8.6	5.8	5.6	2.4	1.5	3.2	1.1	2.2
2	2.4	4.9	3.9	7.0	8.3	5.7	5.7	2.6	1.8	3.7	1.1	2.7
3	2.2	4.9	7.3	7.0	7.7	5.3	5.6	2.4	1.5	3.2	1.1	3.2
4	2.4	4.8	20	6.0	7.7	5.1	5.1	2.2	1.6	3.0	1.1	3.4
5	1.6	4.6	8.1	6.0	8.4	5.3	4.1	2.2	3.2	2.8	1.4	3.2
6	1.5	4.5	5.3	6.0	12	5.0	3.8	2.2	3.4	2.6	2.2	3.2
7	1.1	4.5	6.8	6.0	9.8	4.7	3.6	2.6	7.3	2.1	2.6	6.4
8	.97	4.6	6.4	6.0	7.9	5.7	5.0	3.0	4.1	1.8	2.1	4.9
9	.97	4.2	4.9	6.4	8.2	5.5	11	2.6	3.7	2.1	1.5	4.4
10	.94	4.2	4.7	6.6	7.9	5.9	9.2	2.4	4.6	2.6	1.3	4.8
11	1.4	4.3	4.7	6.3	7.6	6.3	6.5	2.2	5.9	2.6	1.3	4.1
12	1.2	4.4	4.5	6.4	7.6	5.9	5.4	2.4	3.5	2.6	1.2	3.7
13	1.1	4.2	6.8	6.1	7.7	6.4	4.5	2.6	3.5	2.2	1.3	3.8
14	1.5	4.1	7.7	6.1	7.5	6.2	5.0	2.6	3.0	2.1	1.8	3.9
15	1.9	3.9	5.6	6.1	6.6	7.3	5.0	2.9	3.0	2.1	2.1	3.8
16	19	4.1	6.0	6.2	6.4	7.0	4.0	2.6	3.0	2.2	1.9	3.6
17	36	3.8	5.5	6.1	6.9	7.0	3.3	2.4	3.2	2.4	1.5	3.6
18	34	3.9	5.0	5.7	6.8	7.3	3.0	2.1	3.5	1.9	1.5	3.8
19	6.8	3.9	5.0	5.5	7.0	7.7	2.8	2.1	3.5	1.8	1.5	3.5
20	4.3	3.6	5.0	5.7	7.1	7.7	2.7	6.4	3.4	1.4	1.9	3.0
21	3.4	3.7	5.0	6.6	6.8	7.3	2.5	7.1	12	1.5	1.8	3.2
22	2.8	3.7	15	6.5	7.7	7.1	2.3	3.8	4.9	1.6	1.3	3.2
23	3.2	3.7	35	7.0	7.6	8.0	2.3	3.4	5.1	2.2	1.1	2.9
24	3.7	4.0	20	6.1	7.5	8.5	2.3	2.9	6.2	2.7	1.1	3.0
25	6.6	4.2	80	8.9	7.4	8.3	2.3	2.7	5.9	2.4	1.1	3.2
26	4.7	4.6	120	7.4	7.4	8.5	2.4	2.7	5.8	1.5	1.4	2.9
27	3.0	4.6	40	6.6	7.5	8.0	2.5	2.1	5.1	1.3	2.4	2.7
28	3.3	4.7	90	6.3	5.7	7.1	2.2	2.1	4.2	1.3	2.4	2.4
29	4.2	4.8	25	6.5	5.5	7.4	2.2	2.6	3.2	1.2	2.1	2.2
30	4.7	4.4	10	9.3	------	6.8	2.2	2.6	3.0	1.1	2.1	2.4
31	4.8	------	9.0	9.0	------	6.2	------	1.5	------	1.1	1.9	------
TOTAL	167.78	128.6	576.2	205.4	220.8	206.0	124.1	86.4	123.6	66.3	50.2	103.3
MEAN	5.41	4.29	18.6	6.63	7.61	6.65	4.14	2.79	4.12	2.14	1.62	3.44
MAX	36	4.9	120	9.3	12	8.5	11	7.1	12	3.7	2.6	6.4
MIN	.94	3.6	3.9	5.5	5.5	4.7	2.2	1.5	1.5	1.1	1.1	2.2
AC-FT	333	255	1,140	407	438	409	246	171	245	132	100	205

CAL YR 1971 TOTAL 2,065.37 MEAN 5.66 MAX 120 MIN .36 AC-FT 4,100
WTR YR 1972 TOTAL 2,058.68 MEAN 5.62 MAX 120 MIN .94 AC-FT 4,080

NOTE.--No gage-height record Dec. 17 to Jan. 9.

11023320 POMERADO CREEK AT POWAY ROAD, NEAR POWAY, CALIF.

LOCATION.--Lat 32°57'07", long 117°03'48", in NE¼SW¼SW¼ sec.14, T.14 S., R.2 W., San Diego County, on right bank at Poway Road, 0.2 mile upstream from mouth, and 2.0 miles southwest of Poway.

DRAINAGE AREA.--4.14 sq mi.

PERIOD OF RECORD.--October 1970 to current year.

GAGE.--Water-stage recorder. Altitude of gage is 440 ft (from topographic map).

EXTREMES.--Current year: Maximum discharge, 31 cfs Dec. 27 (gage height, 3.26 ft); no flow for many days.
Period of record: Maximum discharge, 39 cfs Dec. 21, 1970 (gage height, 3.11 ft); no flow for many days in each year.

REMARKS.--Records good. No regulation or diversion.

DISCHARGE, IN CUBIC FEET PER SECOND, WATER YEAR OCTOBER 1971 TO SEPTEMBER 1972

DAY	OCT	NOV	DEC	JAN	FEB	MAR	APR	MAY	JUN	JUL	AUG	SEP
1	0	0	0	.07	.01	0	0	0	0			0
2	0	0	0	.06	0	0	0	0	0			0
3	0	0	.10	.05	0	0	0	0	0			.07
4	0	0	.22	.03	0	0	0	0	0			.01
5	0	0	0	.04	.06	0	0	0	.03			0
6	0	0	0	.06	.15	.02	0	0	.15			.11
7	0	0	.08	.05	.01	0	0	0	.04			.02
8	0	0	0	.05	.01	0	0	0	.03			0
9	0	0	0	.04	.02	0	0	0	.09			0
10	0	0	0	.05	0	0	0	0	.13			0
11	0	0	0	.04	0	0	0	0	.02			0
12	0	.04	0	.04	0	.01	0	0	0			0
13	0	0	.20	.04	.03	.03	.04	0	0			0
14	0	0	0	.04	.03	.01	0	0	0			0
15	0	.07	0	.02	0	0	0	0	0			0
16	.20	.01	0	.03	0	0	0	0	0			0
17	2.5	0	0	.03	0	0	.01	0	0			0
18	.06	0	0	.05	0	0	0	0	0			0
19	0	0	0	.03	0	0	0	.11	0			0
20	0	0	0	.03	0	0	0	.74	.08			0
21	0	0	0	.03	0	0	0	.04	.03			0
22	0	0	1.4	.06	0	0	0	.01	0			0
23	0	0	.33	.03	0	0	0	0	0			0
24	0	0	2.0	.03	0	0	0	0	0			0
25	.10	0	3.4	.01	0	0	0	0	0			0
26	0	0	1.3	.01	0	0	0	0	0			0
27	0	0	4.0	0	0	.03	0	0	0			0
28	0	0	2.9	0	.02	0	0	0	0			0
29	0	.18	.27	.01	0	0	0	0	0			0
30	0	0	.12	.01	------	0	0	0	0			0
31	0	------	.08	.01	------	0	------	0	------			------
TOTAL	2.86	.30	16.40	1.05	.34	.10	.05	.90	.60	0	0	.21
MEAN	.092	.010	.53	.034	.012	.003	.002	.029	.020	0	0	.007
MAX	2.5	.18	4.0	.07	.15	.03	.04	.74	.15	0	0	.11
MIN	0	0	0	0	0	0	0	0	0	0	0	0
AC-FT	5.7	.6	33	2.1	.7	.2	.1	1.8	1.2	0	0	.4

CAL YR 1971 TOTAL 48.02 MEAN .13 MAX 4.0 MIN 0 AC-FT 95
WTR YR 1972 TOTAL 22.81 MEAN .062 MAX 4.0 MIN 0 AC-FT 45

11023330 LOS PENASQUITOS CREEK BELOW POWAY CREEK, NEAR POWAY, CALIF.

LOCATION.--Lat 32°56'58", long 117°04'08", in NW¼NE¼NE¼ sec.22, T.14 S., R.2 W., San Diego County, on right bank at Cobblestone Creek Road, 0.2 mile downstream from confluence of Poway and Pomerado Creeks, and 2.0 miles southwest of Poway.

DRAINAGE AREA.--31.2 sq mi.

PERIOD OF RECORD.--October 1970 to current year.

GAGE.--Water-stage recorder and rain-gage attachment. Altitude of gage is 415 ft (from topographic map).

EXTREMES.--Current year: Maximum discharge, 105 cfs Dec. 27 (gage height, 6.10 ft); no flow many days.
Period of record: Maximum discharge, 105 cfs Dec. 27, 1971 (gage height, 6.10 ft); no flow for parts of each year.

REMARKS.--Records good. Flow partly regulated by small conservation reservoirs.

DISCHARGE, IN CUBIC FEET PER SECOND, WATER YEAR OCTOBER 1971 TO SEPTEMBER 1972

DAY	OCT	NOV	DEC	JAN	FEB	MAR	APR	MAY	JUN	JUL	AUG	SEP
1	0	.03	.05	.34	.09	.22	.02	.02	0	.01		
2	0	.03	.02	.28	.10	.13	.02	.02	0	0		
3	0	.03	.78	.26	.08	.10	.02	.02	0	0		
4	0	.03	2.6	.18	.06	.09	.02	.03	0	0		
5	0	.03	.58	.18	.14	.07	.02	.03	0	0		
6	0	.03	.58	.18	.78	.07	.02	.03	.16	0		
7	0	.03	1.1	.16	.22	.10	.02	.03	.10	0		
8	0	.03	.28	.14	.13	.10	.01	.04	.04	0		
9	0	.03	.08	.13	.10	.24	.02	.04	.14	0		
10	0	.03	.06	.13	.10	.16	.02	.04	.22	0		
11	0	.03	.04	.16	.08	.14	.02	.03	.03	0		
12	0	.03	.03	.22	.12	.13	.02	.03	.01	0		
13	0	.03	.90	.16	.12	.07	.02	.03	.01	0		
14	0	.03	.10	.10	.08	.06	.01	.03	.01	0		
15	0	.04	.05	.09	.07	.05	.01	.03	.01	0		
16	.79	.04	.03	.09	.06	.05	.01	.02	.01	0		
17	4.4	.04	.02	.08	.07	.04	.01	.03	.01	0		
18	.10	.04	.03	.08	.06	.05	.01	.03	.01	0		
19	.02	.04	.02	.08	.08	.06	0	.06	.01	0		
20	.01	.04	.01	.31	.09	.05	0	1.0	.02	0		
21	.01	.04	.01	.18	.08	.04	.01	.04	.03	0		
22	.02	.04	5.8	.13	.13	.04	.01	.01	.01	0		
23	.02	.04	2.7	.13	.18	.04	.01	.01	.01	0		
24	.04	.05	6.3	.13	.14	.03	.01	0	.01	0		
25	.14	.14	21	.10	.08	.03	.01	0	.01	0		
26	.04	.24	10	.09	.10	.03	.01	0	.01	0		
27	.03	.26	24	.09	.10	.02	.01	0	0	0		
28	.03	.24	25	.10	.10	.02	.01	0	.01	0		
29	.02	.51	2.7	.12	.09	.02	.01	0	.01	0		
30	.02	.16	.58	.10	------	.02	.02	0	.01	0		
31	.03	------	.40	.09	------	.02	------	0	------	0		------
TOTAL	5.72	2.38	105.85	4.61	3.63	2.29	.41	1.65	.90	.01	0	0
MEAN	.18	.079	3.41	.15	.13	.074	.014	.053	.030	.0003	0	0
MAX	4.4	.51	25	.34	.78	.24	.02	1.0	.22	.01	0	0
MIN	0	.03	.01	.08	.06	.02	0	0	0	0	0	0
AC-FT	11	4.7	210	9.1	7.2	4.5	.8	3.3	1.8	.02	0	0
(a)	1.2	.18	3.74	0	.16	0	.01	.42	.56	0	0	.2

CAL YR 1971 TOTAL 178.95 MEAN .49 MAX 25 MIN 0 AC-FT 355
WTR YR 1972 TOTAL 127.45 MEAN .35 MAX 25 MIN 0 AC-FT 253

a Precipitation, in inches.

11023340 LOS PENASQUITOS CREEK NEAR POWAY, CALIF.

LOCATION.--Lat 32°56'35", long 117°07'15", in Los Penasquitos Grant, San Diego County, on left bank 1.0 mile downstream from Cypress Creek, and 5.5 miles southwest of Poway.

DRAINAGE AREA.--42.1 sq mi.

PERIOD OF RECORD.--October 1964 to current year.

GAGE.--Water-stage recorder. Altitude of gage is 260 ft (from topographic map).

AVERAGE DISCHARGE.--8 years, 3.80 cfs (2,750 acre-ft per year).

EXTREMES.--Current year: Maximum discharge, 49 cfs Dec. 27 (gage height, 2.51 ft); no flow July 1.
Period of record: Maximum discharge, 2,100 cfs Dec. 6, 1966 (gage height, 6.90 ft, in gage well, 7.70 ft, from profile of floodmarks), from rating curve extended above 400 cfs on basis of slope-area measurement at gage height 6.23 ft in gage well, 7.40 ft, from outside gage; no flow May 16, 17, 1968, July 1, 1972.

REMARKS.--Records fair. Flow partly regulated by several conservation reservoirs above station. Pumping from wells along stream for irrigation. Flow augmented by reclaimed water from Poway area.

DISCHARGE, IN CUBIC FEET PER SECOND, WATER YEAR OCTOBER 1971 TO SEPTEMBER 1972

DAY	OCT	NOV	DEC	JAN	FEB	MAR	APR	MAY	JUN	JUL	AUG	SEP
1	2.0	1.7	1.5	3.4	1.5	1.9	2.8	2.4	1.9	0	2.8	.27
2	2.0	1.7	1.5	3.0	1.5	1.7	2.9	2.1	1.7	.01	2.7	.22
3	2.0	1.6	1.8	3.0	1.5	1.7	3.1	1.9	1.8	.07	2.6	.21
4	2.0	1.6	2.6	2.6	1.5	1.9	2.3	1.9	1.8	.11	2.4	.25
5	2.0	1.7	1.7	2.5	1.5	1.8	.76	1.9	1.9	.14	2.1	.24
6	2.0	1.7	1.8	2.6	1.5	1.9	6.3	1.9	2.5	.15	1.9	.29
7	2.0	1.7	1.9	2.8	1.5	1.8	3.9	1.9	2.3	.69	1.5	.51
8	2.0	1.7	1.9	2.5	1.5	1.8	3.5	2.1	2.0	.65	1.1	.56
9	2.0	1.7	1.5	2.5	1.9	1.9	2.4	2.0	2.2	.65	1.0	.36
10	2.0	1.7	1.6	2.6	2.0	2.0	1.9	2.0	2.6	.64	1.3	.21
11	2.0	1.7	1.4	2.5	2.1	2.0	.45	2.0	2.1	.52	1.1	.14
12	2.0	1.7	1.6	2.5	2.0	2.0	5.6	2.1	2.0	.57	1.1	.13
13	2.0	1.7	2.1	2.5	1.9	2.2	1.0	2.2	2.1	.56	1.3	.44
14	2.0	1.7	1.9	2.5	2.0	2.1	4.7	2.3	2.0	.61	1.2	.51
15	2.0	2.5	1.6	2.4	2.0	2.1	3.1	2.2	2.0	.52	1.1	.32
16	5.0	2.2	1.6	2.4	1.9	2.1	2.1	2.4	1.9	.36	1.1	.48
17	7.0	1.5	1.6	2.4	1.7	2.6	1.6	1.7	2.1	.47	1.1	.54
18	4.0	1.6	1.5	2.3	1.9	2.3	3.0	1.9	2.1	.43	1.1	.47
19	2.2	1.6	1.6	2.0	1.8	2.3	3.0	2.1	2.0	.41	1.2	.46
20	1.9	1.6	1.6	1.6	1.7	2.5	1.7	5.3	3.0	.42	1.0	.42
21	1.8	1.5	1.6	1.6	1.7	2.5	1.7	2.5	2.9	.40	1.2	.36
22	1.8	1.6	5.4	1.6	1.9	2.4	1.8	2.1	2.1	.39	1.2	.32
23	1.7	1.6	7.4	1.6	1.9	2.4	1.9	2.4	2.0	.94	1.1	.32
24	1.7	1.5	4.7	1.6	1.9	2.5	1.9	2.2	2.0	1.3	.87	.45
25	2.5	1.5	17	1.6	2.0	2.5	2.0	2.1	2.7	1.2	.55	.49
26	1.8	1.4	15	1.6	1.8	2.5	1.8	1.9	2.0	1.5	.35	.45
27	1.6	1.4	15	1.6	1.8	2.6	1.9	1.9	2.1	1.6	.32	.45
28	1.5	1.5	18	1.6	1.8	2.5	2.1	1.9	1.8	2.1	.33	.32
29	1.5	1.9	15	1.6	1.7	2.5	2.0	1.8	.42	3.5	.36	.37
30	1.5	1.7	11	1.6	------	2.3	2.3	2.0	.17	3.3	.51	.30
31	1.6	------	7.3	1.6	------	2.5	------	1.9	------	3.0	.29	------
TOTAL	69.1	50.2	151.7	68.2	51.4	67.8	75.51	67.0	60.19	27.21	37.78	10.86
MEAN	2.23	1.67	4.89	2.20	1.77	2.19	2.52	2.16	2.01	.88	1.22	.36
MAX	7.0	2.5	18	3.4	2.1	2.6	6.3	5.3	3.0	3.5	2.8	.56
MIN	1.5	1.4	1.4	1.6	1.5	1.7	.45	1.7	.17	0	.29	.13
AC-FT	137	100	301	135	102	134	150	133	119	54	75	22

CAL YR 1971 TOTAL 825.40 MEAN 2.26 MAX 18 MIN 1.2 AC-FT 1,640
WTR YR 1972 TOTAL 736.95 MEAN 2.01 MAX 18 MIN 0 AC-FT 1,460

PEAK DISCHARGE (BASE, 60 CFS).--No peak above base.

11025500 SANTA YSABEL CREEK NEAR RAMONA, CALIF.

LOCATION.--Lat 33°06'25", long 116°51'55", in SW¼NW¼NE¼ sec.27, T.12 S., R.1 E., San Diego County, on left bank 1.6 miles downstream from Temescal Creek, and 4.5 miles north of Ramona.

DRAINAGE AREA.--112 sq mi.

PERIOD OF RECORD.--February 1912 to February 1923, October 1943 to current year. Monthly discharge only for February 1912, published in WSP 1315-B.

GAGE.--Water-stage recorder and concrete cutoff wall, repaired at times. Datum of gage is 847.88 ft above mean sea level (levels by city of San Diego Water Department). See WSP 1315-A for history of changes prior to Feb. 3, 1923.

EXTREMES.--Current year: Maximum discharge, not determined, Dec. 28; no flow for many days.
Period of record: Maximum discharge, 28,400 cfs Jan. 27, 1916 (gage height, 14.0 ft, datum then in use), from rating curve extended above 1,500 cfs based on slope-conveyance computation of maximum flow; no flow at times in some years.

REMARKS.--Records good except those for Dec. 28-30, which are fair. Flow regulated since July 1954 by Sutherland Reservoir (see sta 11024000). Some small diversions above station.

DISCHARGE, IN CUBIC FEET PER SECOND, WATER YEAR OCTOBER 1971 TO SEPTEMBER 1972

DAY	OCT	NOV	DEC	JAN	FEB	MAR	APR	MAY	JUN	JUL	AUG	SEP
1	.01	.01	.02	.48	.07	.06	.09	.01	0	0	0	0
2	.01	.01	.04	.34	.05	.06	.09	.01	0	0	0	0
3	0	.01	.02	.17	.06	.07	.09	.01	0	0	0	0
4	0	.01	.02	.13	.06	.07	.09	.01	0	0	0	0
5	0	.01	.01	.13	.15	.07	.08	.01	.01	0	0	0
6	0	.01	.02	.09	.08	.07	.07	.01	.01	.01	0	0
7	0	.02	.03	.06	.07	.08	.07	.01	.01	.01	0	.01
8	0	.04	.01	.06	.07	.08	.06	.01	.01	.01	.01	.01
9	0	.04	.01	.06	.08	.08	.05	.01	.01	.01	.01	.01
10	0	.04	.02	.06	.08	.08	.05	.01	.01	.01	.01	.01
11	0	.04	.02	.06	.07	.08	.07	.01	.01	.01	.01	.01
12	0	.06	.04	.06	.07	.08	.07	.01	0	.01	.02	0
13	0	.06	.06	.06	.05	.09	.17	.01	0	0	.02	0
14	0	.06	.02	.06	.06	.11	.10	0	0	0	.02	0
15	0	.06	.02	.06	.06	.10	.06	0	0	.01	.01	0
16	0	.03	.02	.06	.08	.10	.04	.01	0	0	0	0
17	.02	.06	.02	.06	.08	.11	.06	.01	.01	0	0	0
18	.01	.03	.04	.06	.08	.17	.09	.01	.01	0	0	.01
19	.01	.01	.04	.06	.07	.16	.17	.01	.01	.01	.01	0
20	.01	.04	.04	.09	.07	.16	.14	.01	.02	.01	0	0
21	.01	.04	.04	.06	.06	.16	.10	.01	.01	.01	0	0
22	.01	.03	.10	.06	.05	.15	.08	.01	.01	.01	0	0
23	.01	.02	.13	.06	.06	.16	.06	.01	.01	.01	0	0
24	.01	.02	.25	.06	.06	.15	.04	.01	.01	.01	0	0
25	.01	.02	.45	.06	.06	.16	.04	.01	.01	.01	0	0
26	.01	.04	.44	.06	.06	.18	.02	.01	.01	0	0	0
27	.01	.04	.57	.06	.06	.17	.01	.01	.01	0	0	0
28	.01	.04	1.9	.09	.04	.16	.01	.01	0	0	0	0
29	.01	.03	4.0	.09	.06	.17	.01	.01	.01	0	.01	0
30	.01	.02	1.4	.06	------	.14	.01	0	0	0	.02	0
31	.01	------	.57	.06	------	.11	------	0	------	0	0	------
TOTAL	.18	.95	10.37	2.93	1.97	3.59	2.09	.27	.20	.15	.15	.06
MEAN	.006	.032	.33	.095	.068	.12	.070	.009	.007	.005	.005	.002
MAX	.02	.06	4.0	.48	.15	.18	.17	.01	.02	.01	.02	.01
MIN	0	.01	.01	.06	.04	.06	.01	0	0	0	0	0
AC-FT	.4	1.9	21	5.8	3.9	7.1	4.2	.5	.4	.3	.3	.1

CAL YR 1971 TOTAL 157.32 MEAN .43 MAX 12 MIN 0 AC-FT 312
WTR YR 1972 TOTAL 22.91 MEAN .063 MAX 4.0 MIN 0 AC-FT 45

NOTE.--No gage-height record Dec. 28-30.

11026000 SANTA YSABEL CREEK NEAR SAN PASQUAL, CALIF.

LOCATION.--Lat 33°05'10", long 116°54'56", in NE¼NW¼SE¼ sec.31, T.12 S., R.1 E., San Diego County, on left bank 1.1 miles downstream from Clevenger Canyon, and 2 miles east of San Pasqual.

DRAINAGE AREA.--128 sq mi.

PERIOD OF RECORD.--December 1905 to September 1910 and May 1911 to September 1912 (published as "near Escondido"), April 1947 to November 1955 (irrigation seasons only), April 1956 to current year. Records for October to December 1910, published in WSP 447, have been found to be in error and should not be used.

GAGE.--Water-stage recorder. Concrete control since April 1947. Altitude of gage is 510 ft (from topographic map). Dec. 17, 1905, to Sept. 30, 1912, nonrecording gage at site 0.2 mile downstream at different datum.

EXTREMES.--Current year: Maximum discharge, not determined, Dec. 28; no flow Oct. 1 to Dec. 21, May 1 to Sept. 30.
1905-12, 1947 to current year: Maximum discharge observed, 8,000 cfs Mar. 24, 1906 (gage height, 6.3 ft, site and datum then in use); no flow at times in most years.

REMARKS.--Records good except those for Dec. 22-29, which are poor. Flow regulated since July 1954 by Sutherland Reservoir (see sta 11024000). Small diversion above station.

DISCHARGE, IN CUBIC FEET PER SECOND, WATER YEAR OCTOBER 1971 TO SEPTEMBER 1972

DAY	OCT	NOV	DEC	JAN	FEB	MAR	APR	MAY	JUN	JUL	AUG	SEP
1			0	.04	.11	.17	.05					
2			0	.04	.09	.16	.05					
3			0	.04	.09	.16	.04					
4			0	.04	.09	.15	.04					
5			0	.04	.12	.15	.03					
6			0	.04	.13	.15	.03					
7			0	.04	.13	.16	.03					
8			0	.04	.12	.17	.03					
9			0	.04	.12	.18	.03					
10			0	.04	.12	.19	.03					
11			0	.04	.11	.18	.03					
12			0	.04	.11	.18	.03					
13			0	.04	.11	.19	.03					
14			0	.04	.12	.20	.02					
15			0	.04	.12	.20	.02					
16			0	.04	.12	.21	.02					
17			0	.04	.12	.21	.02					
18			0	.04	.13	.21	.02					
19			0	.04	.13	.22	.02					
20			0	.05	.13	.21	.02					
21			0	.07	.14	.19	.02					
22			.20	.08	.15	.19	.02					
23			.30	.09	.16	.18	.02					
24			.40	.10	.16	.18	.02					
25			.60	.09	.16	.17	.01					
26			.60	.10	.15	.18	.01					
27			.80	.10	.15	.12	.01					
28			3.0	.10	.15	.08	.01					
29			1.0	.11	.16	.08	.01					
30			.05	.11	------	.08	.01					
31		------	.04	.11	------	.06	------		------			------
TOTAL	0	0	6.99	1.87	3.70	5.16	.73	0	0	0	0	0
MEAN	0	0	.23	.060	.13	.17	.024	0	0	0	0	0
MAX	0	0	3.0	.11	.16	.22	.05	0	0	0	0	0
MIN	0	0	0	.04	.09	.06	.01	0	0	0	0	0
AC-FT	0	0	14	3.7	7.3	10	1.5	0	0	0	0	0

CAL YR 1971 TOTAL 172.59 MEAN .47 MAX 12 MIN 0 AC-FT 342
WTR YR 1972 TOTAL 18.45 MEAN .050 MAX 3.0 MIN 0 AC-FT 37

NOTE.--No gage-height record Dec. 1 to Jan. 3.

11027000 GUEJITO CREEK NEAR SAN PASQUAL, CALIF.

LOCATION.--Lat 33°06'57", long 116°57'08", in NW¼NW¼SE¼ sec.23, T.12 S., R.1 W., San Diego County, on left bank 0.3 mile upstream from Rockwood Canyon Creek, and 1.8 miles north of San Pasqual.

DRAINAGE AREA.--22.5 sq mi.

PERIOD OF RECORD.--December 1946 to current year.

GAGE.--Water-stage recorder and concrete control. Altitude of gage is 560 ft (from topographic map).

AVERAGE DISCHARGE.--25 years (1947-72), 1.49 cfs (1,080 acre-ft per year); median of yearly mean discharges, 0.4 cfs (290 acre-ft per year).

EXTREMES.--Current year: Maximum discharge, 16 cfs Dec. 27 (gage height, 2.14 ft); no flow Nov. 2-14, July 18 to Sept. 5, Sept. 7-30.
Period of record: Maximum discharge, 2,920 cfs Dec. 6, 1966 (gage height, 6.78 ft), from rating curve extended above 440 cfs on basis of slope-area measurements at gage heights 5.83 and 6.30 ft; no flow at times in most years.

REMARKS.--Records good. No regulation above station. Diversion for irrigation 0.2 mile upstream.

DISCHARGE, IN CUBIC FEET PER SECOND, WATER YEAR OCTOBER 1971 TO SEPTEMBER 1972

DAY	OCT	NOV	DEC	JAN	FEB	MAR	APR	MAY	JUN	JUL	AUG	SEP
1	.01	.01	.01	.60	.30	.30	.10	.04	.02	.01		0
2	.01	0	.01	.53	.30	.28	.09	.04	.02	.01		0
3	.01	0	.01	.50	.27	.26	.09	.03	.02	.01		0
4	.01	0	.02	.34	.27	.25	.09	.03	.02	.01		0
5	.01	0	.01	.30	.53	.24	.08	.03	.03	.01		0
6	.01	0	.01	.36	.73	.22	.08	.04	.02	.01		.01
7	.01	0	.03	.36	.50	.22	.07	.03	.02	.01		0
8	.01	0	.02	.39	.41	.23	.07	.03	.03	.01		0
9	.01	0	.02	.39	.40	.25	.07	.03	.03	.01		0
10	.01	0	.02	.36	.37	.24	.07	.03	.02	.01		0
11	.01	0	.03	.36	.36	.22	.07	.03	.02	.01		0
12	.01	0	.03	.36	.33	.22	.07	.03	.02	.01		0
13	.01	0	.13	.36	.30	.21	.11	.03	.02	.01		0
14	.01	0	.13	.36	.30	.22	.11	.03	.01	.01		0
15	.01	.01	.10	.30	.32	.22	.08	.03	.01	.01		0
16	.01	.01	.10	.28	.31	.20	.07	.03	.01	.01		0
17	.01	.01	.09	.30	.31	.20	.07	.03	.01	.01		0
18	.01	.01	.09	.32	.31	.20	.07	.03	.01	0		0
19	.01	.01	.09	.32	.30	.20	.07	.03	.01	0		0
20	.01	.01	.10	.32	.29	.19	.09	.04	.01	0.		0
21	.01	.01	.12	.34	.29	.18	.08	.03	.01	0		0
22	.01	.01	.61	.36	.31	.17	.07	.03	.01	0		0
23	.01	.01	1.3	.36	.31	.17	.07	.03	.01	0		0
24	.01	.01	1.1	.34	.32	.16	.06	.03	.01	0		0
25	.01	.01	4.0	.32	.31	.15	.06	.03	.01	0		0
26	.01	.01	4.0	.34	.30	.15	.05	.03	.01	0		0
27	.01	.01	3.0	.34	.27	.15	.05	.02	.01	0		0
28	.01	.01	6.1	.32	.27	.15	.04	.02	.01	0		0
29	.01	.01	2.4	.34	.27	.14	.04	.02	.01	0		0
30	.01	.01	1.1	.34	------	.14	.04	.02	.01	0		0
31	.01	------	.78	.32	------	.12	------	.02	------	0		------
TOTAL	.31	.17	25.56	11.13	9.86	6.25	2.18	.92	.46	.17	0	.01
MEAN	.010	.006	.82	.36	.34	.20	.073	.030	.015	.006	0	.0003
MAX	.01	.01	6.1	.60	.73	.30	.11	.04	.03	.01	0	.01
MIN	.01	0	.01	.28	.27	.12	.04	.02	.01	0	0	0
AC-FT	.6	.3	51	22	20	12	4.3	1.8	.9	.3	0	.02

CAL YR 1971 TOTAL 130.77 MEAN .36 MAX 10 MIN 0 AC-FT 259
WTR YR 1972 TOTAL 57.02 MEAN .16 MAX 6.1 MIN 0 AC-FT 113

PEAK DISCHARGE (BASE, 30 CFS).--No peak above base.

11028500 SANTA MARIA CREEK NEAR RAMONA, CALIF.

LOCATION.--Lat 33°03'08", long 116°56'41", in SE¼SE¼SE¼ sec.11, T.13 S., R.1 W., San Diego County, on left bank 3.8 miles northwest of Ramona, and 4.6 miles upstream from mouth.

DRAINAGE AREA.--57.6 sq mi.

PERIOD OF RECORD.--November 1912 to September 1920, October 1946 to current year.

GAGE.--Water-stage recorder. Concrete control since October 1946. Datum of gage is 1,294.44 ft above mean sea level. Prior to Oct. 1, 1946, at datum 1.78 ft lower.

AVERAGE DISCHARGE.--33 years (1913-20, 1946-72), 3.54 cfs (2,560 acre-ft per year); median of yearly mean discharges, 0.10 cfs (72 acre-ft per year).

EXTREMES.--Current year: Maximum discharge, 0.01 cfs for many days (gage height, 0.93 ft); no flow for many days.
Period of record: Maximum discharge, 7,140 cfs Jan. 27, 1916 (gage height, 14.1 ft, from floodmarks, present datum), from rating curve extended above 600 cfs on basis of slope-area measurement of maximum flow; no flow for several months in each year.

REMARKS.--Records good. No regulation above station.

DISCHARGE, IN CUBIC FEET PER SECOND, WATER YEAR OCTOBER 1971 TO SEPTEMBER 1972

DAY	OCT	NOV	DEC	JAN	FEB	MAR	APR	MAY	JUN	JUL	AUG	SEP
1					0	.01						
2					0	.01						
3					0	.01						
4					0	.01						
5					.01	0						
6					.01	.01						
7					.01	.01						
8					.01	.01						
9					.01	.01						
10					0	0						
11					0	.01						
12					0	.01						
13					.01	.01						
14					.01	.01						
15					.01	.01						
16					.01	.01						
17					.01	0						
18					.01	.01						
19					.01	.01						
20					.01	.01						
21					.01	0						
22					.01	.01						
23					.01	.01						
24					0	0						
25					.01	0						
26					.01	0						
27					0	0						
28					0	0						
29					.01	0						
30					------	0						
31		------			------	0	------		------			------
TOTAL	0	0	0	0	.19	.19	0	0	0	0	0	0
MEAN	0	0	0	0	.007	.006	0	0	0	0	0	0
MAX	0	0	0	0	.01	.01	0	0	0	0	0	0
MIN	0	0	0	0	0	0	0	0	0	0	0	0
AC-FT	0	0	0	0	.4	.4	0	0	0	0	0	0

CAL YR 1971 TOTAL 7.28 MEAN .020 MAX 1.8 MIN 0 AC-FT 14
WTR YR 1972 TOTAL 0.38 MEAN .0010 MAX .01 MIN 0 AC-FT .8

PEAK DISCHARGE (BASE, 20 CFS).--No peak above base.

11031500 AGUA CALIENTE CREEK NEAR WARNER SPRINGS, CALIF.

LOCATION.--Lat 33°17'19", long 116°39'11", in San Jose del Valle Grant, San Diego County, on downstream end of right pier of bridge on State Highway 79, 1.2 miles upstream from Canada Verde Creek, and 1.2 miles northwest of Warner Springs.

DRAINAGE AREA.--19.0 sq mi.

PERIOD OF RECORD.--February 1961 to current year.

GAGE.--Water-stage recorder. Altitude of gage is 2,950 ft (from topographic map). Prior to Jan. 29, 1966, at site 120 ft upstream at same datum, used as supplementary gage since Dec. 12, 1968.

AVERAGE DISCHARGE.--11 years, 1.20 cfs (869 acre-ft per year); median of yearly mean discharges, 0.3 cfs (220 acre-ft per year).

EXTREMES.--Current year: Maximum discharge, 30 cfs Dec. 25 (gage height, 2.60 ft); no flow Oct. 1 to Dec. 24, Jan. 4 to Sept. 30.
Period of record: Maximum discharge, 1,200 cfs Dec. 6, 1966 (gage height, 5.18 ft), from rating curve extended above 240 cfs; no flow for much of each year.

REMARKS.--Records good. No regulation or diversion above station.

DISCHARGE, IN CUBIC FEET PER SECOND, WATER YEAR OCTOBER 1971 TO SEPTEMBER 1972

DAY	OCT	NOV	DEC	JAN	FEB	MAR	APR	MAY	JUN	JUL	AUG	SEP
1			0	.72								
2			0	.45								
3			0	.05								
4			0	0								
5			0	0								
6			0	0								
7			0	0								
8			0	0								
9			0	0								
10			0	0								
11			0	0								
12			0	0								
13			0	0								
14			0	0								
15			0	0								
16			0	0								
17			0	0								
18			0	0								
19			0	0								
20			0	0								
21			0	0								
22			0	0								
23			0	0								
24			0	0								
25			15	0								
26			13	0								
27			3.6	0								
28			3.4	0								
29			2.2	0								
30			1.9	0	------							
31		------	1.1	0	------		------		------			------
TOTAL	0	0	40.2	1.22	0	0	0	0	0	0	0	0
MEAN	0	0	1.30	.039	0	0	0	0	0	0	0	0
MAX	0	0	15	.72	0	0	0	0	0	0	0	0
MIN	0	0	0	0	0	0	0	0	0	0	0	0
AC-FT	0	0	80	2.4	0	0	0	0	0	0	0	0

CAL YR 1971 TOTAL 67.73 MEAN .19 MAX 15 MIN 0 AC-FT 134
WTR YR 1972 TOTAL 41.42 MEAN .11 MAX 15 MIN 0 AC-FT 82

PEAK DISCHARGE (BASE, 50 CFS).--No peak above base.

11033000 WEST FORK SAN LUIS REY RIVER NEAR WARNER SPRINGS, CALIF.

LOCATION.--Lat 33°17'48", long 116°45'32", in San Jose del Valle Grant, San Diego County, on left bank 0.2 mile upstream from Sink Road, 2.6 miles upstream from mouth, and 7.5 miles west of Warner Springs. Prior to Nov. 5, 1971, at site 500 ft downstream.

DRAINAGE AREA.--25.5 sq mi.

PERIOD OF RECORD.--January 1913 to November 1915, October 1956 to current year. Low-flow records not equivalent prior to Nov. 5, 1971, due to undetermined amount of underflow between sites.

GAGE.--Water-stage recorder. Altitude of gage is 2,800 ft (from topographic map). Prior to Oct. 1, 1956, at different datum. Prior to Nov. 5, 1971, at site 500 ft downstream at same datum.

AVERAGE DISCHARGE.--17 years (1913-15, 1957-72), 7.42 cfs (5,380 acre-ft per year); median of yearly mean discharges, 2.3 cfs (1,700 acre-ft per year).

EXTREMES.--Current year: Maximum discharge, 106 cfs Dec. 26 (gage height, 10.74 ft); no flow Nov. 5 to Dec. 21, Apr. 20 to May, June 12 to Sept. 30.
Period of record: Maximum discharge, 4,200 cfs Dec. 6, 1966 (gage height, 11.87 ft), from rating curve extended above 250 cfs on basis of slope-area measurement of maximum flow; no flow at times in most years.

REMARKS.--Records good. No regulation or diversion above station.

DISCHARGE, IN CUBIC FEET PER SECOND, WATER YEAR OCTOBER 1971 TO SEPTEMBER 1972

DAY	OCT	NOV	DEC	JAN	FEB	MAR	APR	MAY	JUN	JUL	AUG	SEP
1	.08	.08	0	2.2	.88	.29	.19	0	.06			
2	.11	.08	0	2.2	.88	.29	.19	0	.06			
3	.10	.07	0	2.2	.88	.33	.19	0	.05			
4	.08	.07	0	1.7	.88	.33	.19	0	.04			
5	.08	0	0	1.4	1.2	.33	.19	0	.04			
6	.06	0	0	1.4	3.3	.33	.16	0	.02			
7	.05	0	0	1.5	1.9	.33	.16	0	.02			
8	.07	0	0	1.4	.42	.29	.16	0	.02			
9	.06	0	0	1.4	.37	.25	.12	.12	.02			
10	.05	0	0	1.4	.37	.22	.12	.12	.02			
11	.04	0	0	1.2	.33	.25	.14	.12	.01			
12	.04	0	0	1.4	.29	.25	.14	.10	0			
13	.03	0	0	1.2	.29	.22	.16	.10	0			
14	.02	0	0	1.2	.29	.22	.16	.10	0			
15	.03	0	0	1.1	.33	.22	.16	.10	0			
16	.06	0	0	1.1	.29	.22	.14	.08	0			
17	.11	0	0	1.1	.29	.22	.14	.08	0			
18	.11	0	0	1.1	.29	.22	.14	.08	0			
19	.11	0	0	.96	.29	.22	.12	.12	0			
20	.11	0	0	.96	.29	.22	0	.12	0			
21	.08	0	0	.96	.25	.19	0	.12	0			
22	.08	0	1.2	.96	.25	.19	0	.12	0			
23	.08	0	7.8	.96	.29	.19	0	.10	0			
24	.07	0	4.6	.96	.29	.19	0	.10	0			
25	.10	0	24	.88	.29	.19	0	.10	0			
26	.13	0	41	.88	.29	.19	0	.10	0			
27	.12	0	7.9	.88	.29	.19	0	.10	0			
28	.14	0	7.6	.88	.29	.19	0	.10	0			
29	.11	0	4.8	.88	.33	.19	0	.08	0			
30	.11	0	4.0	.88	------	.19	0	.07	0			
31	.13	------	2.9	.88	------	.19	------	.06	------			------
TOTAL	2.55	.30	105.8	38.12	16.63	7.34	2.97	2.29	.36	0	0	0
MEAN	.082	.010	3.41	1.23	.57	.24	.099	.074	.012	0	0	0
MAX	.14	.08	41	2.2	3.3	.33	.19	.12	.06	0	0	0
MIN	.02	0	0	.88	.25	.19	0	0	0	0	0	0
AC-FT	5.1	.6	210	76	33	15	5.9	4.5	.7	0	0	0

CAL YR 1971 TOTAL 551.20 MEAN 1.51 MAX 41 MIN 0 AC-FT 1,090
WTR YR 1972 TOTAL 176.36 MEAN .48 MAX 41 MIN 0 AC-FT 350

PEAK DISCHARGE (BASE, 100 CFS).--Dec. 26 (0015) 106 cfs (10.74 ft).

11037700 PAUMA CREEK NEAR PAUMA VALLEY, CALIF.

LOCATION.--Lat 33°20'10", long 116°58'25", in Pauma Grant, San Diego County, on right bank 0.3 mile downstream from unnamed tributary, and 2.2 miles north of Pauma Valley.

DRAINAGE AREA.--11.0 sq mi.

PERIOD OF RECORD.--October 1964 to current year.

GAGE.--Water-stage recorder; water-stage recorder and Parshall flume on diversion. Altitude of gage is 1,240 ft (from topographic map).

AVERAGE DISCHARGE (Creek only).--8 years, 3.70 cfs (2,680 acre-ft per year).
(Combined creek and diversion).--8 years, 4.47 cfs (3,240 acre-ft per year).

EXTREMES (Creek only).--Current year: Maximum discharge, 51 cfs Dec. 26 (gage height, 3.07 ft); no flow for many days.
Period of record: Maximum discharge, 2,100 cfs Dec. 6, 1966 (gage height, 8.60 ft), from rating curve extended above 110 cfs on basis of slope-area measurement at gage height 7.26 ft; no flow much of each year.
(Combined flow).--Current year: Maximum discharge, 51 cfs Nov. 29; minimum daily, 0.04 cfs July 29 to Aug. 2.
Period of record: Maximum discharge, 2,100 cfs Dec. 6, 1966; minimum daily, 0.04 cfs July 29 to Aug. 2, 1972.

REMARKS.--Records good. No regulation above station. Pauma Valley Water Co. diverts from a site 0.2 mile upstream. For records of combined discharge of Pauma Creek and Pauma Valley Water Co.'s diversion, see following page.

DISCHARGE, IN CUBIC FEET PER SECOND, WATER YEAR OCTOBER 1971 TO SEPTEMBER 1972

DAY	OCT	NOV	DEC	JAN	FEB	MAR	APR	MAY	JUN	JUL	AUG	SEP
1	.02	.05	0	1.5	.10	.04	.02	.04	.01			
2	.02	.03	0	1.3	.08	.03	.01	.04	.01			
3	.01	.02	0	1.2	.07	.04	.01	.03	0			
4	.01	.02	0	1.0	.06	.04	.01	.03	0			
5	0	.01	0	1.0	.36	.03	.01	.03	.01			
6	0	.01	.02	1.0	.85	.03	.01	.04	.01			
7	0	.01	.21	1.0	.46	.03	.01	.03	.01			
8	0	.01	.28	1.0	.36	.03	.01	.03	.01			
9	0	.01	.31	.94	.28	.02	.01	.02	.01			
10	0	.01	.31	.94	.23	.02	.01	.01	.01			
11	0	.01	.28	.94	.17	.02	.01	.01	.01			
12	0	.02	.26	.94	.15	.02	.01	0	0			
13	0	.01	.28	.94	.13	.02	.03	0	0			
14	0	.01	.28	.80	.11	.02	.02	0	0			
15	0	.01	.34	.76	.11	.02	.01	0	0			
16	.01	0	.36	.76	.10	.01	0	0	0			
17	.01	0	.36	.72	.10	.01	0	0	0			
18	0	0	.34	.68	.10	.02	0	0	0			
19	0	0	.34	.64	.08	.02	.28	0	0			
20	0	0	.34	.60	.10	.02	.68	.07	0			
21	0	0	.34	.60	.08	.02	.68	.05	0			
22	.21	0	6.5	.60	.10	.02	.49	.05	0			
23	.17	0	9.3	.60	.10	.02	.34	.05	0			
24	.15	0	4.3	.39	.08	.02	.19	.05	0			
25	.13	0	14	.21	.07	.02	.11	.05	0			
26	.11	0	23	.17	.06	.02	.08	.05	0			
27	.10	0	8.0	.17	.05	.02	.06	.04	0			
28	.10	0	6.3	.17	.06	.02	.05	.03	0			
29	.08	0	3.6	.15	.05	.02	.05	.02	0			
30	.07	0	2.2	.13	------	.02	.04	.01	0			
31	.06	------	1.7	.11	------	.02	------	.01	------			------
TOTAL	1.26	.24	83.55	21.96	4.65	.71	3.24	.79	.09	0	0	0
MEAN	.041	.008	2.70	.71	.16	.023	.11	.026	.003	0	0	0
MAX	.21	.05	23	1.5	.85	.04	.68	.07	.01	0	0	0
MIN	0	0	0	.11	.05	.01	0	0	0	0	0	0
AC-FT	2.5	.5	166	44	9.2	1.4	6.4	1.6	.2	0	0	0

CAL YR 1971 TOTAL 258.52 MEAN .71 MAX 23 MIN 0 AC-FT 513
WTR YR 1972 TOTAL 116.49 MEAN .32 MAX 23 MIN 0 AC-FT 231

PEAK DISCHARGE (BASE, 50 CFS).--Dec. 26 (0300) 51 cfs (3.07 ft).

11037700 PAUMA CREEK NEAR PAUMA VALLEY, CALIF.--Continued

COMBINED DISCHARGE, IN CUBIC FEET PER SECOND, OF PAUMA CREEK AND PAUMA VALLEY WATER CO.'S DIVERSION NEAR PAUMA VALLEY, CALIF., WATER YEAR OCTOBER 1971 TO SEPTEMBER 1972

DAY	OCT	NOV	DEC	JAN	FEB	MAR	APR	MAY	JUN	JUL	AUG	SEP
1	.18	.35	.63	2.5	1.3	1.0	.76	.72	.43	.15	.04	.07
2	.17	.31	.58	2.3	1.3	1.0	.75	.70	.46	.15	.04	.07
3	.14	.29	.69	2.2	1.3	1.0	.75	.69	.50	.13	.05	.07
4	.13	.29	.73	2.0	1.3	1.0	.75	.70	.47	.10	.06	.08
5	.10	.28	.70	1.9	1.8	1.0	.70	.72	.42	.09	.05	.07
6	.12	.29	.73	1.9	2.3	1.0	.71	.80	.56	.09	.05	.25
7	.12	.28	.99	1.9	1.8	1.1	.78	1.0	.71	.08	.05	.20
8	.12	.29	.98	1.8	1.7	1.1	.77	.80	.81	.08	.05	.19
9	.12	.30	.98	1.6	1.6	1.0	.71	.76	.75	.09	.06	.19
10	.10	.29	.96	1.6	1.4	.99	.72	.73	.75	.08	.06	.19
11	.10	.28	.91	1.5	1.4	.98	.72	.71	.72	.08	.06	.19
12	.10	.41	.89	1.6	1.4	.97	.72	.60	.48	.07	.06	.17
13	.10	.55	.97	1.6	1.3	.98	.93	.53	.41	.08	.08	.15
14	.12	.75	1.1	1.6	1.3	.95	.94	.46	.38	.07	.08	.14
15	.15	.63	1.0	1.6	1.3	.93	.86	.41	.35	.08	.08	.13
16	.79	.46	.99	1.5	1.3	.89	.82	.44	.34	.09	.09	.13
17	1.0	.41	.93	1.5	1.3	.88	.78	.49	.31	.09	.09	.14
18	.76	.43	.94	1.5	1.2	.92	.90	.58	.29	.09	.08	.14
19	.36	.33	.94	1.5	1.2	.87	1.4	.62	.27	.09	.08	.15
20	.28	.37	.94	1.4	1.3	.87	1.5	1.7	.25	.10	.08	.15
21	.11	.40	.94	1.4	1.2	.87	1.4	1.4	.36	.09	.07	.13
22	.32	.45	7.1	1.4	1.2	.87	1.2	1.1	.71	.09	.07	.12
23	.40	.46	9.6	1.4	1.2	.87	1.1	.85	.72	.09	.06	.13
24	.38	.40	4.6	1.4	1.2	.87	.99	.85	.64	.07	.06	.14
25	.39	.40	14	1.4	1.2	.84	.91	.85	.39	.07	.09	.16
26	.49	.41	23	1.3	1.1	.84	.80	.83	.35	.07	.09	.16
27	.45	.48	8.8	1.3	1.1	.84	.77	.70	.30	.06	.09	.17
28	.68	.64	7.5	1.3	1.1	.84	.74	.60	.24	.06	.09	.17
29	.61	.67	4.7	1.3	1.1	.84	.74	.56	.20	.04	.07	.16
30	.58	.67	3.3	1.3	------	.84	.73	.50	.16	.04	.08	.14
31	.39	------	2.7	1.3	------	.84	------	.45	------	.04	.07	------
TOTAL	9.86	12.57	103.82	49.8	39.2	28.79	26.35	22.85	13.73	2.60	2.13	4.35
MEAN	.32	.42	3.35	1.61	1.35	.93	.88	.74	.46	.084	.069	.15
MAX	1.0	.75	23	2.5	2.3	1.1	1.5	1.7	.81	.15	.09	.25
MIN	.10	.28	.58	1.3	1.1	.84	.70	.41	.16	.04	.04	.07
AC-FT	20	25	206	99	78	57	52	45	27	5.2	4.2	8.6

CAL YR 1971 TOTAL 126.25 MEAN .35 MAX 23 MIN 0 AC-FT 250
WTR YR 1972 TOTAL 316.05 MEAN .86 MAX 23 MIN .04 AC-FT 627

PEAK DISCHARGE (BASE, 50 CFS).--Dec. 26 (0300) 51 cfs (3.07 ft).

11039100 SAN LUIS REY RIVER TRIBUTARY NEAR PALA, CALIF.

LOCATION.--Lat 33°21'45", long 117°02'55", in SW¼NW¼SW¼ sec.25, T.9 S., R.2 W., San Diego County, on upstream right bank at culvert on State Highway 76, 1.5 miles east of Pala.

DRAINAGE AREA.--1.01 sq mi.

PERIOD OF RECORD.--Water years 1962-65 (annual maximum), September 1965 to current year.

GAGE.--Water-stage recorder with rain-gage attachment and corrugated-pipe control. Altitude of gage is 520 ft (from topographic map). Dec. 8, 1961, to Sept. 20, 1965, crest-stage gage only at same site and datum.

AVERAGE DISCHARGE.--7 years (1965-72), 0.006 cfs (4.3 acre-ft per year).

EXTREMES.--Current year: No flow during year.
Period of record: Maximum discharge, 25 cfs Nov. 22, 1965 (gage height, 16.77 ft), from rating curve defined by computation of flow through culvert at gage heights 15.12, 15.58, 15.70, and 16.38 ft; no flow most of each year.

REMARKS.--No flow since Dec. 21, 1970. No regulation or diversion above station. Monthly precipitation, in inches, is as follows: October, 0.8; November, 0.2; December, 4.6; February, 0.1; April, 0.2; May, 0.5; June, 0.2; September, 0.5; the water year, 7.1.

11040000 SAN LUIS REY RIVER AT MONSERATE NARROWS, NEAR PALA, CALIF.

LOCATION.--Lat 33°20'14", long 117°08'07", in SW¼SE¼NW¼ sec.6, T.10 S., R.2 W., San Diego County, on left bank 4 miles southwest of Pala, and 6 miles northeast of Bonsall.

DRAINAGE AREA.--373 sq mi.

PERIOD OF RECORD.--December 1935 to March 1938 (fragmentary), April 1938 to November 1941, October 1946 to current year.

GAGE.--Water-stage recorder. Datum of gage is 270.82 ft above mean sea level (levels by State of California). Prior to October 1946, at same site at different datum. Oct. 22, 1946, to Nov. 30, 1954, at datum 1.0 ft higher.

AVERAGE DISCHARGE.--29 years (1938-41, 1946-72), 6.97 cfs (5,050 acre-ft per year); median of yearly mean discharges, 1.6 cfs (1,200 acre-ft per year).

EXTREMES.--Current year: No flow during year.
Period of record: Maximum gage height, 8.7 ft Feb. 7, 1937, datum then in use (discharge not determined); maximum discharge known, 7,000 cfs Dec. 6, 1966 (gage height, 6.70 ft); no flow at times in most years.

REMARKS.--No flow since May 21, 1970. Flow regulated by Lake Henshaw (see sta 11035000). Several diversions above station.

11040200 KEYS CREEK TRIBUTARY AT VALLEY CENTER, CALIF.

LOCATION.--Lat 33°13'45", long 117°02'09", in NW¼SE¼SE¼ sec.12, T.11 S., R.2 W., San Diego County, on left bank 140 ft upstream from bridge on Valley Center Road, 0.3 mile downstream from unnamed tributary, and 0.8 mile north of Valley Center.

DRAINAGE AREA.--7.65 sq mi.

PERIOD OF RECORD.--April 1970 to current year.

GAGE.--Water-stage recorder. Datum of gage is 1,279.99 ft above mean sea level (San Diego County Special District Services bench mark).

EXTREMES.--Current year: Maximum discharge, 22 cfs Dec. 27 (gage height, 1.97 ft); no flow for many days.
Period of record: Maximum discharge, 67 cfs Dec. 21 (gage height, 2.58 ft); no flow for part of each year.
Flood of Jan. 25, 1969, 990 cfs, by San Diego County Special District Services.

REMARKS.--Records good. No regulation above station. Some pumping for irrigation above station.

DISCHARGE, IN CUBIC FEET PER SECOND, WATER YEAR OCTOBER 1971 TO SEPTEMBER 1972

DAY	OCT	NOV	DEC	JAN	FEB	MAR	APR	MAY	JUN	JUL	AUG	SEP
1	0	.04	.05	.13	.08	.08	.05	.02	.01			
2	0	.04	.05	.12	.08	.07	.05	.02	.01			
3	0	.04	.06	.11	.08	.07	.05	.02	.02			
4	0	.04	.06	.10	.08	.07	.04	.02	.01			
5	0	.04	.05	.10	.08	.07	.04	.03	.01			
6	0	.04	.05	.10	.08	.07	.04	.03	.03			
7	0	.05	.06	.10	.08	.07	.04	.03	.04			
8	0	.05	.05	.10	.08	.07	.04	.03	.04			
9	0	.04	.06	.10	.08	.07	.04	.03	.04			
10	0	.04	.06	.10	.07	.07	.05	.03	.04			
11	0	.05	.06	.10	.07	.07	.04	.03	.03			
12	0	.05	.06	.11	.07	.06	.04	.03	.02			
13	0	.05	.06	.10	.07	.06	.04	.02	.02			
14	0	.05	.06	.10	.07	.06	.04	.02	.02			
15	0	.05	.06	.10	.07	.06	.04	.02	.01			
16	.04	.05	.06	.10	.07	.06	.04	.02	.01			
17	.05	.05	.06	.10	.07	.06	.03	.02	.01			
18	.05	.05	.06	.10	.07	.06	.03	.03	0			
19	.04	.05	.06	.10	.07	.06	.04	.04	0			
20	.04	.05	.06	.10	.07	.06	.04	.04	.01			
21	.04	.05	.06	.10	.07	.06	.03	.03	.03			
22	.04	.05	.10	.10	.07	.06	.03	.03	.03			
23	.04	.05	.10	.10	.07	.07	.03	.03	.03			
24	.05	.05	.10	.08	.07	.06	.03	.04	.02			
25	.05	.05	.79	.08	.07	.06	.03	.04	.01			
26	.05	.05	.54	.08	.07	.06	.03	.04	0			
27	.04	.05	3.9	.08	.07	.05	.03	.03	0			
28	.04	.05	2.3	.08	.08	.05	.03	.03	0			
29	.04	.06	.45	.08	.08	.05	.02	.03	0			
30	.04	.05	.17	.08	------	.05	.02	.02	0			
31	.04	------	.15	.08	------	.05	------	.01	------			------
TOTAL	.69	1.43	9.81	3.01	2.14	1.94	1.10	.86	.50	0	0	0
MEAN	.022	.048	.32	.097	.074	.063	.037	.028	.017	0	0	0
MAX	.05	.06	3.9	.13	.08	.08	.05	.04	.04	0	0	0
MIN	0	.04	.05	.08	.07	.05	.02	.01	0	0	0	0
AC-FT	1.4	2.8	19	6.0	4.2	3.9	2.2	1.7	1.0	0	0	0

CAL YR 1971 TOTAL 24.31 MEAN .067 MAX 3.9 MIN 0 AC-FT 48
WTR YR 1972 TOTAL 21.48 MEAN .059 MAX 3.9 MIN 0 AC-FT 43

11041000 SAN LUIS REY RIVER NEAR BONSALL, CALIF.

LOCATION.--Lat 33°15'13", long 117°14'48", in SW¼NE¼NE¼ sec.1, T.11 S., R.4 W., San Diego County, on left bank 0.7 mile downstream from bridge on State Highway 76, and 2.8 miles southwest of Bonsall.

DRAINAGE AREA.--513 sq mi.

PERIOD OF RECORD.--July 1916 to September 1918 (gage heights and discharge measurements only), October 1929 to current year.

GAGE.--Water-stage recorder. Datum of gage is 108.10 ft above mean sea level. See WSP 1315-B, 1735 for history of changes prior to Sept. 16, 1946.

AVERAGE DISCHARGE.--43 years (1929-72), 17.9 cfs (12,970 acre-ft per year); median of yearly mean discharges, 4.3 cfs (3,100 acre-ft per year).

EXTREMES.--Current year: Maximum discharge, 76 cfs Dec. 25 (gage height, 7.77 ft); no flow Oct. 1-16.
Period of record: Maximum discharge, 18,100 cfs Mar. 3, 1938 (gage height, 16.04 ft, present datum), from rating curve extended above 2,400 cfs; no flow for part of each year.

REMARKS.--Records good except those for period of no gage-height record, which are poor. Flow regulated by Lake Henshaw (capacity, 194,300 acre-ft). Several diversions above station.

DISCHARGE, IN CUBIC FEET PER SECOND, WATER YEAR OCTOBER 1971 TO SEPTEMBER 1972

DAY	OCT	NOV	DEC	JAN	FEB	MAR	APR	MAY	JUN	JUL	AUG	SEP
1	0	1.5	3.9	15	8.1	6.5	4.5	2.8	1.5	1.7	.35	.91
2	0	1.4	3.6	14	7.9	6.4	4.7	2.6	1.6	1.8	.45	.86
3	0	1.4	3.6	13	7.6	6.2	4.8	2.2	1.7	1.7	.45	1.0
4	0	1.4	4.0	12	7.0	6.2	4.8	2.2	1.7	1.5	.40	1.3
5	0	1.4	4.0	11	8.0	6.1	4.6	2.1	1.9	1.5	.35	1.3
6	0	1.4	4.0	11	8.4	6.1	4.7	2.1	2.2	1.3	.30	1.6
7	0	1.4	4.4	11	8.5	6.1	4.5	2.4	3.2	1.2	.25	2.1
8	0	1.4	4.9	11	8.4	5.9	4.4	2.5	3.6	1.2	.30	2.2
9	0	1.4	4.8	11	8.1	5.9	4.5	2.1	3.6	1.3	.35	2.4
10	0	1.4	4.4	10	8.0	5.9	4.5	2.1	3.4	1.5	.35	2.4
11	0	1.5	4.3	10	7.6	5.9	4.5	2.1	3.2	1.4	.30	2.3
12	0	2.2	4.0	10	7.3	5.9	4.4	2.1	3.0	1.3	.40	2.0
13	0	2.2	4.4	10	7.3	5.9	4.7	2.3	2.6	1.3	.60	1.8
14	0	2.2	4.5	9.8	7.2	5.9	5.0	2.7	2.5	1.4	.65	1.7
15	0	2.7	4.5	9.4	7.2	5.6	4.8	2.7	2.5	1.2	.55	1.7
16	0	3.5	4.3	9.4	7.1	5.7	4.4	2.4	2.1	1.2	.55	1.8
17	.91	3.4	4.0	9.4	7.0	5.7	4.3	2.2	2.0	1.2	.55	1.9
18	.75	3.3	4.3	9.2	7.0	5.6	4.3	2.1	1.9	1.0	.60	2.0
19	.60	3.2	4.3	9.1	6.9	5.6	4.3	2.2	1.8	1.0	.55	1.8
20	.60	3.2	4.0	8.8	6.9	5.7	4.4	2.5	1.9	.96	.50	1.8
21	.60	3.2	4.0	8.8	6.9	5.6	4.0	3.0	2.4	1.0	.45	1.8
22	.65	3.2	5.3	8.9	6.9	5.5	3.8	2.8	2.5	1.0	.40	1.7
23	.81	3.2	20	9.2	6.9	5.4	3.8	2.6	2.4	1.2	.35	1.5
24	.86	3.2	19	9.1	6.9	5.3	3.8	2.4	2.1	1.1	.40	1.8
25	.91	3.2	41	8.9	6.8	4.9	3.5	2.3	1.8	.96	.50	1.8
26	1.2	3.2	51	8.6	6.7	5.3	3.1	2.2	1.8	.75	.55	1.7
27	1.4	3.2	28	8.3	6.6	5.3	2.8	2.2	1.5	.65	.60	1.7
28	1.5	3.3	39	8.1	6.6	5.0	2.7	2.1	1.5	.65	.65	1.7
29	1.5	3.7	36	8.4	6.7	4.9	2.7	2.0	1.7	.55	.70	1.7
30	1.7	4.0	21	8.5	------	4.8	2.7	1.7	1.7	.50	.75	1.8
31	1.6	------	17	8.3	------	4.8	------	1.5	------	.60	.75	------
TOTAL	15.59	74.9	365.5	309.2	212.5	175.6	124.0	71.2	67.3	35.62	14.90	52.07
MEAN	.50	2.50	11.8	9.97	7.33	5.66	4.13	2.30	2.24	1.15	.48	1.74
MAX	1.7	4.0	51	15	8.5	6.5	5.0	3.0	3.6	1.8	.75	2.4
MIN	0	1.4	3.6	8.1	6.6	4.8	2.7	1.5	1.5	.50	.25	.86
AC-FT	31	149	725	613	421	348	246	141	133	71	30	103

CAL YR 1971 TOTAL 1,631.61 MEAN 4.47 MAX 51 MIN 0 AC-FT 3,240
WTR YR 1972 TOTAL 1,518.38 MEAN 4.15 MAX 51 MIN 0 AC-FT 3,010

NOTE.--No gage-height record Oct. 31 to Dec. 2.

11042000 SAN LUIS REY RIVER AT OCEANSIDE, CALIF.

LOCATION.--Lat 33°12'48", long 117°22'33", in SW¼SE¼SW¼ sec.14, T.11 S., R.5 W., San Diego County, on right bank 0.7 mile upstream from bridge on Interstate Highway 5, 1.1 miles upstream from mouth, and 1.2 miles north of Oceanside.

DRAINAGE AREA.--558 sq mi.

PERIOD OF RECORD.--April 1912 to September 1914 (published as "near Oceanside"), January 1916, October 1929 to January 1942, October 1946 to current year.

GAGE.--Water-stage recorder. Altitude of gage is 20 ft (from topographic map). April 1912 to September 1914, nonrecording gage at site 0.8 mile upstream at different datum. January 1916, nonrecording gage 0.2 mile downstream at different datum.

AVERAGE DISCHARGE.--40 years (1912-14, 1929-41, 1946-72), 14.9 cfs (10,800 acre-ft per year); median of yearly mean discharges, 1.3 cfs (940 acre-ft per year).

EXTREMES.--Current year: Maximum discharge, 42 cfs Dec. 25 (gage height, 5.40 ft); minimum daily, 3.1 cfs Oct. 5, 6, May 30, June 26, 27.
Period of record: Maximum discharge, 95,600 cfs Jan. 27, 1916, from hydrograph based on discharge measurements; no flow for several months in most years.

REMARKS.--Records good. Flow regulated by Lake Henshaw (capacity, 194,300 acre-ft). Several diversions for irrigation and domestic use above station. AVERAGE DISCHARGE represents flow to ocean during period of record regardless of upstream development. Records of suspended-sediment loads for the current year are published in Part 2 of this report.

DISCHARGE, IN CUBIC FEET PER SECOND, WATER YEAR OCTOBER 1971 TO SEPTEMBER 1972

DAY	OCT	NOV	DEC	JAN	FEB	MAR	APR	MAY	JUN	JUL	AUG	SEP
1	4.0	4.6	5.1	12	6.2	7.6	5.1	4.0	3.2	4.2	4.0	4.6
2	4.0	4.9	5.1	10	6.4	7.3	4.9	4.6	3.4	4.0	4.2	4.4
3	3.6	5.1	5.3	9.0	6.4	7.3	4.7	5.1	3.4	3.8	4.4	4.0
4	3.2	4.9	5.5	8.4	6.2	7.3	4.6	4.6	3.4	3.6	4.6	3.8
5	3.1	4.9	5.3	7.1	5.7	7.1	4.7	4.4	3.4	3.8	4.6	3.6
6	3.1	4.7	5.3	6.6	6.9	7.1	4.6	4.4	3.8	4.2	4.4	3.8
7	3.4	3.8	5.5	6.9	6.9	8.1	4.7	4.2	4.4	4.6	4.2	4.2
8	3.6	4.0	5.3	6.9	6.9	7.6	4.6	4.0	4.9	4.4	4.4	4.6
9	3.6	4.7	5.3	6.4	7.3	7.3	4.4	4.2	5.3	4.0	4.7	5.1
10	3.6	4.7	5.3	6.0	7.6	7.1	4.2	4.6	4.9	4.0	4.7	5.1
11	3.4	5.1	5.3	5.7	7.1	6.9	4.2	4.6	4.4	4.0	4.7	4.9
12	4.0	5.3	5.1	6.2	7.1	6.9	4.6	5.1	4.2	4.4	4.7	4.7
13	4.0	5.1	5.3	7.6	6.9	6.9	5.1	5.1	4.2	4.6	4.6	5.1
14	4.0	3.8	5.3	7.3	6.9	6.9	5.1	4.4	4.6	4.7	4.4	4.9
15	4.4	4.6	5.5	6.4	6.9	7.1	4.7	3.8	4.7	4.7	4.2	4.2
16	4.6	4.7	5.5	6.2	7.1	7.1	4.6	3.6	4.6	4.2	4.6	4.4
17	5.1	4.9	5.5	7.1	7.3	7.1	4.6	4.0	4.7	3.8	4.9	4.4
18	4.7	5.3	5.5	7.3	7.6	6.9	4.6	4.2	4.9	3.4	4.9	4.4
19	4.4	5.5	5.3	7.1	7.1	6.4	4.9	3.8	5.3	4.4	4.6	4.6
20	4.7	5.3	5.3	7.1	7.1	6.0	5.1	3.4	4.6	5.1	4.0	4.9
21	4.7	4.9	5.1	7.1	7.1	5.7	4.9	3.2	4.4	5.1	4.0	5.5
22	4.7	4.7	6.2	6.6	6.9	5.7	5.1	3.4	4.2	4.7	4.0	5.5
23	4.9	4.6	7.9	6.4	6.9	5.7	4.4	3.8	4.0	4.6	4.2	5.5
24	4.7	4.6	17	6.2	7.3	6.0	4.2	4.4	3.6	4.4	4.6	5.3
25	4.0	4.7	38	6.2	7.8	6.0	4.2	4.4	3.2	4.4	4.7	4.9
26	3.8	4.6	38	6.4	8.1	5.5	4.6	4.2	3.1	4.7	4.7	4.7
27	4.6	4.9	26	6.4	7.8	5.3	4.6	3.8	3.1	6.0	4.4	5.1
28	4.7	5.3	27	6.6	7.8	5.1	4.0	3.4	3.4	4.7	4.2	5.3
29	4.7	5.3	32	6.9	7.8	5.3	4.2	3.2	4.2	4.7	4.0	5.3
30	4.6	5.3	21	6.4	------	5.5	4.0	3.1	4.6	4.4	4.2	5.3
31	4.6	------	15	6.2	------	5.3	------	3.2	------	3.8	3.8	------
TOTAL	128.5	144.8	339.8	218.7	205.1	203.1	138.2	126.2	124.1	135.4	136.6	142.1
MEAN	4.15	4.83	11.0	7.05	7.07	6.55	4.61	4.07	4.14	4.37	4.41	4.74
MAX	5.1	5.5	38	12	8.1	8.1	5.1	5.1	5.3	6.0	4.9	5.5
MIN	3.1	3.8	5.1	5.7	5.7	5.1	4.0	3.1	3.1	3.4	3.8	3.6
AC-FT	255	287	674	434	407	403	274	250	246	269	271	282

CAL YR 1971 TOTAL 2,001.4 MEAN 5.48 MAX 38 MIN 2.9 AC-FT 3,970
WTR YR 1972 TOTAL 2,042.6 MEAN 5.58 MAX 38 MIN 3.1 AC-FT 4,050

11042400 TEMECULA CREEK NEAR AGUANGA, CALIF.

LOCATION.--Lat 33°27'33", long 116°55'22", in NE¼SW¼SW¼ sec.19, T.8 S., R.1 E., Riverside County, on right bank 1.6 miles downstream from Long Canyon, and 3.5 miles northwest of Aguanga.

DRAINAGE AREA.--131 sq mi.

PERIOD OF RECORD.--August 1957 to current year.

GAGE.--Water-stage recorder. Altitude of gage is 1,590 ft (from topographic map).

AVERAGE DISCHARGE.--15 years, 4.54 cfs (3,290 acre-ft per year); median of yearly mean discharges, 1.6 cfs (1,200 acre-ft per year).

EXTREMES.--Current year: Maximum discharge, 96 cfs Dec. 26 (gage height, 2.37 ft); no flow July 16, July 24 to Aug. 10.
Period of record: Maximum discharge, 3,540 cfs Apr. 3, 1958 (gage height, 6.57 ft), from rating curve extended above 1,200 cfs; no flow at times in each year.

REMARKS.--Records good. No regulation above station. Pumping for irrigation above station.

DISCHARGE, IN CUBIC FEET PER SECOND, WATER YEAR OCTOBER 1971 TO SEPTEMBER 1972

DAY	OCT	NOV	DEC	JAN	FEB	MAR	APR	MAY	JUN	JUL	AUG	SEP
1	.74	.80	.80	5.1	1.7	1.8	1.5	.36	.42	.16	0	.08
2	.67	.80	.90	4.3	1.7	1.8	1.4	.47	.42	.12	0	.05
3	.62	.80	.90	4.0	1.7	1.8	1.4	.72	.42	.19	0	.22
4	.48	.80	1.0	2.9	1.7	1.7	1.4	.66	.42	.15	0	.25
5	.36	.80	1.0	2.6	1.7	1.6	1.4	.66	.60	.13	0	.22
6	.35	.80	1.1	2.7	2.1	1.6	1.3	.64	.90	.14	0	.35
7	.38	.80	1.1	2.7	2.0	1.7	1.3	.62	.69	.13	0	.49
8	.33	.80	1.0	2.6	1.8	1.7	1.8	.67	.68	.13	0	.52
9	.39	.80	1.0	2.5	2.0	1.6	1.5	.60	.64	.05	0	.51
10	.26	.80	1.0	2.5	1.6	1.7	1.4	.33	.60	.07	0	.53
11	.25	.79	1.0	2.5	1.8	1.6	1.3	.41	.56	.11	.02	.39
12	.21	.80	.97	1.8	1.8	1.5	1.3	.48	.49	.11	.06	.32
13	.20	.80	.95	2.3	1.7	1.6	1.5	.51	.42	.12	.05	.33
14	.25	.80	1.0	2.2	1.8	1.7	1.4	.37	.42	.12	.08	.33
15	.39	.80	1.0	2.1	1.8	1.7	1.3	.32	.42	.09	.14	.37
16	.57	.80	.98	2.0	1.8	1.6	1.2	.22	.42	0	.15	.31
17	.81	.80	.90	2.0	1.8	1.5	1.1	.27	.42	.04	.12	.28
18	.87	.80	.89	1.6	1.7	1.5	1.1	.39	.42	.09	.08	.43
19	.78	.85	.87	2.0	1.6	1.5	1.4	.55	.42	.09	.01	.54
20	.70	.90	.87	1.7	1.5	1.6	1.8	1.2	.56	.09	.02	.52
21	.64	.85	.90	1.8	1.5	1.5	1.5	.88	.64	.10	.11	.41
22	.61	.87	1.8	1.8	1.6	1.5	1.1	.65	.56	.09	.07	.32
23	.58	.90	10	1.7	1.8	1.5	.90	.58	.49	.01	.05	.29
24	.78	.90	5.2	1.4	1.8	1.5	.90	.52	.42	0	.06	.35
25	.80	.90	16	1.2	1.8	1.4	.90	.42	.40	0	.07	.56
26	.80	.90	50	1.3	1.8	1.4	.80	.42	.36	0	.14	.59
27	.80	.90	19	1.7	1.7	1.6	.64	.42	.33	0	.12	.61
28	.74	.90	28	1.8	1.1	1.7	.64	.42	.27	0	.27	.61
29	.64	.90	16	1.7	1.2	1.7	.64	.42	.23	0	.21	.57
30	.69	.90	9.1	1.7	------	1.7	.30	.42	.19	0	.13	.44
31	.70	------	7.0	1.7	------	1.6	------	.42	------	0	.10	------
TOTAL	17.39	25.06	182.23	69.9	49.6	49.9	36.12	16.02	14.23	2.33	2.06	11.79
MEAN	.56	.84	5.88	2.25	1.71	1.61	1.20	.52	.47	.075	.067	.39
MAX	.87	.90	50	5.1	2.1	1.8	1.8	1.2	.90	.19	.27	.61
MIN	.20	.79	.80	1.2	1.1	1.4	.30	.22	.19	0	0	.05
AC-FT	34	50	361	139	98	99	72	32	28	4.6	4.1	23

CAL YR 1971 TOTAL 601.87 MEAN 1.65 MAX 50 MIN .10 AC-FT 1,190
WTR YR 1972 TOTAL 476.63 MEAN 1.30 MAX 50 MIN 0 AC-FT 945

PEAK DISCHARGE (BASE, 50 CFS).--Dec. 26 (0830) 96 cfs (2.37 ft).

11042500 TEMECULA CREEK AT VAIL DAM, CALIF.

LOCATION.--Lat 33°29'44", long 116°58'33", in Pauba Grant, Riverside County, at Vail Dam 0.2 mile downstream from Arroyo Seco, and 10 miles east of Temecula.

DRAINAGE AREA.--320 sq mi.

PERIOD OF RECORD.--October 1948 to current year. January 1923 to October 1930 at site 200 ft downstream and October 1930 to September 1948 at site 500 ft downstream, published as "at Nigger Canyon, near Temecula"; records not equivalent owing to change in natural water loss resulting from creation of Vail Lake. October 1948 to September 1951 published as "at Nigger Canyon, near Temecula"; records are for draft and spill only from Vail Lake. October 1951 to September 1955, published as "at Vail Dam, near Temecula."

GAGE.--Water-stage recorder with rain-gage attachment. National Weather Service nonrecording rain gage 0.2 mile upstream. Datum of gage is 1,350.0 ft above mean sea level (levels by Bureau of Reclamation). Water-stage recorder at site 500 ft downstream measures release and spill.

AVERAGE DISCHARGE.--25 years (1923-48), 14.5 cfs (10,500 acre-ft per year); median of yearly mean discharges, 8.3 cfs (6,000 acre-ft per year), see PERIOD OF RECORD; 24 years (1948-72), 5.51 cfs (3,990 acre-ft per year); median of yearly mean discharges, 2.5 cfs (1,800 acre-ft per year).

REMARKS.--Records of discharge represent all water reaching Vail Lake, including precipitation on lake surface. Discharge computed on basis of records of storage, release (draft), spill, and evaporation. Monthly evaporation from lake surface computed on basis of evaporation from a class A evaporation pan using coefficient of 0.77, excepting the period June 1964 to September 1965, when a 24-inch diameter sunken screen pan with a coefficient of 0.98 was used. Area-capacity tables for lake are based on a survey made in 1947. Vail Dam completed in June 1949. Capacity of lake at spillway level (elevation, 1,470.00 ft), 49,370 acre-ft. Dead storage, 2.4 acre-ft below lowest outlet at elevation 1,352.5 ft included in these records. There has been no spill since Nov. 13, 1948, date of closure. Water is released as required down Temecula Creek for diversion about 1 mile below dam. Monthly precipitation, in inches, from National Weather Service nonrecording rain gage is as follows: October, 0.96; November, 0.10; December, 5.29; April, 0.20; May, 0.53; June, 0.85; September, 0.31; the water year, 8.24.

MONTHLY DISCHARGE, WATER YEAR OCTOBER 1971 TO SEPTEMBER 1972

Date	Elevation (feet)a	Contents (acre-feet)	Change in contents (acre-feet)	Draft (acre-feet)	Evaporation (acre-feet)	Discharge (acre-feet)
		Vail Lake				
Sept. 30	1,441.60	23,922	-	-	-	-
Oct. 31	1,441.28	23,692	-230	0	304	74
Nov. 30	1,441.20	23,634	-58	0	222	164
Dec. 31	1,441.57	23,900	+266	0	158	424
CAL YR 1971	-	-	-2,889	784	3,921	1,816
Jan. 31	1,441.52	23,864	-36	0	148	112
Feb. 29	1,441.56	23,893	+29	0	186	215
Mar. 31	1,441.41	23,785	-108	0	299	191
Apr. 30	1,441.10	23,562	-223	0	325	102
May 31	1,440.69	23,270	-292	0	411	119
June 30	1,440.45	23,100	-170	0	369	199
July 31	1,439.78	22,626	-474	b 31	586	143
Aug. 31	1,439.17	22,199	-427	b 86	457	116
Sept. 30	1,438.71	21,883	-316	b 86	320	90
WTR YR 1972	-	-	-2,039	203	3,785	1,949

a Elevation at 2400.
b Draft includes pumping from lake as follows: July, 30 acre-ft; August, 85 acre-ft; September, 85 acre-ft; total, 200 acre-ft; furnished by Rancho California Water District.
NOTE.--For months when inflow to the lake was small and other quantities were large, discordant figures of discharge may appear. This arises primarily from the difficulty of computing discharge as a residual of several larger quantities, which are not susceptible to measurement with a precision necessary to produce a final answer within desirable limits of accuracy.

11043000 MURRIETA CREEK AT TEMECULA, CALIF.

LOCATION.--Lat 33°28'47", long 117°08'35", in Temecula Grant, Riverside County, on right bank 0.4 mile upstream from mouth, and 1.0 mile south of Temecula.

DRAINAGE AREA.--222 sq mi.

PERIOD OF RECORD.--October 1924 to current year. Monthly discharge only October 1924 to September 1930, published in WSP 1315-B.

GAGE.--Water-stage recorder. Concrete low-water control since August 1962. Altitude of gage is 970 ft (from topographic map). See WSP 1735 for history of changes prior to Dec. 16, 1938.

AVERAGE DISCHARGE.--48 years, 8.91 cfs (6,460 acre-ft per year); median of yearly mean discharges, 2.0 cfs (1,400 acre-ft per year).

EXTREMES.--Current year: Maximum discharge, 232 cfs Dec. 24 (gage height, 2.63 ft); minimum daily, 0.30 cfs Aug. 22.
Period of record: Maximum discharge, 17,500 cfs Jan. 23, 1943 (gage height, 13.82 ft); minimum daily, 0.02 cfs at times in 1969.

REMARKS.--Records good. No regulation above station. Pumping above station for irrigation of about 2,500 acres.

DISCHARGE, IN CUBIC FEET PER SECOND, WATER YEAR OCTOBER 1971 TO SEPTEMBER 1972

DAY	OCT	NOV	DEC	JAN	FEB	MAR	APR	MAY	JUN	JUL	AUG	SEP
1	1.0	.67	.74	1.7	.67	1.0	.88	.61	.53	.43	.32	.43
2	1.0	.64	.74	1.4	.64	.88	.88	.71	.53	.43	.32	.43
3	.96	.71	.74	1.4	.64	.84	.84	.67	.53	.43	.34	.53
4	.96	.61	.81	1.1	.64	.84	.81	.71	.53	.43	.34	.56
5	.96	.53	.81	1.0	1.0	.84	.81	.61	.53	.43	.34	.50
6	.92	.53	.84	1.0	.81	.81	.77	.58	.53	.43	.34	.50
7	.96	.50	1.1	.96	.81	.81	.84	.58	.53	.43	.36	.50
8	.96	1.1	1.2	1.0	.81	.81	1.0	.58	.53	.48	.36	.50
9	.96	1.3	1.2	.96	.81	.81	.96	.58	.53	.48	.36	.50
10	.96	1.4	1.3	.96	.77	1.0	.84	.58	.53	.43	.36	.50
11	.96	1.3	1.3	.96	.77	.88	.84	.58	.58	.43	.32	.50
12	.96	1.2	1.2	.96	.77	.84	.84	.58	.53	.45	.34	.48
13	.96	.96	1.2	.96	.77	.84	.92	.58	.53	.56	.34	.45
14	.96	.92	1.0	.96	.77	.88	.92	.61	.53	.58	.34	.43
15	.96	.88	.88	.92	.74	.88	.84	.61	.53	.56	.32	.43
16	.96	.74	.81	.92	.74	.88	.84	.61	.56	.53	.32	.43
17	1.0	.74	.77	.88	.74	.88	.84	.61	.58	.53	.32	.43
18	1.2	.77	.71	.88	.74	.88	.84	.61	.64	.40	.34	.45
19	.88	.71	.67	.88	.71	1.1	.84	.67	.64	.38	.34	.45
20	.84	.64	.64	.84	.71	1.1	.84	.74	.64	.38	.32	.45
21	.84	.71	.61	.84	.71	1.0	.81	.67	.96	.36	.32	.45
22	.84	.74	9.0	.84	.77	1.0	.81	.67	.81	.36	.30	.48
23	.84	.77	4.2	.81	.96	1.0	.88	.64	.58	.36	.32	.50
24	.84	.77	46	.81	.84	.96	.88	.64	.58	.36	.34	.53
25	.84	.77	50	1.1	.81	.92	.71	.64	.53	.34	.36	.53
26	.74	.77	18	.77	.81	1.0	.96	.64	.45	.32	.36	.53
27	.67	.77	44	.71	.81	1.1	.64	.56	.45	.32	.38	.53
28	.67	.74	35	.71	.96	1.2	.64	.53	.45	.34	.40	.53
29	.67	.77	9.3	.71	1.2	1.1	.64	.53	.45	.34	.40	.53
30	.67	.77	3.6	.67	------	1.0	.61	.53	.43	.34	.40	.50
31	.67	------	2.7	.67	------	.88	------	.53	------	.32	.43	------
TOTAL	27.61	24.43	241.07	29.28	22.93	28.96	24.77	18.99	16.75	12.96	10.75	14.56
MEAN	.89	.81	7.78	.94	.79	.93	.83	.61	.56	.42	.35	.49
MAX	1.2	1.4	50	1.7	1.2	1.2	1.0	.74	.96	.58	.43	.56
MIN	.67	.50	.61	.67	.64	.81	.61	.53	.43	.32	.30	.43
AC-FT	55	48	478	58	45	57	49	38	33	26	21	29

CAL YR 1971 TOTAL 456.24 MEAN 1.25 MAX 50 MIN .12 AC-FT 905
WTR YR 1972 TOTAL 473.06 MEAN 1.29 MAX 50 MIN .30 AC-FT 938

PEAK DISCHARGE (BASE, 55 CFS)

DATE	TIME	G.H.	DISCHARGE	DATE	TIME	G.H.	DISCHARGE
12-24	2200	2.63	232	12-27	1730	2.35	142
12-25	2130	2.10	87	12-28	1600	1.94	62

11044000 SANTA MARGARITA RIVER NEAR TEMECULA, CALIF.

LOCATION.--Lat 33°28'26", long 117°08'29", in Temecula Grant, Riverside County, on left bank at upper end of Temecula Canyon, 0.1 mile downstream from Murrieta Creek, and 1.4 miles south of Temecula.

DRAINAGE AREA.--588 sq mi.

PERIOD OF RECORD.--January 1923 to current year. Prior to October 1952, published as Temecula Creek at Railroad Canyon, near Temecula.

GAGE.--Water-stage recorder. Altitude of gage is 950 ft (from topographic map). Prior to Nov. 3, 1966, at site 100 ft downstream at same datum.

AVERAGE DISCHARGE.--25 years (1923-48), 28.2 cfs (20,420 acre-ft per year); median of yearly mean discharges, 13 cfs (9,400 acre-ft per year); 24 years (1948-72), 10.3 cfs (7,460 acre-ft per year); median of yearly mean discharges, 5.4 cfs (3,900 acre-ft per year).

EXTREMES.--Current year: Maximum discharge, 446 cfs Dec. 24 (gage height, 3.74 ft); minimum daily, 1.1 cfs Aug. 2, 23.
Period of record: Maximum discharge, 25,000 cfs Feb. 16, 1927 (gage height, 14.6 ft, at site 100 ft downstream), from rating curve extended above 10,000 cfs; minimum daily, 0.30 cfs Aug. 18-22, 1965, regulation by construction work above station.

REMARKS.--Records good except those above 65 cfs, which are poor. Flow partly regulated since November 1948 by Vail Lake (see sta 11042500). Pumping above station for irrigation.

DISCHARGE, IN CUBIC FEET PER SECOND, WATER YEAR OCTOBER 1971 TO SEPTEMBER 1972

DAY	OCT	NOV	DEC	JAN	FEB	MAR	APR	MAY	JUN	JUL	AUG	SEP
1	2.4	2.3	3.0	6.4	4.2	3.9	2.3	2.3	2.7	1.8	1.2	1.3
2	2.4	2.3	3.0	5.6	4.1	3.8	2.4	2.3	2.7	1.8	1.1	1.3
3	2.4	2.4	3.0	5.2	4.1	3.8	2.4	2.3	2.7	1.8	1.2	1.6
4	2.3	2.4	3.1	4.9	4.9	3.9	2.3	2.4	2.8	1.8	1.3	1.9
5	2.1	2.4	3.0	4.6	5.6	4.0	2.3	2.4	2.7	1.5	1.4	1.6
6	2.0	2.4	3.0	4.6	4.4	3.9	2.3	2.3	3.2	1.4	1.3	1.8
7	2.1	2.4	3.7	4.6	4.4	3.8	2.3	2.4	3.0	1.4	1.2	1.8
8	2.2	2.8	3.2	4.6	4.4	3.8	2.6	2.4	2.9	1.8	1.2	1.8
9	2.2	3.0	3.2	4.4	4.4	3.8	2.5	2.3	2.8	1.6	1.3	1.9
10	2.2	2.8	3.2	4.2	4.6	3.8	2.3	2.3	3.0	1.4	1.3	1.9
11	2.3	2.7	3.2	4.0	4.4	3.6	2.3	2.2	2.8	1.4	1.2	1.8
12	2.3	2.7	3.2	4.0	4.4	3.3	2.4	2.2	2.6	1.5	1.4	1.7
13	2.3	2.7	3.4	4.0	4.4	3.2	2.5	2.2	2.4	1.5	1.5	1.7
14	2.3	2.6	3.4	4.0	4.4	3.2	2.5	2.4	2.4	1.8	1.3	1.7
15	2.3	2.6	3.2	3.8	4.4	3.1	2.3	2.4	2.4	1.8	1.2	1.7
16	2.3	2.6	3.2	3.6	4.2	3.0	2.3	2.4	2.4	1.6	1.2	1.8
17	2.4	2.6	3.0	3.8	4.0	3.0	2.3	2.2	2.6	1.5	1.2	1.8
18	2.3	2.6	3.0	3.8	3.8	3.0	2.3	2.4	2.7	1.5	1.2	1.7
19	2.3	2.4	3.0	3.8	3.9	3.0	2.3	2.7	2.4	1.4	1.4	1.7
20	2.3	2.6	3.0	4.0	4.0	3.0	2.3	2.8	2.4	1.4	1.5	1.7
21	2.3	2.6	3.0	4.0	4.0	3.0	2.2	2.7	3.0	1.5	1.3	1.6
22	2.3	2.6	20	4.0	4.6	2.9	2.2	2.6	2.8	1.3	1.2	1.7
23	2.3	2.8	14	4.0	5.2	2.9	2.3	2.6	2.4	1.4	1.1	1.6
24	2.5	2.9	75	4.2	4.3	2.9	2.4	2.7	2.4	1.4	1.3	1.6
25	2.4	2.9	87	4.6	4.2	2.8	2.4	2.6	2.4	1.4	1.3	1.6
26	2.4	2.9	37	4.4	4.0	2.8	2.3	2.6	2.1	1.4	1.4	1.6
27	2.4	2.9	66	4.4	4.0	2.7	2.5	2.7	2.1	1.4	1.5	1.6
28	2.4	2.9	64	4.4	3.8	2.5	2.4	2.8	2.1	1.4	1.4	1.6
29	2.4	3.0	16	4.2	4.1	2.5	2.4	2.7	1.9	1.3	1.2	1.6
30	2.4	3.0	6.9	4.2	------	2.4	2.3	2.7	1.8	1.3	1.3	1.6
31	2.4	------	6.9	4.0	------	2.3	------	2.6	------	1.3	1.2	------
TOTAL	71.6	79.8	458.8	134.3	125.2	99.6	70.6	76.6	76.6	46.8	39.8	50.3
MEAN	2.31	2.66	14.8	4.33	4.32	3.21	2.35	2.47	2.55	1.51	1.28	1.68
MAX	2.5	3.0	87	6.4	5.6	4.0	2.6	2.8	3.2	1.8	1.5	1.9
MIN	2.0	2.3	3.0	3.6	3.8	2.3	2.2	2.2	1.8	1.3	1.1	1.3
AC-FT	142	158	910	266	248	198	140	152	152	93	79	100

CAL YR 1971 TOTAL 1,445.4 MEAN 3.96 MAX 87 MIN 1.6 AC-FT 2,870
WTR YR 1972 TOTAL 1,330.0 MEAN 3.63 MAX 87 MIN 1.1 AC-FT 2,640

NOTE.--No gage-height record Apr. 3 to May 4.

11044500 SANTA MARGARITA RIVER NEAR FALLBROOK, CALIF.

LOCATION.--Lat 33°23'54", long 117°15'44", in NE¼SE¼NE¼ sec.14, T.9 S., R.4 W., San Diego County, on right bank 180 ft upstream from De Luz Road, 1.3 miles northwest of Fallbrook, and 1.9 miles downstream from Sandia Canyon.

DRAINAGE AREA.--644 sq mi.

PERIOD OF RECORD.--October 1924 to current year. Monthly discharge only for October to November 1924, published in WSP 1315-B.

GAGE.--Water-stage recorder. Concrete-road control since October 1955. Datum of gage is 267.96 ft above mean sea level (levels by Bureau of Reclamation). Prior to Oct. 1, 1955, at site 1.7 miles upstream at different datum. Records equivalent except those for extreme low flows.

AVERAGE DISCHARGE.--24 years (1924-48), 35.4 cfs (25,630 acre-ft per year); median of yearly mean discharges, 17 cfs (12,300 acre-ft per year); 24 years (1948-72), 12.6 cfs (9,130 acre-ft per year); median of yearly mean discharges, 4.8 cfs (3,500 acre-ft per year).

EXTREMES.--Current year: Maximum discharge, 395 cfs Dec. 25 (gage height, 7.15 ft); no flow July 9 to Sept. 30.

Period of record: Maximum discharge, 33,100 cfs Feb. 16, 1927 (gage height, 15.6 ft, site and datum then in use), from rating curve extended above 8,800 cfs on basis of slope-area measurement of maximum flow; no flow at times in recent years.

REMARKS.--Records good. Flow partly regulated since November 1948 by Vail Lake (see sta 11042500). Several small diversions above station for irrigation. The Fallbrook Public Utility District reports no water pumped during the current year from a well in the streambed 2.1 miles upstream from the station.

REVISIONS.--Revised figures of discharge, in cubic feet per second, for the water year 1971, superseding figures published in WRD Calif. 1971, are given herewith:

DATE	DISCHARGE	DATE	DISCHARGE
1971		1971-Con.	
Sept. 22	0	Sept. 27	0.62
23	.17	28	.62
24	.22	29	.54
25	.27	30	.39
26	.46		

MONTH	CFS-DAYS	MEAN	MAX	MIN	AC-FT
September 1971	3,29	0.11	0.62	0	6.5
WTR YR 1971	1,650.57	4.52	153	0	3,270

DISCHARGE, IN CUBIC FEET PER SECOND, WATER YEAR OCTOBER 1971 TO SEPTEMBER 1972

DAY	OCT	NOV	DEC	JAN	FEB	MAR	APR	MAY	JUN	JUL	AUG	SEP
1	.62	2.2	3.0	15	6.6	7.0	3.1	2.1	.27	.35		
2	.54	2.2	2.9	12	6.5	6.6	2.9	2.0	.22	.35		
3	.22	2.1	3.2	10	6.4	6.3	2.8	2.0	.24	.27		
4	.10	2.0	3.7	9.1	6.5	6.5	2.9	2.0	.24	.24		
5	.09	2.2	3.5	7.9	8.0	6.6	2.7	2.0	.24	.22		
6	.09	2.3	3.3	7.9	8.6	6.5	2.5	2.0	.77	.18		
7	.09	2.5	3.7	7.9	7.8	6.5	2.4	2.0	2.6	.14		
8	.06	2.5	3.7	7.9	7.5	6.5	2.3	1.9	2.7	.03		
9	.07	2.4	3.5	7.9	7.6	6.5	2.3	1.8	2.2	0		
10	.10	2.7	3.3	7.8	7.3	6.0	2.3	1.6	1.8	0		
11	.22	2.7	3.4	7.6	7.5	5.9	2.5	1.5	1.3	0		
12	.14	2.7	3.7	7.4	7.3	5.7	2.5	1.4	.85	0		
13	.17	2.9	4.1	7.3	7.2	5.6	2.7	1.1	.68	0		
14	.22	2.9	4.1	7.2	7.4	5.3	2.8	.93	.44	0		
15	.49	2.9	4.1	6.8	7.6	5.2	2.8	.77	.35	0		
16	1.0	2.8	3.8	6.6	7.5	5.0	2.8	.85	.27	0		
17	1.7	2.8	3.6	6.6	7.3	5.1	2.8	.93	.35	0		
18	1.9	2.7	3.7	6.8	6.7	5.1	2.7	.93	.35	0		
19	1.7	2.6	3.7	6.8	6.5	4.8	2.7	1.4	.35	0		
20	1.7	2.4	4.0	6.8	6.5	4.8	2.7	1.7	.52	0		
21	1.6	2.5	4.1	6.8	6.4	4.8	2.5	1.6	.85	0		
22	1.4	2.7	8.2	6.8	6.5	4.6	2.5	1.4	1.5	0		
23	1.3	2.7	29	6.7	7.4	4.5	2.5	1.2	1.9	0		
24	1.6	2.7	27	6.8	7.9	4.2	2.5	1.3	1.7	0		
25	1.8	2.8	193	6.7	7.5	4.1	2.5	1.3	1.0	0		
26	2.0	2.8	118	7.2	6.9	4.1	2.4	1.2	1.0	0		
27	2.1	2.9	61	6.8	6.7	4.1	2.4	1.0	1.0	0		
28	2.2	2.9	153	6.5	6.5	3.7	2.2	.93	.68	0		
29	2.2	3.2	79	6.6	6.6	3.8	2.2	.85	.44	0		
30	2.1	3.1	31	6.8	------	3.6	2.1	.60	.44	0		
31	2.1	------	18	6.5	------	3.3	------	.44	------	0		------
TOTAL	31.62	78.8	793.3	237.5	206.7	162.3	77.0	42.73	27.25	1.78	0	0
MEAN	1.02	2.63	25.6	7.66	7.13	5.24	2.57	1.38	.91	.057	0	0
MAX	2.2	3.2	193	15	8.6	7.0	3.1	2.1	2.7	.35	0	0
MIN	.06	2.0	2.9	6.5	6.4	3.3	2.1	.44	.22	0	0	0
AC-FT	63	156	1,570	471	410	322	153	85	54	3.5	0	0

CAL YR 1971 TOTAL 1,694.29 MEAN 4.64 MAX 193 MIN 0 AC-FT 3,360
WTR YR 1972 TOTAL 1,658.98 MEAN 4.53 MAX 193 MIN 0 AC-FT 3,290

11046000 SANTA MARGARITA RIVER AT YSIDORA, CALIF.

LOCATION.--Lat 33°14'13", long 117°23'14", in NE¼SW¼NE¼ sec.10, T.11 S., R.5 W., San Diego County, on Camp Joseph H. Pendleton Naval Reservation, on left bank 1.7 miles upstream from mouth, and 2.0 miles southwest of Ysidora.

DRAINAGE AREA.--740 sq mi.

PERIOD OF RECORD.--February 1923 to current year.

GAGE.--Water-stage recorder. Datum of gage is 5.00 ft below mean sea level (U.S. Navy reference mark). See WSP 1735 for history of changes prior to Nov. 27, 1935. Nov. 27, 1935, to Feb. 25, 1970, at site 0.8 mile upstream at different datum.

AVERAGE DISCHARGE.--49 years, 27.8 cfs (20,140 acre-ft per year); median of yearly mean discharges, 6.9 cfs (5,000 acre-ft per year).

EXTREMES.--No flow during year.
Period of record: Maximum discharge, 33,600 cfs Feb. 16, 1927 (gage height, 18.00 ft, site and datum then in use), on basis of slope-area measurement of maximum flow; no flow for parts of most years.

REMARKS.--No flow since Aug. 2, 1970. Flow partly regulated by Vail Lake since November 1948 (see sta 11042500). Diversions for irrigation on Rancho California (formerly Santa Margarita Ranch and Pauba Ranch). Conservation pools, 0.9 mile upstream, detains low flow. Records of suspended-sediment loads for the current year are published in Part 2 of this report. AVERAGE DISCHARGE represents flow to ocean during period of record, regardless of upstream development.

11046100 LAS FLORES CREEK NEAR OCEANSIDE, CALIF.

LOCATION.--Lat 33°17'32", long 117°27'21", in NW¼SE¼ sec.24, T.10 S., R.6 W., San Diego County, Camp Joseph H. Pendleton Naval Reservation, on upstream side and at center of bridge on Atchison, Topeka, and Santa Fe Railway, 0.5 mile upstream from mouth, and 8.5 miles northwest of Oceanside.

DRAINAGE AREA.--26.6 sq mi.

PERIOD OF RECORD.--May 1951 to September 1967, October 1969 to current year.

GAGE.--Water-stage recorder and multiple concrete culvert control. Altitude of gage is 35 ft (from topographic map).

AVERAGE DISCHARGE.--19 years, 0.63 cfs (456 acre-ft per year); median of yearly mean discharges, 0.2 cfs (140 acre-ft per year).

EXTREMES.--Current year: Maximum discharge, 1.1 cfs Dec. 28 (gage height, 0.32 ft); no flow Oct. 6, June 24-30, July 2 to Sept. 30.

Period of record: Maximum discharge, 960 cfs Jan. 16, 1952 (gage height, 4.75 ft), based on critical-depth determination of maximum flow; no flow for long periods in most years.

Flood of Feb. 25, 1969, reached a stage of 7.25 ft, from floodmarks (discharge, 4,200 cfs).

CORRECTIONS.--The maximum discharge for water year 1971 is 2.4 cfs Dec. 21 (gage height, 0.42 ft); the previously published figure was not the maximum.

REMARKS.--Records fair. Rising water from area, which bypasses the station 1,000 ft to the northwest, amounted to 305 acre-ft this year. No regulation above station. Some pumping above station for irrigation.

DISCHARGE, IN CUBIC FEET PER SECOND, WATER YEAR OCTOBER 1971 TO SEPTEMBER 1972

DAY	OCT	NOV	DEC	JAN	FEB	MAR	APR	MAY	JUN	JUL	AUG	SEP
1	.01	.01	.02	.02	.02	.01	.01	.01	.01	.01		
2	.01	.01	.02	.02	.02	.01	.01	.01	.01	0		
3	.01	.02	.02	.02	.02	.01	.01	.01	.01	0		
4	.01	.02	.02	.01	.01	.01	.01	.01	.01	0		
5	.01	.02	.02	.02	.03	.01	.01	.01	.01	0		
6	0	.02	.02	.02	.02	.01	.01	.01	.01	0		
7	.01	.02	.03	.02	.02	.01	.01	.01	.01	0		
8	.01	.02	.02	.02	.02	.01	.01	.01	.01	0		
9	.01	.02	.02	.02	.02	.01	.01	.01	.01	0		
10	.01	.02	.02	.02	.02	.01	.01	.01	.01	0		
11	.01	.02	.02	.02	.02	.01	.01	.01	.01	0		
12	.01	.02	.02	.02	.02	.01	.01	.01	.01	0		
13	.01	.02	.03	.02	.02	.01	.01	.01	.01	0		
14	.01	.03	.02	.02	.02	.01	.01	.01	.01	0		
15	.01	.02	.02	.02	.02	.01	.01	.01	.01	0		
16	.02	.02	.02	.02	.02	.01	.01	.01	.01	0		
17	.01	.01	.02	.02	.02	.01	.01	.01	.01	0		
18	.01	.01	.02	.02	.02	.01	.01	.01	.01	0		
19	.01	.01	.02	.02	.01	.01	.01	.01	.01	0		
20	.01	.01	.02	.02	.01	.01	.01	.02	.01	0		
21	.01	.01	.03	.01	.01	.01	.01	.01	.01	0		
22	.01	.01	.07	.01	.01	.01	.01	.01	.01	0		
23	.02	.01	.03	.01	.01	.01	.01	.01	.01	0		
24	.02	.02	.39	.01	.01	.01	.01	.01	0	0		
25	.01	.01	.13	.01	.01	.01	.01	.01	0	0		
26	.01	.01	.04	.01	.01	.01	.01	.01	0	0		
27	.02	.02	.09	.01	.01	.01	.01	.01	0	0		
28	.02	.02	.26	.01	.01	.01	.01	.01	0	0		
29	.01	.02	.03	.02	.01	.01	.01	.01	0	0		
30	.01	.02	.03	.02	------	.01	.01	.01	0	0		
31	.01	------	.02	.01	------	.01	------	.01	------	0		------
TOTAL	.35	.50	1.54	.52	.47	.31	.30	.32	.23	.01	0	0
MEAN	.011	.017	.050	.017	.016	.010	.010	.010	.008	.0003	0	0
MAX	.02	.03	.39	.02	.03	.01	.01	.02	.01	.01	0	0
MIN	0	.01	.02	.01	.01	.01	.01	.01	0	0	0	0
AC-FT	.7	1.0	3.1	1.0	.9	.6	.6	.6	.5	.02	0	0

CAL YR 1971 TOTAL 6.86 MEAN .019 MAX .39 MIN 0 AC-FT 14
WTR YR 1972 TOTAL 4.55 MEAN .012 MAX .39 MIN 0 AC-FT 9.0

PEAK DISCHARGE (BASE, 100 CFS).--No peak above base.

11046550 SAN JUAN CREEK AT SAN JUAN CAPISTRANO, CALIF.

LOCATION.--Lat 33°29'30", long 117°39'44", in SW¼SE¼NE¼ sec.12, T.8 S., R.8 W., Orange County, on left bank at Camino Capistrano bridge, 0.2 mile upstream from Arroyo Trabuco, and 0.6 mile south of San Juan Capistrano.

DRAINAGE AREA.--117 sq mi.

PERIOD OF RECORD.--October 1969 to current year.

GAGE.--Water-stage recorder. Altitude of gage is 59.21 ft above mean sea level.

EXTREMES.--Current year: Maximum discharge, 88 cfs Dec. 28 (gage height, 3.90 ft); no flow at times.
Period of record: Maximum discharge, 135 cfs Dec. 19, 1970 (gage height, 3.85 ft); no flow at times in most years.
Flood of Feb. 25, 1969, 22,400 cfs, at site 2.8 miles upstream, as station 11046500.

REMARKS.--Records poor. No regulation above station. Capistrano Water Co. diverted 3.0 miles upstream. Various amounts of water reaches station as irrigation return flow and rising ground water. Data for San Juan Creek near San Juan Capistrano (11046500) previously collected at site 2.8 miles upstream was published as creek only and combined. Records of suspended-sediment discharge for the current year are published in Part 2 of this report.

COOPERATION.--Seven discharge measurements furnished by Orange County Flood Control District.

DISCHARGE, IN CUBIC FEET PER SECOND, WATER YEAR OCTOBER 1971 TO SEPTEMBER 1972

DAY	OCT	NOV	DEC	JAN	FEB	MAR	APR	MAY	JUN	JUL	AUG	SEP
1	.44	.15	.16	1.6	.23	.84	1.2	.50	.10			0
2	.44	.15	.33	1.5	.21	.86	1.2	.50	.10			0
3	.44	.15	.25	1.4	.20	.90	1.2	.50	.10			0
4	.44	.15	.20	1.3	.18	.92	1.2	.45	.10			0
5	.44	.15	.18	1.2	.17	.94	1.2	.45	.10			0
6	.44	.15	.17	1.2	.16	.96	1.1	.45	.10			.01
7	.50	.15	.17	1.1	.16	.98	1.1	.40	.10			.02
8	.38	.16	.17	1.1	.16	1.0	1.1	.35	.09			.02
9	.33	.16	.17	1.0	.17	1.0	1.1	.35	.09			.03
10	.25	.16	.17	1.0	.18	1.0	1.1	.35	.08			.03
11	.23	.16	.17	.90	.19	1.0	1.1	.30	.08			.04
12	.21	.16	.17	.86	.22	1.0	1.1	.30	.07			.04
13	.21	.16	.17	.80	.27	1.0	1.0	.30	.06			.05
14	.20	.16	.16	.74	.35	1.1	1.0	.25	.06			.06
15	.20	.16	.16	.70	.40	1.1	1.0	.25	.05			.07
16	.20	.16	.16	.64	.45	1.1	1.0	.25	.05			.08
17	.19	.16	.16	.60	.52	1.1	.90	.25	.04			.09
18	.19	.16	.16	.55	.54	1.1	.90	.20	.04			.10
19	.18	.16	.16	.50	.58	1.1	.90	.20	.03			.11
20	.18	.16	.16	.50	.62	1.1	.80	.20	.02			.12
21	.18	.16	.16	.50	.64	1.1	.80	.20	.01			.13
22	.17	.16	1.7	.45	.68	1.1	.80	.20	.01			.14
23	.17	.16	1.0	.40	.70	1.1	.80	.20	.01			.15
24	.17	.16	26	.40	.73	1.1	.70	.15	0			.16
25	.17	.16	11	.40	.76	1.1	.70	.15	0			.17
26	.16	.16	2.9	.35	.78	1.1	.70	.15	0			.18
27	.16	.16	12	.30	.80	1.1	.70	.15	0			.20
28	.16	.16	21	.30	.82	1.2	.60	.15	0			.22
29	.16	.16	3.7	.30	.82	1.2	.60	.15	0			.25
30	.16	.16	2.1	.25	------	1.2	.60	.15	0			.30
31	.16	------	1.8	.25	------	1.2	------	.15	------			------
TOTAL	7.91	4.73	86.96	23.09	12.69	32.60	28.20	8.60	1.49	0	0	2.77
MEAN	.26	.16	2.81	.74	.44	1.05	.94	.28	.050	0	0	.092
MAX	.50	.16	26	1.6	.82	1.2	1.2	.50	.10	0	0	.30
MIN	.16	.15	.16	.25	.16	.84	.60	.15	0	0	0	0
AC-FT	16	9.4	172	46	25	65	56	17	3.0	0	0	5.5

CAL YR 1971 TOTAL 525.83 MEAN 1.44 MAX 26 MIN 0 AC-FT 1,040
WTR YR 1972 TOTAL 209.04 MEAN .57 MAX 26 MIN 0 AC-FT 415

PEAK DISCHARGE (BASE, 200 CFS).--No peak above base.

NOTE.--Records for San Juan Creek near San Juan Capistrano (11046500) published in Water Resources Data for California, Part 1, 1970 and 1971, are in error. Data published as creek only is San Juan Creek at San Juan Capistrano (11046550) and the combined data is not meaningful.

11047000 ARROYO TRABUCO NEAR SAN JUAN CAPISTRANO, CALIF.

LOCATION.--Lat 33°31'36", long 117°40'08", in NE¼NE¼NW¼ sec.36, T.7 S., R.8 W., Orange County, on downstream side of right pier of county road bridge (formerly U.S. Highway 101), 1.8 miles north of San Juan Capistrano.

DRAINAGE AREA.--35.7 sq mi.

PERIOD OF RECORD.--October 1930 to current year. Prior to October 1956, published as Trabuco Creek near San Juan Capistrano.

GAGE.--Water-stage recorder. Altitude of gage is 180 ft (from topographic map). Since Mar. 20, 1969, supplementary water-stage recorder at site 0.3 mile upstream at different datum.

AVERAGE COMBINED DISCHARGE.--42 years, 5.57 cfs (4,040 acre-ft per year); median of yearly mean discharges, 0.5 cfs (360 acre-ft per year).

EXTREMES.--Current year: Maximum discharge, 46 cfs Dec. 28 (gage height, 2.39 ft); no flow most of year.
Period of record: Maximum discharge, 9,240 cfs Feb. 6, 1937; no flow at times in each year.

REMARKS.--Records poor. No regulation above station. Diversion to spreading grounds by Orange County Flood Control District, at site 0.8 mile upstream, began in February 1966. No diversion during year.

COOPERATION.--Records furnished by Orange County Flood Control District and reviewed by Geological Survey.

DISCHARGE, IN CUBIC FEET PER SECOND, WATER YEAR OCTOBER 1971 TO SEPTEMBER 1972

DAY	OCT	NOV	DEC	JAN	FEB	MAR	APR	MAY	JUN	JUL	AUG	SEP
1			0									
2			0									
3			0									
4			0									
5			0									
6			0									
7			0									
8			0									
9			0									
10			0									
11			0									
12			0									
13			0									
14			0									
15			0									
16			0									
17			0									
18			0									
19			0									
20			0									
21			0									
22			1.0									
23			0									
24			3.7									
25			3.0									
26			.68									
27			7.5									
28			10									
29			6.3									
30			0		------							
31		------	0		------		------		------			------
TOTAL	0	0	32.18	0	0	0	0	0	0	0	0	0
MEAN	0	0	1.04	0	0	0	0	0	0	0	0	0
MAX	0	0	10	0	0	0	0	0	0	0	0	0
MIN	0	0	0	0	0	0	0	0	0	0	0	0
AC-FT	0	0	64	0	0	0	0	0	0	0	0	0

CAL YR 1971 TOTAL 36.38 MEAN .10 MAX 10 MIN 0 AC-FT 72
WTR YR 1972 TOTAL 32.18 MEAN .088 MAX 10 MIN 0 AC-FT 64

11047200 OSO CREEK AT CROWN VALLEY PARKWAY, NEAR MISSION VIEJO, CALIF.

LOCATION.--Lat 33°33'29", long 117°40'33", in SE¼ sec.14, T.7 S., R.8 W., Orange County, on right upstream side of Crown Valley Parkway bridge, 2.7 miles south of Mission Viejo, and 4.0 miles north of San Juan Capistrano.

DRAINAGE AREA.--14.0 sq mi.

PERIOD OF RECORD.--December 1969 to current year.

GAGE.--Water-stage recorder. Altitude of gage is 250 ft (from topographic map).

EXTREMES.--Current year: Maximum discharge, 470 cfs Dec. 27 (gage height, 5.10 ft); no flow for many days. Period of record: Maximum discharge, 580 cfs Nov. 29, 1970 (gage height, 4.64 ft); no flow at times in each year.

REMARKS.--Records poor. No regulation or diversion above station.

COOPERATION.--Records furnished by Orange County Flood Control District and reviewed by Geological Survey.

DISCHARGE, IN CUBIC FEET PER SECOND, WATER YEAR OCTOBER 1971 TO SEPTEMBER 1972

DAY	OCT	NOV	DEC	JAN	FEB	MAR	APR	MAY	JUN	JUL	AUG	SEP
1	0	.26	.19	1.2	.70	.70	.56	.33	.33		0	.12
2	.04	.11	.04	.93	.78	.70	.56	.26	.41		0	.12
3	0	.04	5.2	.93	.78	.78	.56	.33	.48		0	.10
4	0	.04	2.2	.78	.60	.78	.48	.48	.41		.04	.10
5	0	0	1.0	.70	.60	.78	.48	.48	.48		1.1	.10
6	0	.11	.78	.70	7.5	.78	.41	.48	.85		.18	.10
7	0	.19	5.3	.70	1.0	.70	.33	.56	1.0		.18	.10
8	0	.33	.78	.70	.70	.70	.33	.41	.56		.08	.10
9	0	.26	.86	.78	.40	.63	.33	.41	.85		.08	.12
10	0	.33	.85	.78	.40	.63	.26	.33	.48		.06	.12
11	0	.04	.63	.78	.56	.63	.26	.26	.19		.10	.12
12	0	7.8	.56	.78	.48	.70	.33	.19	.11		.80	.10
13	0	1.2	2.3	.85	.48	.70	.70	.19	.04		.16	.10
14	.11	.78	.41	.26	.48	.70	.26	.11	.19		.10	.10
15	.19	.56	.26	.33	.48	.70	.11	.11	.26		.10	.06
16	13	.48	.11	.26	.48	.70	.11	.11	.19		.10	.06
17	2.9	.41	.19	.26	.48	.70	0	.11	.19		.06	.06
18	.63	.11	.26	.19	.56	.70	0	.11	.26		.10	.06
19	.70	.04	.26	.33	.56	.70	6.5	.70	.11		.10	.06
20	.26	0	.11	.93	.56	.63	.85	3.3	.26		.10	.06
21	.11	0	.04	1.5	.56	.70	.63	.70	2.4		.10	.06
22	.19	0	86	.85	.56	.70	.33	.33	.48		.10	.06
23	.04	0	2.4	.78	.56	.70	0	.33	.48		.10	.06
24	.04	0	204	.70	.63	.85	0	.33	.41		.10	.06
25	0	0	78	.63	.63	.78	.04	.41	.33		.10	.06
26	0	0	6.6	.63	.70	.70	.26	.33	.26		.10	.06
27	0	0	65	.63	.70	.63	.19	.48	.11		.10	.06
28	.11	0	32	.63	.70	.63	.26	.33	0		.10	.06
29	.11	.48	5.2	.70	.70	.56	.30	.26	0		.06	.06
30	.33	.48	2.9	.63	------	.56	.19	.33	0		.06	.06
31	.78	------	1.7	.78	------	.56	------	.33	------		.12	------
TOTAL	19.54	14.05	506.13	21.63	24.32	21.41	15.62	13.42	12.12	0	4.48	2.46
MEAN	.63	.47	16.3	.70	.84	.69	.52	.43	.40	0	.14	.082
MAX	13	7.8	204	1.5	7.5	.85	6.5	3.3	2.4	0	1.1	.12
MIN	0	0	.04	.19	.40	.56	0	.11	0	0	0	.06
AC-FT	39	28	1,000	43	48	42	31	27	24	0	8.9	4.9

CAL YR 1971 TOTAL 712.82 MEAN 1.95 MAX 204 MIN 0 AC-FT 1,410
WTR YR 1972 TOTAL 655.18 MEAN 1.79 MAX 204 MIN 0 AC-FT 1,300

11047500 ALISO CREEK AT EL TORO, CALIF.

LOCATION.--Lat 33°37'34", long 117°41'03", in Canada de los Alisos Grant, Orange County, near center of channel on upstream side of Second Street Bridge at El Toro.

DRAINAGE AREA.--7.91 sq mi.

PERIOD OF RECORD.--October 1930 to current year.

GAGE.--Water-stage recorder. Altitude of gage is 440 ft (from topographic map). Prior to July 1962, at different datum.

AVERAGE DISCHARGE.--42 years, 0.73 cfs (529 acre-ft per year); median of yearly mean discharges, 0.2 cfs (140 acre-ft per year).

EXTREMES.--Current year: Maximum discharge, 81 cfs Dec. 28 (gage height, 2.87 ft); no flow many days.
Period of record: Maximum discharge, 2,500 cfs Feb. 24, 1969 (gage height, 11.00 ft, from floodmark), from rating curve extended above 220 cfs on basis of slope-area measurement of maximum flow; no flow most of each year.

REMARKS.--Records poor. No regulation or diversion above station; some pumping from wells along stream. At times since 1964, Metropolitan Water District has wasted water to creek.

COOPERATION.--Records furnished by Orange County Flood Control District and reviewed by Geological Survey.

DISCHARGE, IN CUBIC FEET PER SECOND, WATER YEAR OCTOBER 1971 TO SEPTEMBER 1972

DAY	OCT	NOV	DEC	JAN	FEB	MAR	APR	MAY	JUN	JUL	AUG	SEP
1	.10	0	0	.30	.20	0	.10	0	0	0	.10	.10
2	.10	.20	.10	.40	.30	.10	.10	0	.10	0	.10	0
3	.10	0	.10	.30	.50	.10	.10	0	0	0	.10	0
4	.10	0	.10	.30	.30	.10	.10	0	0	0	.10	0
5	.10	.10	0	.80	.20	.10	0	0	0	0	.10	0
6	.10	0	0	.30	.10	.10	0	0	.10	0	.10	0
7	.10	0	0	.30	.20	.20	0	0	.10	0	.10	0
8	.10	0	0	.30	.20	.20	0	0	.10	0	.10	0
9	.10	0	0	.30	.20	.40	0	0	.10	0	.10	.10
10	.10	0	0	.30	.10	.10	0	0	0	0	.10	.10
11	.10	0	0	.30	2.6	.10	0	0	0	0	.10	.10
12	.10	.10	0	.30	1.8	.10	0	.10	0	0	.20	.20
13	.10	0	0	.20	1.0	.40	0	.10	.10	0	.10	.20
14	.10	0	0	.20	3.4	.20	0	0	.10	0	.10	.20
15	.10	0	0	.20	3.4	.20	0	.10	0	0	.10	.20
16	.20	.10	0	.10	2.6	.20	0	0	.10	0	.10	.10
17	.10	.10	.10	.10	1.0	.20	0	.10	.10	0	.10	.10
18	0	0	.10	.10	.20	.20	0	.10	0	0	0	.10
19	0	.10	.10	.10	.10	.20	.20	.10	.10	0	.10	.10
20	0	.10	.10	.10	.10	.20	0	0	0	0	.10	.20
21	0	.10	.10	.10	.10	.20	0	0	.10	0	.10	.10
22	0	.10	2.0	.10	.10	.10	0	0	.10	0	.10	.10
23	0	0	.10	.10	.10	.10	0	0	.10	0	.10	.10
24	0	.10	8.8	.10	.10	.30	0	0	.10	.10	.10	.10
25	0	.10	8.8	.10	.10	.20	0	0	.10	.10	.10	.10
26	0	.10	4.2	.10	.10	0	0	0	0	.10	.10	.10
27	0	0	21	.10	.10	.20	0	0	0	.10	0	.10
28	0	0	19	.20	.10	0	0	0	0	.10	.10	.10
29	0	0	.20	.20	.10	0	0	0	0	.10	.10	0
30	0	0	.20	.20	------	0	0	0	0	.10	0	.10
31	0	------	.60	.20	------	.10	------	0	------	.10	.10	------
TOTAL	1.80	1.30	65.70	6.80	19.40	4.60	.60	.60	1.50	.80	2.90	2.70
MEAN	.058	.043	2.12	.22	.67	.15	.020	.019	.050	.026	.094	.090
MAX	.20	.20	21	.80	3.4	.40	.20	.10	.10	.10	.20	.20
MIN	0	0	0	.10	.10	0	0	0	0	0	0	0
AC-FT	3.6	2.6	130	13	38	9.1	1.2	1.2	3.0	1.6	5.8	5.4

CAL YR 1971 TOTAL 77.20 MEAN .21 MAX 21 MIN 0 AC-FT 153
WTR YR 1972 TOTAL 108.70 MEAN .30 MAX 21 MIN 0 AC-FT 216

11048500 SAN DIEGO CREEK NEAR IRVINE, CALIF.

LOCATION.--Lat 33°40'20", long 117°47'10", in San Joaquin Grant, Orange County, on left bank 200 ft downstream from Jeffrey Road Bridge, and 1.5 miles west of Irvine.

DRAINAGE AREA.--40.3 sq mi.

PERIOD OF RECORD.--October 1949 to current year.

GAGE.--Water-stage recorder and concrete control. Datum of gage is 102.86 ft above mean sea level (levels by Orange County Flood Control District).

AVERAGE DISCHARGE.--23 years, 3.00 cfs (2,170 acre-ft per year); median of yearly mean discharges, 1.4 cfs (1,000 acre-ft per year).

EXTREMES.--Current year: Maximum discharge, 448 cfs Dec. 28 (gage height, 3.24 ft); no flow Jan. 4, 11-13, Feb. 7.
Period of record: Maximum discharge, 6,700 cfs Feb. 24, 1969 (gage height, 11.46 ft), from rating curve extended above 510 cfs on basis of slope-area measurements at gage heights 9.20 and 11.46 ft; no flow for long periods in most years.

REMARKS.--Records good. Pumping from wells along stream causes low-flow fluctuation in discharge.

COOPERATION.--Four discharge measurements furnished by Orange County Flood Control District.

DISCHARGE, IN CUBIC FEET PER SECOND, WATER YEAR OCTOBER 1971 TO SEPTEMBER 1972

DAY	OCT	NOV	DEC	JAN	FEB	MAR	APR	MAY	JUN	JUL	AUG	SEP
1	.52	.19	.52	.07	.40	1.4	1.6	3.3	2.8	3.3	1.8	1.8
2	.36	.30	.72	.07	.62	.72	1.3	3.3	3.0	3.0	1.4	2.0
3	.15	.44	1.6	.05	.72	1.6	1.3	3.3	3.7	3.3	1.3	2.0
4	.30	.09	2.0	0	.30	.84	1.4	2.5	3.7	3.7	1.6	1.6
5	.44	.12	.96	.24	.20	1.4	2.0	2.0	3.7	3.7	1.8	1.6
6	.24	.10	.96	.62	.10	1.8	.96	2.8	3.3	3.7	2.0	1.4
7	.19	.10	1.6	.12	0	1.1	.96	2.8	3.7	3.3	2.0	1.6
8	.44	.36	1.6	.03	.30	.96	.84	2.8	4.0	3.7	1.6	1.8
9	.52	.44	1.3	.01	.40	1.1	.96	3.0	3.0	3.7	1.8	2.3
10	.19	.44	1.1	.01	.70	1.4	.96	3.0	2.5	4.0	2.5	2.3
11	.19	.84	1.1	0	.30	.90	2.3	2.3	2.5	3.3	2.0	1.8
12	.30	.44	.96	0	.02	.50	1.4	2.0	1.6	2.8	4.4	.96
13	.12	.84	.96	0	.15	.50	2.0	2.0	1.6	4.0	2.0	.84
14	.36	.12	1.3	.01	.19	.50	1.8	3.0	2.8	4.0	2.8	.62
15	.44	.15	1.1	.09	.12	.50	2.3	2.5	4.0	4.8	1.8	.72
16	11	.07	1.1	.19	.30	.50	1.8	1.4	3.7	4.0	1.6	.96
17	2.8	.36	1.3	.96	.72	.20	2.5	3.0	3.7	4.0	1.8	.72
18	.52	.30	.72	2.5	.30	.20	2.3	2.8	3.7	4.0	.72	.96
19	.44	.24	1.4	2.0	.30	.20	2.8	2.8	2.3	4.0	.62	1.1
20	.52	.44	1.6	1.3	.96	.20	2.5	2.0	2.5	3.3	.96	.96
21	.19	.84	.52	.84	.62	.59	1.4	1.3	2.8	2.3	.96	.96
22	.07	.44	15	.62	.19	1.6	1.6	1.4	3.3	2.3	1.1	.62
23	.03	.96	6.1	.44	.52	2.8	.84	1.6	3.0	3.0	1.3	.72
24	.03	.84	64	.52	1.4	2.8	.96	2.5	2.5	3.0	1.6	.62
25	.12	.15	61	.40	1.4	.72	.96	2.5	2.3	3.0	2.0	.72
26	.44	.24	29	.30	1.3	1.1	2.0	2.5	2.5	2.5	1.4	.52
27	.15	.72	90	.30	1.3	1.4	1.4	3.0	3.7	2.8	1.8	.72
28	.15	.52	135	.30	1.8	.84	2.0	3.7	3.7	3.0	2.3	.96
29	.09	.44	14	.30	.52	1.3	3.7	3.7	3.7	2.8	1.6	1.4
30	.24	.44	3.3	.30	------	.52	4.0	3.3	3.3	2.8	1.6	1.3
31	.09	------	.15	.30	------	.44	------	3.0	------	3.0	1.8	------
TOTAL	21.64	11.97	441.97	12.89	16.15	30.63	52.84	81.1	92.6	104.1	53.96	36.58
MEAN	.70	.40	14.3	.42	.56	.99	1.76	2.62	3.09	3.36	1.74	1.22
MAX	11	.96	135	2.5	1.8	2.8	4.0	3.7	4.0	4.8	4.4	2.3
MIN	.03	.07	.15	0	0	.20	.84	1.3	1.6	2.3	.62	.52
AC-FT	43	24	877	26	32	61	105	161	184	206	107	73

CAL YR 1971 TOTAL 820.40 MEAN 2.25 MAX 135 MIN 0 AC-FT 1,630
WTR YR 1972 TOTAL 956.43 MEAN 2.61 MAX 135 MIN 0 AC-FT 1,900

PEAK DISCHARGE (BASE, 100 CFS)

DATE	TIME	G.H.	DISCHARGE	DATE	TIME	G.H.	DISCHARGE
12-24	1630	2.55	195	12-28	1145	3.24	448
12-27	1645	2.94	326				

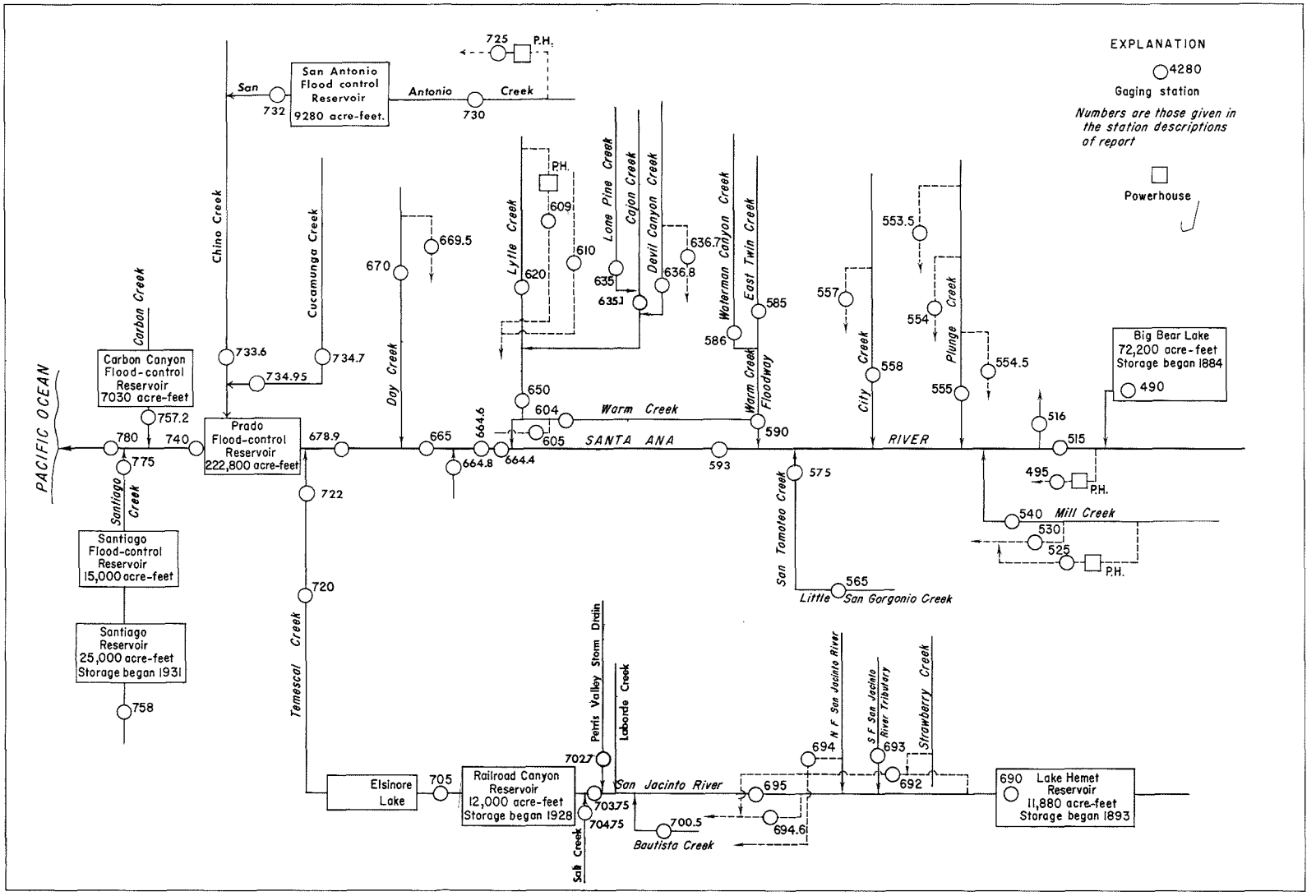

Figure 3.-- Schematic diagram showing diversions and storage in Santa Ana River basin.

11049000 BIG BEAR LAKE NEAR BIG BEAR LAKE, CALIF.

LOCATION.--Lat 34°14'33", long 116°58'33", in SW¼ sec.22, T.2 N., R.1 W., San Bernardino County, at Big Bear Lake Dam on Bear Creek, 4 miles west of town of Big Bear Lake, and 7.5 miles upstream from mouth.

DRAINAGE AREA.--71.5 sq mi.

PERIOD OF RECORD.--October 1950 to current year in reports of Geological Survey. February 1884 to September 1950 in files of Bear Valley Mutual Water Co.

GAGE.--Nonrecording gage. Datum of gage is 6,670.9 ft above mean sea level (levels by Bear Valley Mutual Water Co.). Prior to 1912 at old dam 200 ft upstream at same datum (spillway at gage height, 52.4 ft).

EXTREMES.--Current year: Maximum contents observed, 62,120 acre-ft Jan. 31; minimum contents, 52,430 acre-ft Sept. 30.

Period of record: Maximum contents unknown, lake spilled in 1916, 1917, 1922, 1923, 1938, 1939, 1969, 1970; lake dry October, November 1898, August to November 1899, October, November 1904.

REMARKS.--Lake is formed by multiple-arch concrete dam, completed in 1912, replacing existing lower dam built in 1884; storage began in spring of 1884. Capacity, 72,200 acre-ft at elevation 6,743.2 ft (top of dam). Capacity table based on survey made in 1883. No dead storage. Water used for irrigation only. See schematic diagram of Santa Ana River basin.

COOPERATION.--Record of contents furnished by Bear Valley Mutual Water Co.

MONTHEND CONTENTS, WATER YEAR OCTOBER 1971 TO SEPTEMBER 1972

Date	Contents (acre-feet)	Change in contents (acre-feet)
Sept. 30	56,640	-
Oct. 31	56,220	-420
Nov. 30	56,220	0
Dec. 31	62,120	+5,900
CAL YR 1971	-	+640
Jan. 31	62,120	0
Feb. 29	61,910	-210
Mar. 31	61,700	-210
Apr. 30	60,850	-850
May 31	60,220	-630
June 30	59,170	-1,050
July 31	57,060	-2,110
Aug. 31	54,540	-2,520
Sept. 30	52,430	-2,110
WTR YR 1972	-	-4,210

11051500 SANTA ANA RIVER NEAR MENTONE, CALIF.

LOCATION.--Lat 34°06'30", long 117°05'59", in NE¼SW¼SW¼ sec.4, T.1 S., R.2 W., San Bernardino County, on right bank at diversion near mouth of canyon, 1.6 miles upstream from Mill Creek, and 3.2 miles northeast of Mentone.

DRAINAGE AREA.--209 sq mi (including area tributary to Baldwin Lake at head of Bear Valley).

PERIOD OF RECORD.--July 1896 to current year. Prior to October 1914, observed records not equivalent owing to Greenspot pipeline diversion between sites and exclusion of discharge from Warm Springs Canyon. Monthly discharge only for January 1910, January, February 1916, published in WSP 1315-B.

GAGE.--Water-stage recorder on river; water-stage recorder on powerhouse diversion. Altitude of gage is 1,950 ft (from topographic map). Prior to Sept. 2, 1917, nonrecording gages at several sites within 1.5 miles upstream at various datums. Sept. 3, 1917, to May 27, 1969, water-stage recorder at site 0.2 mile upstream at different datum.

AVERAGE DISCHARGE (River only).--58 years (1914-72), 33.3 cfs (24,130 acre-ft per year); median of yearly mean discharges, 11 cfs (8,000 acre-ft per year).

(Combined river and canal).--76 years, 81.5 cfs (59,050 acre-ft per year); median of yearly mean discharges, 65 cfs (47,100 acre-ft per year).

EXTREMES (River only).--Current year: Maximum discharge, 1,970 cfs Dec. 24 (gage height, 6.20 ft); no flow July 28 to Aug. 4.

Period of record: Maximum discharge, 52,300 cfs Mar. 2, 1938 (gage height, 14.3 ft, site and datum then in use), on basis of slope-area measurement of maximum flow; no flow at times in some years.

(Combined flow).-- Current year: Maximum discharge, 1,970 cfs Dec. 24; minimum daily, 19 cfs July 5, 12-15.

Period of Record: Maximum discharge, 52,300 cfs Mar, 2, 1938; minimum daily, 7.4 cfs Sept. 21, 1971.

Flood of Feb. 23, 1891, 53,700 cfs, from notes furnished by F. C. Finkle, consulting engineer, Los Angeles.

REMARKS.--Records poor. Flow partly regulated by Big Bear Lake (see sta 11049000). For records of combined discharge of Santa Ana River and Southern California Edison Co.'s canal below powerplant No. 2, which diverts above station, see following page. Bear Valley Mutual Water Company pumped 1,135 acre-ft into canal below canal gage. Prior to Oct. 1, 1952, pumped water entered canal above gage. See schematic diagram of Santa Ana River basin.

COOPERATION.--Eleven discharge measurements on Southern California Edison Co.'s canal below powerplant No. 2 furnished by that agency, in connection with a Federal Power Commission project.

DISCHARGE, IN CUBIC FEET PER SECOND, WATER YEAR OCTOBER 1971 TO SEPTEMBER 1972

DAY	OCT	NOV	DEC	JAN	FEB	MAR	APR	MAY	JUN	JUL	AUG	SEP
1	2.8	3.8	3.1	83	6.4	2.6	3.1	2.0	4.7	.30	0	.16
2	2.8	3.6	3.3	73	6.7	2.4	2.9	2.0	4.4	.30	0	.16
3	2.8	3.6	3.6	67	6.7	2.2	2.9	2.0	4.4	.30	0	.20
4	2.8	3.6	3.3	54	6.7	2.0	2.9	2.1	3.7	.30	0	.16
5	2.8	3.6	3.2	46	6.7	1.7	2.9	2.2	2.5	.30	.60	.09
6	2.7	3.6	3.1	46	6.7	1.8	2.9	3.3	4.6	.25	.20	.12
7	2.7	3.5	3.1	45	6.7	1.9	2.9	3.4	6.1	.20	.20	.12
8	2.7	3.5	3.7	48	6.4	1.9	2.8	3.5	4.1	.20	.20	.12
9	2.7	3.5	5.6	44	6.4	1.9	2.8	3.2	3.2	.16	.25	.12
10	2.7	3.5	6.5	40	6.4	1.9	2.7	2.9	2.6	.12	.49	.12
11	2.6	3.5	2.5	40	6.4	1.9	3.0	2.9	2.1	.09	1.2	.09
12	2.6	3.4	2.6	31	6.4	1.9	3.0	2.9	2.1	.09	.63	.12
13	2.6	3.4	3.1	15	6.4	1.9	3.8	2.6	1.4	.09	.56	.09
14	2.6	3.4	2.7	12	6.4	1.9	3.6	2.8	1.4	.06	.56	.09
15	2.6	3.4	2.6	10	6.4	1.8	3.2	2.8	1.1	.06	.49	2.4
16	2.5	3.4	2.5	9.6	6.4	1.9	2.8	2.8	.97	.06	.42	19
17	2.5	3.3	2.6	9.1	6.4	2.1	3.0	2.8	.97	.06	.36	18
18	2.5	3.3	2.5	8.8	6.4	2.6	5.3	3.4	1.4	.04	.36	18
19	2.5	3.3	2.5	8.4	6.4	3.1	6.4	5.1	1.1	.04	.36	19
20	2.5	3.2	2.4	8.1	6.4	3.3	5.1	6.0	.97	.03	.30	20
21	2.4	3.2	2.5	7.8	5.3	3.5	3.8	5.1	1.4	.02	.25	20
22	2.4	3.2	133	7.5	4.5	3.7	3.2	4.3	.97	.02	.20	20
23	2.4	3.0	115	7.3	3.7	3.9	2.8	3.8	.88	.01	.20	21
24	4.0	3.1	986	7.0	3.6	2.9	2.6	3.4	.79	.01	.25	22
25	3.7	3.2	1,420	6.8	3.4	2.6	2.6	3.4	.63	.01	.49	24
26	3.4	3.2	315	6.6	3.3	2.6	1.6	1.6	.56	.01	.56	24
27	3.3	3.2	200	6.4	3.2	2.9	1.9	.11	.49	.01	.63	23
28	3.2	3.2	150	6.3	3.0	3.7	2.0	1.2	.42	.01	.56	23
29	3.1	3.1	130	6.2	2.8	3.7	2.1	1.2	.36	0	.56	23
30	4.5	3.1	120	6.1	------	3.3	2.0	1.2	.36	0	.02	22
31	4.0	------	100	6.0	------	3.2	------	4.0	------	0	.14	------
TOTAL	89.4	100.9	3,736.0	772.0	162.6	78.7	92.6	90.01	60.67	3.15	11.04	320.16
MEAN	2.88	3.36	121	24.9	5.61	2.54	3.09	2.90	2.02	.10	.36	10.7
MAX	4.5	3.8	1,420	83	6.7	3.9	6.4	6.0	6.1	.30	1.2	24
MIN	2.4	3.0	2.4	6.0	2.8	1.7	1.6	.11	.36	0	0	.09
AC-FT	177	200	7,410	1,530	323	156	184	179	120	6.3	22	635

CAL YR 1971 TOTAL 8,967.10 MEAN 24.6 MAX 1,420 MIN 2.1 AC-FT 17,790
WTR YR 1972 TOTAL 5,517.23 MEAN 15.1 MAX 1,420 MIN 0 AC-FT 10,940

PEAK DISCHARGE (BASE, 150 CFS)

DATE	TIME	G.H.	DISCHARGE	DATE	TIME	G. H.	DISCHARGE
12-22	2300	3.60	424	12-25	1600	5.95	1,800
12-24	1800	6.20	1,970	12-27	1700	2.91	313

11051500 SANTA ANA RIVER NEAR MENTONE, CALIF.--Continued

COMBINED DISCHARGE, IN CUBIC FEET PER SECOND, OF SANTA ANA RIVER AND SOUTHERN CALIFORNIA EDISON CO.'S CANAL NEAR MENTONE, CALIF., WATER YEAR OCTOBER 1971 TO SEPTEMBER 1972

DAY	OCT	NOV	DEC	JAN	FEB	MAR	APR	MAY	JUN	JUL	AUG	SEP
1	22	26	26	84	46	32	32	25	25	20	23	35
2	22	25	25	74	46	31	31	25	24	20	24	35
3	27	26	28	68	42	31	31	25	24	20	24	39
4	23	26	27	54	41	31	31	25	26	20	26	40
5	21	26	25	46	42	31	30	25	28	19	39	41
6	21	26	26	46	42	30	30	26	34	20	42	43
7	21	26	25	45	40	32	30	26	34	20	43	31
8	21	26	22	48	39	32	29	28	31	20	42	40
9	21	26	26	44	39	32	29	27	30	20	47	42
10	21	26	28	42	39	32	29	26	29	20	50	43
11	21	26	26	41	39	31	31	26	27	20	50	43
12	21	31	25	43	38	31	30	25	26	19	45	41
13	21	28	30	49	37	32	32	24	24	19	44	36
14	21	27	25	53	37	32	32	23	25	19	43	34
15	22	26	25	51	38	31	30	23	25	19	41	24
16	26	26	24	51	37	30	29	25	24	25	41	23
17	26	26	26	49	37	30	29	25	23	28	39	22
18	26	26	26	48	36	31	34	26	23	28	37	22
19	24	26	26	47	36	31	35	29	23	28	36	23
20	24	26	25	46	36	31	32	31	23	28	37	25
21	24	26	26	46	35	32	31	29	27	28	39	24
22	24	26	148	46	36	32	29	28	26	26	39	24
23	24	26	116	45	36	34	29	27	26	26	40	25
24	28	26	987	44	35	34	28	26	25	25	42	26
25	28	26	1,420	43	35	33	28	26	25	25	42	28
26	26	26	316	44	34	33	26	24	24	25	44	28
27	27	26	201	41	34	33	26	22	22	24	45	27
28	28	26	151	41	34	34	26	22	22	24	46	27
29	25	26	131	41	34	34	26	22	20	24	44	29
30	26	26	121	40	------	33	26	22	20	24	36	28
31	26	------	101	40	------	32	------	20	------	25	35	------
TOTAL	738	787	4,234	1,500	1,100	988	891	783	765	708	1,225	948
MEAN	23.8	26.2	137	48.4	37.9	31.9	29.7	25.3	25.5	22.8	39.5	31.6
MAX	28	31	1,420	84	46	34	35	31	34	28	50	43
MIN	21	25	22	40	34	30	26	20	20	19	23	22
AC-FT	1,460	1,560	8,400	2,980	2,180	1,960	1,770	1,550	1,520	1,400	2,430	1,880

CAL YR 1971 TOTAL 15,824.4 MEAN 43.4 MAX 1,420 MIN 7.4 AC-FT 31,390
WTR YR 1972 TOTAL 14,667.0 MEAN 40.1 MAX 1,420 MIN 19 AC-FT 29,090

PEAK DISCHARGE (BASE, 150 CFS)

DATE	TIME	DISCHARGE	DATE	TIME	DISCHARGE
12-22	2300	439	12-25	1600	1,800
12-24	1800	1,970	12-27	1700	313

11051600 SANTA ANA RIVER SPREADING DIVERSION NEAR MENTONE, CALIF.

LOCATION.--Lat 34°06'12", long 117°06'37", in SW¼NW¼NE¼ sec.8, T.1 S., R.2 W., San Bernardino County, on diversion channel 0.8 mile downstream from Southern California Edison Co.'s powerhouse No. 3, and 2.4 miles northeast of Mentone.

PERIOD OF RECORD.--October 1951 to current year.

GAGE.--Water-stage recorder and Parshall flume control. Altitude of gage is 840 ft (from topographic map).

EXTREMES.--Period of record: Maximum daily discharge, 129 cfs Mar. 1, 1970; no flow for long periods in each year.

REMARKS.--Records good. Water is diverted from Santa Ana River at diversion dam 0.8 mile upstream, for spreading on debris cone downstream from mouth of Santa Ana River Canyon. Diversion began prior to 1951.

DISCHARGE, IN CUBIC FEET PER SECOND, WATER YEAR OCTOBER 1971 TO SEPTEMBER 1972

DAY	OCT	NOV	DEC	JAN	FEB	MAR	APR	MAY	JUN	JUL	AUG	SEP
1			0	24	6.8		0	0	1.8			0
2			0	25	12		0	0	.60			0
3			0	29	11		0	0	0			0
4			0	38	11		0	0	0			0
5			0	38	11		0	0	0			0
6			0	38	11		0	0	1.8			0
7			0	29	8.1		0	0	3.0			0
8			0	22	7.2		0	0	.92			0
9			0	23	7.6		0	0	0			0
10			0	29	7.6		0	0	0			0
11			0	24	6.6		0	0	0			0
12			0	25	6.2		0	0	0			0
13			0	24	5.6		0	0	0			0
14			0	24	5.2		0	0	0			0
15			0	25	5.2		0	0	0			.10
16			0	24	5.2		0	0	0			3.4
17			0	22	5.2		0	0	0			0
18			0	21	5.2		.31	0	0			0
19			0	21	5.2		.50	0	0			0
20			0	21	4.7		0	0	0			0
21			0	19	2.6		0	0	0			0
22			19	19	0		0	0	0			0
23			31	20	0		0	0	0			0
24			21	21	0		0	0	0			0
25			15	21	0		0	0	0			0
26			14	21	0		0	0	0			0
27			8.5	20	0		0	0	0			0
28			.30	19	0		0	0	0			0
29			.09	19	0		0	0	0			0
30			.67	16	------		0	0	0			0
31		------	15	8.3	------		------	.73	------			------
TOTAL	0	0	124.56	729.3	150.2	0	.81	.73	8.12	0	0	3.50
MEAN	0	0	4.02	23.5	5.18	0	.027	.024	.27	0	0	.12
MAX	0	0	31	38	12	0	.50	.73	3.0	0	0	3.4
MIN	0	0	0	8.3	0	0	0	0	0	0	0	0
AC-FT	0	0	247	1,450	298	0	1.6	1.5	16	0	0	6.9

CAL YR 1971 TOTAL 2,323.98 MEAN 6.37 MAX 52 MIN 0 AC-FT 4,610
WTR YR 1972 TOTAL 1,017.22 MEAN 2.78 MAX 38 MIN 0 AC-FT 2,020

11054000 MILL CREEK NEAR YUCAIPA, CALIF.

LOCATION.--Lat 34°05'27", long 117°02'12", in NW¼NE¼NE¼ sec.13, T.1 S., R.2 W., San Bernardino County, on left bank 50 ft downstream from bridge on State Highway 190-D, 3.9 miles north of Yucaipa, and 5.3 miles upstream from mouth.

DRAINAGE AREA.--42.4 sq mi.

PERIOD OF RECORD.--January 1919 to September 1938, October 1947 to current year. Monthly figures only for April and May 1923, published in WSP 1315-B. Prior to October 1954, published as "near Craftonville."

GAGE.--Water-stage recorder on creek; water-stage recorder and sharp-crested weir on power canal No. 1; water-stage recorder and Parshall flume on power canals Nos. 2 and 3. Datum of gage is 2,916.36 ft above mean sea level (Southern California Edison Co. bench mark). See WSP 1735 for history of changes prior to Mar. 2, 1938.

AVERAGE DISCHARGE (Creek only).--44 years, 13.6 cfs (9,850 acre-ft per year); median of yearly mean discharges, 1.4 cfs (1,000 acre-ft per year).

(Combined creek and canals).--44 years, 34.4 cfs (24,920 acre-ft per year); median of yearly mean discharges, 21 cfs (15,200 acre-ft per year).

EXTREMES (Creek only).--Current year: Maximum discharge, 266 cfs June 6 (gage height, 8.27 ft); no flow for many days.

Period of record: Maximum discharge, 35,400 cfs Jan. 25, 1969 (gage height, 16.8 ft, from floodmark), from rating curve extended above 1,100 cfs on basis of 2 field estimates at gage height 14.5 ft and slope-area measurement of maximum flow; no flow at times in some years.

(Combined flow).--Current year: Maximum discharge, 283 cfs June 6; minimum daily, 13 cfs Dec. 28, Sept. 21-23, 29, 30.

Period of record: Maximum discharge, 35,400 cfs Jan. 25, 1969; minimum daily, 2.7 cfs Feb. 23, 1949.

REMARKS.--Records fair. No regulation above station. Mill Creek power canals Nos. 1, 2, and 3 divert from points 100 ft, 3 miles, and 6 miles above station, respectively. Combined flow of Mill Creek and Mill Creek power canals Nos. 1, 2, and 3 is given on following page. See schematic diagram of Santa Ana River basin.

COOPERATION.--Water-stage recorder graph and 10 discharge measurements for Mill Creek power canals Nos. 2 and 3 furnished by Southern California Edison Co. in connection with a Federal Power Commission project.

DISCHARGE, IN CUBIC FEET PER SECOND, WATER YEAR OCTOBER 1971 TO SEPTEMBER 1972

DAY	OCT	NOV	DEC	JAN	FEB	MAR	APR	MAY	JUN	JUL	AUG	SEP
1	0	1.0	.31	3.6	.65	1.9	.05	.31	0	.16	.09	
2	0	1.0	.25	3.4	.57	1.8	.05	.31	0	.09	.06	
3	0	1.1	.31	3.1	.37	1.0	.04	.31	0	.04	.02	
4	0	1.1	.31	3.0	.31	1.0	.04	.31	0	.04	.02	
5	0	1.1	.25	2.8	.25	1.0	.04	.25	0	.02	.02	
6	0	1.2	.20	2.7	.12	1.0	.04	.25	7.9	.01	.02	
7	0	1.1	.37	2.6	.09	.10	.04	.25	2.0	.01	.01	
8	0	1.1	.31	2.8	.09	.10	.04	.31	1.5	.01	0	
9	0	1.2	.25	2.9	.09	.10	.04	.31	1.0	.01	0	
10	0	1.1	.25	3.3	.12	.10	.09	.37	.10	0	0	
11	0	.80	.25	3.5	.12	.10	.12	.37	.08	0	0	
12	0	.20	.31	3.5	.12	.10	.12	.37	.08	0	0	
13	0	.20	.43	2.8	.12	.10	.09	.25	.06	0	0	
14	0	.20	.37	2.2	.12	.10	.09	.20	.06	0	0	
15	.01	.20	.37	2.0	.12	.10	.09	.16	.02	0	.32	
16	.02	.25	.31	1.7	.09	.10	.09	.12	.06	0	.53	
17	.60	.20	.37	1.7	.09	.12	.09	.12	.04	0	.02	
18	.60	.20	.31	1.7	.37	.12	.09	.12	.04	0	.02	
19	.10	.20	.31	2.0	.37	.12	1.4	.12	.01	0	.01	
20	.01	.31	.31	2.2	.37	.12	.09	.09	.01	0	.01	
21	.01	.31	.37	2.5	.37	.12	.60	.04	1.0	0	0	
22	.01	.25	7.9	2.6	.37	.12	.13	0	.01	0	0	
23	.01	.31	6.1	2.8	.37	.12	.09	0	.01	0	0	
24	.50	.37	50	2.8	.31	.10	.09	0	.01	0	0	
25	1.3	.37	74	1.5	.31	.10	.12	0	.20	0	0	
26	1.2	.31	28	.70	.25	.08	.12	0	.20	0	0	
27	1.0	.31	11	.70	.25	.08	.12	0	.20	0	0	
28	1.2	.31	6.0	.70	.25	.07	.16	0	.20	0	0	
29	.90	.43	5.0	.70	.20	.07	.20	0	.20	0	0	
30	.90	.43	4.4	.70	------	.06	.31	0	.20	.03	0	
31	.90	------	4.0	.65	------	.06	------	0	------	.11	0	------
TOTAL	9.27	17.16	202.92	69.85	7.23	10.16	4.68	4.94	15.19	.53	1.15	0
MEAN	.30	.57	6.55	2.25	.25	.33	.16	.16	.51	.017	.037	0
MAX	1.3	1.2	74	3.6	.65	1.9	1.4	.37	7.9	.16	.53	0
MIN	0	.20	.20	.65	.09	.06	.04	0	0	0	0	0
AC-FT	18	34	402	139	14	20	9.3	9.8	30	1.1	2.3	0

CAL YR 1971 TOTAL 429.68 MEAN 1.18 MAX 74 MIN 0 AC-FT 852
WTR YR 1972 TOTAL 343.08 MEAN .94 MAX 74 MIN 0 AC-FT 681

PEAK DISCHARGE (BASE, 100 CFS).--Dec. 24 (1930) 235 cfs (8.13 ft); June 6 (1400) 266 cfs (8.27 ft).

11054000 MILL CREEK NEAR YUCAIPA, CALIF.--Continued

COMBINED DISCHARGE, IN CUBIC FEET PER SECOND, OF MILL CREEK AND MILL CREEK POWER CANALS NOS. 1, 2, AND 3 NEAR YUCAIPA, CALIF., WATER YEAR OCTOBER 1971 TO SEPTEMBER 1972

DAY	OCT	NOV	DEC	JAN	FEB	MAR	APR	MAY	JUN	JUL	AUG	SEP
1	16	17	17	16	20	20	21	19	17	16	15	14
2	16	17	17	15	19	20	21	19	17	16	15	14
3	16	18	17	19	19	18	20	19	17	16	15	15
4	16	18	17	20	19	15	20	19	17	16	15	14
5	16	18	17	20	19	16	20	19	17	16	15	14
6	16	18	17	19	19	16	19	19	25	16	16	14
7	16	18	16	20	17	17	19	19	18	16	16	14
8	16	18	16	19	18	18	19	19	16	16	15	14
9	16	18	17	20	18	17	19	19	18	16	15	14
10	16	17	16	20	18	19	19	18	17	16	15	14
11	15	17	17	20	18	20	20	18	17	16	15	14
12	15	17	17	22	18	19	20	18	17	15	16	14
13	15	17	17	22	17	20	19	19	17	15	16	14
14	15	17	17	22	17	20	19	19	17	15	16	14
15	15	17	17	22	17	18	19	19	17	15	16	14
16	18	17	17	22	17	19	19	19	17	15	15	14
17	16	17	17	22	17	20	19	19	17	15	16	14
18	16	17	17	20	17	18	18	19	17	15	16	14
19	16	17	17	19	17	18	17	20	17	15	16	14
20	16	17	17	19	17	19	19	18	17	15	16	14
21	17	17	17	20	19	20	19	18	14	15	16	13
22	17	17	19	20	19	20	18	18	17	15	15	13
23	17	17	16	20	20	20	18	18	18	15	15	13
24	17	17	57	20	21	20	18	18	17	15	15	14
25	16	17	80	20	20	20	18	18	17	15	15	14
26	17	17	34	20	20	20	17	18	17	15	15	14
27	20	17	17	20	20	20	18	18	17	15	15	14
28	17	15	13	20	19	20	18	18	16	15	15	14
29	17	15	14	20	20	20	18	17	16	15	15	13
30	17	16	17	20	------	22	18	18	16	15	14	13
31	17	------	17	20	------	22	------	18	------	15	14	------
TOTAL	506	512	638	618	536	591	566	574	514	476	474	416
MEAN	16.3	17.1	20.6	19.9	18.5	19.1	18.9	18.5	17.1	15.4	15.3	13.9
MAX	20	18	80	22	21	22	21	20	25	16	16	15
MIN	15	15	13	15	17	15	17	17	14	15	14	13
AC-FT	1,000	1,020	1,270	1,230	1,060	1,170	1,120	1,140	1,020	944	940	825

CAL YR 1971 TOTAL 6,842 MEAN 18.7 MAX 80 MIN 11 AC-FT 13,570
WTR YR 1972 TOTAL 6,421 MEAN 17.5 MAX 80 MIN 13 AC-FT 12,740

PEAK DISCHARGE (BASE, 100 CFS).--Dec. 24 (1930) 241 cfs; June 6 (1400) 283 cfs.

11055500 PLUNGE CREEK NEAR EAST HIGHLANDS, CALIF.

LOCATION.--Lat 34°07'06", long 117°08'27", in SW¼NE¼NE¼ sec.1, T.1 S., R.3 W., San Bernardino County, on left bank at mouth of canyon at crossing of North Fork ditch siphon, 1.8 miles northeast of East Highlands.

DRAINAGE AREA.--16.9 sq mi.

PERIOD OF RECORD.--January 1919 to current year; combined records of creek and diversions, March 1951 to current year.

GAGE.--Water-stage recorder in concrete shelter; water-stage recorder and weir on upper diversion; water-stage recorder and concrete-lined canal on middle diversion; crest-stage gage and sharp-crested weir on lower diversion. Altitude of gage is 1,590 ft (from topographic map). Prior to Oct. 1, 1969, at datum 4.00 ft higher.

AVERAGE DISCHARGE (Creek only).--53 years, 6.13 cfs (4,440 acre-ft per year); median of yearly mean discharges, 3.2 cfs (2,300 acre-ft per year).
(Combined creek and diversions).--21 years, 7.67 cfs (5,560 acre-ft per year); median of yearly mean discharges, 4.0 cfs (2,900 acre-ft per year).

EXTREMES (Creek only).--Current year: Maximum discharge, 785 cfs Dec. 24 (gage height, 5.57 ft); no flow Apr. 14-17, July 31 to Aug. 2.
Period of record: Maximum discharge, 5,340 cfs Mar. 2, 1938, on basis of slope-area measurement of maximum flow; no flow for part of each year.
(Combined flow).--Current year: Maximum discharge, 785 cfs Dec. 24; minimum daily, 0.58 cfs June 11.
Period of record: Maximum discharge, 4,770 cfs Dec. 6, 1966; no flow Nov. 12, 1964, Sept. 29, 1965.

REMARKS.--Records fair. No regulation above station. Diversion from Alder Creek to Upper Plunge Creek area was active 1904-67. Diversions for irrigation are made at sites 0.5, 1.0, and 2.5 miles above station. Water has been diverted above station for irrigation during entire period of record. Combined discharge of Plunge Creek and upper, middle, and lower diversions is given on following page. (No flow in lower diversion since May 29, 1966). See schematic diagram of Santa Ana River basin.

DISCHARGE, IN CUBIC FEET PER SECOND, WATER YEAR OCTOBER 1971 TO SEPTEMBER 1972

DAY	OCT	NOV	DEC	JAN	FEB	MAR	APR	MAY	JUN	JUL	AUG	SEP
1	.03	.33	.66	10	4.0	.85	.03	.06	.06	.06	0	.08
2	.04	.30	.66	9.3	4.0	.85	.03	.06	.05	.06	0	.07
3	.04	.28	.66	7.5	3.8	.79	.02	.06	.05	.06	.01	.08
4	.04	.26	.66	7.0	3.6	.59	.02	.06	.06	.06	.01	.08
5	.04	.25	.66	6.7	3.3	.24	.02	.06	.07	.05	.01	.07
6	.04	.24	.66	6.4	3.3	.19	.02	.06	.07	.05	.08	.09
7	.04	.23	.66	6.2	2.8	.14	.02	.06	.06	.05	.10	.10
8	.04	.22	1.0	6.0	2.5	.10	.02	.10	.08	.05	.07	.09
9	.05	.22	.66	5.8	2.4	.08	.02	.07	.10	.04	.10	.08
10	.05	.21	.66	5.7	2.3	.08	.02	.08	.12	.05	.12	.12
11	.05	.21	.66	5.6	2.2	.07	.02	.09	.16	.03	.09	.10
12	.05	.54	.66	5.5	2.0	.09	.02	.09	.23	.02	.12	.08
13	.06	.48	1.0	5.4	1.9	.12	.04	.10	.40	.02	.10	.08
14	.20	.42	.66	5.3	1.9	.07	0	.12	1.0	.06	.08	.07
15	.55	.38	.66	5.2	1.7	.06	0	.20	.50	.04	.05	.07
16	.78	.36	.55	5.1	1.7	.08	0	.22	.35	.07	.06	.09
17	.60	.36	.55	5.1	1.6	.06	0	.24	.60	.09	.06	.09
18	.40	.36	.55	5.0	1.6	.05	.63	.27	.84	.09	.07	.09
19	.34	.45	.66	4.9	1.4	.05	.50	.36	.84	.10	.06	.09
20	.30	.45	.55	4.8	1.4	.06	.18	.16	.84	.10	.05	.09
21	.28	.45	.55	4.7	1.3	.06	.07	.16	.13	.09	.05	.09
22	.27	.55	22	4.7	1.3	.06	.06	.09	.12	.09	.05	.09
23	.26	.55	7.1	4.7	1.2	.06	.05	.05	.11	.08	.07	.09
24	1.1	.55	213	4.6	1.2	.06	.05	.05	.10	.06	.09	.09
25	.70	.55	60	4.6	1.2	.06	.05	.05	.09	.05	.09	.10
26	.45	.55	57	4.5	1.1	.06	.05	.03	.08	.05	.10	.10
27	.36	.55	45	4.4	1.0	.18	.05	.05	.07	.04	.10	.10
28	.78	.78	34	4.3	.92	.36	.06	.04	.07	.03	.10	.10
29	.55	.66	22	4.2	.92	.14	.06	.04	.06	.02	.08	.10
30	.44	.66	15	4.1	------	.05	.06	.05	.06	.02	.08	.10
31	.37	------	12	4.1	------	.03	------	.06	------	0	.08	------
TOTAL	9.30	12.40	501.09	171.4	59.54	5.74	2.17	3.19	7.37	1.68	2.13	2.67
MEAN	.30	.41	16.2	5.53	2.05	.19	.072	.10	.25	.054	.069	.089
MAX	1.1	.78	213	10	4.0	.85	.63	.36	1.0	.10	.12	.12
MIN	.03	.21	.55	4.1	.92	.03	0	.03	.05	0	0	.07
AC-FT	18	25	994	340	118	11	4.3	6.3	15	3.3	4.2	5.3

CAL YR 1971 TOTAL 1,037.07 MEAN 2.84 MAX 213 MIN .01 AC-FT 2,060
WTR YR 1972 TOTAL 778.68 MEAN 2.13 MAX 213 MIN 0 AC-FT 1,540

PEAK DISCHARGE (BASE, 130 CFS).--Dec. 24 (1700) 785 cfs (5.57 ft).

NOTE.--No gage-height record June 9 to July 7.

11055500 PLUNGE CREEK NEAR EAST HIGHLANDS, CALIF.--Continued

COMBINED DISCHARGE, IN CUBIC FEET PER SECOND, OF PLUNGE CREEK AND DIVERSIONS NEAR EAST HIGHLANDS, CALIF., WATER YEAR OCTOBER 1971 TO SEPTEMBER 1972

DAY	OCT	NOV	DEC	JAN	FEB	MAR	APR	MAY	JUN	JUL	AUG	SEP
1	1.3	1.7	2.0	10	4.0	2.0	2.0	1.7	1.5	1.0	.74	.81
2	1.3	1.6	2.0	9.3	4.0	2.0	2.0	1.7	1.4	.99	.75	.80
3	1.2	1.6	2.0	7.5	3.8	2.0	2.0	1.6	1.6	.97	.78	.85
4	1.2	1.6	2.0	7.0	3.6	2.2	1.9	1.6	1.5	.95	.78	.84
5	1.2	1.6	2.0	6.7	4.0	2.2	1.9	1.8	1.5	.94	.77	.81
6	1.1	1.5	2.0	6.4	4.4	2.8	2.0	1.8	1.6	.93	.88	.89
7	1.1	1.5	1.9	6.2	3.9	2.7	2.0	1.7	1.6	.93	.87	.90
8	1.1	1.5	2.1	6.0	3.6	2.6	2.0	1.5	1.2	.93	.84	.89
9	1.2	1.6	2.1	5.8	3.5	2.6	1.9	1.6	.85	.92	.86	.87
10	1.2	1.5	2.1	5.7	3.4	2.6	2.0	1.7	.64	.93	.90	.92
11	1.2	1.5	2.1	5.6	3.4	2.6	2.0	1.5	.58	.90	.87	.89
12	1.2	1.8	2.1	5.5	3.2	2.5	2.0	1.5	.65	.87	.97	.86
13	1.2	1.8	2.3	5.4	3.1	2.4	2.3	1.4	.82	.85	.84	.85
14	1.3	1.8	1.9	5.3	3.1	2.4	2.0	1.3	1.4	.89	.91	.84
15	1.8	1.8	2.0	5.2	2.9	2.3	2.0	1.3	.92	.90	.85	.82
16	1.8	1.7	2.0	5.1	2.9	2.2	1.9	1.4	.89	.92	.84	.84
17	1.9	1.7	2.0	5.1	2.8	2.1	1.9	1.4	.84	.94	.79	.84
18	1.7	1.7	2.0	5.0	2.8	2.0	2.1	1.6	.84	.95	.84	.85
19	1.6	1.8	2.1	4.9	2.6	1.8	1.4	2.2	.84	.99	.84	.86
20	1.5	1.8	2.0	4.8	2.6	2.2	1.9	2.0	.84	1.0	.80	.84
21	1.5	1.8	1.8	4.7	2.5	2.1	2.1	1.7	.83	.98	.75	.82
22	1.5	1.8	23	4.7	2.5	1.9	2.0	1.5	1.3	.94	.73	.81
23	1.5	1.8	7.1	4.7	2.4	2.0	1.8	1.4	1.4	.90	.74	.80
24	2.1	1.8	213	4.6	2.4	2.3	1.8	1.4	1.4	.87	.81	.83
25	1.4	1.8	60	4.6	2.4	2.3	1.8	1.4	1.3	.85	.86	.84
26	1.6	1.8	57	4.5	2.3	2.4	1.8	1.4	1.2	.83	.87	.82
27	1.7	1.8	45	4.4	2.2	1.8	1.8	1.4	1.2	.81	.90	.82
28	2.1	1.8	34	4.3	2.1	1.9	1.9	1.2	1.1	.79	.85	.81
29	1.6	2.0	22	4.2	2.1	2.2	1.9	1.2	1.0	.78	.84	.80
30	1.7	2.0	15	4.1	------	2.0	1.8	1.2	1.0	.78	.83	.78
31	1.8	------	12	4.1	------	2.0	------	1.4	------	.74	.83	------
TOTAL	45.6	51.5	530.6	171.4	88.5	69.1	57.9	47.5	33.74	27.97	25.73	25.20
MEAN	1.47	1.72	17.1	5.53	3.05	2.23	1.93	1.53	1.12	.90	.83	.84
MAX	2.1	2.0	213	10	4.4	2.8	2.3	2.2	1.6	1.0	.97	.92
MIN	1.1	1.5	1.8	4.1	2.1	1.8	1.4	1.2	.58	.74	.73	.78
AC-FT	90	102	1,050	340	176	137	115	94	67	55	51	50

CAL YR 1971 TOTAL 1,558.80 MEAN 4.27 MAX 213 MIN .68 AC-FT 3,090
WTR YR 1972 TOTAL 1,174.74 MEAN 3.21 MAX 213 MIN .58 AC-FT 2,330

PEAK DISCHARGE (BASE, 130 CFS).--Dec. 25 (1700) 785 cfs.

11055800 CITY CREEK NEAR HIGHLAND, CALIF.

LOCATION.--Lat 34°08'38", long 117°11'16", in SE¼SW¼NW¼ sec.27, T.1 N., R.3 W., San Bernardino County, on right bank 0.6 mile upstream from Highland Avenue, and 1.5 miles northeast of Highland.

DRAINAGE AREA.--19.6 sq mi.

PERIOD OF RECORD.--October 1919 to current year; combined records of creek and canal, June 1924 to current year.

GAGE.--Water-stage recorder on creek; water-stage recorder on canal. Altitude of gage is 1,580 ft (from topographic map). Prior to Mar. 1, 1939, at site 0.2 mile downstream at different datum.

AVERAGE DISCHARGE (Creek only).--53 years, 8.84 cfs (6,400 acre-ft per year); median of yearly mean discharges, 5.0 cfs (3,600 acre-ft per year). 52 years, 8.95 cfs (6,480 acre-ft per year); median of yearly mean discharges, 5.1 cfs (3,700 acre-ft per year); figures published in Water Resources Data for California, 1971, are in error.

(Combined).--48 years, 10.6 cfs (7,680 acre-ft per year); median of yearly mean discharges, 6.2 cfs (4,500 acre-ft per year).

EXTREMES (Creek only).--Current year: Maximum discharge, 722 cfs Dec. 24 (gage height, 5.72 ft); no flow for several days.

Period of record: Maximum discharge, 7,000 cfs Feb. 25, 1969 (gage height, 9.39 ft), from rating curve extended above 580 cfs on basis of slope-area measurement at gage height 8.83 ft; no flow for several months in some years.

(Combined).--Current year: Maximum discharge, 878 cfs Dec. 24; minimum daily, 0.15 cfs July 25, 28.

Period of record: Maximum discharge, 7,000 cfs Feb. 25, 1969; no flow at times in some years.

REMARKS.--Records fair. No regulation above station. City Creek Water Co.'s canal has diverted from point 0.5 mile above station for irrigation throughout period of record. See schematic diagram of Santa Ana River basin. Combined discharge of City Creek and canal is given on following page.

DISCHARGE, IN CUBIC FEET PER SECOND, WATER YEAR OCTOBER 1971 TO SEPTEMBER 1972

DAY	OCT	NOV	DEC	JAN	FEB	MAR	APR	MAY	JUN	JUL	AUG	SEP
1	.01	1.4	2.5	12	2.7	1.8	1.8	.65	.07	.09	0	.03
2	.01	.68	2.5	13	2.7	1.8	1.3	.65	.06	.02	0	.03
3	.01	.80	3.5	13	2.5	1.7	1.3	.65	.06	.11	0	.03
4	0	1.0	2.7	11	2.5	1.7	1.2	.69	.11	.10	0	.03
5	0	1.0	2.0	8.7	2.6	1.7	1.3	.69	.22	.30	0	.02
6	.01	1.0	3.1	7.9	2.9	1.7	1.4	.76	.29	.34	0	.02
7	.01	.58	3.1	6.5	2.5	1.6	1.4	.76	.40	.12	0	.02
8	.01	.65	2.9	5.8	2.4	1.6	1.5	.69	.48	.06	0	.02
9	.01	.67	2.8	5.9	2.3	1.4	1.4	.65	.49	.04	0	.02
10	0	.69	2.8	5.7	2.1	1.4	1.3	.65	.50	.02	0	.02
11	0	.70	2.8	5.9	2.4	1.3	1.3	.57	.40	.02	.01	.02
12	.01	.97	2.8	6.0	2.6	1.3	1.3	.57	.31	.01	.02	.02
13	.03	.59	3.3	5.8	2.8	1.3	1.5	.47	.28	0	.02	.01
14	.04	.83	3.0	5.5	2.7	1.3	1.3	.42	.27	0	.02	.01
15	.03	1.3	.50	5.2	2.8	1.2	1.2	.42	.25	0	.02	.01
16	.03	1.0	.10	5.2	2.6	1.1	1.1	.42	.10	0	.01	.01
17	.02	.57	.10	5.0	2.6	1.1	1.1	.47	.02	0	.02	.01
18	.02	.34	.10	4.8	2.4	1.4	1.8	.52	.02	0	.02	.01
19	.02	.20	.20	4.8	2.7	1.8	2.6	2.2	.02	0	.02	.01
20	.02	.14	.20	4.5	3.1	1.5	1.8	2.8	.02	0	.02	.01
21	.02	.12	.90	4.5	3.3	.20	1.0	2.2	.02	0	.02	.01
22	.02	.80	20	4.3	3.0	.20	.91	1.7	.02	0	.02	.01
23	8.0	2.8	9.5	4.3	1.9	.20	.82	.08	.02	0	.02	.01
24	4.3	2.7	247	4.3	1.9	.20	.71	.06	.02	0	.02	.02
25	3.1	2.7	199	4.1	1.8	.20	.83	.06	.02	0	.02	.02
26	2.4	2.7	95	4.3	1.8	.20	.67	.06	.02	0	.02	.02
27	2.2	2.6	42	3.3	1.7	.20	.68	.06	.02	0	.03	.02
28	2.1	2.6	29	2.5	1.8	.20	.66	.06	.02	0	.03	.02
29	2.1	2.6	21	2.4	1.8	.20	.68	.06	.02	0	.04	.02
30	2.1	2.5	17	2.8	------	.40	.70	.06	.21	0	.04	.01
31	2.2	------	15	2.9	------	1.2	------	.09	------	0	.04	------
TOTAL	28.83	37.23	736.40	181.9	70.9	33.10	36.56	20.19	4.76	1.23	.48	.52
MEAN	.93	1.24	23.8	5.87	2.44	1.07	1.22	.65	.16	.040	.016	.017
MAX	8.0	2.8	247	13	3.3	1.8	2.6	2.8	.50	.34	.04	.03
MIN	0	.12	.10	2.4	1.7	.20	.66	.06	.02	0	0	.01
AC-FT	57	74	1,460	361	141	66	73	40	9.4	2.4	1.0	1.0

CAL YR 1971 TOTAL 1,745.96 MEAN 4.78 MAX 247 MIN 0 AC-FT 3,460
WTR YR 1972 TOTAL 1,152.10 MEAN 3.15 MAX 247 MIN 0 AC-FT 2,290

PEAK DISCHARGE (BASE, 150 CFS).--Dec. 24 (1700) 722 cfs (5.72 ft).

11055800 CITY CREEK NEAR HIGHLAND, CALIF.--Continued

COMBINED DISCHARGE, IN CUBIC FEET PER SECOND, OF CITY CREEK AND CITY CREEK WATER CO.'S CANAL NEAR HIGHLAND, CALIF., WATER YEAR OCTOBER 1971 TO SEPTEMBER 1972

DAY	OCT	NOV	DEC	JAN	FEB	MAR	APR	MAY	JUN	JUL	AUG	SEP
1	1.7	2.4	2.5	12	4.5	4.3	2.2	1.8	.98	.56	.19	.51
2	1.4	2.4	2.5	13	4.5	4.2	2.7	1.8	.90	.54	.19	.42
3	1.2	2.5	3.5	13	4.2	4.1	3.1	1.8	1.0	.50	.26	.50
4	1.1	2.6	2.7	11	4.2	3.9	2.5	2.0	.63	.48	.34	.61
5	1.1	2.7	2.0	9.0	4.4	3.7	2.3	1.9	.51	.70	.33	.44
6	.99	2.8	3.1	8.4	5.0	3.7	2.4	2.0	.62	.69	.30	.72
7	.97	3.0	3.1	6.5	4.3	3.7	2.5	2.1	.73	.50	.48	.93
8	.97	3.2	2.9	5.8	4.1	3.5	2.6	2.0	.85	.50	.35	.86
9	.96	2.9	2.8	5.9	4.0	3.2	2.5	1.8	.86	.48	.35	.83
10	.94	3.0	2.8	5.7	3.7	3.2	2.5	2.0	.87	.48	.46	.96
11	.93	2.8	2.8	5.9	4.0	3.1	2.7	1.7	.73	.53	.53	1.0
12	.94	3.9	2.8	6.0	4.2	3.0	2.7	1.5	.60	.46	.65	.94
13	.99	3.8	3.3	5.8	4.3	3.1	3.2	1.3	.57	.40	.90	.61
14	1.1	3.2	3.0	5.5	4.1	3.1	3.0	1.1	.60	.47	.79	.48
15	1.3	3.2	3.0	5.2	4.2	2.8	2.7	1.1	.58	.49	.74	.44
16	3.8	3.4	3.0	5.2	3.9	2.6	2.5	1.3	.77	.52	.64	.46
17	3.1	3.4	3.4	5.0	3.9	2.5	2.5	1.5	.80	.66	.63	.46
18	2.7	3.5	3.1	4.8	3.6	2.5	2.9	1.7	.98	.91	.65	.44
19	2.2	3.6	3.0	4.8	3.6	2.2	2.6	3.0	.92	1.1	.59	.74
20	1.9	3.7	3.5	4.5	3.7	2.7	2.6	2.8	.92	1.1	.55	.75
21	1.8	3.0	3.3	4.5	4.0	2.7	2.7	2.2	1.5	.67	.41	.42
22	1.7	3.0	20	4.3	4.4	2.7	2.4	2.2	1.6	.53	.31	.35
23	9.7	2.8	9.7	4.3	4.8	2.7	2.2	1.9	2.1	.37	.27	.35
24	5.4	2.7	247	4.3	4.8	2.8	2.1	1.9	1.8	.26	.44	.53
25	3.1	2.7	199	4.1	4.6	2.7	2.1	2.1	1.5	.18	.64	.91
26	2.4	2.7	95	4.3	4.6	2.9	2.0	2.0	1.2	.15	.61	.83
27	2.2	2.6	42	4.4	4.0	3.1	1.9	1.6	.98	.20	.78	.75
28	2.1	2.6	29	4.4	3.9	3.1	1.9	1.4	.78	.15	.74	.69
29	2.1	2.6	21	4.4	4.0	3.1	2.0	1.2	.63	.16	.51	.53
30	2.1	2.5	17	4.6	------	2.9	2.0	1.0	.55	.19	.51	.36
31	2.2	------	15	4.7	------	2.5	------	1.1	------	.19	.56	------
TOTAL	65.09	89.2	756.8	191.3	121.5	96.3	74.0	54.8	28.06	15.12	15.70	18.82
MEAN	2.10	2.97	24.4	6.17	4.19	3.11	2.47	1.77	.94	.49	.51	.63
MAX	9.7	3.9	247	13	5.0	4.3	3.2	3.0	2.1	1.1	.90	1.0
MIN	.93	2.4	2.0	4.1	3.6	2.2	1.9	1.0	.51	.15	.19	.35
AC-FT	129	177	1,500	379	241	191	147	109	56	30	31	37

CAL YR 1971 TOTAL 2,187.71 MEAN 5.99 MAX 247 MIN .39 AC-FT 4,340
WTR YR 1972 TOTAL 1,526.69 MEAN 4.17 MAX 247 MIN .15 AC-FT 3,030

PEAK DISCHARGE (BASE, 150 CFS).--Dec. 24 (1700) 878 cfs.

11056500 LITTLE SAN GORGONIO CREEK NEAR BEAUMONT, CALIF.

LOCATION.--Lat 34°01'45", long 116°56'43", in NW¼SW¼NW¼ sec.1, T.2 S., R.1 W., San Bernardino County, on right bank at upstream side of bridge on Oak Glen Road, 3.0 miles upstream from Wallace Creek, and 7 miles north of Beaumont.

DRAINAGE AREA.--3.23 sq mi.

PERIOD OF RECORD.--October 1948 to current year.

GAGE.--Water-stage recorder and concrete control. Altitude of gage is 4,320 ft (from topographic map). Prior to July 30, 1970, at site 42 ft downstream on left bank at same datum.

AVERAGE DISCHARGE.--24 years, 0.48 cfs (348 acre-ft per year).

EXTREMES.--Current year: Maximum discharge, 2.7 cfs Dec. 24 (gage height, 3.47 ft); no flow for many days. Period of record: Maximum discharge, 11,000 cfs Feb. 25, 1969 (gage height, 8.50 ft, from floodmarks), from rating curve extended above 32 cfs on basis of slope-area measurements at gage heights 2.18, 3.45, and 8.50 ft; no flow for several months in most years.

REMARKS.--Records fair. No regulation above station. Several small diversions above station for irrigation. See schematic diagram of Santa Ana River basin.

DISCHARGE, IN CUBIC FEET PER SECOND, WATER YEAR OCTOBER 1971 TO SEPTEMBER 1972

DAY	OCT	NOV	DEC	JAN	FEB	MAR	APR	MAY	JUN	JUL	AUG	SEP
1			0	.27	.27	.37	.15	.07	0	.04	0	.02
2			0	.27	.27	.32	.14	.06	0	.03	0	.02
3			.01	.27	.26	.28	.15	.04	0	.02	0	.03
4			.01	.27	.26	.26	.16	.03	.02	.01	0	.03
5			.01	.20	.27	.20	.15	.02	.32	.01	0	.02
6			.01	.22	.27	.17	.14	.01	.21	.01	0	.04
7			.02	.36	.24	.17	.14	.01	.07	0	0	.03
8			0	.36	.20	.14	.14	.01	.06	.01	0	.03
9			.02	.36	.20	.14	.13	.01	.03	.01	0	.02
10			.02	.36	.20	.17	.15	.01	0	0	0	.03
11			.02	.36	.27	.15	.15	0	0	0	0	.03
12			.02	.39	.27	.15	.13	0	0	0	.20	.03
13			.03	.32	.27	.15	.17	0	0	0	.02	.02
14			.02	.27	.27	.15	.18	0	0	0	.02	.02
15			.02	.35	.27	.16	.14	0	0	0	.02	.02
16			.02	.36	.27	.16	.14	0	0	0	.02	.03
17			.02	.32	.35	.14	.13	0	0	0	.02	.02
18			.02	.27	.32	.13	.12	0	0	0	.02	.02
19			.01	.27	.27	.13	.21	0	0	0	.02	.02
20			.02	.27	.28	.14	.18	0	0	0	.02	.02
21			.02	.27	.36	.18	.13	0	0	0	.02	.02
22			.07	.27	.36	.17	.10	0	0	0	.01	.02
23			.02	.30	.36	.17	.10	0	0	0	.01	.02
24			.65	.32	.36	.18	.09	0	0	0	.02	.02
25			.73	.27	.36	.18	.09	0	0	0	.02	.03
26			.59	.33	.36	.20	.08	0	.03	0	.02	.02
27			.36	.27	.32	.20	.06	0	.05	0	.03	.02
28			.36	.27	.32	.23	.08	0	.04	0	.03	.02
29			.36	.27	.28	.23	.08	0	.04	0	.02	.02
30			.36	.27	------	.20	.07	0	.04	0	.02	.02
31		------	.36	.27	------	.18	------	0	------	0	.02	------
TOTAL	0	0	4.18	9.23	8.36	5.80	3.88	.27	.91	.14	.58	.71
MEAN	0	0	.13	.30	.29	.19	.13	.009	.030	.005	.019	.024
MAX	0	0	.73	.39	.36	.37	.21	.07	.32	.04	.20	.04
MIN	0	0	0	.20	.20	.13	.06	0	0	0	0	.02
AC-FT	0	0	8.3	18	17	12	7.7	.5	1.8	.3	1.2	1.4

CAL YR 1971 TOTAL 69.78 MEAN .19 MAX 1.1 MIN 0 AC-FT 138
WTR YR 1972 TOTAL 34.06 MEAN .093 MAX .73 MIN 0 AC-FT 68

PEAK DISCHARGE (BASE, 10 CFS).--No peak above base.

11057500 SAN TIMOTEO CREEK NEAR LOMA LINDA, CALIF.

LOCATION.--Lat 34°03'49", long 117°16'19", in San Bernardino Grant, San Bernardino County, on right bank 50 ft downstream from west bound lane of Interstate Highway 10, and 0.8 mile northwest of Loma Linda.

DRAINAGE AREA.--125 sq mi.

PERIOD OF RECORD.--October 1954 to September 1965, February 1968 to current year.

GAGE.--Water-stage recorder. Datum of gage is 1,015.89 ft above mean sea level. Prior to February 1968, at site 0.5 mile downstream at different datum.

AVERAGE DISCHARGE.--15 years (1954-65, 1968-72), 2.73 cfs (1,980 acre-ft per year); median of yearly mean discharges, 1.2 cfs (870 acre-ft per year).

EXTREMES.--Current year: Maximum discharge, not determined; no flow for several days.
Period of record: Maximum discharge, 15,000 cfs Feb. 25, 1969 (gage height, 8.2 ft, from floodmark), from rating curve extended above 2,100 cfs on basis of slope-conveyance measurement of maximum flow; no flow for several days in some years.

REMARKS.--Records poor. No regulation above station. Natural flow affected by pumping and return flow from irrigated areas.

DISCHARGE, IN CUBIC FEET PER SECOND, WATER YEAR OCTOBER 1971 TO SEPTEMBER 1972

DAY	OCT	NOV	DEC	JAN	FEB	MAR	APR	MAY	JUN	JUL	AUG	SEP
1	1.1	.78	.52	.02	.05	.64	.75	1.8	.52	1.5	.64	1.5
2	.78	.94	.33	.01	0	.52	1.1	.78	.64	.94	.64	1.5
3	.52	.94	.52	.04	.04	.52	1.1	.94	.52	1.1	.42	1.5
4	1.3	1.1	.42	.14	0	.78	1.3	1.1	.64	1.1	.25	1.5
5	.30	1.1	.42	.19	.02	.94	1.3	1.1	.78	1.3	.25	1.3
6	.25	1.3	.33	.33	0	1.3	1.8	.78	.78	1.3	.33	1.5
7	.78	2.0	.33	.33	0	1.3	1.5	.94	.78	.78	.42	1.3
8	.35	2.0	.25	.19	.05	1.3	1.3	.94	.94	.53	.33	1.5
9	.28	1.8	.25	.19	.08	1.3	1.1	.94	.78	.32	.33	1.5
10	0	1.5	.19	.19	.52	1.3	1.3	1.1	.52	.78	.42	1.8
11	.06	1.7	.19	.33	.78	1.1	1.3	1.3	.42	.51	.33	1.8
12	1.5	1.7	.14	.28	.64	1.1	1.1	1.1	.42	.78	.42	1.5
13	1.5	1.5	.14	.21	.64	1.1	.94	1.1	.39	.94	.33	1.8
14	1.1	1.1	.14	0	.64	1.1	1.1	1.1	.52	1.1	.33	2.0
15	.33	.94	.14	0	.52	1.1	1.1	.94	.64	1.1	.42	1.8
16	.33	1.1	.14	0	.64	1.3	1.1	.94	.64	1.1	.52	1.8
17	.19	1.1	.14	0	.94	1.1	.94	.94	.52	1.1	.64	1.8
18	.19	.94	.25	0	.78	.78	.78	.94	.33	.94	.78	2.0
19	.14	.94	.33	0	.78	.78	.64	.94	.29	.64	.94	1.1
20	.33	.78	.42	0	.78	.64	.78	.78	.26	.64	.64	.78
21	.42	.94	.52	0	.64	.46	.78	.94	.64	.94	.52	.45
22	.25	.94	11	0	.64	.24	.64	.78	.29	.78	.42	.78
23	.25	.94	2.6	0	.64	.94	.64	.52	.52	.78	.64	.64
24	.52	.94	20	0	.64	1.1	.78	.64	.78	.64	.78	.29
25	.52	.94	10	0	.64	.94	.64	.42	1.1	.64	.94	0
26	.64	.78	7.0	0	.64	1.1	.78	.52	1.6	.78	.94	.39
27	.94	.78	15	0	.64	.94	.64	.94	1.5	.52	1.1	1.8
28	1.3	.64	.78	0	.52	.78	.78	.78	1.5	.52	.78	.35
29	1.5	.64	.25	0	.78	.78	.78	.94	1.8	.64	.78	0
30	.94	.52	.04	0	------	.78	1.5	.64	1.5	.64	1.1	.75
31	.94	------	0	0	------	.64	------	.52	------	.64	1.3	------
TOTAL	19.55	33.32	72.78	2.45	13.68	28.70	30.29	28.14	22.56	26.02	18.68	36.73
MEAN	.63	1.11	2.35	.079	.47	.93	1.01	.91	.75	.84	.60	1.22
MAX	1.5	2.0	20	.33	.94	1.3	1.8	1.8	1.8	1.5	1.3	2.0
MIN	0	.52	0	0	0	.24	.64	.42	.26	.32	.25	0
AC-FT	39	66	144	4.9	27	57	60	56	45	52	37	73

CAL YR 1971 TOTAL 463.38 MEAN 1.27 MAX 20 MIN 0 AC-FT 919
WTR YR 1972 TOTAL 332.90 MEAN .91 MAX 20 MIN 0 AC-FT 660

PEAK DISCHARGE (BASE, 150 CFS).--No peak above base.

11058500 EAST TWIN CREEK NEAR ARROWHEAD SPRINGS, CALIF.

LOCATION.--Lat 34°10'45", long 117°15'53", in NW¼NE¼NE¼ sec.14, T.1N., R.4 W., San Bernardino County, on right bank 100 ft upstream from Del Rosa Water Co.'s diversion dam, 0.5 mile south of Arrowhead Springs, and 1.0 mile downstream from Strawberry Creek.

DRAINAGE AREA.--8.80 sq mi.

PERIOD OF RECORD.--December 1919 to current year. Prior to October 1952, published as Strawberry Creek near Arrowhead Springs.

GAGE.--Water-stage recorder. Broad-crested weir since September 1938. Altitude of gage is 1,590 ft (from topographic map).

AVERAGE DISCHARGE.--52 years (1920-72), 4.51 cfs (3,270 acre-ft per year); median of yearly mean discharges, 2.8 cfs (2,000 acre-ft per year).

EXTREMES.--Current year: Maximum discharge, 323 cfs Dec. 24 (gage height, 3.78 ft); minimum daily, 0.39 cfs Oct. 11.
Period of record: Maximum discharge, 3,360 cfs Mar. 2, 1938, based on rainfall-runoff studies; practically no flow at times in 1929, 1931-35.

REMARKS.--Records good. No regulation above station. One small diversion for domestic use above station. See schematic diagram of Santa Ana River basin.

DISCHARGE, IN CUBIC FEET PER SECOND, WATER YEAR OCTOBER 1971 TO SEPTEMBER 1972

DAY	OCT	NOV	DEC	JAN	FEB	MAR	APR	MAY	JUN	JUL	AUG	SEP
1	.58	1.0	.71	5.2	2.3	1.6	1.1	.94	.60	.54	.52	.54
2	.53	1.0	.71	4.5	2.2	1.5	1.2	.94	.64	.53	.52	.55
3	.49	1.0	.97	3.9	2.3	1.6	1.1	.92	1.1	.51	.54	.53
4	.47	.96	.97	3.1	2.3	1.5	1.1	.90	.70	.48	.55	.51
5	.46	.94	1.2	2.7	2.4	1.5	1.0	.82	.69	.47	.54	.50
6	.45	.92	1.0	2.5	2.5	1.3	1.0	.98	.73	.50	.55	.58
7	.48	.92	1.2	2.3	2.3	1.4	.99	.89	.79	.54	.54	.56
8	.45	.92	1.3	2.3	2.3	1.4	.97	.83	.88	.53	.54	.56
9	.44	.90	1.3	2.6	1.9	1.2	1.0	.92	1.0	.54	.54	.51
10	.40	.90	1.4	2.6	1.8	1.2	.99	1.0	.88	.53	.55	.53
11	.39	.90	1.4	2.5	1.7	1.1	1.1	1.3	.87	.54	.55	.51
12	.41	.90	1.6	2.5	1.9	1.4	1.2	1.1	.75	.53	.59	.51
13	.42	.77	1.9	2.5	1.9	1.6	1.3	.96	.76	.53	.56	.52
14	.46	.71	1.7	2.5	1.9	1.4	1.2	.83	.75	.55	.55	.55
15	.51	.77	1.7	2.5	1.8	1.3	1.2	.95	.75	.55	.55	.49
16	.66	.71	1.8	2.5	1.8	1.1	1.1	.93	.73	.54	.50	.50
17	.95	.65	1.8	2.4	1.7	1.2	1.1	.94	.77	.54	.50	.51
18	.90	.65	2.0	2.4	1.8	1.3	1.0	1.2	.78	.55	.52	.52
19	.83	.71	2.6	2.4	1.7	1.3	1.0	1.3	.75	.57	.52	.54
20	.76	.77	2.5	2.4	1.7	1.3	1.0	1.4	.79	.60	.50	.53
21	.73	.90	2.8	2.4	1.9	1.3	1.0	1.4	.83	.61	.50	.45
22	.72	1.0	14	2.4	1.8	1.2	.98	1.3	.94	.54	.50	.46
23	.73	.77	7.0	2.4	1.8	1.1	.98	1.3	.96	.57	.49	.46
24	2.8	.77	128	2.4	1.7	1.0	.97	1.2	.80	.57	.52	.48
25	2.5	.77	70	2.3	1.8	.98	.96	1.2	.71	.56	.53	.48
26	1.3	.90	33	2.3	1.6	1.2	.95	1.2	.71	.54	.53	.48
27	1.6	.83	21	2.3	1.7	1.2	.95	1.2	.57	.54	.58	.45
28	2.0	.83	14	2.3	1.6	.99	.94	1.1	.51	.53	.53	.45
29	1.5	.90	7.4	2.3	1.7	.98	.94	.87	.55	.52	.55	.44
30	1.2	.77	5.5	2.3	------	1.2	.94	.67	.52	.54	.52	.46
31	1.0	------	5.3	2.3	------	1.1	------	.62	------	.51	.53	------
TOTAL	27.12	25.44	337.76	82.0	55.8	39.45	31.26	32.11	22.81	16.70	16.51	15.16
MEAN	.87	.85	10.9	2.65	1.92	1.27	1.04	1.04	.76	.54	.53	.51
MAX	2.8	1.0	128	5.2	2.5	1.6	1.3	1.4	1.1	.61	.59	.58
MIN	.39	.65	.71	2.3	1.6	.98	.94	.62	.51	.47	.49	.44
AC-FT	54	50	670	163	111	78	62	64	45	33	33	30

CAL YR 1971 TOTAL 978.80 MEAN 2.68 MAX 128 MIN .39 AC-FT 1,940
WTR YR 1972 TOTAL 702.12 MEAN 1.92 MAX 128 MIN .39 AC-FT 1,390

PEAK DISCHARGE (BASE, 40 CFS).--Dec. 24 (1645) 323 cfs (3.78 ft).

11058600 WATERMAN CANYON CREEK NEAR ARROWHEAD SPRINGS, CALIF.

LOCATION.--Lat 34°11'36", long 117°16'25", in NE¼NW¼NW¼ sec.11, T.1 N., R.4 W., San Bernardino County, on left bank 0.8 mile northwest of Arrowhead Springs, and 1.3 miles north of San Bernardino National Forest boundary.

DRAINAGE AREA.--4.65 sq mi.

PERIOD OF RECORD.--November 1911 to October 1914 (published as "near San Bernardino"), December 1919 to current year.

GAGE.--Water-stage recorder. Broad-crested weir since September 1938. Datum of gage is 2,045.46 ft above mean sea level. Prior to December 1919, nonrecording gage at site 300 ft downstream at different datum.

AVERAGE DISCHARGE.--54 years (1912-14, 1920-72), 2.59 cfs (1,880 acre-ft per year); median of yearly mean discharges, 1.6 cfs (1,200 acre-ft per year).

EXTREMES.--Current year: Maximum discharge, 172 cfs Dec. 25 (gage height, 3.37 ft), from rating curve extended above 140 cfs on basis of slope-area measurement at gage height 4.82 ft; minimum daily, 0.01 cfs Aug. 2.
1920 to current year: Maximum discharge, 2,350 cfs Mar. 2, 1938, based on rainfall-runoff studies; no flow at times in most years.

REMARKS.--Records good. No regulation above station. One small diversion for domestic use above station. See schematic diagram of Santa Ana River basin.

DISCHARGE, IN CUBIC FEET PER SECOND, WATER YEAR OCTOBER 1971 TO SEPTEMBER 1972

DAY	OCT	NOV	DEC	JAN	FEB	MAR	APR	MAY	JUN	JUL	AUG	SEP
1	.25	.68	.70	3.6	1.7	1.2	.78	.37	.24	.23	.02	.02
2	.20	.66	.70	3.3	1.8	1.2	.78	.37	.24	.20	.01	.02
3	.19	.64	.70	3.0	1.7	1.1	.78	.37	.24	.19	.02	.04
4	.18	.64	.70	2.6	1.7	1.1	.77	.37	.22	.17	.02	.06
5	.16	.64	.68	2.4	1.9	1.0	.73	.36	.23	.16	.03	.03
6	.15	.65	.68	2.2	2.0	.99	.76	.35	.23	.14	.03	.09
7	.13	.65	.68	2.1	1.7	1.0	.77	.35	.25	.12	.03	.09
8	.13	.66	.68	2.0	1.6	1.0	.79	.34	.31	.11	.03	.08
9	.11	.68	.68	1.8	1.6	.97	.74	.33	.34	.11	.03	.10
10	.08	.71	.68	1.6	1.6	.97	.77	.33	.29	.12	.03	.14
11	.10	.74	.68	1.4	1.5	.98	.81	.33	.26	.12	.03	.14
12	.10	.76	.68	1.4	1.4	.97	.81	.32	.23	.11	.12	.11
13	.11	.78	.87	1.4	1.4	1.0	.87	.32	.20	.08	.09	.09
14	.11	.80	.73	1.4	1.4	.97	.85	.31	.23	.09	.07	.09
15	.11	.81	.73	1.4	1.4	.95	.77	.31	.20	.11	.05	.09
16	.11	.82	.70	1.4	1.3	.86	.72	.30	.23	.11	.04	.08
17	.50	.81	.72	1.4	1.3	.87	.70	.30	.28	.10	.03	.08
18	.45	.80	.70	1.4	1.3	.93	.92	.30	.26	.10	.04	.10
19	.43	.80	.67	1.4	1.3	.87	.91	.29	.24	.13	.06	.13
20	.40	.79	.67	1.5	1.3	.89	.77	.29	.29	.17	.04	.13
21	.39	.78	.69	1.5	1.3	.88	.67	.28	.36	.17	.03	.14
22	.38	.76	6.6	1.5	1.3	.92	.63	.28	.49	.16	.02	.15
23	.38	.74	1.5	1.5	1.3	.93	.60	.28	.48	.09	.02	.16
24	1.7	.72	26	1.5	1.3	.88	.61	.27	.44	.07	.03	.17
25	1.2	.72	20	1.6	1.2	.89	.57	.27	.39	.06	.05	.18
26	.85	.72	12	1.6	1.2	.96	.50	.26	.34	.05	.05	.19
27	1.0	.72	11	1.6	1.2	.94	.47	.26	.28	.05	.06	.20
28	1.3	.72	7.7	1.6	1.2	.92	.43	.25	.26	.04	.04	.21
29	1.0	.70	6.2	1.7	1.2	.84	.46	.25	.23	.02	.02	.22
30	.82	.70	5.1	1.6	------	.81	.41	.25	.23	.02	.02	.23
31	.74	------	4.3	1.7	------	.79	------	.24	------	.02	.02	------
TOTAL	13.76	21.80	115.12	56.1	42.1	29.58	21.15	9.50	8.51	3.42	1.18	3.56
MEAN	.44	.73	3.71	1.81	1.45	.95	.71	.31	.28	.11	.038	.12
MAX	1.7	.82	26	3.6	2.0	1.2	.92	.37	.49	.23	.12	.23
MIN	.08	.64	.67	1.4	1.2	.79	.41	.24	.20	.02	.01	.02
AC-FT	27	43	228	111	84	59	42	19	17	6.8	2.3	7.1

CAL YR 1971 TOTAL 409.86 MEAN 1.12 MAX 26 MIN .08 AC-FT 813
WTR YR 1972 TOTAL 325.78 MEAN .89 MAX 26 MIN .01 AC-FT 646

PEAK DISCHARGE (BASE, 35 CFS).--Dec. 25 (1615) 172 cfs (3.37 ft).

NOTE.--No gage-height record Oct. 13 to Dec. 10, May 2 to June 1.

11059000 WARM CREEK FLOODWAY AT SAN BERNARDINO, CALIF.

LOCATION.--Lat 34°05'45", long 117°16'30", in San Bernardino Grant, San Bernardino County, on left bank 0.4 mile upstream from Mill Street, and 1.8 miles upstream from mouth.

DRAINAGE AREA.--47.8 sq mi.

PERIOD OF RECORD.--January 1961 to current year. Prior to October 1965, published as "near San Bernardino."

GAGE.--Water-stage recorder. Altitude of gage is 1,000 ft (from topographic map). Prior to Dec. 21, 1967, at site 0.4 mile downstream at different datum.

EXTREMES.--Current year: Maximum discharge, 1,710 cfs Oct. 24 (gage height, 4.54 ft); no flow most of year. Period of record: Maximum discharge, 9,600 cfs Feb. 25, 1969 (gage height, 6.75 ft), from rating curve extended above 3,000 cfs; no flow most of each year.

REMARKS.--Records fair except those less than 1 cfs, which are poor. Flow partly regulated by percolation basins above Marshall Boulevard. Del Rosa Water Co. diverts from East Twin Creek for domestic use and irrigation. See schematic diagram of Santa Ana River basin.

DISCHARGE, IN CUBIC FEET PER SECOND, WATER YEAR OCTOBER 1971 TO SEPTEMBER 1972

DAY	OCT	NOV	DEC	JAN	FEB	MAR	APR	MAY	JUN	JUL	AUG	SEP
1	0	0	0	2.0	0	0	0	1.2	0	.16		
2	0	0	0	1.7	0	0	0	.82	0	0		
3	0	0	.14	.81	0	0	0	.92	0	0		
4	0	0	0	0	0	0	0	.71	.10	.10		
5	0	0	0	0	0	0	.67	0	.01	.65		
6	0	0	.62	0	0	0	.04	0	.02	.35		
7	0	0	.22	0	0	0	0	0	.17	0		
8	0	0	0	0	0	0	.14	0	0	.02		
9	0	0	0	0	0	0	0	0	0	0		
10	0	0	0	0	0	0	0	0	0	0		
11	0	0	0	0	0	0	0	0	0	0		
12	0	13	0	0	0	0	0	0	.07	0		
13	0	.20	2.9	0	0	0	.17	0	0	0		
14	0	0	0	0	.04	0	0	0	0	0		
15	0	0	.05	0	0	0	0	0	0	0		
16	9.9	0	0	0	0	.04	0	0	0	0		
17	3.6	0	0	0	0	0	0	0	0	0		
18	0	0	0	0	0	0	.21	0	0	0		
19	0	0	0	0	0	0	0	1.3	0	0		
20	0	0	0	0	0	0	0	.07	1.4	0		
21	0	0	0	0	0	0	.46	0	.33	0		
22	0	0	97	0	.05	0	.65	0	0	0		
23	0	0	3.8	0	0	2.8	.58	0	0	0		
24	150	0	448	0	0	1.0	.64	0	.15	0		
25	9.3	0	197	0	0	1.0	.50	0	0	0		
26	.05	0	49	0	0	1.0	1.0	0	0	0		
27	0	0	115	0	0	.54	.35	0	0	0		
28	12	0	40	0	0	.03	.92	0	0	0		
29	.96	0	3.8	0	0	.13	.78	0	0	0		
30	0	0	3.0	0	------	.02	0	0	.34	0		
31	0	------	2.3	0	------	0	------	0	------	0		------
TOTAL	185.81	13.20	962.83	4.51	.09	6.56	7.11	5.02	2.59	1.28	0	0
MEAN	5.99	.44	31.1	.15	.003	.21	.24	.16	.086	.041	0	0
MAX	150	13	448	2.0	.05	2.8	1.0	1.3	1.4	.65	0	0
MIN	0	0	0	0	0	0	0	0	0	0	0	0
AC-FT	369	26	1,910	9.0	.2	13	14	10.0	5.1	2.5	0	0

CAL YR 1971 TOTAL 1,459.61 MEAN 4.00 MAX 448 MIN 0 AC-FT 2,900
WTR YR 1972 TOTAL 1,189.00 MEAN 3.25 MAX 448 MIN 0 AC-FT 2,360

11059300 SANTA ANA RIVER AT E STREET, NEAR SAN BERNARDINO, CALIF.

LOCATION.--Lat 34°04'05", long 117°17'36", in San Bernardino Grant, San Bernardino County, on downstream side of E Street bridge, 0.8 mile downstream from San Timoteo Creek, 1 mile upstream from Warm Creek, and 3 miles south of San Bernardino.

DRAINAGE AREA.--532 sq mi.

PERIOD OF RECORD.--March 1939 to September 1954, October 1966 to current year.

GAGE.--Water-stage recorder. Altitude of gage is 970 ft (from topographic map). Prior to Nov. 10, 1950, water-stage recorder on right bank at datum 10.00 ft higher. Nov. 11, 1950, to Sept. 30, 1954, water-stage recorders on both banks at datum 10.00 ft higher.

AVERAGE DISCHARGE.--15 years (1939-54), 12.5 cfs (9,050 acre-ft per year); median of yearly mean discharges, 6.9 cfs (5,000 acre-ft per year); 6 years (1967-72), 78.9 cfs (57,160 acre-ft per year).

EXTREMES.--Current year: Maximum discharge, about 3,900 cfs Dec. 24 (gage height, 6.41 ft); minimum daily, 10 cfs on many days.
Period of record: Maximum discharge, 28,000 cfs Feb. 25, 1969; maximum gage height, 16.50 ft (present datum) Jan. 23, 1943, discharge uncertain but was probably less than 8,000 cfs; no flow many days prior to 1967.

REMARKS.--Records poor. Flow partly regulated by Big Bear Lake (see sta 11049000). Natural flow of stream affected by ground-water withdrawals and diversions for domestic use and irrigation above station. Effluent from sewage reclamation plant causes sustained flow since station was last operated. Records of chemical analyses for the current year are published in Part 2 of this report. See schematic diagram of Santa Ana River basin.

DISCHARGE, IN CUBIC FEET PER SECOND, WATER YEAR OCTOBER 1971 TO SEPTEMBER 1972

DAY	OCT	NOV	DEC	JAN	FEB	MAR	APR	MAY	JUN	JUL	AUG	SEP
1	13	13	12	14	12	12	11	14	14	13	14	14
2	12	13	12	13	13	13	11	14	14	12	14	13
3	12	13	12	14	13	12	11	15	14	14	14	13
4	13	13	13	13	12	12	11	14	14	14	13	14
5	13	13	17	13	13	10	11	14	13	13	13	15
6	13	13	14	14	12	10	12	14	14	13	12	14
7	13	12	13	14	13	10	12	14	19	14	14	13
8	13	13	13	14	13	10	12	14	13	13	13	13
9	13	13	12	12	12	10	12	14	13	12	13	15
10	12	13	12	13	13	10	12	14	13	14	13	14
11	12	12	12	13	13	10	12	12	13	13	15	14
12	12	30	12	13	13	10	12	12	13	13	14	15
13	12	13	12	14	12	10	12	13	14	14	13	15
14	12	12	12	13	13	10	12	13	14	13	13	13
15	12	13	12	13	12	10	12	13	14	13	12	12
16	12	13	12	13	13	10	13	15	13	12	12	13
17	36	12	12	14	12	10	13	13	14	14	13	13
18	12	12	12	13	11	10	13	12	13	13	13	13
19	12	12	12	13	13	10	13	12	12	14	12	14
20	12	13	13	13	12	11	13	12	14	14	12	14
21	12	12	11	14	13	11	13	12	13	13	13	12
22	13	13	110	13	13	11	13	12	13	13	14	12
23	10	13	40	12	13	11	13	13	12	12	12	13
24	98	13	1,030	13	13	11	13	12	13	14	13	13
25	41	12	506	13	13	11	13	13	13	13	12	12
26	16	12	325	12	13	10	14	12	12	14	12	13
27	14	12	400	13	13	10	14	12	14	14	13	13
28	40	13	150	13	13	11	14	12	13	13	13	13
29	14	13	21	13	12	11	14	12	14	13	14	14
30	13	12	16	13	------	11	14	13	15	12	14	13
31	12	------	15	13	------	10	------	13	------	14	14	------
TOTAL	554	396	2,875	408	366	328	375	404	407	410	406	402
MEAN	17.9	13.2	92.7	13.2	12.6	10.6	12.5	13.0	13.6	13.2	13.1	13.4
MAX	98	30	1,030	14	13	13	14	15	19	14	15	15
MIN	10	12	11	12	11	10	11	12	12	12	12	12
AC-FT	1,100	785	5,700	809	726	651	744	801	807	813	805	797

CAL YR 1971 TOTAL 7,677 MEAN 21.0 MAX 1,030 MIN 10 AC-FT 15,230
WTR YR 1972 TOTAL 7,331 MEAN 20.0 MAX 1,030 MIN 10 AC-FT 14,540

PEAK DISCHARGE (BASE, 400 CFS)

DATE	TIME	G.H.	DISCHARGE	DATE	TIME	G.H.	DISCHARGE
10-24	1800	6.05	1,700	12-24	1900	6.41	a 3,900
12-22	1800	5.45	612				

NOTE.--No gage-height record or stage-discharge relation indefinite most of year.

a About.

11060400 WARM CREEK NEAR SAN BERNARDINO, CALIF.

LOCATION.--Lat 34°04'51", long 117°17'53", in San Bernardino Grant, San Bernardino County, on right bank 265 ft downstream from State Highway 395 bridge, 0.1 mile downstream from Lytle Creek (east channel), and 1.9 miles southeast of San Bernardino.

DRAINAGE AREA.--15.0 sq mi.

PERIOD OF RECORD.--February 1964 to current year.

GAGE.--Water-stage recorder. Altitude of gage is 975 ft (from topographic map).

AVERAGE DISCHARGE.--8 years, 1.61 cfs (1,170 acre-ft per year).

EXTREMES.--Current year: Maximum discharge, 1,190 cfs Dec. 24 (gage height, 4.59 ft); no flow most of year. Period of record: Maximum discharge, 2,200 cfs Jan. 25, 1969 (gage height, 5.55 ft); no flow most of each year.

REMARKS.--Records fair. At times discharge diverted above station to Warm Creek floodway. See schematic diagram of Santa Ana River basin.

DISCHARGE, IN CUBIC FEET PER SECOND, WATER YEAR OCTOBER 1971 TO SEPTEMBER 1972

DAY	OCT	NOV	DEC	JAN	FEB	MAR	APR	MAY	JUN	JUL	AUG	SEP
1	0	0	0									
2	0	0	0									
3	0	0	0									
4	0	0	0									
5	0	0	0									
6	0	0	0									
7	0	0	0									
8	0	0	0									
9	0	0	0									
10	0	0	0									
11	0	0	0									
12	0	.10	0									
13	0	0	0									
14	0	0	0									
15	0	0	0									
16	0	0	0									
17	.20	0	0									
18	0	0	0									
19	0	0	0									
20	0	0	0									
21	0	0	0									
22	0	0	22									
23	0	0	0									
24	6.7	0	236									
25	0	0	74									
26	0	0	.62									
27	0	0	91									
28	.09	0	9.4									
29	0	0	0									
30	0	0	0		------							
31	0	------	0		------		------		------			------
TOTAL	6.99	.10	433.02	0	0	0	0	0	0	0	0	0
MEAN	.23	.003	14.0	0	0	0	0	0	0	0	0	0
MAX	6.7	.10	236	0	0	0	0	0	0	0	0	0
MIN	0	0	0	0	0	0	0	0	0	0	0	0
AC-FT	14	.2	859	0	0	0	0	0	0	0	0	0

CAL YR 1971 TOTAL 475.76 MEAN 1.30 MAX 236 MIN 0 AC-FT 944
WTR YR 1972 TOTAL 440.11 MEAN 1.20 MAX 236 MIN 0 AC-FT 873

11060500 MEEKS AND DALEY CANAL NEAR COLTON, CALIF.

LOCATION.--Lat 34°04'47", long 117°18'00", in San Bernardino Grant, San Bernardino County, at point of diversion from Warm Creek, and 1.5 miles northeast of Colton.

PERIOD OF RECORD.--September 1920 to current year. Published with station Warm Creek near Colton, October 1950 to September 1961.

GAGE.--Water-stage recorder. Altitude of gage is 965 ft (from topographic map).

EXTREMES.--Period of record: Maximum daily discharge, 25 cfs Mar. 2, 1938; no flow at times most years.

REMARKS.--Records good. Canal diverts water from right bank of Warm Creek 1.6 miles northeast of Colton for irrigation in vicinity of Colton, Riverside, and Corona. All flow passing station this year was pumped from ground-water basin. Pumping began in 1931. See schematic diagram of Santa Ana River basin.

DISCHARGE, IN CUBIC FEET PER SECOND, WATER YEAR OCTOBER 1971 TO SEPTEMBER 1972

DAY	OCT	NOV	DEC	JAN	FEB	MAR	APR	MAY	JUN	JUL	AUG	SEP
1	5.0	1.9	5.2	0	1.5	.96	6.5	6.2	.83	5.6	8.7	13
2	5.0	1.9	5.2	0	1.1	1.1	6.5	5.2	.83	5.6	8.7	13
3	5.0	1.9	5.2	0	1.1	1.1	6.5	5.6	.83	5.6	8.7	12
4	4.7	1.9	5.2	0	1.1	1.1	6.5	5.6	.96	5.6	8.7	12
5	4.7	1.9	5.2	0	.64	.96	6.5	5.6	.96	5.6	8.7	12
6	2.8	1.9	5.2	0	0	.96	6.5	5.6	.83	5.2	8.7	12
7	1.9	1.9	5.2	0	0	.96	6.5	5.6	4.0	5.2	11	12
8	1.9	1.9	5.0	0	0	.96	6.5	5.6	5.6	5.6	13	12
9	1.9	3.9	5.0	0	0	.96	6.5	5.8	5.6	5.6	13	12
10	1.9	5.2	5.0	0	0	.96	6.5	6.2	5.6	5.8	13	12
11	1.9	5.2	5.0	0	0	.96	6.5	6.2	5.2	6.2	13	12
12	1.9	5.2	5.0	0	0	1.1	6.5	6.2	5.2	6.5	13	12
13	1.9	5.2	5.0	0	0	1.8	6.5	6.2	5.6	5.2	13	12
14	1.7	5.2	5.0	0	0	2.1	6.5	6.2	5.6	1.9	13	12
15	1.7	5.2	5.0	0	0	2.1	6.5	4.2	5.6	1.9	13	12
16	1.4	5.0	5.0	0	.64	2.1	6.5	1.6	5.6	1.9	13	12
17	1.8	5.0	5.0	0	.96	2.1	6.5	.96	5.6	1.9	13	8.8
18	.96	5.0	5.0	0	.96	2.1	6.8	.96	5.6	1.9	13	7.0
19	.83	5.0	5.0	0	1.1	2.1	6.5	.96	5.6	1.7	13	7.2
20	.83	5.0	5.0	0	1.1	4.0	6.5	.96	5.6	1.7	13	7.2
21	.83	5.0	5.0	0	1.1	6.5	6.5	.83	5.2	1.7	13	7.1
22	1.4	5.0	1.7	0	1.1	6.5	6.5	.83	5.2	1.7	13	10
23	1.7	3.4	0	0	1.1	6.5	6.5	.96	5.2	2.9	13	12
24	1.9	0	.13	0	1.1	6.5	6.5	.96	5.6	9.1	12	12
25	1.1	0	.02	0	1.1	6.5	6.5	.96	5.2	9.1	12	11
26	0	0	0	0	1.1	6.5	6.5	.83	5.2	9.1	12	12
27	0	0	0	0	1.1	6.2	6.5	.83	5.2	9.1	12	12
28	0	1.9	0	.55	.96	6.5	6.5	.83	5.2	9.1	12	12
29	.79	5.2	0	1.9	.96	6.5	6.5	.83	5.2	8.7	12	12
30	1.9	5.2	0	1.9	------	6.5	6.5	.83	5.2	8.7	12	12
31	1.9	------	0	1.9	------	6.5	------	.83	------	8.7	12	------
TOTAL	61.24	101.0	108.25	6.25	19.82	101.68	195.3	100.96	133.64	164.1	367.2	336.3
MEAN	1.98	3.37	3.49	.20	.68	3.28	6.51	3.26	4.45	5.29	11.8	11.2
MAX	5.0	5.2	5.2	1.9	1.5	6.5	6.8	6.2	5.6	9.1	13	13
MIN	0	0	0	0	0	.96	6.5	.83	.83	1.7	8.7	7.0
AC-FT	121	200	215	12	39	202	387	200	265	325	728	667

CAL YR 1971 TOTAL 1,416.29 MEAN 3.88 MAX 6.9 MIN 0 AC-FT 2,810
WTR YR 1972 TOTAL 1,695.74 MEAN 4.63 MAX 13 MIN 0 AC-FT 3,360

11062000 LYTLE CREEK NEAR FONTANA, CALIF.

LOCATION.--Lat 34°12'44", long 117°27'26", in SE¼NW¼SE¼ sec.36, T.2 N., R.6 W., San Bernardino County, on right bank 75 ft upstream from highway bridge, 0.7 mile upstream from right tributary, and 8 miles north of Fontana.
DRAINAGE AREA.--46.3 sq mi.
PERIOD OF RECORD.--October 1918 to current year. Combined records of Lytle Creek and diversions, October 1898 to December 1899, October 1904 to current year (published as "at mouth of canyon near Rialto" 1898-99, as "near San Bernardino" 1904-18, and as Lytle Creek and Fontana pipe line near Fontana 1919-31). Monthly discharge only for some periods published in WSP 1315-B.
GAGE.--Water-stage recorder on creek. Dual arch-culvert control since 1964; water-stage recorders and sharp-crested weirs on conduit and infiltration line. Altitude of gage is 2,380 ft (from topographic map). October 1918 to Mar. 21, 1938, at site 1 mile downstream at different datum. Mar. 22, 1938, to Nov. 20, 1963, at site 75 ft downstream at datum 4.58 ft.
AVERAGE DISCHARGE (Creek only).--54 years, 14.1 cfs (10,220 acre-ft per year); median of yearly mean discharges, 2.2 cfs (1,600 acre-ft per year).
(Combined creek and diversions).--69 years, 42.7 cfs (30,940 acre-ft per year); median of yearly mean discharges, 32 cfs (23,200 acre-ft per year).
EXTREMES (Creek only).--Current year: Maximum discharge, 1,360 cfs Dec. 24 (gage height, 6.95 ft); no flow most of year.
Period of record: Maximum discharge, 35,900 cfs Jan. 25, 1969 (gage height, 15.0 ft, from floodmark), from rating curve extended above 570 cfs on basis of slope-area measurements at gage heights 10.78 and 15.0 ft; no flow at times in each year.
(Combined flow).--Current year: Maximum discharge, 1,370 cfs Dec. 24; minimum daily, 11 cfs Oct. 15, July 24, Aug. 21.
Period of record: Maximum discharge, 35,900 cfs Jan. 25, 1969; minimum daily, 4.4 cfs Oct. 4-11, 1970 (affected by change in diversions due to fire of September 1970).
REMARKS.--Records (creek only), fair; (combined creek and diversions), fair. No regulation above station. Southern California Edison Co.'s Lytle Creek conduit diverts 2.3 miles upstream for power development, and Fontana Union Water Co. collects water from an infiltration line upstream for irrigation. See schematic diagram of Santa Ana River basin. For records of combined discharge of Lytle Creek and diversions, see following page.

DISCHARGE, IN CUBIC FEET PER SECOND, WATER YEAR OCTOBER 1971 TO SEPTEMBER 1972

DAY	OCT	NOV	DEC	JAN	FEB	MAR	APR	MAY	JUN	JUL	AUG	SEP
1			0	18	9.7							
2			0	18	9.7							
3			0	18	9.0							
4			0	18	7.6							
5			0	18	7.2							
6			0	18	6.6							
7			0	18	5.8							
8			0	17	4.8							
9			0	16	3.9							
10			0	16	3.2							
11			0	16	2.5							
12			0	16	2.0							
13			0	16	1.5							
14			0	16	1.0							
15			0	15	.50							
16			0	14	0							
17			0	14	0							
18			0	13	0							
19			0	13	0							
20			0	13	0							
21			0	13	0							
22			17	12	0							
23			14	11	0							
24			369	11	0							
25			218	9.7	0							
26			101	10	0							
27			70	10	0							
28			52	9.7	0							
29			47	9.7	0							
30			31	9.7	------							
31		------	19	9.7	------		------		------			------
TOTAL	0	0	938	436.5	75.00	0	0	0	0	0	0	0
MEAN	0	0	30.3	14.1	2.59	0	0	0	0	0	0	0
MAX	0	0	369	18	9.7	0	0	0	0	0	0	0
MIN	0	0	0	9.7	0	0	0	0	0	0	0	0
AC-FT	0	0	1,860	866	149	0	0	0	0	0	0	0

CAL YR 1971 TOTAL 1,617.87 MEAN 4.43 MAX 369 MIN 0 AC-FT 3,210
WTR YR 1972 TOTAL 1,449.50 MEAN 3.96 MAX 369 MIN 0 AC-FT 2,880

PEAK DISCHARGE (BASE, 200 CFS).--Dec. 24 (1315) 1,360 cfs (6.95 ft).

11062000 LYTLE CREEK NEAR FONTANA, CALIF.--Continued

COMBINED DISCHARGE, IN CUBIC FEET PER SECOND, OF LYTLE CREEK, SOUTHERN CALIFORNIA EDISON CO.'S LYTLE CREEK CONDUIT, AND FONTANA UNION WATER CO.'S INFILTRATION LINE, NEAR FONTANA, CALIF., WATER YEAR OCTOBER 1971 TO SEPTEMBER 1972

DAY	OCT	NOV	DEC	JAN	FEB	MAR	APR	MAY	JUN	JUL	AUG	SEP
1	15	17	17	37	30	24	19	17	16	14	13	13
2	15	17	17	38	30	24	18	17	16	14	13	13
3	15	17	17	42	31	24	18	18	16	14	13	14
4	14	17	17	40	30	22	18	18	15	14	13	14
5	14	17	17	39	31	21	18	18	16	14	13	14
6	14	17	17	40	29	20	19	18	16	14	13	14
7	14	17	17	42	29	23	19	18	16	14	13	14
8	14	17	17	42	28	22	20	18	16	14	13	14
9	14	17	17	39	27	22	20	18	16	14	13	14
10	14	17	18	39	26	22	20	17	16	14	13	14
11	14	17	18	38	25	22	20	17	16	14	13	14
12	14	18	17	38	24	21	20	17	16	13	14	14
13	14	18	18	38	24	21	20	17	15	13	14	14
14	16	17	17	40	22	20	20	16	15	14	14	14
15	11	17	17	40	22	20	19	16	15	14	14	14
16	13	17	17	38	24	20	19	16	15	14	14	14
17	15	17	17	38	26	20	19	17	15	14	13	14
18	16	17	17	38	25	20	20	17	15	14	14	14
19	16	17	17	38	26	20	20	17	15	14	14	14
20	16	17	17	37	26	20	19	17	16	14	13	14
21	16	17	17	37	25	20	19	17	15	14	11	14
22	16	17	27	36	25	20	19	17	15	14	13	14
23	16	17	18	35	25	20	19	17	15	14	14	13
24	16	17	373	35	25	18	18	17	15	11	13	12
25	15	17	223	35	25	18	18	17	15	14	14	13
26	17	17	106	34	24	20	17	17	15	14	13	12
27	17	17	75	31	24	19	18	16	15	13	13	12
28	18	17	57	30	24	19	18	16	14	13	13	12
29	17	17	52	30	25	19	18	16	14	13	13	14
30	17	17	42	30	------	18	18	16	14	13	13	14
31	17	------	38	30	------	19	------	16	------	13	13	------
TOTAL	470	512	1,371	1,144	757	638	567	526	459	424	410	408
MEAN	15.2	17.1	44.2	36.9	26.1	20.6	18.9	17.0	15.3	13.7	13.2	13.6
MAX	18	18	373	42	31	24	20	18	16	14	14	14
MIN	11	17	17	30	22	18	17	16	14	11	11	12
AC-FT	932	1,020	2,720	2,270	1,500	1,270	1,120	1,040	910	841	813	809

CAL YR 1971 TOTAL 8,561 MEAN 23.5 MAX 373 MIN 11 AC-FT 16,980
WTR YR 1972 TOTAL 7,686 MEAN 21.0 MAX 373 MIN 11 AC-FT 15,250

PEAK DISCHARGE (BASE, 200 CFS).--Dec. 24 (1315) 1,370 cfs.

11063500 LONE PINE CREEK NEAR KEENBROOK, CALIF.

LOCATION.--Lat 34°15'59", long 117°27'47", in SE¼SE¼SW¼ sec.12, T.2 N., R.6 W., San Bernardino County, on right bank 50 ft upstream from the Atchison, Topeka and Santa Fe Railway Co. bridge, 150 ft upstream from mouth, and 1.1 miles north of Keenbrook.

DRAINAGE AREA.--15.1 sq mi.

PERIOD OF RECORD.--December 1919 to September 1938, June 1949 to current year.

GAGE.--Water-stage recorder and concrete control. Datum of gage is 2,605.92 ft above mean sea level. Prior to Mar. 2, 1938, water-stage recorder (destroyed by flood) and Mar. 2 to Sept. 30, 1938, nonrecording gage at same site at datum 0.98 ft higher.

AVERAGE DISCHARGE.--41 years (1920-38, 1949-72), 1.45 cfs (1,050 acre-ft per year); median of yearly mean discharges, 0.6 cfs (430 acre-ft per year).

EXTREMES.--Current year: Maximum discharge, 188 cfs Dec. 24 (gage height, 3.57 ft); minimum daily, 0.81 cfs Aug. 19.
Period of record: Maximum discharge, 6,180 cfs Mar. 2, 1938, on basis of slope-area measurement of maximum flow; no flow Aug. 6-8, Sept. 29-30, 1965.

REMARKS.--Records good. No regulation or diversion above station. See schematic diagram of Santa Ana River basin.

DISCHARGE, IN CUBIC FEET PER SECOND, WATER YEAR OCTOBER 1971 TO SEPTEMBER 1972

DAY	OCT	NOV	DEC	JAN	FEB	MAR	APR	MAY	JUN	JUL	AUG	SEP
1	1.1	1.4	1.6	3.2	2.0	1.8	1.6	1.4	1.2	.99	1.1	.97
2	1.1	1.3	1.6	2.7	1.9	1.8	1.6	1.4	1.2	.99	1.0	.99
3	1.2	1.3	1.6	2.5	1.9	1.8	1.6	1.5	1.2	.99	.99	.99
4	1.1	1.3	1.6	2.3	1.9	1.8	1.6	1.5	1.2	.99	.99	.93
5	1.1	1.3	1.6	2.2	1.9	1.8	1.6	1.5	1.2	.99	.98	.93
6	1.1	1.4	1.6	2.2	1.9	1.8	1.6	1.5	1.2	.99	.99	.97
7	1.1	1.4	1.6	2.1	1.9	1.8	1.6	1.5	1.2	.99	.97	.97
8	1.0	1.5	1.6	2.1	1.9	1.8	1.6	1.5	1.2	1.0	.97	.97
9	1.0	1.5	1.6	2.1	1.9	1.8	1.6	1.5	1.2	1.1	.97	.99
10	1.1	1.5	1.5	2.2	1.9	1.8	1.6	1.5	1.1	1.2	.97	.99
11	1.1	1.6	1.5	2.2	1.9	1.8	1.6	1.5	1.1	1.2	.98	.94
12	1.2	1.8	1.5	2.2	1.8	1.8	1.6	1.4	1.1	1.2	.99	.93
13	1.2	1.8	1.4	2.2	1.8	1.8	1.6	1.4	1.1	1.1	.99	.90
14	1.3	1.4	1.3	2.2	1.8	1.8	1.5	1.4	1.1	1.2	.98	.92
15	1.5	1.4	1.4	2.2	1.8	1.8	1.6	1.4	1.1	1.2	.97	.90
16	1.6	1.4	1.4	2.2	1.8	1.8	1.5	1.4	1.1	1.1	.96	.88
17	1.6	1.4	1.6	2.2	1.8	1.8	1.5	1.5	1.1	1.1	.93	.89
18	1.6	1.5	1.6	2.2	1.8	1.8	1.6	1.5	1.1	1.1	.88	.96
19	1.5	1.5	1.5	2.2	1.8	1.8	1.6	1.5	.99	1.1	.81	.97
20	1.4	1.5	1.6	2.2	1.8	1.8	1.6	1.5	1.1	1.1	.84	.97
21	1.4	1.5	1.6	2.2	1.8	1.8	1.5	1.5	1.1	1.1	.84	.93
22	1.4	1.6	2.9	2.2	1.8	1.8	1.5	1.5	1.1	1.0	.93	.90
23	1.4	1.5	1.4	2.2	1.8	1.8	1.5	1.5	1.1	1.1	.94	.94
24	1.7	1.4	60	2.2	1.8	1.8	1.5	1.5	1.1	1.2	.99	.99
25	1.5	1.5	32	2.2	1.8	1.8	1.5	1.5	1.1	1.2	.99	.99
26	1.5	1.4	3.7	2.2	1.8	1.8	1.5	1.5	1.1	1.2	.99	.99
27	1.6	1.4	2.7	2.2	1.8	1.6	1.5	1.5	.99	1.2	.99	.99
28	2.0	1.4	3.1	2.2	1.8	1.6	1.5	1.4	.99	1.1	.96	.99
29	1.4	1.6	3.7	2.2	1.8	1.6	1.5	1.2	.99	1.1	.96	.97
30	1.4	1.6	3.8	2.1	------	1.6	1.5	1.2	.99	1.1	.95	.97
31	1.4	------	3.5	2.1	------	1.6	------	1.2	------	1.1	.97	------
TOTAL	41.6	44.1	149.1	69.6	53.4	54.8	46.7	44.8	33.35	34.03	29.77	28.62
MEAN	1.34	1.47	4.81	2.25	1.84	1.77	1.56	1.45	1.11	1.10	.96	.95
MAX	2.0	1.8	60	3.2	2.0	1.8	1.6	1.5	1.2	1.2	1.1	.99
MIN	1.0	1.3	1.3	2.1	1.8	1.6	1.5	1.2	.99	.99	.81	.88
AC-FT	83	87	296	138	106	109	93	89	66	68	59	57

CAL YR 1971 TOTAL 785.70 MEAN 2.15 MAX 60 MIN 1.0 AC-FT 1,560
WTR YR 1972 TOTAL 629.87 MEAN 1.72 MAX 60 MIN .81 AC-FT 1,250

PEAK DISCHARGE (BASE, 80 CFS).--Dec. 24 (1230) 188 cfs (3.57 ft).

11063510 CAJON CREEK BELOW LONE PINE CREEK, NEAR KEENBROOK, CALIF.

LOCATION.--Lat 34°15'58", long 117°27'47", in NE¼NW¼ sec.13, T.2 N., R.6 W., San Bernardino County, on right bank 25 ft downstream from confluence with Lone Pine Creek, 1.1 miles north of Keenbrook.

DRAINAGE AREA.--55.8 sq mi.

PERIOD OF RECORD.--October 1971 to September 1972.

GAGE.--Water-stage recorder. Altitude of gage is 2,600 ft (from topographic map).

EXTREMES.--Current year: Maximum discharge, 898 cfs Dec. 25 (gage height, 10.63 ft, from floodmark); minimum daily, 2.6 cfs Nov. 20-24, Nov. 28 to Dec. 3.

REMARKS.--Records good except those for periods of no gage-height record, which are fair. No regulation or diversion above station. See schematic diagram of Santa Ana River basin.

DISCHARGE, IN CUBIC FEET PER SECOND, WATER YEAR OCTOBER 1971 TO SEPTEMBER 1972

DAY	OCT	NOV	DEC	JAN	FEB	MAR	APR	MAY	JUN	JUL	AUG	SEP
1	4.3	4.1	2.6	14	8.7	7.6	6.0	6.0	4.3	4.1	3.5	3.0
2	4.3	4.1	2.6	13	8.7	7.5	6.0	5.8	4.3	4.1	3.5	3.0
3	4.8	4.1	2.6	12	8.7	7.5	6.0	5.6	4.3	4.1	3.5	3.0
4	4.8	4.1	2.8	11	8.7	7.4	6.0	5.6	4.3	3.9	3.5	2.8
5	4.8	4.1	3.5	11	8.7	7.4	6.0	5.6	4.1	3.7	3.4	2.8
6	4.6	4.3	4.8	11	8.6	7.3	6.0	5.6	4.1	3.7	3.4	3.3
7	4.6	4.3	5.0	10	8.6	7.3	6.0	5.6	4.1	3.7	3.4	2.8
8	4.6	4.3	4.8	10	8.6	7.2	6.0	5.6	4.1	3.7	3.4	4.1
9	4.6	4.3	4.8	10	8.6	7.2	6.0	5.6	4.1	3.5	3.3	3.9
10	5.1	4.3	4.8	10	8.6	7.2	6.0	5.6	4.1	3.7	3.3	3.9
11	5.6	4.3	4.8	10	8.5	7.2	6.0	5.6	4.1	3.9	3.3	3.9
12	4.8	3.9	4.8	10	8.5	7.2	6.0	5.6	4.1	3.9	3.3	3.9
13	4.8	3.2	5.0	9.8	8.5	7.2	6.0	5.3	4.1	3.9	3.2	3.9
14	4.8	3.2	5.0	9.8	8.4	6.9	6.0	4.8	4.1	3.9	3.2	3.9
15	5.6	3.2	5.0	9.8	8.4	6.9	6.0	4.8	4.1	3.9	3.2	3.9
16	6.3	3.2	5.0	9.8	8.2	6.9	6.0	4.8	4.1	3.9	3.2	3.7
17	6.3	3.2	5.0	9.8	8.2	6.9	6.0	4.8	4.1	3.8	3.1	3.9
18	6.0	3.2	5.0	9.8	8.1	6.9	6.0	5.0	4.1	3.8	3.1	3.9
19	6.0	3.2	5.3	9.0	8.1	6.9	6.0	5.0	4.1	3.8	3.1	3.9
20	5.8	2.6	5.3	9.0	8.0	6.6	6.0	5.0	4.1	3.8	3.1	3.9
21	5.8	2.6	5.6	9.0	8.0	6.6	6.0	5.0	4.1	3.7	3.0	3.9
22	5.8	2.6	23	9.0	8.0	6.3	6.0	5.0	4.1	3.7	3.0	3.9
23	5.6	2.6	7.8	9.0	7.9	6.3	6.0	5.0	4.1	3.7	3.0	3.9
24	6.2	2.6	346	9.0	7.9	6.3	6.0	5.0	4.1	3.7	2.8	3.9
25	4.3	3.0	250	9.0	7.8	6.3	6.0	5.0	4.1	3.7	2.8	3.9
26	3.9	3.0	20	9.0	7.8	6.3	6.0	5.0	4.1	3.6	2.8	3.7
27	4.1	3.0	13	9.0	7.7	6.3	6.0	5.0	4.1	3.6	2.8	3.7
28	4.3	2.6	15	8.7	7.7	6.3	6.0	4.8	4.1	3.6	3.0	3.7
29	4.3	2.6	18	8.7	7.6	6.3	6.0	4.6	4.1	3.6	3.0	3.7
30	4.3	2.6	19	8.7	------	6.0	6.0	4.3	4.1	3.6	2.8	3.7
31	4.1	------	16	8.7	------	6.0	------	4.3	------	3.5	3.0	------
TOTAL	155.2	102.4	821.9	306.6	239.8	212.2	180.0	160.3	123.8	116.8	98.0	109.4
MEAN	5.01	3.41	26.5	9.89	8.27	6.85	6.00	5.17	4.13	3.77	3.16	3.65
MAX	6.3	4.3	346	14	8.7	7.6	6.0	6.0	4.3	4.1	3.5	4.1
MIN	3.9	2.6	2.6	8.7	7.6	6.0	6.0	4.3	4.1	3.5	2.8	2.8
AC-FT	308	203	1,630	608	476	421	357	318	246	232	194	217

WTR YR 1972 TOTAL 2,626.4 MEAN 7.18 MAX 346 MIN 2.6 AC-FT 5,210

PEAK DISCHARGE (BASE, 150 CFS).--Dec. 24 (time unknown) 610 cfs (10.10 ft); Dec. 25 (1800) 898 cfs (10.63 ft).

NOTE.--No gage-height record Feb. 2 to Mar. 7 and July 15 to Aug. 20.

11063680 DEVIL CANYON CREEK NEAR SAN BERNARDINO, CALIF.

LOCATION.--Lat 34°12'12", long 117°20'02", in Muscupiabe Grant, San Bernardino County, on right bank 1.0 mile downstream from confluence of East Fork and West Fork, and 7.0 miles northwest of San Bernardino.

DRAINAGE AREA.--5.61 sq mi.

PERIOD OF RECORD.--November 1911 to September 1912, October 1913 to September 1914, December 1919 to current year. Monthly figures only for January 1914, published in WSP 1315-B.

GAGE.--Water-stage recorder. Broad-crested weir since July 1925 (affected by debris in most years) on creek; flowmeter on diversion. Altitude of gage is 1,900 ft (from topographic map). Prior to December 1919, nonrecording gage at site 500 ft downstream at different datum. Since July 2, 1969, supplementary gage at site 0.4 mile upstream at different datum.

AVERAGE DISCHARGE (Creek only).--53 years (1913-14, 1920-72), 1.87 cfs (1,350 acre-ft per year); median of yearly mean discharges, 0.8 cfs (580 acre-ft per year).
(Combined creek and diversion).--39 years (1913-14, 1934-72), 3.56 cfs (2,580 acre-ft per year); median of yearly mean discharges, 2.3 cfs (1,700 acre-ft per year).

EXTREMES.--Current year: Maximum discharge, 322 cfs Dec. 24 (gage height, 5.26 ft, from floodmark); no flow Sept. 22-30.
1913-14, 1919 to current year: Maximum discharge, 3,720 cfs Jan. 25, 1969 (gage height, 5.40 ft), on basis of slope-area measurement of maximum flow; no flow at times in most years.

REMARKS.--Records fair except those for period of no gage-height record, which are poor. No regulation above station. City of San Bernardino diverts above station for municipal supply. See schematic diagram of Santa Ana River basin.

COOPERATION.--Records of diversion furnished by city of San Bernardino.

DISCHARGE, IN CUBIC FEET PER SECOND, WATER YEAR OCTOBER 1971 TO SEPTEMBER 1972

DAY	OCT	NOV	DEC	JAN	FEB	MAR	APR	MAY	JUN	JUL	AUG	SEP
1	.69	.71	.64	3.8	1.1	.84	.69	.42	.44	.58	.10	.23
2	.69	.87	.64	2.7	1.1	.80	.65	.47	.41	.58	.12	.23
3	.69	.93	.74	2.0	1.1	.80	.69	.57	.41	.58	.12	.27
4	.67	.85	.71	1.7	1.1	.84	.69	.56	.41	.58	.14	.27
5	.64	.88	.64	1.5	1.2	.83	.58	.58	.41	.58	.14	.27
6	.64	.86	.58	1.3	1.4	.74	.57	.58	.41	.58	.14	.27
7	.64	.99	.73	1.2	1.2	.75	.59	.58	.41	.58	.36	.27
8	.64	.84	.62	1.1	1.1	.74	.59	.55	.44	.58	.08	.27
9	.64	.85	.58	1.0	1.1	.62	.59	.48	.47	.58	.27	.23
10	.64	.88	.58	1.0	1.1	.61	.59	.41	.47	.58	1.1	.23
11	.64	.74	.52	.79	1.0	.58	.60	.51	.41	.57	.41	.30
12	.64	.98	.52	.75	1.1	.57	.57	.51	.43	.57	.30	.30
13	.64	.67	.57	.81	1.0	.57	.56	.45	.45	.56	.20	.27
14	.57	.60	.58	.82	1.0	.59	.56	.44	.46	.55	.37	.27
15	.52	.60	.56	1.0	1.1	.59	.56	.44	.41	.54	.53	.27
16	.55	.83	.50	1.0	1.1	.55	.54	.45	.41	.54	.69	.27
17	.69	.86	.55	.89	.95	.58	.52	.38	.44	.53	.75	.27
18	.69	.88	.56	.69	.88	.58	.50	.36	.47	.52	.68	.27
19	.67	.89	.58	.70	.86	.59	.44	.41	.44	.52	.59	.27
20	.61	.84	.58	.83	.88	.58	.44	.40	.44	.52	.41	.36
21	.59	.80	.61	1.1	.91	.58	.47	.30	.50	.30	.36	.27
22	.60	.75	5.1	1.0	.95	.58	.46	.30	.42	.10	.36	0
23	.58	.69	2.2	.86	.86	.61	.45	.33	.43	.12	.40	0
24	2.7	.69	110	.90	.86	.61	.47	.36	.45	.14	.41	0
25	.99	.64	55	.99	.86	.61	.42	.30	.47	.17	.45	0
26	.65	.67	22	1.3	.86	.60	.42	.42	.49	.14	.46	0
27	1.2	.69	17	1.1	.91	.63	.37	.48	.54	.10	.50	0
28	1.9	.69	8.8	1.0	.95	.64	.39	.45	.47	.10	.55	0
29	1.3	.69	6.4	1.1	.84	.71	.38	.44	.49	.08	.55	0
30	.84	.64	6.9	1.2	------	.72	.38	.43	.52	.08	.46	0
31	.63	------	5.5	1.2	------	.68	------	.42	------	.10	.23	------
TOTAL	24.78	23.50	251.49	37.33	29.37	20.32	15.73	13.78	13.42	12.65	12.23	5.66
MEAN	.80	.78	8.11	1.20	1.01	.66	.52	.44	.45	.41	.39	.19
MAX	2.7	.99	110	3.8	1.4	.84	.69	.58	.54	.58	1.1	.36
MIN	.52	.60	.50	.69	.84	.55	.37	.30	.41	.08	.08	0
AC-FT	49	47	499	74	58	40	31	27	27	25	24	11
(a)	76	85	532	154	121	91	75	65	58	47	45	53

CAL YR 1971 TOTAL 697.43 MEAN 1.91 MAX 110 MIN .30 AC-FT 1,380 AC-FT a 1,920
WTR YR 1972 TOTAL 460.26 MEAN 1.26 MAX 110 MIN 0 AC-FT 913 AC-FT a 1,400

PEAK DISCHARGE (BASE, 25 CFS).--Oct. 24 (time unknown) 35 cfs (3.24 ft); Dec. 24 (1515) 322 cfs (5.26 ft).

a Combined discharge, in acre-ft, of Devil Canyon Creek and city of San Bernardino diversion.

NOTE.--No gage-height record Dec. 23-25.

11065000 LYTLE CREEK AT COLTON, CALIF.

LOCATION.--Lat 34°04'44", long 117°18'17", in San Bernardino Grant, San Bernardino County, on right bank 400 ft downstream from Colton Avenue, 1,930 ft upstream from outlet end of channel, and 1.3 miles northeast of Colton.

DRAINAGE AREA.--172 sq mi.

PERIOD OF RECORD.--October 1957 to current year.

GAGE.--Water-stage recorder. Datum of gage is 974.67 ft above mean sea level (Corps of Engineers bench mark).

AVERAGE DISCHARGE.--15 years, 7.19 cfs (5,210 acre-ft per year); median of yearly mean discharges, 1.3 cfs (940 acre-ft per year).

EXTREMES.--Current year: Maximum discharge, 2,830 cfs Dec. 24 (gage height, 4.87 ft); no flow most of year. Period of record: Maximum discharge, 16,800 cfs Jan. 25, 1969 (gage height, 13.6 ft, from floodmarks), from rating curve extended above 4,200 cfs on basis of discharge for design flood at gage height 21.4 ft; no flow most of each year.

REMARKS.--Records good except those below 1 cfs, which are poor. Flow partly regulated by Lytle Creek spreading grounds 3.2 miles upstream. Diversions above station for irrigation, power development, domestic use, and ground-water replenishment. See schematic diagram of Santa Ana River basin.

DISCHARGE, IN CUBIC FEET PER SECOND, WATER YEAR OCTOBER 1971 TO SEPTEMBER 1972

DAY	OCT	NOV	DEC	JAN	FEB	MAR	APR	MAY	JUN	JUL	AUG	SEP
1	0	0	0			0			0		0	
2	0	0	0			0			0		0	
3	0	0	0			3.6			0		0	
4	0	0	0			2.4			0		0	
5	0	0	0			0			0		0	
6	0	0	0			0			0		0	
7	0	0	.12			0			0		0	
8	0	0	0			0			0		0	
9	0	0	0			0			0		0	
10	0	0	0			0			0		0	
11	0	0	0			0			0		0	
12	0	.73	0			0			0		.17	
13	0	0	.03			0			0		0	
14	0	0	0			0			0		0	
15	0	0	0			0			0		0	
16	.06	0	0			0			0		0	
17	.02	0	0			0			0		0	
18	0	0	0			0			0		0	
19	0	0	0			0			0		0	
20	0	0	0			0			.10		0	
21	0	0	0			0			0		0	
22	0	0	3.8			0			0		0	
23	0	0	0			0			0		0	
24	2.2	0	319			0			0		0	
25	0	0	128			0			0		0	
26	0	0	49			0			0		0	
27	0	0	59			0			0		0	
28	.28	0	11			0			0		0	
29	0	0	0			0			0		0	
30	0	0	0		------	0			0		0	
31	0	------	0		------	0	------		------		0	------
TOTAL	2.56	.73	569.95	0	0	6.0	0	0	.10	0	.17	0
MEAN	.083	.024	18.4	0	0	.19	0	0	.003	0	.006	0
MAX	2.2	.73	319	0	0	3.6	0	0	.10	0	.17	0
MIN	0	0	0	0	0	0	0	0	0	0	0	0
AC-FT	5.1	1.5	1,130	0	0	12	0	0	.2	0	.3	0

CAL YR 1971 TOTAL 612.66 MEAN 1.68 MAX 319 MIN 0 AC-FT 1,220
WTR YR 1972 TOTAL 579.51 MEAN 1.58 MAX 319 MIN 0 AC-FT 1,150

11066440 SANTA ANA RIVER AT MISSION BOULEVARD, AT RIVERSIDE, CALIF.

LOCATION.--Lat 33°59'28", long 117°23'36", in Jurupa Grant, Riverside County, near right bank on downstream end of pier of Mission Boulevard Bridge between Rubidoux and Riverside.

DRAINAGE AREA.--810 sq mi.

PERIOD OF RECORD.--February 1971 to current year.

GAGE.--Water-stage recorder. Datum of gage is 758.52 ft above mean sea level.

EXTREMES.--Current year: Maximum discharge, 5,850 cfs Dec. 24 (gage height, 10.85 ft); no flow most of year. Period of record: Maximum discharge, 5,850 cfs Dec. 24, 1971 (gage height, 10.85 ft); no flow most of each year.

REMARKS.--Records fair. This is a project station the purpose of which is to record surface flow entering Riverside Narrows from upper Santa Ana River drainage. See schematic diagram of Santa Ana River basin.

DISCHARGE, IN CUBIC FEET PER SECOND, WATER YEAR OCTOBER 1971 TO SEPTEMBER 1972

DAY	OCT	NOV	DEC	JAN	FEB	MAR	APR	MAY	JUN	JUL	AUG	SEP
1	0		0									
2	0		0									
3	0		0									
4	0		0									
5	0		0									
6	0		0									
7	0		0									
8	0		0									
9	0		0									
10	0		0									
11	0		0									
12	0		0									
13	0		0									
14	0		0									
15	0		0									
16	0		0									
17	0		0									
18	0		0									
19	0		0									
20	0		0									
21	0		0									
22	0		28									
23	0		22									
24	8.5		1,100									
25	2.4		415									
26	0		301									
27	0		104									
28	0		0									
29	0		0									
30	0		0		------							
31	0	------	0		------		------		------			------
TOTAL	10.9	0	1,970	0	0	0	0	0	0	0	0	0
MEAN	.35	0	63.5	0	0	0	0	0	0	0	0	0
MAX	8.5	0	1,100	0	0	0	0	0	0	0	0	0
MIN	0	0	0	0	0	0	0	0	0	0	0	0
AC-FT	22	0	3,910	0	0	0	0	0	0	0	0	0

WTR YR 1972 TOTAL 1,980.9 MEAN 5.41 MAX 1,100 MIN 0 AC-FT 3,930

PEAK DISCHARGE (BASE, 300 CFS)

DATE	TIME	G.H.	DISCHARGE	DATE	TIME	G.H.	DISCHARGE
12-24	1800	10.85	5,850	12-27	1800	9.65	483
12-26	0500	9.25	728				

11066460 SANTA ANA RIVER AT MWD CROSSING, NEAR ARLINGTON, CALIF.

LOCATION.--Lat 33°58'04", long 117°26'46", in NE¼NE¼SW¼ sec.30, T.2 S., R.5 W., Riverside County, on left bank 300 ft upstream from MWD crossing, 0.7 mile downstream from Union Pacific Railroad bridge, 1.2 miles upstream from bridge on Van Buren Boulevard, and 3.3 miles north of Arlington.

DRAINAGE AREA.--854 sq mi.

PERIOD OF RECORD.--March 1970 to current year.

GAGE.--Water-stage recorder. Altitude of gage is 685 ft (from topographic map).

EXTREMES.--Current year: Maximum discharge, 5,290 cfs Dec. 24 (gage height, 10.81 ft), from rating extended above 600 cfs by flood routing; minimum daily, 17 cfs May 31, Sept. 30.
Period of record: Maximum discharge, 5,300 cfs Nov. 29, 1970 (gage height, 10.93 ft), result of slope-conveyance measurement; minimum daily, 17 cfs Jan. 1, 1971, May 31, Sept. 30, 1972.

REMARKS.--Records fair. Flow partly regulated by Big Bear Lake (see sta 11049000). Natural streamflow affected by ground-water withdrawals, diversions for irrigation, and return flows from irrigated areas. Records of chemical analyses for the current year are published in Part 2 of this report. See schematic diagram of Santa Ana River basin.

DISCHARGE, IN CUBIC FEET PER SECOND, WATER YEAR OCTOBER 1971 TO SEPTEMBER 1972

DAY	OCT	NOV	DEC	JAN	FEB	MAR	APR	MAY	JUN	JUL	AUG	SEP
1	20	25	24	28	24	18	25	22	18	24	18	22
2	20	25	26	22	25	22	23	21	20	23	19	21
3	19	24	26	19	24	23	22	22	20	22	19	23
4	20	25	26	21	24	22	21	22	21	22	19	22
5	20	24	25	22	25	24	22	22	22	21	20	22
6	21	25	25	21	23	23	23	22	23	19	20	22
7	20	25	24	23	22	24	24	23	24	18	20	23
8	21	24	23	26	22	25	24	23	25	18	20	24
9	21	25	23	27	20	25	25	23	25	18	20	22
10	20	25	23	30	22	25	25	25	26	18	20	22
11	21	26	22	31	21	25	24	25	25	18	20	21
12	21	29	27	29	21	23	26	24	25	19	34	20
13	21	26	23	27	22	25	26	24	25	19	19	20
14	21	26	22	26	23	24	25	23	25	20	19	20
15	22	26	23	25	25	24	24	23	25	21	19	22
16	27	26	23	23	24	22	23	23	25	19	18	20
17	30	25	23	22	23	22	24	23	25	18	18	20
18	26	26	23	21	24	21	24	23	25	18	19	20
19	26	25	24	24	24	22	23	24	25	20	19	21
20	25	25	24	25	22	22	23	24	25	20	20	21
21	24	24	23	24	23	24	23	21	25	20	19	20
22	24	25	53	25	22	25	22	21	25	18	19	20
23	24	25	60	24	23	27	22	22	26	19	20	20
24	31	25	1,280	24	23	25	22	21	25	19	21	22
25	38	24	900	25	24	27	23	22	25	18	21	21
26	24	24	516	25	23	25	23	22	26	19	22	18
27	24	24	230	25	24	24	21	22	24	19	22	21
28	25	24	110	26	25	23	21	22	24	19	21	21
29	24	26	43	27	22	24	21	21	25	19	21	18
30	24	26	38	24	------	25	22	18	24	18	21	17
31	24	------	30	25	------	24	------	17	------	20	20	------
TOTAL	728	754	3,762	766	669	734	696	690	723	603	627	626
MEAN	23.5	25.1	121	24.7	23.1	23.7	23.2	22.3	24.1	19.5	20.2	20.9
MAX	38	29	1,280	31	25	27	26	25	26	24	34	24
MIN	19	24	22	19	20	18	21	17	18	18	18	17
AC-FT	1,440	1,500	7,460	1,520	1,330	1,460	1,380	1,370	1,430	1,200	1,240	1,240

CAL YR 1971 TOTAL 11,888 MEAN 32.6 MAX 1,280 MIN 17 AC-FT 23,580
WTR YR 1972 TOTAL 11,378 MEAN 31.1 MAX 1,280 MIN 17 AC-FT 22,570

PEAK DISCHARGE (BASE, 500 CFS)

DATE	TIME	G.H.	DISCHARGE	DATE	TIME	G.H.	DISCHARGE
12-24	1915	10.81	5,290	12-27	1915	8.04	990
12-26	0200	8.37	1,400				

11066480 RIVERSIDE WATER QUALITY CONTROL PLANT AT RIVERSIDE NARROWS, NEAR ARLINGTON, CALIF.

LOCATION.--Lat 33°57'53", long 117°27'26", in SE¼NE¼SE¼ sec.25, T.2 S., R.6 W., Riverside County, at effluent end of chlorine contact chambers, 0.4 mile upstream from Van Buren Boulevard, and 3.1 miles northwest of Arlington.

PERIOD OF RECORD.--October 1947 to current year. Prior to May 25, 1967, published as "Sheehan ditch."

GAGE.--Water-stage recorders and concrete controls for plants Nos. 1 and 2. Altitude of gage is 690 ft (from topographic map).

EXTREMES.--Period of record: Maximum daily discharge, 32 cfs Apr. 6, 1969; minimum daily, 17 cfs May 11, June 8, 1969.

REMARKS.--Records good. Discharge reported herein is total effluent from city of Riverside's Water Quality Control Plants Nos. 1 and 2, released to river 0.4 mile upstream from Santa Ana River at Riverside Narrows (see sta 11066500). Records of chemical analyses for the current year are published in Part 2 of this report.

DISCHARGE, IN CUBIC FEET PER SECOND, WATER YEAR OCTOBER 1971 TO SEPTEMBER 1972

DAY	OCT	NOV	DEC	JAN	FEB	MAR	APR	MAY	JUN	JUL	AUG	SEP
1	26	30	26	23	26	26	25	28	29	25	28	27
2	26	29	26	24	26	26	23	28	30	24	28	24
3	24	30	26	26	27	26	26	27	27	27	28	22
4	28	30	25	26	26	26	26	27	25	24	28	24
5	27	28	24	26	24	25	26	27	30	27	26	27
6	27	27	26	26	25	26	25	25	29	28	24	26
7	27	26	26	26	26	26	26	25	28	28	27	26
8	27	30	26	25	26	26	25	28	28	27	27	26
9	26	29	25	24	26	26	24	28	27	25	27	25
10	25	28	26	27	26	27	27	28	27	28	27	24
11	28	28	25	26	26	26	27	28	25	28	27	26
12	27	27	24	26	25	23	27	28	29	28	27	26
13	27	26	25	26	25	27	26	26	28	28	25	25
14	27	25	25	26	27	27	27	25	27	28	28	26
15	26	27	25	24	26	26	25	30	28	26	27	26
16	25	26	26	24	26	26	24	29	28	24	27	23
17	25	27	25	25	27	27	28	27	26	28	27	24
18	28	26	25	26	26	26	27	26	25	27	27	26
19	27	25	24	26	25	24	27	27	28	27	25	25
20	27	25	25	26	23	27	28	27	28	27	23	25
21	26	25	26	25	27	27	27	26	29	27	27	25
22	26	27	26	25	26	27	25	28	26	25	27	26
23	25	26	25	24	26	27	24	28	27	24	26	24
24	23	27	29	27	27	27	28	28	25	27	26	23
25	27	23	24	26	26	25	27	28	25	27	26	26
26	26	23	24	26	26	24	27	26	27	27	24	26
27	26	23	26	26	24	27	28	26	28	27	22	26
28	26	24	27	26	26	27	27	25	28	28	26	25
29	26	26	26	26	26	27	26	26	27	26	26	25
30	26	26	26	24	------	27	26	29	28	25	26	21
31	24	------	26	27	------	27	------	29	------	28	26	------
TOTAL	811	799	790	790	748	811	784	843	822	825	815	750
MEAN	26.2	26.6	25.5	25.5	25.8	26.2	26.1	27.2	27.4	26.6	26.3	25.0
MAX	28	30	29	27	27	27	28	30	30	28	28	27
MIN	23	23	24	23	23	23	23	25	25	24	22	21
AC-FT	1,610	1,580	1,570	1,570	1,480	1,610	1,560	1,670	1,630	1,640	1,620	1,490

CAL YR 1971 TOTAL 9,380 MEAN 25.7 MAX 30 MIN 21 AC-FT 18,610
WTR YR 1972 TOTAL 9,588 MEAN 26.2 MAX 30 MIN 21 AC-FT 19,020

11066500 SANTA ANA RIVER AT RIVERSIDE NARROWS, NEAR ARLINGTON, CALIF.

LOCATION.--Lat 33°57'53", long 117°27'55", in SW¼NE¼SW¼ sec.25, T.2 S., R.6 W., Riverside County, on right bank at downstream side of Van Buren Boulevard bridge, 1.8 miles downstream from Union Pacific Railroad bridge, 3.3 miles northwest of Arlington, and 12 miles upstream from Temescal Creek.

DRAINAGE AREA.--855 sq mi.

PERIOD OF RECORD.--October 1927 to current year. Monthly discharge only for October 1927 to January 1929, December 1937 to April 1938, published in WSP 1315-B.

GAGE.--Water-stage recorder. Datum of gage is 666.87 ft above mean sea level (levels by Riverside County Engineer). See WSP 1735 for history of changes prior to Jan. 17, 1955.

EXTREMES.--Current year: Maximum discharge, 5,200 cfs Dec. 24 (gage height, 10.55 ft), by flood routing; minimum daily, 42 cfs May 14, Sept. 30.

Period of record: Maximum discharge, 100,000 cfs Mar. 2, 1938, on basis of slope-area measurement of maximum flow; minimum daily, 11 cfs Oct. 17, 26, 1966.

Flood of Jan. 22, 1862, 320,000 cfs, by slope-conveyance measurement at site 9.3 miles upstream. Stage at that site was 5 ft higher than Mar. 2, 1938.

REMARKS.--Records fair. Flow partly regulated by Big Bear Lake (see sta 11049000). Natural streamflow affected by ground-water withdrawals, diversions for irrigation, and return flow from irrigated areas. Riverside Water Quality Control Plant released to river 0.4 mile upstream. See schematic diagram of Santa Ana River basin.

DISCHARGE, IN CUBIC FEET PER SECOND, WATER YEAR OCTOBER 1971 TO SEPTEMBER 1972

DAY	OCT	NOV	DEC	JAN	FEB	MAR	APR	MAY	JUN	JUL	AUG	SEP
1	49	55	50	51	52	49	46	46	47	44	49	47
2	46	54	50	46	52	49	46	50	48	43	46	44
3	46	54	49	47	50	50	48	52	48	46	46	44
4	48	52	50	47	51	49	47	52	48	45	46	45
5	47	50	46	48	49	50	49	50	55	49	47	48
6	49	52	47	47	48	50	48	45	52	48	45	50
7	47	50	48	49	51	51	51	46	52	47	44	49
8	47	53	48	51	50	52	51	49	53	45	47	47
9	46	53	48	51	50	52	50	50	54	44	47	44
10	46	53	48	57	49	52	52	48	53	46	48	44
11	48	52	49	57	49	51	50	47	54	46	48	45
12	48	58	47	56	45	46	50	46	57	47	62	45
13	49	54	49	53	48	52	50	44	56	48	45	45
14	49	52	49	54	50	51	50	42	57	47	46	45
15	50	52	48	49	49	50	49	46	60	45	47	43
16	52	52	48	47	50	48	48	46	52	44	45	43
17	55	52	48	47	48	49	52	46	43	45	45	44
18	52	52	47	47	47	52	52	47	45	46	46	45
19	50	53	46	50	47	48	52	48	47	46	45	46
20	50	50	47	51	46	52	50	47	49	46	44	45
21	50	48	50	49	49	52	50	46	56	46	45	44
22	50	49	81	50	48	52	46	48	48	45	46	45
23	50	50	81	48	49	54	48	48	47	45	46	44
24	52	50	1,390	51	48	57	52	49	45	46	45	45
25	74	47	900	51	50	47	50	52	46	45	45	45
26	53	47	550	51	50	46	50	47	47	46	45	43
27	52	46	260	51	47	50	46	44	46	46	45	45
28	51	46	150	52	50	52	47	44	43	46	48	46
29	49	48	75	53	47	52	49	46	46	46	47	44
30	49	48	65	48	------	51	48	48	46	45	49	42
31	48	------	58	52	------	47	------	49	------	47	50	------
TOTAL	1,552	1,532	4,622	1,561	1,419	1,563	1,477	1,468	1,500	1,420	1,449	1,351
MEAN	50.1	51.1	149	50.4	48.9	50.4	49.2	47.4	50.0	45.8	46.7	45.0
MAX	74	58	1,390	57	52	57	52	52	60	49	62	50
MIN	46	46	46	46	45	46	46	42	43	43	44	42
AC-FT	3,080	3,040	9,170	3,100	2,810	3,100	2,930	2,910	2,980	2,820	2,870	2,680

CAL YR 1971 TOTAL 21,123 MEAN 57.9 MAX 1,390 MIN 40 AC-FT 41,900
WTR YR 1972 TOTAL 20,914 MEAN 57.1 MAX 1,390 MIN 42 AC-FT 41,480

PEAK DISCHARGE (BASE, 500 CFS)

DATE	TIME	G.H.	DISCHARGE	DATE	TIME	G.H.	DISCHARGE
12-24	2200	10.55	5,200	12-27	unknown	unknown	about 1,000
12-26	unknown	unknown	about 1,500				

NOTE.--No gage-height record Dec. 24 to May 10.

11067000 DAY CREEK NEAR ETIWANDA, CALIF.

LOCATION.--Lat 34°11'06", long 117°32'20", in NW¼NW¼SW¼ sec.8, T.1 N., R.6 W., San Bernardino County, on left bank 0.5 mile downstream from confluence of two main forks, and 4 miles north of Etiwanda.

DRAINAGE AREA.--4.56 sq mi.

PERIOD OF RECORD.--October 1927 to September 1972 (discontinued). Combined records of creek and diversion, October 1950 to September 1972 (discontinued). Monthly discharge only for some periods, published in WSP 1315-B.

GAGE.--Water-stage recorder. Broad-crested weir since September 1938 on creek; water-stage recorder and Parshall flume on diversion. Altitude of gage is 2,870 ft (from topographic map). See WSP 1315-B for history of changes prior to Sept. 2, 1938.

AVERAGE DISCHARGE (Creek only).--45 years, 4.09 cfs (2,960 acre-ft per year); median of yearly mean discharges, 2.0 cfs (1,400 acre-ft per year).
(Combined).--22 years, 5.11 cfs (3,700 acre-ft per year); median of yearly mean discharges, 2.9 cfs (2,100 acre-ft per year).

EXTREMES (Creek only).--Current year: Maximum discharge, 105 cfs Dec. 24 (gage height, 4.51 ft); minimum daily, 1.0 cfs Sept. 1.
Period of record: Maximum discharge, 9,450 cfs Jan. 25, 1969 (gage height, 9.90 ft), from rating curve extended above 340 cfs on basis of slope-area measurements at gage heights 3.78, 4.90, and 9.90 ft; no flow Oct. 5 to Nov. 1, 1950.
(Combined).--Current year: Maximum discharge, 105 cfs Dec. 24; minimum daily, 1.0 cfs Sept. 1.
Period of record: Maximum discharge, 9,450 cfs Jan. 25, 1969; minimum daily, 0.30 cfs for several days in 1961 and 1963.

REMARKS.--Records poor. No regulation above station. Etiwanda Water Co. has diverted water above station during entire period of record. No diversion during current year. An infiltration gallery, unwatering the gravel in the bed of the stream at gaging station, produced 544 acre-ft during year. See schematic diagram of Santa Ana River basin.

DISCHARGE, IN CUBIC FEET PER SECOND, WATER YEAR OCTOBER 1971 TO SEPTEMBER 1972

DAY	OCT	NOV	DEC	JAN	FEB	MAR	APR	MAY	JUN	JUL	AUG	SEP
1	1.7	1.2	2.2	9.0	3.6	3.2	2.5	2.4	1.8	1.4	1.3	1.0
2	1.7	1.4	2.2	8.6	3.5	3.2	2.5	2.3	1.8	1.5	1.3	1.1
3	1.7	1.5	2.4	8.2	3.5	3.2	2.5	2.3	1.8	1.5	1.3	1.3
4	1.5	1.6	2.6	8.0	3.5	3.2	2.5	2.3	1.8	1.5	1.3	1.3
5	1.5	1.7	2.6	7.6	3.5	3.2	2.5	2.2	1.8	1.6	1.3	1.1
6	1.6	1.8	2.5	7.2	3.5	3.2	2.5	2.2	1.8	1.5	1.2	1.4
7	1.5	1.9	2.0	6.8	3.5	3.2	2.6	2.2	1.8	1.5	1.2	1.4
8	1.6	2.0	1.7	6.6	3.5	3.2	2.6	2.2	1.8	1.5	1.2	1.3
9	1.6	2.2	2.1	6.2	3.5	3.2	2.6	2.1	1.8	1.6	1.2	1.3
10	1.8	2.2	2.5	6.0	3.5	3.2	2.6	2.1	1.8	1.6	1.2	1.4
11	1.8	2.3	2.3	5.8	3.4	3.5	2.6	2.1	1.8	1.6	1.2	1.5
12	1.8	3.0	2.2	5.6	3.3	3.6	2.6	2.0	1.8	1.5	1.2	1.5
13	1.9	2.6	2.4	5.4	3.5	3.5	2.6	2.0	1.8	1.5	1.2	1.3
14	1.9	2.6	2.3	5.2	3.4	3.2	2.6	2.0	1.7	1.5	1.2	1.4
15	2.0	2.2	2.5	5.0	3.5	3.0	2.5	2.0	1.7	1.5	1.2	1.3
16	2.0	2.1	2.0	4.8	3.4	3.4	2.5	2.0	1.8	1.5	1.2	1.3
17	1.9	2.1	1.9	4.6	3.3	3.3	2.5	2.0	1.8	1.5	1.1	1.4
18	2.0	2.0	2.0	4.5	3.3	3.0	2.5	2.0	1.8	1.5	1.1	1.4
19	2.0	1.8	2.0	4.4	3.2	3.0	2.5	2.0	1.8	1.5	1.1	1.7
20	2.1	1.8	2.2	4.3	3.2	2.9	2.5	2.0	1.9	1.5	1.1	1.5
21	2.2	2.0	2.2	4.2	3.2	2.7	2.5	1.9	1.8	1.5	1.1	1.3
22	2.3	2.0	5.8	4.1	3.2	2.8	2.5	1.9	1.8	1.5	1.1	1.3
23	2.4	2.2	3.8	4.0	3.2	2.7	2.5	1.9	1.9	1.5	1.1	1.3
24	2.3	2.3	27	3.9	3.2	2.7	2.5	1.9	1.9	1.5	1.1	1.4
25	2.2	2.3	20	3.9	3.2	2.7	2.5	1.9	1.8	1.5	1.1	1.5
26	2.0	2.3	15	3.8	3.2	2.6	2.4	1.9	1.7	1.4	1.1	1.5
27	1.9	2.7	13	3.7	3.2	2.6	2.4	1.9	1.7	1.4	1.1	1.5
28	1.7	2.7	12	3.7	3.2	2.5	2.4	1.9	1.7	1.4	1.1	1.5
29	1.1	2.8	11	3.6	3.2	2.5	2.4	1.9	1.6	1.4	1.1	1.5
30	1.1	2.5	10	3.6	------	2.5	2.4	1.9	1.5	1.4	1.1	1.5
31	1.2	------	9.6	3.6	------	2.4	------	1.9	------	1.4	1.1	------
TOTAL	56.0	63.8	174.0	165.9	97.4	93.1	75.3	63.3	53.3	46.2	36.2	41.2
MEAN	1.81	2.13	5.61	5.35	3.36	3.00	2.51	2.04	1.78	1.49	1.17	1.37
MAX	2.4	3.0	27	9.0	3.6	3.6	2.6	2.4	1.9	1.6	1.3	1.7
MIN	1.1	1.2	1.7	3.6	3.2	2.4	2.4	1.9	1.5	1.4	1.1	1.0
AC-FT	111	127	345	329	193	185	149	126	106	92	72	82

CAL YR 1971 TOTAL 1,077.7 MEAN 2.95 MAX 27 MIN 1.1 AC-FT 2,140
WTR YR 1972 TOTAL 965.7 MEAN 2.64 MAX 27 MIN 1.0 AC-FT 1,920

PEAK DISCHARGE (BASE, 25 CFS).--Dec. 24 (1200) 105 cfs (4.51 ft).

11067890 SANTA ANA RIVER AT PRADO PARK, NEAR CORONA, CALIF.

LOCATION.--Lat 33°55'42", long 117°35'44", in Jurupa Grant, Riverside County, in Prado Park on right bank 0.4 mile upstream from Auburndale Bridge, and 4.1 miles northwest of Corona.

DRAINAGE AREA.--1,010 sq mi.

PERIOD OF RECORD.--March 1971 to current year. Records May 1930 to November 1966 (irrigation seasons only), October 1966 to September 1968 at site 0.4 mile downstream (at Auburndale Bridge, sta 11068000), equivalent if diversion to Durkee ditch added.

GAGE.--Water-stage recorder. Altitude of gage is 560 ft (from topographic map).

EXTREMES.--Current year: Maximum discharge, 4,100 cfs Dec. 24 (gage height, about 10.6 ft); minimum daily, 14 cfs Sept. 23.
Period of record: Maximum discharge, 4,100 cfs Dec. 24, 1971 (gage height, about 10.6 ft); minimum daily, 10 cfs Aug. 7, Sept. 23, 1971.

REMARKS.--Records good except those for Dec. 22 to Jan. 22, which are poor. Regulation and diversions same as sta 11066500. Sheehan ditch water returned to river above station. See schematic diagram of Santa Ana River basin.

DISCHARGE, IN CUBIC FEET PER SECOND, WATER YEAR OCTOBER 1971 TO SEPTEMBER 1972

DAY	OCT	NOV	DEC	JAN	FEB	MAR	APR	MAY	JUN	JUL	AUG	SEP
1	30	37	55	71	53	50	41	30	29	27	21	29
2	23	37	54	67	52	51	40	30	27	26	21	29
3	22	38	56	69	47	48	39	32	23	26	24	28
4	25	39	54	66	46	48	38	35	25	26	22	28
5	25	38	53	61	51	50	38	38	35	24	22	26
6	22	35	55	61	49	51	37	42	52	26	19	23
7	25	35	61	62	47	50	37	40	47	29	19	25
8	26	37	46	64	45	49	37	39	45	25	19	25
9	26	38	49	66	49	48	37	36	43	23	19	23
10	27	40	50	70	49	47	38	36	41	20	18	23
11	27	42	50	64	50	46	38	37	36	22	23	25
12	31	58	46	60	48	45	37	32	41	25	28	24
13	28	55	54	56	50	44	36	28	47	27	39	25
14	28	52	50	54	55	43	36	24	45	28	37	24
15	27	47	43	52	57	42	35	26	38	29	36	25
16	33	42	41	50	53	44	34	29	38	27	34	24
17	43	43	42	50	49	45	36	27	39	22	33	22
18	42	43	41	52	58	46	35	29	36	23	30	23
19	40	39	43	54	50	45	42	31	34	22	27	23
20	40	39	43	53	46	43	41	29	33	23	27	21
21	38	40	42	52	46	43	37	31	43	24	27	21
22	39	46	82	52	50	42	35	39	36	21	27	19
23	39	46	130	49	47	42	33	35	37	20	28	14
24	43	48	360	53	46	41	37	36	34	20	28	16
25	84	52	1,350	54	46	41	36	36	29	19	33	20
26	43	52	600	49	47	41	32	33	27	20	33	24
27	44	52	372	48	44	40	31	35	26	21	33	28
28	44	53	254	52	47	40	33	30	26	19	33	33
29	37	59	110	52	46	39	31	31	25	15	32	34
30	35	58	80	46	------	40	28	30	27	22	31	33
31	38	------	82	49	------	42	------	32	------	24	29	------
TOTAL	1,074	1,340	4,448	1,758	1,423	1,386	1,085	1,018	1,064	725	852	737
MEAN	34.6	44.7	143	56.7	49.1	44.7	36.2	32.8	35.5	23.4	27.5	24.6
MAX	84	59	1,350	71	58	51	42	42	52	29	39	34
MIN	22	35	41	46	44	39	28	24	23	15	18	14
AC-FT	2,130	2,660	8,820	3,490	2,820	2,750	2,150	2,020	2,110	1,440	1,690	1,460

WTR YR 1972 TOTAL 16,910 MEAN 46.2 MAX 1,350 MIN 14 AC-FT 33,540

PEAK DISCHARGE (BASE, 500 CFS)

DATE	TIME	G.H.	DISCHARGE	DATE	TIME	G.H.	DISCHARGE
12-24	2300	about 10.6	4,100	12-27	2145	5.01	1,050
12-26	0900	6.02	2,060				

NOTE.--No gage-height record Dec. 24, 25, Mar. 8 to Apr. 30.

11069000 LAKE HEMET NEAR IDYLLWILD, CALIF.

LOCATION.--Lat 33°39'56", long 116°42'19", in SE¼SW¼NE¼ sec.7, T.6 S., R.3 E., Riverside County, on upstream face near right end of dam on South Fork San Jacinto River, 5 miles southeast of Idyllwild, and 6.5 miles upstream from mouth.

DRAINAGE AREA.--65.6 sq mi.

PERIOD OF RECORD.--October 1961 to current year.

GAGE.--Nonrecording gage read once daily. Datum of gage is 4,201.5 ft above mean sea level (levels by Lake Hemet Municipal Water District).

EXTREMES.--Current year: Maximum contents observed, 6,570 acre-ft Oct. 1 (elevation, 4,316.83 ft); minimum, 5,560 acre-ft Sept. 25-30 (elevation, 4,312.75 ft).
Period of record: Maximum contents, 13,879 acre-ft Feb. 25, 1969 (elevation, 4,337.58 ft); minimum, 264 acre-ft Nov. 19, 1962, Nov. 19, 1963 (elevation, 4,266.9 ft).

REMARKS.--Lake is formed by single-arch dam. Dam was completed to a height of 110 ft in 1893; raised to 122.5 ft in 1895, and to 135 ft in 1923. Capacity table is dated February 1932 (furnished by Lake Hemet Municipal Water District). Lowest sluice gate silted (elevation, 4,222.6 ft). Capacity below spillway level (elevation, 4,333.0 ft), 11,882 acre-ft. Water is released from lake to South Fork San Jacinto River for domestic use and irrigation in the Hemet-San Jacinto Valley. See schematic diagram of Santa Ana River basin.

COOPERATION.--Elevations furnished by Lake Hemet Municipal Water District.

MONTHEND ELEVATION AND CONTENTS, WATER YEAR OCTOBER 1971 TO SEPTEMBER 1972

Date	Elevation (feet)a	Contents (acre-feet)	Change in contents (acre-feet)
Sept. 30	4,316.92	6,590	-
Oct. 31	4,315.25	6,170	-420
Nov. 30	4,313.92	5,840	-330
Dec. 31	4,315.33	6,190	+350
CAL YR 1971	-	-	-1,510
Jan. 31	4,315.75	6,290	+100
Feb. 29	4,316.08	6,380	+90
Mar. 31	4,316.25	6,420	+40
Apr. 30	4,316.00	6,360	-60
May 31	4,315.50	6,230	-130
June 30	4,314.92	6,090	-140
July 31	4,313.58	5,760	-330
Aug. 31	4,313.25	5,680	-80
Sept. 30	4,312.75	5,560	-120
WTR YR 1972	-	-	-1,030

a Elevation at 0800.

11069500 SAN JACINTO RIVER NEAR SAN JACINTO, CALIF.

LOCATION.--Lat 33°44'10", long 116°49'26", in NE¼NE¼SE¼ sec.13, T.5 S., R.1 E., Riverside County, on right bank 350 ft upstream from bridge on State Highway 74, 1 mile downstream from North Fork, and 8.3 miles southeast of San Jacinto.

DRAINAGE AREA.--141 sq mi.

PERIOD OF RECORD.--October 1920 to February 1927, March 1927 to current year. Records since Oct. 1, 1969, equivalent to prior records if lower diversion is deducted from flow past station. Combined records of river and diversions, October 1948 to current year. Monthly discharge only for October 1920 and July to September 1926, published in WSP 1315-B.

GAGE.--Water-stage recorder on river; water-stage recorder on upper canal; nonrecording gage on pipeline. Datum of gage is 1,982.75 ft above mean sea level (Corps of Engineers bench mark). See WSP 1735 for history of changes prior to Jan. 23, 1948. Prior to Oct. 1, 1969, at site 350 ft downstream at same datum.

AVERAGE DISCHARGE (River only).--48 years (1920-26, 1927-69), 18.0 cfs (13,040 acre-ft per year); median of yearly mean discharges, 6.0 cfs (4,300 acre-ft per year).

(Combined river and diversions).--24 years (1948-72), 19.3 cfs (13,980 acre-ft per year); median of yearly mean discharges, 9.0 cfs (6,500 acre-ft per year).

EXTREMES (River only).--Current year: Maximum discharge, 368 cfs Dec. 25 (gage height, 10.99 ft); no flow for many days.

Period of record: Maximum discharge, 45,000 cfs Feb. 16, 1927, on basis of slope-area measurement of maximum flow; no flow for several months in each year.

(Combined flow).--Current year: Maximum discharge, 374 cfs Dec. 25; minimum daily, 0.31 cfs Dec. 11.

Period of record: Maximum discharge, 7,420 cfs Jan. 25, 1969; no flow at times in 1951, 1952, and 1957.

REMARKS.--Records good. Flow partly regulated by Lake Hemet (see sta 11069000). Lake Hemet Municipal Water District's upper canal diverts 4.0 miles above station. Fairview Land and Water Co.'s pipeline diverts water above station for domestic use. Diversion above station began prior to 1920. See schematic diagram of Santa Ana River basin. Combined records are equivalent for period of record. For records of combined daily discharge of San Jacinto River and diversions, see following page.

COOPERATION.--Records of Fairview Land and Water Co.'s pipeline furnished by Lake Hemet Municipal Water District.

DISCHARGE, IN CUBIC FEET PER SECOND, WATER YEAR OCTOBER 1971 TO SEPTEMBER 1972

DAY	OCT	NOV	DEC	JAN	FEB	MAR	APR	MAY	JUN	JUL	AUG	SEP
1	0	.01	.01	11	.73	.31	.30	.08	.03	.11	0	0
2	0	.01	.01	8.2	1.0	.31	.30	.11	.03	.10	0	0
3	0	.01	.01	7.2	1.0	.37	.32	.11	.04	.10	0	0
4	.01	.01	.01	6.0	1.1	.43	.31	.10	.04	.07	0	0
5	.05	.01	.01	4.2	3.0	.82	.37	.10	.03	.06	0	.13
6	.16	.01	.01	4.0	11	.50	.31	.11	.02	.05	0	0
7	.25	.01	.01	3.5	4.2	.37	.31	.14	.01	.03	0	0
8	.31	.01	.01	3.0	3.7	.37	.25	.13	.01	.03	0	0
9	.25	.01	1.5	2.8	3.7	.35	.20	.08	.02	.02	0	0
10	.16	.01	2.5	2.5	3.5	.35	.01	.09	.03	.01	0	0
11	.12	.03	.12	1.9	3.3	.35	0	.11	.03	0	.56	0
12	.12	.03	.12	1.7	3.3	.34	0	.08	.02	0	6.8	0
13	.05	.03	.12	1.8	3.3	.34	.05	.05	.01	0	1.3	0
14	.03	.03	.12	1.7	3.5	.34	.08	.08	.01	0	.03	0
15	.03	.03	.08	1.5	3.7	.34	.08	.12	.01	0	0	0
16	.12	.03	.08	1.5	4.0	.34	.12	.12	.01	0	0	0
17	.16	.03	.08	1.4	4.2	.33	.16	.12	.01	0	0	0
18	.16	.03	.08	1.3	4.4	.33	.16	.12	.02	0	.05	0
19	.08	.03	.08	1.3	4.4	.33	.20	.12	.02	0	0	0
20	.05	.03	.05	1.2	4.4	.32	.20	.05	.01	0	0	0
21	.05	.03	.05	1.1	2.8	.32	.20	.12	.02	0	0	0
22	.05	.03	8.2	1.1	1.9	.32	.12	.12	.02	0	0	0
23	.05	.03	63	1.0	1.0	.32	.16	.12	.05	0	.03	0
24	.03	.01	34	.82	1.2	.32	.16	.16	.14	0	.06	0
25	.03	.01	193	.82	1.8	.31	.12	.16	.31	0	0	0
26	.03	.01	139	.82	1.5	.31	.08	.12	.33	0	0	0
27	.05	.01	58	.91	1.1	.31	.08	.05	.14	0	0	0
28	.05	.01	39	1.0	1.0	.31	.08	.05	.14	0	0	0
29	.08	.01	26	.91	1.2	.31	.12	.05	.14	0	0	0
30	.05	.01	19	.82	------	.31	.08	.05	.13	0	0	0
31	.03	------	15	.91	------	.31	------	.05	------	0	0	------
TOTAL	2.61	.56	599.26	77.91	84.93	10.99	4.93	3.07	1.83	.58	8.83	.13
MEAN	.084	.019	19.3	2.51	2.93	.35	.16	.099	.061	.019	.28	.004
MAX	.31	.03	193	11	11	.82	.37	.16	.33	.11	6.8	.13
MIN	0	.01	.01	.82	.73	.31	0	.05	.01	0	0	0
AC-FT	5.2	1.1	1,190	155	168	22	9.8	6.1	3.6	1.2	18	.3

CAL YR 1971 TOTAL 967.65 MEAN 2.65 MAX 193 MIN 0 AC-FT 1,920
WTR YR 1972 TOTAL 795.63 MEAN 2.17 MAX 193 MIN 0 AC-FT 1,580

PEAK DISCHARGE (BASE, 100 CFS).--Dec. 25 (1230) 368 cfs (10.99 ft); Aug. 12 (1100) 145 cfs (9.82 ft).

11069500 SAN JACINTO RIVER NEAR SAN JACINTO, CALIF.--Continued

COMBINED DISCHARGE, IN CUBIC FEET PER SECOND, OF SAN JACINTO RIVER, LAKE HEMET WATER CO.'S UPPER AND LOWER CANALS, AND FAIRVIEW LAND AND WATER CO.'S PIPELINE, NEAR SAN JACINTO, CALIF., WATER YEAR OCTOBER 1971 TO SEPTEMBER 1972

DAY	OCT	NOV	DEC	JAN	FEB	MAR	APR	MAY	JUN	JUL	AUG	SEP
1	4.5	3.5	4.0	12	.92	.58	.56	3.1	2.7	1.7	1.4	1.9
2	4.5	3.2	4.0	9.4	1.2	.54	.49	2.9	2.5	1.5	1.3	1.8
3	6.2	3.1	4.6	9.7	1.2	.59	.51	2.9	3.0	1.4	1.4	1.8
4	5.7	3.0	4.8	9.4	1.3	.64	2.7	3.4	3.5	1.6	1.6	2.1
5	4.4	3.1	4.4	6.4	3.4	1.0	3.9	3.7	3.5	1.7	1.8	2.2
6	3.7	3.2	4.2	4.8	12	.69	3.9	3.9	4.3	1.6	1.9	2.5
7	3.6	5.4	4.4	4.2	4.6	.56	4.2	4.0	5.2	1.5	1.9	2.7
8	7.2	5.0	4.0	3.7	4.0	.56	4.0	3.9	4.5	1.6	1.8	2.6
9	10	4.5	4.0	3.4	4.0	.54	4.1	3.9	4.2	1.6	1.9	2.6
10	10	4.0	2.7	3.2	3.8	.54	4.0	3.8	4.0	1.6	1.9	2.8
11	10	6.7	.31	2.5	3.6	.54	3.9	3.5	3.6	1.6	4.4	2.8
12	10	9.1	1.6	2.3	3.6	.53	3.7	3.3	3.2	2.3	11	2.6
13	10	8.8	2.5	2.4	3.6	.67	3.6	3.2	3.1	2.8	3.6	2.5
14	10	8.8	2.5	2.3	3.8	1.6	3.6	3.0	3.0	3.0	2.9	2.5
15	10	9.0	2.5	2.0	4.0	2.2	3.2	2.5	2.7	3.0	2.7	2.2
16	11	8.7	2.5	2.0	4.2	2.0	2.8	2.4	2.4	2.1	2.5	2.1
17	12	7.9	2.5	1.9	4.4	1.9	3.2	2.7	2.3	1.7	2.3	2.0
18	11	4.8	2.5	1.8	4.6	2.2	3.6	4.5	2.5	2.0	2.4	2.4
19	4.6	4.3	2.5	1.8	4.6	2.2	4.1	5.6	2.3	2.2	2.3	2.6
20	3.4	4.2	2.4	1.7	4.6	2.2	5.7	6.8	2.5	2.3	2.1	2.5
21	3.0	3.9	2.0	1.6	3.0	2.1	5.2	6.4	3.2	2.3	2.1	2.3
22	2.8	3.8	11	1.6	2.1	2.1	5.1	4.7	3.4	2.2	2.0	2.3
23	2.8	3.8	70	1.5	1.2	2.1	3.8	4.3	3.6	2.0	2.0	2.4
24	3.2	3.7	43	1.3	1.4	1.7	3.9	4.2	3.2	2.0	2.4	2.7
25	7.1	3.7	199	1.3	2.0	3.0	3.8	3.9	3.0	2.0	2.5	2.7
26	6.6	3.8	145	1.3	1.7	2.1	4.0	3.7	2.9	1.9	2.4	2.6
27	4.0	3.8	61	1.4	1.3	2.2	4.0	3.5	2.6	1.8	2.5	2.5
28	4.0	3.8	42	1.5	1.2	2.2	4.0	3.4	2.4	1.6	2.4	2.5
29	4.0	3.9	28	1.4	1.5	2.2	4.0	3.2	2.2	1.7	2.3	2.5
30	3.8	4.0	21	1.2	------	2.2	3.6	3.0	2.0	1.8	2.4	2.3
31	3.5	------	17	1.1	------	1.3	------	2.8	------	1.9	2.7	------
TOTAL	196.6	148.5	701.91	102.1	92.82	45.48	107.16	116.1	93.5	60.0	78.8	72.0
MEAN	6.34	4.95	22.6	3.29	3.20	1.47	3.57	3.75	3.12	1.94	2.54	2.40
MAX	12	9.1	199	12	12	3.0	5.7	6.8	5.2	3.0	11	2.8
MIN	2.8	3.0	.31	1.1	.92	.53	.49	2.4	2.0	1.4	1.3	1.8
AC-FT	390	295	1,390	203	184	90	213	230	185	119	156	143

CAL YR 1971 TOTAL 2,409.70 MEAN 6.60 MAX 199 MIN .31 AC-FT 4,780
WTR YR 1972 TOTAL 1,814.97 MEAN 4.96 MAX 199 MIN .31 AC-FT 3,600

PEAK DISCHARGE (BASE, 150 CFS).--Dec. 25 (1230) 374 cfs; Aug. 12 (1100) 167 cfs.

11070050 BAUTISTA CREEK AT VALLE VISTA, CALIF.

LOCATION.--Lat 33°44'04", long 116°53'33", in SE¼NE¼SE¼ sec.17, T.5 S., R.1 E., Riverside County, on left levee of flood channel, 1.0 mile south of Valle Vista.

DRAINAGE AREA.--47.2 sq mi.

PERIOD OF RECORD.--October 1969 to current year.

GAGE.--Water-stage recorder. Altitude of gage is 1,835 ft (from topographic map).

EXTREMES.--Current year: Maximum discharge, 50.8 cfs Aug. 12 (gage height, 1.33 ft), from rating curve extended as explained below; no flow for part of year.
Period of record: Maximum discharge, 302 cfs Mar. 6, 1970 (gage height, 1.94 ft), from rating curve based on computation of flow in concrete-lined channel at gage heights 1.50, 2.00, and 3.00 ft; no flow for many days in each year.

REMARKS.--Records fair. No regulation above station. Diversion above station for irrigation of about 15 acres. Some infiltration by detention dam, 1.5 miles upstream.

DISCHARGE, IN CUBIC FEET PER SECOND, WATER YEAR OCTOBER 1971 TO SEPTEMBER 1972

DAY	OCT	NOV	DEC	JAN	FEB	MAR	APR	MAY	JUN	JUL	AUG	SEP
1			0	0	.04	.01	0	.01	0	.01	0	
2			0	0	.06	0	.01	0	.04	0	.01	
3			0	0	.09	0	0	0	.01	.01	0	
4			0	0	0	0	.01	0	0	0	0	
5			.02	0	2.0	0	.01	.03	.09	0	.20	
6			.31	0	6.2	0	.02	0	.15	0	0	
7			.45	0	1.0	0	0	.01	.06	0	0	
8			1.0	0	.21	0	.01	.02	.01	.02	.01	
9			1.0	0	.29	.01	0	0	0	.02	0	
10			.45	0	.26	.01	.01	0	0	0	.01	
11			.31	0	.18	.02	.02	0	0	0	.48	
12			1.0	0	.14	.02	.01	0	.01	0	1.7	
13			1.0	0	.15	.01	.04	0	0	0	0	
14			.45	0	.12	.02	.03	.12	.02	0	0	
15			.31	0	.05	.02	.05	0	.02	.01	0	
16			.31	.01	.05	.03	.03	.01	0	.08	0	
17			.60	.02	.12	.02	.01	.01	0	0	0	
18			.60	0	.12	0	.01	0	0	0	0	
19			.45	0	.09	0	.03	.06	0	0	0	
20			1.0	0	.06	0	.01	.12	.02	0	0	
21			1.4	0	.04	0	0	.02	.03	.01	0	
22			1.4	.01	.03	0	0	0	0	.04	0	
23			.81	.02	.03	0	0	0	0	0	0	
24			1.7	.05	.04	.01	0	.01	0	.06	0	
25			2.6	.18	.05	0	0	.01	0	0	0	
26			.81	.08	0	0	.01	.01	0	.04	0	
27			1.4	.07	.01	.01	.01	.03	0	0	0	
28			1.0	.07	0	0	.01	.01	0	0	0	
29			.09	.05	0	.02	0	0	.01	.03	0	
30			.09	.09	------	.11	.01	0	0	.43	0	
31		------	.01	.10	------	.03	------	0	------	.01	0	------
TOTAL	0	0	20.57	.75	11.43	.35	.35	.48	.47	.77	2.41	0
MEAN	0	0	.66	.024	.39	.011	.012	.016	.016	.025	.078	0
MAX	0	0	2.6	.18	6.2	.11	.05	.12	.15	.43	1.7	0
MIN	0	0	0	0	0	0	0	0	0	0	0	0
AC-FT	0	0	41	1.5	23	.7	.7	1.0	.9	1.5	4.8	0

CAL YR 1971 TOTAL 34.75 MEAN .095 MAX 4.2 MIN 0 AC-FT 69
WTR YR 1972 TOTAL 37.58 MEAN .10 MAX 6.2 MIN 0 AC-FT 75

PEAK DISCHARGE (BASE, 25 CFS)

DATE	TIME	G.H.	DISCHARGE	DATE	TIME	G.H.	DISCHARGE
12-25	1815	1.32	48.0	8-12	1000	1.33	50.8
2-6	0100	1.27	35.8				

11070270 PERRIS VALLEY STORM DRAIN AT NUEVO ROAD, NEAR PERRIS, CALIF.

LOCATION.--Lat 33°48'04", long 117°12'19", in SE¼SW¼SW¼ sec.21, T.4 S., R.3 W., Riverside County, 1.9 miles northeast of Perris, and 2.0 miles upstream from San Jacinto River.

DRAINAGE AREA.--93.3 sq mi.

PERIOD OF RECORD.--October 1969 to current year.

GAGE.--Water-stage recorder. Altitude of gage is 1,413 ft (from topographic map).

EXTREMES.--Current year: Maximum discharge, 302 cfs Dec. 27 (gage height, 1.55 ft); no flow most of year.
Period of record: Maximum discharge, 790 cfs Dec. 21, 1970 (gage height, 2.55 ft, from floodmark), from rating curve extended above 400 cfs on basis of slope-area measurement at gage height 6.7 ft; no flow most of each year.
Flood of Feb. 25, 1969, 5,600 cfs (gage height, 6.7 ft, from floodmarks), result of slope-area measurement by Riverside County Flood Control District.

REMARKS.--Records good. Some regulation by percolation basins above station. Extensive pumping for irrigation above station. Rainfall data collected at this site.

DISCHARGE, IN CUBIC FEET PER SECOND, WATER YEAR OCTOBER 1971 TO SEPTEMBER 1972

DAY	OCT	NOV	DEC	JAN	FEB	MAR	APR	MAY	JUN	JUL	AUG	SEP
1			0	1.0								
2			0	.40								
3			0	.10								
4			0	0								
5			0	0								
6			0	0								
7			0	0								
8			0	0								
9			0	0								
10			0	0								
11			0	0								
12			0	0								
13			0	0								
14			0	0								
15			0	0								
16			0	0								
17			0	0								
18			0	0								
19			0	0								
20			0	0								
21			0	0								
22			.11	0								
23			2.7	0								
24			39	0								
25			22	0								
26			12	0								
27			64	0								
28			45	0								
29			11	0								
30			5.1	0	------							
31		------	1.8	0	------		------		------			------
TOTAL	0	0	202.71	1.50	0	0	0	0	0	0	0	0
MEAN	0	0	6.54	.048	0	0	0	0	0	0	0	0
MAX	0	0	64	1.0	0	0	0	0	0	0	0	0
MIN	0	0	0	0	0	0	0	0	0	0	0	0
AC-FT	0	0	402	3.0	0	0	0	0	0	0	0	0
(a)	.17	.03	3.35	0	0	0	.10	.04	.12	.01	.14	.11

CAL YR 1971 TOTAL 214.23 MEAN .59 MAX 64 MIN 0 AC-FT 425
WTR YR 1972 TOTAL 204.21 MEAN .56 MAX 64 MIN 0 AC-FT 405

a Precipitation, in inches.

11070375 SAN JACINTO RIVER AT RAILROAD CANYON WEIR, NEAR ELSINORE, CALIF.

LOCATION.--Lat 33°44'10", long 117°15'08", in SW¼SE¼NW¼ sec.13, T.5 S., R.4 W., Riverside County, on right bank 4.3 miles northeast of Railroad Canyon Dam, and 5.8 miles northeast of Elsinore.

DRAINAGE AREA.--562 sq mi.

PERIOD OF RECORD.--October 1951 to current year. Monthly discharge only prior to October 1971. Daily discharge available in district files.

GAGE.--Water-stage recorder. Altitude of gage is 1,400 ft (from topographic map). Prior to Sept. 28, 1960, at site 0.8 mile upstream at different datum.

AVERAGE DISCHARGE (River only).--21 years, 6.17 cfs (4,470 acre-ft per year); median of yearly mean discharges, 1.3 cfs (940 acre-ft per year).

EXTREMES.--Maximum and minimum discharges for the water years 1952-72 are contained in the following table:

Water year	Date	Maximum (cfs)	Minimum (cfs)	Gage-height (feet)
1952	Jan. 18, 1952	1,570	0	
1953	Undetermined	-	0	
1954	Feb. 15, 1954	94	0	
1955	Jan. 26, 1955	380	0	
1956	Apr. 14, 1956	42	0	
1957	Jan. 13, 1957	150	0	
1958	Apr. 7, 1958	478	0	
1959	Undetermined	-	0	
1960	Jan. 15, 1960	62	0	
1961	Aug. 19, 1961	139	0	
1962	Feb. 19, 1962	236	0	
1963	Sept. 18, 1963	191	0	
1964	Nov. 20, 1963	72	0	
1965	Apr. 8, 1965	332	0	
1966	Nov. 23, 1965	460	0	
1967	Dec. 3, 1966	369	0	
1968	Nov. 20, 1967	320	0	
1969	Feb. 25, 1969	5,330	0	
1970	Mar. 5, 1970	173	0	
1971	Dec. 21, 1970	288	0	
1972	Dec. 27, 1971	162	0	5.11

Period of record: Maximum discharge, 5,330 cfs Feb. 25, 1969, results of runoff study by Riverside County Flood Control and Water Conservation District; no flow for long periods in each year.

REMARKS.--Flow partially regulated by Lake Hemet (see sta 11069000). Diversions for irrigation and domestic use above station. At times imported Colorado River water is discharged into channel above station by Temescal Water Co. or Elsinore Valley Municipal Water District. No imported water discharged into river since Aug. 31, 1970.

COOPERATION.--Records furnished by Riverside County Flood Control and Water Conservation District and reviewed by Geological Survey.

MONTHLY AND YEARLY DISCHARGE, IN ACRE-FEET

WATER YEAR	OCT	NOV	DEC	JAN	FEB	MAR	APR	MAY	JUNE	JULY	AUG	SEPT	TOTAL NATURAL FLOW	TOTAL IMPORTED FLOW
1952	0	0	0	6,790	282	5,530	171	0	0	0	0	0	12,760	0
1953	0	0	0	24	8	438	381	89	0	0	0	0	940	0
1954	0	0	0	365	180	391	14	0	0	0	0	0	950	0
1955	0	0	0	393	0	0	0	0	0	0	0	0	393	0
1956	0	0	0	885	106	0	257	0	0	0	0	0	1,250	0
1957	0	0	0	687	27	0	890	967	0	0	0	1,380	714	3,240
1958	235	0	80	16	691	1,420	7,480	1,640	0	0	0	0	8,770	2,790
1959	0	0	0	0	50	0	0	1,550	1,240	0	0	0	50	2,790
1960	0	0	64	839	1,990	1,080	0	0	0	0	0	100	334	3,740
1961	147	5	0	0	0	738	2,210	2,120	1,000	0	7.6	0	7.6	6,220
1962	0	0	1,240	1,720	702	6.9	0	0	0	0	0	0	1,230	2,440
1963	1,320	1,590	0	0	146	0	0	0	0	0	0	564	710	2,910
1964	0	96	0	47	12,150	13,810	4,840	0	0	0	0	0	228	30,710
1965	814	32	0	0	0	3,810	4,580	773	0	0	0	0	1,150	8,860
1966	0	1,980	540	120	6,750	6,600	0	29	0	0	0	0	2,810	13,200
1967	0	6.9	4,250	844	0	0	767	2,450	0	0	0	0	2,360	5,960
1968	0	644	144	.6	0	162	15	0	1,370	2,250	0	0	1,140	3,450
1969	0	0	0	4,520	36,190	12,400	3,260	165	0	0	0	0	56,540	0
1970	0	0	0	0	73	542	1,670	0	0	0	2,230	0	617	3,900
1971	0	82	589	24	0	0	0	0	0	0	0	0	695	0

11070375 SAN JACINTO RIVER AT RAILROAD CANYON WEIR, NEAR ELSINORE, CALIF.--Continued

DISCHARGE, IN CUBIC FEET PER SECOND, WATER YEAR OCTOBER 1971 TO SEPTEMBER 1972

DAY	OCT	NOV	DEC	JAN	FEB	MAR	APR	MAY	JUN	JUL	AUG	SEP
1			0	.90								
2			0	.60								
3			0	.30								
4			0	0								
5			0	0								
6			0	0								
7			0	0								
8			0	0								
9			0	0								
10			0	0								
11			0	0								
12			0	0								
13			0	0								
14			0	0								
15			0	0								
16			0	0								
17			0	0								
18			0	0								
19			0	0								
20			0	0								
21			0	0								
22			0	0								
23			0	0								
24			0	0								
25			26	0								
26			4.8	0								
27			26	0								
28			40	0								
29			19	0								
30			3.5	0	------							
31		------	1.5	0	------		------		------			------
TOTAL	0	0	120.8	1.80	0	0	0	0	0	0	0	0
MEAN	0	0	3.90	.058	0	0	0	0	0	0	0	0
MAX	0	0	40	.90	0	0	0	0	0	0	0	0
MIN	0	0	0	0	0	0	0	0	0	0	0	0
AC-FT	0	0	240	3.6	0	0	0	0	0	0	0	0

CAL YR 1971 TOTAL 133.10 MEAN .36 MAX 40 MIN 0 AC-FT 264
WTR YR 1972 TOTAL 122.60 MEAN .34 MAX 40 MIN 0 AC-FT 243

11070475 SALT CREEK AT RAILROAD CANYON RESERVOIR, NEAR ELSINORE, CALIF.

LOCATION.--Lat 33°40'42", long 117°14'03", in SW¼SE¼NW¼ sec.6, T.6 S., R.3 W., Riverside County, on left bank at Railroad Canyon Road, 5.1 miles northeast of Elsinore.

DRAINAGE AREA.--122 sq mi (largely noncontributing except during extreme floods).

PERIOD OF RECORD.--October 1969 to current year.

GAGE.--Water-stage recorder. Datum of gage is 1,382.0 ft above mean sea level (levels by Riverside County Flood Control and Water Conservation District).

EXTREMES.--Water year 1970: Maximum discharge, 163 cfs Feb. 11; no flow most of year.
Water year 1971: Maximum discharge, 36 cfs Dec. 21; no flow most of year.
Water year 1972: Maximum discharge, 15 cfs Dec. 28; no flow most of year.
Period of record: Maximum discharge, 163 cfs Feb. 11, 1970; no flow most of each year.
Flood of Feb. 25, 1969, 2,010 cfs, at site 1 mile upstream (from records of Riverside County Flood Control and Water Conservation District).

REMARKS.--No regulation or diversion above station.

COOPERATION.--Records furnished by Riverside County Flood Control and Water Conservation District and reviewed by Geological Survey.

DISCHARGE, IN CUBIC FEET PER SECOND, WATER YEAR OCTOBER 1969 TO SEPTEMBER 1970

DAY	OCT	NOV	DEC	JAN	FEB	MAR	APR	MAY	JUN	JUL	AUG	SEP
1					0	82						
2					0	22						
3					0	9.3						
4					0	3.4						
5					0	13						
6					0	2.5						
7					0	0						
8					0	0						
9					0	0						
10					.10	0						
11					8.3	0						
12					0	0						
13					0	0						
14					0	0						
15					0	0						
16					0	0						
17					0	0						
18					0	0						
19					0	0						
20					0	0						
21					0	0						
22					0	0						
23					0	0						
24					0	0						
25					0	0						
26					0	0						
27					0	0						
28					4.7	0						
29					------	0						
30					------	0						
31		------			------	0	------		------			------
TOTAL	0	0	0	0	13.10	132.2	0	0	0	0	0	0
MEAN	0	0	0	0	.47	4.26	0	0	0	0	0	0
MAX	0	0	0	0	8.3	82	0	0	0	0	0	0
MIN	0	0	0	0	0	0	0	0	0	0	0	0

WTR YR 1970 TOTAL 145.30 MEAN .40 MAX 82 MIN 0 AC-FT 288

11070475 SALT CREEK AT RAILROAD CANYON RESERVOIR, NEAR ELSINORE, CALIF.--Continued

DISCHARGE, IN CUBIC FEET PER SECOND, WATER YEAR OCTOBER 1970 TO SEPTEMBER 1971

DAY	OCT	NOV	DEC	JAN	FEB	MAR	APR	MAY	JUN	JUL	AUG	SEP
1		0	0									
2		0	0									
3		0	0									
4		0	0									
5		0	0									
6		0	0									
7		0	0									
8		0	0									
9		0	0									
10		0	0									
11		0	0									
12		0	0									
13		0	0									
14		0	0									
15		0	0									
16		0	0									
17		0	0									
18		0	0									
19		0	11									
20		0	1.2									
21		0	12									
22		0	7.3									
23		0	1.3									
24		0	0									
25		0	0									
26		0	0									
27		0	0									
28		0	0									
29		0	0		------							
30		4.6	0		------							
31		------	0		------		------		------			------
TOTAL	0	4.6	32.8	0	0	0	0	0	0	0	0	0
MEAN	0	.15	1.06	0	0	0	0	0	0	0	0	0
MAX	0	4.6	12	0	0	0	0	0	0	0	0	0
MIN	0	0	0	0	0	0	0	0	0	0	0	0

CAL YR 1970 TOTAL 182.70 MEAN .50 MAX 82 MIN 0 AC-FT 362
WTR YR 1971 TOTAL 37.40 MEAN .10 MAX 12 MIN 0 AC-FT 74

11070475 SALT CREEK AT RAILROAD CANYON RESERVOIR, NEAR ELSINORE, CALIF.--Continued

DISCHARGE, IN CUBIC FEET PER SECOND, WATER YEAR OCTOBER 1971 TO SEPTEMBER 1972

DAY	OCT	NOV	DEC	JAN	FEB	MAR	APR	MAY	JUN	JUL	AUG	SEP
1			0									
2			0									
3			0									
4			0									
5			0									
6			0									
7			0									
8			0									
9			0									
10			0									
11			0									
12			0									
13			0									
14			0									
15			0									
16			0									
17			0									
18			0									
19			0									
20			0									
21			0									
22			0									
23			0									
24			0									
25			1.3									
26			1.7									
27			2.0									
28			6.1									
29			1.0									
30			0		------							
31		------	0		------		------		------			------
TOTAL	0	0	12.1	0	0	0	0	0	0	0	0	0
MEAN	0	0	.39	0	0	0	0	0	0	0	0	0
MAX	0	0	6.1	0	0	0	0	0	0	0	0	0
MIN	0	0	0	0	0	0	0	0	0	0	0	0
AC-FT	0	0	24	0	0	0	0	0	0	0	0	0

CAL YR 1971 TOTAL 12.1 MEAN .033 MAX 6.1 MIN 0 AC-FT 24
WTR YR 1972 TOTAL 12.1 MEAN .033 MAX 6.1 MIN 0 AC-FT 24

11070500 SAN JACINTO RIVER NEAR ELSINORE, CALIF.

LOCATION.--Lat 33°39'51", long 117°17'35", in SE¼SE¼NE¼ sec.9, T.6 S., R.4 W., Riverside County, on right bank 2 miles east of Elsinore, and 2.1 miles downstream from Railroad Canyon Dam.

DRAINAGE AREA.--723 sq mi (revised).

PERIOD OF RECORD.--January 1916 to current year. Monthly figures 1927-50, adjusted for diversion, published in WSP 1315-B.

GAGE.--Water-stage recorder. Altitude of gage is 1,270 ft (from topographic map). Prior to Feb. 13, 1916, nonrecording gage at site 0.7 mile downstream at different datum. Feb. 13, 1916, to Oct. 27, 1921, nonrecording gage at present site at different datum.

EXTREMES.--Current year: Maximum discharge, 19 cfs Aug. 12 (gage height, 2.77 ft); no flow for many days.
Period of record: Maximum discharge, 16,000 cfs Feb. 17, 1927 (gage height, 11.8 ft), from rating curve extended above 2,000 cfs on basis of slope-area measurement of maximum flow; no flow for several months in most years.

REMARKS.--Records good. Flow partly regulated by Lake Hemet (see sta 11069000) and regulated since 1928 by Railroad Canyon Reservoir (capacity, 12,000 acre-ft) 2.1 miles above station. Diversion for irrigation and domestic use above Railroad Canyon Reservoir. Temescal Water Co. diverted 242 acre-ft during year from Railroad Canyon Reservoir for irrigation below station in vicinity of Corona. See schematic diagram of Santa Ana River basin.

DISCHARGE, IN CUBIC FEET PER SECOND, WATER YEAR OCTOBER 1971 TO SEPTEMBER 1972

DAY	OCT	NOV	DEC	JAN	FEB	MAR	APR	MAY	JUN	JUL	AUG	SEP
1	0	.08	.24	.24	.11	.15	.01		0	0	0	0
2	0	.09	.22	.23	.06	.15	.01		0	0	0	0
3	0	.08	.31	.20	.06	.15	0		0	0	0	0
4	0	.09	.35	.16	.05	.15	0		0	0	0	0
5	0	.09	.28	.15	.08	.15	0		.94	0	0	0
6	0	.09	.28	.16	.12	.10	0		.47	0	0	.01
7	0	.15	.29	.17	.09	.10	0		.01	0	0	.09
8	0	.15	.21	.17	.09	.10	0		.01	0	0	.08
9	0	.12	.20	.17	.09	.10	0		.01	0	0	.09
10	0	.10	.23	.17	.09	.10	0		0	0	0	.09
11	0	.10	.25	.17	.09	.10	0		0	0	0	.07
12	0	.12	.23	.16	.15	.10	0		0	0	2.1	.09
13	0	.15	.30	.13	.15	.10	.01		0	0	.10	.10
14	0	.16	.26	.10	.15	.05	.01		0	0	0	.11
15	.02	.19	.25	.10	.17	.05	.01		0	0	0	.11
16	.02	.14	.21	.11	.18	.05	0		0	0	0	.11
17	.02	.16	.21	.11	.17	.05	0		0	0	0	.08
18	.03	.22	.22	.10	.16	.05	0		0	0	0	.05
19	.05	.10	.22	.20	.15	.05	.01		0	0	0	.01
20	.05	.10	.21	.20	.14	.05	.01		0	0	0	.08
21	.04	.10	.20	1.9	.13	.05	.01		0	0	0	.10
22	.04	.13	.88	2.7	.15	.05	0		0	0	0	.06
23	.03	.17	.58	2.7	.15	.05	0		0	0	0	.03
24	.06	.20	1.3	2.5	.36	.05	0		0	0	0	0
25	.06	.23	2.4	2.5	.15	.04	0		0	0	0	0
26	.10	.23	1.3	2.5	.15	.03	0		0	0	0	.01
27	.13	.17	1.3	1.3	.15	.04	0		0	.01	0	.15
28	.19	.18	2.2	.16	.15	.04	0		0	1.2	0	.19
29	.16	.19	1.1	.17	.15	.03	0		0	1.6	0	.18
30	.08	.24	.42	.17	------	.02	0		0	0	0	.17
31	.06	------	.30	.17	------	.01	------		------	0	0	------
TOTAL	1.14	4.32	16.95	19.97	3.89	2.31	.08	0	1.44	2.81	2.20	2.06
MEAN	.037	.14	.55	.64	.13	.075	.003	0	.048	.091	.071	.069
MAX	.19	.24	2.4	2.7	.36	.15	.01	0	.94	1.6	2.1	.19
MIN	0	.08	.20	.10	.05	.01	0	0	0	0	0	0
AC-FT	2.3	8.6	34	40	7.7	4.6	.2	0	2.9	5.6	4.4	4.1

CAL YR 1971 TOTAL 39.05 MEAN .11 MAX 2.4 MIN 0 AC-FT 77
WTR YR 1972 TOTAL 57.17 MEAN .16 MAX 2.7 MIN 0 AC-FT 113

11072000 TEMESCAL CREEK NEAR CORONA, CALIF.

LOCATION.--Lat 33°50'29", long 117°30'37", in El Sobrante de San Jacinto Grant, Riverside County, on left bank 0.2 mile downstream from unnamed tributary, and 3.8 miles southeast of Corona.

DRAINAGE AREA.--164 sq mi, excludes 768 sq mi above Lake Elsinore.

PERIOD OF RECORD.--October 1927 to current year. Monthly discharge only for the period October 1928 to January 1929, published in WSP 1315-B.

GAGE.--Water-stage recorder. Concrete control since June 12, 1970. Altitude of gage is 730 ft (from topographic map). Prior to Feb. 11, 1943, at datum 6.00 ft higher.

AVERAGE DISCHARGE.--45 years, 3.51 cfs (2,540 acre-ft per year); median of yearly mean discharges, 0.10 cfs (72 acre-ft per year).

EXTREMES.--Current year: Maximum discharge, 170 cfs Dec. 24 (gage height, 9.60 ft, from floodmarks); no flow Oct. 1 to Dec. 17, Dec. 19-21, May 24 to Sept. 30.
Period of record: Maximum discharge, 14,900 cfs Mar. 2, 1938, on basis of slope-area measurement of maximum flow; no flow at times most years.

REMARKS.--Records poor. Flow regulated by several storage reservoirs. Many diversions above station for irrigation. See schematic diagram of Santa Ana River basin.

DISCHARGE, IN CUBIC FEET PER SECOND, WATER YEAR OCTOBER 1971 TO SEPTEMBER 1972

DAY	OCT	NOV	DEC	JAN	FEB	MAR	APR	MAY	JUN	JUL	AUG	SEP
1			0	2.6	1.2	.78	.35	.06				
2			0	2.5	1.2	.76	.35	.06				
3			0	2.5	1.2	.72	.30	.05				
4			0	2.5	1.2	.70	.30	.05				
5			0	2.0	2.0	.70	.30	.05				
6			0	2.0	1.6	.68	.30	.04				
7			0	2.0	1.5	.66	.30	.04				
8			0	2.0	1.4	.64	.30	.04				
9			0	2.0	1.2	.62	.25	.04				
10			0	1.8	1.3	.60	.25	.04				
11			0	1.8	1.2	.58	.25	.03				
12			0	1.6	1.2	.56	.25	.03				
13			0	1.6	1.2	.54	.25	.03				
14			0	1.5	1.1	.52	.20	.03				
15			0	1.5	1.1	.50	.20	.03				
16			0	1.5	1.0	.49	.20	.02				
17			0	1.4	1.0	.48	.20	.02				
18			.20	1.4	1.0	.47	.15	.02				
19			0	1.4	1.0	.46	.15	.02				
20			0	1.3	.98	.45	.15	.02				
21			0	1.3	.92	.43	.14	.01				
22			.10	1.3	.90	.41	.12	.01				
23			.10	1.3	.90	.40	.12	.01				
24			25	1.3	.88	.40	.10	0				
25			12	1.3	.86	.38	.10	0				
26			1.0	1.2	.84	.36	.10	0				
27			13	1.2	.82	.36	.09	0				
28			18	1.2	.82	.35	.08	0				
29			3.3	1.2	.80	.35	.08	0				
30			3.0	1.2	------	.35	.07	0				
31		------	2.8	1.2	------	.35	------	0	------			------
TOTAL	0	0	78.50	50.6	32.32	16.05	6.00	.75	0	0	0	0
MEAN	0	0	2.53	1.63	1.11	.52	.20	.024	0	0	0	0
MAX	0	0	25	2.6	2.0	.78	.35	.06	0	0	0	0
MIN	0	0	0	1.2	.80	.35	.07	0	0	0	0	0
AC-FT	0	0	156	100	64	32	12	1.5	0	0	0	0

CAL YR 1971 TOTAL 547.75 MEAN 1.50 MAX 25 MIN 0 AC-FT 1,090
WTR YR 1972 TOTAL 184.22 MEAN .50 MAX 25 MIN 0 AC-FT 365

NOTE.--No gage-height record Oct. 1 to Nov. 8, Dec. 10 to Sept. 30.

11072200 TEMESCAL CREEK AT CORONA, CALIF.

LOCATION.--Lat 33°53'46", long 117°34'50", in La Sierra Grant, Riverside County, on right bank 0.2 mile downstream from Lincoln Avenue, and 1.0 mile northwest of Corona.

DRAINAGE AREA.--249 sq mi, excludes 768 sq mi above Lake Elsinore.

PERIOD OF RECORD.--December 1967 to current year.

GAGE.--Water-stage recorder. Altitude of gage is 550 ft (from topographic map).

EXTREMES.--Current year: Maximum discharge, 456 cfs Dec. 24 (gage height, 3.13 ft); no flow most of year.
Period of record: Maximum discharge, 8,850 cfs Feb. 25, 1969 (gage height, 8.17 ft, from floodmark), on basis of slope-area measurement of maximum flow; no flow most of each year.
Flood of Mar. 2, 1938, 14,900 cfs, by slope-area measurement at site 3 miles upstream.

REMARKS.--Records fair. Flow regulated by Lake Elsinore and several storage reservoirs. Many diversions for irrigation. Prior to July 22, 1968, effluent from city of Corona disposal plant was released to creek at site 0.5 mile upstream.

DISCHARGE, IN CUBIC FEET PER SECOND, WATER YEAR OCTOBER 1971 TO SEPTEMBER 1972

DAY	OCT	NOV	DEC	JAN	FEB	MAR	APR	MAY	JUN	JUL	AUG	SEP
1			0		0	.29	2.2	1.2	0		0	
2			0		0	.30	2.4	1.2	0		0	
3			0		0	.32	3.8	1.5	0		0	
4			0		0	.35	2.6	1.8	0		0	
5			0		0	.40	2.4	.48	37		0	
6			0		0	.45	2.2	1.2	4.2		0	
7			0		0	.50	1.7	.70	1.0		0	
8			0		0	.60	1.2	.21	.22		0	
9			0		0	5.4	1.2	.09	0		0	
10			0		0	4.0	1.7	.12	0		0	
11			0		0	.50	.70	.19	0		0	
12			0		0	.42	.55	.08	0		15	
13			0		.10	.40	.88	0	0		0	
14			0		.11	.40	1.0	0	0		0	
15			0		.11	.41	1.2	0	0		0	
16			0		.12	.50	.96	0	0		0	
17			0		.13	1.4	1.0	0	0		0	
18			0		.14	.72	1.8	0	0		0	
19			0		.15	.80	2.2	0	0		0	
20			0		.16	.87	.88	0	0		0	
21			0		.17	2.0	.78	0	0		0	
22			29		.18	3.4	.78	0	0		0	
23			0		.19	3.6	.24	0	0		0	
24			87		.20	3.6	.70	0	0		0	
25			28		.22	5.2	.88	0	0		0	
26			3.8		.24	1.2	.96	0	0		0	
27			36		.25	5.5	.88	0	0		0	
28			55		.26	5.5	1.2	0	0		0	
29			.27		.27	3.8	1.3	0	0		0	
30			0		------	4.9	.78	0	0		0	
31		------	0		------	2.4	------	0	------		0	------
TOTAL	0	0	239.07	0	3.00	60.13	41.07	8.77	42.42	0	15	0
MEAN	0	0	7.71	0	.10	1.94	1.37	.28	1.41	0	.48	0
MAX	0	0	87	0	.27	5.5	3.8	1.8	37	0	15	0
MIN	0	0	0	0	0	.29	.24	0	0	0	0	0
AC-FT	0	0	474	0	6.0	119	81	17	84	0	30	0

CAL YR 1971 TOTAL 253.16 MEAN .69 MAX 87 MIN 0 AC-FT 502
WTR YR 1972 TOTAL 409.46 MEAN 1.12 MAX 87 MIN 0 AC-FT 812

11073000 SAN ANTONIO CREEK NEAR CLAREMONT, CALIF.

LOCATION.--Lat 34°12'58", long 117°40'04", in SE¼SW¼NE¼ sec.36, T.2 N., R.8 W., Los Angeles County, on right bank 0.5 mile upstream from Southern California Edison Co.'s Sierra powerplant, and 8.8 miles northeast of Claremont.

DRAINAGE AREA.--16.5 sq mi.

PERIOD OF RECORD.--January 1917 to September 1972 (discontinued); combined records of creek and conduit, March 1901 to December 1916 (fragmentary, published as "near Upland"), January 1917 to September 1972 (discontinued).

GAGE.--Water-stage recorder; broad-crested weir since January 1939 on creek; water-stage recorder and sharp-crested weir on conduit. River pickup discontinued and abandoned Jan. 5, 1969. Datum of gage is 3,396 ft above mean sea level. See WSP 1315-B for history of changes prior to Jan. 9, 1939. Prior to July 28, 1969, at datum 1.0 ft higher.

AVERAGE DISCHARGE (Creek only).--55 years (1917-72), 9.95 cfs (7,210 acre-ft per year); median of yearly mean discharges, 2.6 cfs (1,900 acre-ft per year).
(Combined creek and conduit).--67 years (1901-2, 1903-4, 1905-9, 1910-15, 1916-72), 22.7 cfs (16,450 acre-ft per year); median of yearly mean discharges, 16 cfs (11,600 acre-ft per year).

EXTREMES (Creek only).--Current year: Maximum discharge, 29 cfs Dec. 24 (gage height, 1.42 ft); minimum daily, 0.42 cfs July 15.
Period of record: Maximum discharge, 21,400 cfs Mar. 2, 1938, on basis of slope-area measurement and rainfall-runoff studies; no flow Aug. 24-27, 31, Sept. 1, Oct. 17-21, 1951.
(Combined flow).--Current year: Maximum discharge, 36 cfs Dec. 24; minimum daily, 0.62 cfs Oct. 17, 18, May 28 to June 1.
Period of record: Maximum discharge, 21,400 cfs Mar. 2, 1938; minimum daily, 0.30 cfs Dec. 8-19, 1954, Dec. 12-17, 1963.

REMARKS.--Records good. No regulation above station. See schematic diagram of Santa Ana River basin. For records of combined discharge of San Antonio Creek and Southern California Edison Co.'s Sierra conduit, which diverts from site 0.5 mile above station, see following page.

COOPERATION.--Records of discharge through Sierra conduit furnished by Southern California Edison Co.

DISCHARGE, IN CUBIC FEET PER SECOND, WATER YEAR OCTOBER 1971 TO SEPTEMBER 1972

DAY	OCT	NOV	DEC	JAN	FEB	MAR	APR	MAY	JUN	JUL	AUG	SEP
1	.56	.62	.56	1.7	1.4	1.0	.82	.69	.62	.50	.50	.59
2	.56	.62	.56	1.7	1.5	1.0	.82	.69	.62	.50	.55	.51
3	.56	.62	.56	1.8	1.4	1.0	.82	.69	.62	.50	.49	.55
4	.56	.62	.56	1.7	1.4	1.0	.82	.69	.62	.47	.53	.57
5	.56	.62	.56	1.7	1.4	1.0	.80	.69	.62	.43	.51	.57
6	.56	.62	.56	1.6	1.6	1.0	.76	.69	.62	.43	.54	.59
7	.56	.62	.56	1.6	1.6	1.0	.76	.69	.62	.43	.52	.67
8	.56	.59	.58	1.6	1.6	.95	.76	.69	.62	.43	.54	.65
9	.56	.56	.61	1.6	1.6	.95	.76	.69	.62	.43	.53	.66
10	.54	.56	.56	1.6	1.6	.95	.76	.69	.69	.43	.55	.67
11	.50	.56	.56	1.7	1.5	.95	.76	.69	.66	.43	.52	.69
12	.50	.70	.62	1.7	1.6	.95	.76	.69	.62	.43	.58	.69
13	.53	.69	.65	1.6	1.6	.95	.76	.69	.62	.43	.59	.69
14	.56	.69	.62	1.6	1.6	.95	.76	.69	.62	.43	.58	.65
15	.58	.68	.62	1.5	1.7	.95	.76	.69	.62	.42	.62	.67
16	.62	.62	.62	1.4	1.7	.91	.76	.69	.62	.43	.62	.76
17	.62	.62	.62	1.4	1.7	.88	.76	.69	.62	.43	.61	.75
18	.62	.62	.62	1.5	1.7	.87	.86	.69	.62	.43	.62	.74
19	.62	.62	.62	1.5	1.6	.87	.87	.69	.60	.43	.62	.76
20	.62	.62	.69	1.6	1.4	.87	.85	.76	.56	.43	.69	.72
21	.62	.62	.70	1.6	1.2	.85	.84	.76	.56	.46	.67	.75
22	.62	.62	1.4	1.6	1.2	.82	.82	.76	.56	.54	.60	.74
23	.62	.62	1.1	1.5	1.2	.82	.82	.74	.56	.54	.58	.75
24	.68	.62	14	1.4	1.2	.82	.82	.69	.61	.54	.60	.72
25	.69	.56	14	1.4	1.2	.82	.79	.68	.62	.55	.60	.75
26	.69	.56	10	1.4	1.2	.82	.76	.69	.62	.51	.61	.81
27	.69	.56	4.5	1.4	1.2	.82	.76	.67	.58	.62	.66	.82
28	.62	.56	2.6	1.5	1.1	.82	.76	.62	.49	.58	.62	.81
29	.62	.56	2.1	1.5	1.1	.82	.76	.62	.50	.61	.61	.82
30	.62	.56	1.9	1.4	------	.82	.74	.62	.50	.57	.58	.80
31	.62	------	1.8	1.4	------	.82	------	.62	------	.54	.59	------
TOTAL	18.44	18.31	66.01	48.2	41.8	28.05	23.65	21.34	18.03	14.90	18.03	20.92
MEAN	.59	.61	2.13	1.55	1.44	.90	.79	.69	.60	.48	.58	.70
MAX	.69	.70	14	1.8	1.7	1.0	.87	.76	.69	.62	.69	.82
MIN	.50	.56	.56	1.4	1.1	.82	.74	.62	.49	.42	.49	.51
AC-FT	37	36	131	96	83	56	47	42	36	30	36	41

CAL YR 1971 TOTAL 2,915.56 MEAN 7.99 MAX 19 MIN .50 AC-FT 5,780
WTR YR 1972 TOTAL 337.68 MEAN .92 MAX 14 MIN .42 AC-FT 670

PEAK DISCHARGE (BASE, 50 CFS).--No peak above base.

11073000 SAN ANTONIO CREEK NEAR CLAREMONT, CALIF.--Continued

COMBINED DISCHARGE, IN CUBIC FEET PER SECOND, OF SAN ANTONIO CREEK AND SOUTHERN CALIFORNIA EDISON CO.'S SIERRA CONDUIT NEAR CLAREMONT, CALIF., WATER YEAR OCTOBER 1971 TO SEPTEMBER 1972

DAY	OCT	NOV	DEC	JAN	FEB	MAR	APR	MAY	JUN	JUL	AUG	SEP
1	5.6	5.3	5.3	16	12	10	8.7	7.2	5.2	5.0	4.7	5.1
2	5.6	5.3	5.3	16	12	10	8.4	7.2	5.0	5.0	5.0	5.0
3	5.6	5.3	5.3	16	12	9.8	8.4	7.2	4.6	5.0	5.2	5.0
4	5.6	5.3	5.3	16	12	10	8.4	7.2	4.6	4.7	5.5	5.1
5	5.6	5.3	5.3	16	12	9.8	8.4	7.2	4.8	4.6	5.2	5.1
6	5.6	5.3	5.3	16	13	9.8	8.4	7.2	4.6	4.6	5.2	5.1
7	5.6	5.3	5.3	16	13	9.8	8.4	7.2	5.1	4.6	5.2	5.2
8	5.6	5.6	5.3	16	13	9.8	8.4	7.2	5.3	4.6	5.2	5.2
9	5.6	5.6	5.3	16	13	9.4	8.4	6.9	5.3	4.6	5.2	5.2
10	5.5	5.6	5.3	16	13	9.4	8.4	6.9	5.4	4.6	5.2	5.2
11	5.5	5.6	5.3	16	12	9.2	7.9	6.9	5.4	4.6	5.2	3.8
12	5.5	5.7	5.3	16	12	9.2	7.9	6.9	5.3	4.6	4.8	5.2
13	5.0	5.7	5.4	16	12	9.2	7.9	6.9	5.6	4.6	5.3	5.2
14	5.6	5.7	5.3	16	12	9.2	7.9	6.9	5.6	4.4	5.3	5.2
15	5.6	5.7	5.3	14	12	8.8	7.9	6.9	5.6	4.4	5.3	5.2
16	5.6	5.3	5.3	14	12	8.8	7.9	6.9	5.6	4.4	5.3	5.3
17	5.5	5.3	5.3	14	12	8.8	7.9	6.9	5.6	4.4	5.1	5.0
18	5.4	5.3	5.3	14	11	9.1	7.9	6.9	5.6	4.4	5.1	4.2
19	5.3	5.3	5.3	14	11	9.1	7.9	6.9	5.6	4.4	5.1	4.3
20	5.3	5.3	5.4	15	11	9.1	7.6	6.9	5.6	4.6	5.2	4.9
21	5.3	5.3	5.4	15	11	8.8	7.6	6.9	5.6	4.7	5.2	5.0
22	5.3	5.3	6.9	14	11	8.7	7.6	6.7	5.6	4.7	5.1	4.9
23	5.6	5.3	6.1	14	11	8.7	7.6	6.4	5.6	4.5	5.1	5.0
24	5.7	5.3	21	13	11	8.7	7.6	6.1	5.6	4.3	5.1	4.9
25	5.7	5.3	22	13	10	8.7	7.6	6.0	5.3	4.0	5.1	5.0
26	5.7	5.3	20	13	10	8.7	7.3	6.0	5.3	4.3	4.4	5.0
27	5.7	5.3	14	13	10	8.7	7.3	6.0	5.3	4.4	5.4	5.0
28	5.6	5.3	15	12	10	8.7	7.3	5.8	5.0	4.4	5.1	5.0
29	5.6	5.3	14	12	10	8.7	7.3	5.4	5.0	4.4	5.1	5.0
30	5.3	5.3	16	12	------	8.7	7.2	5.2	5.0	4.4	5.1	5.0
31	5.3	------	16	12	------	8.7	------	5.2	------	4.0	5.1	------
TOTAL	171.0	161.8	262.6	452	336	284.1	237.4	206.1	158.7	140.2	159.1	149.3
MEAN	5.52	5.39	8.47	14.6	11.6	9.16	7.91	6.65	5.29	4.52	5.13	4.98
MAX	5.7	5.7	22	16	13	10	8.7	7.2	5.6	5.0	5.5	5.3
MIN	5.0	5.3	5.3	12	10	8.7	7.2	5.2	4.6	4.0	4.4	3.8
AC-FT	339	321	521	897	666	564	471	409	315	278	316	296

CAL YR 1971 TOTAL 3,408.2 MEAN 9.34 MAX 22 MIN 4.0 AC-FT 6,760
WTR YR 1972 TOTAL 2,718.3 MEAN 7.43 MAX 22 MIN 3.8 AC-FT 5,390

PEAK DISCHARGE (BASE, 50 CFS).--No peak above base.

11073200 SAN ANTONIO CREEK BELOW SAN ANTONIO DAM, CALIF.

LOCATION.--Lat 34°09'26", long 117°40'50", in NE¼NE¼SE¼ sec.23, T.1 N., R.8 W., Los Angeles-San Bernardino County line, on left wall of outlet channel at toe of San Antonio Dam, and 4.7 miles northeast of Claremont.

DRAINAGE AREA.--26.9 sq mi.

PERIOD OF RECORD.--October 1962 to current year.

GAGE.--Water-stage recorder. Datum of gage is 2,093.94 ft above mean sea level (Corps of Engineers bench mark).

AVERAGE DISCHARGE.--10 years, 11.1 cfs (8,040 acre-ft per year); median of yearly mean discharges, 0.2 cfs (140 acre-ft per year).

EXTREMES.--Current year: Maximum daily discharge, 39 cfs Jan. 3; no flow most of year.
Period of record: Maximum discharge, 8,420 cfs Jan. 25, 1969 (gage height, 11.22 ft), from rating curve extended above 400 cfs on basis of gate openings at dam; no flow most of each year.

REMARKS.--Records fair. Flow regulated by San Antonio flood-control reservoir (capacity, 7,620 acre-ft). Water diverted out of basin for power, domestic use, and irrigation. See schematic diagram of Santa Ana River basin.

DISCHARGE, IN CUBIC FEET PER SECOND, WATER YEAR OCTOBER 1971 TO SEPTEMBER 1972

DAY	OCT	NOV	DEC	JAN	FEB	MAR	APR	MAY	JUN	JUL	AUG	SEP
1				0	.01							0
2				0	0							0
3				39	0							0
4				29	0							0
5				.29	0							0
6				.19	0							0
7				.39	0							0
8				.80	0							0
9				.01	0							0
10				0	0							0
11				0	0							0
12				0	0							0
13				0	0							.01
14				0	0							.05
15				0	0							.09
16				0	0							.17
17				0	0							.12
18				0	0							.17
19				0	0							.16
20				0	0							.10
21				0	0							.11
22				0	0							.09
23				0	0							.09
24				0	0							.10
25				0	0							.10
26				0	0							.09
27				0	0							.08
28				0	0							.09
29				0	0							.07
30				0	------							.13
31		------		0	------		------		------			------
TOTAL	0	0	0	69.68	.01	0	0	0	0	0	0	1.82
MEAN	0	0	0	2.25	.0003	0	0	0	0	0	0	.061
MAX	0	0	0	39	.01	0	0	0	0	0	0	.17
MIN	0	0	0	0	0	0	0	0	0	0	0	0
AC-FT	0	0	0	138	.02	0	0	0	0	0	0	3.6

CAL YR 1971 TOTAL 23.86 MEAN .065 MAX 6.7 MIN 0 AC-FT 47
WTR YR 1972 TOTAL 71.51 MEAN .20 MAX 39 MIN 0 AC-FT 142

NOTE.--No gage-height record Jan. 3, 4.

11073360 CHINO CREEK AT SCHAEFER AVENUE, NEAR CHINO, CALIF.

LOCATION.--Lat 34°00'14", long 117°43'34", in Santa Ana del Chino Grant, San Bernardino County, on right bank 300 ft downstream from Schaefer Avenue, 0.8 mile downstream from San Antonio Creek, and 1.5 miles southwest of Chino.

DRAINAGE AREA.--48.9 sq mi.

PERIOD OF RECORD.--October 1969 to current year.

GAGE.--Water-stage recorder. Altitude of gage is 685 ft (from topographic map).

EXTREMES.--Current year: Maximum discharge, 1,160 cfs Dec. 24 (gage height, 5.61 ft); minimum daily, 0.26 cfs Feb. 4, Mar. 5, 6, 12, 13, 20-23.

Period of record: Maximum discharge, 1,520 cfs Mar. 1 (gage height, 5.84 ft), from rating curve extended above 520 cfs on basis of computation of flow in concrete-lined channel at 1,600 cfs; minimum daily, 0.07 cfs Jan. 13, 1970.

Flood of Jan. 25, 1969, 9,200 cfs (gage height, 9.23 ft, present datum), by contracted-opening measurement at site 6.1 miles downstream.

REMARKS.--Records good. Flow partly regulated by San Antonio flood-control reservoir (capacity, 7,620 acre-ft). Natural streamflow affected by extensive ground-water withdrawals, diversions for power, domestic use, irrigation, and return flow from irrigated areas. See schematic diagram of Santa Ana River basin.

DISCHARGE, IN CUBIC FEET PER SECOND, WATER YEAR OCTOBER 1971 TO SEPTEMBER 1972

DAY	OCT	NOV	DEC	JAN	FEB	MAR	APR	MAY	JUN	JUL	AUG	SEP
1	.50	.50	.42	2.6	.32	.32	.32	.50	.50	.50	.50	.62
2	.50	.50	.44	1.7	.32	.32	.32	.50	.50	.50	.50	.62
3	.50	.42	.62	1.2	.28	.32	.32	.50	.50	.50	.50	.62
4	.50	.40	2.6	.96	.26	.29	.32	.50	.50	.50	.50	.62
5	.50	.40	1.4	.77	.29	.26	.32	.50	.50	.50	.50	.62
6	.46	.40	.82	.65	.39	.26	.32	.50	.50	.50	.50	.62
7	.50	.40	.68	.62	.40	.32	.32	.50	.50	.53	.50	.62
8	.63	.45	.53	.50	.40	.32	.32	.50	.50	.62	.52	.62
9	.73	.50	.47	.50	.40	.32	.32	.50	.50	.58	.62	.62
10	.71	.50	.41	.42	.40	.32	.32	.50	.50	.50	.56	.62
11	.65	.50	1.8	.40	.40	.29	.32	.50	.50	.50	.50	.62
12	.65	26	1.3	.40	.37	.26	.32	.50	.50	.50	.56	.62
13	.55	2.7	14	.40	.32	.26	.32	.50	.50	.50	.64	.62
14	.59	1.5	2.5	.40	.32	.31	.32	.50	.50	.50	.76	.62
15	.66	.89	1.5	.40	.32	.32	.32	.50	.50	.50	.76	.62
16	1.1	.63	.94	.35	.32	.32	.32	.50	.50	.50	.76	.62
17	.84	.50	.76	.32	.32	.32	.32	.50	.50	.50	.76	.62
18	.58	.42	.68	.32	.32	.32	.33	.50	.50	.50	.76	.62
19	.50	.40	.62	.32	.32	.27	.44	.50	.50	.50	.76	.62
20	.42	.40	.62	.32	.32	.26	.50	.50	.50	.50	.68	.62
21	.40	.40	.60	.32	.32	.26	.50	.50	.50	.50	.62	.62
22	.40	.40	145	.32	.32	.26	.50	.50	.50	.50	.62	.62
23	.33	.40	10	.32	.32	.26	.50	.50	.50	.50	.62	.62
24	21	.44	346	.32	.32	.29	.50	.50	.50	.50	.62	.62
25	2.1	.50	109	.32	.32	.30	.50	.50	.50	.50	.62	.62
26	1.2	.50	28	.32	.32	.32	.50	.50	.50	.50	.62	.62
27	.85	.47	214	.32	.32	.32	.50	.50	.50	.50	.62	.62
28	.91	.40	70	.32	.32	.32	.50	.50	.50	.50	.62	.99
29	.76	.40	26	.32	.32	.32	.50	.50	.50	.50	.62	1.1
30	.64	.44	7.4	.32	------	.32	.50	.50	.50	.50	.62	1.1
31	.51	------	4.3	.32	------	.32	------	.50	------	.50	.62	------
TOTAL	41.17	42.76	993.41	17.07	9.67	9.27	11.71	15.50	15.00	15.73	18.96	19.93
MEAN	1.33	1.43	32.0	.55	.33	.30	.39	.50	.50	.51	.61	.66
MAX	21	26	346	2.6	.40	.32	.50	.50	.50	.62	.76	1.1
MIN	.33	.40	.41	.32	.26	.26	.32	.50	.50	.50	.50	.62
AC-FT	82	85	1,970	34	19	18	23	31	30	31	38	40

CAL YR 1971 TOTAL 1,467.05 MEAN 4.02 MAX 346 MIN .24 AC-FT 2,910
WTR YR 1972 TOTAL 1,210.18 MEAN 3.31 MAX 346 MIN .26 AC-FT 2,400

PEAK DISCHARGE (BASE, 600 CFS)

DATE	TIME	G.H.	DISCHARGE	DATE	TIME	G.H.	DISCHARGE
12-22	0930	5.33	796	12-27	1115	5.18	640
12-24	1530	5.61	1,160				

11073470 CUCAMONGA CREEK NEAR UPLAND, CALIF.

LOCATION.--Lat 34°10'46", long 117°37'41", in NE¼NE¼NE¼ sec.17, T.1 N., R.7 W., San Bernardino County, on left bank 0.1 mile upstream from unnamed tributary, and 5.7 miles north of Upland.

DRAINAGE AREA.--9.68 sq mi.

PERIOD OF RECORD.--October 1927 to current year. Monthly discharge only for October to December 1928, published in WSP 1315-B.

GAGE.--Water-stage recorder. Altitude of gage is 2,600 ft (from topographic map). See WSP 1735 for history of changes prior to Dec. 13, 1938. Dec. 14, 1938, to Mar. 30, 1971, at site 0.6 mile downstream at different datums.

AVERAGE DISCHARGE.--45 years, 7.82 cfs (5,670 acre-ft per year); median of yearly mean discharges, 4.9 cfs (3,600 acre-ft per year).

EXTREMES.--Current year: Maximum gage height, 3.20 ft Dec. 24 (discharge not determined due to backwater caused by logs on control); minimum daily discharge, 0.87 cfs Nov. 10.

Period of record: Maximum discharge, 14,100 cfs Jan. 25, 1969 (gage height, 14.44 ft, site and datum then in use), from rating curve extended above 450 cfs on basis of slope-area measurements at gage heights 6.22 and 12.44 ft; minimum daily, 0.30 cfs Oct. 5, 6, 1962.

REMARKS.--Records fair. No regulation or diversion above station. See schematic diagram of Santa Ana River basin.

DISCHARGE, IN CUBIC FEET PER SECOND, WATER YEAR OCTOBER 1971 TO SEPTEMBER 1972

DAY	OCT	NOV	DEC	JAN	FEB	MAR	APR	MAY	JUN	JUL	AUG	SEP
1	2.1	1.3	3.0	11	3.5	3.2	2.4	2.3	2.0	1.8	1.5	1.4
2	2.1	1.3	3.0	11	3.5	3.1	2.4	2.3	2.0	1.8	1.5	1.4
3	2.1	1.2	2.9	10	3.5	3.1	2.4	2.3	2.0	1.8	1.6	1.5
4	2.1	1.1	2.8	9.9	3.5	3.0	2.4	2.4	1.9	1.7	1.5	1.6
5	2.1	1.1	2.7	9.6	3.5	2.9	2.4	2.5	2.3	1.7	1.5	1.5
6	2.1	.99	2.7	9.2	3.5	2.9	2.4	2.5	2.3	1.8	1.5	1.6
7	2.1	1.0	2.7	8.9	3.5	2.9	2.4	2.5	2.1	1.8	1.5	1.6
8	2.1	.96	2.5	8.6	3.5	2.7	2.6	2.5	2.1	1.8	1.5	1.7
9	2.1	.95	2.3	8.7	3.5	2.7	2.6	2.4	2.1	1.8	1.4	1.7
10	2.1	.87	2.2	8.4	3.5	2.7	2.6	2.4	2.1	1.8	1.4	1.7
11	2.1	.91	2.1	8.2	3.5	2.7	2.6	2.3	2.0	1.8	1.4	1.7
12	2.1	3.6	2.0	8.0	3.5	2.7	2.6	2.2	1.9	1.8	1.6	1.7
13	2.2	2.5	2.0	7.3	3.5	2.7	2.7	2.1	1.9	1.7	1.7	1.6
14	2.3	2.5	2.0	6.5	3.5	2.7	2.8	2.0	1.9	1.7	1.6	1.5
15	2.3	2.4	2.0	5.4	3.4	2.6	2.7	2.0	1.9	1.8	1.6	1.5
16	2.4	2.4	2.0	5.3	3.4	2.6	2.6	2.1	1.9	1.8	1.6	1.5
17	2.3	2.2	1.9	5.2	3.3	2.4	2.6	2.2	1.9	1.8	1.5	1.5
18	2.3	2.2	2.0	4.8	3.3	2.5	3.3	2.3	1.9	1.9	1.6	1.6
19	2.2	3.0	2.2	4.7	3.0	2.5	3.3	2.5	1.9	1.9	1.6	1.6
20	2.0	3.2	2.2	4.5	3.1	2.4	3.0	2.5	1.9	2.0	1.5	1.6
21	2.0	3.3	2.2	4.3	3.5	2.4	2.8	2.4	2.0	1.9	1.5	1.5
22	2.5	3.6	9.6	4.1	3.5	2.4	2.7	2.4	2.1	1.8	1.4	1.5
23	2.7	3.5	4.2	3.8	3.6	2.4	2.6	2.3	2.1	1.8	1.4	1.7
24	3.7	3.5	35	3.7	3.5	2.4	2.6	2.3	2.1	1.7	1.4	1.8
25	2.6	3.1	28	3.5	3.5	2.4	2.5	2.4	2.0	1.6	1.5	1.9
26	1.7	3.4	23	3.5	3.5	2.4	2.4	2.3	2.0	1.6	1.5	1.8
27	1.7	3.3	20	3.5	3.4	2.6	2.4	2.2	1.9	1.5	1.7	1.8
28	2.4	3.4	18	3.5	3.1	2.6	2.4	2.1	1.8	1.5	1.7	1.8
29	1.6	3.1	16	3.5	3.2	2.6	2.4	2.0	1.7	1.5	1.5	1.8
30	1.4	3.1	13	3.5	------	2.5	2.4	2.0	1.8	1.5	1.5	1.6
31	1.4	------	12	3.5	------	2.4	------	2.0	------	1.5	1.4	------
TOTAL	66.9	68.98	228.2	195.6	99.3	82.1	78.0	70.7	59.5	53.9	47.1	48.7
MEAN	2.16	2.30	7.36	6.31	3.42	2.65	2.60	2.28	1.98	1.74	1.52	1.62
MAX	3.7	3.6	35	11	3.6	3.2	3.3	2.5	2.3	2.0	1.7	1.9
MIN	1.4	.87	1.9	3.5	3.0	2.4	2.4	2.0	1.7	1.5	1.4	1.4
AC-FT	133	137	453	388	197	163	155	140	118	107	93	97

CAL YR 1971 TOTAL 1,309.28 MEAN 3.59 MAX 35 MIN .87 AC-FT 2,600
WTR YR 1972 TOTAL 1,098.98 MEAN 3.00 MAX 35 MIN .87 AC-FT 2,180

PEAK DISCHARGE (BASE, 80 CFS).--Dec. 24 (1345) discharge unknown (3.20 ft).

11073495 CUCAMONGA CREEK NEAR MIRA LOMA, CALIF.

LOCATION.--Lat 33°58'58", long 117°35'55", in SW¼SW¼NE¼ sec.22, T.2 S., R.7 W., San Bernardino County, on left levee 200 ft upstream from Merrill Avenue, and 4.6 miles west of Mira Loma.

DRAINAGE AREA.--75.8 sq mi.

PERIOD OF RECORD.--January 1968 to current year.

GAGE.--Water-stage recorder. Datum of gage is 655.3 ft above mean sea level.

EXTREMES.--Current year: Maximum discharge, 751 cfs Nov. 25 (gage height, 2.29 ft); no flow most of year. Period of record: Maximum discharge, 9,100 cfs Jan. 25, 1969 (gage height, 7.08 ft, from floodmark), on basis of slope-area measurement of maximum flow; no flow most of each year.

REMARKS.--Records fair. Flood flows not materially affected by percolation basins in headwater areas. Extensive ground-water withdrawals for municipal supply and irrigation. See schematic diagram of Santa Ana River basin.

DISCHARGE, IN CUBIC FEET PER SECOND, WATER YEAR OCTOBER 1971 TO SEPTEMBER 1972

DAY	OCT	NOV	DEC	JAN	FEB	MAR	APR	MAY	JUN	JUL	AUG	SEP
1	0	0	0	.14								
2	0	.07	0	.28								
3	0	.24	0	.04								
4	0	.02	0	0								
5	0	0	13	0								
6	0	0	7.0	0								
7	0	.15	10	0								
8	0	1.1	0	0								
9	0	2.1	0	0								
10	0	1.2	0	0								
11	0	4.5	0	0								
12	0	9.4	0	0								
13	0	6.9	0	0								
14	0	5.4	0	0								
15	0	6.4	0	0								
16	0	6.9	0	0								
17	0	3.9	0	0								
18	0	0	0	0								
19	0	0	0	0								
20	0	0	0	0								
21	0	0	0	0								
22	0	3.3	12	0								
23	0	0	.20	0								
24	0	9.1	75	0								
25	0	22	52	0								
26	0	14	3.7	0								
27	0	13	67	0								
28	5.8	11	5.2	0								
29	0	6.0	0	0								
30	0	0	0	0	------							
31	0	------	.08	0	------		------		------			------
TOTAL	5.8	126.68	245.18	.46	0	0	0	0	0	0	0	0
MEAN	.19	4.22	7.91	.015	0	0	0	0	0	0	0	0
MAX	5.8	22	75	.28	0	0	0	0	0	0	0	0
MIN	0	0	0	0	0	0	0	0	0	0	0	0
AC-FT	12	251	486	.9	0	0	0	0	0	0	0	0

CAL YR 1971 TOTAL 462.40 MEAN 1.27 MAX 75 MIN 0 AC-FT 917
WTR YR 1972 TOTAL 378.12 MEAN 1.03 MAX 75 MIN 0 AC-FT 750

PEAK DISCHARGE (BASE, 300 CFS, REVISED)

DATE	TIME	G.H.	DISCHARGE	DATE	TIME	G.H.	DISCHARGE
11-25	1900	2.29	751	12-24	1700	1.90	388
12-5	1100	1.87	363	12-27	1600	2.10	550

11074000 SANTA ANA RIVER BELOW PRADO DAM, CALIF.

LOCATION.--Lat 33°53'00", long 117°38'40", in La Sierra Grant, Riverside County, on left bank of outlet channel, 2,500 ft downstream from axis of Prado Dam, and 4.5 miles west of Corona.

DRAINAGE AREA.--1,490 sq mi, excludes 768 sq mi above Lake Elsinore.

PERIOD OF RECORD.--May 1930 to November 1939 (irrigation seasons only), March 1940 to current year. Published as "at Santa Fe Railroad Bridge, near Prado" May 1930 to November 1931, as "at Atchison, Topeka, and Santa Fe Railroad bridge, near Prado" May 1932 to November 1939, and as "below Prado Dam, near Prado" March 1940 to September 1950.

GAGE.--Water-stage recorder and concrete control since August 1944. Datum of gage is approximately 449 ft above mean sea level (Corps of Engineers Survey). Prior to Mar. 18, 1940, at about same site at various datums.

EXTREMES.--Current year: Maximum discharge, 688 cfs Dec. 27 (gage height, 4.01 ft); minimum daily, 3.6 cfs Oct. 21.
Period of record: Maximum discharge, 5,800 cfs Jan. 26, 1969 (gage height, 5.75 ft); minimum daily, 3.6 cfs Oct. 21, 1971.
Flood of Mar. 2, 1938, 100,000 cfs, by slope-area measurement at site 2.5 miles downstream.

REMARKS.--Records good. Flow regulated since 1941 by Prado Reservoir (capacity, 201,200 acre-ft) and Big Bear Lake (see sta 11049000). Natural streamflow affected by extensive ground-water withdrawals, diversion for irrigation, and return flow from irrigated areas. See schematic diagram of Santa Ana River basin. Records of chemical analyses for the current year are published in Part 2 of this report.

COOPERATION.--Forty-four discharge measurements furnished by Orange County Flood Control District.

DISCHARGE, IN CUBIC FEET PER SECOND, WATER YEAR OCTOBER 1971 TO SEPTEMBER 1972

DAY	OCT	NOV	DEC	JAN	FEB	MAR	APR	MAY	JUN	JUL	AUG	SEP
1	39	45	52	496	85	90	72	58	48	41	30	43
2	31	47	53	484	84	84	71	61	43	39	31	39
3	28	49	57	466	83	84	71	60	41	43	30	44
4	27	54	67	405	86	84	72	60	40	45	29	47
5	28	54	67	298	86	82	70	66	61	35	25	41
6	27	52	60	227	89	84	66	71	88	33	23	39
7	24	47	67	224	90	82	68	68	76	33	27	44
8	27	49	56	217	91	84	69	64	71	37	26	43
9	28	57	54	212	91	81	68	66	71	33	25	42
10	27	52	56	205	90	78	72	69	58	31	23	43
11	28	47	55	197	90	79	71	63	54	31	30	39
12	30	57	51	183	88	78	70	53	62	35	33	42
13	35	71	57	135	87	80	68	44	66	39	52	40
14	35	68	63	100	90	77	64	42	52	42	52	37
15	33	66	58	91	90	74	63	44	48	44	52	39
16	37	57	53	95	87	76	61	49	46	47	46	37
17	76	54	54	91	87	78	66	43	48	43	37	42
18	29	54	56	93	92	81	63	48	46	40	35	42
19	4.4	57	56	95	89	76	77	56	42	38	33	45
20	4.0	49	57	95	86	77	75	56	39	36	35	43
21	3.6	49	60	95	86	78	64	57	57	34	36	26
22	43	49	101	95	90	78	59	59	62	34	35	23
23	60	57	155	94	88	78	55	62	62	35	29	18
24	52	57	157	93	85	77	68	62	59	39	27	18
25	47	59	191	96	87	76	66	60	53	35	43	22
26	101	62	197	92	86	75	58	53	46	37	42	27
27	52	64	304	90	86	72	57	55	48	39	45	35
28	45	64	469	88	87	72	60	50	45	31	42	50
29	45	62	566	84	88	66	58	49	33	25	41	45
30	45	62	530	80	------	68	52	56	33	31	38	49
31	47	------	508	81	------	72	------	60	------	30	34	------
TOTAL	1,138.0	1,671	4,387	5,397	2,544	2,421	1,974	1,764	1,598	1,135	1,086	1,144
MEAN	36.7	55.7	142	174	87.7	78.1	65.8	56.9	53.3	36.6	35.0	38.1
MAX	101	71	566	496	92	90	77	71	88	47	52	50
MIN	3.6	45	51	80	83	66	52	42	33	25	23	18
AC-FT	2,260	3,310	8,700	10,700	5,050	4,800	3,920	3,500	3,170	2,250	2,150	2,270

CAL YR 1971 TOTAL 23,335.0 MEAN 63.9 MAX 566 MIN 3.6 AC-FT 46,280
WTR YR 1972 TOTAL 26,259.0 MEAN 71.7 MAX 566 MIN 3.6 AC-FT 52,080

11075720 CARBON CREEK BELOW CARBON CANYON DAM, CALIF.

LOCATION.--Lat 33°54'40", long 117°50'29", in SW¼NE¼ sec.17, T.3 S., R.9 W., Orange County, on right wall of outlet channel 250 ft downstream from toe of Carbon Canyon Dam, and 2.4 miles northwest of Yorba Linda.

DRAINAGE AREA.--19.5 sq mi.

PERIOD OF RECORD.--October 1961 to current year.

GAGE.--Water-stage recorder. Datum of gage is 396.29 ft above mean sea level (Corps of Engineers bench mark). Prior to Dec. 3, 1971, at datum 2.00 ft higher.

AVERAGE DISCHARGE.--11 years, 0.59 cfs (428 acre-ft per year); median of yearly mean discharges, 0.09 cfs (62 acre-ft per year).

EXTREMES.--Current year: Maximum discharge, 0.92 cfs Dec. 24 (gage height, 2.18 ft); no flow most of year. Period of record: Maximum discharge, 446 cfs Feb. 25, 1969 (gage height, 4.64 ft, present datum), from rating curve extended above 110 cfs on basis of computation of flow in concrete-lined channel at gage height 6.18 ft; no flow most of each year.

REMARKS.--Records good. Flow regulated by Carbon Canyon flood-control reservoir (capacity, 6,610 acre-ft, revised). No diversion above station. See schematic diagram of Santa Ana River basin.

DISCHARGE, IN CUBIC FEET PER SECOND, WATER YEAR OCTOBER 1971 TO SEPTEMBER 1972

DAY	OCT	NOV	DEC	JAN	FEB	MAR	APR	MAY	JUN	JUL	AUG	SEP
1			0									
2			0									
3			0									
4			0									
5			0									
6			0									
7			0									
8			0									
9			0									
10			0									
11			0									
12			0									
13			0									
14			0									
15			0									
16			0									
17			0									
18			0									
19			0									
20			0									
21			0									
22			.11									
23			0									
24			.29									
25			.46									
26			.33									
27			.14									
28			0									
29			0									
30			0		------							
31		------	0		------		------		------			------
TOTAL	0	0	1.33	0	0	0	0	0	0	0	0	0
MEAN	0	0	.043	0	0	0	0	0	0	0	0	0
MAX	0	0	.46	0	0	0	0	0	0	0	0	0
MIN	0	0	0	0	0	0	0	0	0	0	0	0
AC-FT	0	0	2.6	0	0	0	0	0	0	0	0	0

CAL YR 1971 TOTAL 1.33 MEAN .0040 MAX .46 MIN 0 AC-FT 2.6
WTR YR 1972 TOTAL 1.33 MEAN .0040 MAX .46 MIN 0 AC-FT 2.6

11075800 SANTIAGO CREEK AT MODJESKA, CALIF.

LOCATION.--Lat 33°42'32", long 117°38'05", in SE¼SE¼NW¼ sec.29, T.5 S., R.7 W., Orange County, on right bank at Santiago Canyon road bridge, 0.3 mile west of Modjeska, and 0.4 mile downstream from Harding Creek.

DRAINAGE AREA.--12.5 sq mi.

PERIOD OF RECORD.--October 1961 to current year.

GAGE.--Water-stage recorder. Datum of gage is 1,254.35 ft (revised) above mean sea level. Prior to Sept. 10, 1969, at datum 4.42 ft (revised) higher.

AVERAGE DISCHARGE.--11 years, 7.32 cfs (5,300 acre-ft per year); median of yearly mean discharges, 1.4 cfs (1,000 acre-ft per year).

EXTREMES.--Current year: Maximum discharge, 241 cfs Dec. 25 (gage height, 4.11 ft); no flow Oct. 5-15, Aug. 7 to Sept. 30.
Period of record: Maximum discharge, 6,520 cfs Feb. 25, 1969 (gage height, 10.60 ft, present datum), from rating curve extended above 840 cfs on basis of slope-area measurement of maximum flow; no flow for several months in each year.

REMARKS.--Records fair. Slight regulation by Modjeska Reservoir on Harding Creek. No diversion above station. See schematic diagram of Santa Ana River basin.

COOPERATION.--Three discharge measurements furnished by Orange County Flood Control District.

DISCHARGE, IN CUBIC FEET PER SECOND, WATER YEAR OCTOBER 1971 TO SEPTEMBER 1972

DAY	OCT	NOV	DEC	JAN	FEB	MAR	APR	MAY	JUN	JUL	AUG	SEP
1	.01	.01	.04	5.9	.77	.60	.20	.10	.09	.08	.01	
2	.01	.01	.04	4.9	.68	.55	.18	.10	.09	.07	.01	
3	.01	.01	.06	4.2	.72	.55	.19	.10	.09	.07	.01	
4	.01	.01	.10	3.7	.71	.52	.17	.10	.09	.07	.01	
5	0	.01	.08	3.1	.74	.55	.18	.10	.10	.06	.01	
6	0	.01	.07	2.9	.86	.50	.18	.10	.10	.06	.01	
7	0	.01	.07	2.6	.79	.50	.16	.10	.10	.06	0	
8	0	.01	.07	2.5	.79	.47	.16	.10	.13	.06	0	
9	0	.01	.07	2.2	.72	.50	.12	.10	.13	.06	0	
10	0	.01	.07	2.2	.72	.50	.12	.10	.13	.05	0	
11	0	.01	.07	2.2	.65	.46	.10	.10	.12	.05	0	
12	0	.06	.07	1.9	.60	.50	.10	.10	.13	.05	0	
13	0	.04	.07	2.0	.55	.47	.10	.10	.17	.04	0	
14	0	.04	.07	1.9	.55	.50	.09	.10	.17	.04	0	
15	0	.04	.07	1.9	.55	.46	.08	.10	.17	.04	0	
16	.06	.04	.07	1.8	.51	.50	.08	.10	.15	.04	0	
17	.03	.04	.07	1.8	.55	.45	.08	.10	.15	.04	0	
18	.03	.04	.07	1.6	.50	.45	.07	.10	.15	.04	0	
19	.02	.04	.07	1.6	.51	.41	.09	.08	.13	.04	0	
20	.02	.04	.07	1.5	.51	.41	.08	.08	.14	.04	0	
21	.02	.04	.07	1.5	.55	.37	.08	.07	.14	.04	0	
22	.01	.04	.20	1.5	.50	.37	.09	.08	.12	.04	0	
23	.01	.04	.16	1.4	.52	.37	.10	.09	.12	.04	0	
24	.01	.04	17	1.4	.50	.33	.11	.10	.12	.04	0	
25	.01	.04	76	1.3	.50	.33	.11	.12	.10	.04	0	
26	.01	.04	61	1.3	.48	.29	.10	.11	.10	.02	0	
27	0	.04	33	1.2	.56	.29	.10	.10	.10	.02	0	
28	.01	.04	47	1.1	.61	.26	.10	.09	.09	.01	0	
29	.01	.04	23	.86	.60	.26	.12	.10	.08	.01	0	
30	.01	.04	12	.85	------	.23	.10	.09	.08	.01	0	
31	.01	------	8.0	.80	------	.20	------	.09	------	.01	0	------
TOTAL	.31	.89	278.80	65.61	17.80	13.15	3.54	3.00	3.58	1.34	.06	0
MEAN	.010	.030	8.99	2.12	.61	.42	.12	.097	.12	.043	.002	0
MAX	.06	.06	76	5.9	.86	.60	.20	.12	.17	.08	.01	0
MIN	0	.01	.04	.80	.48	.20	.07	.07	.08	.01	0	0
AC-FT	.6	1.8	553	130	35	26	7.0	6.0	7.1	2.7	.1	0

CAL YR 1971 TOTAL 544.62 MEAN 1.49 MAX 76 MIN 0 AC-FT 1,080
WTR YR 1972 TOTAL 388.08 MEAN 1.06 MAX 76 MIN 0 AC-FT 770

PEAK DISCHARGE (BASE, 100 CFS).--Dec. 25 (2300) 241 cfs (4.11 ft).

11077500 SANTIAGO CREEK AT SANTA ANA, CALIF.

LOCATION.--Lat 33°46'13", long 117°53'02", in NW¼SW¼NW¼ sec.1, T.5 S., R.10 W., Orange County, on downstream side of Bristol Street bridge at Santa Ana, and 1,600 ft upstream from mouth.

DRAINAGE AREA.--95.1 sq mi.

PERIOD OF RECORD.--October 1928 to current year. Monthly discharge only October to December 1928, published in WSP 1315-B.

GAGE.--Water-stage recorder. Datum of gage is 102.34 ft above mean sea level (Orange County Flood Control District bench mark). Prior to Sept. 8, 1969, at site 0.1 mile upstream at different datums.

AVERAGE DISCHARGE.--44 years, 5.27 cfs (3,820 acre-ft per year); median of yearly mean discharges, 0.7 cfs (510 acre-ft per year).

EXTREMES.--Current year: Maximum discharge, 1,000 cfs Dec. 24 (gage height, 5.95 ft); no flow most of year. Period of record: Maximum discharge, 6,600 cfs Feb. 25, 1969 (gage height, 9.10 ft, site and datum then in use); maximum gage height, 9.85 ft Jan. 16, 1952; no flow most of each year.

REMARKS.--Records fair. Flow regulated by Santiago Reservoir (see sta 11076000), since January 1963 by Villa Park flood-control reservoir (capacity, 15,500 acre-ft), and affected by intervening gravel pits. Diversions above station by Irvine Co. and Serrano and Carpenter Irrigation Districts. In each winter season, some water originally diverted from Santa Ana River by Santa Ana Valley Irrigation Co.'s canal is occasionally wasted into Santiago Creek 3 miles above station. See schematic diagram of Santa Ana River basin.

DISCHARGE, IN CUBIC FEET PER SECOND, WATER YEAR OCTOBER 1971 TO SEPTEMBER 1972

DAY	OCT	NOV	DEC	JAN	FEB	MAR	APR	MAY	JUN	JUL	AUG	SEP
1			0		0				0		0	0
2			0		0				0		0	0
3			0		0				0		0	.34
4			0		0				0		0	0
5			0		.07				0		0	0
6			0		0				0		0	0
7			0		0				.10		0	0
8			0		0				0		0	0
9			0		0				1.2		0	0
10			0		0				0		0	0
11			0		0				0		0	0
12			0		0				0		6.3	0
13			0		0				0		1.2	0
14			0		0				0		0	0
15			0		0				0		0	0
16			0		0				0		0	0
17			0		0				0		0	0
18			0		0				0		0	0
19			0		0				0		0	0
20			0		0				0		0	0
21			0		0				0		0	0
22			35		0				0		0	0
23			.66		0				0		0	0
24			155		0				0		0	0
25			8.0		0				0		0	0
26			5.0		0				0		0	0
27			30		0				0		0	0
28			6.3		0				0		0	0
29			0		0				0		0	0
30			0		------				0		0	0
31		------	0		------		------		------		0	------
TOTAL	0	0	239.96	0	.07	0	0	0	1.30	0	7.5	.34
MEAN	0	0	7.74	0	.002	0	0	0	.043	0	.24	.011
MAX	0	0	155	0	.07	0	0	0	1.2	0	6.3	.34
MIN	0	0	0	0	0	0	0	0	0	0	0	0
AC-FT	0	0	476	0	.1	0	0	0	2.6	0	15	.7

CAL YR 1971 TOTAL 278.30 MEAN .76 MAX 155 MIN 0 AC-FT 552
WTR YR 1972 TOTAL 249.17 MEAN .68 MAX 155 MIN 0 AC-FT 494

11078000 SANTA ANA RIVER AT SANTA ANA, CALIF.

LOCATION.--Lat 33°44'56", long 117°54'30", in NW¼SW¼SE¼ sec.10, T.5 S., R.10 W., Orange County, on pier of Fifth Street Bridge in Santa Ana, 1.8 miles downstream from Santiago Creek.

DRAINAGE AREA.--1,689 sq mi, excludes 768 sq mi above Lake Elsinore.

PERIOD OF RECORD.--January 1923 to current year.

GAGE.--Water-stage recorder. Datum of gage is 71.20 ft above mean sea level (Orange County bench mark). Jan. 3, 1923, to Jan. 24, 1929, at same site at different datum. Jan. 25, 1929, to June 20, 1948, at site 450 ft upstream at different datum. June 21, 1948, to May 2, 1960, at same site at different datum. Feb. 28, 1961, to Oct. 1, 1961, at same site at datum 2.00 ft higher.

AVERAGE DISCHARGE.--17 years (1923-40), 23.4 cfs (16,940 acre-ft per year); median of yearly mean discharges, 3.1 cfs (2,200 acre-ft per year); 32 years (1940-72), 29.8 cfs (21,590 acre-ft per year); median of yearly mean discharges, 3.0 cfs (2,200 acre-ft per year).

EXTREMES.--Current year: Maximum discharge, 1,690 cfs Dec. 24 (gage height, 3.87 ft); no flow most of year. Period of record: Maximum discharge (excludes flow which bypassed gage from break in levee below Imperial Highway), 46,300 cfs Mar. 3, 1938 (gage height, 10.20 ft, site and datum then in use), on basis of slope-area measurement of maximum flow; no flow for several months in each year.

REMARKS.--Records fair. Natural flow affected by ground-water withdrawals, diversions, importation from Metropolitan Water District, municipal use, return flow from irrigation, Prado flood-control reservoir (capacity, 201,200 acre-ft) since 1940, three small flood-control reservoirs (combined capacity, 31,900 acre-ft), Big Bear Lake (see sta 11049000), and Santiago Reservoir (see sta 11076000). Discharge up to 100 cfs can be diverted from Carbon Creek to Coyote Creek, 1.5 miles upstream from mouth of Carbon Creek. See schematic diagram of Santa Ana River basin.

DISCHARGE, IN CUBIC FEET PER SECOND, WATER YEAR OCTOBER 1971 TO SEPTEMBER 1972

DAY	OCT	NOV	DEC	JAN	FEB	MAR	APR	MAY	JUN	JUL	AUG	SEP
1			0	210					0		0	
2			0	262					0		0	
3			0	199					0		0	
4			0	184					0		0	
5			0	168					0		0	
6			0	84					0		0	
7			0	28					.86		0	
8			0	20					0		0	
9			0	17					0		0	
10			0	16					0		0	
11			0	16					0		0	
12			0	17					0		5.0	
13			0	5.8					0		0	
14			0	4.8					0		0	
15			0	1.4					0		0	
16			0	6.7					0		0	
17			0	1.6					0		0	
18			0	.51					0		0	
19			0	.30					0		0	
20			0	.14					0		0	
21			0	0					0		0	
22			93	0					0		0	
23			1.9	0					0		0	
24			323	0					0		0	
25			56	0					0		0	
26			21	0					0		0	
27			175	0					0		0	
28			77	0					0		0	
29			32	0					0		0	
30			171	0	------				0		0	
31		------	96	0	------		------		------		0	------
TOTAL	0	0	1,045.9	1,242.25	0	0	0	0	.86	0	5.0	0
MEAN	0	0	33.7	40.1	0	0	0	0	.029	0	.16	0
MAX	0	0	323	262	0	0	0	0	.86	0	5.0	0
MIN	0	0	0	0	0	0	0	0	0	0	0	0
AC-FT	0	0	2,070	2,460	0	0	0	0	1.7	0	9.9	0

CAL YR 1971 TOTAL 1,587.60 MEAN 4.35 MAX 323 MIN 0 AC-FT 3,150
WTR YR 1972 TOTAL 2,294.01 MEAN 6.27 MAX 323 MIN 0 AC-FT 4,550

NOTE.--No stage-discharge relation June 7.

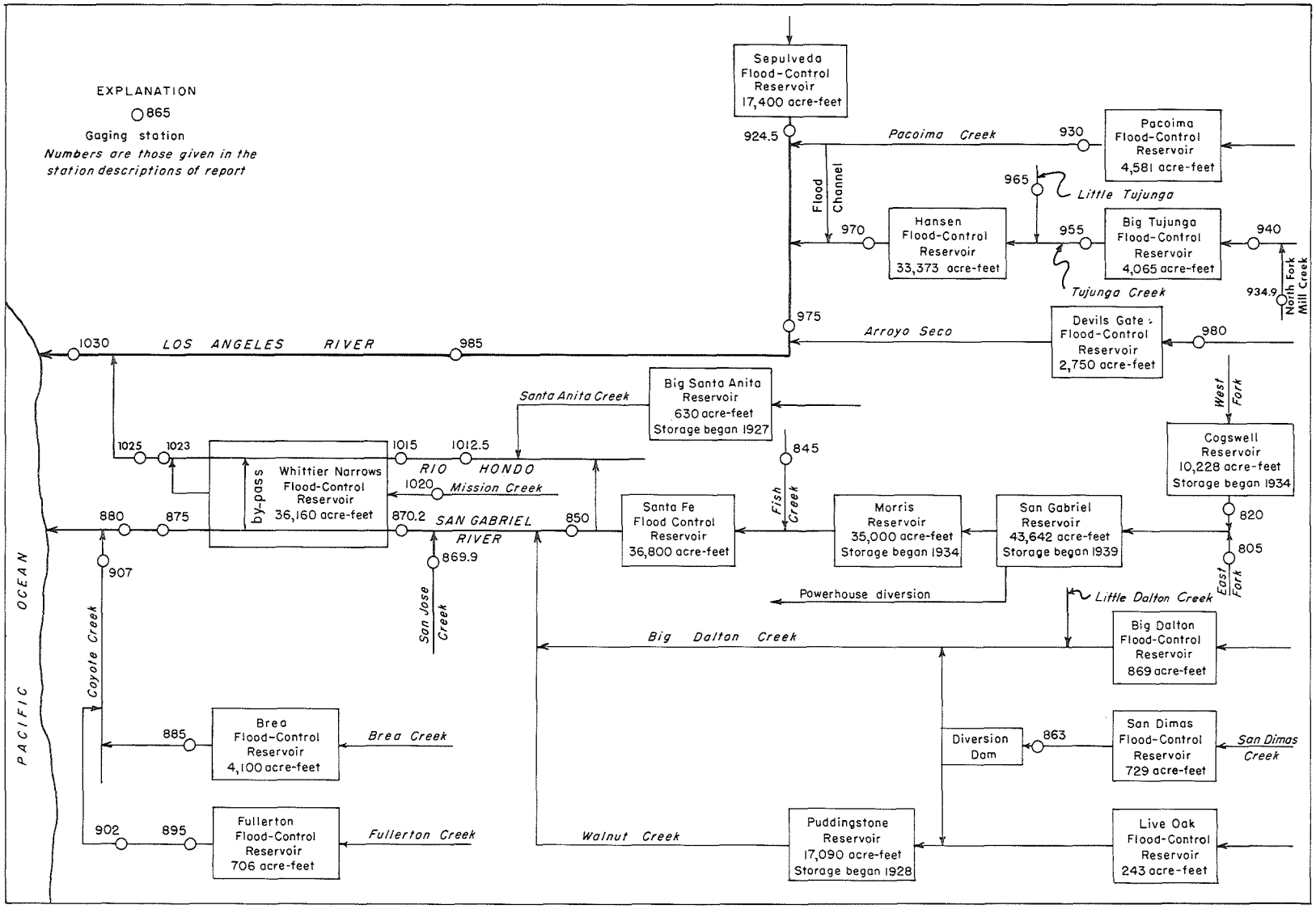

Figure 4.--Schematic diagram showing diversions and storage in San Gabriel and Los Angeles River basins.

11080500 EAST FORK SAN GABRIEL RIVER NEAR CAMP BONITA, CALIF.

LOCATION.--Lat 34°14'09", long 117°48'18", in NE¼NE¼ sec.27, T.2 N., R.9 W., Los Angeles County, on right bank 1,600 ft upstream from mouth of Graveyard Canyon, 2.5 miles upstream from confluence with West Fork, and 2.5 miles west of Camp Bonita.

DRAINAGE AREA.--84.6 sq mi.

PERIOD OF RECORD.--December 1932 to current year. Prior to 1940, published as San Gabriel River near Camp Bonita.

GAGE.--Water-stage recorder. Datum of gage is 1,567.04 ft above mean sea level (levels by Los Angeles County Flood Control District). Prior to Dec. 10, 1938, at site 0.6 mile downstream at different datum.

AVERAGE DISCHARGE.--39 years (1933-72), 70.0 cfs (50,720 acre-ft per year); median of yearly mean discharges, 42 cfs (30,400 acre-ft per year).

EXTREMES.--Current year: Maximum discharge, 759 cfs Dec. 24 (gage height, 9.85 ft); minimum daily, 8.0 cfs Oct. 10-14.
Period of record: Maximum discharge, 46,000 cfs Mar. 2, 1938, from rating curve extended above 21,300 cfs (computed by Geological Survey); minimum, 1.5 cfs Oct. 1, 1934.

REMARKS.--No regulation or diversion above station. See schematic diagram of San Gabriel and Los Angeles River basins.

COOPERATION.--Records furnished by Los Angeles County Flood Control District and reviewed by Geological Survey.

DISCHARGE, IN CUBIC FEET PER SECOND, WATER YEAR OCTOBER 1971 TO SEPTEMBER 1972

DAY	OCT	NOV	DEC	JAN	FEB	MAR	APR	MAY	JUN	JUL	AUG	SEP
1	10	11	12	95	39	30	25	19	15	11	8.3	8.3
2	10	12	12	104	38	30	22	19	16	11	8.6	9.0
3	9.9	11	13	134	36	30	23	20	16	11	8.8	9.0
4	9.3	11	13	81	35	30	23	20	16	11	8.9	9.0
5	9.3	10	14	72	38	30	24	20	16	11	9.0	9.0
6	8.9	11	14	65	35	29	24	20	16	11	9.1	9.1
7	8.9	11	13	58	35	29	25	20	16	11	9.2	9.2
8	8.9	11	12	61	35	29	25	19	16	11	9.0	9.3
9	8.4	11	12	80	35	29	25	19	16	11	8.7	9.4
10	8.0	11	12	71	35	29	24	19	16	10	8.5	9.4
11	8.0	11	12	66	33	28	24	19	16	10	8.3	9.4
12	8.0	12	12	66	32	27	25	19	16	10	8.7	9.3
13	8.0	12	12	68	31	28	25	18	15	10	9.1	9.2
14	8.0	12	12	64	31	28	24	18	15	10	9.5	9.1
15	8.9	12	12	59	31	28	23	18	15	10	9.4	9.1
16	11	12	12	57	31	28	21	18	15	10	9.4	9.1
17	11	12	12	53	30	27	21	18	15	9.9	9.3	9.1
18	10	12	12	51	30	28	23	18	15	9.4	9.0	9.1
19	11	12	12	49	30	27	23	18	15	9.0	8.8	8.9
20	10	12	12	45	30	27	22	18	15	8.6	8.5	8.7
21	10	12	12	42	31	27	21	18	15	8.6	8.2	8.6
22	10	12	36	42	32	27	20	18	15	8.7	8.2	8.5
23	10	12	34	42	32	27	20	18	15	8.7	8.3	8.4
24	12	12	380	42	32	26	20	18	14	8.8	8.3	8.3
25	13	12	378	41	31	26	20	18	13	8.6	8.3	8.2
26	12	12	319	41	31	26	20	18	12	8.4	8.3	8.2
27	12	12	202	41	30	26	20	17	12	8.2	8.3	8.2
28	13	12	145	40	30	26	20	17	12	8.3	8.3	8.2
29	12	12	116	39	30	26	20	17	11	8.4	8.3	8.2
30	12	12	102	39	------	26	20	16	11	8.5	8.3	8.2
31	11	------	97	39	------	25	------	16	------	8.5	8.3	------
TOTAL	312.5	349	2,068	1,847	949	859	672	568	441	299.6	269.2	264.7
MEAN	10.1	11.6	66.7	59.6	32.7	27.7	22.4	18.3	14.7	9.66	8.68	8.82
MAX	13	12	380	134	39	30	25	20	16	11	9.5	9.4
MIN	8.0	10	12	39	30	25	20	16	11	8.2	8.2	8.2
AC-FT	620	692	4,100	3,660	1,880	1,700	1,330	1,130	875	594	534	525

CAL YR 1971 TOTAL 10,725.4 MEAN 29.4 MAX 380 MIN 8.0 AC-FT 21,270
WTR YR 1972 TOTAL 8,899.0 MEAN 24.3 MAX 380 MIN 8.0 AC-FT 17,650

NOTE.--Stage-discharge relation indefinite May 15 to Sept. 30.

11082000 WEST FORK SAN GABRIEL RIVER AT CAMP RINCON, CALIF.

LOCATION.--Lat 34°14'28", long 117°51'45", Los Angeles County, in Angeles National Forest, on right bank 0.2 mile upstream from Camp Rincon, 0.5 mile downstream from North Fork, and 6 miles downstream from Cogswell Dam.

DRAINAGE AREA.--104 sq mi.

PERIOD OF RECORD.--October 1927 to current year.

GAGE.--Water-stage recorder. Datum of gage is 1,474.94 ft above mean sea level (levels by Los Angeles County Flood Control District). See WSP 1735 for history of changes prior to July 3, 1941.

AVERAGE DISCHARGE.--45 years, 68.0 cfs (49,270 acre-ft per year); median of yearly mean discharges, 33 cfs (23,900 acre-ft per year).

EXTREMES.--Current year: Maximum discharge, 791 cfs Dec. 24 (gage height, 15.88 ft); minimum daily, 5.5 cfs July 30 to Aug. 1, Sept. 30.
Period of record: Maximum discharge, 34,000 cfs (estimated) Mar. 2, 1938; no flow at times in 1928-29.

REMARKS.--Flow partly regulated by Cogswell flood-control reservoir since 1934 (capacity, 9,339 acre-ft). No diversion above station. See schematic diagram of San Gabriel and Los Angeles River basins.

COOPERATION.--Records furnished by Los Angeles County Flood Control District and reviewed by Geological Survey.

DISCHARGE, IN CUBIC FEET PER SECOND, WATER YEAR OCTOBER 1971 TO SEPTEMBER 1972

DAY	OCT	NOV	DEC	JAN	FEB	MAR	APR	MAY	JUN	JUL	AUG	SEP
1	21	12	9.6	72	28	20	13	10	8.4	6.4	5.5	23
2	20	12	9.6	72	26	19	13	10	8.4	6.6	5.8	23
3	20	12	12	70	26	19	13	9.8	8.4	6.6	6.1	25
4	20	12	10	65	25	17	13	9.8	8.4	6.6	6.1	23
5	20	12	10	63	29	16	13	10	8.8	6.3	6.0	23
6	20	11	10	63	28	15	12	10	9.2	6.1	5.9	23
7	20	11	10	63	26	15	13	10	9.0	6.1	6.0	20
8	20	10	9.6	62	25	15	13	10	9.2	6.1	6.0	8.4
9	23	10	10	60	23	15	13	10	9.0	6.0	6.1	7.7
10	22	11	11	60	23	15	13	10	8.6	6.1	20	7.6
11	22	11	11	62	22	14	13	10	8.2	6.2	22	6.6
12	22	14	10	63	22	16	14	9.6	8.2	6.3	25	6.5
13	22	13	12	63	21	18	14	9.6	8.0	6.4	22	6.4
14	22	12	11	58	22	18	13	9.2	8.0	6.3	17	6.3
15	23	12	10	41	29	16	13	9.2	7.8	6.3	21	6.2
16	24	12	10	38	23	16	12	9.2	7.8	6.3	21	6.1
17	25	11	10	38	22	16	12	9.4	8.0	6.2	22	6.0
18	22	12	10	35	21	16	13	10	7.8	6.3	16	6.0
19	23	11	9.6	33	20	15	13	11	7.8	6.4	20	6.1
20	23	11	9.6	32	20	15	13	12	8.0	6.5	23	6.0
21	23	12	9.6	35	20	14	13	11	8.0	6.4	22	5.8
22	22	12	53	33	20	14	12	10	8.6	6.3	22	5.6
23	22	12	29	32	20	14	12	9.8	9.2	6.2	22	5.6
24	25	11	423	32	21	14	11	9.8	8.8	6.0	23	5.6
25	25	11	453	30	21	14	11	10	8.2	6.0	23	5.9
26	24	10	290	30	20	14	11	9.8	7.7	5.8	25	5.9
27	24	10	162	29	20	14	11	9.6	7.4	5.8	25	5.9
28	24	10	89	29	19	14	10	9.2	6.9	5.7	23	5.9
29	23	10	67	29	19	14	10	8.8	6.4	5.6	23	5.6
30	14	10	55	28	------	14	10	8.6	6.4	5.5	23	5.5
31	12	------	55	28	------	13	------	8.6	------	5.5	23	------
TOTAL	672	340	1,890.6	1,448	661	479	370	304.0	244.6	190.9	536.5	303.2
MEAN	21.7	11.3	61.0	46.7	22.8	15.5	12.3	9.81	8.15	6.16	17.3	10.1
MAX	25	14	453	72	29	20	14	12	9.2	6.6	25	25
MIN	12	10	9.6	28	19	13	10	8.6	6.4	5.5	5.5	5.5
AC-FT	1,330	674	3,750	2,870	1,310	950	734	603	485	379	1,060	601

CAL YR 1971 TOTAL 12,610.6 MEAN 34.5 MAX 453 MIN 9.6 AC-FT 25,010
WTR YR 1972 TOTAL 7,439.8 MEAN 20.3 MAX 453 MIN 5.5 AC-FT 14,760

11084500 FISH CREEK NEAR DUARTE, CALIF.

LOCATION.--Lat 34°09'57", long 117°55'24", in SW¼SW¼SW¼ sec.15, T.1 N., R.10 W., Los Angeles County, on left bank 0.8 mile upstream from mouth of canyon, and 3.2 miles northeast of Duarte.

DRAINAGE AREA.--6.36 sq mi.

PERIOD OF RECORD.--July to September 1916, July 1917 to current year.

GAGE.--Water-stage recorder. Broad-crested weir since July 1917, restored in December 1938. Datum of gage is 905.9 ft above mean sea level. See WSP 1315-B for history changes prior to Dec. 7, 1938. Dec. 7, 1938, to Oct. 3, 1951, at datum 1 ft higher.

AVERAGE DISCHARGE.--55 years (1917-72), 4.55 cfs (3,300 acre-ft per year); median of yearly mean discharges, 2.3 cfs (1,700 acre-ft per year).

EXTREMES.--Current year: Maximum discharge, 64 cfs Dec. 24 (gage height, 2.59 ft); minimum daily, 0.10 cfs July 31.

Period of record: Maximum discharge, 13,000 cfs Jan. 25, 1969 (gage height, 11.98 ft, from inside gage), from rating curve extended above 1,100 cfs on basis of slope-area measurement of maximum flow; maximum gage height, about 14.5 ft Feb. 11, 16, 1959 (from debris wave); no flow at times in some years.

REMARKS.--No regulation or diversion above station. See schematic diagram of San Gabriel and Los Angeles River basins.

COOPERATION.--Records furnished by Los Angeles County Flood Control District and reviewed by Geological Survey.

DISCHARGE, IN CUBIC FEET PER SECOND, WATER YEAR OCTOBER 1971 TO SEPTEMBER 1972

DAY	OCT	NOV	DEC	JAN	FEB	MAR	APR	MAY	JUN	JUL	AUG	SEP
1	.50	1.0	1.0	5.6	1.6	1.1	1.1	1.0	.40	.20	.20	.50
2	.50	1.0	.98	5.3	1.6	1.1	1.1	1.0	.40	.20	.20	.50
3	.53	1.0	.96	5.1	1.6	1.1	1.1	1.0	.40	.20	.20	.50
4	.53	.90	.94	4.5	1.5	1.1	1.1	1.0	.30	.20	.20	.60
5	.53	.90	.90	3.8	1.8	1.1	1.1	1.0	.30	.20	.20	.20
6	.53	.90	.90	3.6	1.6	1.1	1.0	.90	.30	.20	.20	.30
7	.53	.80	.90	3.1	1.6	1.1	1.0	.90	.30	.20	.20	.30
8	.53	.80	.90	2.6	1.5	1.1	1.0	.80	.30	.20	.20	.30
9	.53	.80	.90	2.5	1.5	1.1	1.0	.80	.30	.30	.20	.40
10	.53	.80	.90	2.3	1.5	1.1	1.0	.80	.30	.30	.20	.80
11	.53	.80	.90	2.3	1.5	1.1	1.0	.70	.30	.30	.30	.40
12	.53	1.5	.90	2.3	1.4	1.1	1.0	.70	.70	.30	.40	.20
13	.53	1.4	.90	2.2	1.4	1.1	1.0	.70	.70	.30	.90	.30
14	.60	1.2	.92	2.2	1.4	1.1	1.0	.60	.60	.40	.90	.30
15	.60	1.2	.92	2.2	1.4	1.1	1.0	.60	.60	.40	.80	.30
16	.60	1.1	.92	2.1	1.4	1.1	1.0	.50	.50	.40	.80	.30
17	.70	1.1	.92	2.0	1.3	1.1	1.0	.50	.50	.40	.70	.30
18	.70	1.1	.91	2.0	1.3	1.1	1.0	.50	.40	.40	.50	.30
19	.70	1.0	.91	2.0	1.3	1.1	1.0	.50	.40	.50	.50	.30
20	.70	1.0	.91	2.0	1.2	1.1	1.0	.50	.30	.80	.50	.30
21	.80	1.0	.90	2.0	1.2	1.1	1.0	.40	.30	.70	.40	.30
22	.80	1.0	.90	1.9	1.2	1.1	1.0	.40	.30	.60	.30	.30
23	.80	1.0	2.2	1.9	1.2	1.1	1.0	.40	.30	.40	.30	.30
24	.90	1.0	23	1.9	1.2	1.1	1.0	.40	.20	.20	.30	.30
25	.90	1.0	12	1.8	1.2	1.1	1.0	.40	.20	.20	.60	.30
26	1.0	1.0	4.2	1.8	1.2	1.1	1.0	.40	.20	.20	.60	.30
27	1.0	1.0	10	1.7	1.2	1.1	1.0	.40	.20	.20	.80	.30
28	1.0	1.0	10	1.7	1.2	1.1	1.0	.40	.20	.20	.60	.30
29	1.0	1.0	9.8	1.7	1.2	1.1	1.0	.40	.20	.20	.40	.30
30	1.0	1.0	7.6	1.7	------	1.1	1.0	.40	.20	.20	.40	.30
31	1.0	------	6.6	1.7	------	1.1	------	.40	------	.10	.40	------
TOTAL	21.63	30.30	105.59	79.5	40.2	34.1	30.5	19.40	10.60	9.60	13.40	10.40
MEAN	.70	1.01	3.41	2.56	1.39	1.10	1.02	.63	.35	.31	.43	.35
MAX	1.0	1.5	23	5.6	1.8	1.1	1.1	1.0	.70	.80	.90	.80
MIN	.50	.80	.90	1.7	1.2	1.1	1.0	.40	.20	.10	.20	.20
AC-FT	43	60	209	158	80	68	60	38	21	19	27	21

CAL YR 1971 TOTAL 819.79 MEAN 2.25 MAX 24 MIN .50 AC-FT 1,630
WTR YR 1972 TOTAL 405.22 MEAN 1.11 MAX 23 MIN .10 AC-FT 804

11085000 SAN GABRIEL RIVER BELOW SANTA FE DAM, NEAR BALDWIN PARK, CALIF.

LOCATION.--Lat 34°06'44", long 117°58'07", in SE¼NE¼SW¼ sec.6, T.1 S., R.10 W., Los Angeles County, on left bank at stilling basin of outlet of Santa Fe flood-control dam, 500 ft downstream from axis of dam, and 1.7 miles north of Baldwin Park.

DRAINAGE AREA.--236 sq mi.

PERIOD OF RECORD.--October 1942 to current year.

GAGE.--Water-stage recorder. Datum of gage is 400.00 ft above mean sea level (levels by Corps of Engineers).

EXTREMES.--Current year: Maximum discharge, 14 cfs Dec. 24 (gage height, 10.33 ft); no flow most of year. Period of record: Maximum discharge, 30,900 cfs Jan. 26, 1969 (gage height, 22.20 ft); no flow for several months in each year.

REMARKS.--Records good. Flow regulated by Cogswell and San Gabriel flood-control reservoirs (combined capacity, 53,870 acre-ft), Morris Reservoir (capacity, 35,000 acre-ft), and Santa Fe flood-control reservoir (capacity, 32,640 acre-ft). Diversions above station for irrigation, power development, and ground-water replenishment. At times water diverted from right side of stilling basin to headwaters of Rio Hondo; 697 acre-ft diverted during current year. See schematic diagram of San Gabriel and Los Angeles River basins.

COOPERATION.--Records of diversion to Rio Hondo furnished by Los Angeles County Flood Control District.

DISCHARGE, IN CUBIC FEET PER SECOND, WATER YEAR OCTOBER 1971 TO SEPTEMBER 1972

DAY	OCT	NOV	DEC	JAN	FEB	MAR	APR	MAY	JUN	JUL	AUG	SEP
1			0	7.4								
2			0	3.5								
3			0	1.8								
4			0	0								
5			0	0								
6			0	0								
7			0	0								
8			0	0								
9			0	0								
10			0	0								
11			0	0								
12			0	0								
13			0	0								
14			0	0								
15			0	0								
16			0	0								
17			0	0								
18			0	0								
19			0	0								
20			0	0								
21			0	0								
22			0	0								
23			0	0								
24			4.0	0								
25			12	0								
26			11	0								
27			11	0								
28			11	0								
29			11	0								
30			10	0	------							
31		------	9.1	0	------		------		------			------
TOTAL	0	0	79.1	12.7	0	0	0	0	0	0	0	0
MEAN	0	0	2.55	.41	0	0	0	0	0	0	0	0
MAX	0	0	12	7.4	0	0	0	0	0	0	0	0
MIN	0	0	0	0	0	0	0	0	0	0	0	0
AC-FT	0	0	157	25	0	0	0	0	0	0	0	0
(a)	0	0	157	722	0	0	0	0	0	0	0	0

CAL YR 1971 TOTAL 1,180.09 MEAN 3.23 MAX 95 MIN 0 AC-FT 2,340 a 3,420
WTR YR 1972 TOTAL 91.80 MEAN .25 MAX 12 MIN 0 AC-FT 182 a 879

a Combined discharge, in acre-feet, of river and diversion to Rio Hondo.

11086300 SAN DIMAS CREEK BELOW SAN DIMAS DAM, CALIF.

LOCATION.--Lat 34°09'10", long 117°46'18", in SW¼SE¼ sec.24, T.1 N., R.9 W., Los Angeles County, on left bank 1,000 ft downstream from San Dimas Dam, and 3.7 miles northeast of San Dimas.

DRAINAGE AREA.--16.3 sq mi.

PERIOD OF RECORD.--October 1951 to current year. Prior to October 1956 monthly discharge only, published in WSP 1735.

GAGE.--Water-stage recorder and low-flow concrete control. Datum of gage is 1,325.0 ft above mean sea level (levels by Los Angeles County Flood Control District).

EXTREMES.--Current year: Maximum discharge, 14 cfs Sept. 26 (gage height, 0.54 ft); minimum daily, 0.06 cfs Dec. 23, 31.
Period of record: Maximum discharge, 4,280 cfs Jan. 25, 1969 (gage height, 6.98 ft), from rating curve extended above 600 cfs on basis of computation of maximum flow over dam; no flow at times in most years.

REMARKS.--Flow regulated by San Dimas flood-control reservoir (capacity, 756 acre-ft) and at times by old water tunnel 150 ft upstream. No diversion above station. See schematic diagram of San Gabriel and Los Angeles River basins.

COOPERATION.--Records furnished by Los Angeles County Flood Control District and reviewed by Geological Survey.

DISCHARGE, IN CUBIC FEET PER SECOND, WATER YEAR OCTOBER 1971 TO SEPTEMBER 1972

DAY	OCT	NOV	DEC	JAN	FEB	MAR	APR	MAY	JUN	JUL	AUG	SEP
1	8.7	.75	.60	.12	2.5	1.0	.60	.30	.75	.75	.90	.60
2	8.7	.75	.60	.12	1.6	.90	.60	.30	.90	.75	.90	.50
3	8.7	.45	.60	.12	1.6	.90	.60	.30	.90	.75	.90	.50
4	8.7	.45	.60	6.1	1.6	.75	.60	.30	.90	.75	.80	.50
5	8.7	.45	.45	9.8	1.6	.75	.60	.30	.90	.75	.80	.52
6	7.7	.45	.27	9.8	1.6	.75	.60	.30	.90	.75	.80	.45
7	9.3	.45	.12	8.7	1.6	.75	.60	.30	.90	.75	.80	.45
8	9.3	.45	.12	9.8	1.6	.75	.60	.30	.90	.75	.80	.30
9	9.3	.45	.12	9.8	1.6	.75	.60	.30	.90	.75	.80	.30
10	8.7	.45	.12	9.8	1.6	.90	.60	.30	.90	.75	.80	.30
11	8.7	.45	.12	6.7	1.6	1.0	.60	.30	.90	.75	.80	.30
12	8.7	.30	.12	8.7	1.6	1.0	.60	.30	.90	.75	.80	.30
13	9.3	.30	.12	9.8	1.6	1.0	.45	.30	.90	.75	.80	.30
14	6.7	.30	.09	9.3	1.6	1.0	.45	.30	.90	.75	.70	.30
15	5.1	.30	.09	8.2	1.6	1.0	.45	.90	.90	.90	.70	4.0
16	5.1	.30	.09	6.7	1.6	1.0	.45	1.0	.90	.90	.70	6.7
17	5.1	.30	.09	6.7	1.6	1.0	.30	1.0	.90	.90	.70	6.1
18	5.1	.30	.09	5.6	1.6	1.0	.30	1.0	.90	.90	.70	1.8
19	1.5	.30	.09	5.6	1.6	1.0	.30	1.0	.90	.90	.70	.45
20	.60	.30	.09	4.4	1.6	1.0	.30	1.0	.90	.90	.70	.45
21	.60	.30	.09	4.1	1.8	1.0	.30	1.0	.90	.90	.70	.45
22	.60	.45	.12	4.1	1.8	.90	.30	1.0	.90	.90	.70	.45
23	.60	.45	.06	3.8	2.1	.90	.30	1.0	.90	.90	.60	.45
24	.75	.75	.21	3.8	2.1	.75	.30	.90	.90	.90	.60	.45
25	.75	.90	.15	3.4	2.1	.60	.30	.90	.90	.90	.60	4.8
26	.90	.75	.09	3.4	2.1	.60	.30	.90	.75	.90	.60	10
27	.90	.60	.15	3.8	1.2	.60	.30	.90	.75	.90	.60	10
28	.90	.60	.12	3.8	1.0	.60	.30	.90	.75	.90	.60	10
29	.75	.60	.12	3.8	1.0	.60	.30	.90	.75	.90	.60	9.8
30	.75	.60	.09	3.8	------	.60	.30	.75	.75	.90	.60	9.3
31	.75	------	.06	3.4	------	.60	------	.75	------	.90	.60	------
TOTAL	151.95	14.25	5.85	177.06	48.1	25.95	13.20	20.00	26.10	25.80	22.40	80.82
MEAN	4.90	.48	.19	5.71	1.66	.84	.44	.65	.87	.83	.72	2.69
MAX	9.3	.90	.60	9.8	2.5	1.0	.60	1.0	.90	.90	.90	10
MIN	.60	.30	.06	.12	1.0	.60	.30	.30	.75	.75	.60	.30
AC-FT	301	28	12	351	95	51	26	40	52	51	44	160

CAL YR 1971 TOTAL 924.86 MEAN 2.53 MAX 14 MIN .01 AC-FT 1,830
WTR YR 1972 TOTAL 611.48 MEAN 1.67 MAX 10 MIN .06 AC-FT 1,210

NOTE.--No gage-height record Aug. 2 to Sept. 5.

11086990 SAN JOSE CREEK NEAR EL MONTE, CALIF.

LOCATION.--Lat 34°01'55", long 118°00'40", in El Monte Grant, Los Angeles County, on right bank of San Jose flood channel, 1,650 ft upstream from Workman Mill Road, and 2.7 miles southeast of El Monte.

DRAINAGE AREA.--87.8 sq mi.

PERIOD OF RECORD.--October 1964 to current year.

GAGE.--Water-stage recorder. Datum of gage is 248.52 ft above mean sea level (levels by Los Angeles County Flood Control District).

AVERAGE DISCHARGE.--8 years, 29.7 cfs (21,520 acre-ft per year).

EXTREMES.--Current year: Maximum discharge, 3,720 cfs Dec. 24 (gage height, 5.10 ft); minimum daily, 3.0 cfs July 26.
Period of record: Maximum discharge, 10,200 cfs Jan. 24, 1967 (gage height, 6.80 ft, from outside gage); no flow for some days in some years.

REMARKS.--Records poor below 20 cfs. No regulation above station. One small diversion for ground-water recharge. At times effluent from city of Pomona's sewage reclamation plant is released to creek above Spadra and at Lemon Street. Bypass to the original San Jose Creek channel has been closed since Oct. 1, 1964. See schematic diagram of San Gabriel and Los Angeles River basins.

COOPERATION.--Records furnished by Los Angeles County Flood Control District and reviewed by Geological Survey.

DISCHARGE, IN CUBIC FEET PER SECOND, WATER YEAR OCTOBER 1971 TO SEPTEMBER 1972

DAY	OCT	NOV	DEC	JAN	FEB	MAR	APR	MAY	JUN	JUL	AUG	SEP
1	9.0	11	14	12	8.0	13	15	11	9.4	7.9	5.6	10
2	9.0	11	13	12	8.4	13	15	12	9.7	6.9	6.0	10
3	9.0	11	12	12	8.5	14	15	14	10	5.8	6.2	30
4	9.0	11	11	13	8.6	15	15	13	10	4.8	6.3	9.0
5	9.0	11	10	13	8.7	15	15	12	11	4.8	6.5	9.0
6	10	11	9.0	13	8.8	15	15	11	11	4.7	6.7	8.8
7	10	11	8.0	12	8.9	15	15	10	12	4.6	6.8	8.0
8	10	11	7.1	11	9.0	15	15	9.4	12	4.5	7.0	8.0
9	10	11	10	10	9.2	16	15	8.4	12	4.4	7.1	7.0
10	10	11	12	9.0	9.6	17	14	7.5	13	4.3	9.0	6.0
11	11	15	12	8.0	10	18	14	7.0	13	4.2	10	5.0
12	11	93	20	8.7	11	19	14	6.5	13	4.2	272	5.0
13	12	11	15	8.7	11	19	14	6.0	14	5.3	20	4.8
14	12	10	12	8.7	12	19	14	5.5	14	6.4	10	5.0
15	11	9.5	6.0	8.7	13	19	14	5.0	13	7.5	9.0	6.0
16	10	9.3	7.0	8.7	13	19	14	4.4	12	8.6	7.1	7.0
17	10	9.1	8.0	8.7	13	18	14	3.9	11	9.7	7.1	8.0
18	9.0	10	9.0	8.7	13	17	18	4.3	10	11	7.1	9.0
19	8.0	10	10	8.7	13	16	36	4.6	9.5	12	7.1	9.0
20	7.0	11	11	8.7	13	15	12	5.0	8.6	11	7.1	8.8
21	8.0	11	11	9.0	13	14	12	5.4	7.6	9.4	7.0	9.0
22	9.0	12	279	10	13	14	12	5.7	8.1	8.1	7.0	9.0
23	10	13	11	10	13	14	12	6.1	8.6	6.8	7.0	9.0
24	153	14	988	11	13	14	12	6.5	9.1	5.5	7.0	9.0
25	10	14	209	12	13	14	12	6.8	9.6	4.2	7.0	9.0
26	10	14	58	12	13	15	12	7.2	10	3.0	8.0	9.0
27	10	14	612	12	13	15	11	7.6	10	3.4	25	9.0
28	10	14	122	11	13	15	10	7.9	11	3.9	9.0	9.0
29	10	14	12	10	13	15	10	8.3	10	4.3	9.0	9.0
30	10	14	12	10	------	15	10	8.6	8.9	4.7	11	9.0
31	10	------	12	9.0	------	15	------	9.0	------	5.2	11	------
TOTAL	446.0	431.9	2,542.1	319.3	326.7	487	426	239.6	321.1	191.1	531.7	263.4
MEAN	14.4	14.4	82.0	10.3	11.3	15.7	14.2	7.73	10.7	6.16	17.2	8.78
MAX	153	93	988	13	13	19	36	14	14	12	272	30
MIN	7.0	9.1	6.0	8.0	8.0	13	10	3.9	7.6	3.0	5.6	4.8
AC-FT	885	857	5,040	633	648	966	845	475	637	379	1,050	522

CAL YR 1971 TOTAL 6,936.8 MEAN 19.0 MAX 988 MIN 5.0 AC-FT 13,760
WTR YR 1972 TOTAL 6,525.9 MEAN 17.8 MAX 988 MIN 3.0 AC-FT 12,940

11087020 SAN GABRIEL RIVER ABOVE WHITTIER NARROWS DAM, CALIF.

LOCATION.--Lat 34°02'00", long 118°02'14", in La Puente Grant, Los Angeles County, on downstream side of bridge near center on Peck Road, 0.8 mile downstream from San Jose flood channel, 1.2 miles upstream from axis of Whittier Narrows Dam, and 1.8 miles south of El Monte.

DRAINAGE AREA.--353 sq mi.

PERIOD OF RECORD.--October 1955 to September 1957, October 1963 to current year.

GAGE.--Water-stage recorder. Altitude of gage is 220 ft (from topographic map).

EXTREMES.--Current year: Maximum discharge, 12,100 cfs Dec. 24 (gage height, 7.23 ft); minimum daily, 2.8 cfs July 12, Aug. 10.
Period of record: Maximum discharge, 46,600 cfs Jan. 25, 1969 (gage height, 10.90 ft); no flow for part of most years.

REMARKS.--Records good. Flow regulated by San Gabriel, Cogswell, and Santa Fe flood-control reservoirs (combined capacity, 90,670 acre-ft), several small flood-control reservoirs (combined capacity, 19,100 acre-ft), and Morris Reservoir (capacity, 35,000 acre-ft). Many diversions above station for irrigation, power development, and ground-water replenishment. Colorado River water released to the San Gabriel River at a site 14.9 miles upstream from gage, at Metropolitan Water District aqueduct crossing on San Dimas Creek for ground-water replenishment. Los Angeles County Flood Control District diverted 697 acre-ft of water from San Gabriel River below Santa Fe Dam to Rio Hondo during current year. See schematic diagram of San Gabriel and Los Angeles River basins.

COOPERATION.--Records of diversion to Rio Hondo and Colorado River release figures furnished by Los Angeles County Flood Control District.

DISCHARGE, IN CUBIC FEET PER SECOND, WATER YEAR OCTOBER 1971 TO SEPTEMBER 1972

DAY	OCT	NOV	DEC	JAN	FEB	MAR	APR	MAY	JUN	JUL	AUG	SEP
1	140	190	93	13	101	10	5.5	8.7	7.9	7.1	4.3	4.5
2	146	208	75	12	110	11	6.0	8.4	8.0	6.2	4.7	5.1
3	140	208	22	14	110	11	6.1	9.5	8.0	5.3	4.4	15
4	140	208	14	13	97	11	9.0	10	7.8	6.0	4.3	7.6
5	146	214	14	110	40	12	9.2	9.4	8.0	5.6	4.2	5.1
6	162	214	14	179	97	13	9.6	8.3	8.3	5.8	3.9	5.1
7	162	208	14	179	97	16	9.8	7.4	9.2	5.9	3.9	4.9
8	133	208	157	179	97	16	9.7	8.4	8.6	6.7	4.1	4.4
9	101	214	179	184	78	7.0	9.1	9.2	8.2	5.2	3.3	5.4
10	93	214	179	184	60	8.0	10	10	6.5	5.3	2.8	5.1
11	93	179	179	184	12	9.0	10	11	7.0	5.3	4.3	5.5
12	93	142	144	184	6.0	9.0	9.3	10	7.7	2.8	67	4.7
13	97	10	46	190	6.0	9.0	11	9.7	8.7	4.2	7.5	5.1
14	97	9.0	179	190	6.0	10	11	9.1	9.5	4.5	4.3	6.9
15	97	12	179	184	7.0	11	10	10	9.6	4.7	4.2	10
16	15	196	179	184	10	10	9.9	10	9.5	5.1	3.7	11
17	10	208	179	184	9.0	9.0	10	6.2	8.1	5.0	3.3	12
18	27	196	179	190	10	8.0	15	7.1	7.6	4.5	3.7	13
19	157	90	179	190	9.0	6.0	31	10	8.4	4.7	4.6	11
20	157	90	179	190	7.0	7.0	12	15	8.3	5.2	4.0	8.0
21	162	90	145	190	7.0	7.0	8.9	9.6	8.3	5.8	4.2	9.9
22	184	112	631	179	8.0	7.0	7.0	9.6	8.6	4.5	4.6	11
23	184	179	20	179	7.0	8.0	8.1	9.6	8.2	3.7	3.8	8.2
24	395	179	2,700	184	7.0	8.0	8.4	8.4	7.8	3.4	3.8	6.4
25	22	179	390	151	7.0	7.0	9.1	9.1	6.9	4.1	3.8	6.5
26	11	179	137	20	7.0	6.0	8.1	9.3	7.4	3.9	4.3	7.6
27	9.0	179	1,570	15	7.0	7.0	6.5	8.3	6.8	4.1	7.0	8.3
28	8.0	179	286	15	7.0	5.0	6.7	8.6	6.3	4.9	5.7	8.8
29	30	156	26	16	7.0	5.0	7.9	8.2	5.9	5.1	4.7	8.3
30	179	181	15	15	------	6.0	8.1	9.0	7.5	4.8	4.3	9.8
31	184	------	16	18	------	5.5	------	7.9	------	4.8	4.1	------
TOTAL	3,574.0	4,831.0	8,319	3,919	1,033.0	274.5	292.0	285.0	238.6	154.2	196.8	234.2
MEAN	115	161	268	126	35.6	8.85	9.73	9.19	7.95	4.97	6.35	7.81
MAX	395	214	2,700	190	110	16	31	15	9.6	7.1	67	15
MIN	8.0	9.0	14	12	6.0	5.0	5.5	6.2	5.9	2.8	2.8	4.4
AC-FT	7,090	9,580	16,500	7,770	2,050	544	579	565	473	306	390	465
(a)	7,000	8,860	4,720	7,340	1,670	0	0	0	0	0	0	0

CAL YR 1971 TOTAL 40,287.5 MEAN 110 MAX 2,700 MIN 4.0 AC-FT 79,910 AC-FT a 67,260
WTR YR 1972 TOTAL 23,351.3 MEAN 63.8 MAX 2,700 MIN 2.8 AC-FT 46,320 AC-FT a 29,590

a Colorado River water, in acre-feet, released to river.

11087500 SAN GABRIEL RIVER AT PICO, CALIF.

LOCATION.--Lat 34°00'47", long 118°03'48", in Paso de Bartolo Grant, Los Angeles County, on right levee 460 ft downstream from San Gabriel River Parkway, 4,200 ft downstream from axis of Whittier Narrows Dam, and 1.4 miles northeast of Pico Rivera.

DRAINAGE AREA.--447 sq mi.

PERIOD OF RECORD.--October 1928 to current year. Since 1954 Colorado River water released to San Gabriel River above station. Since 1954 records not equivalent.

GAGE.--Water-stage recorder. Datum of gage is 181.55 ft above mean sea level. See WSP 1735 for history of changes prior to Mar. 6, 1952. Mar. 6, 1952, to Aug. 9, 1968, at bridge 0.5 mile downstream at datum 9.05 ft lower.

EXTREMES.--Current year: Maximum discharge, 6,970 cfs Dec. 24 (gage height, 5.95 ft); no flow Aug. 5-11, 14-17, Aug. 30, Sept. 14-30.
Period of record: Maximum discharge, 22,700 cfs Mar. 2, 1938; no flow for periods in most years.

REMARKS.--Flow regulated by Cogswell Reservoir since 1934 and San Gabriel flood-control reservoir since 1939 (combined capacity, 46,087 acre-ft), Morris Reservoir since 1934 (capacity, 35,000 acre-ft), Santa Fe flood-control reservoir since October 1942 (capacity, 36,800 acre-ft), Whittier Narrows flood-control reservoir since January 1956 (capacity, 36,160 acre-ft), and several small flood-control reservoirs (combined capacity, 19,100 acre-ft). Diversions for irrigation, power development, and ground-water replenishment. For Colorado River water released to San Gabriel River for ground-water replenishment see sta 11087020. During the current year, 697 acre-ft was diverted from the San Gabriel River below Santa Fe Dam to Rio Hondo. See schematic diagram of San Gabriel and Los Angeles River basins.

COOPERATION.--Records furnished by Los Angeles County Flood Control District and reviewed by Geological Survey.

DISCHARGE, IN CUBIC FEET PER SECOND, WATER YEAR OCTOBER 1971 TO SEPTEMBER 1972

DAY	OCT	NOV	DEC	JAN	FEB	MAR	APR	MAY	JUN	JUL	AUG	SEP
1	27	114	11	16	38	29	8.4	28	2.6	20	22	19
2	31	125	19	15	11	32	7.0	30	2.6	20	20	19
3	31	118	18	18	12	31	6.0	32	2.6	20	20	19
4	18	114	12	16	34	27	5.0	31	2.6	20	14	20
5	9.2	106	11	28	44	26	4.4	32	2.5	12	0	20
6	52	104	11	104	102	16	4.4	31	2.6	3.8	0	20
7	14	104	12	96	78	11	4.4	29	2.8	3.8	0	23
8	94	104	86	94	62	11	5.7	28	3.1	3.8	0	23
9	129	104	98	94	62	12	5.7	30	3.1	3.8	0	23
10	129	104	98	117	54	12	6.0	29	2.8	3.8	0	23
11	131	75	98	144	19	12	6.7	28	2.5	14	0	23
12	133	129	103	80	12	11	6.7	29	2.3	24	34	23
13	131	17	48	82	11	11	7.0	28	2.3	25	3.0	13
14	129	15	100	82	11	13	7.4	27	2.5	25	0	0
15	116	14	110	73	12	13	6.7	26	2.5	23	0	0
16	26	73	104	73	12	12	6.7	26	2.6	24	0	0
17	11	22	96	74	12	12	6.7	20	2.5	25	0	0
18	8.1	90	90	84	12	12	7.4	4.4	2.2	25	7.0	0
19	83	14	84	90	12	10	16	4.4	2.2	26	21	0
20	90	9.5	86	90	10	16	11	6.7	2.8	25	20	0
21	90	9.5	86	92	10	22	7.8	5.4	2.5	25	20	0
22	82	26	627	90	12	12	5.7	4.4	2.6	26	21	0
23	82	86	26	90	12	10	5.4	4.7	14	28	20	0
24	272	98	1,670	96	10	11	4.7	4.4	22	28	20	0
25	38	86	215	67	9.5	9.2	5.0	4.7	23	26	18	0
26	11	88	103	14	11	8.4	5.0	5.0	22	26	20	0
27	11	90	1,900	13	12	8.4	6.0	4.4	21	24	20	0
28	11	90	646	13	19	8.4	12	3.8	20	26	20	0
29	11	67	39	13	19	8.1	23	2.6	20	26	13	0
30	100	73	19	12	------	8.1	25	2.6	19	25	0	0
31	110	------	14	11	------	8.8	------	2.6	------	22	6.0	------
TOTAL	2,210.3	2,269.0	6,640	1,981	734.5	443.4	238.9	544.1	217.8	629.0	339.0	268
MEAN	71.3	75.6	214	63.9	25.3	14.3	7.96	17.6	7.26	20.3	10.9	8.93
MAX	272	129	1,900	144	102	32	25	32	23	28	34	23
MIN	8.1	9.5	11	11	9.5	8.1	4.4	2.6	2.2	3.8	0	0
AC-FT	4,380	4,500	13,170	3,930	1,460	879	474	1,080	432	1,250	672	532

CAL YR 1971 TOTAL 26,573.0 MEAN 72.8 MAX 1,900 MIN 2.6 AC-FT 52,710
WTR YR 1972 TOTAL 16,515.0 MEAN 45.1 MAX 1,900 MIN 0 AC-FT 32,760

11088000 SAN GABRIEL RIVER AT SPRING STREET, NEAR LOS ALAMITOS, CALIF.

LOCATION.--Lat 33°48'43", long 118°05'24", in SE¼SE¼NW¼ sec.24, T.4 S., R.12 W., Los Angeles County, on right levee 455 ft upstream from Spring Street bridge, 1.3 miles upstream from Coyote Creek, and 1.3 miles northwest of Los Alamitos.

DRAINAGE AREA.-472 sq mi.

PERIOD OF RECORD.--October 1927 to September 1951, October 1952 to current year. Monthly discharge only for October 1927 to September 1936, published in WSP 1315-B.

GAGE.--Water-stage recorder. Datum of gage is 11.87 ft above mean sea level (levels by Los Angeles County Flood Control District). Prior to October 1952, at datum 4.82 ft higher and October 1952 to Nov. 17, 1964, at site 455 ft downstream at datum 0.38 ft higher.

AVERAGE DISCHARGE.--44 years, 28.8 cfs (20,870 acre-ft per year); median of yearly mean discharges, 5.9 cfs (4,300 acre-ft per year).

EXTREMES.--Current year: Maximum discharge, 8,580 cfs Dec. 24 (gage height, 8.35 ft); minimum daily, 0.12 cfs Nov. 18.
Period of record: Maximum discharge, 27,000 cfs (estimated) Mar. 2, 1938; no flow for several months in most years.

REMARKS.--Regulation and diversions same as sta 11087500. Additional diversion to percolation basin near Washington Boulevard and percolation basins in streambed. AVERAGE DISCHARGE represents flow to ocean during period of record regardless of upstream development. See schematic diagram of San Gabriel and Los Angeles River basins.

COOPERATION.--Records furnished by Los Angeles County Flood Control District and reviewed by Geological Survey.

DISCHARGE, IN CUBIC FEET PER SECOND, WATER YEAR OCTOBER 1971 TO SEPTEMBER 1972

DAY	OCT	NOV	DEC	JAN	FEB	MAR	APR	MAY	JUN	JUL	AUG	SEP
1	13	18	11	52	14	49	53	59	55	58	60	62
2	13	18	13	58	14	48	48	59	55	51	58	59
3	13	19	16	56	13	51	51	58	55	58	62	58
4	14	19	16	49	14	50	54	53	55	54	59	57
5	14	18	9.8	44	19	49	55	57	55	55	56	66
6	14	18	9.3	30	18	54	54	51	55	63	54	65
7	14	19	13	11	14	54	55	48	67	59	56	65
8	14	20	9.3	12	14	55	52	57	62	58	58	60
9	14	20	2.7	12	14	52	49	57	62	50	60	58
10	16	20	9.3	13	15	56	53	52	60	55	62	57
11	16	22	9.3	13	26	54	53	52	54	57	59	60
12	15	32	13	13	52	52	54	52	56	60	85	58
13	15	17	23	13	49	58	55	49	54	60	58	60
14	14	14	15	14	55	60	55	49	58	59	57	60
15	13	18	12	14	54	58	54	56	57	56	60	58
16	17	17	15	13	54	57	49	57	55	49	56	62
17	20	14	12	14	55	58	53	56	53	51	57	58
18	24	.12	11	14	56	56	53	55	43	56	58	68
19	16	6.1	14	14	53	52	81	55	50	56	58	64
20	15	13	13	14	47	58	55	55	55	59	43	63
21	14	14	13	14	48	57	50	55	54	62	53	58
22	16	13	445	14	51	55	49	55	54	58	55	58
23	16	13	46	14	49	55	48	55	55	54	58	55
24	39	13	1,980	13	50	57	52	55	56	56	58	48
25	69	9.8	295	14	49	60	56	55	55	57	59	56
26	18	14	233	13	50	53	57	55	58	57	58	56
27	20	13	1,400	13	49	56	57	55	62	59	53	57
28	18	13	442	14	53	55	65	55	59	60	60	56
29	18	12	84	14	52	55	59	55	62	58	62	56
30	18	11	52	13	------	56	57	55	60	53	62	55
31	19	------	53	12	------	56	------	55	------	56	62	------
TOTAL	569	468.02	5,289.7	621	1,101	1,696	1,636	1,692	1,691	1,754	1,816	1,773
MEAN	18.4	15.6	171	20.0	38.0	54.7	54.5	54.6	56.4	56.6	58.6	59.1
MAX	69	32	1,980	58	56	60	81	59	67	63	85	68
MIN	13	.12	2.7	11	13	48	48	48	43	49	43	48
AC-FT	1,130	928	10,490	1,230	2,180	3,360	3,250	3,360	3,350	3,480	3,600	3,520

CAL YR 1971 TOTAL 8,798.62 MEAN 24.1 MAX 1,980 MIN 0 AC-FT 17,450
WTR YR 1972 TOTAL 20,106.72 MEAN 54.9 MAX 1,980 MIN .12 AC-FT 39,880

11088500 BREA CREEK BELOW BREA DAM, NEAR FULLERTON, CALIF.

LOCATION.--Lat 33°53'16", long 117°55'32", in NE¼NE¼NE¼ sec.28, T.3 S., R.10 W., Orange County, on right bank 0.2 mile downstream from Brea Dam, and 1 mile north of Fullerton.

DRAINAGE AREA.--21.6 sq mi.

PERIOD OF RECORD.--January 1942 to current year.

GAGE.--Water-stage recorder. V-notch sharp-crested weir since October 1946. Datum of gage is 196.67 ft above mean sea level (levels by Corps of Engineers). Prior to Dec. 4, 1964, at datum 1.03 ft higher.

AVERAGE DISCHARGE.--30 years, 1.09 cfs (790 acre-ft per year); median of yearly mean discharges, 0.5 cfs (360 acre-ft per year).

EXTREMES.--Current year: Maximum discharge, 270 cfs Dec. 24 (gage height, 6.04 ft); minimum daily, 0.03 cfs Oct. 2.
Period of record: Maximum discharge, 970 cfs Feb. 25, 1969 (gage height, 6.30 ft), from rating curve extended above 340 cfs; no flow for parts of most years.

REMARKS.--Records good. Flow regulated by Brea flood-control reservoir (capacity, 4,100 acre-ft). No diversion above station. Since August 1966, low flow mostly the result of irrigation waste water from golf course 0.8 mile upstream. See schematic diagram of San Gabriel and Los Angeles River basins.

DISCHARGE, IN CUBIC FEET PER SECOND, WATER YEAR OCTOBER 1971 TO SEPTEMBER 1972

DAY	OCT	NOV	DEC	JAN	FEB	MAR	APR	MAY	JUN	JUL	AUG	SEP
1	.06	.14	.20	.36	.26	.29	.24	.21	.21	.08	.18	.28
2	.03	.12	.20	.26	.25	.28	.23	.19	.20	.11	.18	.28
3	.04	.10	.33	.25	.48	.24	.22	.20	.20	.08	.17	.90
4	.06	.23	.38	.23	.32	.22	.22	.23	.20	.08	.18	.33
5	.08	.20	.17	.25	.25	.26	.23	.24	.20	.08	.17	.19
6	.17	.14	.19	.27	.25	.22	.21	.21	.20	.08	.17	.16
7	.14	.17	.18	.28	.27	.22	.26	.20	.25	.08	.18	.16
8	.14	.20	.22	.36	.25	.24	.29	.22	.15	.07	.18	.21
9	.04	.17	.19	.26	.24	.25	.22	.21	.20	.07	.24	.25
10	.04	.17	.19	.23	.22	.26	.20	.21	.15	.08	.24	.23
11	.04	.20	.19	.24	.24	.25	.18	.21	.15	.06	.20	.34
12	.04	2.3	.19	.22	.24	.26	.20	.21	.15	.07	3.5	.32
13	.06	.14	.55	.22	.26	.25	.18	.21	.14	.08	.26	.47
14	1.9	.14	.18	.20	.25	.28	.19	.21	.16	.08	.13	.58
15	.20	.12	.18	.24	.26	.29	.17	.21	.18	.07	.15	.70
16	.08	.14	.19	.28	.27	.30	.15	.21	.15	.07	.17	.48
17	.06	.14	.20	.27	.26	.29	.18	.21	.14	.07	.17	.67
18	.06	.12	.20	.29	.28	.34	.19	.21	.22	.07	.19	.66
19	.08	.12	.21	.30	.28	.33	1.5	.21	.24	.07	.15	.54
20	.10	.17	.21	.28	.29	.36	.20	.21	.29	.07	.15	.74
21	.12	.17	.21	.31	.25	.30	.17	.21	.16	.08	.14	.71
22	.17	.17	25	.30	.29	.31	.20	.21	.25	.05	.12	.67
23	.12	.20	.82	.29	.29	.28	.17	.21	.22	.10	.18	.56
24	4.8	.20	102	.29	.26	.29	.17	.21	.23	.09	.11	.50
25	.20	.17	10	.26	.29	.28	.17	.21	.21	.10	.12	.39
26	.08	.17	4.9	.23	.26	.23	.18	.21	.20	.22	.15	.35
27	.08	.20	79	.22	.26	.25	.21	.21	.14	.10	.15	.61
28	.06	.17	13	.27	.23	.24	.22	.21	.11	.11	.24	.66
29	.08	.41	1.3	.35	.42	.25	.20	.21	.15	.13	.28	.42
30	.10	.31	.74	.23	------	.21	.19	.21	.14	.14	.25	.34
31	.08	------	.41	.28	------	.24	------	.21	------	.19	.30	------
TOTAL	9.31	7.40	241.93	8.32	7.97	8.31	7.34	6.53	5.59	2.83	9.00	13.70
MEAN	.30	.25	7.80	.27	.27	.27	.24	.21	.19	.091	.29	.46
MAX	4.8	2.3	102	.36	.48	.36	1.5	.24	.29	.22	3.5	.90
MIN	.03	.10	.17	.20	.22	.21	.15	.19	.11	.05	.11	.16
AC-FT	18	15	480	17	16	16	15	13	11	5.6	18	27

CAL YR 1971 TOTAL 397.87 MEAN 1.09 MAX 102 MIN .03 AC-FT 789
WTR YR 1972 TOTAL 328.23 MEAN .90 MAX 102 MIN .03 AC-FT 651

11089500 FULLERTON CREEK BELOW FULLERTON DAM, NEAR BREA, CALIF.

LOCATION.--Lat 33°53'45", long 117°53'07", in NE¼NW¼SW¼ sec.24, T.3 S., R.10 W., Orange County, on left bank of outlet channel of Fullerton Dam, 1.6 miles southeast of Brea.

DRAINAGE AREA.--4.94 sq mi.

PERIOD OF RECORD.--October 1941 to current year.

GAGE.--Water-stage recorder. Altitude of gage is 250 ft (from topographic map). V-notch sharp-crested weir used Oct. 25, 1946, to Feb. 2, 1956. Prior to Dec. 3, 1971, at datum 3.00 ft higher.

AVERAGE DISCHARGE.--13 years (1941-54), 0.19 cfs (135 acre-ft per year); median of yearly mean discharges, 0.02 cfs (14 acre-ft per year); 18 years (1954-72), 0.51 cfs (369 acre-ft per year); median of yearly mean discharges, 0.3 cfs (220 acre-ft per year).

EXTREMES.--Current year: Maximum discharge, 23 cfs Dec. 24 (gage height, 3.84 ft); no flow most of year. Period of record: Maximum discharge, 313 cfs Jan. 25, 1969 (gage height, 7.32 ft, present datum); no flow at times in each year.

REMARKS.--Records good. Flow regulated by Fullerton flood-control reservoir (capacity, 706 acre-ft). Small tributary formerly entering below station diverted into reservoir since December 1954. See schematic diagram of San Gabriel and Los Angeles River basins.

DISCHARGE, IN CUBIC FEET PER SECOND, WATER YEAR OCTOBER 1971 TO SEPTEMBER 1972

DAY	OCT	NOV	DEC	JAN	FEB	MAR	APR	MAY	JUN	JUL	AUG	SEP
1	0	0	0	.07	0		0	0	0	.04	.08	.08
2	0	0	0	.06	0		0	0	0	.07	.07	.06
3	0	0	0	.05	0		0	0	0	.03	.10	.09
4	0	0	0	0	0		0	0	0	.02	.12	.09
5	0	0	0	0	0		0	0	0	.02	.09	.07
6	0	0	0	.03	0		0	0	0	.05	.03	.06
7	0	0	0	.01	0		0	0	0	.05	.03	.06
8	0	0	0	.01	0		0	0	0	.03	.02	.06
9	0	0	0	0	0		0	0	.29	.08	.04	.05
10	0	0	0	0	0		0	0	.04	.10	.03	.04
11	0	0	0	0	0		0	.03	.01	.05	.04	.03
12	0	.51	0	0	0		0	.01	0	.05	1.5	.02
13	0	0	0	0	0		0	.01	0	.05	.08	.02
14	0	0	0	0	0		0	0	0	.04	.06	.01
15	0	0	0	0	0		0	0	0	.03	.04	0
16	0	0	0	0	0		0	0	.02	.03	.08	0
17	0	0	0	0	0		0	0	.03	.02	.10	0
18	0	0	0	0	0		0	0	.02	.02	.05	0
19	0	0	0	0	0		.72	0	.01	.01	.12	0
20	0	0	0	0	0		.04	0	0	0	.18	0
21	0	0	0	0	.04		.02	0	.03	0	.19	0
22	0	0	7.3	0	.03		0	0	.07	0	.13	0
23	0	0	.06	0	.01		0	.01	0	0	.10	.01
24	.02	0	13	0	0		0	.04	.02	0	.19	.06
25	0	0	20	0	0		0	.05	.04	0	.15	.06
26	0	0	9.6	0	0		0	.03	.01	0	.15	.06
27	0	0	11	0	0		0	.02	.07	0	.17	.06
28	0	0	15	0	0		0	0	.06	0	.10	.04
29	0	0	14	0	0		0	0	.02	.03	.06	.04
30	0	0	12	0	------		0	0	.04	.06	.09	.03
31	0	------	.70	0	------		------	0	------	.08	.05	------
TOTAL	.02	.51	102.66	.23	.08	0	.78	.20	.78	.96	4.24	1.10
MEAN	.0006	.017	3.31	.007	.003	0	.026	.007	.026	.031	.14	.037
MAX	.02	.51	20	.07	.04	0	.72	.05	.29	.10	1.5	.09
MIN	0	0	0	0	0	0	0	0	0	0	.02	0
AC-FT	.04	1.0	204	.5	.2	0	1.6	.4	1.6	1.9	8.4	2.2

CAL YR 1971 TOTAL 122.35 MEAN .34 MAX 20 MIN 0 AC-FT 243
WTR YR 1972 TOTAL 111.56 MEAN .30 MAX 20 MIN 0 AC-FT 221

11090200 FULLERTON CREEK AT RICHMAN AVENUE, AT FULLERTON, CALIF.

LOCATION.--Lat 33°51'45", long 117°55'55", in NW¼SW¼SE¼ sec.33, T.3 S., R.10 W., Orange County, on right bank 125 ft east of Richman Avenue, at Fullerton.

DRAINAGE AREA.--12.1 sq mi.

PERIOD OF RECORD.--October 1959 to current year.

GAGE.--Water-stage recorder. Datum of gage is 126.4 ft above mean sea level (levels by Orange County Flood Control District).

AVERAGE DISCHARGE.--13 years, 1.84 cfs (1,330 acre-ft per year); median of yearly mean discharges, 1.3 cfs (940 acre-ft per year).

EXTREMES.--Current year: Maximum discharge, 479 cfs Dec. 24 (gage height, 3.84 ft); no flow at times. Period of record: Maximum discharge, 1,100 cfs Jan. 25, 1969 (gage height, 4.78 ft); no flow many days in each year.

REMARKS.--Flow regulated by Fullerton flood-control reservoir (capacity, 706 acre-ft). No diversion above station. See schematic diagram of San Gabriel and Los Angeles River basins.

COOPERATION.--Records furnished by Orange County Flood Control District and reviewed by Geological Survey.

DISCHARGE, IN CUBIC FEET PER SECOND, WATER YEAR OCTOBER 1971 TO SEPTEMBER 1972

DAY	OCT	NOV	DEC	JAN	FEB	MAR	APR	MAY	JUN	JUL	AUG	SEP
1	.10	.10	0	.90	.10	.20	.30	.20	.20	0	.10	0
2	.10	.10	.40	.20	0	.20	.20	.20	.10	.10	.10	0
3	.20	.10	1.8	.10	0	.10	.20	.10	.10	.20	.10	1.1
4	.20	.10	.40	0	.10	.20	.20	0	.10	.10	.10	.10
5	.20	.20	0	0	.20	.10	.20	.10	.10	.10	.10	.10
6	.20	.10	0	0	.20	.10	.10	.10	.20	.20	.10	.20
7	.20	.10	0	0	.10	.10	.30	.10	7.9	.20	.20	.10
8	.20	.10	0	0	.10	.10	.20	.10	.10	.10	.10	.10
9	.20	.10	0	0	.20	.10	.20	.10	2.0	.10	.10	.30
10	.30	.10	0	0	.20	.10	.20	.10	.10	.10	.20	.20
11	.40	.10	0	0	.10	.10	.70	.10	.10	.10	.20	.10
12	.50	3.8	0	0	.20	.10	.10	.10	.30	.10	12	.10
13	.10	0	2.3	0	.20	.10	.10	.20	.20	.10	.10	.10
14	.10	0	0	.10	.20	.10	.10	.10	.10	.20	.20	.10
15	.10	0	.10	.10	.10	.10	.10	.20	.10	.10	.10	.10
16	.20	0	0	.10	.20	.20	.10	.20	.10	.10	.10	.10
17	.10	0	.20	.10	.20	.20	.10	.10	.10	.10	.10	.10
18	.10	0	.10	.10	.10	.20	.30	.10	.10	.10	.20	.10
19	.10	0	.10	.10	.20	.10	7.2	.10	.10	.10	.20	.20
20	.10	.10	.10	0	.20	.10	.20	.20	.10	.10	.10	.10
21	.10	0	.10	0	.20	.10	.20	.10	.10	.10	.20	.20
22	.10	.10	88	.10	.10	.40	.10	.10	.10	.10	.10	.20
23	.10	.10	4.3	0	.10	.40	.10	.30	.10	.10	.10	.10
24	.20	0	93	0	.10	.20	.10	.10	.10	.10	.10	.10
25	.30	0	46	.10	.10	.20	.10	.10	.10	.10	.10	.10
26	.10	0	20	.10	.10	.20	.10	.10	.10	.10	.10	.10
27	.10	0	94	0	.10	.20	.10	.10	.10	.20	.10	.10
28	.10	.10	34	0	.10	.20	.10	.10	.20	.30	.10	.10
29	.10	0	16	0	.10	.30	.10	.10	.10	.40	.10	.10
30	.10	0	12	0	------	.20	.10	.20	.10	.10	.10	.10
31	.10	------	5.6	.10	------	.20	------	.10	------	.10	.10	------
TOTAL	5.10	5.40	418.50	2.20	3.90	5.20	12.20	3.90	13.30	4.00	15.70	4.50
MEAN	.16	.18	13.5	.071	.13	.17	.41	.13	.44	.13	.51	.15
MAX	.50	3.8	94	.90	.20	.40	7.2	.30	7.9	.40	12	1.1
MIN	.10	0	0	0	0	.10	.10	0	.10	0	.10	0
AC-FT	10	11	830	4.4	7.7	10	24	7.7	26	7.9	31	8.9

CAL YR 1971 TOTAL 531.80 MEAN 1.46 MAX 94 MIN 0 AC-FT 1,050
WTR YR 1972 TOTAL 493.90 MEAN 1.35 MAX 94 MIN 0 AC-FT 980

11090700 COYOTE CREEK AT LOS ALAMITOS, CALIF.

LOCATION.--Lat 33°48'38", long 118°04'28", in NW¼NE¼SW¼ sec.19, T.4 S., R.11 W., Orange County, on right bank about 250 ft downstream from Spring Street, 0.5 mile northwest of Los Alamitos.

DRAINAGE AREA.--136 sq mi.

PERIOD OF RECORD.--October 1963 to current year.

GAGE.--Water-stage recorder. Datum of gage is 7.37 ft above mean sea level (levels by Los Angeles County Flood Control District).

AVERAGE DISCHARGE.--9 years, 32.7 cfs (23,690 acre-ft per year).

EXTREMES.--Current year: Maximum discharge, 6,620 cfs Dec. 27 (gage height, 4.90 ft); minimum daily, 2.3 cfs June 25.
Period of record: Maximum discharge, 11,300 cfs Jan. 20, 1969 (gage height, 6.38 ft); no flow Jan. 25, Feb. 15-17, 1964.

REMARKS.--Records poor. Flows up to 100 cfs can be diverted from present Carbon Creek channel to Coyote Creek through the original Carbon Creek channel. Flow partially regulated by Carbon Canyon, Brea and Fullerton flood-control reservoirs (combined capacity, 11,840 acre-ft). AVERAGE DISCHARGE represents flow to ocean during period of record, regardless of upstream development. See schematic diagram of San Gabriel and Los Angeles River basins.

COOPERATION.--Records furnished by Los Angeles County Flood Control District and reviewed by Geological Survey.

DISCHARGE, IN CUBIC FEET PER SECOND, WATER YEAR OCTOBER 1971 TO SEPTEMBER 1972

DAY	OCT	NOV	DEC	JAN	FEB	MAR	APR	MAY	JUN	JUL	AUG	SEP
1	20	3.7	31	8.8	25	6.8	5.5	8.1	3.0	4.0	13	6.2
2	15	3.7	22	5.5	11	5.5	6.8	8.8	3.2	4.9	7.4	6.4
3	17	3.7	103	8.8	8.1	7.4	5.2	6.2	3.6	5.5	6.8	12
4	37	3.4	99	8.1	7.4	6.2	5.2	7.4	4.0	5.2	6.8	8.4
5	42	5.2	19	5.5	11	8.8	6.2	6.8	4.3	7.4	6.8	6.6
6	37	6.8	8.8	8.8	7.4	8.6	5.2	5.5	5.0	8.1	6.8	6.4
7	22	9.4	12	8.8	10	8.4	4.9	5.2	6.2	7.4	6.8	6.4
8	24	8.8	8.1	8.8	8.1	8.2	4.6	4.9	16	8.8	6.8	6.4
9	19	8.1	12	8.8	6.8	8.0	4.9	4.9	21	8.8	6.8	6.0
10	8.8	7.4	8.1	11	6.2	7.9	4.6	4.9	5.2	11	7.4	6.0
11	9.4	23	17	7.4	6.8	7.7	6.8	4.6	4.0	12	8.6	5.8
12	8.8	117	3.7	10	4.9	7.5	7.4	3.7	4.6	15	17	5.8
13	11	5.2	103	8.8	8.1	7.3	5.2	3.7	4.3	5.5	9.0	5.4
14	15	5.5	12	7.4	5.5	7.1	5.5	3.4	3.4	6.2	6.6	5.2
15	8.8	5.5	15	10	6.8	6.9	4.6	3.4	3.7	6.8	6.4	4.5
16	52	5.2	15	8.8	6.2	6.7	5.2	3.4	4.9	6.2	6.2	4.0
17	44	4.0	24	10	8.8	6.6	6.2	4.0	7.4	6.2	5.8	4.0
18	8.8	5.2	8.1	10	6.8	6.6	19	4.9	5.5	6.8	5.6	4.0
19	5.5	7.4	6.2	5.5	10	6.6	124	5.2	8.1	8.8	5.6	4.0
20	5.2	5.2	8.8	10	8.8	6.6	4.6	36	9.4	13	5.4	4.0
21	5.5	4.6	5.5	8.1	15	6.5	3.1	4.6	6.2	15	5.4	4.0
22	5.5	6.2	851	13	9.4	6.5	3.4	4.0	3.4	17	5.4	4.0
23	6.8	11	39	11	8.8	6.5	3.1	6.2	4.6	17	5.4	4.0
24	118	17	1,770	11	11	6.4	3.7	4.0	4.0	15	5.4	4.0
25	6.2	15	359	11	13	6.4	4.0	4.3	2.3	16	5.4	4.0
26	5.2	16	152	15	11	6.4	4.0	8.1	2.8	16	5.4	4.0
27	4.6	24	1,700	16	9.4	6.3	3.4	4.3	3.4	15	5.4	4.0
28	4.9	13	443	11	11	6.3	6.2	3.8	2.8	13	5.4	4.0
29	4.3	24	34	10	7.4	6.3	7.4	3.4	3.1	11	5.4	4.0
30	3.7	24	16	13	------	6.2	9.4	3.1	3.7	8.8	5.4	4.0
31	2.8	------	9.4	15	------	6.2	------	2.9	------	10	5.4	------
TOTAL	577.8	398.2	5,914.7	304.9	269.7	215.4	289.3	183.7	163.1	311.4	211.0	157.5
MEAN	18.6	13.3	191	9.84	9.30	6.95	9.64	5.93	5.44	10.0	6.81	5.25
MAX	118	117	1,770	16	25	8.8	124	36	21	17	17	12
MIN	2.8	3.4	3.7	5.5	4.9	5.5	3.1	2.9	2.3	4.0	5.4	4.0
AC-FT	1,150	790	11,730	605	535	427	574	364	324	618	419	312

CAL YR 1971 TOTAL 10,831.5 MEAN 29.7 MAX 1,770 MIN 2.8 AC-FT 21,480
WTR YR 1972 TOTAL 8,996.7 MEAN 24.6 MAX 1,770 MIN 2.3 AC-FT 17,840

11092450 LOS ANGELES RIVER AT SEPULVEDA DAM, CALIF.

LOCATION.--Lat 34°09'42", long 118°27'57", in Ex Mission de San Fernando Grant, Los Angeles County, on right bank of outlet channel of Sepulveda Dam, 200 ft upstream from Sepulveda Boulevard in city of Los Angeles, and 1.8 miles southwest of Van Nuys.

DRAINAGE AREA.--158 sq mi.

PERIOD OF RECORD.--January 1929 to February 1938, May 1938 to current year. See WSP 1315-B, 1735 for history of records prior to September 1950.

GAGE.--Water-stage recorder. Datum of gage is 652.7 ft above mean sea level. See WSP 1735 for history of changes prior to Aug. 29, 1953.

AVERAGE DISCHARGE.--42 years (1929-37, 1938-72), 29.4 cfs (21,300 acre-ft per year); median of yearly mean discharges, 22 cfs (15,900 acre-ft per year).

EXTREMES.--Current year: Maximum discharge, 7,580 cfs Dec. 27 (gage height, 7.52 ft); minimum daily, 2.1 cfs Nov. 14.
Period of record: Maximum discharge, 13,800 cfs Jan. 25, 1969 (gage height, 11.42 ft); no flow Sept. 19, 20, 1930.
Flood of Mar. 2, 1938, amounted to 12,000 cfs (estimated).

REMARKS.--Records good. Flow regulated since December 1941 by Sepulveda flood-control reservoir (capacity, 17,400 acre-ft). Some diversion above station. At times city of Los Angeles discharges imported Owens River water into Los Angeles River from upstream distributing reservoirs. No discharges of imported water reported this year. See schematic diagram of San Gabriel and Los Angeles River basins.

COOPERATION.--Records of released water from reservoirs furnished by city of Los Angeles. Seven discharge measurements furnished by Los Angeles County Flood Control District.

DISCHARGE, IN CUBIC FEET PER SECOND, WATER YEAR OCTOBER 1971 TO SEPTEMBER 1972

DAY	OCT	NOV	DEC	JAN	FEB	MAR	APR	MAY	JUN	JUL	AUG	SEP
1	8.3	6.4	7.3	16	7.9	8.9	11	9.0	12	11	13	11
2	8.3	7.4	8.9	16	7.1	9.7	11	7.6	13	8.7	13	11
3	8.5	8.5	13	15	7.0	10	12	7.1	13	8.7	9.1	11
4	8.5	9.1	14	6.0	17	11	11	6.3	13	9.3	8.8	14
5	8.5	9.7	6.9	6.7	96	14	10	7.3	15	8.8	9.4	14
6	8.5	10	7.1	13	11	12	9.2	7.9	18	8.9	10	14
7	8.5	9.7	7.0	9.8	7.4	10	8.9	8.2	13	9.2	9.7	13
8	9.1	8.0	6.3	6.6	7.0	10	9.3	9.0	8.1	9.5	9.8	14
9	9.7	7.9	7.8	6.0	8.5	10	8.7	9.6	6.0	10	10	13
10	9.7	7.9	8.0	6.2	9.5	21	7.8	10	6.6	11	9.0	12
11	9.7	16	8.0	12	12	17	9.0	11	7.8	10	9.1	13
12	9.7	112	7.8	6.2	9.9	9.1	7.2	13	7.9	9.2	21	13
13	8.5	3.4	85	6.0	10	8.4	6.7	9.9	8.8	9.7	12	14
14	9.7	2.1	4.9	5.4	9.5	7.1	6.2	11	7.9	10	6.0	14
15	11	2.4	6.1	6.4	7.9	7.1	7.9	9.8	10	8.1	6.4	14
16	14	3.4	4.0	6.2	7.7	7.9	15	9.5	9.9	8.1	7.5	11
17	15	5.9	24	15	8.8	8.2	12	8.6	11	7.3	7.1	10
18	9.7	6.4	4.9	5.8	10	8.1	6.5	8.5	9.7	7.4	7.7	10
19	9.7	5.0	5.5	5.2	9.5	8.0	8.5	8.6	8.8	6.9	7.4	11
20	9.7	5.4	5.1	5.4	9.8	7.1	7.2	14	9.3	6.9	7.9	9.9
21	10	5.4	5.2	5.6	9.5	6.5	8.3	8.9	8.9	7.1	8.2	10
22	11	6.4	852	5.9	8.9	7.0	9.2	9.3	7.6	7.2	8.5	12
23	11	5.4	95	5.9	8.9	6.8	9.8	11	7.5	8.0	10	11
24	257	6.4	1,870	7.2	11	7.4	15	9.4	7.8	9.8	11	12
25	19	6.9	899	7.7	11	8.7	22	8.6	8.0	8.9	9.4	11
26	5.9	5.9	168	6.9	12	8.9	9.4	9.7	8.4	9.7	10	9.0
27	6.4	6.4	2,040	6.6	12	8.8	9.9	11	9.8	9.5	9.5	9.2
28	4.6	6.9	585	7.4	13	9.1	9.0	11	9.8	13	11	8.6
29	4.2	7.7	42	6.8	11	9.3	9.4	12	11	13	9.6	8.2
30	5.4	7.6	31	6.0	------	9.9	9.8	13	13	11	10	7.9
31	5.9	------	18	7.2	------	11	------	13	------	12	11	------
TOTAL	534.7	311.6	6,846.8	248.1	370.8	298.0	296.9	302.8	300.6	287.9	302.1	345.8
MEAN	17.2	10.4	221	8.00	12.8	9.61	9.90	9.77	10.0	9.29	9.75	11.5
MAX	257	112	2,040	16	96	21	22	14	18	13	21	14
MIN	4.2	2.1	4.0	5.2	7.0	6.5	6.2	6.3	6.0	6.9	6.0	7.9
AC-FT	1,060	618	13,580	492	735	591	589	601	596	571	599	686

CAL YR 1971 TOTAL 16,916.1 MEAN 46.3 MAX 2,040 MIN 2.0 AC-FT 33,550
WTR YR 1972 TOTAL 10,446.1 MEAN 28.5 MAX 2,040 MIN 2.1 AC-FT 20,720

11093000 PACOIMA CREEK NEAR SAN FERNANDO, CALIF.

LOCATION.--Lat 34°20'07", long 118°23'50", in SE¼NE¼ sec.24, T.3 N., R.15 W., Los Angeles County, on right bank 500 ft downstream from Pacoima Dam, 0.3 mile upstream from mouth of canyon, and 4 miles northeast of San Fernando.

DRAINAGE AREA.--28.3 sq mi.

PERIOD OF RECORD.--March to July 1916 (fragmentary), December 1916 to current year.

GAGE.--Water-stage recorder. Flume or weir control since June 1937. Altitude of gage is 1,650 ft (from topographic map). See WSP 1735 for history of changes prior to Feb. 1, 1935.

AVERAGE DISCHARGE.--55 years (1917-72), 9.51 cfs (6,890 acre-ft per year); median of yearly mean discharges, 4.2 cfs (3,000 acre-ft per year).

EXTREMES.--Current year: Maximum discharge, 90 cfs Feb. 11 (gage height, 1.10 ft); no flow Nov. 16 to Jan. 9.
Period of record: Maximum discharge, 2,440 cfs Mar. 3, 1938; no flow for several months in most years.

REMARKS.--Records below 2.0 cfs poor. Flow regulated by Pacoima flood-control reservoir since February 1929 (capacity, 3,841 acre-ft). Flow passing over Pacoima Dam spillway enters creek below station. No diversion above station. See schematic diagram of San Gabriel and Los Angeles River basins.

COOPERATION.--Records furnished by Los Angeles County Flood Control District and reviewed by Geological Survey.

DISCHARGE, IN CUBIC FEET PER SECOND, WATER YEAR OCTOBER 1971 TO SEPTEMBER 1972

DAY	OCT	NOV	DEC	JAN	FEB	MAR	APR	MAY	JUN	JUL	AUG	SEP
1	1.0	.70		0	.30	.30	.30	.30	.30	.30	.30	.20
2	1.0	.70		0	.60	.30	.30	.30	.30	.30	.30	.20
3	1.0	.10		0	1.6	.30	.30	.30	.30	.30	.30	.20
4	1.0	.10		0	2.0	.30	.30	.30	.30	.30	.30	.20
5	1.0	.10		0	2.7	.30	.30	.30	.30	.90	.30	.50
6	1.0	.10		0	2.7	.30	.30	.30	.30	.30	.30	1.0
7	1.0	.10		0	1.4	.30	.30	.30	.30	.30	.30	1.5
8	1.0	.10		0	1.2	.30	.30	.30	.30	.30	.30	2.0
9	1.0	.10		0	1.8	.30	.30	.30	.30	.30	.30	2.0
10	1.0	.10		1.6	2.5	.30	.30	.30	.30	1.1	.30	2.0
11	1.0	.10		3.4	27	.30	.30	.30	.30	.80	.30	1.1
12	1.0	.10		3.4	39	.30	.30	.30	.30	.60	.30	.50
13	1.0	.10		3.5	54	.30	.30	.30	.30	.30	.30	.40
14	1.0	.10		3.6	20	.30	.30	.30	.30	.80	.30	.30
15	1.0	.10		3.6	3.5	.30	.30	.30	.30	1.2	.30	.30
16	1.0	0		3.6	3.1	.30	.30	.30	.30	.30	.20	.30
17	1.0	0		3.6	.50	.30	.30	.30	.30	.30	.20	.30
18	1.0	0		8.6	.50	.30	.30	.30	.30	.30	.20	.30
19	1.0	0		13	.40	.30	.30	.30	.30	.30	.20	.20
20	1.0	0		12	.30	.30	.30	.30	.30	.30	.20	.20
21	1.0	0		9.7	.30	.30	.30	.30	.30	.30	.20	.20
22	1.0	0		7.4	.30	.30	.30	.30	.30	.30	.20	.20
23	1.0	0		7.4	.30	.30	.30	.30	.30	.30	.20	.20
24	1.0	0		3.3	.30	.30	.30	.30	.30	.30	.20	.20
25	1.0	0		9.1	.30	.30	.30	.30	.30	.30	.20	.20
26	1.0	0		16	.30	.30	.30	.30	.30	.30	.20	.20
27	1.0	0		8.8	.30	.30	.30	.30	.30	.30	.20	.20
28	1.0	0		3.2	.30	.30	.30	.30	.50	.30	.20	.20
29	1.0	0		2.0	.30	.30	.30	.30	.50	.30	.90	.20
30	1.0	0		.90	------	.30	.30	.30	.50	.30	.60	.20
31	1.0	------		.30	------	.30	------	.30	------	.30	.20	------
TOTAL	31.0	2.70	0	128.00	167.80	9.30	9.00	9.30	9.60	12.90	8.80	15.70
MEAN	1.00	.090	0	4.13	5.79	.30	.30	.30	.32	.42	.28	.52
MAX	1.0	.70	0	16	54	.30	.30	.30	.50	1.2	.90	2.0
MIN	1.0	0	0	0	.30	.30	.30	.30	.30	.30	.20	.20
AC-FT	61	5.4	0	254	333	18	18	18	19	26	17	31

CAL YR 1971 TOTAL 1,903.60 MEAN 5.22 MAX 59 MIN 0 AC-FT 3,780
WTR YR 1972 TOTAL 404.10 MEAN 1.10 MAX 54 MIN 0 AC-FT 802

NOTE.--No gage-height record Oct. 1 to Jan. 10, Feb. 17 to Sept. 30.

11093490 NORTH FORK MILL CREEK NEAR LA CANADA, CALIF.

LOCATION.--Lat 34°19'03", long 118°08'00", (unsurveyed), Los Angeles County, Angeles National Forest, on right upstream end of culvert on Angeles Forest Highway, 0.2 mile west of Hidden Springs, and 8.8 miles northeast of La Canada.

DRAINAGE AREA.--5.80 sq mi.

PERIOD OF RECORD.--Water years 1960-66 (annual maximum), June 1966 to current year.

GAGE.--Water-stage recorder with rain-gage attachment and crest-stage gage. Altitude of gage is 3,060 ft (from topographic map). Crest-stage gage is at datum 4.66 ft higher.

AVERAGE DISCHARGE.--6 years (1967-72), 2.12 cfs (1,540 acre-ft per year).

EXTREMES.--Current year: Maximum discharge, 8.0 cfs Dec. 24 (gage height, 2.01 ft); no flow many days.
Period of record: Maximum discharge, 1,280 cfs Jan. 25, 1969 (gage height, 17.3 ft, from floodmarks), from rating curve extended above 10 cfs on basis of computations of flow through culvert at gage-heights 4.00, 9.4, and 17.3 ft; no flow at times in most years.

REMARKS.--Records poor. No regulation or diversion above station.

DISCHARGE, IN CUBIC FEET PER SECOND, WATER YEAR OCTOBER 1971 TO SEPTEMBER 1972

DAY	OCT	NOV	DEC	JAN	FEB	MAR	APR	MAY	JUN	JUL	AUG	SEP
1	0	.15	.18	.36	.49	.25	.21	.09	0			
2	0	.15	.18	.36	.49	.36	.21	.07	.02			
3	0	.15	.18	.36	.49	.36	.21	.07	.02			
4	0	.15	.18	.36	.49	.36	.21	.12	0			
5	0	.15	.18	.36	.49	.36	.18	.12	.06			
6	0	.15	.18	.36	.49	.30	.18	.15	.09			
7	0	.15	.18	.36	.49	.30	.18	.12	.02			
8	0	.18	.18	.36	.49	.30	.18	.12	.02			
9	0	.18	.18	.36	.49	.30	.18	.12	.07			
10	0	.15	.18	.36	.42	.30	.18	.09	.06			
11	0	.15	.18	.36	.30	.30	.18	.06	.02			
12	0	.18	.18	.36	.25	.30	.18	.05	0			
13	0	.21	.18	.36	.25	.30	.18	.04	0			
14	0	.18	.18	.36	.25	.30	.18	.04	0			
15	.03	.18	.18	.36	.25	.30	.18	.03	0			
16	.18	.18	.18	.36	.25	.21	.18	.03	0			
17	.15	.18	.18	.36	.25	.18	.18	.03	0			
18	.10	.18	.18	.42	.25	.18	.18	.12	0			
19	.10	.18	.18	.42	.25	.18	.18	.15	0			
20	.10	.18	.18	.42	.25	.18	.18	.18	0			
21	.10	.18	.18	.42	.25	.18	.15	.18	0			
22	.10	.18	.87	.42	.25	.25	.15	.10	0			
23	.10	.18	.18	.42	.25	.30	.15	.09	0			
24	.15	.18	3.3	.42	.25	.25	.12	.09	0			
25	.13	.18	1.6	.49	.25	.25	.12	.21	0			
26	.11	.18	1.0	.49	.25	.25	.12	.15	0			
27	.10	.18	.80	.49	.25	.21	.09	.10	0			
28	.10	.18	.40	.49	.25	.21	.12	.10	0			
29	.09	.18	.36	.49	.25	.21	.12	.04	0			
30	.09	.18	.36	.49	------	.25	.09	.02	0			
31	.12	------	.36	.49	------	.25	------	0	------			------
TOTAL	1.85	5.16	13.01	12.49	9.63	8.23	4.95	2.88	.38	0	0	0
MEAN	.060	.17	.42	.40	.33	.27	.17	.093	.013	0	0	0
MAX	.18	.21	3.3	.49	.49	.36	.21	.21	.09	0	0	0
MIN	0	.15	.18	.36	.25	.18	.09	0	0	0	0	0
AC-FT	3.7	10	26	25	19	16	9.8	5.7	.8	0	0	0
(a)	0	.20	7.1	0	0	0	0	0	0	0	.1	0

CAL YR 1971 TOTAL 191.52 MEAN .52 MAX 3.3 MIN 0 AC-FT 380
WTR YR 1972 TOTAL 58.58 MEAN .16 MAX 3.3 MIN 0 AC-FT 116

a Precipitation, in inches.

11095500 TUJUNGA CREEK NEAR SUNLAND, CALIF.

LOCATION.--Lat 34°18'02", long 118°16'04", in SW¼NW¼SW¼ sec.32, T.3 N., R.13 W., Los Angeles County, on left bank 1,000 ft upstream from Gold Canyon, 2 miles upstream from mouth of canyon, and 4 miles northeast of Sunland.

DRAINAGE AREA.--106 sq mi.

PERIOD OF RECORD.--October 1916 to current year.

GAGE.--Water-stage recorder. Datum of gage is 1,571.80 ft above mean sea level (levels by Los Angeles County Flood Control District). Prior to Oct. 1, 1932, at site 1,000 ft upstream at different datum.

AVERAGE DISCHARGE.--55 years (1917-72), 29.1 cfs (21,080 acre-ft per year); median of yearly mean discharges, 15 cfs (10,900 acre-ft per year).

EXTREMES.--Current year: Maximum discharge, unknown, probably occurred Jan. 4; minimum daily, 0.9 cfs Oct. 23 to Nov. 4.
Period of record: Maximum discharge, 50,000 cfs (estimated) Mar. 2, 1938; minimum, 0.10 cfs at times in some years.

REMARKS.--Records poor. Flow regulated since July 1931 by Big Tujunga flood-control reservoir (capacity, 3,819 acre-ft). Several small diversions above station for irrigation. See schematic diagram of San Gabriel and Los Angeles River basins.

COOPERATION.--Records furnished by Los Angeles County Flood Control District and reviewed by Geological Survey.

DISCHARGE, IN CUBIC FEET PER SECOND, WATER YEAR OCTOBER 1971 TO SEPTEMBER 1972

DAY	OCT	NOV	DEC	JAN	FEB	MAR	APR	MAY	JUN	JUL	AUG	SEP
1	7.9	.90	3.7	8.0	8.8	4.9	3.2	3.5	4.7	4.6	4.0	4.0
2	7.9	.90	3.7	8.0	8.8	4.7	3.2	3.5	4.7	4.6	4.0	4.2
3	7.9	.90	3.7	72	8.8	4.5	3.2	5.1	4.7	4.6	4.0	4.2
4	7.9	.90	3.7	121	8.8	4.4	3.2	5.1	4.7	4.6	4.0	4.2
5	7.9	1.2	3.7	113	8.8	4.3	3.2	5.1	4.7	4.4	3.6	4.2
6	7.9	3.1	3.7	113	8.8	4.2	3.2	5.1	4.7	4.4	3.6	4.2
7	7.9	3.1	3.7	71	8.8	4.2	3.2	5.1	4.7	4.5	3.2	4.2
8	7.9	3.1	3.7	9.7	8.8	4.2	3.3	5.1	4.7	4.6	3.2	4.2
9	7.9	3.1	3.7	9.7	8.8	4.2	3.3	5.1	4.7	4.6	3.2	4.2
10	7.9	3.1	3.7	9.7	8.8	4.1	3.4	5.1	4.7	4.6	3.2	3.6
11	7.9	3.1	3.7	9.7	8.8	4.1	3.4	5.1	4.7	4.6	3.2	3.6
12	7.9	3.1	3.7	9.7	8.8	4.0	3.4	5.0	4.7	4.0	3.2	3.2
13	7.7	3.1	3.7	9.7	8.8	4.0	3.4	4.9	4.7	4.0	4.0	3.2
14	7.7	3.1	3.7	9.6	8.8	3.9	3.5	4.8	4.7	4.0	4.0	3.2
15	7.7	3.1	3.7	9.6	8.8	3.9	3.5	4.7	4.7	4.0	4.0	3.2
16	7.5	3.1	3.7	9.5	8.8	3.8	3.5	4.6	4.6	4.0	4.0	3.2
17	7.5	3.1	3.7	9.5	8.8	3.8	3.5	4.6	4.6	4.0	4.0	3.2
18	7.5	3.1	3.7	9.4	8.8	3.7	3.5	4.6	4.6	4.0	3.6	3.2
19	7.3	3.1	3.7	9.4	8.8	3.7	3.5	4.6	4.6	4.0	3.6	3.2
20	7.3	3.1	3.7	9.3	8.8	3.6	3.5	4.6	4.6	4.0	3.6	3.2
21	7.3	3.0	3.7	9.3	8.8	3.6	3.5	4.6	4.6	4.0	3.6	3.2
22	5.9	3.0	9.0	9.2	8.8	3.5	3.5	4.6	4.6	4.0	3.6	3.2
23	.90	3.0	5.0	9.2	8.8	3.5	3.5	4.6	4.6	3.9	3.6	3.2
24	.90	3.0	58	9.1	8.8	3.5	3.5	4.6	4.6	3.9	4.0	3.2
25	.90	3.0	46	9.1	5.1	3.5	3.5	4.6	4.6	3.9	4.0	4.6
26	.90	3.0	39	9.0	5.1	3.5	3.5	4.6	4.6	3.9	4.0	4.6
27	.90	3.0	22	9.0	5.1	3.4	3.5	4.6	4.6	3.9	4.0	4.2
28	.90	3.0	14	8.9	5.1	3.4	3.5	4.6	4.6	3.9	4.0	4.6
29	.90	3.0	11	8.9	5.1	3.3	3.5	4.6	4.6	3.9	4.0	4.6
30	.90	3.0	19	8.8	------	3.3	3.5	4.6	4.6	3.9	4.0	4.6
31	.90	------	8.0	8.8	------	3.3	------	4.6	------	3.9	4.0	------
TOTAL	176.30	81.30	308.7	729.8	236.7	120.0	102.1	145.9	139.5	129.2	116.0	113.6
MEAN	5.69	2.71	9.96	23.5	8.16	3.87	3.40	4.71	4.65	4.17	3.74	3.79
MAX	7.9	3.1	58	121	8.8	4.9	3.5	5.1	4.7	4.6	4.0	4.6
MIN	.90	.90	3.7	8.0	5.1	3.3	3.2	3.5	4.6	3.9	3.2	3.2
AC-FT	350	161	612	1,450	469	238	203	289	277	256	230	225

CAL YR 1971 TOTAL 5,859.50 MEAN 16.1 MAX 63 MIN .90 AC-FT 11,620
WTR YR 1972 TOTAL 2,399.10 MEAN 6.55 MAX 121 MIN .90 AC-FT 4,760

NOTE.--No gage-height record Oct. 1 to May 16.

11096500 LITTLE TUJUNGA CREEK NEAR SAN FERNANDO, CALIF.

LOCATION.--Lat 34°16'28", long 118°22'18", in Tujunga Grant, Los Angeles County, on downstream side of Foothill Boulevard bridge, 4 miles east of San Fernando.

DRAINAGE AREA.--21.1 sq mi.

PERIOD OF RECORD.--October 1928 to current year. Monthly discharge for April 1931, published in WSP 1315-B.

GAGE.--Water-stage recorder. Concrete control since May 1940. Datum of gage is 1,068.39 ft above mean sea level (levels by Los Angeles County Flood Control District). Prior to Nov. 30, 1964, at datum 0.5 ft lower.

AVERAGE DISCHARGE.--44 years, 2.52 cfs (1,830 acre-ft per year); median of yearly mean discharges, 0.6 cfs (430 acre-ft per year).

EXTREMES.--Current year: Maximum discharge, 762 cfs Dec. 25 (gage height, 5.50 ft); no flow most of year.
Period of record: Maximum discharge, 8,500 cfs (estimated) Mar. 2, 1938; no flow for several months in each year.

REMARKS.--No regulation or diversion above station. See schematic diagram of San Gabriel and Los Angeles River basins.

COOPERATION.--Records furnished by Los Angeles County Flood Control District and reviewed by Geological Survey.

DISCHARGE, IN CUBIC FEET PER SECOND, WATER YEAR OCTOBER 1971 TO SEPTEMBER 1972

DAY	OCT	NOV	DEC	JAN	FEB	MAR	APR	MAY	JUN	JUL	AUG	SEP
1			0									
2			0									
3			0									
4			0									
5			0									
6			0									
7			0									
8			0									
9			0									
10			0									
11			0									
12			0									
13			0									
14			0									
15			0									
16			0									
17			0									
18			0									
19			0									
20			0									
21			0									
22			0									
23			0									
24			2.9									
25			58									
26			18									
27			26									
28			13									
29			2.9									
30			0		------							
31		------	0		------		------		------			------
TOTAL	0	0	120.8	0	0	0	0	0	0	0	0	0
MEAN	0	0	3.90	0	0	0	0	0	0	0	0	0
MAX	0	0	58	0	0	0	0	0	0	0	0	0
MIN	0	0	0	0	0	0	0	0	0	0	0	0
AC-FT	0	0	240	0	0	0	0	0	0	0	0	0

CAL YR 1971 TOTAL 123.50 MEAN .34 MAX 58 MIN 0 AC-FT 245
WTR YR 1972 TOTAL 120.80 MEAN .33 MAX 58 MIN 0 AC-FT 240

11097000 TUJUNGA CREEK BELOW HANSEN DAM, CALIF.

LOCATION.--Lat 34°15'13", long 118°23'17", in Ex Mission San Fernando Grant, Los Angeles County, in city of Los Angeles, on left bank of outlet channel of Hansen Dam, 0.1 mile upstream from Glen Oaks Boulevard, and 3 miles southeast of San Fernando.

DRAINAGE AREA.--153 sq mi.

PERIOD OF RECORD.--May 1932 to February 1938, August 1940 to current year. Monthly discharge only for some periods, published in WSP 1315-B.

GAGE.--Water-stage recorder. Datum of gage is 943.32 ft above mean sea level (Corps of Engineers bench mark). See WSP 1735 for history of changes prior to Oct. 1, 1953.

EXTREMES.--Current year: No flow during year.
Period of record: Maximum discharge, 11,700 cfs Feb. 25, 1969 (gage height, 7.36 ft), from rating curve extended above 5,000 cfs on basis of gate openings at dam; no flow for all or parts of each year.
Maximum discharge since May 1932, 54,000 cfs (estimated) Mar. 2, 1938.

REMARKS.--No flow since June 8, 1971. Flow regulated since July 1931 by Big Tujunga flood-control reservoir (capacity, 4,240 acre-ft) and since September 1940 by Hansen flood-control reservoir (capacity, 29,700 acre-ft). Several small diversions for domestic use and irrigation. Water reported herein is that which passed Hansen Dam. Los Angeles County Flood Control District diverts 0.3 mile upstream from gage to spreading grounds. See schematic diagram of San Gabriel and Los Angeles River basins. Figures for calendar year 1971 are as follows: Total, 9.40 cfs; mean, 0.03 cfs; maximum, 5.4 cfs; minimum, zero; runoff, 19 acre-ft. Diversion, in acre-ft, for December 1971 and January 1972 is 610 and 1,322, respectively.

COOPERATION.--Records of diversion furnished by Los Angeles County Flood Control District.

11097500 LOS ANGELES RIVER AT LOS ANGELES, CALIF.

LOCATION.--Lat 34°04'52", long 118°13'36", (landline location not available), Los Angeles County, on right bank near Figueroa Street, Los Angeles, and 800 ft upstream from Arroyo Seco.

DRAINAGE AREA.--514 sq mi.

PERIOD OF RECORD.--October 1929 to current year.

GAGE.--Water-stage recorder. Datum of gage is 292.58 ft above mean sea level (levels by Los Angeles County Flood Control District). See WSP 1315-B for history of changes prior to Dec. 8, 1939.

AVERAGE DISCHARGE.--43 years, 70.7 cfs (51,220 acre-ft per year); median of yearly mean discharges, 43 cfs (31,200 acre-ft per year).

EXTREMES.--Current year: Maximum discharge, 15,900 cfs Dec. 27 (gage height, 6.40 ft); minimum daily, 5.4 cfs Apr. 23.
Period of record: Maximum discharge, 67,000 cfs Mar. 2, 1938; no flow at times in some years.

REMARKS.--Flow regulated since September 1940 by Hansen flood-control reservoir and since December 1941 by Sepulveda flood-control reservoir (combined capacity, 49,400 acre-ft) and several small flood-control reservoirs. At times city of Los Angeles discharges imported Owens River water into Los Angeles River from upstream distributing reservoirs. Excess treated sewage effluent from Los Angeles Bureau of Sanitation is released to channel about 8 miles upstream. Many diversions above station for domestic use and irrigation. See schematic diagram of San Gabriel and Los Angeles River basins.

COOPERATION.--Records furnished by Los Angeles County Flood Control District and reviewed by Geological Survey.

DISCHARGE, IN CUBIC FEET PER SECOND, WATER YEAR OCTOBER 1971 TO SEPTEMBER 1972

DAY	OCT	NOV	DEC	JAN	FEB	MAR	APR	MAY	JUN	JUL	AUG	SEP
1	16	8.7	13	38	14	14	14	15	20	49	16	13
2	17	11	19	31	14	14	14	22	20	41	10	12
3	19	24	169	38	15	13	19	19	20	42	13	9.8
4	16	20	78	25	13	10	16	18	16	38	8.2	10
5	19	16	45	22	157	9.8	16	18	19	39	7.2	14
6	19	11	28	23	43	16	15	15	41	37	6.2	18
7	23	9.2	22	34	30	15	16	14	71	33	6.7	16
8	18	15	20	18	26	15	14	20	32	20	9.8	11
9	17	16	22	14	22	14	16	13	22	25	10	10
10	19	23	34	14	24	9.8	18	14	18	21	12	7.7
11	28	27	24	16	34	42	12	19	18	23	13	9.2
12	31	265	19	16	42	21	14	19	18	23	289	18
13	30	28	194	16	26	19	14	32	26	27	100	16
14	22	15	36	18	30	14	12	15	23	26	28	11
15	30	16	16	14	24	14	12	24	28	22	22	10
16	39	14	16	14	23	14	12	16	28	18	14	11
17	75	7.4	61	28	23	18	21	13	28	18	14	6.7
18	27	12	39	22	23	22	38	18	25	18	14	7.7
19	32	8.7	34	18	22	26	33	14	27	22	12	13
20	25	7.8	46	18	22	27	26	23	31	25	10	14
21	39	7.8	42	18	22	24	16	32	33	18	12	14
22	46	15	1,830	14	23	23	9.8	22	35	12	14	16
23	47	12	191	15	21	32	5.4	13	24	12	13	15
24	683	16	4,830	14	25	15	9.8	9.8	24	16	16	12
25	154	9.8	1,810	15	18	18	35	13	22	19	18	16
26	30	11	444	21	16	16	38	12	23	8.2	10	16
27	31	13	3,730	27	14	22	13	9.2	30	14	10	14
28	16	12	1,470	18	14	18	15	7.2	35	16	13	16
29	12	15	138	22	14	18	15	12	41	16	19	14
30	12	15	67	14	------	16	12	12	46	9.2	12	10
31	7.8	------	56	14	------	14	------	14	------	9.8	14	------
TOTAL	1,599.8	681.4	15,543	629	794	563.6	521.0	517.2	844	717.2	766.1	381.1
MEAN	51.6	22.7	501	20.3	27.4	18.2	17.4	16.7	28.1	23.1	24.7	12.7
MAX	683	265	4,830	38	157	42	38	32	71	49	289	18
MIN	7.8	7.4	13	14	13	9.8	5.4	7.2	16	8.2	6.2	6.7
AC-FT	3,170	1,350	30,830	1,250	1,570	1,120	1,030	1,030	1,670	1,420	1,520	756

CAL YR 1971 TOTAL 33,315.8 MEAN 91.3 MAX 4,830 MIN 7.4 AC-FT 66,080
WTR YR 1972 TOTAL 23,557.4 MEAN 64.4 MAX 4,830 MIN 5.4 AC-FT 46,730

11098000 ARROYO SECO NEAR PASADENA, CALIF.

LOCATION.--Lat 34°13'20", long 118°10'36", in NW¼NW¼NE¼ sec.31, T.2 N., R.12 W., Los Angeles County, on right bank 1.5 miles upstream from Millard Canyon, and 5.5 miles northwest of Pasadena.

DRAINAGE AREA.--16.0 sq mi.

PERIOD OF RECORD.--December 1910 to current year.

GAGE.--Water-stage recorder. Broad-crested weir since November 1938. Datum of gage is 1,397.88 ft above mean sea level. Prior to Oct. 1, 1916, nonrecording gage at different datum. Oct. 1, 1916, to Oct. 19, 1945, water-stage recorder at datum 4.00 ft lower.

AVERAGE DISCHARGE.--58 years (1913-15, 1916-72), 9.43 cfs (6,830 acre-ft per year); median of yearly mean discharges, 5.0 cfs (3,600 acre-ft per year).

EXTREMES.--Current year: Maximum discharge, 222 cfs Dec. 24 (gage height, 2.84 ft); minimum daily, 0.19 cfs Aug. 18.
Period of record: Maximum discharge, 8,620 cfs Mar. 2, 1938 (gage height, 9.42 ft, present datum), on basis of slope-area measurement of maximum flow; no flow at times in some years.

REMARKS.--Records good. Minor regulation by debris dam 1.5 miles upstream. No diversion above station. See schematic diagram of San Gabriel and Los Angeles River basins.

DISCHARGE, IN CUBIC FEET PER SECOND, WATER YEAR OCTOBER 1971 TO SEPTEMBER 1972

DAY	OCT	NOV	DEC	JAN	FEB	MAR	APR	MAY	JUN	JUL	AUG	SEP
1	.85	1.7	1.9	6.5	2.3	2.1	1.4	.89	.66	.34	.24	.36
2	.85	1.7	1.9	4.2	2.3	2.1	1.4	.90	.66	.35	.24	.36
3	.85	1.5	2.3	4.0	2.3	2.3	1.4	.85	.65	.32	.30	.44
4	.73	1.5	2.2	4.0	2.3	2.2	1.6	.93	.66	.29	.30	.36
5	.73	1.5	2.1	4.0	2.8	2.2	1.5	.94	.65	.28	.24	.36
6	.62	1.3	2.1	4.0	2.8	2.3	1.4	.98	.60	.29	.24	.44
7	.62	1.3	1.9	4.0	2.5	2.7	1.5	.98	.69	.31	.30	.53
8	.62	1.3	1.7	4.1	2.3	2.7	1.4	.98	.85	.30	.30	.53
9	.62	1.3	1.7	4.1	2.1	2.7	1.3	.98	.85	.29	.30	.53
10	.62	1.3	1.8	4.1	2.1	2.5	1.4	.81	.65	.29	.24	.53
11	.62	1.3	1.9	4.1	2.0	2.3	1.5	.79	.58	.28	.24	.44
12	.73	3.0	2.0	4.1	1.9	2.0	1.6	.68	.49	.31	.44	.44
13	.85	2.7	2.3	4.2	1.9	1.8	1.4	.99	.50	.33	.44	.36
14	.85	2.3	2.3	4.2	1.9	1.7	1.4	1.7	.53	.33	.36	.44
15	.85	2.1	2.3	4.2	1.9	1.6	1.3	1.4	.51	.38	.24	.44
16	.98	1.9	2.3	4.2	1.9	1.6	1.2	1.3	.46	.32	.24	.44
17	1.3	1.7	2.1	3.7	1.9	1.5	1.3	1.4	.41	.32	.24	.55
18	1.3	1.7	2.1	3.6	1.9	1.5	1.6	1.5	.39	.37	.19	.60
19	1.3	1.5	2.0	3.6	1.7	1.5	1.9	1.5	.38	.43	.20	.60
20	1.3	1.5	1.9	3.5	1.7	1.6	1.9	1.8	.41	.51	.30	.53
21	1.3	1.5	1.9	3.5	1.7	1.5	1.7	2.2	.54	.44	.30	.44
22	1.3	1.5	9.7	3.3	1.7	1.4	1.5	1.3	.79	.35	.30	.44
23	1.3	1.6	5.0	3.1	1.8	1.5	1.3	.99	.79	.28	.40	.44
24	2.1	1.7	81	2.8	1.9	1.6	1.3	1.1	.70	.26	.40	.56
25	2.1	1.7	49	2.8	1.9	1.6	1.2	1.1	.61	.23	.40	.55
26	1.9	1.7	40	2.7	1.9	1.6	1.1	1.0	.43	.24	.40	.56
27	2.1	1.7	36	2.7	1.9	1.7	1.0	1.6	.30	.24	.30	.53
28	1.9	1.8	25	2.7	2.1	1.6	1.0	.66	.31	.24	.30	.50
29	1.7	1.9	16	2.7	2.1	1.6	.93	.72	.30	.24	.30	.46
30	1.7	1.9	12	2.4	------	1.5	.92	.55	.31	.24	.30	.41
31	1.7	------	9.2	2.3	------	1.4	------	.59	------	.24	.30	------
TOTAL	36.29	51.1	325.6	113.4	59.5	57.9	41.35	34.11	16.66	9.64	9.29	14.17
MEAN	1.17	1.70	10.5	3.66	2.05	1.87	1.38	1.10	.56	.31	.30	.47
MAX	2.1	3.0	81	6.5	2.8	2.7	1.9	2.2	.85	.51	.44	.60
MIN	.62	1.3	1.7	2.3	1.7	1.4	.92	.55	.30	.23	.19	.36
AC-FT	72	101	646	225	118	115	82	68	33	19	18	28

CAL YR 1971 TOTAL 1,609.30 MEAN 4.41 MAX 81 MIN .62 AC-FT 3,190
WTR YR 1972 TOTAL 769.01 MEAN 2.10 MAX 81 MIN .19 AC-FT 1,530

PEAK DISCHARGE (BASE, 150 CFS).--Dec. 24 (1400) 222 cfs (2.84 ft).

11098500 LOS ANGELES RIVER NEAR DOWNEY, CALIF.

LOCATION.--Lat 33°56'58", long 118°10'23", in San Antonio Grant, Los Angeles County, on right bank 400 ft downstream from Firestone Boulevard bridge, 1 mile upstream from Rio Hondo, and 2.5 miles west of Downey.

DRAINAGE AREA.--599 sq mi.

PERIOD OF RECORD.--March 1928 to current year.

GAGE.--Water-stage recorder. Datum of gage is 96.12 ft above mean sea level (levels by Los Angeles County Flood Control District). See WSP 1735 for history of changes prior to Dec. 11, 1956.

AVERAGE DISCHARGE.--44 years, 109 cfs (78,970 acre-ft per year); median of yearly mean discharges, 69 cfs (50,000 acre-ft per year).

EXTREMES.--Current year: Maximum discharge, 27,400 cfs Dec. 24 (gage height, 6.20 ft); minimum daily, 14 cfs Oct. 31.
Period of record: Maximum discharge, 79,700 cfs Mar. 2, 1938, on basis of slope-area measurements; no flow at times in some years.

REMARKS.--Flow regulated since September 1940 by Hansen flood-control reservoir and since December 1941 by Sepulveda flood-control reservoir (combined capacity, 49,400 acre-ft) and several small flood-control reservoirs. City of Los Angeles stores imported Owens River water in San Fernando and Chatsworth Reservoirs and at times discharges imported water into Los Angeles River. Many diversions for domestic use and irrigation above station. See schematic diagram of San Gabriel and Los Angeles River basins.

COOPERATION.--Records furnished by Los Angeles County Flood Control District and reviewed by Geological Survey.

DISCHARGE, IN CUBIC FEET PER SECOND, WATER YEAR OCTOBER 1971 TO SEPTEMBER 1972

DAY	OCT	NOV	DEC	JAN	FEB	MAR	APR	MAY	JUN	JUL	AUG	SEP
1	19	17	16	48	25	30	22	15	22	36	26	25
2	18	17	38	41	24	29	20	21	22	31	24	26
3	21	24	278	46	24	28	27	21	22	28	22	24
4	22	27	59	39	22	26	25	19	20	29	20	21
5	23	23	29	31	182	25	25	21	19	28	17	25
6	24	22	23	31	57	28	22	21	34	29	16	29
7	24	16	22	38	29	22	22	20	80	35	18	25
8	24	17	19	30	28	23	20	26	57	19	24	22
9	23	22	20	26	26	26	22	24	34	17	24	22
10	21	26	26	25	28	23	26	24	31	20	27	16
11	26	37	22	29	35	28	22	28	27	22	30	20
12	26	432	19	29	51	22	22	27	29	24	343	28
13	29	46	205	29	28	20	20	35	36	25	103	29
14	22	22	34	32	39	16	16	22	34	30	23	25
15	22	21	20	27	30	16	18	25	34	27	20	23
16	121	23	19	27	28	19	22	22	32	23	16	22
17	184	18	42	37	30	24	34	20	31	26	16	16
18	59	21	35	38	31	23	48	24	27	30	19	16
19	49	20	25	32	28	32	46	22	27	28	19	19
20	41	18	26	34	27	31	44	27	34	39	16	22
21	41	16	30	31	30	27	34	34	40	36	20	22
22	46	15	2,380	27	35	29	25	32	38	32	24	23
23	48	22	204	28	30	31	20	23	31	26	24	21
24	655	21	6,980	26	37	22	23	22	28	34	24	19
25	398	18	1,950	28	31	22	34	22	27	41	26	21
26	33	15	627	29	27	19	44	22	32	25	20	24
27	29	15	5,570	35	24	24	26	21	38	27	19	29
28	26	15	1,490	26	28	24	23	17	38	31	19	26
29	18	15	222	30	32	24	22	21	38	29	30	26
30	17	15	97	25	------	24	17	18	38	23	22	24
31	14	------	64	22	------	22	------	18	------	24	23	------
TOTAL	2,123	1,036	20,591	976	1,046	759	791	714	1,000	874	1,074	690
MEAN	68.5	34.5	664	31.5	36.1	24.5	26.4	23.0	33.3	28.2	34.6	23.0
MAX	655	432	6,980	48	182	32	48	35	80	41	343	29
MIN	14	15	16	22	22	16	16	15	19	17	16	16
AC-FT	4,210	2,050	40,840	1,940	2,070	1,510	1,570	1,420	1,980	1,730	2,130	1,370

CAL YR 1971 TOTAL 42,942 MEAN 118 MAX 6,980 MIN 14 AC-FT 85,180
WTR YR 1972 TOTAL 31,674 MEAN 86.5 MAX 6,980 MIN 14 AC-FT 62,830

11101250 RIO HONDO ABOVE WHITTIER NARROWS DAM, CALIF.

LOCATION.--Lat 34°03'32", long 118°04'13", in Potrero Grande Grant, Los Angeles County, on right bank 0.3 mile downstream from Garvey Avenue, 0.4 mile downstream from Rubio Wash, and 2.2 miles west of El Monte.

DRAINAGE AREA.--91.2 sq mi.

PERIOD OF RECORD.--February 1956 to current year.

GAGE.--Water-stage recorder. Datum of gage is 217.8 ft above mean sea level.

AVERAGE DISCHARGE.--16 years, 32.5 cfs (23,550 acre-ft per year); median of yearly mean discharges, 16 cfs (11,700 acre-ft per year).

EXTREMES.--Current year: Maximum discharge, 5,480 cfs Dec. 24 (gage height, 4.17 ft); minimum daily, 0.71 cfs Dec. 31.
Period of record: Maximum discharge, 17,700 cfs Jan. 25, 1969 (gage height, 7.23 ft); no flow for some days in most years.

REMARKS.--Records good. Flow regulated by Big Santa Anita, Sawpit, and Eaton flood-control reservoirs (combined capacity, 1,700 acre-ft) and Sierra Madre, Las Flores, and Rubio debris basins. Many diversions above station for domestic use and irrigation. Los Angeles County Flood Control District diverted 697 acre-ft of water from San Gabriel River below Santa Fe Dam to Rio Hondo during current year. See schematic diagram of San Gabriel and Los Angeles River basins.

COOPERATION.--Records of diversion furnished by the Los Angeles County Flood Control District.

DISCHARGE, IN CUBIC FEET PER SECOND, WATER YEAR OCTOBER 1971 TO SEPTEMBER 1972

DAY	OCT	NOV	DEC	JAN	FEB	MAR	APR	MAY	JUN	JUL	AUG	SEP
1	2.5	1.9	2.3	.75	1.5	2.1	2.0	1.7	5.5	3.3	3.9	6.3
2	1.7	1.9	9.9	.73	1.8	2.8	1.2	2.3	2.7	3.1	3.3	2.7
3	1.6	1.9	6.9	.83	1.6	2.9	2.2	1.8	1.9	2.8	3.0	18
4	2.3	1.5	1.9	1.4	1.8	2.5	2.3	1.8	2.5	3.5	2.7	2.8
5	2.9	1.5	1.1	1.2	7.7	2.1	2.6	1.8	23	3.5	3.1	4.1
6	3.4	1.4	1.7	1.2	1.7	2.3	2.1	1.3	3.4	3.1	3.5	4.8
7	4.8	1.4	1.2	1.2	2.0	2.3	1.8	1.2	45	2.8	3.8	2.4
8	4.8	1.2	1.4	1.1	2.0	2.4	1.6	1.7	9.7	2.6	3.3	1.7
9	2.5	1.2	1.4	1.0	2.1	2.9	.98	4.7	3.0	2.1	3.1	3.0
10	2.1	1.2	1.9	1.3	2.5	3.9	1.7	5.9	2.7	2.3	3.4	2.9
11	3.8	4.6	1.2	1.1	3.6	3.4	2.0	4.4	2.3	2.6	3.4	3.1
12	3.8	70	1.2	1.3	2.9	1.8	1.6	5.6	2.6	3.5	114	2.8
13	3.6	2.2	12	1.3	2.7	2.6	1.6	1.8	3.0	3.0	4.1	2.9
14	3.6	3.1	1.5	1.2	2.7	3.1	3.2	1.8	2.7	3.0	2.5	2.9
15	3.6	1.2	1.6	1.2	2.8	3.1	1.9	2.0	3.1	3.0	2.4	3.1
16	60	1.7	1.3	1.1	3.6	3.2	2.4	2.0	3.6	3.4	2.4	2.9
17	2.8	1.7	1.7	1.2	4.5	3.2	2.8	2.1	4.0	3.3	2.4	2.9
18	1.6	1.9	1.6	1.3	2.3	3.0	4.1	2.5	3.6	3.1	2.3	2.8
19	1.2	2.1	1.3	1.1	1.7	1.8	35	2.9	4.0	3.4	2.3	2.1
20	1.1	1.6	1.1	1.2	1.6	1.9	1.2	1.4	4.6	2.7	2.3	2.5
21	1.9	1.1	1.3	1.3	1.7	2.0	1.2	1.0	3.7	2.9	2.2	2.7
22	2.1	1.4	234	1.5	2.3	2.2	1.1	2.2	5.3	2.6	2.5	3.1
23	2.1	1.6	2.8	1.2	2.4	2.0	.94	2.4	3.9	2.2	2.5	1.9
24	5.9	2.1	1,090	1.6	2.6	1.9	1.9	2.0	3.7	2.5	2.4	1.9
25	1.9	1.7	103	1.6	2.6	1.5	1.8	2.5	3.1	2.5	2.4	3.5
26	1.2	1.4	7.7	1.6	1.9	1.3	2.0	2.2	2.9	3.1	2.4	3.1
27	1.7	1.4	493	1.2	1.9	1.5	2.0	2.5	3.1	2.4	2.3	3.8
28	1.6	1.4	29	1.3	2.6	2.0	2.1	1.0	2.9	2.8	2.3	3.3
29	1.1	1.9	2.2	1.4	2.5	1.8	1.9	1.2	3.1	3.4	2.2	2.7
30	1.2	2.3	.94	1.3	------	1.7	1.2	2.9	4.2	3.4	2.0	2.6
31	1.6	------	.71	1.4	------	2.3	------	3.5	------	4.1	2.0	------
TOTAL	136.0	121.5	2,018.85	38.11	73.6	73.5	90.42	74.1	168.8	92.0	196.4	105.3
MEAN	4.39	4.05	65.1	1.23	2.54	2.37	3.01	2.39	5.63	2.97	6.34	3.51
MAX	60	70	1,090	1.6	7.7	3.9	35	5.9	45	4.1	114	18
MIN	1.1	1.1	.71	.73	1.5	1.3	.94	1.0	1.9	2.1	2.0	1.7
AC-FT	270	241	4,000	76	146	146	179	147	335	182	390	209

CAL YR 1971 TOTAL 5,253.89 MEAN 14.4 MAX 1,090 MIN .71 AC-FT 10,420
WTR YR 1972 TOTAL 3,188.58 MEAN 8.71 MAX 1,090 MIN .71 AC-FT 6,320

11101500 RIO HONDO NEAR MONTEBELLO, CALIF.

LOCATION.--Lat 34°02'00", long 118°04'22", in Potrero Grande Grant, Los Angeles County, on right bank 900 ft upstream from Mission bridge, and 2 miles northeast of Montebello.

DRAINAGE AREA.--116 sq mi (excludes area above Santa Fe Dam).

PERIOD OF RECORD.--October 1928 to current year.

GAGE.--Water-stage recorder. Datum of gage is 190.77 ft above mean sea level (levels by Los Angeles County Flood Control District). See WSP 1735 for history of changes prior to Sept. 1962.

AVERAGE DISCHARGE.--29 years (1928-57), 51.5 cfs (37,280 acre-ft per year); median of yearly mean discharges, 36 cfs (26,100 acre-ft per year).

EXTREMES.--Current year: Maximum discharge, 5,650 cfs Dec. 24 (gage height, 9.01 ft); minimum daily, 2.0 cfs Sept. 20.

Period of record: Maximum discharge, 28,000 cfs Mar. 2, 1938 (gage height, 16.69 ft, present datum), from rating curve extended above 9,000 cfs on basis of slope-area measurement and runoff from contributing stream; no flow for some days in 1964-65.

REMARKS.--Flow regulated by Big Santa Anita, Sawpit, and Eaton flood-control reservoirs (combined capacity, 1,700 acre-ft) and Sierra Madre, Las Flores, and Rubio debris basins. Many diversions above station for domestic use and irrigation. At times flow is diverted from San Gabriel River below Santa Fe Dam to Rio Hondo above station. Since 1957, with the exception of 1972, imported Colorado River water has been released to Rio Hondo 1.6 miles above station for ground-water recharge. See schematic diagram of San Gabriel and Los Angeles River basins.

COOPERATION.--Records furnished by Los Angeles County Flood Control District and reviewed by Geological Survey.

DISCHARGE, IN CUBIC FEET PER SECOND, WATER YEAR OCTOBER 1971 TO SEPTEMBER 1972

DAY	OCT	NOV	DEC	JAN	FEB	MAR	APR	MAY	JUN	JUL	AUG	SEP
1	5.0	5.7	5.5	6.0	5.7	4.7	5.0	3.5	3.4	4.1	4.5	3.7
2	4.8	6.6	9.6	5.5	5.1	4.7	5.0	3.6	3.4	4.2	4.5	3.6
3	4.2	5.5	13	5.2	5.1	4.7	4.9	3.6	3.4	4.3	4.3	3.6
4	3.1	5.2	5.7	5.2	5.1	4.8	4.9	3.6	5.0	4.4	4.1	3.5
5	4.6	5.2	4.6	5.0	5.7	4.8	4.9	3.6	4.0	4.4	3.9	3.4
6	4.6	5.0	5.0	5.0	5.5	4.9	4.8	3.6	12	4.6	3.7	3.4
7	5.8	5.0	5.5	5.0	5.5	4.9	4.7	3.6	6.9	4.7	3.5	3.4
8	5.8	5.0	5.2	5.0	5.5	4.9	4.6	3.5	5.0	4.9	3.3	3.5
9	5.7	5.2	5.5	5.0	5.5	4.9	4.5	3.5	4.9	5.1	3.3	3.6
10	5.5	5.7	5.7	4.8	5.3	4.9	4.4	3.5	4.8	5.2	3.3	3.6
11	6.8	8.0	4.8	5.0	5.1	5.0	4.3	3.5	4.7	5.3	3.3	3.7
12	7.4	86	4.6	5.5	4.9	5.0	4.2	3.4	4.6	5.4	68	3.7
13	7.1	11	13	6.0	4.8	5.0	4.2	3.4	4.5	5.2	3.8	3.8
14	7.1	9.9	5.5	5.5	4.7	5.1	4.3	3.4	4.5	5.0	3.8	3.5
15	7.1	7.6	5.5	5.5	4.6	5.1	4.3	3.4	4.4	4.8	3.8	3.3
16	27	6.6	5.0	5.0	4.6	5.0	4.4	3.4	4.4	4.6	3.8	3.0
17	15	5.2	5.0	5.2	4.6	4.9	4.4	3.4	4.4	4.4	3.8	2.8
18	6.6	4.4	4.8	6.0	4.6	4.8	4.5	3.4	4.3	4.3	3.7	2.5
19	5.2	4.4	4.8	6.0	4.6	4.7	10	3.4	4.2	4.2	3.6	2.2
20	5.0	4.8	4.8	6.3	4.6	4.6	4.0	3.4	4.2	4.2	3.5	2.0
21	5.2	4.6	4.8	6.6	4.6	4.5	3.8	3.4	4.2	4.2	3.4	2.2
22	5.2	5.0	406	7.6	4.6	4.4	3.6	3.4	4.1	4.2	3.3	2.4
23	5.7	5.0	11	8.5	4.6	4.5	3.4	3.4	4.0	4.2	3.2	2.6
24	23	5.5	1,520	8.5	4.6	4.6	3.2	3.4	4.0	4.2	3.1	2.8
25	8.5	5.0	280	8.5	4.6	4.7	3.1	3.4	4.0	4.2	3.2	3.0
26	6.6	5.0	30	6.3	4.6	4.8	3.1	3.4	3.9	4.2	3.3	3.2
27	6.0	4.8	855	5.2	4.6	4.9	3.1	3.4	3.8	4.2	3.5	3.4
28	5.5	4.8	145	5.2	4.6	5.0	3.2	3.4	3.8	4.3	3.6	3.5
29	5.0	5.2	7.1	5.5	4.6	5.0	3.3	3.4	3.9	4.3	3.7	3.4
30	5.0	5.5	4.4	5.5	------	5.0	3.4	3.4	4.0	4.4	3.8	3.3
31	5.5	------	6.3	6.3	------	5.0	------	3.4	------	4.4	3.7	------
TOTAL	224.6	252.4	3,392.7	181.4	142.5	149.8	129.5	107.1	136.7	140.1	177.3	95.6
MEAN	7.25	8.41	109	5.85	4.91	4.83	4.32	3.45	4.56	4.52	5.72	3.19
MAX	27	86	1,520	8.5	5.7	5.1	10	3.6	12	5.4	68	3.8
MIN	3.1	4.4	4.4	4.8	4.6	4.4	3.1	3.4	3.4	4.1	3.1	2.0
AC-FT	445	501	6,730	360	283	297	257	212	271	278	352	190

CAL YR 1971 TOTAL 8,026.1 MEAN 22.0 MAX 1,520 MIN 3.1 AC-FT 15,920
WTR YR 1972 TOTAL 5,129.7 MEAN 14.0 MAX 1,520 MIN 2.0 AC-FT 10,170

11102000 MISSION CREEK NEAR MONTEBELLO, CALIF.

LOCATION.--Lat 34°01'45", long 118°04'07", in La Merced Grant, Los Angeles County, on upstream side of right abutment of San Gabriel Boulevard bridge, 2 miles northeast of Montebello.

DRAINAGE AREA.--4.16 sq mi.

PERIOD OF RECORD.--October 1929 to current year. Yearly estimate for 1938, published in WSP 1315-B. Prior to October 1944, published as Rio Hondo Slough near Montebello.

GAGE.--Water-stage recorder. Datum of gage is 188.2 ft above mean sea level. Prior to Nov. 3, 1938, at datum 6.30 ft higher.

AVERAGE DISCHARGE.--43 years, 11.2 cfs (8,110 acre-ft per year); median of yearly mean discharges, 9.3 cfs (6,700 acre-ft per year).

EXTREMES.--Current year: Maximum discharge, 5.5 cfs Dec. 24 (gage height, 6.72 ft); no flow Apr. 20 to Sept. 30.
Period of record: Maximum discharge not determined, occurred Mar. 2, 1938; no flow at times in some years.

REMARKS.--Flow is almost entirely from ground-water seepage. Flow partially regulated above station by Legg Lake. No diversion above station. See schematic diagram of San Gabriel and Los Angeles River basins.

COOPERATION.--Records furnished by Los Angeles County Flood Control District and reviewed by Geological Survey.

DISCHARGE, IN CUBIC FEET PER SECOND, WATER YEAR OCTOBER 1971 TO SEPTEMBER 1972

DAY	OCT	NOV	DEC	JAN	FEB	MAR	APR	MAY	JUN	JUL	AUG	SEP
1	.12	.34	.50	1.5	1.2	1.0	.30					
2	.14	.32	.50	1.5	1.1	1.0	.30					
3	.16	.30	.50	1.5	1.1	1.0	.20					
4	.15	.28	.52	1.5	1.1	.90	.20					
5	.12	.28	.52	1.5	1.2	.90	.20					
6	.12	.26	.52	1.5	1.2	.80	.20					
7	.12	.28	.50	1.4	1.3	.80	.20					
8	.13	.28	.50	1.4	1.3	.80	.20					
9	.13	.28	.56	1.3	1.3	.80	.20					
10	.13	.26	.63	1.3	1.2	.80	.20					
11	.13	.26	.69	1.3	1.1	.80	.20					
12	.13	.28	.75	1.3	1.1	.70	.20					
13	.14	.24	.81	1.3	.98	.70	.10					
14	.18	.24	.90	1.4	.94	.70	.10					
15	.20	.26	.90	1.3	.90	.70	.10					
16	.24	.26	.90	1.4	.90	.70	.10					
17	.28	.26	.94	1.4	1.0	.70	.10					
18	.30	.28	.94	1.4	1.1	.60	.10					
19	.28	.30	.94	1.4	1.2	.60	.10					
20	.30	.32	.94	1.4	1.4	.50	0					
21	.28	.36	.98	1.4	1.5	.50	0					
22	.30	.40	1.1	1.3	1.6	.50	0					
23	.30	.46	1.1	1.3	1.6	.50	0					
24	.32	.54	3.0	1.2	1.6	.50	0					
25	.32	.54	5.2	1.2	1.6	.50	0					
26	.34	.54	4.6	1.2	1.6	.50	0					
27	.34	.54	4.0	1.2	1.5	.50	0					
28	.34	.52	3.8	1.2	1.4	.50	0					
29	.34	.52	3.5	1.2	1.3	.50	0					
30	.36	.52	2.2	1.2	------	.40	0					
31	.36	------	1.8	1.2	------	.40	------		------			------
TOTAL	7.10	10.52	45.24	41.6	36.32	20.80	3.30	0	0	0	0	0
MEAN	.23	.35	1.46	1.34	1.25	.67	.11	0	0	0	0	0
MAX	.36	.54	5.2	1.5	1.6	1.0	.30	0	0	0	0	0
MIN	.12	.24	.50	1.2	.90	.40	0	0	0	0	0	0
AC-FT	14	21	90	83	72	41	6.5	0	0	0	0	0

CAL YR 1971 TOTAL 702.06 MEAN 1.92 MAX 10 MIN 0 AC-FT 1,390
WTR YR 1972 TOTAL 164.88 MEAN .45 MAX 5.2 MIN 0 AC-FT 327

11102300 RIO HONDO BELOW WHITTIER NARROWS DAM, CALIF.

LOCATION.--Lat 34°01'00", long 118°05'15", in Paso de Bartolo Grant, Los Angeles County, on right levee 0.2 mile upstream from Beverly Boulevard, 0.4 mile downstream from axis of Whittier Narrows Dam, and 1.0 mile northeast of Montebello.

DRAINAGE AREA.--124 sq mi.

PERIOD OF RECORD.--October 1966 to current year.

GAGE.--Water-stage recorder. Altitude of gage is 175 ft (from topographic map).

EXTREMES.--Current year: Maximum discharge, 12,600 cfs Dec. 24 (gage height, 7.45 ft); no flow many days. Period of record: Maximum discharge, 38,800 cfs Jan. 25, 1969 (gage height, 13.82 ft), from rating curve extended above 15,000 cfs on basis of gate openings at dam at gage heights 12.32 and 13.82 ft; no flow at times in each year.

REMARKS.--Records good. Flow regulated by Whittier Narrows flood-control reservoir (capacity, 36,160 acre-ft). There are several small flood-control reservoirs (combined capacities, 1,700 acre-ft) and several small debris basins above Whittier Narrows Dam. Many diversions for domestic use and irrigation. At times flow is diverted from San Gabriel River to Rio Hondo from sites below Santa Fe Dam and above Whittier Narrows Dam. See schematic diagram of San Gabriel and Los Angeles River basins.

DISCHARGE, IN CUBIC FEET PER SECOND, WATER YEAR OCTOBER 1971 TO SEPTEMBER 1972

DAY	OCT	NOV	DEC	JAN	FEB	MAR	APR	MAY	JUN	JUL	AUG	SEP
1	57	91	111	22	58	6.4	18	2.3	16	3.1	0	0
2	54	101	88	23	94	14	19	2.3	17	1.8	0	0
3	91	96	52	25	96	14	17	2.3	21	2.3	0	1.7
4	35	96	37	35	83	12	19	2.3	24	2.3	0	.34
5	3.6	101	37	87	37	14	16	2.3	33	2.3	0	.66
6	3.6	106	37	91	31	14	20	2.3	22	2.3	0	1.2
7	3.6	106	39	95	55	16	18	2.3	43	2.3	0	0
8	309	106	94	106	68	16	17	2.3	28	2.3	0	0
9	165	106	103	106	48	16	17	3.9	19	2.3	0	0
10	16	106	116	82	50	16	17	5.2	20	2.3	0	0
11	14	101	117	37	34	16	17	4.5	22	3.3	0	0
12	10	131	95	101	34	16	18	3.6	22	2.3	92	0
13	5.2	36	70	101	34	16	19	3.6	20	2.3	32	0
14	3.6	36	116	102	32	16	21	3.6	20	1.6	16	0
15	3.6	40	106	106	30	16	22	3.6	25	.29	1.9	0
16	2.3	109	96	108	33	19	26	3.6	28	0	1.3	0
17	2.3	121	101	111	31	19	21	6.9	28	0	1.7	0
18	63	126	109	110	32	16	20	19	28	0	2.3	0
19	86	121	113	101	34	16	42	19	28	0	1.3	0
20	86	111	116	101	34	12	20	19	28	0	.30	0
21	86	111	97	101	34	6.8	15	20	28	.09	0	0
22	101	99	387	101	33	16	14	22	32	.59	1.1	0
23	106	111	38	101	34	19	15	21	22	.28	.39	0
24	106	116	1,190	101	37	16	14	21	10	0	0	0
25	34	116	370	100	32	19	14	20	10	0	0	0
26	28	116	62	37	33	19	20	21	8.4	0	0	0
27	28	116	354	30	35	16	17	19	8.4	0	.55	0
28	30	106	154	28	20	16	10	19	7.6	0	0	0
29	34	106	31	28	0	19	2.3	19	5.1	0	.25	0
30	86	111	22	28	------	19	2.3	17	3.6	0	0	0
31	81	------	22	28	------	16	------	15	------	0	.51	------
TOTAL	1,733.8	3,055	4,480	2,333	1,206	482.2	527.6	327.9	627.1	34.05	151.60	3.90
MEAN	55.9	102	145	75.3	41.6	15.6	17.6	10.6	20.9	1.10	4.89	.13
MAX	309	131	1,190	111	96	19	42	22	43	3.3	92	1.7
MIN	2.3	36	22	22	0	6.4	2.3	2.3	3.6	0	0	0
AC-FT	3,440	6,060	8,890	4,630	2,390	956	1,050	650	1,240	68	301	7.7

CAL YR 1971 TOTAL 28,570.80 MEAN 78.3 MAX 1,190 MIN 1.3 AC-FT 56,670
WTR YR 1972 TOTAL 14,962.15 MEAN 40.9 MAX 1,190 MIN 0 AC-FT 29,680

11102500 RIO HONDO NEAR DOWNEY, CALIF.

LOCATION.--Lat 33°56'48", long 118°09'43", in San Antonio Grant, Los Angeles County, on left bank 700 ft upstream from Stewart and Gray Road bridge, 1.0 mile upstream from mouth, and 1.5 miles west of Downey.

DRAINAGE AREA.--143 sq mi (excludes area above Santa Fe Dam).

PERIOD OF RECORD.--March 1928 to current year.

GAGE.--Water-stage recorder. Datum of gage is 91.4 ft above mean sea level (levels by Los Angeles County Flood Control District). Prior to Oct. 31, 1951, at site 700 ft downstream at datum 1.5 ft lower.

EXTREMES.--Current year: Maximum discharge, 11,400 cfs Dec. 24 (gage height, 6.90 ft); minimum daily, 0.04 cfs Dec. 8.
Period of record: Maximum discharge, 46,900 cfs Jan. 25, 1969 (gage height, 15.15 ft); no flow at times in most years.

REMARKS.--Flow regulated since January 1956 by Whittier Narrows flood-control reservoir (capacity, 36,160 acre-ft). There are several small flood-control reservoirs (combined capacity, 1,700 acre-ft) and several debris basins above Whittier Narrows Dam. Many diversions above station for domestic use and irrigation. At times flow is diverted from San Gabriel River below Santa Fe Dam and above Whittier Narrows Dam to Rio Hondo above station. Since 1937 much of the flow in Rio Hondo has been diverted to percolation basin from a site 5.5 miles upstream. See schematic diagram of San Gabriel and Los Angeles River basins.

COOPERATION.--Records furnished by Los Angeles County Flood Control District and reviewed by Geological Survey.

DISCHARGE, IN CUBIC FEET PER SECOND, WATER YEAR OCTOBER 1971 TO SEPTEMBER 1972

DAY	OCT	NOV	DEC	JAN	FEB	MAR	APR	MAY	JUN	JUL	AUG	SEP
1	.45	.45	.26	2.0	2.0	5.1	1.0	1.8	.60	.14	.28	1.0
2	.45	.64	4.6	2.0	2.0	5.1	1.0	2.0	.53	.06	.25	1.0
3	.45	1.0	7.1	2.0	2.0	5.7	.84	2.0	.67	.05	.31	5.4
4	.26	1.0	5.2	1.8	2.0	5.1	.84	2.0	.56	.06	.24	1.1
5	.45	1.2	.26	1.0	2.6	5.7	.84	2.0	.58	.11	.46	1.7
6	.45	1.2	.26	1.8	5.1	4.5	.64	2.0	.99	.10	.42	2.5
7	.64	1.4	.26	2.0	1.8	1.6	.64	2.0	2.4	.06	.49	1.1
8	.45	1.2	.04	2.6	2.0	1.4	.64	1.6	.98	.07	.93	.90
9	.64	1.2	.06	2.0	1.8	1.4	.64	2.0	.53	.08	.84	1.1
10	.26	1.0	.05	2.6	1.8	1.4	1.0	2.0	.25	.10	.64	1.1
11	.26	1.4	.07	2.0	1.8	1.4	1.0	1.7	.29	.07	.45	.95
12	.64	21	.07	2.6	2.0	1.4	.64	1.8	.30	.11	51	.85
13	.84	.45	7.2	3.2	1.8	1.4	.64	1.8	.45	.19	1.0	.54
14	.64	.45	.07	2.6	1.8	1.4	.64	1.4	.32	.16	.64	.80
15	.26	.06	.06	3.2	1.6	1.4	.84	1.4	.41	.19	.64	.89
16	.45	.05	.07	3.2	1.8	1.2	.64	1.1	.32	.12	.84	1.7
17	1.0	.07	.06	4.5	2.0	1.4	.84	1.2	.31	.12	.64	1.3
18	.26	.26	.26	3.9	1.8	1.4	1.2	.94	.25	.07	.84	.93
19	.45	.07	.45	3.9	1.8	1.2	5.1	.57	.17	.11	.64	1.8
20	.45	.26	.45	3.2	2.0	1.4	.45	.53	.40	.35	.64	1.4
21	.45	.26	.45	3.9	2.0	1.4	.64	.61	.40	.60	.64	.42
22	.45	.45	96	3.9	2.0	1.4	.64	.34	.96	.47	.64	.46
23	.84	.64	1.5	3.2	2.0	1.4	.84	.31	.44	.58	.84	.39
24	1.2	.45	1,220	3.2	2.0	1.2	.64	.49	.34	.55	1.0	.37
25	1.0	.45	46	3.2	2.0	1.6	.64	.41	.32	.37	.64	.34
26	.84	.64	11	2.6	2.6	1.4	.64	.55	.38	.28	.84	.30
27	1.0	.64	334	2.6	1.6	1.0	.64	.43	.41	.21	.84	.17
28	.64	.64	36	2.6	1.8	1.0	.64	.33	.52	.31	.64	.20
29	.06	.84	4.5	2.0	3.9	1.2	.84	.28	.60	.32	1.0	.25
30	.07	.45	3.2	2.6	------	1.0	1.8	.30	.49	.38	1.0	.13
31	.26	------	2.6	2.0	------	2.0	------	.80	------	.39	1.2	------
TOTAL	16.56	39.82	1,782.10	83.9	61.4	65.2	28.03	36.69	16.17	6.78	71.47	31.09
MEAN	.53	1.33	57.5	2.71	2.12	2.10	.93	1.18	.54	.22	2.31	1.04
MAX	1.2	21	1,220	4.5	5.1	5.7	5.1	2.0	2.4	.60	51	5.4
MIN	.06	.05	.04	1.0	1.6	1.0	.45	.28	.17	.05	.24	.13
AC-FT	33	79	3,530	166	122	129	56	73	32	13	142	62

CAL YR 1971 TOTAL 2,477.78 MEAN 6.79 MAX 1,220 MIN 0 AC-FT 4,910
WTR YR 1972 TOTAL 2,239.21 MEAN 6.12 MAX 1,220 MIN .04 AC-FT 4,440

11103000 LOS ANGELES RIVER AT LONG BEACH, CALIF.

LOCATION.--Lat 33°49'02", long 118°12'20", in Los Cerritos Grant, Los Angeles County, on right bank 5,000 ft upstream from Willow Street, 3.4 miles north of Long Beach, and 3.7 miles upstream from mouth.

DRAINAGE AREA.--832 sq mi.

PERIOD OF RECORD.--December 1928 to current year.

GAGE.--Water-stage recorder. Datum of gage is 11.91 ft above mean sea level (levels by Los Angeles County Flood Control District). See WSP 1735 for history of changes prior to Jan. 19, 1956.

AVERAGE DISCHARGE.--43 years (1929-72), 165 cfs (119,500 acre-ft per year); median of yearly mean discharges, 106 cfs (76,800 acre-ft per year).

EXTREMES.--Current year: Maximum discharge, 28,700 cfs Dec. 27 (gage height, 8.00 ft); minimum daily, 17 cfs Apr. 23, 24.
Period of record: Maximum discharge, 102,000 cfs Jan. 25, 1969 (gage height, 16.00 ft); no flow at times in 1929-30, 1934.

REMARKS.--Flow regulated since September 1940 by Hansen flood-control reservoir and since December 1941 by Sepulveda flood-control reservoir (combined capacity, 49,400 acre-ft), and several small flood-control reservoirs. City of Los Angeles stores imported Owens River water in San Fernando and Chatsworth reservoirs and at times discharges imported water into Los Angeles River above station. Many diversions above station for domestic use and irrigation. AVERAGE DISCHARGE represents flow to the ocean, regardless of upstream development. See schematic diagram of San Gabriel and Los Angeles River basins.

COOPERATION.--Records furnished by Los Angeles County Flood Control District and reviewed by Geological Survey.

DISCHARGE, IN CUBIC FEET PER SECOND, WATER YEAR OCTOBER 1971 TO SEPTEMBER 1972

DAY	OCT	NOV	DEC	JAN	FEB	MAR	APR	MAY	JUN	JUL	AUG	SEP
1	30	21	25	58	34	39	33	18	36	37	30	37
2	25	24	24	45	32	36	33	25	39	30	33	33
3	25	31	254	53	34	29	33	25	33	27	29	32
4	25	35	129	54	32	24	31	24	27	26	27	30
5	24	31	39	42	210	21	37	26	29	24	29	21
6	33	28	31	44	114	24	35	28	45	28	25	52
7	29	24	29	56	44	27	35	25	105	32	26	39
8	30	24	24	45	38	28	33	29	112	28	30	35
9	36	30	24	40	33	33	32	35	52	28	24	32
10	30	33	30	38	36	26	35	33	39	31	21	27
11	34	37	28	45	41	32	38	35	38	34	24	24
12	38	597	25	49	74	30	38	42	38	38	436	33
13	43	92	287	48	31	25	35	54	34	39	225	37
14	37	32	55	52	42	23	32	35	41	44	47	35
15	38	29	29	43	36	20	32	36	42	40	36	32
16	45	30	26	38	30	21	27	37	43	32	30	30
17	214	26	34	47	30	31	36	33	41	34	29	26
18	41	26	55	50	31	30	53	35	36	42	30	24
19	35	26	29	41	32	38	64	34	35	35	27	32
20	30	24	27	41	30	39	52	41	42	47	20	33
21	33	21	32	40	33	45	29	41	45	42	20	35
22	36	25	2,740	38	40	58	21	38	43	40	24	32
23	38	30	281	35	37	79	17	32	32	27	23	35
24	454	28	8,550	34	45	56	17	32	25	31	23	30
25	457	27	2,260	37	40	40	18	34	24	38	30	32
26	47	22	1,040	39	40	52	30	33	34	24	31	37
27	36	24	6,390	44	36	56	22	32	43	20	30	37
28	32	24	2,060	39	33	33	18	27	40	25	30	35
29	25	25	333	40	40	33	19	27	36	27	48	35
30	24	29	134	35	------	33	18	32	39	26	40	32
31	20	------	83	30	------	33	------	33	------	27	36	------
TOTAL	2,044	1,455	25,107	1,340	1,328	1,094	953	1,011	1,268	1,003	1,513	984
MEAN	65.9	48.5	810	43.2	45.8	35.3	31.8	32.6	42.3	32.4	48.8	32.8
MAX	457	597	8,550	58	210	79	64	54	112	47	436	52
MIN	20	21	24	30	30	20	17	18	24	20	20	21
AC-FT	4,050	2,890	49,800	2,660	2,630	2,170	1,890	2,010	2,520	1,990	3,000	1,950

CAL YR 1971 TOTAL 50,399 MEAN 138 MAX 8,550 MIN 20 AC-FT 99,970
WTR YR 1972 TOTAL 39,100 MEAN 107 MAX 8,550 MIN 17 AC-FT 77,550

11103500 BALLONA CREEK NEAR CULVER CITY, CALIF.

LOCATION.--Lat 33°59'54", long 118°24'05", in La Ballona Grant, Los Angeles County, 500 ft upstream from Sawtelle Boulevard bridge, 1.7 miles south of Culver City, and 4.1 miles upstream from mouth.

DRAINAGE AREA.--89.5 sq mi, excludes that of Sepulveda Creek. Prior to January 1951, 111 sq mi, change due to tributary channel realignment.

PERIOD OF RECORD.--February 1928 to current year (after December 1950, flow of Sepulveda Creek excluded).

GAGE.--Water-stage recorder. Datum of gage is 11.98 ft above mean sea level (levels by Los Angeles County Flood Control District). Prior to May 14, 1936, at site 1 mile downstream at different datum. May 14, 1936, to Oct. 23, 1961, at datum 0.72 ft lower and Oct. 24, 1961, to Aug. 10, 1967, at datum 0.92 ft lower at site 500 ft downstream.

AVERAGE DISCHARGE.--22 years (1928-50), 35.2 cfs (25,480 acre-ft per year); 22 years (1950-72), 43.2 cfs (31,300 acre-ft per year); median of yearly mean discharges, 35 cfs (25,400 acre-ft per year).

EXTREMES.--Current year: Maximum discharge, 11,100 cfs Dec. 24 (gage height, 8.21 ft); minimum daily, 7.6 cfs Nov. 14, Dec. 7, 18, 19.
Period of record: Maximum discharge, 32,500 cfs Nov. 21, 1967 (gage height, 14.89 ft); no flow at times in some years.

REMARKS.--No regulation above station. At times city of Los Angeles discharges imported Owens River water from several distribution reservoirs into the creek above station. Some small pumping diversions above station for irrigation.

COOPERATION.--Records furnished by Los Angeles County Flood Control District and reviewed by Geological Survey.

DISCHARGE, IN CUBIC FEET PER SECOND, WATER YEAR OCTOBER 1971 TO SEPTEMBER 1972

DAY	OCT	NOV	DEC	JAN	FEB	MAR	APR	MAY	JUN	JUL	AUG	SEP
1	11	9.4	16	11	13	12	12	12	12	12	15	13
2	10	10	150	11	12	15	13	11	11	12	14	11
3	10	10	45	11	12	16	13	11	11	12	13	11
4	12	11	27	11	14	13	14	12	11	9.4	16	11
5	12	11	8.2	11	102	12	13	12	12	11	11	13
6	12	10	8.2	11	11	16	12	10	11	11	10	12
7	12	10	7.6	10	10	16	11	8.8	95	12	13	12
8	12	17	8.2	9.4	12	14	11	11	11	11	12	12
9	11	14	9.4	9.4	12	15	10	12	10	10	12	12
10	11	15	10	9.4	11	13	13	11	9.4	11	14	11
11	12	63	9.4	8.8	11	13	13	10	8.2	11	15	15
12	11	208	16	8.8	10	14	12	11	11	11	175	14
13	10	8.2	82	9.4	11	14	12	11	12	11	16	12
14	10	7.6	8.8	8.8	12	16	12	10	14	12	12	9.4
15	8.8	10	8.8	8.8	11	14	12	11	12	11	12	11
16	48	14	9.4	9.4	11	14	12	11	12	13	13	10
17	13	14	9.4	9.4	15	14	14	10	11	14	12	9.4
18	9.4	12	7.6	8.8	12	12	12	10	11	13	12	11
19	8.8	10	7.6	8.8	12	11	62	12	11	12	11	9.4
20	9.4	8.8	9.4	9.4	12	13	11	11	12	12	10	8.8
21	9.4	8.8	10	9.4	12	15	11	8.8	12	12	12	11
22	8.8	11	793	10	16	14	9.4	11	13	10	12	10
23	8.2	11	28	9.4	16	13	9.4	12	11	10	12	8.8
24	78	12	2,620	11	17	11	11	12	10	12	13	8.8
25	9.4	11	487	12	17	11	10	11	10	12	13	12
26	9.4	12	49	12	15	8.8	11	12	11	11	12	11
27	8.8	12	1,900	13	13	11	11	11	12	12	11	12
28	9.4	12	427	12	12	11	11	11	13	12	18	12
29	8.8	17	18	11	11	12	10	11	14	11	25	12
30	8.8	16	12	11	------	11	8.8	11	14	12	20	11
31	8.8	------	11	12	------	13	------	12	------	13	16	------
TOTAL	421.2	595.8	6,813.0	317.4	455	407.8	396.6	340.6	427.6	358.4	582	336.6
MEAN	13.6	19.9	220	10.2	15.7	13.2	13.2	11.0	14.3	11.6	18.8	11.2
MAX	78	208	2,620	13	102	16	62	12	95	14	175	15
MIN	8.2	7.6	7.6	8.8	10	8.8	8.8	8.8	8.2	9.4	10	8.8
AC-FT	835	1,180	13,510	630	902	809	787	676	848	711	1,150	668

CAL YR 1971 TOTAL 13,876.6 MEAN 38.0 MAX 2,620 MIN 7.6 AC-FT 27,520
WTR YR 1972 TOTAL 11,452.0 MEAN 31.3 MAX 2,620 MIN 7.6 AC-FT 22,720

11104000 TOPANGA CREEK NEAR TOPANGA BEACH, CALIF.

LOCATION.--Lat 34°03'52", long 118°35'10", in Boca de Santa Monica Grant, Los Angeles County, on downstream side of right abutment of highway bridge, 1.7 miles north of Topanga Beach.

DRAINAGE AREA.--18.0 sq mi.

PERIOD OF RECORD.--January 1930 to September 1938, October 1939 to current year.

GAGE.--Water-stage recorder. Datum of gage is 265.60 ft above mean sea level (levels by Los Angeles County Flood Control District). Prior to June 5, 1940, at different datum. June 5, 1940, to Dec. 9, 1941, at site 400 ft upstream at different datum.

AVERAGE DISCHARGE.--41 years, 5.62 cfs (4,070 acre-ft per year); median of yearly mean discharges, 1.9 cfs (1,400 acre-ft per year).

EXTREMES.--Current year: Maximum discharge, 588 cfs Dec. 27 (gage height, 5.38 ft); minimum daily, 0.20 cfs many days.
Period of record: Maximum discharge, 12,200 cfs Jan. 25, 1969 (gage height, 13.36 ft), from rating curve extended above 610 cfs on basis of slope-area measurement of maximum flow; no flow at times in some years.

REMARKS.--No regulation or diversion above station.

COOPERATION.--Records furnished by Los Angeles County Flood Control District and reviewed by Geological Survey.

DISCHARGE, IN CUBIC FEET PER SECOND, WATER YEAR OCTOBER 1971 TO SEPTEMBER 1972

DAY	OCT	NOV	DEC	JAN	FEB	MAR	APR	MAY	JUN	JUL	AUG	SEP
1	.40	.80	.40	3.2	.60	.60	1.0	.60	.20	.20	.20	.20
2	.20	.60	1.0	2.0	.80	.40	.60	.60	.20	.20	.20	.20
3	.20	.80	1.6	1.6	.60	.40	.60	.60	.20	.20	.20	.20
4	.20	.60	.80	1.0	.40	.40	.60	.40	.20	.20	.20	.20
5	.20	.60	.60	1.0	1.4	.40	.60	.40	.20	.20	.20	.20
6	.20	.80	.40	1.0	1.0	.40	.60	.40	.20	.20	.20	.20
7	.20	.80	.40	1.0	.80	.40	.40	.20	1.2	.20	.20	.20
8	.20	.80	.40	1.0	.80	.60	.40	.40	.80	.20	.20	.40
9	.20	.80	.60	1.0	.60	.60	.40	.40	.60	.20	.20	.40
10	.20	.80	.60	1.0	.60	.60	.40	.20	.60	.20	.20	.20
11	.20	1.0	.60	1.0	.60	.60	.40	.20	.40	.20	.20	.20
12	.20	1.8	.80	1.0	.60	.80	.40	.20	.20	.20	.20	.20
13	.20	.80	1.6	1.0	.60	.80	.20	.40	.20	.20	.20	.20
14	.40	1.0	.80	1.0	.60	.80	.20	.20	.20	.20	.20	.20
15	.40	.80	.80	1.0	.60	.80	.20	.20	.20	.20	.20	.40
16	.40	.60	.60	.80	.60	.80	.20	.20	.20	.20	.20	.20
17	.40	.40	.80	.80	.60	.80	.20	.20	.20	.20	.20	.80
18	.40	.40	.60	1.0	.60	.80	.20	.40	.20	.20	.20	.40
19	.60	.40	.80	1.0	.60	.80	.40	.40	.20	.20	.20	.20
20	.40	.20	.80	1.0	.60	.80	.20	.40	.20	.20	.20	.20
21	.40	.40	.40	.80	.60	.80	.20	.20	.20	.20	.20	.20
22	.20	.80	5.0	.80	.80	.80	.40	.20	.20	.20	.20	.20
23	.40	.60	1.8	1.0	.80	.80	.20	.20	.20	.20	.20	.20
24	2.0	.40	28	.80	.80	.80	.20	.20	.20	.20	.20	.40
25	1.6	.60	20	.80	.80	.80	.20	.20	.20	.20	.20	.40
26	.60	.60	7.1	.80	.60	.80	.20	.20	.20	.20	.20	.40
27	.60	.80	110	.80	.60	.80	.20	.20	.20	.20	.20	.20
28	.40	.60	40	.80	.60	.80	.40	.20	.20	.20	.20	.20
29	.40	.60	16	.80	.60	.80	.40	.20	.20	.20	.20	.20
30	.60	.40	4.4	.80	------	.60	.60	.20	.20	.20	.20	.20
31	.80	------	3.2	.60	------	.60	------	.20	------	.20	.20	------
TOTAL	13.80	20.60	250.90	32.20	19.80	21.00	11.20	9.20	8.60	6.20	6.20	8.00
MEAN	.45	.69	8.09	1.04	.68	.68	.37	.30	.29	.20	.20	.27
MAX	2.0	1.8	110	3.2	1.4	.80	1.0	.60	1.2	.20	.20	.80
MIN	.20	.20	.40	.60	.40	.40	.20	.20	.20	.20	.20	.20
AC-FT	27	41	498	64	39	42	22	18	17	12	12	16

CAL YR 1971 TOTAL 629.50 MEAN 1.72 MAX 110 MIN 0 AC-FT 1,250
WTR YR 1972 TOTAL 407.70 MEAN 1.11 MAX 110 MIN .20 AC-FT 809

11105500 MALIBU CREEK AT CRATER CAMP, NEAR CALABASAS, CALIF.

LOCATION.--Lat 34°04'40", long 118°42'03", in SW¼ sec.18, T.1 S., R.17 W., Los Angeles County, on right bank 700 ft downstream from Cold Creek, 0.2 mile downstream from Crater Camp, and 6 miles southwest of Calabasas.

DRAINAGE AREA.--105 sq mi.

PERIOD OF RECORD.--January 1931 to current year.

GAGE.--Water-stage recorder. Datum of gage is 432.82 ft above mean sea level (levels by Los Angeles County Flood Control District). Prior to Nov. 16, 1954, at datum 2.31 ft lower.

AVERAGE DISCHARGE.--41 years, 21.5 cfs (15,580 acre-ft per year); median of yearly mean discharges, 6.4 cfs (4,600 acre-ft per year).

EXTREMES.--Current year: Maximum discharge, 2,120 cfs Dec. 27 (gage height, 7.31 ft); minimum daily, 0.90 cfs Sept. 22.
Period of record: Maximum discharge, 33,800 cfs Jan. 25, 1969 (gage height, 21.43 ft), from rating curve extended above 6,000 cfs on basis of slope-area measurements at gage heights 17.27 and 21.43 ft; no flow at times in some years.

REMARKS.--Flow partly regulated by many small recreational reservoirs. Small diversions above station for domestic use.

COOPERATION.--Records furnished by Los Angeles County Flood Control District and reviewed by Geological Survey.

DISCHARGE, IN CUBIC FEET PER SECOND, WATER YEAR OCTOBER 1971 TO SEPTEMBER 1972

DAY	OCT	NOV	DEC	JAN	FEB	MAR	APR	MAY	JUN	JUL	AUG	SEP
1	3.8	4.2	1.4	16	5.1	7.5	2.9	1.7	2.9	2.3	1.5	1.7
2	4.0	4.0	1.5	11	5.1	6.4	3.1	1.5	2.3	2.3	1.7	1.9
3	4.0	2.9	1.7	9.6	6.8	5.6	3.1	1.5	2.3	2.2	2.0	1.9
4	3.6	1.9	1.7	9.6	5.6	5.1	3.1	1.1	2.2	2.0	2.2	1.9
5	3.6	3.3	1.7	8.9	6.6	5.4	3.3	1.4	2.0	1.7	2.0	1.9
6	3.8	2.2	1.4	9.2	7.4	5.4	2.3	1.4	2.0	1.5	2.2	1.9
7	3.3	1.7	1.4	8.5	7.7	5.1	2.2	2.0	2.2	1.9	2.3	1.4
8	2.7	1.7	1.4	7.1	7.1	4.8	2.0	2.2	2.4	2.3	2.3	1.2
9	2.5	1.7	1.5	7.4	6.8	4.4	2.0	3.3	2.6	2.3	2.2	1.2
10	2.5	1.7	1.5	7.7	6.6	4.4	2.3	3.6	3.0	2.5	2.2	1.1
11	2.7	1.7	1.5	6.8	6.4	4.2	2.5	1.9	3.0	2.5	2.3	1.1
12	2.5	2.2	1.9	6.1	5.6	4.4	2.7	1.2	3.2	2.2	2.7	1.1
13	2.2	1.7	5.0	6.1	5.6	4.6	2.7	1.5	3.4	2.2	2.9	1.2
14	4.0	1.5	1.4	6.1	5.8	5.4	2.7	1.5	3.6	2.7	2.7	1.2
15	4.0	1.4	1.2	6.1	5.8	5.4	2.3	1.7	3.8	2.9	2.5	1.2
16	4.0	1.4	1.2	6.1	5.4	5.1	2.3	1.7	4.0	3.1	2.5	1.2
17	3.3	1.4	1.2	6.4	5.4	5.1	3.1	1.9	4.4	4.3	2.5	1.5
18	2.9	1.5	2.2	6.8	6.1	4.4	2.9	1.9	3.3	2.5	2.5	1.9
19	1.7	1.4	2.2	6.4	6.1	4.4	3.2	2.2	2.5	1.7	2.2	2.5
20	3.8	1.4	1.7	6.4	5.6	4.6	2.3	2.3	3.8	1.4	2.0	2.5
21	1.7	1.4	1.5	6.6	4.8	4.2	2.2	2.2	3.8	1.4	1.9	1.1
22	2.7	1.5	15	7.7	5.1	3.8	2.0	2.9	3.8	1.5	1.5	.90
23	3.6	1.5	7.2	6.1	5.4	3.3	2.0	2.5	3.8	1.7	1.4	1.1
24	20	1.5	46	5.8	6.1	3.3	2.2	3.1	3.6	1.7	1.4	1.5
25	4.0	1.4	86	6.4	5.8	3.3	1.5	3.1	2.9	1.7	1.4	2.0
26	4.0	1.4	3.3	6.4	5.8	4.2	1.6	2.5	2.5	1.9	1.4	2.0
27	4.0	1.4	566	6.1	5.6	4.2	2.0	2.0	2.2	1.7	1.4	1.7
28	5.4	1.4	198	5.8	5.1	4.0	2.2	2.5	1.9	1.7	1.5	1.5
29	4.2	1.5	61	5.1	7.4	3.8	1.6	2.5	2.0	1.5	1.7	1.9
30	2.7	1.4	27	5.1	------	3.6	1.7	2.5	2.3	1.5	1.9	2.0
31	4.0	------	21	5.1	------	3.1	------	2.9	------	1.4	2.0	------
TOTAL	121.2	55.3	1,066.7	224.5	173.7	142.5	72.0	66.2	87.7	64.2	62.9	47.20
MEAN	3.91	1.84	34.4	7.24	5.99	4.60	2.40	2.14	2.92	2.07	2.03	1.57
MAX	20	4.2	566	16	7.7	7.5	3.3	3.6	4.4	4.3	2.9	2.5
MIN	1.7	1.4	1.2	5.1	4.8	3.1	1.5	1.1	1.9	1.4	1.4	.90
AC-FT	240	110	2,120	445	345	283	143	131	174	127	125	94

CAL YR 1971 TOTAL 3,691.50 MEAN 10.1 MAX 566 MIN 1.2 AC-FT 7,320
WTR YR 1972 TOTAL 2,184.10 MEAN 5.97 MAX 566 MIN .90 AC-FT 4,330

11105850 ARROYO SIMI NEAR SIMI, CALIF.

LOCATION.--Lat 34°16'41", long 118°47'43", on line between secs.7 and 8, T.2 N., R.18 W., Ventura County, on downstream side of bridge on Los Angeles Avenue, 0.5 mile upstream from Brea Canyon, and 1.1 miles northwest of Simi.

DRAINAGE AREA.--70.6 sq mi.

PERIOD OF RECORD.--October 1933 to September 1951, October 1952 to current year. Monthly discharge, in acre-feet, only for October 1933 to September 1951, October 1952 to October 1968, published in WSP 2128 (corrected).

GAGE.--Water-stage recorder. Datum of gage is 701.00 ft above mean sea level (levels by Ventura County Flood Control District).

EXTREMES.--Current year: Maximum discharge, 1,980 cfs Dec. 27 (gage height, 3.00 ft); no flow many days. Period of record: Maximum discharge, 6,330 cfs Feb. 25, 1969 (gage height, 5.7 ft, from floodmark); no flow most of each year.

REMARKS.--No regulation above station. Pumping from wells for irrigation. Records of suspended-sediment discharge for the current year are published in Part 2 of this report.

COOPERATION.--Records furnished by Ventura County Flood Control District and reviewed by Geological Survey.

DISCHARGE, IN CUBIC FEET PER SECOND, WATER YEAR OCTOBER 1971 TO SEPTEMBER 1972

DAY	OCT	NOV	DEC	JAN	FEB	MAR	APR	MAY	JUN	JUL	AUG	SEP
1	0	0	.02	.05	.02	.02	.02	.02	.02	.02	.02	.02
2	0	0	.02	.05	.02	.02	.02	.02	.02	.02	.02	.02
3	0	0	.02	.02	.02	.02	.02	.02	.02	.02	.02	1.4
4	0	0	.02	.02	.02	.02	.02	.02	.02	.02	.02	.76
5	0	0	.02	.02	.60	.02	.02	.02	.02	.02	.02	2.9
6	0	0	.02	.02	.02	.02	.02	.02	.02	.02	.02	.05
7	0	0	.02	.02	.02	.02	.02	.02	.02	.02	.02	.02
8	0	0	.02	.02	.02	.02	.02	.02	.02	.02	.02	.02
9	0	0	.02	.02	.02	.02	.02	.02	.02	.02	.02	.02
10	.02	0	.02	.02	.02	.02	.02	.02	.02	.02	.02	.02
11	.02	0	.02	.02	.02	.02	.02	.02	.02	.02	.02	.02
12	.01	3.3	.40	.02	.02	.02	.02	.02	.02	.02	.02	.02
13	0	.40	3.1	.02	.02	.02	.02	.02	.02	.02	.02	.02
14	.04	.02	.02	.02	.02	.02	.02	.02	.02	.02	.02	.02
15	.03	.02	.02	.02	.02	.02	.02	.02	.02	.02	.02	.02
16	.02	.02	.02	.02	.02	.02	.02	.02	.02	.02	.02	.02
17	.02	.02	.02	.02	.02	.02	.02	.02	.02	.02	.02	.02
18	.02	.02	.02	.02	.02	.02	.02	.02	.02	.02	.02	.02
19	.02	.02	.02	.02	.02	.02	.02	.02	.02	.02	.02	.02
20	.02	.02	.02	.02	.02	.02	.02	.02	.02	.02	.02	.02
21	0	.02	.02	.02	.02	.02	.02	.02	.02	.02	.02	.02
22	.02	.02	44	.02	.02	.02	.02	.02	.02	.02	.02	.02
23	.02	.02	4.8	.02	.02	.02	.02	.02	.02	.02	.02	.02
24	1.6	.02	138	.02	.02	.02	.02	.02	.02	.02	.02	.02
25	.02	.02	67	.02	.02	.02	.02	.02	.02	.02	.02	.02
26	0	.02	7.7	.02	.02	.02	.02	.02	.02	.02	.02	.02
27	.02	.02	430	.02	.02	.02	.02	.02	.02	.02	.02	.02
28	0	.02	108	.02	.02	.02	.02	.02	.02	.02	.02	.02
29	0	.02	1.6	.02	.02	.02	.02	.02	.02	.02	.02	.02
30	0	.02	.33	.02	------	.02	.02	.02	.02	.02	.02	.02
31	0	------	.05	.02	------	.02	------	.02	------	.02	.02	------
TOTAL	1.90	4.04	805.36	.68	1.16	.62	.60	.62	.60	.62	.62	5.63
MEAN	.061	.13	26.0	.022	.040	.020	.020	.020	.020	.020	.020	.19
MAX	1.6	3.3	430	.05	.60	.02	.02	.02	.02	.02	.02	2.9
MIN	0	0	.02	.02	.02	.02	.02	.02	.02	.02	.02	.02
AC-FT	3.8	8.0	1,600	1.3	2.3	1.2	1.2	1.2	1.2	1.2	1.2	11

CAL YR 1971 TOTAL 1,005.12 MEAN 2.75 MAX 430 MIN 0 AC-FT 1,990
WTR YR 1972 TOTAL 822.45 MEAN 2.25 MAX 430 MIN 0 AC-FT 1,630

PEAK DISCHARGE (BASE, 400 CFS)

DATE	TIME	G.H.	DISCHARGE	DATE	TIME	G.H.	DISCHARGE
12-24	1030	1.90	550	12-27	0800	3.00	1,980
12-25	1800	1.72	404	12-28	0700	1.74	418

11106550 CALLEGUAS CREEK AT CAMARILLO STATE HOSPITAL, CALIF.

LOCATION.--Lat 34°10'46", long 119°02'20", in Guadalasca Grant, Ventura County, on downstream side of county road bridge, 1.0 mile northeast of Camarillo State Hospital, and 1.4 miles downstream from Conejo Creek.

DRAINAGE AREA.--248 sq mi.

PERIOD OF RECORD.--October 1968 to current year.

GAGE.--Water-stage recorder. Datum of gage is 58.42 ft above mean sea level (levels by Ventura County Flood Control District).

EXTREMES.--Current year: Maximum discharge, 5,510 cfs Dec. 27 (gage height, 5.62 ft); no flow at times.
Period of record: Maximum discharge, 16,300 cfs Feb. 25, 1969 (gage height, 8.50 ft); no flow at times in some years.

REMARKS.--No regulation above station. Pumping for irrigation in valley above station. Sustained flow from city of Thousand Oaks reclamation plant. Records of suspended-sediment discharge for the current year are published in Part 2 of this report.

COOPERATION.--Records furnished by Ventura County Flood Control District and reviewed by Geological Survey.

DISCHARGE, IN CUBIC FEET PER SECOND, WATER YEAR OCTOBER 1971 TO SEPTEMBER 1972

DAY	OCT	NOV	DEC	JAN	FEB	MAR	APR	MAY	JUN	JUL	AUG	SEP
1	2.5	5.8	5.0	8.2	9.8	9.0	5.8	1.7	0	3.8	0	2.5
2	2.5	5.8	5.0	7.4	6.6	6.6	7.4	.63	0	.81	0	3.8
3	1.7	5.8	6.6	7.4	9.8	7.4	7.4	2.5	0	.81	0	3.8
4	1.7	5.8	5.8	7.4	9.8	7.4	7.4	.81	0	0	0	3.8
5	1.7	5.8	5.0	7.4	11	6.6	6.6	.81	0	0	0	3.8
6	.80	5.8	5.0	8.2	11	8.2	5.8	0	0	.90	0	5.0
7	3.8	5.8	5.0	9.8	14	5.0	4.6	.36	0	.81	0	3.8
8	3.8	6.6	4.2	9.8	9.0	5.0	3.8	9.0	0	.63	0	5.0
9	3.8	5.8	4.2	11	9.0	5.0	3.0	5.0	0	.81	.27	3.8
10	4.6	4.2	5.0	13	11	6.6	3.8	5.0	0	2.5	0	3.8
11	3.4	5.0	5.0	9.0	9.8	5.0	4.2	3.8	0	4.6	0	6.6
12	4.2	9.0	5.8	5.8	9.8	5.0	5.0	4.6	0	.81	.18	6.6
13	3.4	8.2	9.0	5.8	9.8	6.6	5.0	3.8	0	.45	5.0	5.8
14	3.0	6.6	8.2	6.6	13	5.8	5.0	3.0	0	.45	2.5	5.8
15	3.0	6.6	5.0	6.6	11	5.8	5.0	3.4	4.2	0	1.7	5.8
16	3.0	6.6	4.6	7.4	7.4	6.6	3.8	2.6	3.1	0	0	3.4
17	3.4	5.8	4.6	6.6	5.0	7.4	4.6	2.3	.81	.09	0	5.0
18	3.8	5.0	6.6	6.6	5.0	9.8	5.8	2.1	1.3	.63	.18	5.0
19	3.8	4.6	7.4	7.4	5.0	5.8	6.6	2.1	0	.09	.54	6.6
20	3.4	4.6	7.4	6.6	5.8	5.8	7.4	3.0	.72	.72	.27	5.8
21	3.4	5.8	8.2	6.6	7.4	5.0	3.4	3.4	2.5	1.7	.45	5.8
22	4.2	5.8	87	6.6	6.6	4.6	4.6	2.5	1.3	.63	.54	3.8
23	4.6	4.6	18	6.6	8.2	5.0	6.6	3.4	2.1	.90	.18	4.2
24	13	4.2	377	6.6	11	5.0	5.8	2.5	3.8	1.7	0	4.6
25	15	5.8	174	7.4	8.2	5.0	3.8	1.2	3.4	3.4	0	5.0
26	7.4	4.6	134	7.4	6.6	5.0	3.8	0	2.5	1.3	0	5.0
27	5.8	4.6	1,310	9.0	5.0	5.8	3.8	0	4.2	.63	2.1	2.1
28	5.8	4.6	27[illegible]	8.2	6.6	6.6	5.8	0	4.2	0	1.7	.54
29	4.6	5.8	28	9.0	5.8	6.6	1.7	.20	3.0	0	.90	5.8
30	4.6	7.4	12	7.4	------	7.4	.36	0	6.6	0	2.5	6.6
31	4.6	------	9.8	7.4	------	5.0	------	0	------	0	2.5	------
TOTAL	134.30	172.4	2,551.4	240.2	248.0	191.4	147.66	69.71	43.73	29.17	21.51	138.94
MEAN	4.33	5.75	82.3	7.75	8.55	6.17	4.92	2.25	1.46	.94	.69	4.63
MAX	15	9.0	1,310	13	14	9.8	7.4	9.0	6.6	4.6	5.0	6.6
MIN	.80	4.2	4.2	5.8	5.0	4.6	.36	0	0	0	0	.54
AC-FT	266	342	5,060	476	492	380	293	138	87	58	43	276

CAL YR 1971 TOTAL 3,825.93 MEAN 10.5 MAX 1,310 MIN 0 AC-FT 7,590
WTR YR 1972 TOTAL 3,988.42 MEAN 10.9 MAX 1,310 MIN 0 AC-FT 7,910

PEAK DISCHARGE (BASE, 300 CFS)

DATE	TIME	G.H.	DISCHARGE	DATE	TIME	G.H.	DISCHARGE
12-22	1300	2.74	508	12-27	0800	5.62	5,510
12-24	1430	3.36	1,220	12-28	1030	3.11	1,000
12-25	2245	3.03	900				

11107745 SANTA CLARA RIVER ABOVE RAILROAD STATION, NEAR LANG, CALIF.

LOCATION.--Lat 34°25'52", long 118°21'22", in SE¼SW¼NW¼ sec.16, T.4 N., R.14 W., Los Angeles County, on downstream side of railroad bridge, 1.1 miles east of Lang Railroad station, 1.9 miles downstream from Aqua Dulce Canyon, and 5.2 miles northeast of Solemint.

DRAINAGE AREA.--157 sq mi.

PERIOD OF RECORD.--October 1949 to September 1968, October 1969 to current year. Monthly discharge only for 1950-70 published in 1971 report. Daily discharge available in historical computer files.

GAGE.--Water-stage recorder. Altitude of gage is 1,750 ft (from topographic map). Prior to Apr. 3, 1970, at site 0.4 mile downstream at different datum.

AVERAGE DISCHARGE.--22 years (1949-68, 1969-72), 5.11 cfs (3,700 acre-ft per year); median of yearly mean discharges, 2.3 cfs (1,700 acre-ft per year).

EXTREMES.--Current year: Maximum discharge, 79 cfs Dec. 25 (gage height, 2.58 ft); no flow Aug. 30 to Sept. 30. Period of record: Maximum discharge, 5,910 cfs (estimated) Feb. 25, 1969; no flow Sept. 4-7, 1971, Aug. 30 to Sept. 30, 1972.

REMARKS.--Records poor below 5.0 cfs. No regulation above station. Small diversions for irrigation and recreation.

COOPERATION.--Records furnished by Los Angeles County Flood Control District and reviewed by Geological Survey.

DISCHARGE, IN CUBIC FEET PER SECOND, WATER YEAR OCTOBER 1971 TO SEPTEMBER 1972

DAY	OCT	NOV	DEC	JAN	FEB	MAR	APR	MAY	JUN	JUL	AUG	SEP
1	.10	4.3	3.0	8.2	5.0	3.0	1.4	1.2	.48	.48	.10	
2	.10	4.3	2.4	7.5	5.0	3.0	2.2	1.2	.48	.48	.10	
3	.10	3.0	2.4	6.9	5.0	3.0	2.2	.96	.48	.48	.10	
4	.10	2.4	2.4	6.9	5.0	3.0	1.7	.96	.48	.48	.10	
5	.20	3.0	2.4	6.9	6.2	3.0	1.9	.96	.72	.48	.10	
6	.24	3.0	1.9	5.6	6.2	2.6	1.9	.96	.48	.48	.10	
7	.48	3.0	1.9	5.6	5.6	2.6	1.7	.96	.48	.48	.10	
8	.24	3.0	1.9	5.0	5.0	2.6	1.7	.96	.48	.48	.10	
9	.24	3.0	1.9	5.0	5.0	2.6	1.7	.96	.48	.48	.10	
10	.24	3.0	1.9	5.0	4.3	2.6	1.7	.72	.48	.48	.10	
11	.24	3.0	1.9	5.0	4.3	2.6	1.7	.72	.48	.72	.10	
12	.24	4.3	1.9	5.0	4.3	2.6	1.4	.72	.48	.72	.10	
13	.24	3.7	1.9	5.6	3.7	2.4	1.4	.72	.24	.48	.10	
14	.10	3.7	1.9	5.0	3.7	2.4	1.4	.72	.24	.48	.10	
15	.10	4.3	1.9	5.0	3.0	2.4	1.4	.72	.48	.48	.10	
16	.10	3.7	1.9	5.0	2.4	2.4	1.4	.72	.48	.48	.10	
17	.10	3.7	1.9	5.0	3.7	2.4	1.4	.72	.48	.72	.10	
18	.10	3.7	1.4	4.3	3.7	1.9	1.4	.48	.48	.72	.10	
19	.10	3.7	1.4	5.6	3.7	1.7	1.4	.24	.24	.72	.10	
20	.10	3.0	1.7	5.0	3.7	1.4	1.2	.20	.24	.72	.10	
21	.10	3.0	1.7	5.0	4.3	1.4	1.2	.48	.24	.72	.10	
22	.10	3.7	2.2	5.0	5.0	1.7	1.2	.96	.24	.72	.10	
23	.10	3.7	.24	5.0	4.3	1.4	1.2	1.2	.24	.72	.10	
24	.10	3.7	22	5.0	4.3	1.4	1.2	1.7	.24	.72	.10	
25	.10	3.0	28	5.0	4.3	1.7	1.2	.96	.24	.72	.10	
26	.10	3.0	30	5.0	3.7	1.9	1.2	.72	.24	.48	.10	
27	.96	3.0	32	5.0	3.7	1.7	1.2	.72	.24	.24	.10	
28	1.4	3.0	23	4.3	3.0	1.7	1.2	.72	.24	.24	.10	
29	2.2	3.0	14	5.0	3.0	1.7	1.7	.72	.24	.24	.10	
30	2.4	3.0	9.8	5.0	------	1.2	1.7	.72	.24	.24	0	
31	4.3	------	8.8	5.0	------	.24	------	.72	------	.10	0	------
TOTAL	15.32	100.9	211.64	167.4	124.1	66.24	45.2	25.42	11.28	16.18	2.90	0
MEAN	.49	3.36	6.83	5.40	4.28	2.14	1.51	.82	.38	.52	.094	0
MAX	4.3	4.3	32	8.2	6.2	3.0	2.2	1.7	.72	.72	.10	0
MIN	.10	2.4	.24	4.3	2.4	.24	1.2	.20	.24	.10	0	0
AC-FT	30	200	420	332	246	131	90	50	22	32	5.8	0

CAL YR 1971 TOTAL 1,648.56 MEAN 4.52 MAX 32 MIN 0 AC-FT 3,270
WTR YR 1972 TOTAL 786.58 MEAN 2.15 MAX 32 MIN 0 AC-FT 1,560

11107860 BOUQUET CREEK NEAR SAUGUS, CALIF.

LOCATION.--Lat 34°26'56", long 118°30'22", in NE¼SW¼NE¼ sec.12, T.4 N., R.16 W., Los Angeles County, on left bank 50 ft upstream from Urbandale Avenue bridge, 0.3 mile upstream from Haskell Canyon, and 3.2 miles northeast of Saugus.

DRAINAGE AREA.--51.6 sq mi.

PERIOD OF RECORD.--October 1970 to current year.

GAGE.--Water-stage recorder. Altitude of gage is 1,305 ft (from topographic map).

EXTREMES.--Current year: Maximum discharge, 570 cfs Dec. 25 (gage height, 2.70 ft); no flow for long periods.
Period of record: Maximum discharge, 570 cfs Dec. 25, 1971 (gage height, 2.70 ft); no flow at times in each year.

REMARKS.--Records poor. Partial regulation by Bouquet Reservoir (capacity, 36,500 cfs, principally used as equalizing reservoir to city of Los Angeles aqueduct). Some pumping by wells for irrigation.

COOPERATION.--Records furnished by Los Angeles County Flood Control District and reviewed by Geological Survey.

DISCHARGE, IN CUBIC FEET PER SECOND, WATER YEAR OCTOBER 1971 TO SEPTEMBER 1972

DAY	OCT	NOV	DEC	JAN	FEB	MAR	APR	MAY	JUN	JUL	AUG	SEP
1	3.0	.60	1.0	2.0								
2	3.0	.20	.40	3.2								
3	3.0	.20	1.6	1.8								
4	3.0	1.2	1.2	2.2								
5	2.6	.80	0	1.0								
6	2.6	.20	.80	.40								
7	2.4	.20	.20	.40								
8	2.4	.20	.20	.40								
9	2.0	.20	.20	.40								
10	1.8	.20	.80	.40								
11	1.6	1.4	.60	.40								
12	3.2	20	.20	.40								
13	.60	8.5	.80	.40								
14	.40	5.6	.60	.40								
15	1.0	4.5	.60	.40								
16	1.0	3.8	.40	.40								
17	1.2	3.6	.20	.40								
18	1.4	3.2	.20	.40								
19	1.4	3.2	0	.40								
20	1.2	2.6	0	.20								
21	.40	2.6	0	.20								
22	0	3.0	.42	.20								
23	.40	3.0	.10	.20								
24	2.4	3.2	9.8	.20								
25	4.0	3.2	36	0								
26	3.0	3.0	3.4	0								
27	2.8	2.4	26	0								
28	2.2	2.0	13	0								
29	1.6	2.0	3.4	0								
30	1.6	1.6	2.4	0	------							
31	1.8	------	1.2	0	------		------		------			------
TOTAL	59.00	86.40	105.72	16.80	0	0	0	0	0	0	0	0
MEAN	1.90	2.88	3.41	.54	0	0	0	0	0	0	0	0
MAX	4.0	20	36	3.2	0	0	0	0	0	0	0	0
MIN	0	.20	0	0	0	0	0	0	0	0	0	0
AC-FT	117	171	210	33	0	0	0	0	0	0	0	0

CAL YR 1971 TOTAL 768.32 MEAN 2.11 MAX 36 MIN 0 AC-FT 1,520
WTR YR 1972 TOTAL 267.92 MEAN .73 MAX 36 MIN 0 AC-FT 531

11108145 CASTAIC CREEK NEAR SAUGUS, CALIF.

LOCATION.--Lat 34°25'42", long 118°37'40", in San Francisco Grant, Los Angeles County, on downstream side of bridge on State Highway 126, 0.6 mile upstream from mouth, 4.6 miles southwest of Castaic, and 5.1 miles northwest of Saugus.

DRAINAGE AREA.--202 sq mi.

PERIOD OF RECORD.--December 1945 to current year. Monthly discharge only for 1947-70 published in 1971 report. Daily discharge available in historical computer files.

GAGE.--Water-stage recorder. Datum of gage is 952.05 ft above mean sea level (levels by Los Angeles County Flood Control District).

AVERAGE DISCHARGE.--26 years (1946-72), 11.8 cfs (8,550 acre-ft per year); median of yearly mean discharges, 0.5 cfs (360 acre-ft per year).

EXTREMES.--Current year: Maximum discharge, 38 cfs Dec. 27 (gage height, 4.93 ft); no flow Sept. 22, 23. Period of record: Maximum discharge, 19,300 cfs Feb. 25, 1969, result of slope-area measurement of maximum flow; no flow for all or long periods in each year.

REMARKS.--Records poor below 3.0 cfs. Flow regulated beginning in 1972 by Castaic Reservoir (capacity, 350,000 acre-ft). During current year, 210 acre-ft was released above station.

COOPERATION.--Records furnished by Los Angeles County Flood Control District and reviewed by Geological Survey.

DISCHARGE, IN CUBIC FEET PER SECOND, WATER YEAR OCTOBER 1971 TO SEPTEMBER 1972

DAY	OCT	NOV	DEC	JAN	FEB	MAR	APR	MAY	JUN	JUL	AUG	SEP
1	2.0	3.1	1.6	1.3	2.6	1.6	1.3	1.4	1.3	1.1	1.1	1.4
2	2.0	3.1	1.6	1.1	2.6	1.6	1.1	2.5	1.3	1.3	.90	.72
3	2.0	3.9	1.8	1.3	2.6	2.5	1.4	1.8	.72	1.1	.72	.54
4	2.0	3.9	1.3	1.3	2.6	1.6	1.6	1.6	.36	1.1	.72	.54
5	2.0	3.9	1.3	1.3	2.6	1.3	1.6	1.6	.54	.90	.54	.54
6	4.6	1.4	1.6	1.4	2.6	1.6	1.6	1.1	.72	.72	.72	.54
7	5.2	1.3	3.2	1.6	2.5	1.6	1.4	.72	1.3	.72	.72	.54
8	7.3	1.4	1.4	1.3	2.4	1.6	1.1	1.4	3.2	.72	.90	.36
9	2.5	2.5	1.4	1.1	2.3	1.6	1.1	1.4	14	.72	1.1	.36
10	1.4	5.2	1.5	1.3	2.2	1.3	1.3	1.4	8.7	.90	1.1	.36
11	2.5	4.6	1.5	1.4	2.1	1.3	1.6	1.4	4.6	1.3	1.1	1.1
12	3.2	1.4	1.6	1.4	2.0	1.1	1.6	1.4	1.8	1.4	1.4	1.4
13	1.8	1.1	1.6	1.6	1.9	1.1	1.6	.90	1.1	1.6	1.3	1.6
14	7.3	.90	1.7	1.6	1.8	1.1	1.6	.72	.90	1.8	1.1	2.5
15	6.6	1.3	1.7	1.3	1.7	1.1	.90	.90	1.4	1.8	.90	1.1
16	4.6	1.4	1.8	1.3	1.6	1.3	.72	.90	3.2	2.5	.90	.54
17	4.6	2.5	1.8	1.8	1.8	1.3	1.1	1.1	4.6	2.5	.72	.54
18	5.2	2.5	1.9	2.5	1.8	1.3	1.4	1.4	5.9	2.5	.72	1.1
19	3.9	1.6	1.9	3.7	1.6	1.1	1.3	1.6	7.3	3.2	1.1	1.8
20	3.9	1.1	2.0	3.6	1.3	1.1	1.3	1.1	9.5	3.2	1.1	1.3
21	.18	.72	2.1	3.5	1.6	1.3	.90	1.1	10	3.9	1.1	.36
22	1.3	1.4	2.2	3.4	3.2	1.3	.54	1.1	8.0	9.5	1.1	0
23	3.2	2.5	1.4	3.3	3.2	1.3	.54	1.3	5.2	7.3	1.3	0
24	2.5	2.5	17	3.2	3.2	1.4	.72	1.3	3.9	3.9	1.6	.72
25	2.5	1.4	13	3.1	1.8	1.3	.90	1.3	3.2	2.5	1.1	.18
26	1.4	1.4	5.9	3.0	1.6	1.1	1.1	1.4	2.5	2.5	1.1	1.1
27	1.3	1.6	14	2.9	1.6	1.3	1.6	1.3	2.5	1.6	1.1	.18
28	1.6	1.1	10	2.8	1.8	1.4	1.4	1.1	1.6	1.4	1.4	.18
29	2.5	1.3	4.6	2.7	2.5	1.4	1.4	1.1	1.3	1.3	1.3	.18
30	2.5	1.6	1.6	2.6	------	1.4	.90	1.4	1.1	1.3	1.6	1.8
31	3.1	------	1.4	2.6	------	1.6	------	1.4	------	1.4	1.4	------
TOTAL	96.68	63.62	107.4	66.3	63.1	42.9	36.62	40.14	111.74	67.68	32.96	23.58
MEAN	3.12	2.12	3.46	2.14	2.18	1.38	1.22	1.29	3.72	2.18	1.06	.79
MAX	7.3	5.2	17	3.7	3.2	2.5	1.6	2.5	14	9.5	1.6	2.5
MIN	.18	.72	1.3	1.1	1.3	1.1	.54	.72	.36	.72	.54	0
AC-FT	192	126	213	132	125	85	73	80	222	134	65	47

CAL YR 1971 TOTAL 1,164.80 MEAN 3.19 MAX 17 MIN 0 AC-FT 2,310
WTR YR 1972 TOTAL 752.72 MEAN 2.06 MAX 17 MIN 0 AC-FT 1,490

11108500 SANTA CLARA RIVER AT LOS ANGELES-VENTURA COUNTY LINE, CALIF.

LOCATION.--Lat 34°23'59", long 118°42'14", in San Francisco Grant, Ventura County, on downstream end of old diversion weir on right bank, 0.8 mile west of Los Angeles-Ventura County Line.

DRAINAGE AREA.--644 sq mi.

PERIOD OF RECORD.--October 1952 to current year.

GAGE.--Water-stage recorder. Datum of gage is 794.93 ft above mean sea level.

AVERAGE DISCHARGE.--20 years, 35.5 cfs (25,720 acre-ft per year); median of yearly mean discharges, 10 cfs (7,200 acre-ft per year).

EXTREMES.--Current year: Maximum discharge, 3,410 cfs Dec. 27 (gage height, 6.48 ft); minimum daily, 3.2 cfs July 10.
Period of record: Maximum discharge, 68,800 cfs Jan. 25, 1969 (gage height, 19.01 ft), from rating curve extended above 9,200 cfs of basis of field estimate of maximum flow; no flow at times in some years.

REMARKS.--Records poor. No regulation above station. Base flow affected by pumping from wells along stream for irrigation. Records of water temperatures and suspended-sediment discharge for the current year are published in Part 2 of this report.

DISCHARGE, IN CUBIC FEET PER SECOND, WATER YEAR OCTOBER 1971 TO SEPTEMBER 1972

DAY	OCT	NOV	DEC	JAN	FEB	MAR	APR	MAY	JUN	JUL	AUG	SEP
1	11	15	14	47	31	21	13	11	6.6	12	9.6	11
2	11	21	16	44	30	22	14	10	6.6	12	9.0	12
3	11	21	17	43	33	22	12	9.6	8.3	12	13	11
4	11	22	16	38	32	22	12	10	8.3	15	13	13
5	11	23	13	35	35	21	13	13	6.6	12	12	14
6	12	16	15	38	39	21	14	13	6.6	7.9	9.0	13
7	12	14	11	47	34	21	11	12	4.0	6.6	7.4	12
8	12	17	10	40	34	20	10	12	4.4	7.9	12	13
9	12	17	20	41	27	19	9.0	12	7.9	4.0	9.0	13
10	12	14	25	34	33	18	12	11	13	3.2	10	14
11	12	11	22	35	35	17	16	11	9.0	3.5	7.4	14
12	12	21	20	34	25	16	15	11	10	3.5	8.3	14
13	12	20	18	34	25	15	12	9.6	13	4.9	12	12
14	12	19	16	37	30	15	10	9.6	13	7.0	9.0	11
15	14	18	15	30	39	14	10	9.6	11	9.0	13	12
16	17	19	13	23	35	14	6.2	8.3	11	9.0	16	12
17	14	24	13	33	34	14	26	12	9.0	10	16	10
18	16	27	17	38	35	14	28	14	9.0	14	18	10
19	20	26	14	30	33	14	23	19	7.9	17	17	12
20	21	23	16	31	33	15	22	20	14	20	19	13
21	20	23	14	28	33	16	23	14	19	21	18	11
22	21	25	120	32	31	17	20	12	20	15	16	9.0
23	20	26	107	28	33	21	18	11	20	20	14	8.3
24	24	23	365	30	31	24	19	12	19	16	14	7.9
25	23	20	197	30	25	24	17	12	16	16	15	8.3
26	17	17	199	34	24	23	14	11	13	16	13	7.4
27	14	20	590	30	22	23	14	12	12	14	11	7.0
28	15	19	88	28	22	20	15	13	9.6	14	9.6	6.6
29	14	18	50	32	21	19	17	10	7.4	11	10	7.0
30	16	18	40	37	------	16	12	7.9	9.6	9.6	12	8.3
31	16	------	38	31	------	13	------	7.4	------	7.9	12	------
TOTAL	465	597	2,129	1,072	894	571	457.2	360.0	324.8	351.0	384.3	326.8
MEAN	15.0	19.9	68.7	34.6	30.8	18.4	15.2	11.6	10.8	11.3	12.4	10.9
MAX	24	27	590	47	39	24	28	20	20	21	19	14
MIN	11	11	10	23	21	13	6.2	7.4	4.0	3.2	7.4	6.6
AC-FT	922	1,180	4,220	2,130	1,770	1,130	907	714	644	696	762	648

CAL YR 1971 TOTAL 8,007.6 MEAN 21.9 MAX 590 MIN 7.0 AC-FT 15,880
WTR YR 1972 TOTAL 7,932.1 MEAN 21.7 MAX 590 MIN 3.2 AC-FT 15,730

PEAK DISCHARGE (BASE, 750 CFS)

DATE	TIME	G.H.	DISCHARGE	DATE	TIME	G.H.	DISCHARGE
12-24	1200	4.80	853	12-27	1115	6.48	3,410
12-25	2145	4.77	826				

11109100 PIRU CREEK BELOW THORN MEADOWS, NEAR STAUFFER, CALIF.

LOCATION.--Lat 34°38'21", long 119°05'43", in SW¼NE¼SW¼ sec.3, T.6 N., R.21 W., Ventura County, on right bank 1.3 miles northeast of Thorn Meadows, and 8 miles southwest of Stauffer.

DRAINAGE AREA.--22.5 sq mi.

PERIOD OF RECORD.--October 1971 to September 1972.

GAGE.--Water-stage recorder. Altitude of gage is 4,280 ft (from topographic map).

EXTREMES.--Current year: Maximum discharge, 584 cfs Dec. 25 (gage height, 3.34 ft), from rating curve extended above 8.0 cfs on basis of slope-area measurement of maximum flow; no flow Aug. 15 to Sept. 1, Sept. 4, 6-22.

REMARKS.--Records fair. No regulation or diversion above station.

COOPERATION.--One discharge measurement furnished by Ventura County Flood Control District.

DISCHARGE, IN CUBIC FEET PER SECOND, WATER YEAR OCTOBER 1971 TO SEPTEMBER 1972

DAY	OCT	NOV	DEC	JAN	FEB	MAR	APR	MAY	JUN	JUL	AUG	SEP
1	.02	.05	.04	12	6.1	5.3	1.8	1.1	.34	.01	.01	0
2	.02	.05	.06	11	6.0	5.3	1.8	1.0	.26	.01	.02	.01
3	.02	.05	.09	13	5.9	5.3	1.6	.86	.17	.01	.02	.02
4	.02	.05	.12	11	5.8	5.3	1.6	.86	.15	.01	.02	0
5	.02	.05	.12	10	5.7	5.3	1.6	.72	.84	.01	.04	.01
6	.02	.04	.15	10	5.6	5.3	1.6	.72	.27	.02	.04	0
7	.03	.04	.15	10	5.5	5.3	1.6	.86	.18	.06	.04	0
8	.03	.04	.12	10	5.4	4.9	1.6	.72	.19	.07	.04	0
9	.03	.04	.12	10	5.3	4.5	1.6	.72	.13	.06	.04	0
10	.03	.04	.15	9.5	5.7	3.9	1.6	.72	.12	.06	.03	0
11	.04	.04	.19	9.5	6.1	4.2	1.6	.72	.09	.03	.02	0
12	.04	.04	.19	9.0	6.1	4.2	1.6	.72	.08	.02	.02	0
13	.04	.04	.28	9.0	5.7	4.2	1.5	.72	.09	.03	.02	0
14	.05	.04	.28	8.5	5.3	3.9	1.5	.60	.08	.01	.01	0
15	.05	.04	.28	8.5	5.3	3.9	1.5	.60	.06	.01	0	0
16	.05	.04	.34	8.0	5.3	3.9	1.4	.72	.05	.02	0	0
17	.05	.04	.34	8.0	5.3	3.6	1.3	1.0	.06	.04	0	0
18	.05	.04	.42	8.0	5.3	3.3	1.3	.86	.07	.05	0	0
19	.05	.04	.42	8.0	5.3	3.0	1.3	.72	.05	.01	0	0
20	.05	.04	.42	8.0	5.3	2.7	1.3	.72	.05	.02	0	0
21	.05	.04	.42	8.0	5.3	2.2	1.3	.72	.05	.02	0	0
22	.05	.04	21	7.5	5.3	2.0	1.3	.72	.06	.02	0	0
23	.05	.04	30	7.5	5.3	2.0	1.1	.60	.05	.01	0	.02
24	.05	.04	213	7.5	5.3	2.0	1.1	.60	.05	.01	0	.02
25	.05	.04	176	7.5	5.3	2.0	1.1	.58	.04	.01	0	.02
26	.05	.04	100	7.0	5.3	2.0	1.1	.43	.03	.01	0	.02
27	.05	.04	89	6.9	5.3	2.0	1.1	.42	.03	.02	0	.02
28	.05	.04	35	6.7	5.3	2.0	1.1	.41	.02	.02	0	.02
29	.05	.04	19	6.5	5.3	2.0	1.1	.30	.02	.02	0	.02
30	.05	.04	17	6.3	------	1.8	1.1	.25	.01	.02	0	.02
31	.05	------	15	6.1	------	1.8	------	.28	------	.01	0	------
TOTAL	1.26	1.25	719.70	268.5	159.7	109.1	42.1	20.97	3.69	.73	.37	.20
MEAN	.041	.042	23.2	8.66	5.51	3.52	1.40	.68	.12	.024	.012	.007
MAX	.05	.05	213	13	6.1	5.3	1.8	1.1	.84	.07	.04	.02
MIN	.02	.04	.04	6.1	5.3	1.8	1.1	.25	.01	.01	0	0
AC-FT	2.5	2.5	1,430	533	317	216	84	42	7.3	1.4	.7	.4

WTR YR 1972 TOTAL 1,327.57 MEAN 3.63 MAX 213 MIN 0 AC-FT 2,630

PEAK DISCHARGE (BASE, 50 CFS).--Dec. 25 (1600) 584 cfs (3.34 ft).

11109200 MIDDLE FORK LOCKWOOD CREEK NEAR STAUFFER, CALIF.

LOCATION.--Lat 34°45'56", long 119°07'12", in SW¼NE¼SE¼ sec.20, T.8 N., R.21 W., Ventura County, on right bank 3.3 miles upstream from Lockwood Creek, and 3.3 miles northwest of Stauffer.

DRAINAGE AREA.--5.50 sq mi.

PERIOD OF RECORD.--October 1971 to September 1972.

GAGE.--Water-stage recorder. Altitude of gage is 5,530 ft (from topographic map).

EXTREMES.--Current year: Maximum discharge, 500 cfs June 7 (gage height, 4.60 ft), from rating curve extended above 13 cfs on basis of slope-area measurement of maximum flow; no flow for many days.

REMARKS.--Records fair. No regulation or diversion above station.

DISCHARGE, IN CUBIC FEET PER SECOND, WATER YEAR OCTOBER 1971 TO SEPTEMBER 1972

DAY	OCT	NOV	DEC	JAN	FEB	MAR	APR	MAY	JUN	JUL	AUG	SEP
1		0	.09	.62	.35	.29	.22	.14	.09	.06	0	0
2		.01	.11	.83	.35	.31	.22	.16	.09	.05	0	.01
3		.01	.12	.73	.35	.41	.22	.17	.11	.04	0	.01
4		.01	.12	.54	.35	.57	.22	.17	.09	.03	0	.01
5		.01	.12	.54	.35	.56	.22	.16	.06	.02	0	.01
6		.02	.12	.51	.35	.53	.22	.16	0	.03	0	0
7		.03	.12	.53	.35	.49	.21	.16	30	.04	0	0
8		.03	.12	.48	.35	.42	.21	.16	.13	.05	0	0
9		.04	.12	.48	.35	.41	.21	.15	.17	.04	0	.01
10		.06	.12	.48	.35	.41	.22	.15	.11	.04	0	.01
11		.09	.12	.48	.35	.35	.27	.15	.09	.04	0	0
12		.09	.12	.48	.35	.41	.26	.15	.06	.03	.01	0
13		.09	.12	.48	.35	.48	.26	.14	0	.03	0	0
14		.09	.12	.48	.35	.41	.25	.13	.07	.03	0	0
15		.09	.12	.48	.35	.41	.25	.12	.14	.02	0	0
16		.09	.10	.48	.35	.35	.25	.12	.14	.02	0	0
17		.09	.09	.41	.35	.35	.23	.13	.14	.02	0	0
18		.09	.10	.41	.35	.30	.22	.13	.13	.01	.03	0
19		.09	.11	.35	.35	.30	.22	.16	.12	.01	.01	0
20		.09	.11	.35	.35	.26	.20	.16	.12	.01	.01	0
21		.09	.12	.35	.35	.25	.20	.15	.12	.02	.01	0
22		.09	.41	.41	.35	.28	.20	.15	.15	.02	.01	0
23		.09	.24	.41	.35	.26	.20	.14	.14	.02	.01	0
24		.09	2.1	.41	.35	.25	.20	.12	.11	.02	.01	0
25		.09	2.0	.41	.32	.25	.17	.13	.10	.02	.03	0
26		.10	1.5	.35	.30	.25	.15	.11	.09	.02	.03	0
27		.10	1.1	.35	.26	.21	.15	.11	.08	0	.03	0
28		.10	1.0	.35	.30	.19	.15	.11	.08	0	.03	0
29		.10	.90	.35	.30	.22	.15	.11	.07	0	.01	0
30		.10	.78	.35	------	.22	.15	.09	.07	0	.01	0
31		------	.62	.35	------	.22	------	.09	------	0	.01	------
TOTAL	0	2.07	13.04	14.23	9.88	10.62	6.30	4.28	32.87	.74	.25	.06
MEAN	0	.069	.42	.46	.34	.34	.21	.14	1.10	.024	.008	.002
MAX	0	.10	2.1	.83	.35	.57	.27	.17	30	.06	.03	.01
MIN	0	0	.09	.35	.26	.19	.15	.09	0	0	0	0
AC-FT	0	4.1	26	28	20	21	13	8.5	65	1.5	.5	.1

WTR YR 1972 TOTAL 94.34 MEAN .26 MAX 30 MIN 0 AC-FT 187

PEAK DISCHARGE (BASE, 100 CFS).--June 7 (0530) 500 cfs (4.60 ft).

11109250 LOCKWOOD CREEK AT GORGE, NEAR STAUFFER, CALIF.

LOCATION.--Lat 34°43'57", long 119°02'14", in SE¼SW¼SE¼ sec.31, T.8 N., R.20 W., Ventura County, on right bank 2.1 miles southeast of Stauffer, and 3.8 miles upstream from Piru Creek.

DRAINAGE AREA.--58.7 sq mi.

PERIOD OF RECORD.--October 1971 to September 1972.

GAGE.--Water-stage recorder. Altitude of gage is 4,790 ft (from topographic map).

EXTREMES.--Current year: Maximum discharge, 106 cfs Dec. 25 (gage height, 2.56 ft); minimum daily, 1.8 cfs July 19, Aug. 24.

REMARKS.--Records good except those for period of no gage-height record, which are poor. No regulation or diversion above station; some pumping from wells along stream.

COOPERATION.--Eight discharge measurements furnished by Ventura County Flood Control District.

DISCHARGE, IN CUBIC FEET PER SECOND, WATER YEAR OCTOBER 1971 TO SEPTEMBER 1972

DAY	OCT	NOV	DEC	JAN	FEB	MAR	APR	MAY	JUN	JUL	AUG	SEP
1	2.8	3.5	3.4	3.9	4.1	3.6	3.7	3.6	2.3	2.2	2.2	2.2
2	2.8	3.6	3.4	3.7	4.2	3.7	3.7	3.5	2.3	2.2	2.2	2.2
3	2.8	3.7	3.4	3.9	4.2	3.7	3.7	3.4	2.3	2.2	2.4	2.5
4	2.8	3.6	3.4	3.9	4.3	3.7	3.7	3.2	2.3	2.2	2.4	2.5
5	2.8	3.5	3.3	4.1	4.3	3.7	3.7	3.1	2.3	2.2	2.5	2.6
6	2.8	3.4	3.3	4.1	4.5	3.9	3.7	3.1	2.3	2.2	2.6	2.6
7	2.8	3.3	3.2	4.1	4.5	3.9	3.7	3.0	7.1	2.1	2.5	2.6
8	2.8	3.3	3.1	4.3	4.5	3.9	3.7	2.9	3.7	2.1	2.5	2.6
9	2.8	3.3	3.2	4.3	4.5	3.9	3.7	2.9	2.5	1.9	2.5	2.6
10	2.8	3.3	3.1	4.5	4.5	3.9	3.7	2.9	2.6	2.1	2.6	2.8
11	2.8	3.3	3.1	4.6	4.3	3.8	3.7	2.9	2.6	2.1	2.6	2.8
12	2.8	3.5	3.3	5.0	4.3	3.7	3.6	2.7	2.5	2.1	2.6	2.8
13	2.8	3.4	3.0	5.0	4.3	3.8	3.6	2.7	2.4	2.2	2.4	2.8
14	2.8	3.3	2.9	4.5	4.3	3.7	3.3	2.7	2.5	2.2	2.3	2.8
15	2.8	3.3	3.3	4.7	4.3	3.7	3.3	2.6	2.5	2.2	2.3	3.1
16	2.8	3.3	3.6	4.3	4.1	3.7	3.2	2.6	2.3	2.2	2.2	2.9
17	2.8	3.3	3.7	4.0	4.0	3.7	3.2	2.6	2.3	1.9	2.3	2.8
18	2.8	3.3	3.7	3.8	4.1	3.7	3.3	2.6	2.3	1.9	2.3	2.6
19	2.8	3.3	3.7	4.1	3.9	3.7	3.3	2.6	2.3	1.8	2.3	2.6
20	2.8	3.3	3.6	3.7	3.9	3.7	3.3	2.6	2.3	1.9	2.3	2.6
21	3.0	3.3	3.4	3.7	3.9	3.7	3.3	2.6	2.3	2.1	2.2	2.8
22	3.1	3.3	5.2	4.1	3.9	3.7	3.3	2.6	2.3	2.1	2.2	2.8
23	3.1	3.3	3.9	4.1	3.9	3.7	3.3	2.5	2.3	2.1	2.1	2.8
24	3.1	3.1	27	4.1	3.7	3.7	3.3	2.5	2.2	2.2	1.8	2.8
25	3.3	3.1	28	4.1	3.7	3.7	3.4	2.5	2.2	2.1	1.9	2.9
26	3.2	3.1	16	3.6	3.7	3.7	3.5	2.4	2.2	2.2	2.1	2.9
27	3.2	3.3	7.9	3.9	3.7	3.7	3.5	2.5	2.2	2.2	2.2	2.9
28	3.2	3.1	4.2	3.9	3.7	3.7	3.6	2.5	2.2	2.2	2.2	3.1
29	3.3	3.1	3.3	3.9	3.7	3.7	3.6	2.4	2.2	2.3	2.2	3.1
30	3.4	3.3	3.5	4.1	------	3.7	3.6	2.4	2.2	2.3	2.2	3.1
31	3.5	------	3.9	4.1	------	3.7	------	2.4	------	2.2	2.2	------
TOTAL	91.4	99.8	173.0	128.1	119.0	115.8	105.2	85.5	76.0	65.9	71.3	82.2
MEAN	2.95	3.33	5.58	4.13	4.10	3.74	3.51	2.76	2.53	2.13	2.30	2.74
MAX	3.5	3.7	28	5.0	4.5	3.9	3.7	3.6	7.1	2.3	2.6	3.1
MIN	2.8	3.1	2.9	3.6	3.7	3.6	3.2	2.4	2.2	1.8	1.8	2.2
AC-FT	181	198	343	254	236	230	209	170	151	131	141	163

WTR YR 1972 TOTAL 1,213.2 MEAN 3.31 MAX 28 MIN 1.8 AC-FT 2,410

PEAK DISCHARGE (BASE, 100 CFS).--Dec. 25 (1800) 106 cfs (2.56 ft).

NOTE.--No gage-height record Oct. 1 to Nov. 23.

11109600 PIRU CREEK ABOVE LAKE PIRU, CALIF.

LOCATION.--Lat 34°31'40", long 118°45'21", in SW¼SE¼SW¼ sec.10, T.5 N., R.18 W., Ventura County, on right bank at Blue Point, 1.0 mile downstream from Agua Blanca Creek, 4.6 miles upstream from Santa Felicia Dam, and 8.0 miles northeast of Piru.

DRAINAGE AREA.--372 sq mi.

PERIOD OF RECORD.--October 1955 to current year.

GAGE.--Water-stage recorder. Datum of gage is 1,063.62 ft above mean sea level (levels by Ventura County Flood Control District).

AVERAGE DISCHARGE.--16 years (1955-71), 55.1 cfs (39,920 acre-ft per year); median of yearly mean discharges, 21 cfs (15,200 acre-ft per year).

EXTREMES.--Current year: Maximum discharge, 2,220 cfs Dec. 24 (gage height, 6.46 ft), from rating curve extended above 400 cfs; minimum daily, 0.07 cfs June 9, Aug. 7, 8, Sept. 7, 8.
Period of record: Maximum discharge, 31,200 cfs Feb. 25, 1969 (gage height, 18.6 ft, from floodmark), from rating curve extended above 4,000 cfs on basis of slope-area measurement at gage-height 12.2 ft and inflow-outflow records for Lake Piru; no flow for several months in most years.

REMARKS.--Records good. Flow regulated beginning December 1971 by Pyramid Dam (capacity, 173,500 acre-ft) 15 miles upstream. No diversion above station. Records of chemical analyses for the current year are published in Part 2 of this report.

DISCHARGE, IN CUBIC FEET PER SECOND, WATER YEAR OCTOBER 1971 TO SEPTEMBER 1972

DAY	OCT	NOV	DEC	JAN	FEB	MAR	APR	MAY	JUN	JUL	AUG	SEP
1	3.6	6.5	9.3	88	30	21	210	7.2	3.8	4.3	1.8	.15
2	3.6	5.7	10	66	28	25	195	5.7	5.0	8.6	.28	.11
3	3.8	4.3	11	62	26	25	21	5.7	22	7.9	.46	.10
4	3.6	5.0	15	50	30	25	20	6.5	47	10	.46	.10
5	2.8	5.0	18	48	34	26	22	5.7	1.2	7.9	.46	.10
6	2.6	5.0	18	47	28	28	21	5.7	.36	7.2	.68	.10
7	2.3	7.9	18	46	26	28	18	5.7	.11	3.8	.07	.07
8	2.6	7.2	18	45	26	73	18	4.3	.82	3.3	.07	.07
9	2.1	4.3	14	45	28	112	18	3.8	.07	3.1	.11	.10
10	2.1	5.7	16	45	29	82	20	3.3	3.6	2.8	.56	.10
11	2.3	7.2	18	45	28	48	12	3.1	1.8	3.1	1.2	.10
12	1.6	11	13	45	28	28	12	2.8	2.8	2.6	2.3	.10
13	1.6	9.3	12	44	26	28	22	3.1	3.3	2.1	3.8	.10
14	2.6	7.9	13	44	26	28	19	4.1	.56	1.6	3.8	.10
15	3.6	7.9	12	44	24	26	13	5.0	.36	1.6	2.8	.11
16	4.3	7.9	12	43	26	25	10	5.0	.56	1.2	1.2	.11
17	9.3	7.9	10	42	15	130	11	6.5	.98	.36	.56	.21
18	5.0	7.9	11	41	13	162	12	6.5	2.1	.56	.56	.21
19	5.0	7.9	12	41	19	170	12	9.3	3.8	.68	.46	.15
20	7.2	6.5	12	40	17	146	11	11	4.1	1.2	.36	.11
21	5.0	7.2	12	39	16	146	10	7.2	4.3	20	.36	.11
22	4.1	7.9	58	38	21	150	8.6	6.5	5.0	16	.28	.15
23	3.8	7.9	44	37	21	150	8.6	5.7	8.6	16	.15	.21
24	5.7	7.9	790	36	20	154	9.3	5.7	10	24	.21	.15
25	10	7.9	720	36	21	150	8.6	5.0	11	21	.21	.21
26	9.3	7.9	510	36	20	150	7.9	5.7	12	15	.28	.28
27	8.6	7.2	680	36	20	154	7.9	6.5	5.0	1.6	.28	.28
28	7.2	7.9	312	33	21	166	7.2	6.5	.68	2.6	.28	.36
29	7.9	8.6	170	33	21	166	6.5	3.6	.98	2.3	.21	.28
30	6.5	9.3	134	31	------	175	7.2	3.3	1.6	1.8	.21	.46
31	6.5	------	130	30	------	200	------	3.6	------	1.8	.21	------
TOTAL	146.2	217.7	3,832.3	1,356	688	2,997	778.8	169.3	163.48	196.00	24.67	4.79
MEAN	4.72	7.26	124	43.7	23.7	96.7	26.0	5.46	5.45	6.32	.80	.16
MAX	10	11	790	88	34	200	210	11	47	24	3.8	.46
MIN	1.6	4.3	9.3	30	13	21	6.5	2.8	.07	.36	.07	.07
AC-FT	290	432	7,600	2,690	1,360	5,940	1,540	336	324	389	49	9.5

CAL YR 1971 TOTAL 13,301.01 MEAN 36.4 MAX 790 MIN .81 AC-FT 26,380
WTR YR 1972 TOTAL 10,574.24 MEAN 28.9 MAX 790 MIN .07 AC-FT 20,970

11109700 LAKE PIRU NEAR PIRU, CALIF.

LOCATION.--Lat 34°27'52", long 118°44'57", in Temescal Grant, Ventura County, at Santa Felicia Dam on Piru Creek, on left bank 1,000 ft upstream from left end of dam, 0.5 mile downstream from Santa Felicia Canyon, and 4.2 miles northeast of Piru.

DRAINAGE AREA.--425 sq mi.

PERIOD OF RECORD.--May 1955 to current year.

GAGE.--Nonrecording gage. Datum of gage is at mean sea level (levels by United Water Conservation District). Prior to Jan. 27, 1956, reference point at intake tower at same datum.

EXTREMES.--Current year: Maximum contents, 38,640 acre-ft Apr. 11-27 (elevation, 992.15 ft); minimum, 14,780 acre-ft Sept. 30 (elevation, 955.10 ft).
Period of record: Maximum contents observed, 109,400 acre-ft Feb. 25, 1969 (elevation, 1,061.45 ft); lake dry Oct. 25 to Nov. 20, 1961.

REMARKS.--Lake is formed by earthfill dam. Storage began May 20, 1955. Capacity table is based on surveys made in 1949 and 1956. Dead storage below two 24-inch sluice gates (elevation, 880.0 ft), 74 acre-ft, included in contents. Capacity below spillway level (elevation, 1,055.0 ft), 101,225 acre-ft. Water is released from outlet to Piru Creek for ground-water recharge, domestic use, and irrigation on the Oxnard plain.

COOPERATION.--Elevations furnished by United Water Conservation District.

MONTHEND ELEVATION AND CONTENTS, WATER YEAR OCTOBER 1971 TO SEPTEMBER 1972

Date	Elevation (feet)a	Contents (acre-feet)	Change in contents (acre-feet)
Sept. 30	975.70	26,660	-
Oct. 31	967.85	21,600	-5,060
Nov. 30	966.05	20,540	-1,060
Dec. 31	979.10	28,990	+8,450
CAL YR 1971	-	-	-13,080
Jan. 31	983.60	32,200	+3,210
Feb. 29	985.45	33,560	+1,360
Mar. 31	991.05	37,790	+4,230
Apr. 30	992.10	38,600	+810
May 31	991.70	38,290	-310
June 30	991.40	38,060	-230
July 31	990.40	37,290	-770
Aug. 31	985.10	33,300	-3,990
Sept. 30	955.10	14,780	-18,520
WTR YR 1972	-	-	-11,880

a Elevation at 0800.

11110000 PIRU CREEK NEAR PIRU, CALIF.

LOCATION.--Lat 34°25'30", long 118°45'40", in southern part of Temescal Grant, Ventura County, on right bank 1.8 miles northeast of Piru, and 2 miles upstream from mouth.

DRAINAGE AREA.--437 sq mi.

PERIOD OF RECORD.--October 1911 to September 1913, October 1927 to April 1955, May 1955 to current year. Published as "at Piru" 1927-34 and as "below Santa Felicia Dam" May 1955 to September 1968. Records not equivalent prior to May 20, 1955, due to regulation by Lake Piru.

GAGE.--Water-stage recorder. Broad-crested weir since Oct. 20, 1940. Altitude of gage is 750 ft (from topographic map). See WSP 1315-B for history of changes prior to Feb. 20, 1939. Feb. 20, 1939, to Dec. 2, 1969, at datum 1.00 ft higher.

AVERAGE DISCHARGE.--29 years (1927-56), 54.8 cfs (39,700 acre-ft per year); median of yearly mean discharges, 25 cfs (18,100 acre-ft per year).

EXTREMES.--Current year: Maximum discharge, 498 cfs Sept. 29 (gage height, 4.11 ft); minimum daily, 1.6 cfs Feb. 11.

1912-13, 1927-56: Maximum discharge, 35,600 cfs Mar. 2, 1938 (gage height, 14.0 ft, site and datum then in use), from rating curve extended above 750 cfs on basis of slope-area measurement of maximum flow; no flow at times in some years.

1957 to current year: Maximum discharge, 28,800 cfs Feb. 25, 1969 (gage height, 15.9 ft), from rating curve extended above 5,200 cfs on basis of computation of peak flow over dam; no flow at times in some years.

REMARKS.--Records good. Flow regulated beginning in May 1955 by Lake Piru 2.8 miles upstream (see sta 11109700). No diversion above station. Records of chemical analyses for the current year are published in Part 2 of this report.

DISCHARGE, IN CUBIC FEET PER SECOND, WATER YEAR OCTOBER 1971 TO SEPTEMBER 1972

DAY	OCT	NOV	DEC	JAN	FEB	MAR	APR	MAY	JUN	JUL	AUG	SEP
1	76	71	11	5.0	1.9	11	10	5.9	8.5	6.3	5.0	76
2	64	71	11	5.0	1.9	11	10	6.0	8.3	6.1	29	75
3	64	70	12	4.8	1.9	11	10	5.8	8.3	6.1	62	75
4	65	71	12	4.5	1.8	11	10	6.3	8.4	6.0	63	75
5	67	71	13	4.3	1.8	11	11	6.9	8.9	5.9	63	153
6	67	71	13	2.3	1.8	11	11	7.2	7.7	5.8	63	193
7	67	71	13	2.3	1.8	11	11	7.0	6.3	5.9	62	217
8	68	71	13	2.3	1.7	11	11	6.8	5.5	6.0	62	260
9	68	63	13	2.3	1.7	11	11	4.5	5.6	6.0	62	255
10	69	13	13	2.3	1.7	11	8.5	6.1	5.3	6.0	63	255
11	69	13	13	2.3	1.6	11	4.7	6.2	5.1	8.0	62	252
12	68	13	12	2.1	6.6	11	4.3	5.6	5.0	8.6	62	248
13	68	13	11	2.1	10	11	4.3	5.4	5.0	8.6	62	252
14	68	13	10	2.1	11	11	4.5	5.2	5.0	7.2	61	267
15	68	13	11	2.0	11	11	7.9	5.3	5.0	5.7	61	265
16	68	13	11	2.1	12	11	6.1	5.5	5.0	5.6	61	263
17	69	13	10	2.0	12	11	6.2	5.7	5.0	5.5	63	259
18	69	12	10	2.0	11	11	6.4	5.9	5.3	5.5	70	330
19	69	12	10	2.0	11	12	6.5	6.3	5.3	5.6	70	450
20	69	12	10	2.0	11	12	6.3	6.2	5.5	5.8	69	448
21	69	12	10	2.0	11	12	6.2	5.8	5.3	6.3	70	445
22	70	12	21	1.8	11	12	6.0	5.7	5.7	6.1	43	441
23	70	12	14	4.6	11	11	6.0	5.6	5.8	5.6	75	440
24	73	12	45	5.0	11	12	6.0	5.7	5.9	5.3	76	444
25	71	11	20	4.9	11	13	5.9	5.7	5.9	5.1	76	456
26	71	11	17	2.1	11	13	5.9	5.6	6.1	5.1	76	466
27	72	11	37	2.0	12	11	6.4	5.3	5.8	5.1	77	470
28	71	11	26	2.0	12	9.5	6.6	7.6	6.2	4.9	76	474
29	71	11	9.4	2.0	11	9.6	6.7	8.5	5.4	5.0	76	287
30	71	11	5.0	2.0	------	9.8	6.8	8.9	6.0	4.9	76	16
31	71	------	4.9	2.0	------	9.9	------	8.2	------	4.8	76	------
TOTAL	2,140	884	441.3	86.2	216.2	344.8	223.2	192.4	182.1	184.4	1,972.0	8,607
MEAN	69.0	29.5	14.2	2.78	7.46	11.1	7.44	6.21	6.07	5.95	63.6	287
MAX	76	71	45	5.0	12	13	11	8.9	8.9	8.6	77	474
MIN	64	11	4.9	1.8	1.6	9.5	4.3	4.5	5.0	4.8	5.0	16
AC-FT	4,240	1,750	875	171	429	684	443	382	361	366	3,910	17,070

CAL YR 1971 TOTAL 20,041.8 MEAN 54.9 MAX 234 MIN 3.2 AC-FT 39,750
WTR YR 1972 TOTAL 15,473.6 MEAN 42.3 MAX 474 MIN 1.6 AC-FT 30,690

11110500 HOPPER CREEK NEAR PIRU, CALIF.

LOCATION.--Lat 34°24'03", long 118°49'32", in NE¼NE¼SW¼ sec.25, T.4 N., R.19 W., Ventura County, on downstream end of center pier of bridge on State Highway 126, 1 mile upstream from mouth, and 2.1 miles southwest of Piru.

DRAINAGE AREA.--23.6 sq mi.

PERIOD OF RECORD.--October 1930 to September 1932, October 1933 to September 1936, October 1937 to current year.

GAGE.--Water-stage recorder. Concrete control since October 1967. Altitude of gage is 590 ft (from topographic map).

AVERAGE DISCHARGE.--40 years, 5.49 cfs (3,980 acre-ft per year); median of yearly mean discharges, 2.2 cfs (1,600 acre-ft per year).

EXTREMES.--Current year: Maximum discharge, 691 cfs Dec. 24 (gage height, 6.62 ft); no flow many days.
Period of record: Maximum discharge, 8,400 cfs Jan. 25, 1969 (gage height, 12.72 ft, from floodmark), from rating curve extended above 850 cfs on basis of slope-area measurement of maximum flow; no flow for several months in most years.

REMARKS.--No regulation above station. Some pumping along stream for irrigation.

COOPERATION.--Records furnished by Ventura County Flood Control District and reviewed by Geological Survey.

DISCHARGE, IN CUBIC FEET PER SECOND, WATER YEAR OCTOBER 1971 TO SEPTEMBER 1972

DAY	OCT	NOV	DEC	JAN	FEB	MAR	APR	MAY	JUN	JUL	AUG	SEP
1	.18	0	.02	5.7	.94	.73	.31					
2	.18	0	.02	11	.83	.64	.36					
3	.10	0	.02	8.4	.83	.49	.31					
4	.10	0	.02	4.1	.94	.49	.31					
5	.06	0	.02	2.4	2.0	.56	.36					
6	.06	0	.02	1.4	1.2	.49	.26					
7	.05	0	.01	1.8	1.0	.49	.22					
8	.05	0	.01	1.6	1.0	.49	.19					
9	.03	0	.01	1.0	.94	.49	.12					
10	.01	0	.01	.83	.94	.49	.18					
11	.01	0	.01	.73	.83	.49	.31					
12	.01	.09	.01	.64	.94	.49	.31					
13	.01	0	.01	.73	.94	.56	.15					
14	.01	.03	.01	.73	.94	.64	.08					
15	0	.03	.01	.56	.94	.73	.05					
16	.02	.03	.01	.49	.94	.73	.04					
17	.02	.02	.01	.42	.94	.73	.04					
18	.01	.02	0	.36	1.0	.64	.10					
19	.01	.01	0	.31	1.0	.64	.10					
20	0	.01	0	.26	1.0	.56	.05					
21	0	.02	0	.22	1.0	.56	.03					
22	0	.02	77	.18	.94	.42	.04					
23	0	.01	24	.22	.94	.36	.03					
24	.02	.01	255	.18	.94	.31	.02					
25	.03	.02	94	.22	.94	.36	.02					
26	.01	.02	33	.26	.83	.31	.02					
27	0	.02	82	.49	.73	.26	.01					
28	0	.02	41	.56	.73	.22	0					
29	0	.01	16	.56	.83	.18	0					
30	0	.01	9.0	.64	------	.18	0					
31	0	------	6.7	.73	------	.22	------		------			------
TOTAL	.98	.40	637.93	47.72	27.97	14.95	4.02	0	0	0	0	0
MEAN	.032	.013	20.6	1.54	.96	.48	.13	0	0	0	0	0
MAX	.18	.09	255	11	2.0	.73	.36	0	0	0	0	0
MIN	0	0	0	.18	.73	.18	0	0	0	0	0	0
AC-FT	1.9	.8	1,270	95	55	30	8.0	0	0	0	0	0

CAL YR 1971 TOTAL 1,130.20 MEAN 3.10 MAX 255 MIN 0 AC-FT 2,240
WTR YR 1972 TOTAL 733.97 MEAN 2.01 MAX 255 MIN 0 AC-FT 1,460

PEAK DISCHARGE (BASE, 150 CFS)

DATE	TIME	G.H.	DISCHARGE	DATE	TIME	G.H.	DISCHARGE
12-22	0800	6.35	348	12-25	1745	6.57	486
12-23	0345	6.00	155	12-27	0645	6.19	282
12-24	0700	6.62	691				

11111500 SESPE CREEK NEAR WHEELER SPRINGS, CALIF.

LOCATION.--Lat 34°34'40", long 119°15'25", in SE¼NW¼SW¼ sec.30, T.6 N., R.22 W., Ventura County, on right bank at Sespe Gorge, 1.6 miles upstream from Tule Creek, 5 miles upstream from Cold Springs damsite, and 5 miles northeast of Wheeler Springs.

DRAINAGE AREA.--49.5 sq mi.

PERIOD OF RECORD.--October 1947 to current year. Daily discharge for period October 1947 to July 1948 estimated on basis of weather records and records for North Fork Matilija Creek.

GAGE.--Water-stage recorder. Datum of gage is 3,500.65 ft above mean sea level (levels by Ventura County Flood Control District).

AVERAGE DISCHARGE.--25 years (1947-72), 10.4 cfs (7,530 acre-ft per year); median of yearly mean discharges, 3.0 cfs (2,200 acre-ft per year).

EXTREMES.--Current year: Maximum discharge, 381 cfs Dec. 25 (gage height, 4.47 ft); minimum daily, 0.06 cfs Sept. 14, 15.
Period of record: Maximum discharge, 9,700 cfs Jan. 25, 1969 (gage height, 13.60 ft, revised), from rating curve extended above 3,000 cfs on basis of slope-area measurement of maximum flow; no flow many days in most years.

REMARKS.--Records good. No regulation or diversion above station. Records of water temperatures for the current year are published in Part 2 of this report.

DISCHARGE, IN CUBIC FEET PER SECOND, WATER YEAR OCTOBER 1971 TO SEPTEMBER 1972

DAY	OCT	NOV	DEC	JAN	FEB	MAR	APR	MAY	JUN	JUL	AUG	SEP
1	.11	.64	1.7	10	4.1	4.1	3.2	1.5	.43	.64	.11	.11
2	.11	.64	1.7	12	4.1	4.1	2.9	1.3	.43	.64	.11	.11
3	.11	.75	1.7	11	4.1	4.1	2.9	1.3	.35	.64	.11	.11
4	.11	.75	1.7	9.0	4.1	4.1	2.9	1.3	.35	.64	.11	.11
5	.11	.75	1.5	7.9	5.2	4.1	2.9	1.5	.43	.53	.11	.11
6	.11	.88	1.5	7.4	4.8	4.1	2.6	1.5	4.0	.53	.11	.11
7	.11	.75	1.5	6.9	4.5	4.1	2.4	1.5	3.2	.43	.11	.11
8	.11	.75	1.5	6.4	4.5	4.1	2.2	1.5	2.6	.43	.11	.11
9	.08	.75	1.5	6.0	4.5	4.1	2.2	1.5	2.4	.43	.11	.11
10	.08	.64	1.5	6.0	4.5	4.1	2.6	1.5	2.4	.35	.11	.11
11	.08	.75	1.5	6.0	4.5	4.1	3.2	1.2	1.9	.35	.11	.11
12	.11	1.2	1.5	6.4	4.5	4.1	2.9	1.2	1.7	.28	.11	.11
13	.16	1.2	1.5	6.9	4.5	4.1	2.6	1.2	1.5	.21	.11	.11
14	.16	1.2	1.5	6.9	4.5	3.8	2.6	1.0	1.3	.16	.11	.06
15	.21	1.2	1.5	6.9	4.5	3.8	2.4	1.0	1.0	.16	.11	.06
16	.35	1.0	1.3	6.4	4.5	3.8	2.2	1.0	.88	.11	.11	.08
17	.35	1.0	1.3	6.0	4.5	3.5	2.2	1.2	.75	.11	.11	.11
18	.35	1.0	1.3	5.6	4.5	3.5	2.4	1.3	.75	.11	.11	.11
19	.35	1.0	1.3	5.2	4.5	3.5	2.4	1.9	.64	.11	.11	.11
20	.35	1.2	1.3	5.2	4.5	3.5	2.4	2.4	.64	.11	.11	.11
21	.35	1.3	1.5	4.8	4.5	3.5	2.4	2.2	.64	.11	.11	.11
22	.35	1.2	20	4.8	4.5	3.5	2.4	1.7	.64	.11	.11	.11
23	.35	1.2	11	4.8	4.5	3.5	2.4	1.3	.64	.11	.11	.11
24	.43	1.2	103	5.2	4.1	3.5	2.4	1.3	.64	.11	.11	.11
25	.43	1.2	106	5.2	4.1	3.5	2.4	1.3	.64	.11	.08	.11
26	.43	1.2	43	5.2	4.1	3.2	2.2	1.3	.64	.11	.08	.11
27	.53	1.3	17	5.2	4.1	3.2	1.9	1.0	.64	.11	.08	.11
28	.64	1.3	13	4.8	4.1	3.2	1.9	.88	.64	.11	.08	.11
29	.64	1.5	11	4.8	4.1	3.2	1.7	.75	.64	.11	.11	.11
30	.64	1.7	10	4.5	------	3.2	1.5	.64	.64	.11	.11	.11
31	.75	------	9.5	4.1	------	3.2	------	.53	------	.11	.11	------
TOTAL	9.05	31.15	374.8	197.5	127.5	115.4	73.3	40.70	34.05	8.18	3.29	3.17
MEAN	.29	1.04	12.1	6.37	4.40	3.72	2.44	1.31	1.14	.26	.11	.11
MAX	.75	1.7	106	12	5.2	4.1	3.2	2.4	4.0	.64	.11	.11
MIN	.08	.64	1.3	4.1	4.1	3.2	1.5	.53	.35	.11	.08	.06
AC-FT	18	62	743	392	253	229	145	81	68	16	6.5	6.3

CAL YR 1971 TOTAL 2,706.39 MEAN 7.41 MAX 118 MIN .08 AC-FT 5,370
WTR YR 1972 TOTAL 1,018.09 MEAN 2.78 MAX 106 MIN .06 AC-FT 2,020

PEAK DISCHARGE (BASE, 50 CFS).--Dec. 24 (1300) 280 cfs (4.10 ft); Dec. 25 (1700) 381 cfs (4.47 ft).

11113000 SESPE CREEK NEAR FILLMORE, CALIF.

LOCATION.--Lat 34°27'03", long 118°55'30", in NE¼NW¼NE¼ sec.12, T.4 N., R.20 W., Ventura County, on right bank 0.1 mile downstream from Little Sespe Creek, and 3.5 miles north of Fillmore.

DRAINAGE AREA.--251 sq mi.

PERIOD OF RECORD.--September 1911 to September 1913, October 1927 to current year; combined records of creek and canal, October 1927 to current year. Prior to 1935, published as "at Sespe."

GAGE.--Water-stage recorder on creek; water-stage recorder and Parshall flume on canal. Altitude of gage is 580 ft (from topographic map). See WSP 1315-B for history of changes prior to Jan. 17, 1946.

AVERAGE DISCHARGE (Creek only).--47 years, 103 cfs (74,620 acre-ft per year); median of yearly mean discharges, 51 cfs (36,900 acre-ft per year).
(Combined creek and canal).--45 years, 109 cfs (78,970 acre-ft per year); median of yearly mean discharges, 46 cfs (33,300 acre-ft per year).

EXTREMES (Creek only).--Current year: Maximum discharge, 4,810 cfs Dec. 25 (gage height, 15.77 ft); minimum daily, 0.18 cfs Aug. 11-15.
Period of record: Maximum discharge, 60,000 cfs Jan. 25, 1969 (gage height, 20.80 ft), from rating curve extended above 22,000 cfs on basis of slope-area measurement at gage height 19.0 ft; maximum gage height, 24.95 ft Feb. 25, 1969 (from debris wave); no flow at times in some years.
(Combined flow).--Current year: Maximum discharge, 4,810 cfs Dec. 25; minimum daily, 3.5 cfs July 29.
Period of record: Maximum discharge, 60,000 cfs Jan. 25, 1969; minimum daily, 1.1 cfs July 31, Aug. 2, 1951.

REMARKS.--Records good. No regulation above station. Fillmore Irrigation Co. has diverted water one mile upstream since September 1911. Records of chemical analyses and suspended-sediment discharge for the current year are published in Part 2 of this report. For records of combined discharge of Sespe Creek and Fillmore Irrigation Co.'s canal, see following page.

DISCHARGE, IN CUBIC FEET PER SECOND, WATER YEAR OCTOBER 1971 TO SEPTEMBER 1972

DAY	OCT	NOV	DEC	JAN	FEB	MAR	APR	MAY	JUN	JUL	AUG	SEP
1	2.0	2.0	2.7	192	49	34	17	7.1	3.3	.96	.48	.25
2	1.8	1.4	4.0	207	47	34	17	6.8	2.6	.96	.43	.25
3	1.7	1.5	3.3	192	46	32	16	5.9	2.6	1.1	.38	.25
4	1.7	2.0	3.3	150	46	31	16	6.2	2.4	1.3	.33	.25
5	1.7	3.3	3.3	125	59	33	15	6.8	2.3	1.2	.29	.25
6	1.5	3.8	3.5	110	55	34	13	7.1	2.3	1.3	.25	.25
7	1.5	3.8	3.5	100	50	32	16	7.1	6.2	1.1	.25	.25
8	1.5	3.8	3.5	94	49	32	16	7.4	7.9	1.1	.25	.48
9	1.5	3.8	3.5	86	47	29	16	7.4	6.5	1.1	.25	.43
10	1.4	3.5	3.5	78	46	28	17	6.8	6.2	1.1	.21	.38
11	1.4	5.2	3.7	75	45	27	17	6.8	4.9	1.1	.18	.33
12	1.3	7.9	3.7	73	45	27	18	7.9	4.9	.87	.18	.29
13	1.3	6.8	3.7	71	44	28	17	6.5	4.9	.78	.18	.29
14	1.3	6.5	3.7	71	44	28	16	5.5	3.8	.78	.18	.29
15	1.3	6.5	3.7	71	44	25	14	5.9	2.8	.78	.18	.29
16	1.3	6.8	4.0	67	44	25	13	6.5	2.6	.78	.21	.29
17	1.3	5.5	4.0	66	44	24	13	4.9	1.7	.78	.21	.25
18	1.3	3.8	4.0	62	44	24	13	4.9	1.4	.61	.21	.21
19	1.3	3.8	4.0	60	43	24	13	5.2	1.4	.54	.21	.21
20	1.3	3.5	4.0	57	44	23	13	5.9	1.2	.54	.21	.21
21	1.2	3.3	5.0	57	45	21	12	6.8	.87	.48	.25	.25
22	1.2	2.6	371	56	45	20	12	6.8	.69	.48	.25	.29
23	1.2	2.8	324	54	44	20	10	6.5	.78	.43	.25	.29
24	5.5	3.3	2,120	54	44	19	9.7	6.2	1.1	.43	.27	.33
25	6.5	3.5	1,840	53	40	19	9.7	6.5	2.1	.43	.27	.33
26	3.0	3.5	919	54	39	19	8.8	6.2	1.8	.43	.29	.33
27	3.0	2.8	1,110	54	38	18	8.8	4.6	1.3	.38	.31	.43
28	3.0	2.4	569	56	37	18	8.8	3.3	1.7	.40	.33	.38
29	3.0	2.4	335	53	36	18	8.3	2.8	1.2	.48	.33	.33
30	3.0	2.4	254	51	------	17	7.9	3.3	1.1	.78	.29	.33
31	3.0	------	204	50	------	17	------	3.3	------	.61	.29	------
TOTAL	63.0	114.2	8,123.6	2,599	1,303	780	402.0	184.9	84.54	24.11	8.20	8.99
MEAN	2.03	3.81	262	83.8	44.9	25.2	13.4	5.96	2.82	.78	.26	.30
MAX	6.5	7.9	2,120	207	59	34	18	7.9	7.9	1.3	.48	.48
MIN	1.2	1.4	2.7	50	36	17	7.9	2.8	.69	.38	.18	.21
AC-FT	125	227	16,110	5,160	2,580	1,550	797	367	168	48	16	18

CAL YR 1971 TOTAL 22,591.35 MEAN 61.9 MAX 2,120 MIN .95 AC-FT 44,810
WTR YR 1972 TOTAL 13,695.54 MEAN 37.4 MAX 2,120 MIN .18 AC-FT 27,170

PEAK DISCHARGE (BASE, 1,300 CFS)

DATE	TIME	G.H.	DISCHARGE	DATE	TIME	G.H.	DISCHARGE
12-24	0845	15.83	3,650	12-27	0500	14.50	1,950
12-25	2045	15.77	4,810				

11113000 SESPE CREEK NEAR FILLMORE, CALIF.--Continued

COMBINED DISCHARGE, IN CUBIC FEET PER SECOND, OF SESPE CREEK AND FILLMORE IRRIGATION CO.'S CANAL NEAR FILLMORE, CALIF., WATER YEAR OCTOBER 1971 TO SEPTEMBER 1972

DAY	OCT	NOV	DEC	JAN	FEB	MAR	APR	MAY	JUN	JUL	AUG	SEP
1	6.7	6.7	9.1	192	49	40	22	12	7.9	5.4	4.1	4.3
2	6.7	6.9	8.5	207	47	40	22	12	7.3	5.2	4.1	4.3
3	6.5	6.9	8.7	192	46	38	21	12	7.2	5.1	4.0	4.2
4	6.5	6.8	8.9	150	46	37	21	12	6.9	5.2	4.1	4.3
5	6.3	7.1	9.4	125	59	40	21	13	6.8	5.1	4.0	4.4
6	6.0	7.3	9.7	110	55	41	19	13	6.6	5.1	4.0	4.5
7	6.0	7.3	9.4	100	50	38	21	13	12	5.1	4.0	4.2
8	6.1	7.4	9.2	94	49	38	21	13	13	5.0	4.1	4.3
9	6.0	7.4	9.4	86	47	35	20	13	10	4.9	4.1	4.8
10	5.8	7.2	9.5	78	46	35	21	13	9.6	4.9	4.0	4.8
11	5.8	7.8	9.8	75	45	34	22	13	8.6	5.0	4.0	4.8
12	5.7	8.4	9.2	73	45	33	23	11	8.1	4.8	4.2	4.6
13	5.7	7.3	9.0	71	44	33	22	11	7.9	4.6	4.3	4.4
14	6.0	6.9	9.0	71	44	33	21	10	7.3	4.6	4.4	4.3
15	6.1	6.9	9.0	71	44	30	19	9.7	6.8	4.7	4.4	4.2
16	6.3	8.0	9.3	67	44	29	18	10	6.9	4.6	4.3	4.2
17	6.4	8.3	9.3	66	44	28	18	9.3	6.5	4.6	4.2	4.1
18	6.5	7.6	9.4	62	44	29	19	9.5	6.2	4.5	4.2	4.1
19	6.5	7.5	9.5	60	43	28	19	11	6.0	4.5	4.5	4.1
20	6.4	7.5	9.6	57	44	27	18	13	6.2	4.6	4.9	4.0
21	6.2	8.0	9.2	57	45	25	17	13	5.6	4.8	4.6	4.1
22	6.1	8.2	372	56	45	25	17	14	5.7	4.7	4.1	4.0
23	6.1	8.3	324	54	45	25	16	13	6.1	4.5	4.0	4.1
24	9.5	8.3	2,120	54	48	24	16	12	5.8	4.3	4.1	4.2
25	8.3	8.3	1,840	53	45	24	15	12	6.6	4.1	4.2	4.1
26	7.3	8.4	919	54	44	24	14	12	6.1	4.0	4.2	4.1
27	7.0	8.7	1,110	54	43	23	14	10	5.6	3.9	4.4	4.6
28	6.9	8.7	569	56	43	23	14	9.8	5.9	3.7	4.4	4.7
29	6.9	8.8	335	53	42	23	13	8.9	5.7	3.5	4.2	4.5
30	7.1	8.9	254	51	------	22	13	8.3	5.3	4.3	4.3	4.0
31	7.2	------	204	50	------	22	------	8.0	------	4.2	4.3	------
TOTAL	202.6	231.8	8,241.1	2,599	1,335	946	557	354.5	216.2	143.5	130.7	129.3
MEAN	6.54	7.73	266	83.8	46.0	30.5	18.6	11.4	7.21	4.63	4.22	4.31
MAX	9.5	8.9	2,120	207	59	41	23	14	13	5.4	4.9	4.8
MIN	5.7	6.7	8.5	50	42	22	13	8.0	5.3	3.5	4.0	4.0
AC-FT	402	460	16,350	5,160	2,650	1,880	1,100	703	429	285	259	256

CAL YR 1971 TOTAL 24,140.8 MEAN 66.1 MAX 2,120 MIN 5.4 AC-FT 47,880
WTR YR 1972 TOTAL 15,086.7 MEAN 41.2 MAX 2,120 MIN 3.5 AC-FT 29,920

PEAK DISCHARGE (BASE, 1,300 CFS).--Same as those listed on previous page.

11113500 SANTA PAULA CREEK NEAR SANTA PAULA, CALIF.

LOCATION.--Lat 34°23'44", long 119°04'32", in NW¼SW¼SW¼ sec.27, T.4 N., R.21 W., Ventura County, on right bank 15 ft upstream from Santa Paula Water Works diversion dam, 200 ft upstream from Mud Creek, and 3 miles north of Santa Paula.

DRAINAGE AREA.--40.0 sq mi.

PERIOD OF RECORD.--October 1927 to current year. March 1912 to September 1913, at site 2.5 miles upstream; records not equivalent.

GAGE.--Water-stage recorder and concrete diversion dam control. Datum of gage is 638.59 ft above mean sea level (Corps of Engineers bench mark). Oct. 1, 1927, to Feb. 19, 1931, at site 500 ft downstream at different datum. Feb. 20, 1931, to Dec. 5, 1963, and July 30, 1965, to May 5, 1969, at datum 3.00 ft higher. Dec. 6, 1963, to July 29, 1965, at site 50 ft upstream at datum 3.00 ft higher.

AVERAGE DISCHARGE.--45 years, 21.2 cfs (15,360 acre-ft per year); median of yearly mean discharges, 10 cfs (7,200 acre-ft per year).

EXTREMES.--Current year: Maximum discharge, 937 cfs Dec. 25 (gage height, 6.84 ft); minimum daily, 0.34 cfs July 31.
Period of record: Maximum discharge, 21,000 cfs Feb. 25, 1969 (gage height, 18.18 ft, from floodmark, present datum), from rating curve extended above 2,300 cfs on basis of critical-depth measurement at gage height 15.2 ft; no flow at times in 1949, 1951-52, 1965.

REMARKS.--Records good. No regulation above station. Diversion above station for irrigation of 60 acres by Santa Paula Water Works began prior to October 1927; 528 acre-ft was diverted during current year. Records of chemical analyses for the current year are published in Part 2 of this report.

COOPERATION.--Records of diversion furnished by Santa Paula Water Works.

DISCHARGE, IN CUBIC FEET PER SECOND, WATER YEAR OCTOBER 1971 TO SEPTEMBER 1972

DAY	OCT	NOV	DEC	JAN	FEB	MAR	APR	MAY	JUN	JUL	AUG	SEP
1	2.6	4.3	3.5	26	8.9	5.7	2.7	1.7	1.5	1.5	.48	.35
2	2.3	4.1	3.5	24	8.6	5.7	3.0	1.7	1.4	1.4	.46	.41
3	2.1	4.1	3.5	23	8.3	5.7	2.5	2.0	1.8	1.5	.61	.56
4	2.3	3.3	3.5	11	8.2	6.0	2.4	2.0	1.9	1.3	.64	.56
5	2.1	3.4	3.5	15	10	5.9	2.6	2.1	2.3	1.3	.94	.66
6	2.3	3.0	3.6	14	8.2	5.2	2.9	2.4	2.7	1.2	.82	.76
7	2.6	3.6	3.8	13	7.6	4.9	3.2	2.9	2.8	1.3	.95	.76
8	2.8	3.3	3.2	12	7.6	4.8	3.6	3.0	2.8	1.4	.66	.86
9	2.3	2.6	3.6	12	7.9	5.4	3.4	2.8	2.9	1.5	.66	1.1
10	2.6	2.3	3.5	12	7.7	5.3	3.5	2.5	2.8	1.4	.66	1.3
11	2.8	2.6	3.3	12	7.4	5.3	3.9	2.4	2.3	1.5	.50	.98
12	3.0	4.2	3.1	11	7.6	5.4	4.2	2.0	2.0	1.4	.49	.76
13	2.1	4.1	2.9	11	10	5.0	4.1	1.9	2.5	1.0	.77	.86
14	2.7	3.6	2.8	11	12	5.2	3.9	1.9	2.1	.97	.81	.56
15	4.1	3.3	2.5	11	12	5.2	4.4	2.2	1.7	.78	.86	.98
16	5.3	3.0	2.2	12	12	5.1	4.1	2.2	1.0	.78	.98	1.3
17	7.0	1.8	2.2	12	11	5.0	3.8	2.4	1.1	.71	.76	1.3
18	8.2	3.3	2.0	12	11	5.4	4.0	2.7	1.5	.67	.76	1.3
19	7.1	3.1	2.5	12	11	5.7	4.0	2.8	1.4	.87	.98	1.3
20	6.9	5.1	2.6	12	9.5	5.0	3.8	2.8	1.5	1.3	1.1	.98
21	6.6	6.7	1.6	11	6.9	4.5	3.3	2.7	1.6	1.3	1.1	.98
22	6.3	7.0	28	11	7.0	4.4	2.8	2.7	1.5	1.2	.98	.86
23	6.5	6.2	1.5	11	6.7	4.5	2.1	2.6	1.6	.94	.98	.98
24	6.7	5.8	211	10	6.4	5.0	2.0	2.8	1.7	.85	1.1	1.3
25	5.3	5.7	202	10	6.5	4.8	2.2	3.0	1.9	.82	.98	1.3
26	4.1	5.5	64	9.5	6.6	4.5	2.0	2.7	2.0	.97	1.4	1.1
27	4.2	5.7	181	10	5.8	3.8	1.7	3.0	1.5	.76	2.6	.98
28	4.0	3.5	70	10	5.7	3.1	1.6	2.8	1.5	.77	1.4	.98
29	4.3	3.5	40	9.9	5.8	3.2	1.6	2.8	1.3	.86	.35	.86
30	5.9	3.5	30	9.3	------	3.1	1.7	2.6	1.4	.67	.35	.65
31	5.8	------	28	8.9	------	2.8	------	2.2	------	.34	.35	------
TOTAL	132.9	121.2	918.4	388.6	243.9	150.6	91.0	76.3	56.0	33.26	26.48	27.63
MEAN	4.29	4.04	29.6	12.5	8.41	4.86	3.03	2.46	1.87	1.07	.85	.92
MAX	8.2	7.0	211	26	12	6.0	4.4	3.0	2.9	1.5	2.6	1.3
MIN	2.1	1.8	1.5	8.9	5.7	2.8	1.6	1.7	1.0	.34	.35	.35
AC-FT	264	240	1,820	771	484	299	180	151	111	66	53	55

CAL YR 1971 TOTAL 4,456.10 MEAN 12.2 MAX 211 MIN 1.5 AC-FT 8,840
WTR YR 1972 TOTAL 2,266.27 MEAN 6.19 MAX 211 MIN .34 AC-FT 4,500

PEAK DISCHARGE (BASE, 200 CFS)

DATE	TIME	G.H.	DISCHARGE	DATE	TIME	G.H.	DISCHARGE
12-24	1300	6.34	498	12-27	0630	6.56	570
12-25	1700	6.84	937				

11113900 SATICOY DIVERSION NEAR SATICOY, CALIF.

LOCATION.--Lat 34°17'06", long 119°07'14", in Santa Paula Y Saticoy Grant, Ventura County, on diversion ditch 0.7 mile downstream from Santa Clara River, and 1.5 miles east of Saticoy.

PERIOD OF RECORD.--April 1969 to current year. October 1928 to April 1969 in files of United Water Conservation District.

GAGE.--Water-stage recorder. Altitude of gage is 160 ft (from topographic map).

EXTREMES.--Period of record: Maximum daily discharge, 407 cfs Jan. 5, 6, 1966; no flow at times in most years.

REMARKS.--Water is diverted from left bank of Santa Clara River to percolation basin near Los Angeles Avenue (State Highway 118) and for irrigation in Pleasant Valley. See sta 11110000, Piru Creek near Piru, for report of controlled releases from Lake Piru. Records of chemical analyses for the current year are published in Part 2 of this report.

COOPERATION.--Records furnished by United Water Conservation District.

DISCHARGE, IN CUBIC FEET PER SECOND, WATER YEAR OCTOBER 1971 TO SEPTEMBER 1972

DAY	OCT	NOV	DEC	JAN	FEB	MAR	APR	MAY	JUN	JUL	AUG	SEP
1	29	45	33	0	112	73	45	31	19	17	13	10
2	26	45	32	0	110	74	48	31	20	18	14	11
3	24	45	34	0	101	80	48	31	20	19	10	10
4	24	48	33	0	105	77	48	32	22	19	10	9.4
5	22	48	32	63	117	86	46	30	22	19	11	9.2
6	22	46	32	190	123	89	48	29	21	19	11	9.6
7	20	47	32	182	118	89	45	31	21	19	12	14
8	19	49	32	170	110	84	47	32	21	18	12	14
9	16	51	31	170	108	73	50	34	22	17	11	13
10	17	51	31	156	103	72	53	31	21	17	12	12
11	19	45	31	142	97	70	43	30	20	17	11	12
12	19	49	32	142	91	82	50	31	20	17	11	12
13	20	48	40	133	92	93	48	28	20	16	9.0	11
14	17	46	38	129	94	77	42	31	20	15	7.4	11
15	17	44	35	123	92	66	39	31	18	15	10	10
16	18	40	34	127	94	61	37	31	17	16	10	9.8
17	20	37	34	126	91	56	39	31	18	16	11	9.6
18	22	37	34	124	92	55	38	31	19	16	11	11
19	22	37	36	125	89	76	37	31	20	15	11	11
20	20	36	37	125	72	72	35	31	20	15	11	11
21	21	36	37	121	82	61	35	26	20	12	11	14
22	25	37	52	120	85	54	35	26	19	11	10	14
23	24	35	0	112	83	54	36	26	21	11	10	14
24	24	37	0	123	79	50	38	26	21	11	10	15
25	31	36	0	113	82	50	35	26	21	11	9.6	15
26	28	37	0	113	79	59	34	26	22	11	9.4	16
27	25	36	0	116	76	62	33	26	21	11	9.4	16
28	33	38	0	119	76	52	30	26	20	11	9.8	17
29	33	38	0	116	74	66	29	26	18	11	11	18
30	30	35	0	108	------	54	30	26	17	11	11	19
31	30	------	0	112	------	47	------	22	------	12	11	------
TOTAL	717	1,259	762	3,500	2,727	2,114	1,221	900	601	463	330.6	378.6
MEAN	23.1	42.0	24.6	113	94.0	68.2	40.7	29.0	20.0	14.9	10.7	12.6
MAX	33	51	52	190	123	93	53	34	22	19	14	19
MIN	16	35	0	0	72	47	29	22	17	11	7.4	9.2
AC-FT	1,420	2,500	1,510	6,940	5,410	4,190	2,420	1,790	1,190	918	656	751

CAL YR 1971 TOTAL 29,001.80 MEAN 79.5 MAX 387 MIN 0 AC-FT 57,530
WTR YR 1972 TOTAL 14,973.20 MEAN 40.9 MAX 190 MIN 0 AC-FT 29,700

11114000 SANTA CLARA RIVER AT MONTALVO, CALIF.

LOCATION.--Lat 34°14'31", long 119°11'21", in San Miguel Grant, Ventura County, on downstream end of center pier southbound bridge on U.S. Highway 101, 0.9 mile southeast of Montalvo.

DRAINAGE AREA.--1,612 sq mi.

PERIOD OF RECORD.--October 1927 to September 1932, October 1949 to current year. October 1949 to September 1969, published as "at Saticoy." Monthly discharge only for 1950-67, published in WRD 1968 report.

GAGE.--Water-stage recorder. Datum of gage is 51.88 ft above mean sea level (levels by Ventura County Flood Control District). Oct. 1, 1927, to Sept. 30, 1932, and Oct. 1, 1949, to Sept. 30, 1967, at same site at different datums. Oct. 1, 1967, to Feb. 2, 1970, at site 3.9 miles upstream at different datum.

AVERAGE DISCHARGE.--28 years, 112 cfs (81,140 acre-ft per year); median of yearly mean discharges, 22 cfs (15,900 acre-ft per year).

EXTREMES.--Current year: Maximum discharge, 8,350 cfs Dec. 27 (gage height, 7.65 ft), from rating curve extended above 5,600 cfs; no flow many days.
Period of record: Maximum discharge, 165,000 cfs Jan. 25, 1969 (gage height, 17.41 ft, present datum); no flow for long periods in most years.
Flood of Mar. 2, 1938, 120,000 cfs, estimated by Ventura County Flood Control District.

REMARKS.--Records poor. Flow partly regulated since May 1955 by Lake Piru (see sta 11109700). Natural flow affected by ground-water withdrawals, diversions, municipal use, and ground-water replenishment. Diversion to spreading grounds and for irrigation in Pleasant Valley, at site 6.0 miles upstream (see sta 11113900). AVERAGE DISCHARGE represents flow to the ocean regardless of upstream development. Records of chemical analyses and suspended-sediment discharge for the current year are published in Part 2 of this report.

COOPERATION.--Seventeen discharge measurements furnished by Ventura County Flood Control District.

DISCHARGE, IN CUBIC FEET PER SECOND, WATER YEAR OCTOBER 1971 TO SEPTEMBER 1972

DAY	OCT	NOV	DEC	JAN	FEB	MAR	APR	MAY	JUN	JUL	AUG	SEP
1	.04	.03	.1	250	1.4	4.0	.69	1.7	.03	.02	0	0
2	.04	.03	.1	240	.63	4.5	.42	1.7	.03	.02	0	0
3	.04	.03	.1	230	1.2	4.9	.23	1.7	.03	.01	0	0
4	.04	.03	.1	226	1.4	3.8	1.4	1.7	.03	.01	0	0
5	.04	.03	.1	150	.59	2.1	2.0	1.8	.04	.01	0	0
6	.04	.03	.1	100	.50	2.4	2.2	1.4	.04	.03	0	0
7	.04	.03	.1	80	1.7	4.5	2.5	.50	.04	.04	0	0
8	.04	.02	.1	60	2.2	4.5	.80	1.5	.18	.14	0	0
9	.04	.02	.1	50	2.8	3.8	.35	1.5	.54	.05	0	0
10	.04	.02	.4	40	3.1	2.9	1.0	.92	.05	.05	0	0
11	.04	.02	.3	30	2.8	2.6	2.0	1.0	.05	.05	0	0
12	.04	.02	.3	20	1.4	1.4	1.4	1.0	.06	.06	0	0
13	.04	.02	.4	10	1.9	1.0	2.3	.90	.06	.07	0	0
14	.04	.02	1.7	2.5	3.3	1.5	1.4	.80	.22	.10	0	0
15	.04	.03	2.1	.42	2.8	1.5	.59	.70	.70	.07	0	0
16	.04	.03	1.9	.23	3.5	1.7	.18	.60	.87	.05	0	.05
17	.04	.04	2.0	3.5	5.3	1.5	.87	.60	.26	.03	0	.04
18	.04	.05	0	4.7	3.5	1.4	.35	.60	.02	.01	0	.04
19	.04	.05	0	4.9	2.4	.80	.80	.50	.02	0	.10	.16
20	.04	.05	.9	5.4	1.5	.69	1.7	.03	.28	0	0	1.0
21	.04	.05	2.4	5.0	3.7	.69	2.8	.06	.17	0	0	2.5
22	.04	.05	46	1.2	5.2	.80	1.2	.02	.09	0	0	4.6
23	.04	.05	340	.35	5.6	.92	.28	.03	.08	0	0	.59
24	.04	.05	2,510	1.0	3.5	.69	.74	.03	.07	0	0	.28
25	.04	.05	1,870	1.2	2.9	.69	2.6	.03	.03	0	0	1.8
26	.03	.05	1,890	1.4	3.0	.50	2.6	.02	.04	0	0	3.9
27	.03	.05	3,700	1.6	2.6	.28	1.9	.02	.04	0	0	2.6
28	.03	.05	1,430	1.5	2.1	.59	1.8	.02	.04	.01	0	2.4
29	.03	.05	700	.44	2.1	1.0	1.8	.02	.04	.02	0	2.2
30	.03	.05	430	.14	------	.92	1.8	.02	.04	.03	0	.59
31	.03	------	300	.88	------	.50	------	.03	------	0	0	------
TOTAL	1.18	1.10	13,229.3	1,522.36	74.62	59.07	40.70	21.45	4.19	.88	.10	22.75
MEAN	.038	.037	427	49.1	2.57	1.91	1.36	.69	.14	.028	.003	.76
MAX	.04	.05	3,700	250	5.6	4.9	2.8	1.8	.87	.14	.10	4.6
MIN	.03	.02	0	.14	.50	.28	.18	.02	.02	0	0	0
AC-FT	2.3	2.2	26,240	3,020	148	117	81	43	8.3	1.7	.2	45

CAL YR 1971 TOTAL 17,640.85 MEAN 48.3 MAX 3,700 MIN 0 AC-FT 34,990
WTR YR 1972 TOTAL 14,977.70 MEAN 40.9 MAX 3,700 MIN 0 AC-FT 29,710

PEAK DISCHARGE (BASE, 1,500 CFS)

DATE	TIME	G.H.	DISCHARGE	DATE	TIME	G.H.	DISCHARGE
12-24	1600	7.37	6,280	12-27	0900	7.65	8,350
12-26	0230	7.06	4,320				

NOTE.--No gage-height record Oct. 1 to Dec. 9, Dec. 29 to Jan. 13.

11115000 MATILIJA RESERVOIR AT MATILIJA HOT SPRINGS, CALIF.

LOCATION.--Lat 34°29'08", long 119°18'25", in NE¼NW¼SE¼ sec.29, T.5 N., R.23 W., Ventura County, on left end of dam 0.2 mile east of Matilija Hot Springs, and 1.8 miles southwest of Wheeler Springs.
DRAINAGE AREA.--54.4 sq mi.
PERIOD OF RECORD.--March 1948 to September 1965, October 1970 to current year. Prior to October 1953, published as "at Matilija."
GAGE.--Water-stage recorder. Datum of gage is at mean sea level (Ventura County Department of Public Works bench mark). Prior to Nov. 12, 1970, at site near right end of dam at same datum.
EXTREMES.--Water year 1971: Maximum contents, 2,141 acre-ft May 28 (elevation, 1,090.32 ft); minimum, 5.90 acre-ft Oct. 31 (elevation, 1,038.31 ft).
Water year 1972: Maximum contents, 1,854 acre-ft Dec. 27 (elevation, 1,086.02 ft); minimum, 119 acre-ft Sept. 30 (elevation, 1,046.14 ft).
Period of record: Maximum contents, 7,399 acre-ft Apr. 3, 1958 (elevation, 1,128.10 ft); minimum, 5.90 acre-ft Oct. 31, 1970 (elevation, 1,038.31 ft).
Maximum contents from September 1965 to September 1970, 3,128 acre-ft Jan. 25, 1969 (elevation, 1,103.6 ft).
REMARKS.--Reservoir is formed by concrete-arch dam. Dam was completed in 1948. Storage began Mar. 14, 1948. Capacity table is dated October 1970 (furnished by Ventura County Flood Control District). Lowest sluice gate silted (elevation, 1,000 ft). Usable capacity, 2,380 acre-ft between elevations 1,045 ft (lowest usable outlet) and 1,095 ft (crest of spillway). Dead storage below elevation 1,045 ft, 93 acre-ft. Capacity below spillway level (elevation, 1,095 ft), 2,473 acre-ft. Water is released from reservoir to natural stream for recharge of ground-water basin in Ventura River Valley and at times releases up to 500 cfs, diverted since May 1959 at Robles diversion dam to Lake Casitas on Coyote Creek.
COOPERATION.--Elevations, prior to Nov. 12, 1970, furnished by Ventura River Municipal Water District.

MONTHEND ELEVATION AND CONTENTS, WATER YEAR OCTOBER 1970 TO SEPTEMBER 1971

Date	Elevation (feet)a	Contents (acre-feet)	Change in contents (acre-feet)
Sept. 30.....	1,046.30	123	-
Oct. 31.....	1,038.31	5.90	-117
Nov. 30.....	1,087.60	1,960	+1,954
Dec. 31.....	1,064.97	723	-1,237
CAL YR 1970.....	-	-	-
Jan. 31.....	1,067.30	823	+100
Feb. 28.....	1,063.40	659	-164
Mar. 31.....	1,082.71	1,640	+981
Apr. 30.....	1,087.90	1,979	+339
May 31.....	1,090.08	2,128	+149
June 30.....	1,071.75	1,032	-1,096
July 31.....	1,071.72	1,030	-2
Aug. 31.....	1,071.63	1,025	-5
Sept. 30.....	1,071.80	1,034	+9
WTR YR 1971.....	-	-	+911

MONTHEND ELEVATION AND CONTENTS, WATER YEAR OCTOBER 1971 TO SEPTEMBER 1972

Date	Elevation (feet)a	Contents (acre-feet)	Change in contents (acre-feet)
Oct. 31.....	1,071.95	1,042	+8
Nov. 30.....	1,060.54	553	-489
Dec. 31.....	1,061.00	569	+16
CAL YR 1971.....	-	-	-154
Jan. 31.....	1,066.00	767	+198
Feb. 29.....	1,067.00	810	+43
Mar. 31.....	1,068.15	861	+51
Apr. 30.....	1,070.41	968	+107
May 31.....	1,071.55	1,022	+54
June 30.....	1,071.49	1,018	-4
July 31.....	1,071.45	1,017	-1
Aug. 31.....	1,071.30	1,010	-7
Sept. 30.....	1,046.14	119	-891
WTR YR 1972.....	-	-	-915

a Elevation at 2400.

11115500 MATILIJA CREEK AT MATILIJA HOT SPRINGS, CALIF.

LOCATION.--Lat 34°28'58", long 119°18'03", in SW¼NW¼SW¼ sec.28, T.5 N., R.23 W., Ventura County, on right bank 0.2 mile east of Matilija Hot Springs, 0.2 mile upstream from North Fork, and 0.4 mile downstream from Matilija Dam.

DRAINAGE AREA.--54.6 sq mi.

PERIOD OF RECORD.--October 1927 to current year. Combined monthly records for creek and diversion, May 1951 to September 1969. Prior to October 1953, published as "at Matilija."

GAGE.--Water-stage recorder. Concrete control since September 1969. Altitude of gage is 900 ft (from topographic map). Prior to Feb. 11, 1939, at site 0.6 mile upstream at different datum.

EXTREMES.--Current year: Maximum discharge, 380 cfs Dec. 29 (gage height, 4.17 ft); minimum daily, 1.4 cfs Aug. 23.

Period of record: Maximum discharge, 20,000 cfs Jan. 25, 1969 (gage height, 16.5 ft), from rating curve extended above 4,200 cfs on basis of computation of maximum flow over dam; minimum daily, 0.10 cfs for several days in some years of regulated flow.

REMARKS.--Records good. Flow regulated by Matilija Reservoir March 1948 to March 1964 (capacity, 7,020 acre-ft) and partly regulated since March 1964 (capacity, 2,473 acre-ft). Water diverted at dam by Matilija conduit to Ventura River basin and Ojai Valley for irrigation from May 1951 to January 1969.

COOPERATION.--Two discharge measurements furnished by Casitas Municipal Water District.

DISCHARGE, IN CUBIC FEET PER SECOND, WATER YEAR OCTOBER 1971 TO SEPTEMBER 1972

DAY	OCT	NOV	DEC	JAN	FEB	MAR	APR	MAY	JUN	JUL	AUG	SEP
1	2.3	2.2	3.2	48	13	12	6.7	4.4	3.4	2.4	1.5	1.5
2	2.3	2.2	3.2	53	13	12	6.7	4.0	3.4	2.0	1.5	1.5
3	2.3	2.2	3.2	53	13	12	6.5	4.0	3.8	2.0	1.7	1.5
4	2.3	2.2	3.2	53	13	12	6.5	4.0	3.8	2.0	1.5	1.5
5	2.3	2.2	3.2	41	13	13	4.9	4.0	3.5	2.0	1.5	3.2
6	2.3	2.3	3.2	33	13	13	4.3	4.0	3.4	2.0	1.5	4.9
7	2.3	2.4	3.2	34	13	8.3	4.3	4.0	3.3	2.1	1.5	4.9
8	2.3	2.4	3.2	32	13	3.4	4.3	3.7	3.3	2.1	1.5	4.9
9	2.3	2.4	3.2	25	13	4.0	4.0	3.7	3.2	2.1	1.5	4.9
10	2.3	2.4	3.2	24	13	7.1	4.3	3.7	3.2	2.1	1.5	4.9
11	2.3	2.5	3.3	25	13	8.3	4.3	3.5	3.2	2.1	1.5	79
12	2.3	2.6	3.3	24	13	9.0	4.3	3.4	3.1	2.0	1.5	130
13	2.3	2.4	3.8	24	13	9.0	4.3	3.3	3.1	1.9	1.5	122
14	2.3	2.4	4.1	24	13	9.4	4.0	3.3	3.0	2.0	1.5	60
15	2.3	2.4	4.4	24	13	9.5	3.4	3.4	2.8	2.0	1.5	4.9
16	2.3	60	4.6	23	13	9.5	3.4	3.4	2.8	2.0	1.5	4.9
17	2.4	106	4.6	24	13	9.5	3.4	3.4	3.0	2.0	1.5	4.7
18	2.4	103	4.6	17	13	9.5	3.7	3.4	3.1	2.0	1.5	8.1
19	2.4	49	4.2	13	13	9.4	3.7	3.4	3.0	2.0	1.5	12
20	2.3	2.2	3.8	13	13	8.5	3.7	3.4	3.0	2.0	1.5	7.4
21	2.2	2.8	4.1	13	13	8.5	3.7	3.4	3.0	2.0	1.5	4.2
22	2.3	3.0	5.6	13	13	8.5	4.0	3.6	3.0	2.0	1.5	4.2
23	2.3	3.0	4.4	13	13	9.0	4.0	3.7	3.0	1.9	1.4	4.2
24	2.6	3.0	126	13	13	8.9	4.2	3.7	3.0	1.7	1.5	4.2
25	2.5	3.1	134	13	13	8.8	4.3	3.7	3.0	1.6	1.5	4.4
26	2.6	3.2	4.8	13	13	7.6	4.3	3.7	2.9	1.6	1.5	4.0
27	2.5	3.2	134	13	13	6.5	4.3	3.6	2.7	1.5	1.5	3.8
28	2.3	3.4	276	13	13	6.5	4.6	3.4	2.7	1.5	1.5	3.6
29	2.2	3.3	337	13	12	6.7	4.6	3.4	2.6	1.5	1.5	3.3
30	2.3	3.2	175	13	------	6.7	4.6	3.4	2.6	1.5	1.5	3.0
31	2.2	------	65	13	------	6.7	------	3.4	------	1.5	1.5	------
TOTAL	72.3	386.6	1,338.6	750	376	272.8	133.3	112.4	92.9	59.1	46.6	505.6
MEAN	2.33	12.9	43.2	24.2	13.0	8.80	4.44	3.63	3.10	1.91	1.50	16.9
MAX	2.6	106	337	53	13	13	6.7	4.4	3.8	2.4	1.7	130
MIN	2.2	2.2	3.2	13	12	3.4	3.4	3.3	2.6	1.5	1.4	1.5
AC-FT	143	767	2,660	1,490	746	541	264	223	184	117	92	1,000

CAL YR 1971 TOTAL 6,463.06 MEAN 17.7 MAX 337 MIN .43 AC-FT 12,820
WTR YR 1972 TOTAL 4,146.20 MEAN 11.3 MAX 337 MIN 1.4 AC-FT 8,220

11116000 NORTH FORK MATILIJA CREEK AT MATILIJA HOT SPRINGS, CALIF.

LOCATION.--Lat 34°29'33", long 119°18'20", in NE¼NW¼NE¼ sec.29, T.5 N., R.23 W., Ventura County, on right bank at bridge on U.S. Highway 399, 0.7 mile north of Matilija Hot Springs, and 0.8 mile upstream from mouth.

DRAINAGE AREA.--15.6 sq mi.

PERIOD OF RECORD.--October 1928 to September 1932, October 1933 to current year. Prior to October 1953, published as "at Matilija."

GAGE.--Water-stage recorder. Concrete control since September 1966. Datum of gage is 1,142.02 ft above mean sea level (levels by Ventura County Flood Control District). Prior to Nov. 12, 1948, at site 0.3 mile downstream at different datum.

AVERAGE DISCHARGE.--43 years, 10.1 cfs (7,320 acre-ft per year); median of yearly mean discharges, 4.2 cfs (3,000 acre-ft per year).

EXTREMES.--Current year: Maximum discharge, 600 cfs Dec. 25 (gage height, 3.85 ft); minimum daily, 0.60 cfs many days.

Period of record: Maximum discharge, 9,440 cfs Feb. 24, 1969 (gage height, 11.0 ft, from floodmark), from rating curve extended above 1,700 cfs on basis of slope-area measurement at gage height 10.0 ft; minimum daily, 0.10 cfs for several days in some years.

REMARKS.--No regulation or diversion above station.

COOPERATION.--Records furnished by Ventura County Flood Control District and reviewed by Geological Survey.

DISCHARGE, IN CUBIC FEET PER SECOND, WATER YEAR OCTOBER 1971 TO SEPTEMBER 1972

DAY	OCT	NOV	DEC	JAN	FEB	MAR	APR	MAY	JUN	JUL	AUG	SEP
1	1.0	1.2	1.3	14	4.0	2.8	1.9	1.2	.85	.60	.60	.60
2	1.0	1.2	1.3	14	3.7	2.8	1.9	1.2	.85	.60	.60	.60
3	1.0	1.2	1.3	14	3.7	2.8	1.9	1.2	.85	.60	.60	.60
4	1.0	1.2	1.3	12	3.7	2.8	1.9	1.3	.85	.60	.60	.60
5	1.0	1.2	1.3	12	4.4	2.8	1.9	1.3	.85	.60	.60	.60
6	1.0	1.2	1.3	11	4.0	2.8	1.9	1.3	.85	.60	.60	.60
7	1.0	1.2	1.5	10	3.7	2.8	1.9	1.3	.85	.60	.60	.60
8	.85	1.2	1.5	8.9	3.7	2.8	1.7	1.3	.85	.60	.60	.60
9	.85	1.2	1.5	7.9	3.7	2.8	1.7	1.2	1.0	.60	.60	.60
10	.85	1.2	1.5	7.4	3.7	2.8	1.7	1.0	1.0	.60	.60	.60
11	.85	1.3	1.5	7.4	3.7	2.8	1.7	1.0	.85	.60	.60	.60
12	.85	1.7	1.5	7.0	3.7	2.8	1.7	.85	.85	.60	.60	.60
13	.85	1.3	1.5	6.6	3.7	2.8	1.5	.85	.85	.60	.72	.60
14	.85	1.3	1.5	5.8	3.7	2.8	1.5	.72	.85	.60	.72	.60
15	1.0	1.3	1.5	5.4	3.7	2.6	1.5	.72	.85	.60	.72	.60
16	1.2	1.2	1.5	5.1	3.7	2.6	1.5	.85	.85	.60	.60	.60
17	1.2	1.2	1.5	4.8	3.7	2.6	1.5	1.0	.85	.60	.60	.60
18	1.2	1.2	1.5	4.8	3.7	2.4	1.5	1.2	.85	.60	.60	.60
19	1.2	1.2	1.5	4.8	3.7	2.4	1.5	1.3	.85	.60	.60	.60
20	1.2	1.2	1.5	4.8	3.7	2.4	1.5	1.3	.85	.72	.60	.60
21	1.2	1.3	1.5	4.4	3.7	2.4	1.5	1.3	.85	.72	.60	.60
22	1.2	1.3	10	4.0	3.4	2.4	1.5	1.2	1.0	.60	.60	.60
23	1.2	1.3	13	4.0	3.4	2.4	1.5	1.2	1.0	.60	.60	.60
24	1.3	1.3	94	4.0	3.4	2.4	1.5	1.2	1.0	.60	.60	.60
25	1.5	1.3	160	4.0	3.4	2.4	1.5	1.2	1.0	.60	.60	.60
26	1.5	1.3	58	4.0	3.1	2.4	1.2	1.2	.85	.60	.60	.60
27	1.5	1.3	154	4.0	3.1	2.4	1.2	1.0	.72	.60	.60	.60
28	1.5	1.3	44	4.0	3.1	2.1	1.2	1.0	.60	.60	.60	.60
29	1.3	1.3	28	4.0	3.1	2.1	1.2	.85	.60	.60	.60	.60
30	1.3	1.3	20	4.0	------	2.1	1.2	.85	.60	.60	.60	.60
31	1.2	------	16	4.0	------	2.1	------	.85	------	.60	.60	------
TOTAL	34.65	37.9	627.3	212.1	105.0	79.4	47.3	33.94	25.52	18.84	18.96	18.00
MEAN	1.12	1.26	20.2	6.84	3.62	2.56	1.58	1.09	.85	.61	.61	.60
MAX	1.5	1.7	160	14	4.4	2.8	1.9	1.3	1.0	.72	.72	.60
MIN	.85	1.2	1.3	4.0	3.1	2.1	1.2	.72	.60	.60	.60	.60
AC-FT	69	75	1,240	421	208	157	94	67	51	37	38	36

CAL YR 1971 TOTAL 1,830.50 MEAN 5.02 MAX 160 MIN .85 AC-FT 3,630
WTR YR 1972 TOTAL 1,258.91 MEAN 3.44 MAX 160 MIN .60 AC-FT 2,500

PEAK DISCHARGE (BASE, 40 CFS)

DATE	TIME	G.H.	DISCHARGE	DATE	TIME	G.H.	DISCHARGE
12-22	2400	2.07	48	12-25	1515	3.85	600
12-24	1300	3.15	236	12-27	0700	3.70	340

11116550 VENTURA RIVER NEAR MEINERS OAKS, CALIF.

LOCATION.--Lat 34°27'54", long 119°17'20", in SE¼SW¼SE¼ sec.33, T.5 N., R.23 W., Ventura County, on right bank 50 ft downstream from Robles diversion dam, and 1.2 miles northwest of Meiners Oaks.

DRAINAGE AREA.--76.4 sq mi.

PERIOD OF RECORD.--May 1959 to current year.

GAGE.--Water-stage recorder. Datum of gage is 750.00 ft above mean sea level (Bureau of Reclamation bench mark). Prior to Oct. 30, 1969, at site 500 ft downstream at datum 5.40 ft lower.

EXTREMES.--Current year: Maximum discharge, 206 cfs Dec. 25 (gage height, 5.86 ft); no flow much of year. Period of record: Maximum discharge, 28,000 cfs (estimated) Jan. 25, 1969 (gage height, unknown); no flow for several months in most years.

REMARKS.--Records good. Flow regulated by Matilija Reservoir (capacity, 2,473 acre-ft). Flow up to 500 cfs diverted since May 1959 at Robles diversion dam to Lake Casitas on Coyote Creek. Flow reported herein is that released through gates in Robles diversion dam.

DISCHARGE, IN CUBIC FEET PER SECOND, WATER YEAR OCTOBER 1971 TO SEPTEMBER 1972

DAY	OCT	NOV	DEC	JAN	FEB	MAR	APR	MAY	JUN	JUL	AUG	SEP
1		.40	0	13	17	12	3.3		0			0
2		1.6	.31	12	16	12	4.4		0			0
3		1.3	.55	13	16	12	4.4		0			0
4		.97	.34	13	17	12	3.7		0			0
5		.46	.40	13	18	11	2.5		0			0
6		.90	.43	13	17	11	1.2		0			0
7		.28	.46	13	17	8.5	.77		.13			0
8		0	.40	13	17	4.0	.37		.83			0
9		.40	.25	13	17	3.0	.28		.50			0
10		0	0	13	17	6.4	0		0			0
11		.34	.50	13	16	6.5	.76		0			.09
12		1.4	.70	12	15	8.4	1.1		0			.09
13		1.1	.37	12	15	8.9	1.1		0			.09
14		1.2	.31	13	15	8.8	1.1		0			.09
15		1.3	.34	13	14	9.4	.23		0			6.4
16		1.1	.40	13	12	9.2	0		0			2.2
17		.50	.28	13	14	10	0		0			2.3
18		.40	0	13	13	9.1	0		0			3.0
19		2.0	0	15	13	6.3	0		0			9.0
20		3.8	.16	15	12	5.2	0		0			5.9
21		2.4	.25	16	11	4.7	0		0			.65
22		2.2	16	15	11	4.4	0		0			.09
23		.76	19	15	11	4.5	0		0			.09
24		.28	14	15	11	4.7	0		0			.09
25		0	24	13	11	4.6	0		0			.09
26		0	11	13	10	3.8	0		0			.09
27		0	4.9	15	10	3.3	0		0			.09
28		0	8.2	16	10	3.1	0		0			.09
29		0	12	16	11	3.5	0		0			.09
30		0	12	16	------	2.6	0		0			.09
31		------	9.3	16	------	2.5	------		------			------
TOTAL	0	25.09	136.85	427	404	215.4	25.21	0	1.46	0	0	30.62
MEAN	0	.84	4.41	13.8	13.9	6.95	.84	0	.049	0	0	1.02
MAX	0	3.8	24	16	18	12	4.4	0	.83	0	0	9.0
MIN	0	0	0	12	10	2.5	0	0	0	0	0	0
AC-FT	0	50	271	847	801	427	50	0	2.9	0	0	61

CAL YR 1971 TOTAL 1,832.39 MEAN 5.02 MAX 47 MIN 0 AC-FT 3,630
WTR YR 1972 TOTAL 1,265.63 MEAN 3.46 MAX 24 MIN 0 AC-FT 2,510

NOTE.--No gage-height record June 10 to Sept. 9.

11117500 SAN ANTONIO CREEK AT CASITAS SPRINGS, CALIF.

LOCATION.--Lat 34°22'49", long 119°18'13", in Santa Ana Grant, Ventura County, on downstream side of bridge on U.S. Highway 399, 0.2 mile upstream from mouth, and 0.9 mile north of Casitas Springs.

DRAINAGE AREA.--51.2 sq mi.

PERIOD OF RECORD.--October 1949 to current year.

GAGE.--Water-stage recorder. Datum of gage is 307.25 ft above mean sea level (levels by Ventura County Flood Control District). Prior to Jan. 30, 1962, at datum 0.30 ft higher.

AVERAGE DISCHARGE.--23 years, 11.1 cfs (8,040 acre-ft per year); median of yearly mean discharges, 1.9 cfs (1,400 acre-ft per year).

EXTREMES.--Current year: Maximum discharge, 1,150 cfs Dec. 27 (gage height, 6.35 ft); no flow many days. Period of record: Maximum discharge, 16,200 cfs Jan. 25, 1969 (gage height, 14.30 ft, from inside gage), from rating curve extended above 2,000 cfs on basis of slope-area measurement of maximum flow; no flow for several months in most years.

REMARKS.--No regulation above station; pumping from wells along creek for irrigation.

COOPERATION.--Records furnished by Ventura County Flood Control District and reviewed by Geological Survey.

DISCHARGE, IN CUBIC FEET PER SECOND, WATER YEAR OCTOBER 1971 TO SEPTEMBER 1972

DAY	OCT	NOV	DEC	JAN	FEB	MAR	APR	MAY	JUN	JUL	AUG	SEP
1	.44	.53	.53	6.1	2.1	1.3	.89	.76	.17	.12		
2	.53	.53	.53	5.3	2.1	1.3	.89	.76	.17	.12		
3	.53	.53	.53	5.3	2.1	1.2	.89	.76	.23	.12		
4	.53	.53	.53	5.0	2.1	1.0	.89	.76	.23	.09		
5	.53	.53	.53	4.6	4.2	1.0	1.0	.76	.23	.03		
6	.53	.53	.53	4.2	2.8	1.2	1.0	.76	.23	.02		
7	.53	.53	.53	4.2	2.3	1.2	1.0	.76	.23	.02		
8	.53	.53	.53	3.9	2.1	1.2	1.0	.76	.23	.03		
9	.44	.53	.53	3.6	2.1	1.3	1.0	.76	.29	.03		
10	.44	.53	.53	3.3	2.1	1.3	1.2	.76	.17	.01		
11	.44	.53	.53	3.3	2.1	1.3	1.2	.64	.06	.01		
12	.36	.76	.53	3.0	2.1	1.2	1.3	.53	.17	.01		
13	.36	.64	.64	3.0	2.1	1.2	1.2	.44	.23	.01		
14	.36	.53	.64	2.8	2.1	1.3	1.0	.44	.17	.01		
15	.36	.44	.64	2.8	2.1	1.2	1.0	.44	.17	.01		
16	.36	.66	.64	2.6	2.1	1.0	1.0	.53	.17	.01		
17	.44	.58	.64	2.6	2.1	.89	1.0	.53	.23	.01		
18	.44	.63	.64	2.6	2.1	.76	1.0	.53	.17	0		
19	.36	.45	.64	2.6	2.1	.76	1.0	.53	.12	.01		
20	.36	.58	.64	2.6	2.1	.76	.89	.53	.09	.02		
21	.36	.70	.64	2.3	2.1	.76	.76	.53	.06	.02		
22	.36	.44	15	2.3	1.9	.76	.76	.53	.12	.01		
23	.36	.44	8.2	2.3	1.9	.76	.76	.53	.17	0		
24	.36	.44	92	2.3	1.9	.76	.64	.53	.17	0		
25	.36	.44	120	2.1	1.7	.89	.64	.53	.12	0		
26	.44	.44	76	2.1	1.7	.89	.64	.53	.09	0		
27	.44	.44	321	2.8	1.7	.89	.64	.53	.09	0		
28	.44	.44	48	2.8	1.5	.89	.64	.36	.09	0		
29	.44	.53	14	2.6	1.5	.89	.76	.29	.09	0		
30	.53	.53	8.8	2.3	------	.89	.76	.23	.12	0		
31	.53	------	7.3	2.1	------	.89	------	.17	------	0		------
TOTAL	13.49	15.94	722.42	99.4	60.9	31.64	27.35	17.50	4.88	.72	0	0
MEAN	.44	.53	23.3	3.21	2.10	1.02	.91	.56	.16	.023	0	0
MAX	.53	.76	321	6.1	4.2	1.3	1.3	.76	.29	.12	0	0
MIN	.36	.44	.53	2.1	1.5	.76	.64	.17	.06	0	0	0
AC-FT	27	32	1,430	197	121	63	54	35	9.7	1.4	0	0

CAL YR 1971 TOTAL 1,680.29 MEAN 4.60 MAX 321 MIN .36 AC-FT 3,330
WTR YR 1972 TOTAL 994.24 MEAN 2.72 MAX 321 MIN 0 AC-FT 1,970

PEAK DISCHARGE (BASE, 200 CFS)

DATE	TIME	G.H.	DISCHARGE	DATE	TIME	G.H.	DISCHARGE
12-24	1000	4.82	256	12-26	1800	5.05	387
12-25	1800	5.42	520	12-27	0700	6.35	1,150

11117600 COYOTE CREEK NEAR OAK VIEW, CALIF.

LOCATION.--Lat 34°25'02", long 119°22'01", in Santa Ana Grant, Ventura County, on right bank 1,000 ft downstream from Los Padres National Forest boundary, 0.6 mile upstream from Poplin Creek, and 4.2 miles northwest of Oak View.

DRAINAGE AREA.--13.2 sq mi.

PERIOD OF RECORD.--October 1958 to current year.

GAGE.--Water-stage recorder. Datum of gage is 560.47 ft above mean sea level (Bureau of Reclamation bench mark).

AVERAGE DISCHARGE.--14 years, 6.19 cfs (4,480 acre-ft per year); median of yearly mean discharges, 2.2 cfs (1,600 acre-ft per year).

EXTREMES.--Current year: Maximum discharge, 2,030 cfs Dec. 27 (gage height, 9.41 ft); minimum daily, 0.04 cfs Aug. 1, 2.
Period of record: Maximum discharge, 8,000 cfs Jan. 25, 1969 (gage height, 12.00 ft, from floodmarks), from rating curve extended above 2,100 cfs on basis of slope-area measurements at gage heights 9.10 and 12.00 ft; no flow at times in most years.

REMARKS.--Records good. No regulation or diversion above station.

COOPERATION.--One discharge measurement furnished by Casitas Municipal Water District.

DISCHARGE, IN CUBIC FEET PER SECOND, WATER YEAR OCTOBER 1971 TO SEPTEMBER 1972

DAY	OCT	NOV	DEC	JAN	FEB	MAR	APR	MAY	JUN	JUL	AUG	SEP
1	.26	.46	.50	6.1	1.6	.89	.64	.47	.25	.16	.04	.06
2	.26	.46	.50	5.2	1.4	.89	.64	.43	.24	.16	.04	.08
3	.25	.45	.50	4.6	1.4	.89	.64	.42	.24	.15	.07	.10
4	.23	.44	.58	3.9	1.4	.89	.65	.42	.22	.12	.09	.13
5	.23	.46	.58	3.6	1.9	.78	.68	.42	.20	.11	.08	.12
6	.24	.50	.58	3.4	1.7	.78	.63	.42	.20	.11	.07	.14
7	.25	.50	.58	3.2	1.6	.78	.56	.40	.25	.12	.06	.12
8	.26	.50	.68	3.0	1.4	.78	.55	.40	.26	.10	.06	.14
9	.26	.42	.68	2.9	1.4	.78	.55	.33	.27	.10	.07	.15
10	.25	.42	.68	2.8	1.4	.78	.56	.31	.24	.10	.08	.16
11	.27	.51	.68	2.6	1.3	.78	.61	.30	.20	.10	.07	.15
12	.27	.52	.68	2.5	1.3	.78	.55	.28	.18	.10	.08	.11
13	.28	.42	.68	2.3	1.3	.78	.52	.27	.17	.10	.11	.10
14	.34	.42	.78	2.3	1.3	.68	.60	.26	.17	.10	.11	.09
15	.33	.48	.78	2.3	1.3	.69	.56	.28	.16	.13	.10	.09
16	.35	.50	.78	2.1	1.1	.72	.57	.29	.15	.13	.09	.07
17	.37	.42	.78	2.1	1.1	.74	.59	.33	.15	.12	.10	.08
18	.37	.42	.78	1.9	1.1	.75	.62	.35	.20	.11	.11	.08
19	.33	.42	.78	1.9	1.1	.75	.61	.33	.19	.13	.13	.09
20	.33	.42	.78	1.9	1.0	.76	.59	.35	.16	.14	.11	.10
21	.32	.46	.78	1.8	1.0	.75	.58	.33	.15	.15	.08	.08
22	.32	.50	1.7	1.7	1.0	.75	.55	.33	.19	.12	.06	.07
23	.33	.50	2.8	1.7	1.0	.64	.55	.34	.23	.10	.05	.08
24	.44	.49	42	1.7	1.0	.63	.55	.35	.22	.08	.06	.10
25	.40	.42	79	1.7	.89	.64	.52	.31	.20	.08	.09	.12
26	.42	.42	21	1.7	.89	.63	.49	.29	.16	.08	.09	.13
27	.47	.42	377	1.9	.89	.63	.49	.29	.14	.07	.09	.12
28	.46	.46	36	2.0	.89	.64	.47	.26	.15	.05	.10	.11
29	.46	.50	17	1.7	.89	.64	.47	.26	.14	.06	.06	.11
30	.50	.50	10	1.6	------	.63	.47	.25	.14	.06	.06	.09
31	.53	------	7.6	1.6	------	.63	------	.25	------	.05	.06	------
TOTAL	10.38	13.81	608.24	79.7	35.55	22.88	17.06	10.32	5.82	3.29	2.47	3.17
MEAN	.33	.46	19.6	2.57	1.23	.74	.57	.33	.19	.11	.080	.11
MAX	.53	.52	377	6.1	1.9	.89	.68	.47	.27	.16	.13	.16
MIN	.23	.42	.50	1.6	.89	.63	.47	.25	.14	.05	.04	.06
AC-FT	21	27	1,210	158	71	45	34	20	12	6.5	4.9	6.3

CAL YR 1971 TOTAL 1,126.55 MEAN 3.09 MAX 377 MIN .18 AC-FT 2,230
WTR YR 1972 TOTAL 812.69 MEAN 2.22 MAX 377 MIN .04 AC-FT 1,610

PEAK DISCHARGE (BASE, 150 CFS).--Dec. 25 (1700) 328 cfs (7.53 ft); Dec. 27 (0615) 2,030 cfs (9.41 ft).

11117800 SANTA ANA CREEK NEAR OAK VIEW, CALIF.

LOCATION.--Lat 34°25'25", long 119°20'25", in Santa Ana Grant, Ventura County, on upstream end of right abutment of bridge, 400 ft upstream from unnamed tributary, and 3.0 miles northwest of Oak View.

DRAINAGE AREA.--9.11 sq mi.

PERIOD OF RECORD.--October 1958 to current year.

GAGE.--Water-stage recorder. Datum of gage is 612.43 ft above mean sea level (Bureau of Reclamation bench mark). Prior to Aug. 17, 1970, on downstream end of right abutment.

AVERAGE DISCHARGE.--14 years, 5.21 cfs (3,770 acre-ft per year); median of yearly mean discharges, 1.7 cfs (1,200 acre-ft per year).

EXTREMES.--Current year: Maximum discharge, 1,690 cfs Dec. 27 (gage height, 8.79 ft); no flow Oct. 1 to Dec. 21, May 11 to Sept. 30.
Period of record: Maximum discharge, 4,730 cfs Jan. 25, 1969 (gage height, 10.70 ft); no flow at times in each year.
Flood of Mar. 2, 1938, 3,780 cfs, by slope-area measurement at site 2.0 miles downstream.

REMARKS.--Records good. No regulation or diversion above station.

COOPERATION.--One discharge measurement furnished by Casitas Municipal Water District.

DISCHARGE, IN CUBIC FEET PER SECOND, WATER YEAR OCTOBER 1971 TO SEPTEMBER 1972

DAY	OCT	NOV	DEC	JAN	FEB	MAR	APR	MAY	JUN	JUL	AUG	SEP
1			0	15	1.4	.53	.10	.01				
2			0	12	1.3	.31	.06	.02				
3			0	10	1.3	.31	.06	.01				
4			0	8.0	1.3	.31	.05	.03				
5			0	6.9	2.1	.31	.04	.04				
6			0	5.6	1.6	.31	.03	.05				
7			0	4.4	1.4	.35	.04	.04				
8			0	4.0	1.3	.35	.04	.03				
9			0	3.4	1.3	.31	.03	.02				
10			0	3.1	1.2	.31	.04	.01				
11			0	2.8	1.2	.31	.07	0				
12			0	2.8	1.1	.27	.05	0				
13			0	2.8	1.1	.19	.07	0				
14			0	2.8	1.1	.15	.07	0				
15			0	2.5	1.1	.15	.04	0				
16			0	2.3	1.0	.15	.03	0				
17			0	2.1	1.1	.15	.04	0				
18			0	1.9	1.0	.15	.05	0				
19			0	1.9	1.0	.15	.07	0				
20			0	1.9	1.0	.15	.07	0				
21			0	1.7	1.0	.15	.07	0				
22			3.9	1.7	1.0	.15	.07	0				
23			7.8	1.7	.99	.19	.06	0				
24			61	1.7	.98	.19	.07	0				
25			73	1.7	.92	.19	.05	0				
26			37	1.7	.87	.15	.04	0				
27			348	2.3	.84	.11	.03	0				
28			53	3.1	.81	.11	.02	0				
29			32	1.4	.81	.12	.02	0				
30			27	1.4	------	.10	.02	0				
31		------	20	1.4	------	.10	------	0	------			------
TOTAL	0	0	662.7	116.0	33.12	6.78	1.50	.26	0	0	0	0
MEAN	0	0	21.4	3.74	1.14	.22	.050	.008	0	0	0	0
MAX	0	0	348	15	2.1	.53	.10	.05	0	0	0	0
MIN	0	0	0	1.4	.81	.10	.02	0	0	0	0	0
AC-FT	0	0	1,310	230	66	13	3.0	.5	0	0	0	0

CAL YR 1971 TOTAL 1,025.03 MEAN 2.81 MAX 348 MIN 0 AC-FT 2,030
WTR YR 1972 TOTAL 820.36 MEAN 2.24 MAX 348 MIN 0 AC-FT 1,630

PEAK DISCHARGE (BASE, 150 CFS)

DATE	TIME	G.H.	DISCHARGE	DATE	TIME	G.H.	DISCHARGE
12-24	1315	7.38	150	12-27	0430	8.79	1,690
12-25	1500	7.72	273				

11118000 COYOTE CREEK NEAR VENTURA, CALIF.

LOCATION.--Lat 34°21'26", long 119°18'46", near southeast corner of Santa Ana Grant, Ventura County, on right bank 200 ft downstream from county highway bridge, 0.3 mile upstream from mouth, and 5.5 miles northwest of Ventura.

DRAINAGE AREA.--41.2 sq mi.

PERIOD OF RECORD.--October 1927 to September 1932, October 1933 to September 1958, October 1969 to current year.

GAGE.--Water-stage recorder. Datum of gage is 224.95 ft above mean sea level (Ventura County Flood Control bench mark). See WSP 1735 for history of changes prior to Oct. 1, 1969.

AVERAGE DISCHARGE.--30 years (1927-32, 1933-58), 13.2 cfs (9,560 acre-ft per year); median of yearly mean discharges, 5.1 cfs (3,700 acre-ft per year).

EXTREMES.--Current year: Maximum discharge, 45 cfs Dec. 27 (gage height, 7.07 ft), from rating curve extended above 6 cfs; no flow Oct. 1 to Dec. 21, May 26 to Sept. 30.
Period of record: Maximum discharge, 11,500 cfs Mar. 2, 1938, on basis of slope-area measurement of maximum flow; no flow at times in some years.

REMARKS.--Records fair. Flow mostly regulated by Casitas Reservoir since October 1959 (capacity, 267,000 acre-ft).

DISCHARGE, IN CUBIC FEET PER SECOND, WATER YEAR OCTOBER 1971 TO SEPTEMBER 1972

DAY	OCT	NOV	DEC	JAN	FEB	MAR	APR	MAY	JUN	JUL	AUG	SEP
1			0	.26	.35	.21	.16	.08				
2			0	.26	.29	.22	.14	.07				
3			0	.28	.26	.22	.16	.07				
4			0	.24	.26	.24	.16	.08				
5			0	.24	.28	.23	.17	.09				
6			0	.23	.21	.23	.17	.09				
7			0	.23	.28	.21	.17	.08				
8			0	.23	.35	.19	.16	.07				
9			0	.23	.37	.16	.17	.06				
10			0	.23	.40	.16	.18	.05				
11			0	.23	.40	.16	.22	.05				
12			0	.26	.37	.16	.23	.04				
13			0	.26	.40	.15	.20	.02				
14			0	.26	.40	.14	.16	.02				
15			0	.25	.35	.12	.17	.03				
16			0	.25	.35	.12	.17	.02				
17			0	.23	.35	.13	.18	.04				
18			0	.23	.30	.12	.18	.05				
19			0	.23	.30	.12	.18	.04				
20			0	.24	.30	.11	.17	.03				
21			0	.30	.30	.11	.17	.02				
22			.10	.32	.26	.11	.17	.01				
23			.06	.35	.26	.10	.17	.01				
24			.97	.35	.26	.13	.17	.01				
25			.84	.35	.24	.13	.15	.01				
26			.21	.35	.23	.13	.10	0				
27			13	.34	.23	.12	.09	0				
28			1.1	.38	.22	.14	.09	0				
29			.41	.41	.23	.16	.09	0				
30			.31	.38	------	.15	.09	0				
31		------	.30	.36	------	.15	------	0	------			------
TOTAL	0	0	17.30	8.76	8.80	4.83	4.79	1.14	0	0	0	0
MEAN	0	0	.56	.28	.30	.16	.16	.037	0	0	0	0
MAX	0	0	13	.41	.40	.24	.23	.09	0	0	0	0
MIN	0	0	0	.23	.21	.10	.09	0	0	0	0	0
AC-FT	0	0	34	17	17	9.6	9.5	2.3	0	0	0	0

CAL YR 1971 TOTAL 76.46 MEAN .21 MAX 13 MIN 0 AC-FT 152
WTR YR 1972 TOTAL 45.62 MEAN .12 MAX 13 MIN 0 AC-FT 90

11118500 VENTURA RIVER NEAR VENTURA, CALIF.

LOCATION.--Lat 34°21'08", long 119°18'27", in southeast corner of Santa Ana Grant, Ventura County, on right bank 50 ft downstream from county road bridge at Foster Memorial Park, 0.2 mile downstream from Coyote Creek, and 5 miles north of Ventura.

DRAINAGE AREA.--188 sq mi.

PERIOD OF RECORD.--September 1911 to January 1914, October 1929 to current year; combined records of river and diversion, October 1932 to current year.

GAGE.--Water-stage recorder on river; water-stage recorder and Parshall flume on diversion. Datum of gage is 205.23 ft above mean sea level (Ventura County Flood Control bench mark). See WSP 1315-B for history of changes prior to Nov. 2, 1949. Nov. 2, 1949, to June 12, 1969, at site 450 ft downstream at datum 4.00 ft lower.

AVERAGE DISCHARGE (River only).--45 years (1911-13, 1929-72), 56.3 cfs (40,790 acre-ft per year); median of yearly mean discharges, 16 cfs (11,600 acre-ft per year).

(Combined river and diversion).--40 years, 65.8 cfs (47,670 acre-ft per year); median of yearly mean discharges, 23 cfs (16,700 acre-ft per year).

EXTREMES (River only).--Current year: Maximum discharge, 2,090 cfs Dec. 27 (gage height, 8.95 ft); no flow much of year.

Period of record: Maximum discharge, 58,000 cfs Jan. 25, 1969 (gage height, 24.3 ft, present datum, from floodmarks), from rating curve extended above 19,600 cfs on basis of contracted-opening measurement of maximum flow; no flow at times in many years.

(Combined flow).--Current year: Maximum discharge, 2,100 cfs Dec. 27; minimum daily, 2.8 cfs Sept. 14, 15, 29, 30.

Period of record: Maximum discharge, 58,000 cfs Jan. 25, 1969; minimum daily, 0.10 cfs Sept. 3, 4, 13, 1961.

REMARKS.--Records good. Flow partly regulated since March 1948 by Matilija Reservoir (capacity, 2,473 acre-ft) and since October 1959 by Casitas Reservoir (capacity, 267,000 acre-ft). Water diverted to Casitas Reservoir on Coyote Creek since January 1959. Diversion by city of Ventura for municipal supply began prior to 1911. Records of chemical analyses, water temperatures, and suspended-sediment discharge for the current year are published in Part 2 of this report. AVERAGE DISCHARGE (River only) represents flow to ocean regardless of upstream development. For records of combined discharge of river and Ventura City diversion, see following page.

DISCHARGE, IN CUBIC FEET PER SECOND, WATER YEAR OCTOBER 1971 TO SEPTEMBER 1972

DAY	OCT	NOV	DEC	JAN	FEB	MAR	APR	MAY	JUN	JUL	AUG	SEP
1		0	.08	16	6.6	1.7	1.2	.17	1.7			
2		0	.08	14	7.2	4.2	2.8	.13	1.2			
3		0	.04	12	8.6	1.9	.58	.14	1.6			
4		0	.07	11	6.3	3.7	.44	.04	1.8			
5		0	.06	5.2	6.7	5.0	.42	0	1.9			
6		0	.04	.72	8.3	5.0	.54	0	1.3			
7		0	.04	1.3	10	2.2	.48	0	.16			
8		0	.03	.99	5.9	3.7	.36	0	.39			
9		0	.04	2.0	6.0	8.0	1.5	0	0			
10		0	.04	3.8	9.0	6.0	4.3	0	0			
11		0	.06	3.8	9.2	2.4	.49	0	0			
12		0	.07	1.9	8.6	1.4	.79	0	0			
13		0	.09	1.8	7.2	1.3	.50	0	0			
14		0	.07	2.1	6.0	1.6	1.2	.19	0			
15		0	0	6.3	5.3	1.8	1.3	.51	0			
16		0	0	6.0	5.0	2.4	.56	0	0			
17		0	0	2.6	4.8	2.9	.55	0	0			
18		0	0	1.6	3.7	2.7	.69	0	0			
19		0	0	2.5	3.4	1.9	.38	.55	0			
20		0	0	5.1	5.4	1.9	.91	0	0			
21		0	0	4.2	6.0	1.8	.37	0	0			
22		0	12	4.1	3.9	1.1	.46	2.0	0			
23		0	6.2	3.3	3.4	1.2	1.8	4.0	0			
24		0	146	2.9	5.3	1.1	.27	4.2	0			
25		0	163	3.4	5.5	1.8	.17	5.1	0			
26		0	65	6.2	3.9	2.0	.09	3.9	0			
27		0	520	9.3	3.8	1.3	.08	3.6	0			
28		.05	66	5.7	2.9	1.1	.11	3.8	0			
29		.11	28	2.5	1.2	.95	.25	3.3	0			
30		.09	21	3.5	------	.73	.30	3.9	0			
31		------	15	5.4	------	.70	------	2.3	------			------
TOTAL	0	.25	1,043.01	151.21	169.1	75.48	23.89	37.83	10.05	0	0	0
MEAN	0	.008	33.6	4.88	5.83	2.43	.80	1.22	.34	0	0	0
MAX	0	.11	520	16	10	8.0	4.3	5.1	1.9	0	0	0
MIN	0	0	0	.72	1.2	.70	.08	0	0	0	0	0
AC-FT	0	.5	2,070	300	335	150	47	75	20	0	0	0

CAL YR 1971 TOTAL 3,566.90 MEAN 9.77 MAX 520 MIN 0 AC-FT 7,070
WTR YR 1972 TOTAL 1,510.82 MEAN 4.13 MAX 520 MIN 0 AC-FT 3,000

PEAK DISCHARGE (BASE, 500 CFS).--Dec. 25 (1830) 810 cfs (7.06 ft); Dec. 27 (0630) 2,090 cfs (8.95 ft).

11118500 VENTURA RIVER NEAR VENTURA, CALIF.--Continued

COMBINED DISCHARGE, IN CUBIC FEET PER SECOND, OF VENTURA RIVER AND VENTURA CITY DIVERSION NEAR VENTURA, CALIF., WATER YEAR OCTOBER 1971 TO SEPTEMBER 1972

DAY	OCT	NOV	DEC	JAN	FEB	MAR	APR	MAY	JUN	JUL	AUG	SEP
1	8.3	5.9	4.6	20	18	16	13	11	10	7.0	4.8	3.8
2	8.1	5.8	4.5	20	17	17	15	12	9.3	7.0	4.9	3.7
3	7.9	5.7	4.5	20	17	18	15	12	9.6	6.9	4.9	3.7
4	7.8	5.7	4.5	19	19	20	13	10	9.2	6.7	5.1	3.7
5	7.6	5.6	4.5	16	21	18	14	13	9.9	6.7	5.1	3.6
6	7.4	5.6	4.4	12	19	15	12	9.9	9.9	6.6	4.9	3.5
7	6.6	5.6	4.3	14	18	14	13	11	10	6.6	4.9	3.5
8	6.7	5.6	4.4	12	19	17	11	11	9.5	6.6	4.8	3.4
9	6.9	5.4	4.1	10	19	17	11	11	9.4	6.5	4.8	3.5
10	6.7	5.0	3.9	13	17	15	18	11	9.8	6.5	4.6	3.4
11	6.7	4.2	4.1	14	17	12	10	11	9.7	6.3	4.7	3.4
12	6.7	4.4	4.1	15	18	13	12	11	9.4	6.2	4.7	3.4
13	6.7	4.3	4.2	13	18	13	12	12	9.3	6.2	4.4	3.4
14	6.6	4.3	4.9	10	18	14	11	11	8.8	6.1	4.6	2.8
15	6.6	3.7	5.0	15	18	13	12	15	8.1	6.0	4.6	2.8
16	6.6	3.4	4.9	19	17	14	14	10	8.1	5.9	4.5	3.4
17	6.5	4.2	4.8	16	18	14	10	12	8.0	5.9	4.4	3.3
18	6.5	4.8	4.8	13	18	14	14	10	8.1	5.8	4.4	3.3
19	6.3	4.8	4.7	13	16	12	10	11	8.0	5.7	4.4	3.2
20	6.2	4.7	4.7	15	16	15	13	12	8.1	5.6	4.3	3.1
21	6.1	4.7	4.6	15	17	14	11	10	8.1	5.6	4.2	3.1
22	6.0	4.4	17	15	18	15	11	11	7.8	5.6	4.1	3.1
23	6.0	3.8	12	16	16	13	13	12	7.8	5.3	4.1	2.9
24	6.0	4.3	151	15	17	12	10	12	7.6	4.5	4.2	2.9
25	6.0	4.7	167	14	18	15	12	13	7.6	4.5	4.1	3.0
26	5.9	4.7	73	15	16	14	10	11	7.4	4.7	4.0	3.0
27	5.9	4.6	529	17	17	13	12	11	7.4	5.4	4.0	2.9
28	5.9	4.6	75	23	18	15	12	10	7.3	5.8	3.9	2.9
29	5.9	4.7	37	19	15	15	11	9.4	7.2	5.7	3.5	2.8
30	5.9	4.6	29	18	------	15	11	10	7.2	5.3	3.9	2.8
31	5.9	------	20	17	------	14	------	9.7	------	5.0	3.4	------
TOTAL	204.9	143.8	1,204.5	483	510	456	366	346.0	257.6	184.2	137.2	97.3
MEAN	6.61	4.79	38.9	15.6	17.6	14.7	12.2	11.2	8.59	5.94	4.43	3.24
MAX	8.3	5.9	529	23	21	20	18	15	10	7.0	5.1	3.8
MIN	5.9	3.4	3.9	10	15	12	10	9.4	7.2	4.5	3.4	2.8
AC-FT	406	285	2,390	958	1,010	904	726	686	511	365	272	193

CAL YR 1971 TOTAL 6,050.1 MEAN 16.6 MAX 529 MIN 3.4 AC-FT 12,000
WTR YR 1972 TOTAL 4,390.5 MEAN 12.0 MAX 529 MIN 2.8 AC-FT 8,710

PEAK DISCHARGE (BASE, 500 CFS).--Dec. 25 (1830) 814 cfs; Dec. 27 (0630) 2,100 cfs.

11119500 CARPINTERIA CREEK NEAR CARPINTERIA, CALIF.

LOCATION.--Lat 34°24'05", long 119°29'10", in El Rincon Grant, Santa Barbara County, on right bank at downstream side of bridge on State Highway 150, 235 ft downstream from Gobernador Creek, and 1.8 miles northeast of Carpinteria.

DRAINAGE AREA.--13.1 sq mi.

PERIOD OF RECORD.--January 1941 to current year.

GAGE.--Water-stage recorder. Altitude of gage is 130 ft (from topographic map). Prior to July 1, 1958, at datum 6.00 ft higher. July 2, 1958, to Aug. 27, 1970, at site 35 ft upstream at datum 4.00 ft higher.

AVERAGE DISCHARGE.--31 years, 2.84 cfs (2,060 acre-ft per year); median of yearly mean discharges, 0.5 cfs (360 acre-ft per year).

EXTREMES.--Current year: Maximum discharge, 8,880 cfs Dec. 27 (gage height, 14.10 ft, from floodmark); no flow most of year.
Period of record: Maximum discharge, 8,880 cfs Dec. 27, 1971 (gage height, 14.10 ft, from floodmark), from rating curve extended above 130 cfs on basis of slope-area measurement of maximum flow; no flow at times in each year.

REMARKS.--Records good. No regulation above station. Gobernador Land and Water Co. diverts from Gobernador Creek 1.8 miles above station. Small lake 0.8 mile southeast of station and outside the drainage area stores storm runoff and surplus water diverted by Gobernador Land and Water Co. from Gobernador Creek. At times this lake is drained by pumping water back into Gobernador Creek 1,000 ft above station.

DISCHARGE, IN CUBIC FEET PER SECOND, WATER YEAR OCTOBER 1971 TO SEPTEMBER 1972

DAY	OCT	NOV	DEC	JAN	FEB	MAR	APR	MAY	JUN	JUL	AUG	SEP
1	0		0	1.6	.37	.28	.14	.12	.07	.04	0	.35
2	0		0	1.6	.32	.25	.15	.12	.07	.05	0	0
3	0		0	1.8	.35	.19	.14	.13	.06	.04	0	0
4	0		0	1.6	.35	.23	.15	.13	.06	.04	0	0
5	0		0	1.5	2.0	.24	.13	.18	.07	.03	0	0
6	0		0	1.4	.53	.27	.14	.16	.08	.02	0	0
7	0		0	1.3	.50	.39	.22	.17	.09	.03	0	0
8	0		0	1.2	.34	.39	.04	.15	.10	.03	0	0
9	0		0	1.1	.38	.27	.07	.16	.11	.03	0	0
10	.35		0	1.0	.32	.30	.16	.14	.07	.03	0	0
11	0		0	.90	.26	.23	.31	.13	.05	.03	0	0
12	0		0	3.3	.29	.09	.30	.13	.05	.03	0	0
13	0		0	5.0	.28	.07	.15	.11	.04	.03	0	0
14	0		0	5.1	.25	.07	.01	.10	.05	.05	0	0
15	0		0	4.7	.28	.07	.05	.11	.04	.05	0	0
16	0		0	4.3	.26	.19	.15	.13	.05	.05	0	0
17	0		0	1.2	.35	.24	.07	.14	.04	.04	0	0
18	0		0	.83	.36	.29	.10	.12	.05	.05	0	0
19	0		0	.45	.35	.24	.07	.12	.05	.07	0	0
20	0		0	.47	.37	.24	.08	.11	.05	.07	0	0
21	0		0	.41	.35	.23	.03	.16	.05	.07	0	0
22	0		7.4	.47	.31	.21	.02	.11	.05	.06	0	0
23	0		2.0	.47	.35	.18	0	.11	.05	.04	0	0
24	0		113	.40	.27	.17	.02	.11	.06	.03	0	0
25	0		63	.48	.36	.17	.06	.11	.07	.03	0	0
26	0		11	.53	.34	.19	.08	.10	.06	.02	0	0
27	0		563	1.1	.32	.17	.10	.09	.04	.02	0	0
28	0		13	.58	.29	.17	.11	.07	.04	.03	.02	0
29	0		6.4	.42	.32	.17	.11	.06	.03	.03	.04	0
30	0		3.8	.38	------	.16	.11	.06	.04	.03	.05	0
31	0	------	2.1	.35	------	.12	------	.06	------	0	.09	------
TOTAL	.35	0	784.7	45.94	11.42	6.48	3.27	3.70	1.74	1.17	.20	.35
MEAN	.011	0	25.3	1.48	.39	.21	.11	.12	.058	.038	.007	.012
MAX	.35	0	563	5.1	2.0	.39	.31	.18	.11	.07	.09	.35
MIN	0	0	0	.35	.25	.07	0	.06	.03	0	0	0
AC-FT	.7	0	1,560	91	23	13	6.5	7.3	3.5	2.3	.4	.7

CAL YR 1971 TOTAL 862.91 MEAN 2.36 MAX 563 MIN 0 AC-FT 1,710
WTR YR 1972 TOTAL 859.32 MEAN 2.35 MAX 563 MIN 0 AC-FT 1,700

PEAK DISCHARGE (BASE, 125 CFS)

DATE	TIME	G.H.	DISCHARGE	DATE	TIME	G.H.	DISCHARGE
12-24	1215	5.27	515	12-27	0600	14.10	8,880
12-25	1530	4.87	323				

11119530 FRANKLIN CREEK AT CARPINTERIA, CALIF.

LOCATION.--Lat 34°24'15", long 119°31'05", in Pueblo Lands of Santa Barbara, Santa Barbara County, on right bank 300 ft downstream from Malibu Drive bridge, 0.5 mile north of Carpinteria.

DRAINAGE AREA.--1.81 sq mi.

PERIOD OF RECORD.--October 1970 to current year.

GAGE.--Water-stage recorder. Altitude of gage is 30 ft (from topographic map).

EXTREMES.--Current year: Maximum discharge, 1,600 cfs Dec. 27 (gage height, 6.1 ft, from floodmark); minimum daily, 0.07 cfs Dec. 10-21, June 18-30.
Period of record: Maximum discharge, 1,600 cfs Dec. 27, 1971 (gage height, 6.1 ft, from floodmark); minimum daily, 0.01 cfs Oct. 1 to Nov. 24, 1970.

REMARKS.--Records poor. No regulation or diversion above station.

COOPERATION.--Gage-height record furnished by Santa Barbara County Flood Control and Water Conservation District.

DISCHARGE, IN CUBIC FEET PER SECOND, WATER YEAR OCTOBER 1971 TO SEPTEMBER 1972

DAY	OCT	NOV	DEC	JAN	FEB	MAR	APR	MAY	JUN	JUL	AUG	SEP
1	.25	.11	.08	.40	.22	.09	.16	.12	.10	.08	.09	.10
2	.21	.11	.08	.35	.20	.08	.16	.12	.10	.08	.09	.10
3	.20	.11	.08	.33	.18	.08	.16	.12	.09	.08	.09	.10
4	.22	.10	.08	.31	.16	.10	.16	.12	.09	.08	.10	.10
5	.12	.10	.08	.30	.14	.40	.16	.12	.09	.08	.10	.10
6	.16	.10	.08	.29	.16	.25	.15	.12	.10	.08	.10	.10
7	.19	.10	.08	.28	.21	.23	.15	.12	.10	.08	.10	.10
8	.18	.10	.08	.27	.21	.22	.15	.12	.10	.08	.10	.10
9	.18	.10	.08	.26	.21	.21	.16	.12	.10	.08	.10	.10
10	.17	.10	.07	.25	.21	.20	.18	.12	.09	.08	.10	.10
11	.17	.14	.07	.25	.21	.19	.16	.12	.09	.08	.10	.10
12	.16	.10	.07	.25	.20	.21	.15	.12	.09	.08	.10	.10
13	.16	.10	.07	.25	.21	.21	.15	.12	.09	.08	.10	.10
14	.15	.10	.07	.25	.20	.21	.15	.12	.08	.08	.10	.10
15	.15	.10	.07	.25	.21	.21	.14	.13	.08	.08	.10	.10
16	.15	.10	.07	.24	.21	.21	.14	.13	.08	.08	.10	.10
17	.15	.10	.07	.24	.21	.21	.14	.13	.08	.08	.10	.10
18	.14	.10	.07	.24	.20	.21	.14	.13	.07	.08	.10	.09
19	.14	.10	.07	.24	.21	.20	.13	.12	.07	.09	.10	.09
20	.14	.10	.07	.23	.21	.21	.13	.12	.07	.09	.10	.09
21	.14	.09	.07	.23	.20	.19	.13	.12	.07	.09	.10	.09
22	.14	.09	5.1	.23	.21	.18	.13	.12	.07	.09	.10	.09
23	.13	.09	.70	.23	.21	.17	.13	.12	.07	.09	.10	.09
24	.13	.09	8.3	.23	.21	.16	.13	.12	.07	.09	.10	.09
25	.13	.09	11	.23	.17	.16	.12	.12	.07	.09	.10	.09
26	.12	.09	5.7	.22	.15	.16	.12	.12	.07	.09	.10	.09
27	.12	.09	121	.22	.13	.16	.12	.12	.07	.09	.10	.09
28	.12	.09	9.7	.22	.11	.16	.12	.11	.07	.09	.10	.09
29	.12	.09	3.7	.22	.10	.16	.12	.11	.07	.09	.10	.09
30	.12	.08	1.5	.22	------	.16	.12	.11	.07	.09	.10	.09
31	.11	------	.70	.22	------	.16	------	.10	------	.09	.10	------
TOTAL	4.77	2.96	168.96	7.95	5.46	5.75	4.26	3.71	2.46	2.61	3.07	2.87
MEAN	.15	.099	5.45	.26	.19	.19	.14	.12	.082	.084	.099	.096
MAX	.25	.14	121	.40	.22	.40	.18	.13	.10	.09	.10	.10
MIN	.11	.08	.07	.22	.10	.08	.12	.10	.07	.08	.09	.09
AC-FT	9.5	5.9	335	16	11	11	8.5	7.4	4.9	5.2	6.1	5.7

CAL YR 1971 TOTAL 237.39 MEAN .65 MAX 121 MIN .04 AC-FT 471
WTR YR 1972 TOTAL 214.83 MEAN .59 MAX 121 MIN .07 AC-FT 426

11119700 SYCAMORE CREEK AT SANTA BARBARA, CALIF.

LOCATION.--Lat 34°25'45", long 119°40'35", in Pueblo Lands of Santa Barbara, Santa Barbara County, on left bank at intersection of Sycamore Canyon Road and Alameda Padre Serra in Santa Barbara.

DRAINAGE AREA.--3.41 sq mi.

PERIOD OF RECORD.--October 1970 to September 1972 (discontinued).

GAGE.--Water-stage recorder. Altitude of gage is 55 ft (from topographic map).

EXTREMES.--Current year: Maximum discharge, 270 cfs Dec. 27 (gage height, 2.71 ft); no flow July 14 to Sept. 30. Period of record: Maximum discharge, 270 cfs Dec. 27, 1971 (gage height, 2.71 ft); no flow July 14 to Sept. 30, 1972.

REMARKS.--Records poor except those above 5 cfs, which are fair. At times Sheffield Reservoir water is wasted to channel.

COOPERATION.--Gage-height record furnished by Santa Barbara County Flood Control and Water Conservation District.

DISCHARGE, IN CUBIC FEET PER SECOND, WATER YEAR OCTOBER 1971 TO SEPTEMBER 1972

DAY	OCT	NOV	DEC	JAN	FEB	MAR	APR	MAY	JUN	JUL	AUG	SEP
1	.25	.16	.15	.68	.20	.45	.06	2.2	.08	.04		
2	.25	.16	.15	.57	.30	.25	.06	2.3	.08	.04		
3	.25	.16	.15	.46	1.4	.19	.09	2.3	.08	.04		
4	.25	.15	.15	.37	.13	.13	3.1	2.3	.07	.04		
5	.25	.15	.15	.33	1.1	.13	3.2	2.5	.07	.04		
6	.25	.15	.15	.31	.28	2.1	3.4	2.4	.07	.02		
7	.25	.25	.15	.29	.23	.20	3.5	2.3	.07	.02		
8	.25	.20	.14	.27	.26	.20	3.7	2.4	.07	.02		
9	.25	.18	.14	.26	.26	.20	3.7	2.4	.07	.02		
10	.25	.17	.14	.25	.26	.19	3.8	2.2	.07	.02		
11	.25	.17	.14	.24	.26	.19	5.0	2.0	.06	.02		
12	.25	.16	.14	.23	.25	.19	4.8	1.1	.06	.02		
13	.25	.16	.13	.22	.25	.26	4.1	.83	.06	.02		
14	.25	.16	.13	.22	.25	.26	3.6	1.3	.06	0		
15	.25	.16	.13	.21	.25	.19	3.7	1.8	.06	0		
16	.24	.16	.13	.21	.25	.13	3.6	1.8	.06	0		
17	.23	.16	.13	.20	.25	.13	3.6	2.0	.06	0		
18	.23	.16	.13	.20	.25	.13	4.0	2.6	.06	0		
19	.22	.16	.12	.20	.25	.13	3.8	2.6	.05	0		
20	.22	.16	.12	.20	.25	.13	3.9	2.0	.05	0		
21	.22	.16	.12	.20	.25	.13	4.1	1.5	.05	0		
22	.21	.16	3.9	.20	.25	.13	3.9	.87	.05	0		
23	.21	.16	.33	.20	.25	.09	3.7	1.4	.05	0		
24	.20	.16	3.2	.20	.25	.09	3.7	2.1	.05	0		
25	.20	.16	11	.57	.25	.09	3.7	1.7	.05	0		
26	.19	.15	5.0	1.7	.40	.08	3.5	1.8	.05	0		
27	.19	.15	61	.22	1.6	.08	3.5	.08	.05	0		
28	.18	.15	5.1	.21	1.9	.08	3.6	.08	.04	0		
29	.18	.15	2.5	.20	.45	.07	3.1	.08	.04	0		
30	.17	.15	1.5	.20	------	.06	2.3	.08	.04	0		
31	.17	------	1.0	.20	------	.06	------	.08	------	0		------
TOTAL	7.01	4.89	97.42	10.02	12.53	6.74	99.81	51.10	1.78	.36	0	0
MEAN	.23	.16	3.14	.32	.43	.22	3.33	1.65	.059	.012	0	0
MAX	.25	.25	61	1.7	1.9	2.1	5.0	2.6	.08	.04	0	0
MIN	.17	.15	.12	.20	.13	.06	.06	.08	.04	0	0	0
AC-FT	14	9.7	193	20	25	13	198	101	3.5	.7	0	0

CAL YR 1971 TOTAL 216.46 MEAN .59 MAX 61 MIN .10 AC-FT 429
WTR YR 1972 TOTAL 291.66 MEAN .80 MAX 61 MIN 0 AC-FT 579

PEAK DISCHARGE (BASE, 50 CFS).--Dec. 27 (0445) 270 cfs (2.71 ft).

11119750 MISSION CREEK NEAR MISSION STREET, AT SANTA BARBARA, CALIF.

LOCATION.--Lat 34°25'35", long 119°43'20", in Pueblo Lands of Santa Barbara, Santa Barbara County, on left bank just south of end of Los Olivos Street in Santa Barbara.

DRAINAGE AREA.--8.38 sq mi.

PERIOD OF RECORD.--October 1970 to current year.

GAGE.--Water-stage recorder. Concrete-lined channel. Altitude of gage is 105 ft (from topographic map).

EXTREMES.--Current year: Maximum discharge, 1,420 cfs Dec. 27 (gage height, 3.77 ft); no flow most of year. Period of record: Maximum discharge, 1,420 cfs Dec. 27, 1971 (gage height, 3.77 ft); no flow most of each year.

REMARKS.--Records good except those for period of no gage-height record, which are poor. No regulation or diversion above station.

COOPERATION.--Gage-height record furnished by Santa Barbara County Flood Control and Water Conservation District.

DISCHARGE, IN CUBIC FEET PER SECOND, WATER YEAR OCTOBER 1971 TO SEPTEMBER 1972

DAY	OCT	NOV	DEC	JAN	FEB	MAR	APR	MAY	JUN	JUL	AUG	SEP
1		0	0	.41								
2		0	0	.25								
3		0	0	.10								
4		0	0	.05								
5		0	0	0								
6		0	0	0								
7		0	0	0								
8		0	0	0								
9		0	0	0								
10		0	0	0								
11		6.0	0	0								
12		1.5	0	0								
13		.45	0	0								
14		.15	0	0								
15		.07	0	0								
16		.03	0	0								
17		0	0	0								
18		0	0	0								
19		0	0	0								
20		0	0	0								
21		0	0	0								
22		0	19	0								
23		0	2.8	0								
24		0	23	0								
25		0	100	0								
26		0	37	0								
27		0	245	0								
28		0	2.0	0								
29		0	1.5	0								
30		0	1.0	0	------							
31		------	.75	0	------		------		------			------
TOTAL	0	8.20	432.05	.81	0	0	0	0	0	0	0	0
MEAN	0	.27	13.9	.026	0	0	0	0	0	0	0	0
MAX	0	6.0	245	.41	0	0	0	0	0	0	0	0
MIN	0	0	0	0	0	0	0	0	0	0	0	0
AC-FT	0	16	857	1.6	0	0	0	0	0	0	0	0

CAL YR 1971 TOTAL 486.85 MEAN 1.33 MAX 245 MIN 0 AC-FT 966
WTR YR 1972 TOTAL 441.06 MEAN 1.21 MAX 245 MIN 0 AC-FT 875

PEAK DISCHARGE (BASE, 100 CFS).--Dec. 27 (0400) 1,420 cfs (3.77 ft).

NOTE.--No gage-height record Oct. 1 to Dec. 8.

11119760 VICTORIA STREET DRAIN AT OUTLET, NEAR SANTA BARBARA, CALIF.

LOCATION.--Lat 34°25'09", long 119°42'36", in Pueblo Lands of Santa Barbara, Santa Barbara County, on right downstream end of culvert at west end of Victoria Street in Santa Barbara.

DRAINAGE AREA.--0.625 sq mi.

PERIOD OF RECORD.--October 1970 to current year.

GAGE.--Water-stage recorder and culvert control with rain-gage attachment. Datum of gage is 58.69 ft above mean sea level (Santa Barbara County Flood Control and Water Conservation District bench mark).

EXTREMES.--Current year: Maximum discharge, 68 cfs Dec. 27 (gage height, 2.88 ft); no flow most of year.
Period of record: Maximum discharge, 68 cfs Dec. 27, 1971 (gage height, 2.88 ft); no flow most of each year.
Flood of Jan. 25, 1969, reached a stage of 4.26 ft, from floodmark (discharge, 178 cfs).

REMARKS.--Records good. Flow is from street drainage (area of 399 acres). During periods of heavy rainfall flood gates on the upper end of this watershed could be closed which would reduce the drainage area by 140 acres.

DISCHARGE, IN CUBIC FEET PER SECOND, WATER YEAR OCTOBER 1971 TO SEPTEMBER 1972

DAY	OCT	NOV	DEC	JAN	FEB	MAR	APR	MAY	JUN	JUL	AUG	SEP
1		0	0	0	0		0					
2		0	.09	0	0		0					
3		0	0	0	0		0					
4		0	0	0	.50		0					
5		0	0	0	1.6		0					
6		0	0	0	0		0					
7		0	0	0	0		0					
8		0	0	0	0		0					
9		0	0	0	0		0					
10		0	0	0	0		.15					
11		1.6	0	0	0		.53					
12		0	.34	0	0		0					
13		0	0	0	0		0					
14		0	0	0	0		0					
15		0	0	0	0		0					
16		0	0	0	0		0					
17		0	0	0	0		0					
18		0	0	0	0		0					
19		0	0	0	0		0					
20		0	0	0	0		0					
21		0	.12	0	0		0					
22		0	7.0	0	0		0					
23		0	1.1	0	0		0					
24		0	4.9	0	0		0					
25		0	5.4	0	0		0					
26		0	3.1	0	0		0					
27		0	11	.87	0		0					
28		0	2.7	0	0		0					
29		0	.76	0	0		0					
30		0	0	0	------		0					
31		------	0	0	------		------		------			------
TOTAL	0	1.6	36.51	.87	2.10	0	.68	0	0	0	0	0
MEAN	0	.053	1.18	.028	.072	0	.023	0	0	0	0	0
MAX	0	1.6	11	.87	1.6	0	.53	0	0	0	0	0
MIN	0	0	0	0	0	0	0	0	0	0	0	0
AC-FT	0	3.2	72	1.7	4.2	0	1.3	0	0	0	0	0
(a)	0	.45	6.50	.10	.50	0	.2	0	0	0	0	0

CAL YR 1971 TOTAL 54.46 MEAN .15 MAX 11 MIN 0 AC-FT 108
WTR YR 1972 TOTAL 41.76 MEAN .11 MAX 11 MIN 0 AC-FT 83

a Precipitation, in inches.

11119780 ARROYO BURRO CREEK AT SANTA BARBARA, CALIF.

LOCATION.--Lat 34°26'13", long 119°44'44", in Pueblo Lands of Santa Barbara, Santa Barbara County, on right bank 0.4 mile south of State Street on Hope Avenue in Santa Barbara.

DRAINAGE AREA.--6.65 sq mi.

PERIOD OF RECORD.--October 1970 to current year.

GAGE.--Water-stage recorder. Concrete-lined channel. Altitude of gage is 160 ft (from topographic map).

EXTREMES.--Current year: Maximum discharge, 362 cfs Dec. 27 (gage height, 2.68 ft); no flow most of year. Period of record: Maximum discharge, 680 cfs Dec. 21, 1970 (gage height, 3.46 ft); no flow most of each year.

REMARKS.--Records fair. Small amount of inflow may occur from large shopping center that empties water from its air conditioning unit directly into the stream. Partial regulation by Lauro Canyon Reservoir on San Roque Creek.

COOPERATION.--Gage-height record furnished by Santa Barbara County Flood Control and Water Conservation District.

DISCHARGE, IN CUBIC FEET PER SECOND, WATER YEAR OCTOBER 1971 TO SEPTEMBER 1972

DAY	OCT	NOV	DEC	JAN	FEB	MAR	APR	MAY	JUN	JUL	AUG	SEP
1	0	0	0	.11	.02	.02	0	0	0	.01	0	0
2	0	0	0	.09	0	.02	0	0	0	.01	0	0
3	0	0	0	.06	0	.02	0	0	0	.01	0	0
4	0	0	0	.04	0	.02	0	0	0	0	0	.01
5	0	0	0	.03	1.3	.02	0	0	0	0	0	.01
6	0	0	0	0	.06	.02	0	0	0	0	0	0
7	0	0	0	0	.06	.02	0	0	.01	0	0	0
8	0	0	0	0	.03	.02	0	0	.01	0	0	0
9	0	0	0	0	.01	.02	0	0	.01	0	0	0
10	0	0	0	0	.01	.02	0	0	0	0	0	0
11	0	2.1	0	0	.01	.02	.92	0	0	0	0	0
12	.02	.37	0	0	.01	.02	.93	0	0	0	0	0
13	.03	.03	0	0	.01	.02	.77	0	0	0	0	0
14	.03	.03	0	0	.01	.02	.63	0	0	0	0	0
15	.04	0	0	0	.01	.02	.37	0	0	0	0	0
16	.11	0	0	0	.01	.02	.28	0	0	0	0	0
17	.17	0	0	0	.01	.02	.26	0	0	0	0	0
18	.06	0	0	0	.01	.02	.20	0	0	0	0	0
19	.06	0	0	0	.01	.02	.17	.14	.01	0	0	0
20	.02	0	0	0	.01	.02	.11	.29	.01	0	0	.01
21	0	0	.06	0	.02	.01	.11	.19	.01	0	0	.03
22	0	0	22	0	.02	.01	.07	.14	.01	0	.01	.03
23	0	0	.26	0	.02	.01	.06	.06	.01	0	.01	.03
24	0	0	12	0	.02	.01	.06	.05	.01	0	0	.03
25	0	0	22	0	.02	.01	.03	.03	.01	0	0	.01
26	0	0	18	0	.02	.01	.03	.01	.01	0	0	0
27	0	0	82	.12	.02	.01	.03	0	.01	0	0	0
28	0	0	2.1	.11	.02	0	.01	0	.01	0	0	0
29	0	0	.51	.07	.02	0	0	0	.01	0	0	0
30	0	0	.37	.06	------	0	0	0	.01	0	0	0
31	0	------	.26	.03	------	0	------	0	------	0	0	------
TOTAL	.54	2.53	159.56	.72	1.77	.47	5.04	.91	.15	.03	.02	.16
MEAN	.017	.084	5.15	.023	.061	.015	.17	.029	.005	.001	.0006	.005
MAX	.17	2.1	82	.12	1.3	.02	.93	.29	.01	.01	.01	.03
MIN	0	0	0	0	0	0	0	0	0	0	0	0
AC-FT	1.1	5.0	316	1.4	3.5	.9	10	1.8	.3	.06	.04	.3

CAL YR 1971 TOTAL 244.99 MEAN .67 MAX 82 MIN 0 AC-FT 486
WTR YR 1972 TOTAL 171.90 MEAN .47 MAX 82 MIN 0 AC-FT 341

PEAK DISCHARGE (BASE, 100 CFS)

DATE	TIME	G.H.	DISCHARGE	DATE	TIME	G.H.	DISCHARGE
12-25	2015	2.21	213	12-27	0400	2.68	362
12-26	2330	2.40	270				

11119900 ATASCADERO CREEK AT PUENTE ROAD, NEAR GOLETA, CALIF.

LOCATION.--Lat 34°25'56", long 119°47'00", in Pueblo Lands of Santa Barbara, Santa Barbara County, on right bank on Puente Drive, 0.4 mile south of Hollister Avenue, and 2.4 miles east of Goleta.

DRAINAGE AREA.--3.86 sq mi.

PERIOD OF RECORD.--October 1970 to September 1972 (discontinued).

GAGE.--Water-stage recorder. Altitude of gage is 40 ft (from topographic map).

EXTREMES.--Current year: Maximum discharge, 248 cfs Dec. 27 (gage height, 2.16 ft); no flow for several days. Period of record: Maximum discharge, 470 cfs Nov. 29, 1970 (gage height, 2.83 ft); no flow for several days in each year.

REMARKS.--Records poor. No regulation or diversion.

COOPERATION.--Gage-height record furnished by Santa Barbara County Flood Control and Water Conservation District.

DISCHARGE, IN CUBIC FEET PER SECOND, WATER YEAR OCTOBER 1971 TO SEPTEMBER 1972

DAY	OCT	NOV	DEC	JAN	FEB	MAR	APR	MAY	JUN	JUL	AUG	SEP
1	.04	.04	.04	.04	.03	0	0	.04	.04	.04	.04	.04
2	.04	.04	.03	.04	0	0	0	.04	.04	.04	.04	.04
3	.04	.04	.04	.04	.04	.04	0	.04	.04	.04	.04	.04
4	0	.04	.04	.04	0	0	.16	.04	.04	.04	.04	.04
5	0	.04	.04	.04	.08	0	0	.04	.04	.04	.04	.04
6	0	.08	.04	.04	.04	.04	0	.04	.04	.04	.04	.04
7	.04	.08	.04	.04	.04	0	0	.04	.04	.04	.04	0
8	.04	.08	.04	.04	.04	0	.04	.04	.04	.04	.04	0
9	.04	.08	.04	.04	.04	0	.04	.04	.04	.04	.04	0
10	.04	.16	.12	.04	.04	0	.04	.04	.04	.04	.04	0
11	.03	8.8	.12	.04	.04	0	.04	.04	.04	.04	.04	0
12	.04	7.9	.08	.04	.04	0	.04	.04	.04	.04	.04	0
13	.07	.04	.03	.04	.04	0	.04	0	.04	.04	.04	0
14	.08	.04	.02	.04	0	0	.04	0	.04	.04	.04	0
15	.08	0	.04	.04	0	0	.04	0	.04	.04	.04	0
16	.09	.04	.06	.04	.04	0	.04	.04	.04	.04	.04	0
17	.09	.04	.08	.04	0	0	.04	.04	.04	.04	.04	0
18	.09	.04	.04	.04	.03	0	.04	.04	.04	.04	.04	0
19	.11	.04	0	.04	0	0	.04	.04	.04	.04	.04	0
20	.09	.04	0	.04	0	0	.04	.04	.04	.04	.04	0
21	.10	.04	.09	.04	.05	0	.04	.04	.04	.04	.04	0
22	.15	.04	46	.04	0	0	.04	.04	.04	.04	.04	0
23	.12	.04	.58	.04	.04	0	0	.04	.04	.04	.04	.04
24	.12	.04	17	.04	0	0	.04	.04	.04	.04	.04	.04
25	.13	.04	12	0	0	0	.04	.04	.04	.04	.04	.04
26	.17	.04	20	0	0	0	.04	.04	.04	.04	.04	.04
27	.19	.04	60	.04	0	0	.04	.04	.04	.04	.04	.04
28	.12	.04	.08	.04	0	0	.08	.04	.04	.04	.04	.04
29	.08	.04	.04	.04	.05	0	.12	.04	.04	.04	.04	.04
30	.06	.04	.04	.04	------	0	.08	.04	.04	.04	.04	.04
31	.04	------	.04	.04	------	0	------	.04	------	.04	.80	------
TOTAL	2.33	18.06	156.81	1.16	.68	.08	1.20	1.12	1.20	1.24	2.00	.56
MEAN	.075	.60	5.06	.037	.023	.003	.040	.036	.040	.040	.065	.019
MAX	.19	8.8	60	.04	.08	.04	.16	.04	.04	.04	.80	.04
MIN	0	0	0	0	0	0	0	0	.04	.04	.04	0
AC-FT	4.6	36	311	2.3	1.3	.2	2.4	2.2	2.4	2.5	4.0	1.1

CAL YR 1971 TOTAL 240.91 MEAN .66 MAX 60 MIN 0 AC-FT 478
WTR YR 1972 TOTAL 186.44 MEAN .51 MAX 60 MIN 0 AC-FT 370

11119940 MARIA YGNACIO CREEK AT UNIVERSITY DRIVE, NEAR GOLETA, CALIF.

LOCATION.--Lat 34°26'42", long 119°48'10", in Goleta Grant, Santa Barbara County, on right bank at University Drive, 0.2 mile east of Patterson Avenue, and 1.5 miles northeast of Goleta.

DRAINAGE AREA.--6.35 sq mi.

PERIOD OF RECORD.--October 1970 to current year.

GAGE.--Water-stage recorder. Altitude of gage is 60 ft (from topographic map).

EXTREMES.--Current year: Maximum discharge, 240 cfs Dec. 27 (gage height, 2.14 ft); no flow most of year. Period of record: Maximum discharge, 255 cfs Nov. 29, 1970 (gage height, 2.17 ft); no flow most of each year.

REMARKS.--Records good above 1.0 cfs and fair below. No regulation. Some pumping for irrigation.

COOPERATION.--Gage-height record furnished by Santa Barbara County Flood Control and Water Conservation District.

DISCHARGE, IN CUBIC FEET PER SECOND, WATER YEAR OCTOBER 1971 TO SEPTEMBER 1972

DAY	OCT	NOV	DEC	JAN	FEB	MAR	APR	MAY	JUN	JUL	AUG	SEP
1		0	0	.20	0							
2		0	0	.15	0							
3		0	0	.10	0							
4		0	0	.05	0							
5		0	0	.03	.30							
6		0	0	.02	.03							
7		0	0	.01	.03							
8		0	0	0	.03							
9		0	0	0	.03							
10		0	0	0	.03							
11		.13	0	0	.03							
12		.05	0	0	.03							
13		.03	0	0	.03							
14		.01	0	0	.03							
15		0	0	0	.03							
16		0	0	0	.03							
17		0	0	0	.03							
18		0	0	0	.03							
19		0	0	0	0							
20		0	0	0	0							
21		0	.04	0	0							
22		0	4.5	0	0							
23		0	.80	0	0							
24		0	6.0	0	0							
25		0	22	0	0							
26		0	13	0	0							
27		0	58	0	0							
28		0	15	0	0							
29		0	6.5	0	0							
30		0	.70	0	------							
31		------	.25	0	------		------		------			------
TOTAL	0	.22	126.79	.56	.69	0	0	0	0	0	0	0
MEAN	0	.007	4.09	.018	.024	0	0	0	0	0	0	0
MAX	0	.13	58	.20	.30	0	0	0	0	0	0	0
MIN	0	0	0	0	0	0	0	0	0	0	0	0
AC-FT	0	.4	251	1.1	1.4	0	0	0	0	0	0	0

CAL YR 1971 TOTAL 138.63 MEAN .38 MAX 58 MIN 0 AC-FT 275
WTR YR 1972 TOTAL 128.26 MEAN .35 MAX 58 MIN 0 AC-FT 254

PEAK DISCHARGE (BASE, 75 CFS).--Dec. 25 (1415) 88 cfs (1.76 ft); Dec. 27 (0345) 240 cfs (2.14 ft).

11120000 ATASCADERO CREEK NEAR GOLETA, CALIF.

LOCATION.--Lat 34°25'28", long 119°48'40", in La Goleta Grant, Santa Barbara County, on downstream side of center pier of county road bridge 400 ft downstream from Maria Ygnacio Creek, 1.3 miles upstream from mouth, and 1.3 miles southeast of Goleta.

DRAINAGE AREA.--18.9 sq mi.

PERIOD OF RECORD.--October 1941 to current year. Prior to October 1947, published as Alascadero Creek near Goleta.

GAGE.--Water-stage recorder. Datum of gage is 12.59 ft above mean sea level (Santa Barbara County bench mark). Prior to Dec. 14, 1967, at site 275 ft downstream at same datum.

AVERAGE DISCHARGE.--31 years, 3.87 cfs (2,800 acre-ft per year); median of yearly mean discharges, 1.5 cfs (1,100 acre-ft per year).

EXTREMES.--Current year: Maximum discharge, 2,470 cfs Dec. 27 (gage height, 10.47 ft); no flow many days. Period of record: Maximum discharge, 5,230 cfs Jan. 25, 1969 (gage height, 13.00 ft), from rating curve extended above 2,300 cfs; no flow many days in each year.

REMARKS.--Records fair. No regulation above station. Small diversions for irrigation above station. At times low flow results from return irrigation waste water. At other times Lake Cachuma water is wasted to channel.

DISCHARGE, IN CUBIC FEET PER SECOND, WATER YEAR OCTOBER 1971 TO SEPTEMBER 1972

DAY	OCT	NOV	DEC	JAN	FEB	MAR	APR	MAY	JUN	JUL	AUG	SEP
1	0	.02	.12	.91	.30	.22	.19	.06	.05	0	0	
2	0	.03	.28	.39	.20	.02	.03	0	.07	0	0	
3	0	.03	.52	.33	.07	.11	.02	0	.01	0	0	
4	0	.03	.20	.33	.15	.27	.28	0	0	0	0	
5	0	.03	.12	.39	14	.03	.34	0	0	0	0	
6	0	.07	.09	.60	.90	.11	.03	0	.01	0	0	
7	.02	.08	.12	.60	.36	.21	0	0	0	0	0	
8	.02	.16	.12	.60	.30	.20	.04	0	0	0	0	
9	.04	.16	.12	.60	.28	.18	0	0	0	0	0	
10	.02	.16	.12	1.3	.28	.03	0	0	0	0	0	
11	.02	2.0	.12	2.2	.25	.07	2.4	0	0	.04	0	
12	.02	1.1	.20	2.4	.22	.02	.79	0	0	.09	0	
13	.04	.07	.60	2.8	.20	.13	.09	0	0	0	0	
14	.03	.03	.20	2.8	.22	.22	.01	0	0	0	0	
15	.04	.03	.12	2.8	.16	.03	0	0	0	0	0	
16	.01	.03	.12	3.0	.22	.94	0	0	0	0	0	
17	.01	.03	.20	3.1	.36	1.7	.01	0	0	0	0	
18	0	.03	.24	3.9	.22	.31	.05	0	0	0	0	
19	.03	.03	.16	3.4	.22	.21	.01	0	0	0	0	
20	.07	.03	.12	1.6	.05	.46	0	0	0	0	0	
21	.08	.03	.24	.33	.16	1.6	.01	0	0	0	.10	
22	.05	.09	64	.33	.29	.05	.02	0	0	0	.34	
23	.05	.09	3.1	.24	.22	.07	.01	0	0	0	.51	
24	.02	.12	39	.33	.31	.05	.01	0	0	0	.37	
25	.01	.12	130	.28	.34	.11	0	0	0	0	.27	
26	.03	.09	60	.15	.21	0	0	0	0	0	.15	
27	.09	.12	588	4.8	.04	0	.01	0	0	0	.05	
28	.06	.09	26	.65	.02	0	.04	0	0	0	.02	
29	.06	.12	7.4	.23	.04	0	.23	0	0	0	0	
30	.02	.12	4.1	.19	------	0	.10	0	0	0	0	
31	.02	------	2.0	.19	------	.10	------	0	------	0	0	------
TOTAL	.86	5.14	927.73	41.77	20.59	7.45	4.72	.06	.14	.13	1.81	0
MEAN	.028	.17	29.9	1.35	.71	.24	.16	.002	.005	.004	.058	0
MAX	.09	2.0	588	4.8	14	1.7	2.4	.06	.07	.09	.51	0
MIN	0	.02	.09	.15	.02	0	0	0	0	0	0	0
AC-FT	1.7	10	1,840	83	41	15	9.4	.1	.3	.3	3.6	0

CAL YR 1971 TOTAL 1,085.42 MEAN 2.97 MAX 588 MIN 0 AC-FT 2,150
WTR YR 1972 TOTAL 1,010.40 MEAN 2.76 MAX 588 MIN 0 AC-FT 2,000

PEAK DISCHARGE (BASE, 70 CFS)

DATE	TIME	G.H.	DISCHARGE	DATE	TIME	G.H.	DISCHARGE
12-22	1800	6.39	250	12-25	1500	7.46	550
12-24	0800	5.71	120	12-27	0500	10.47	2,470

11120500 SAN JOSE CREEK NEAR GOLETA, CALIF.

LOCATION.--Lat 34°27'33", long 119°48'29", in La Goleta Grant, Santa Barbara County, on right bank at Patterson Avenue bridge, 1.1 miles downstream from unnamed tributary, and 1.7 miles northeast of Goleta.

DRAINAGE AREA.--5.51 sq mi.

PERIOD OF RECORD.--January 1941 to current year.

GAGE.--Water-stage recorder. Concrete low-water control since October 1962. Datum of gage is 95.61 ft above mean sea level (Santa Barbara County Road Department bench mark). Prior to Dec. 24, 1955, at datum 5.50 ft higher. Dec. 24, 1955, to Jan. 10, 1960, at datum 1.5 ft higher.

AVERAGE DISCHARGE.--31 years, 1.79 cfs (1,300 acre-ft per year); median of yearly mean discharges, 0.8 cfs (580 acre-ft per year).

EXTREMES.--Current year: Maximum discharge, 428 cfs Dec. 27 (gage height, 5.47 ft); no flow at times.
Period of record: Maximum discharge, 2,000 cfs Jan. 25, 1969 (gage height, 10.10 ft), from rating curve extended above 400 cfs on basis of slope-area measurement at gage height 9.32 ft; maximum gage height, 12.74 ft, present datum, Jan. 21, 1943; no flow at times in each year.

REMARKS.--Records good. No regulation above station. Many small diversions for irrigation above station.

DISCHARGE, IN CUBIC FEET PER SECOND, WATER YEAR OCTOBER 1971 TO SEPTEMBER 1972

DAY	OCT	NOV	DEC	JAN	FEB	MAR	APR	MAY	JUN	JUL	AUG	SEP
1	.03	.25	.21	2.0	.32	.33	.05	.04	.10	.04	.01	.04
2	.03	.21	.33	1.9	.30	.33	.12	.04	.11	.04	.03	.04
3	.03	.21	.37	1.4	.28	.28	.20	.04	.17	.04	.04	.09
4	.03	.21	.42	1.3	.34	.29	.26	.04	.17	.04	.03	.10
5	.03	.21	.42	1.3	.90	.32	.31	.14	.14	.04	.03	.10
6	.03	.25	.42	1.1	.50	.33	.31	.24	.14	.02	.01	.07
7	.04	.25	.42	1.1	.40	.33	.23	.28	.17	.02	.03	.04
8	.04	.25	.42	.84	.41	.32	.21	.29	.20	.02	.03	.08
9	.04	.33	.42	.84	.41	.33	.21	.27	.24	.02	.03	.08
10	.04	.42	.42	.84	.38	.29	.21	.27	.21	.02	.03	.08
11	.04	.44	.42	.84	.33	.29	.32	.32	.14	.03	.03	.04
12	.04	.51	.42	.75	.40	.30	.38	.32	.12	.02	.04	.04
13	.07	.47	.42	.75	.42	.44	.24	.32	.14	.02	.03	.04
14	.10	.40	.42	.75	.42	.33	.25	.29	.16	.04	.03	.08
15	.12	.27	.42	.75	.40	.21	.28	.32	.16	.02	.03	.08
16	.15	.18	.42	.68	.37	.26	.27	.35	.15	.03	.05	.05
17	.12	.18	.42	.67	.39	.25	.24	.34	.12	.03	.05	.06
18	.12	.18	.42	.60	.42	.24	.09	.24	.12	.04	.08	0
19	.12	.21	.42	.60	.42	.31	.07	.11	.15	.04	.05	0
20	.12	.25	.42	.55	.42	.33	.08	.10	.12	.04	0	0
21	.12	.21	.42	.53	.42	.26	.07	.10	.07	.03	.01	0
22	.15	.29	4.4	.53	.42	.28	.07	.10	.06	.02	.02	0
23	.15	.15	5.6	.47	.44	.24	.10	.10	.06	.03	.01	.02
24	.15	.17	13	.37	.45	.23	.10	.10	.06	0	.04	0
25	.21	.18	32	.37	.44	.24	.09	.06	.06	.01	.04	.01
26	.29	.21	9.0	.38	.47	.23	.07	.02	.05	.01	.02	0
27	.33	.25	85	.33	.47	.24	.03	0	.04	.01	.06	0
28	.33	.33	19	.52	.42	.21	0	0	.04	.01	.05	0
29	.29	.33	6.9	.66	.37	.18	0	.03	.04	.02	.04	.01
30	.25	.21	3.2	.50	------	.12	0	.07	.04	.02	.04	.04
31	.25	------	2.1	.40	------	.04	------	.07	------	.01	.05	------
TOTAL	3.86	8.01	188.67	24.62	12.13	8.38	4.86	5.01	3.55	.78	1.04	1.19
MEAN	.12	.27	6.09	.79	.42	.27	.16	.16	.12	.025	.034	.040
MAX	.33	.51	85	2.0	.90	.44	.38	.35	.24	.04	.08	.10
MIN	.03	.15	.21	.33	.28	.04	0	0	.04	0	0	0
AC-FT	7.7	16	374	49	24	17	9.6	9.9	7.0	1.6	2.1	2.4

CAL YR 1971 TOTAL 306.36 MEAN .84 MAX 85 MIN .03 AC-FT 608
WTR YR 1972 TOTAL 262.10 MEAN .72 MAX 85 MIN 0 AC-FT 520

PEAK DISCHARGE (BASE, 100 CFS).--Dec. 25 (1345) 180 cfs (4.45 ft); Dec. 27 (0400) 428 cfs (5.47 ft).

11120510 SAN JOSE CREEK AT GOLETA, CALIF.

LOCATION.--Lat 34°25'49", long 119°49'16", in La Goleta Grant, Santa Barbara County, on right bank south of Hollister Avenue and Kellogg Road, 0.5 mile southeast of Goleta.

DRAINAGE AREA.--9.42 sq mi.

PERIOD OF RECORD.--October 1970 to current year.

GAGE.--Water-stage recorder. Altitude of gage is 10 ft (from topographic map).

EXTREMES.--Current year: Maximum discharge, 516 cfs Dec. 27 (gage height, 3.28 ft); no flow for several months. Period of record: Maximum discharge, 516 cfs Dec. 27, 1971 (gage height, 3.28 ft); no flow for long periods in each year.

REMARKS.--Records fair except those below 1.0 cfs which are poor. No regulation above station. Diversions for irrigation and domestic use above station.

COOPERATION.--Gage-height record furnished by Santa Barbara County Flood Control and Water Conservation District.

DISCHARGE, IN CUBIC FEET PER SECOND, WATER YEAR OCTOBER 1971 TO SEPTEMBER 1972

DAY	OCT	NOV	DEC	JAN	FEB	MAR	APR	MAY	JUN	JUL	AUG	SEP
1	0	.25	0	1.1	.07	0						
2	0	.18	0	.77	.07	0						
3	0	.14	0	.65	.06	0						
4	0	.10	0	.50	.07	0						
5	0	.06	0	.37	1.3	0						
6	0	.04	0	.32	.18	0						
7	0	.02	0	.29	.09	0						
8	0	0	0	.25	.07	.01						
9	0	0	0	.22	.07	0						
10	0	0	0	.18	.07	0						
11	0	1.0	0	.11	.06	0						
12	0	.50	0	.11	.04	0						
13	0	.40	0	.11	.04	0						
14	0	.30	0	.11	.04	0						
15	0	.20	0	.10	.04	0						
16	0	.18	0	.10	.02	0						
17	0	.16	0	.11	.02	0						
18	0	.14	0	.11	.02	0						
19	0	.12	0	.11	.02	0						
20	0	.10	0	.11	.02	0						
21	0	.08	.04	.11	.01	0						
22	0	.06	8.8	.10	.01	0						
23	0	.02	4.3	.10	.01	0						
24	0	.01	18	.09	0	0						
25	0	0	46	.11	0	0						
26	0	0	14	.10	0	0						
27	.60	0	120	.60	0	0						
28	.55	0	31	.24	0	0						
29	.50	0	6.2	.75	0	0						
30	.40	0	3.2	.98	------	0						
31	.30	------	1.7	.09	------	.07	------		------			------
TOTAL	2.35	4.06	253.24	9.00	2.40	.08	0	0	0	0	0	0
MEAN	.076	.14	8.17	.29	.083	.003	0	0	0	0	0	0
MAX	.60	1.0	120	1.1	1.3	.07	0	0	0	0	0	0
MIN	0	0	0	.09	0	0	0	0	0	0	0	0
AC-FT	4.7	8.1	502	18	4.8	.2	0	0	0	0	0	0

CAL YR 1971 TOTAL 415.70 MEAN 1.14 MAX 120 MIN 0 AC-FT 825
WTR YR 1972 TOTAL 271.13 MEAN .74 MAX 120 MIN 0 AC-FT 538

PEAK DISCHARGE (BASE, 150 CFS).--Dec. 25 (1415) 200 cfs (2.32 ft); Dec. 27 (0445) 516 cfs (3.28 ft).

11120520 SAN PEDRO CREEK AT GOLETA, CALIF.

LOCATION.--Lat 34°26'23", long 119°50'08", in Los Dos Pueblos Grant, Santa Barbara County, on left bank 0.1 mile north of Highway 101, and 0.6 mile northwest of Goleta.

DRAINAGE AREA.--3.21 sq mi.

PERIOD OF RECORD.--October 1970 to September 1972 (discontinued).

GAGE.--Water-stage recorder. Altitude of gage is 25 ft (from topographic map).

EXTREMES.--Current year: Maximum discharge, 440 cfs Dec. 27 (gage height, 4.28 ft); no flow Nov. 13 to Dec. 1, Jan. 7-21.
Period of record: Maximum discharge, 440 cfs Dec. 27, 1971 (gage height, 4.28 ft); no flow Nov. 13 to Dec. 1, 1971, Jan. 7-21, 1972.

REMARKS.--Records fair except those for period of no gage-height record, which are poor. No regulation or diversion.

COOPERATION.--Gage-height record furnished by Santa Barbara County Flood Control and Water Conservation District.

DISCHARGE, IN CUBIC FEET PER SECOND, WATER YEAR OCTOBER 1971 TO SEPTEMBER 1972

DAY	OCT	NOV	DEC	JAN	FEB	MAR	APR	MAY	JUN	JUL	AUG	SEP
1	.05	.08	0	.68	.10	.26	.10	.04	.06	.05	.10	.08
2	.07	.07	.02	.38	.13	.26	.10	.06	.06	.05	.10	.08
3	.08	.07	.03	.17	.13	.26	.10	.06	.06	.06	.10	.08
4	.07	.07	.07	.09	.17	.21	.03	.10	.08	.06	.10	.08
5	.06	.09	.14	.04	1.7	.17	.03	.13	.08	.06	.10	.08
6	.05	.10	.21	.02	.46	.13	.03	.06	.07	.06	.10	.08
7	.07	.12	.03	.01	.39	.10	.04	.06	.06	.06	.10	.08
8	.08	.21	.05	0	.39	.10	.06	.06	.06	.07	.10	.08
9	.10	.21	1.0	0	.39	.10	.08	.06	.06	.07	.10	.08
10	.23	.46	.32	0	.32	.08	.08	.06	.06	.07	.09	.08
11	.08	.91	.32	0	.26	.08	.32	.17	.06	.07	.09	.08
12	.08	.01	.54	0	.13	.08	.03	.10	.06	.07	.09	.08
13	.10	0	.09	0	.17	.08	.03	.10	.06	.07	.09	.08
14	.16	0	.03	0	.17	.08	.03	.10	.05	.08	.09	.08
15	.07	0	.03	0	.13	.13	.03	.06	.05	.08	.09	.08
16	.08	0	.03	0	.13	.13	.03	.08	.05	.08	.09	.08
17	.09	0	.03	0	.17	.13	.04	.13	.05	.08	.09	.08
18	.11	0	.02	0	.21	.10	.03	.10	.05	.08	.09	.08
19	.08	0	.03	0	.21	.10	.04	.08	.05	.08	.09	.08
20	.06	0	.03	0	.26	.10	.04	.08	.05	.09	.09	.08
21	.06	0	.11	0	.26	.10	.04	.06	.04	.09	.09	.08
22	.06	0	5.3	.01	.21	.10	.06	.06	.04	.09	.09	.08
23	.04	0	.14	.02	.10	.10	.06	.06	.04	.09	.08	.08
24	.03	0	5.3	.02	.13	.08	.04	.06	.04	.09	.08	.08
25	.04	0	15	.03	.13	.08	.04	.06	.04	.09	.08	.08
26	.21	0	6.0	.04	.17	.08	.04	.08	.04	.10	.08	.08
27	.39	0	67	.27	.21	.08	.04	.10	.04	.10	.08	.08
28	.15	0	26	.06	.32	.08	.06	.08	.05	.10	.08	.08
29	.06	0	16	.07	.32	.08	.06	.06	.05	.10	.08	.08
30	.32	0	8.0	.08	------	.08	.06	.06	.05	.10	.08	.08
31	.39	------	3.0	.08	------	.08	------	.06	------	.10	.08	------
TOTAL	3.52	2.40	154.87	2.07	7.87	3.62	1.77	2.43	1.61	2.44	2.79	2.40
MEAN	.11	.080	5.00	.067	.27	.12	.059	.078	.054	.079	.090	.080
MAX	.39	.91	67	.68	1.7	.26	.32	.17	.08	.10	.10	.08
MIN	.03	0	0	0	.10	.08	.03	.04	.04	.05	.08	.08
AC-FT	7.0	4.8	307	4.1	16	7.2	3.5	4.8	3.2	4.8	5.5	4.8

CAL YR 1971 TOTAL 298.75 MEAN .82 MAX 67 MIN 0 AC-FT 593
WTR YR 1972 TOTAL 187.79 MEAN .51 MAX 67 MIN 0 AC-FT 372

PEAK DISCHARGE (BASE, 75 CFS).--Dec. 27 (0415) 440 cfs (4.28 ft).

NOTE.--No gage-height record June 7 to Sept. 30.

11120530 TECOLOTITO CREEK NEAR GOLETA, CALIF.

LOCATION.--Lat 34°26'05", long 119°52'04", in Los Dos Pueblos Grant, Santa Barbara County, on right bank 0.2 mile east of Glen Annie Road, and 2.1 miles west of Goleta.

DRAINAGE AREA.--4.42 sq mi.

PERIOD OF RECORD.--October 1970 to September 1972 (discontinued).

GAGE.--Water-stage recorder. Altitude of gage is 40 ft (from topographic map).

EXTREMES.--Current year: Maximum discharge, 397 cfs Dec. 27 (gage height, 3.14 ft); no flow for several days.
Period of record: Maximum discharge, 397 cfs Dec. 27, 1971 (gage height, 3.14 ft); no flow for several days in each year.

REMARKS.--Records poor. No regulation. Some pumping for irrigation.

COOPERATION.--Gage-height record furnished by Santa Barbara County Flood Control and Water Conservation District.

DISCHARGE, IN CUBIC FEET PER SECOND, WATER YEAR OCTOBER 1971 TO SEPTEMBER 1972

DAY	OCT	NOV	DEC	JAN	FEB	MAR	APR	MAY	JUN	JUL	AUG	SEP
1	.20	.02	0	1.3	.60	.18	.40	.11	.10	.14	.15	.24
2	.25	.20	.14	1.3	.40	.18	.40	.18	.10	.14	.15	.24
3	.25	.06	0	1.2	.40	.24	.40	.28	.10	.14	.15	.24
4	.18	.05	0	1.1	.40	.24	.28	.18	.10	.14	.16	.23
5	.09	.05	0	1.0	1.4	.22	.28	.28	.11	.14	.16	.23
6	.13	0	0	1.0	.80	.28	.28	.28	.11	.14	.16	.23
7	.11	0	.01	1.0	.40	.44	.40	.28	.11	.14	.17	.23
8	.15	0	0	1.0	.40	.40	1.2	.28	.11	.14	.17	.22
9	.67	0	0	1.0	.40	.36	1.4	.28	.11	.14	.18	.22
10	.34	0	0	.96	.40	.39	3.8	.28	.12	.14	.18	.22
11	.26	.28	0	.92	.28	.25	4.3	.28	.12	.14	.19	.21
12	.08	.06	.02	1.0	.28	.28	7.4	.28	.12	.14	.19	.21
13	.09	0	0	.83	.28	.28	6.6	.28	.12	.14	.19	.21
14	.09	0	0	.80	.18	.27	.28	.28	.12	.14	.20	.20
15	.03	0	0	.80	.18	.28	.18	.28	.13	.14	.20	.20
16	.04	0	0	1.0	.18	.28	.11	.28	.13	.15	.20	.20
17	.02	0	0	.80	.18	.28	.11	.28	.13	.15	.21	.20
18	.04	0	0	.60	.18	.40	.11	.18	.13	.15	.21	.19
19	.15	0	0	.60	.18	.40	.11	.18	.13	.15	.21	.19
20	.07	0	0	.80	.18	.40	.11	.18	.14	.15	.21	.19
21	.10	0	.18	.80	.18	.40	.11	.11	.14	.15	.22	.19
22	.09	0	9.5	.80	.18	.40	.11	.11	.14	.15	.22	.18
23	.18	0	.93	.80	.18	.40	.11	.11	.14	.15	.23	.18
24	0	.01	6.0	.80	.18	.40	.11	.10	.14	.15	.23	.18
25	0	.01	13	.80	.18	.40	.11	.10	.14	.15	.23	.17
26	0	0	8.3	.80	.18	.40	.11	.10	.14	.15	.24	.17
27	.04	.02	67	.60	.18	.40	.11	.10	.14	.15	.24	.17
28	.12	.01	15	.60	.18	.40	.11	.10	.14	.15	.24	.16
29	.08	0	2.3	.60	.18	.40	.11	.10	.14	.15	.24	.16
30	.11	0	1.2	.60	------	.40	.11	.10	.14	.15	.24	.16
31	.02	------	1.2	.60	------	.40	------	.10	------	.15	.24	------
TOTAL	3.98	.77	124.78	26.81	9.32	10.45	29.25	6.06	3.74	4.50	6.21	6.02
MEAN	.13	.026	4.03	.86	.32	.34	.98	.20	.12	.15	.20	.20
MAX	.67	.28	67	1.3	1.4	.44	7.4	.28	.14	.15	.24	.24
MIN	0	0	0	.60	.18	.18	.11	.10	.10	.14	.15	.16
AC-FT	7.9	1.5	248	53	18	21	58	12	7.4	8.9	12	12

CAL YR 1971 TOTAL 251.85 MEAN .69 MAX 67 MIN 0 AC-FT 500
WTR YR 1972 TOTAL 231.89 MEAN .63 MAX 67 MIN 0 AC-FT 460

NOTE.--No gage-height record May 25 to July 17, Sept. 1-30.

11120550 GAVIOTA CREEK NEAR GAVIOTA, CALIF.

LOCATION.--Lat 34°29'16", long 120°13'34", in Nuestra Senora Del Refugio Grant, Santa Barbara County, on left bank 1.3 miles northwest of Gaviota, and 1.6 miles upstream from mouth.

DRAINAGE AREA.--18.8 sq mi.

PERIOD OF RECORD.--October 1966 to current year.

GAGE.--Water-stage recorder. Altitude of gage is 100 ft (from topographic map).

AVERAGE DISCHARGE.--6 years, 4.04 cfs (2,930 acre-ft per year).

EXTREMES.--Current year: Maximum discharge, 458 cfs Dec. 27 (gage height, 5.05 ft); no flow at times.
Period of record: Maximum discharge, 4,000 cfs Jan. 24, 1967 (gage height, 8.40 ft), from rating curve extended above 1,300 cfs on basis of slope-area measurement of maximum flow; no flow at times in some years.

REMARKS.--Records good. No regulation. Small pumping for domestic and resort use.

DISCHARGE, IN CUBIC FEET PER SECOND, WATER YEAR OCTOBER 1971 TO SEPTEMBER 1972

DAY	OCT	NOV	DEC	JAN	FEB	MAR	APR	MAY	JUN	JUL	AUG	SEP
1	0	0	.04	.75	.37	.37	.23	.18	.02	.02		
2	0	0	.57	.57	.35	.34	.29	.27	.03	.03		
3	0	0	.13	.42	.30	.32	.32	.34	.03	.03		
4	0	0	.05	.30	.35	.31	.33	.38	.03	0		
5	0	0	.05	.30	.65	.31	.35	.40	.02	0		
6	0	0	.06	.30	.40	.35	.36	.35	.03	0		
7	0	.02	.05	.25	.35	.43	.28	.34	.07	0		
8	0	.02	.06	.25	.35	.45	.23	.35	.10	0		
9	0	.02	.05	.25	.39	.43	.22	.43	.07	0		
10	0	.02	.07	.20	.36	.40	.24	.37	.04	0		
11	0	.06	.07	.20	.34	.34	.69	.37	.02	0		
12	0	.12	.10	.20	.37	.33	.49	.27	0	0		
13	0	.03	.16	.25	.35	.33	.43	.16	0	0		
14	0	.02	.07	.20	.35	.34	.28	.07	.03	0		
15	0	.01	.07	.20	.35	.35	.24	.15	.03	0		
16	.04	0	.07	.20	.35	.37	.25	.25	0	0		
17	.03	.02	.07	.25	.42	.39	.30	.21	0	0		
18	0	.03	.10	.30	.42	.34	.30	.19	.03	0		
19	0	.03	.10	.25	.42	.28	.29	.19	.05	0		
20	0	.03	.10	.25	.42	.30	.27	.15	.03	0		
21	0	.03	.16	.25	.42	.31	.27	.15	.02	0		
22	0	.04	18	.30	.35	.29	.31	.11	0	0		
23	0	.04	4.5	.30	.35	.30	.37	.07	.03	0		
24	0	.04	3.9	.30	.35	.26	.41	.11	.02	0		
25	0	.04	24	.30	.35	.25	.30	.09	0	0		
26	0	.04	8.2	.35	.35	.26	.21	.13	0	0		
27	0	.03	93	.57	.35	.21	.17	.10	0	0		
28	0	.04	14	.45	.38	.22	.19	.05	0	0		
29	0	.05	5.1	.36	.42	.23	.26	.02	0	0		
30	0	.04	2.6	.35	------	.23	.21	.02	0	0		
31	0	------	1.4	.36	------	.20	------	.02	------	0		------
TOTAL	.07	.82	176.90	9.78	10.98	9.84	9.09	6.29	.70	.08	0	0
MEAN	.002	.027	5.71	.32	.38	.32	.30	.20	.023	.003	0	0
MAX	.04	.12	93	.75	.65	.45	.69	.43	.10	.03	0	0
MIN	0	0	.04	.20	.30	.20	.17	.02	0	0	0	0
AC-FT	.1	1.6	351	19	22	20	18	12	1.4	.2	0	0

CAL YR 1971 TOTAL 341.21 MEAN .93 MAX 93 MIN 0 AC-FT 677
WTR YR 1972 TOTAL 224.55 MEAN .61 MAX 93 MIN 0 AC-FT 445

PEAK DISCHARGE (BASE, 100 CFS).--Dec. 25 (1200) 110 cfs (3.93 ft); Dec. 27 (0230) 458 cfs (5.05 ft).

11120600 JALAMA CREEK NEAR LOMPOC, CALIF.

LOCATION.--Lat 34°30'50", long 120°29'02", in San Julian Grant, Santa Barbara County, on downstream side of right bridge pier on Jalama Road, 0.6 mile downstream from Gasper Creek, 1.4 miles upstream from mouth, and 8.9 miles southwest of Lompoc.

DRAINAGE AREA.--20.5 sq mi.

PERIOD OF RECORD.--September 1965 to current year.

GAGE.--Water-stage recorder and concrete control. Altitude of gage is 80 ft (from topographic map).

AVERAGE DISCHARGE.--7 years, 2.55 cfs (1,850 acre-ft per year).

EXTREMES.--Current year: Maximum discharge, 91 cfs Dec. 27 (gage height, 3.96 ft); no flow much of year.
Period of record: Maximum discharge, 1,710 cfs Jan. 24, 1967 (gage height, 8.05 ft); no flow many days in most years.

REMARKS.--Records good. No regulation or diversion above station. Pumping from wells for irrigation of about 400 acres.

DISCHARGE, IN CUBIC FEET PER SECOND, WATER YEAR OCTOBER 1971 TO SEPTEMBER 1972

DAY	OCT	NOV	DEC	JAN	FEB	MAR	APR	MAY	JUN	JUL	AUG	SEP
1			0	.24	.10	.07	.03					
2			0	.21	.10	.05	.04					
3			0	.21	.10	.05	.03					
4			0	.17	.13	.05	.05					
5			0	.17	.21	.05	.03					
6			0	.18	.17	.05	.02					
7			0	.21	.17	.07	.01					
8			0	.17	.13	.05	0					
9			0	.20	.13	.05	.01					
10			0	.38	.13	.05	.01					
11			0	.26	.13	.04	.04					
12			0	.17	.13	.04	.05					
13			0	.17	.13	.04	.06					
14			0	.26	.10	.03	0					
15			0	.31	.09	.03	0					
16			0	.37	.08	.02	0					
17			0	.37	.08	.03	0					
18			0	.21	.10	.04	0					
19			0	.10	.10	.03	0					
20			0	.13	.10	.04	0					
21			0	.10	.10	.06	0					
22			3.0	.07	.10	.05	0					
23			1.2	.07	.10	.06	0					
24			.60	.10	.10	.03	0					
25			2.6	.10	.10	.02	0					
26			1.8	.10	.11	.02	0					
27			28	.13	.10	.01	0					
28			1.6	.10	.10	0	0					
29			.52	.10	.07	.02	0					
30			.37	.10	------	.04	0					
31		------	.31	.13	------	.03	------		------			------
TOTAL	0	0	40.00	5.59	3.29	1.22	.38	0	0	0	0	0
MEAN	0	0	1.29	.18	.11	.039	.013	0	0	0	0	0
MAX	0	0	28	.38	.21	.07	.06	0	0	0	0	0
MIN	0	0	0	.07	.07	0	0	0	0	0	0	0
AC-FT	0	0	79	11	6.5	2.4	.8	0	0	0	0	0

CAL YR 1971 TOTAL 119.92 MEAN .33 MAX 28 MIN 0 AC-FT 238
WTR YR 1972 TOTAL 50.48 MEAN .14 MAX 28 MIN 0 AC-FT 100

PEAK DISCHARGE (BASE, 150 CFS).--No peak above base.

11121000 SANTA YNEZ RIVER AT JAMESON LAKE, NEAR MONTECITO, CALIF.

LOCATION.--Lat 34°29'32", long 119°30'25", in SW¼NE¼NW¼ sec.28, T.5 N., R.25 W., Santa Barbara County, on upstream face of Juncal Dam, 6.5 miles north of Carpinteria, and 8 miles northeast of Montecito.
DRAINAGE AREA.--13.9 sq mi (excludes Alder Creek).
PERIOD OF RECORD.--December 1930 to current year. Prior to October 1938, published as "at Juncal Reservoir, near Montecito."
GAGE.--Water-stage recorder on lake; water-stage recorder and sharp-crested weir on outlet conduit. Datum of gage is 2,021.6 ft above mean sea level (Bureau of Reclamation bench mark), or 2,000 ft above arbitrary datum (called sea level) generally used for works in this vicinity.
AVERAGE DISCHARGE.--41 years (1931-72), 6.24 cfs (4,520 acre-ft per year); median of yearly mean discharges, 2.1 cfs (1,500 acre-ft per year).
REMARKS.--Records of total inflow represent all water reaching Jameson Lake including precipitation on the lake. Total inflow computed on basis of records of storage, diversion (draft) to the city of Montecito, spill and release to river, and evaporation. Records of net inflow exclude precipitation on lake surface. Monthly evaporation from lake surface computed on basis of evaporation from Colorado land pan using coefficient of 0.80. Area table is based on survey made in 1961. Capacity table is based on survey made in 1969. Lake capacity at spillway level (gage height, 223.82 ft), 6,119 acre-ft. Dead storage, 18 acre-ft, below lowest outlet at gage height 139.0 ft included in these records. There is no regulation or diversion above station. At times flow of Alder Creek, which enters Santa Ynez River 2 miles downstream from Juncal Dam, is diverted at elevation 2,250 ft through a tunnel to Jameson Lake and is included in these records.
COOPERATION.--Reservoir-operation records and related data furnished by Montecito County Water District.
REVISIONS.--Revised monthly tables for water years 1969, 1970, and 1971, superseding those published in WRD Calif. 1969, 1970, and 1971, are given herewith:

MONTHLY NET DISCHARGE, WATER YEAR OCTOBER 1968 TO SEPTEMBER 1969

Date	Gage height (feet)a	Contents (acre-feet)	Change in Contents (acre-feet)	Draft (acre-feet)	Spill and Release (acre-feet)	Evapo-ration (acre-feet)	Total inflow (acre-feet)	Rain on reser-voir (acre-feet)	Net inflow (acre-feet)
	Jameson Lake								
Sept. 30.....	208.86	4,658	-	-	-	-	-	-	-
Oct. 31.....	206.77	4,417	-241	277	0	16	52	12	40
Nov. 30.....	205.17	4,236	-181	205	0	10	34	9	25
Dec. 31.....	204.00	4,107	-129	164	0	7	42	21	21
CAL YR 1968.....	-	-	-1,734	2,466	0	351	1,083	138	945
Jan. 31.....	224.12	6,639	+2,532	101	10,740	5	13,378	528	12,850
Feb. 28.....	224.31	6,186	-453	0	12,960	6	12,513	315	12,198
Mar. 31.....	224.05	6,150	-36	24	4,650	b 20	4,658	24	4,634
Apr. 30.....	223.97	6,138	-12	183	1,480	b 34	1,685	37	1,648
May 31.....	223.93	6,133	-5	250	583	45	873	0	873
June 30.....	223.54	6,080	-53	315	11	43	316	0	316
July 31.....	222.12	5,888	-192	338	0	62	208	0	208
Aug. 31.....	220.10	5,620	-268	356	0	68	156	0	156
Sept. 30.....	218.10	5,364	-256	359	0	40	143	0	143
WTR YR 1969.....	-	-	+706	2,572	30,424	356	34,058	946	33,112

MONTHLY NET DISCHARGE, WATER YEAR OCTOBER 1969 TO SEPTEMBER 1970

Date	Gage height (feet)a	Contents (acre-feet)	Change in Contents (acre-feet)	Draft (acre-feet)	Spill and Release (acre-feet)	Evapo-ration (acre-feet)	Total inflow (acre-feet)	Rain on reser-voir (acre-feet)	Net inflow (acre-feet)
	Jameson Lake								
Oct. 31.....	216.21	5,124	-240	245	0	25	30	0	30
Nov. 30.....	215.59	5,047	-77	152	0	10	85	31	54
Dec. 31.....	214.60	4,922	-125	177	0	6	58	2	56
CAL YR 1969.....	-	-	+815	2,500	30,424	364	34,103	937	33,166
Jan. 31.....	214.87	4,956	+34	108	0	6	148	42	106
Feb. 28.....	216.40	5,148	+192	136	0	12	340	39	301
Mar. 31.....	223.93	6,133	+985	100	46	27	1,158	79	1,079
Apr. 30.....	222.82	5,982	-151	230	73	42	194	0	194
May 31.....	220.65	5,692	-290	317	0	52	79	0	79
June 30.....	218.45	5,408	-284	264	0	56	36	0	36
July 31.....	215.62	5,050	-358	289	0	67	-2	0	-2
Aug. 31.....	212.65	4,680	-370	281	0	66	-23	0	-23
Sept. 30.....	209.83	4,343	-337	284	0	46	-7	0	-7
WTR YR 1970.....	-	-	-1,021	2,583	119	415	2,096	193	1,903

See footnotes following 1971-72 table.

11121000 SANTA YNEZ RIVER AT JAMESON LAKE, NEAR MONTECITO, CALIF.--Continued

REVISIONS.--Continued

MONTHLY NET DISCHARGE, WATER YEAR OCTOBER 1970 TO SEPTEMBER 1971

Date	Gage height (feet)a	Contents (acre-feet)	Change in Contents (acre-feet)	Draft (acre-feet)	Spill and Release (acre-feet)	Evapo-ration (acre-feet)	Total inflow (acre-feet)	Rain on reser-voir (acre-feet)	Net inflow (acre-feet)
	Jameson Lake								
Oct. 31.....	207.26	4,054	-289	254	0	24	-11	0	-11
Nov. 30.....	211.13	4,497	+443	181	0	10	634	100	534
Dec. 31.....	216.98	5,221	+724	97	0	4	825	84	741
CAL YR 1970.....	-	-	+299	2,541	119	412	3,371	344	3,027
Jan. 31.....	219.41	5,531	+310	86	0	6	402	9	393
Feb. 28.....	220.59	5,685	+154	127	0	17	298	34	264
Mar. 31.....	220.58	5,683	-2	164	0	30	192	9	183
Apr. 30.....	220.05	5,614	-69	150	0	32	113	9	104
May 31.....	219.13	5,496	-118	157	0	36	75	8	67
June 30.....	217.63	5,304	-192	205	0	50	63	0	63
July 31.....	215.06	4,980	-324	268	0	64	8	0	8
Aug. 31.....	212.36	4,645	-335	258	0	58	-19	0	-19
Sept. 30.....	209.77	4,336	-309	245	0	39	-25	0	-25
WTR YR 1971.....	-	-	-7	2,192	0	370	2,555	253	2,302

MONTHLY NET DISCHARGE, WATER YEAR OCTOBER 1971 TO SEPTEMBER 1972

Date	Gage height (feet)a	Contents (acre-feet)	Change in Contents (acre-feet)	Draft (acre-feet)	Spill and Release (acre-feet)	Evapo-ration (acre-feet)	Total inflow (acre-feet)	Rain on reser-voir (acre-feet)	Net inflow (acre-feet)
	Jameson Lake								
Oct. 31.....	206.96	4,021	-315	267	0	19	-29	8	-37
Nov. 30.....	204.99	3,814	-207	204	0	9	6	11	-5
Dec. 31.....	210.71	4,447	+633	122	0	5	760	128	632
CAL YR 1971.....	-	-	-774	2,253	0	365	1,844	216	1,628
Jan. 31.....	211.49	4,540	+93	75	0	7	175	3	172
Feb. 29.....	211.75	4,571	+31	55	0	14	100	3	97
Mar. 31.....	211.01	4,482	-89	118	0	31	60	0	60
Apr. 30.....	210.04	4,368	-114	114	0	32	32	2	30
May 31.....	209.19	4,269	-99	80	0	37	18	1	17
June 30.....	207.77	4,109	-160	109	0	42	-9	0	-9
July 31.....	205.87	3,905	-204	142	0	55	-7	0	-7
Aug. 31.....	203.45	3,661	-244	164	0	45	-35	0	-35
Sept. 30.....	201.91	3,509	-152	127	0	25	0	0	0
WTR YR 1972.....	-	-	-827	1,577	0	321	1,071	156	915

a Gage height at 1800.
b Estimated.
NOTE.--For months when inflow to the lake was small and other quantities were large, discordant figures of net inflow may appear. This arises primarily from the difficulty of computing net inflow as the residual of several larger quantities, which are not susceptible to measurement with a precision necessary to produce a final answer within desirable limits of accuracy.

11122000 SANTA YNEZ RIVER ABOVE GIBRALTAR DAM, NEAR SANTA BARBARA, CALIF.

LOCATION.--Lat 34°31'34", long 119°41'08", in SW¼NW¼SW¼ sec.11, T.5 N., R.27 W., Santa Barbara County, on upstream face of Gibraltar Dam, 7 miles north of Santa Barbara.

DRAINAGE AREA.--216 sq mi.

PERIOD OF RECORD.--April 1920 to current year. November 1903 to November 1918 (fragmentary) at river station at damsite; records not equivalent because records since April 1920 are based on operation of Gibraltar Reservoir, and since December 1930, Jameson Lake. Prior to October 1945, published as "near Santa Barbara."

GAGE.--Water-stage recorder on reservoir; water-stage recorder and sharp-crested weir on diversion. Spill and release measured at river gaging station below dam (see sta 11123000). Datum of gage is at mean sea level. See WSP 1735 for history of changes prior to Oct. 1, 1955.

REMARKS.--Records of total inflow represent all water reaching Gibraltar Reservoir, including precipitation on reservoir. Total inflow computed on basis of records of storage, diversion (draft) to city of Santa Barbara, spill and release to river, and evaporation. Records of net inflow exclude precipitation on reservoir surface. Monthly evaporation from reservoir surface computed on basis of evaporation from Colorado land pan using coefficient of 0.80. Area and capacity tables are based on surveys made in August 1969. Reservoir capacity at spillway level (elevation, 1,399.82 ft), 9,654 acre-ft. Flashboards were not used in 1972. Silt level of reservoir at elevation 1,344.4 ft. Lowest outlet at elevation 1,333.86 ft. Flow regulated by Jameson Lake since December 1930 (see sta 11121000).

COOPERATION.--Reservoir-operation records and related data furnished by city of Santa Barbara.

MONTHLY NET INFLOW, WATER YEAR OCTOBER 1971 TO SEPTEMBER 1972

Date	Elevation (feet)a	Contents (acre-feet)	Change in contents (acre-feet)	Draft (acre-feet)	Spill and release (acre-feet)	Evaporation (acre-feet)	Total inflow (acre-feet)	Rain on reservoir (acre-feet)	Net inflow (acre-feet)
	Gibraltar Reservoir								
Sept. 30.....	1,367.65	2,712	-	-	-	-	-	-	-
Oct. 31.....	1,366.28	2,499	-213	167	0	39	-7	6	-13
Nov. 30.....	1,366.23	2,491	-8	11	0	17	20	14	6
Dec. 31.....	1,395.61	8,419	+5,928	0	b 26	3	5,957	217	5,740
CAL YR 1971.....	-	-	-1,130	4,868	15,630	671	20,039	365	19,674
Jan. 31.....	1,398.64	9,301	+882	506	b 169	14	1,571	0	1,571
Feb. 29.....	1,399.55	9,573	+272	446	0	32	750	8	742
Mar. 31.....	1,398.50	9,259	-314	707	0	91	484	0	484
Apr. 30.....	1,396.07	8,547	-712	944	0	84	316	6	310
May 31.....	1,392.85	7,691	-856	942	0	98	184	2	182
June 30.....	1,389.22	6,829	-862	833	42	93	106	4	102
July 31.....	1,384.51	5,802	-1,027	863	152	96	84	0	84
Aug. 31.....	1,379.54	4,801	-1,001	825	152	99	75	0	75
Sept. 30.....	1,374.37	3,843	-958	799	146	81	68	0	68
WTR YR 1972.....	-	-	+1,131	7,043	687	747	9,608	257	9,351

a Elevation at 1800.
b Estimated.

NOTE.--For months when inflow to the reservoir was small and other quantities were large, discordant figures of net inflow may appear. This arises primarily from the difficulty of computing net inflow as the residual of several larger quantities, which are not susceptible to measurement with a precision necessary to produce a final answer within desirable limits of accuracy.

11123000 SANTA YNEZ RIVER BELOW GIBRALTAR DAM, NEAR SANTA BARBARA, CALIF.

LOCATION.--Lat 34°31'28", long 119°41'11", in NW¼SW¼SW¼ sec.11, T.5 N., R.27 W., Santa Barbara County, on left bank 700 ft downstream from Gibraltar Dam, and 7 miles north of Santa Barbara.

DRAINAGE AREA.--216 sq mi.

PERIOD OF RECORD.--April 1920 to current year (monthly discharge only prior to October 1941).

GAGE.--Water-stage recorder; water-stage recorder and combination sharp-crested weir on "release to river" gage. Datum of gage is 1,227 ft above mean sea level. See WSP 1735 for history of changes prior to May 20, 1958.

EXTREMES.--Current year: Maximum discharge, 60 cfs Jan. 18 (gage height, 8.52 ft); no flow many days. Period of record: Maximum discharge, 54,200 cfs Jan. 25, 1969 (gage height, 25.8 ft), from rating curve extended above 2,100 cfs on basis of computations of flow from gate openings and flow over dam at gage heights 17.5 and 25.8 ft; no flow at times in most years.

REMARKS.--Records fair. Flow regulated by Jameson Lake (see sta 11121000) and Gibraltar Reservoir (see sta 11122000). City of Santa Barbara diverted 3,550 acre-ft during current year from Gibraltar Reservoir; Montecito County Water District diverted 1,580 acre-ft during current year from Jameson Lake.

DISCHARGE, IN CUBIC FEET PER SECOND, WATER YEAR OCTOBER 1971 TO SEPTEMBER 1972

DAY	OCT	NOV	DEC	JAN	FEB	MAR	APR	MAY	JUN	JUL	AUG	SEP
1			0	3.0					0	3.4	2.5	3.2
2			0	4.7					0	3.4	2.4	3.2
3			0	7.0					0	3.4	2.2	3.2
4			0	11					0	3.4	2.2	3.2
5			0	5.5					0	3.0	2.2	3.2
6			0	5.7					0	2.5	2.2	3.2
7			0	4.4					0	2.5	2.2	3.2
8			0	2.9					0	2.5	2.2	3.2
9			0	2.5					0	2.5	2.4	3.2
10			0	2.2					0	2.5	2.8	3.2
11			0	1.7					0	2.5	2.8	3.2
12			0	1.0					0	2.1	2.8	3.2
13			0	.60					0	1.9	2.8	2.7
14			0	1.2					0	1.9	2.8	2.1
15			0	1.7					0	1.9	2.8	2.3
16			0	2.5					0	1.9	2.9	2.3
17			0	2.9					0	1.9	2.4	2.3
18			0	9.1					0	1.9	2.4	2.3
19			0	6.6					0	2.1	2.4	2.3
20			0	5.2					0	2.4	2.4	2.3
21			0	3.4					.09	2.4	2.4	2.3
22			0	.30					1.8	2.4	2.4	2.3
23			0	0					1.8	2.4	2.3	2.3
24			0	0					1.8	2.4	2.3	2.3
25			0	0					1.8	2.3	2.3	2.3
26			0	0					1.8	2.4	2.3	2.3
27			2.4	0					2.1	2.5	2.3	2.0
28			2.5	0					3.4	2.5	2.3	.60
29			2.6	0					3.4	2.9	2.2	0
30			2.7	0	------				3.4	2.5	2.9	0
31		------	2.8	0	------		------		------	2.5	3.2	------
TOTAL	0	0	13.0	85.10	0	0	0	0	21.39	76.8	76.7	73.40
MEAN	0	0	.42	2.75	0	0	0	0	.71	2.48	2.47	2.45
MAX	0	0	2.8	11	0	0	0	0	3.4	3.4	3.2	3.2
MIN	0	0	0	0	0	0	0	0	0	1.9	2.2	0
AC-FT	0	0	26	169	0	0	0	0	42	152	152	146

CAL YR 1971 TOTAL 7,883.78 MEAN 21.6 MAX 660 MIN 0 AC-FT 15,640
WTR YR 1972 TOTAL 346.39 MEAN .95 MAX 11 MIN 0 AC-FT 687

11123500 SANTA YNEZ RIVER BELOW LOS LAURELES CANYON, NEAR SANTA YNEZ, CALIF.

LOCATION.--Lat 34°32'37", long 119°51'50", in San Marcos Grant, Santa Barbara County, on left bank 0.3 mile downstream from Los Laureles Canyon Creek, and 13.3 miles east of Santa Ynez.

DRAINAGE AREA.--277 sq mi.

PERIOD OF RECORD.--April 1947 to current year. Monthly discharge only for some periods, published in WSP 1315-B.

GAGE.--Water-stage recorder. Datum of gage is 787.8 ft above mean sea level.

EXTREMES.--Current year: Maximum discharge, 3,690 cfs Dec. 27 (gage height, 8.27 ft); no flow for several months.

Period of record: Maximum discharge, 67,500 cfs Jan. 25, 1969 (gage height, 18.88 ft), from rating curve extended above 11,600 cfs on basis of maximum flow for station below Gibraltar Dam plus tributary inflow; no flow for several months in each year.

REMARKS.--Records good. Flow regulated by Jameson Lake and Gibraltar Reservoir (see sta 11121000, 11122000). Water diverted out of basin from these reservoirs to cities of Montecito and Santa Barbara for municipal supply. Low flow affected by intermittent pumping for irrigation from infiltration gallery in riverbed at station.

DISCHARGE, IN CUBIC FEET PER SECOND, WATER YEAR OCTOBER 1971 TO SEPTEMBER 1972

DAY	OCT	NOV	DEC	JAN	FEB	MAR	APR	MAY	JUN	JUL	AUG	SEP
1			0	39	6.3	2.8	0					
2			0	34	5.8	2.8	0					
3			0	28	5.8	2.8	0					
4			0	26	5.8	2.8	0					
5			0	25	5.8	2.8	0					
6			0	20	6.3	2.8	0					
7			0	18	6.3	3.1	0					
8			0	18	5.8	3.1	0					
9			0	17	5.8	2.8	.09					
10			0	15	4.9	2.8	.40					
11			0	13	4.9	2.8	0					
12			0	13	4.5	2.8	0					
13			0	12	4.5	2.8	0					
14			0	11	4.5	1.9	0					
15			0	11	4.5	0	0					
16			0	10	4.1	0	0					
17			0	11	4.1	0	0					
18			0	11	4.1	0	0					
19			0	11	4.1	0	0					
20			0	11	4.1	.95	0					
21			0	11	3.7	1.6	0					
22			1.7	11	3.7	1.3	0					
23			.90	10	3.4	0	0					
24			12	9.0	3.4	0	0					
25			119	8.5	3.4	0	0					
26			107	7.3	3.1	0	0					
27			1,060	7.3	3.1	0	0					
28			220	7.3	2.8	0	0					
29			112	6.8	2.8	0	0					
30			75	6.8	------	0	0					
31		------	51	6.3	------	0	------		------			------
TOTAL	0	0	1,758.60	445.3	131.4	42.75	.49	0	0	0	0	0
MEAN	0	0	56.7	14.4	4.53	1.38	.016	0	0	0	0	0
MAX	0	0	1,060	39	6.3	3.1	.40	0	0	0	0	0
MIN	0	0	0	6.3	2.8	0	0	0	0	0	0	0
AC-FT	0	0	3,490	883	261	85	1.0	0	0	0	0	0

CAL YR 1971 TOTAL 9,978.48 MEAN 27.3 MAX 1,060 MIN 0 AC-FT 19,790
WTR YR 1972 TOTAL 2,378.54 MEAN 6.50 MAX 1,060 MIN 0 AC-FT 4,720

11124500 SANTA CRUZ CREEK NEAR SANTA YNEZ, CALIF.

LOCATION.--Lat 34°35'48", long 119°54'28", in San Marcos Grant, Santa Barbara County, on right bank 0.6 mile downstream from Pine Canyon, and 9.9 miles east of Santa Ynez.

DRAINAGE AREA.--74.0 sq mi.

PERIOD OF RECORD.--October 1941 to current year. Monthly discharge only for some periods, published in WSP 1315-B.

GAGE.--Water-stage recorder. Datum of gage is 783.38 ft above mean sea level. See WSP 1735 for history of changes prior to Sept. 27, 1952. Sept. 27, 1952, to June 24, 1969, at datum 3.25 ft higher.

AVERAGE DISCHARGE.--31 years, 16.8 cfs (12,170 acre-ft per year); median of yearly mean discharges, 7.0 cfs (5,100 acre-ft per year).

EXTREMES.--Current year: Maximum discharge, 436 cfs Dec. 25 (gage height, 9.90 ft); no flow many days.
Period of record: Maximum discharge, 7,050 cfs Feb. 24, 1969 (gage height, 14.45 ft, from floodmark, present datum), from rating curve extended above 2,500 cfs on basis of slope-area measurement at gage height 14.16 ft; no flow at times since 1953.

REMARKS.--Records good. No regulation or diversion above station.

DISCHARGE, IN CUBIC FEET PER SECOND, WATER YEAR OCTOBER 1971 TO SEPTEMBER 1972

DAY	OCT	NOV	DEC	JAN	FEB	MAR	APR	MAY	JUN	JUL	AUG	SEP
1			0	12	6.0	4.8	2.7	.72	.19			
2			0	14	5.8	4.7	2.4	.67	.18			
3			0	14	5.7	4.5	2.4	.65	.18			
4			0	13	5.9	4.4	2.4	.65	.11			
5			0	11	7.0	4.3	2.4	.56	.11			
6			0	10	12	4.3	2.2	.56	.08			
7			0	9.7	8.2	4.3	2.2	.59	.08			
8			0	8.9	7.0	4.5	2.0	.57	.08			
9			0	8.5	6.5	4.5	2.0	.57	.08			
10			0	8.0	6.5	4.5	2.0	.47	.08			
11			0	7.5	6.0	4.1	2.2	.46	.08			
12			0	7.4	6.0	4.1	2.7	.44	.08			
13			0	7.2	6.0	4.1	2.3	.47	.05			
14			0	7.6	6.0	3.7	2.0	.47	.02			
15			0	7.0	6.0	3.3	1.8	.39	0			
16			0	6.9	5.5	3.2	1.7	.39	0			
17			0	6.8	5.5	3.1	1.7	.39	0			
18			0	6.5	5.5	3.1	1.7	.39	0			
19			0	6.5	5.0	3.0	1.8	.39	0			
20			0	6.5	5.0	2.8	1.7	.32	0			
21			0	6.5	5.5	3.1	1.7	.31	0			
22			0	6.3	5.0	3.0	1.5	.33	0			
23			7.6	6.0	5.0	3.0	1.3	.33	0			
24			56	6.0	5.5	3.0	1.2	.33	0			
25			126	6.0	5.5	2.7	1.2	.27	0			
26			68	6.0	5.0	2.7	1.1	.28	0			
27			174	6.4	5.0	2.7	.96	.28	0			
28			54	6.9	5.0	2.7	.92	.28	0			
29			26	6.3	5.4	3.0	.91	.26	0			
30			19	6.1	------	2.7	.78	.21	0			
31		------	16	6.0	------	2.7	------	.20	------			------
TOTAL	0	0	546.6	247.5	174.0	110.6	53.87	13.20	1.40	0	0	0
MEAN	0	0	17.6	7.98	6.00	3.57	1.80	.43	.047	0	0	0
MAX	0	0	174	14	12	4.8	2.7	.72	.19	0	0	0
MIN	0	0	0	6.0	5.0	2.7	.78	.20	0	0	0	0
AC-FT	0	0	1,080	491	345	219	107	26	2.8	0	0	0

CAL YR 1971 TOTAL 2,726.48 MEAN 7.47 MAX 174 MIN 0 AC-FT 5,410
WTR YR 1972 TOTAL 1,147.17 MEAN 3.13 MAX 174 MIN 0 AC-FT 2,280

PEAK DISCHARGE (BASE, 100 CFS)

DATE	TIME	G.H.	DISCHARGE	DATE	TIME	G.H.	DISCHARGE
12-24	1600	9.34	149	12-27	0515	9.85	402
12-25	1930	9.90	436				

11125500 LAKE CACHUMA NEAR SANTA YNEZ, CALIF.

LOCATION.--Lat 34°34'57", long 119°58'47", in Lomas de la Purification Grant, Santa Barbara County, at Cachuma Dam on Santa Ynez River, on upstream face near left end of dam, 6.1 miles east of Santa Ynez.

DRAINAGE AREA.--417 sq mi.

PERIOD OF RECORD.--November 1952 to current year. Prior to October 1960, published as at Cachuma Reservoir near Santa Ynez.

GAGE.--Water-stage recorder. Datum of gage is at mean sea level (Bureau of Reclamation bench mark). Prior to Oct. 1, 1965, nonrecording gage.

EXTREMES.--Current year: Maximum contents, 161,200 acre-ft Oct. 1 (elevation, 734.70 ft); minimum, 121,300 acre-ft Sept. 30 (elevation, 718.21 ft).
Period of record: Maximum contents, 221,100 acre-ft Feb. 24, 1969 (elevation, 755.11 ft); minimum since initial filling in April 1958, 117,900 acre-ft Nov. 13, 1965 (elevation, 716.63 ft).

REMARKS.--Reservoir is formed by earthfill dam. Storage began November 1952. Capacity table is based on surveys made in January 1953. Dead storage below outlet gate to river (elevation, 600 ft), 3,114 acre-ft, included in contents. Capacity below sill of inlet to Tecolote tunnel (elevation, 660 ft), 32,514 acre-ft; below spillway level (elevation, 720 ft), 125,292 acre-ft; below top of 4 radial gates (elevation, 750 ft), 204,874 acre-ft. Water is released from outlet to Santa Ynez River to satisfy downstream water rights. Water diverted to Tecolote tunnel for use by city of Santa Barbara and nearby communities, to Santa Ynez River Water Conservation District, and to Cachuma recreation area.

COOPERATION.--Reservoir elevation and diversion figures furnished by Bureau of Reclamation.

MONTHEND ELEVATION AND CONTENTS, WATER YEAR OCTOBER 1971 TO SEPTEMBER 1972

DATE	ELEVATION (FEET)a	CONTENTS (ACRE-FEET)	CHANGE IN CONTENTS (ACRE-FEET)	TOTAL DIVERSIONS (ACRE-FEET)
Sept. 30	734.75	161,300	-	-
Oct. 31	732.95	156,600	-4,700	3,550
Nov. 30	731.80	153,700	-2,900	2,300
Dec. 31	733.36	157,700	+4,000	1,600
CAL YR 1971	-	-	-23,700	29,200
Jan. 31	732.53	155,500	-2,200	722
Feb. 29	731.96	154,100	-1,400	924
Mar. 31	730.39	150,100	-4,000	2,840
Apr. 30	728.84	146,200	-3,900	2,800
May 31	726.99	141,700	-4,500	3,160
June 30	724.91	136,600	-5,100	3,550
July 31	722.58	131,200	-5,400	3,920
Aug. 31	720.00	125,400	-5,800	4,380
Sept. 30	718.21	121,300	-4,100	3,050
WTR YR 1972	-	-	-40,000	32,800

a Elevation at 2400.

11126000 SANTA YNEZ RIVER NEAR SANTA YNEZ, CALIF.

LOCATION.--Lat 34°35'21", long 119°59'16", in Canada de los Pinos Grant, Santa Barbara County, on right bank 0.7 miles downstream from Cachuma Dam, and 5.5 miles southeast of Santa Ynez.

DRAINAGE AREA.--422 sq mi.

PERIOD OF RECORD.--December 1928 to September 1931, October 1932 to current year.

GAGE.--Water-stage recorder. Datum of gage is 545.66 ft above mean sea level (Bureau of Reclamation bench mark). Prior to Oct. 1, 1955, at site 2.5 miles downstream at different datum. Oct. 1, 1955, to Sept. 16, 1969, at site 0.4 mile downstream at datum 7.2 ft higher.

EXTREMES.--Current year: Maximum discharge, 148 cfs Jan. 1 (gage height, 4.31 ft); no flow many days. Period of record: Maximum discharge, 79,000 cfs Jan. 25, 1969 (gage height, 22.00 ft, from floodmark, present datum), on basis of computation of maximum flow over dam; no flow at times in some years.

REMARKS.--Records fair. Flow regulated by Jameson Lake since December 1930, Gibraltar Reservoir, and Lake Cachuma since November 1952 (see sta 11121000, 11122000, 11125500). Water diverted out of basin from Jameson Lake, Gibraltar Reservoir, and Lake Cachuma to cities of Montecito, Santa Barbara, and to the Santa Ynez Valley for municipal supply. Some water pumped from wells along river banks for irrigation.

DISCHARGE, IN CUBIC FEET PER SECOND, WATER YEAR OCTOBER 1971 TO SEPTEMBER 1972

DAY	OCT	NOV	DEC	JAN	FEB	MAR	APR	MAY	JUN	JUL	AUG	SEP
1	0		0	141	15	17	11	8.7	5.6	.02	.26	.58
2	0		0	139	15	17	12	9.0	5.9	0	.62	.69
3	0		0	127	16	17	8.2	9.0	6.3	0	.81	.69
4	0		0	80	16	17	.54	8.5	6.2	3.8	.93	.75
5	0		0	58	17	17	.28	8.4	6.5	4.5	.97	.96
6	0		0	60	17	18	.43	7.8	8.0	5.3	1.0	1.3
7	0		0	77	12	20	.66	7.0	8.8	5.6	.94	1.9
8	0		0	95	2.3	20	.78	5.0	9.2	6.0	.29	2.1
9	0		0	72	.41	19	.77	.75	9.2	6.3	.03	2.6
10	0		0	29	1.5	22	2.7	.48	9.6	4.9	0	2.4
11	0		0	29	24	20	10	.48	9.5	2.5	0	2.1
12	8.0		0	29	26	20	9.7	.52	6.7	1.6	0	1.5
13	13		0	29	27	18	9.7	.51	3.3	1.6	0	1.0
14	16		0	29	26	13	9.7	.37	.41	1.7	0	.90
15	17		0	30	23	13	9.7	1.5	.01	1.8	3.0	.50
16	20		0	29	24	13	9.7	6.5	0	1.9	5.0	0
17	20		0	27	23	14	9.0	8.0	0	3.4	5.0	0
18	17		0	24	24	14	6.8	7.6	0	5.0	5.0	0
19	3.9		0	25	24	13	6.8	7.9	0	5.4	5.0	0
20	1.0		0	25	24	9.3	6.8	8.6	5.9	5.5	5.0	0
21	.24		0	25	23	9.3	6.8	8.6	6.0	5.1	2.5	0
22	.03		0	25	22	16	6.8	5.2	6.7	5.1	.70	0
23	0		0	26	22	16	6.8	.13	6.9	5.1	.41	0
24	0		0	19	21	17	7.1	0	6.7	3.5	.10	0
25	0		0	7.0	21	17	7.8	0	6.6	1.5	.03	0
26	0		.18	6.7	22	17	7.3	0	4.6	.75	0	1.0
27	0		20	6.4	22	17	7.7	0	3.0	.37	0	1.0
28	0		48	6.0	20	12	9.1	0	.96	.14	0	1.0
29	0		61	5.5	16	11	8.6	.18	.44	.07	0	1.1
30	0		105	5.2	------	12	8.6	4.2	.24	.05	.12	1.1
31	0	------	129	8.5	------	11	------	5.2	------	.06	.36	------
TOTAL	116.17	0	363.18	1,294.3	546.21	486.6	201.86	130.12	143.26	88.56	38.07	25.17
MEAN	3.75	0	11.7	41.8	18.8	15.7	6.73	4.20	4.78	2.86	1.23	.84
MAX	20	0	129	141	27	22	12	9.0	9.6	6.3	5.0	2.6
MIN	0	0	0	5.2	.41	9.3	.28	0	0	0	0	0
AC-FT	230	0	720	2,570	1,080	965	400	258	284	176	76	50

CAL YR 1971 TOTAL 5,037.37 MEAN 13.8 MAX 129 MIN 0 AC-FT 9,990
WTR YR 1972 TOTAL 3,433.50 MEAN 9.38 MAX 141 MIN 0 AC-FT 6,810

11128250 ALAMO PINTADO CREEK NEAR SOLVANG, CALIF.

LOCATION.--Lat 34°37'06", long 120°07'11", in SE¼NW¼NW¼ sec.11, T.6 N., R.31 W., Santa Barbara County, on right bank at downstream side of bridge on Alamo Pintado Road, 1.5 miles northeast of Solvang.

DRAINAGE AREA.--29.4 sq mi.

PERIOD OF RECORD.--October 1970 to current year.

GAGE.--Water-stage recorder. Datum of gage is 540.49 ft above mean sea level (Santa Barbara County bench mark).

EXTREMES.--Current year: Maximum discharge, 0.75 cfs Dec. 27 (gage height, 2.92 ft); no flow most of year.
Period of record: Maximum discharge, 12 cfs Dec. 21, 1970 (gage height, 2.89 ft); no flow most of each year.
Flood of Jan. 25, 1969, reached a stage of 10.32 ft.

REMARKS.--Records fair. No regulation above station. Pumping from wells along stream for irrigation.

DISCHARGE, IN CUBIC FEET PER SECOND, WATER YEAR OCTOBER 1971 TO SEPTEMBER 1972

DAY	OCT	NOV	DEC	JAN	FEB	MAR	APR	MAY	JUN	JUL	AUG	SEP
1			0			0				0	0	
2			0			0				0	0	
3			0			0				0	0	
4			0			0				0	0	
5			0			0				0	0	
6			0			0				0	0	
7			0			0				0	0	
8			0			0				0	0	
9			0			0				.01	.05	
10			0			0				.01	0	
11			0			0				0	0	
12			0			0				0	0	
13			0			0				0	0	
14			0			0				0	0	
15			0			0				0	0	
16			0			0				0	0	
17			0			0				0	0	
18			0			0				0	0	
19			0			0				0	0	
20			0			0				0	0	
21			0			0				0	0	
22			0			0				0	0	
23			0			0				0	0	
24			0			0				0	0	
25			0			0				0	0	
26			0			0				0	.01	
27			.02			0				0	0	
28			0			0				0	0	
29			0			0				0	0	
30			0		------	0				0	0	
31		------	0		------	.01	------		------	0	0	------
TOTAL	0	0	.02	0	0	.01	0	0	0	.02	.06	0
MEAN	0	0	.0006	0	0	.0003	0	0	0	.0006	.002	0
MAX	0	0	.02	0	0	.01	0	0	0	.01	.05	0
MIN	0	0	0	0	0	0	0	0	0	0	0	0
AC-FT	0	0	.04	0	0	.02	0	0	0	.04	.1	0

CAL YR 1971 TOTAL 0.02 MEAN .0001 MAX .02 MIN 0 AC-FT .04
WTR YR 1972 TOTAL 0.11 MEAN .0003 MAX .05 MIN 0 AC-FT .2

PEAK DISCHARGE (BASE, 10 CFS).--No peak above base.

11128300 ALISAL RESERVOIR NEAR SOLVANG, CALIF.

LOCATION.--Lat 34°32'56", long 120°07'45", in NW¼NW¼NE¼ sec.4, T.5 N., R.31 W., Santa Barbara County, in cove, on right bank 0.4 mile upstream from reservoir spillway, 2.2 miles south of Alisal Creek, and 3 miles south of Solvang.

DRAINAGE AREA.--7.83 sq mi.

PERIOD OF RECORD.--December 1971 to September 1972.

GAGE.--Water-stage recorder. Datum of gage is at mean sea level.

EXTREMES.--Maximum contents during period, 896 acre-ft Feb. 29 (elevation, 580.12 ft); minimum, 756 acre-ft Sept. 30 (elevation, 577.32 ft).

REMARKS.--Lake is formed by earthfill dam. Storage began Dec. 19, 1970. Usable capacity, 2,260 acre-ft between elevations 555.70 (bottom of outlet gate) and 599.88 ft (crest of spillway). Dead storage, 110 acre-ft. Inflow must total 150 acre-ft during any one month between November and June to store flow for year.

MONTHEND ELEVATION AND CONTENTS, DECEMBER 1971 TO SEPTEMBER 1972

Date	Elevation (feet)a	Contents (acre-feet)	Change in contents (acre-feet)
Dec. 31, 1971.....	578.99	840	-
Jan. 31, 1972.....	579.82	881	+41
Feb. 29.....	580.12	896	+15
Mar. 31.....	580.07	894	-2
Apr. 30.....	579.85	882	-12
May 31.....	579.41	860	-22
June 30.....	578.91	836	-24
July 31.....	578.35	808	-28
Aug. 31.....	577.73	776	-32
Sept. 30.....	577.32	756	-20

a Elevation at 1800.

NOTE.--Water level between Dec. 19, 1970, and Dec. 27, 1971 was below the minimum recordable elevation 575.50 ft (668 acre-ft).

11128400 ALISAL CREEK NEAR SOLVANG, CALIF.

LOCATION.--Lat 34°34'52", long 120°08'41", in Nojoqui Grant, Santa Barbara County, on right bank at foot-bridge, 0.3 mile upstream from mouth, and 1.0 mile southwest of Solvang.

DRAINAGE AREA.--12.3 sq mi.

PERIOD OF RECORD.--October 1954 to September 1955, October 1955 to September 1956 (monthly discharge only), October 1956 to September 1972 (discontinued).

GAGE.--Water-stage recorder. Datum of gage is 378.73 ft above mean sea level. Prior to Dec. 25, 1955, at site 50 ft upstream at different datum (destroyed by flood). Oct. 1, 1956, to Jan. 23, 1961, at datum 1.0 ft higher.

AVERAGE DISCHARGE.--16 years, (1954-70), 6.53 cfs (4,730 acre-ft per year); median of yearly mean discharges, 2.0 cfs (1,400 acre-ft per year).

EXTREMES.--Current year: Maximum discharge, 354 cfs Dec. 26 (gage height, 3.25 ft); maximum gage height, 4.72 ft Dec. 27 (backwater from debris); no flow most of year.
Period of record: Maximum discharge, 4,960 cfs Jan. 25, 1969 (gage height, 8.50 ft), from rating curve extended above 1,840 cfs on basis of slope-conveyance measurement of maximum flow; no flow for several months in each year.

REMARKS.--Records poor. Flow partially regulated by Alisal Reservoir since December 1970 (capacity, 2,400 acre-ft). At times waste irrigation water pumped from Santa Ynez River causes minor flow.

DISCHARGE, IN CUBIC FEET PER SECOND, WATER YEAR OCTOBER 1971 TO SEPTEMBER 1972

DAY	OCT	NOV	DEC	JAN	FEB	MAR	APR	MAY	JUN	JUL	AUG	SEP
1			0									
2			0									
3			0									
4			0									
5			0									
6			0									
7			0									
8			0									
9			0									
10			0									
11			0									
12			0									
13			0									
14			0									
15			0									
16			0									
17			0									
18			0									
19			0									
20			0									
21			0									
22			0									
23			0									
24			0									
25			.38									
26			15									
27			38									
28			3.1									
29			0									
30			0		------							
31		------	0		------		------		------			------
TOTAL	0	0	56.48	0	0	0	0	0	0	0	0	0
MEAN	0	0	1.82	0	0	0	0	0	0	0	0	0
MAX	0	0	38	0	0	0	0	0	0	0	0	0
MIN	0	0	0	0	0	0	0	0	0	0	0	0
AC-FT	0	0	112	0	0	0	0	0	0	0	0	0

CAL YR 1971 TOTAL 56.60 MEAN .16 MAX 38 MIN 0 AC-FT 112
WTR YR 1972 TOTAL 56.48 MEAN .15 MAX 38 MIN 0 AC-FT 112

PEAK DISCHARGE (BASE, 100 CFS).--Dec. 26 (2345) 354 cfs (3.25 ft).

11128500 SANTA YNEZ RIVER AT SOLVANG, CALIF.

LOCATION.--Lat 34°35'06", long 120°08'37", in San Carlos de Jonata Grant, Santa Barbara County, on downstream side of right abutment of Mission bridge, 25 ft downstream from Alisal Creek, and 0.8 mile southwest of Solvang.

DRAINAGE AREA.--579 sq mi.

PERIOD OF RECORD.--October 1928 to November 1936, June 1937 to November 1940 (irrigation seasons only), October 1946 to current year.

GAGE.--Water-stage recorder. Datum of gage is 362.43 ft above mean sea level. Various datums used during period of record. July 29 to Sept. 30, 1953, auxiliary water-stage recorder 750 ft upstream at different datum. Oct. 1, 1953, to Sept. 30, 1968, water-stage recorder at datum 2.00 ft higher.

EXTREMES.--Current year: Maximum discharge, 555 cfs Dec. 27 (gage height, 3.87 ft); no flow for several months.
1928-36, 1946 to current year: Maximum discharge, 82,000 cfs (estimated) Jan. 25, 1969 (gage height, 17.1 ft, from floodmark); no flow for several months in many years.

REMARKS.--Records poor. Flow regulated by Jameson Lake, Gibraltar Reservoir, and since November 1952 by Lake Cachuma (see sta 11121000, 11122000, 11125500). Water diverted out of basin from Jameson Lake, Gibraltar Reservoir, and Lake Cachuma to cities of Montecito, Santa Barbara, and Goleta for municipal supply. Some water for irrigation pumped from wells along banks of river in valley upstream.

DISCHARGE, IN CUBIC FEET PER SECOND, WATER YEAR OCTOBER 1971 TO SEPTEMBER 1972

DAY	OCT	NOV	DEC	JAN	FEB	MAR	APR	MAY	JUN	JUL	AUG	SEP
1			0	28	13	14	2.0					
2			0	64	15	14	2.0					
3			0	146	14	14	1.0					
4			0	97	15	14	1.0					
5			0	58	15	13	.50					
6			0	66	16	13	.40					
7			0	61	16	13	.30					
8			0	66	16	13	.27					
9			0	62	16	12	.77					
10			0	43	15	12	.77					
11			0	34	15	11	.77					
12			0	32	15	11	.84					
13			0	29	17	10	1.1					
14			0	27	18	10	1.0					
15			0	28	18	9.0	.90					
16			0	31	19	9.0	.81					
17			0	31	21	8.0	.68					
18			0	29	18	8.0	.72					
19			0	27	18	7.0	.61					
20			0	26	18	7.0	.40					
21			0	25	18	6.0	.43					
22			0	24	19	5.0	.28					
23			0	24	19	4.0	.31					
24			0	22	19	4.0	.18					
25			0	19	19	4.0	.13					
26			10	16	18	4.0	.01					
27			199	14	18	3.0	0					
28			23	12	17	3.0	0					
29			11	12	16	3.0	0					
30			8.2	13	------	2.0	0					
31		------	8.5	13	------	2.0	------		------			------
TOTAL	0	0	259.7	1,179	491	262.0	18.18	0	0	0	0	0
MEAN	0	0	8.38	38.0	16.9	8.45	.61	0	0	0	0	0
MAX	0	0	199	146	21	14	2.0	0	0	0	0	0
MIN	0	0	0	12	13	2.0	0	0	0	0	0	0
AC-FT	0	0	515	2,340	974	520	36	0	0	0	0	0

CAL YR 1971 TOTAL 3,725.05 MEAN 10.2 MAX 199 MIN 0 AC-FT 7,390
WTR YR 1972 TOTAL 2,209.88 MEAN 6.04 MAX 199 MIN 0 AC-FT 4,380

11129800 ZACA CREEK NEAR BUELLTON, CALIF.

LOCATION.--Lat 34°38'55", long 120°11'00", in San Carlos de Jonata Grant, Santa Barbara County, on upstream end of left pier of bridge on frontage road, 0.9 mile upstream from Dry Creek, 2.4 miles north of Buellton, and 4.0 miles upstream from mouth.

DRAINAGE AREA.--32.8 sq mi.

PERIOD OF RECORD.--September 1963 to current year.

GAGE.--Water-stage recorder. Datum of gage is 471.54 ft above mean sea level.

AVERAGE DISCHARGE.--9 years, 1.15 cfs (833 acre-ft per year).

EXTREMES.--Current year: Maximum discharge, 5.0 cfs Dec. 27 (gage height, 2.34 ft); no flow most of year. Period of record: Maximum discharge, 1,390 cfs Feb. 24, 1969 (gage height, 9.20 ft); no flow most of each year.

REMARKS.--Records fair. Slight regulation by Zaca Lake. Some pumping from wells along stream for irrigation above station.

DISCHARGE, IN CUBIC FEET PER SECOND, WATER YEAR OCTOBER 1971 TO SEPTEMBER 1972

DAY	OCT	NOV	DEC	JAN	FEB	MAR	APR	MAY	JUN	JUL	AUG	SEP
1			0									
2			0									
3			0									
4			0									
5			0									
6			0									
7			0									
8			0									
9			0									
10			0									
11			0									
12			0									
13			0									
14			0									
15			0									
16			0									
17			0									
18			0									
19			0									
20			0									
21			0									
22			0									
23			0									
24			0									
25			0									
26			.02									
27			1.1									
28			.10									
29			0									
30			0		------							
31		------	0		------		------		------			------
TOTAL	0	0	1.22	0	0	0	0	0	0	0	0	0
MEAN	0	0	.039	0	0	0	0	0	0	0	0	0
MAX	0	0	1.1	0	0	0	0	0	0	0	0	0
MIN	0	0	0	0	0	0	0	0	0	0	0	0
AC-FT	0	0	2.4	0	0	0	0	0	0	0	0	0

CAL YR 1971 TOTAL 1.22 MEAN .0030 MAX 1.1 MIN 0 AC-FT 2.4
WTR YR 1972 TOTAL 1.22 MEAN .0030 MAX 1.1 MIN 0 AC-FT 2.4

PEAK DISCHARGE (BASE, 10 CFS).--No peak above base.

11130500 SANTA YNEZ RIVER NEAR BUELLTON, CALIF.

LOCATION.--Lat 34°36'38", long 120°14'53", in Santa Rosa Grant, Santa Barbara County, on left bank 0.5 mile downstream from Canada de los Palos Blancos, and 3 miles west of Buellton.

DRAINAGE AREA.--668 sq mi.

PERIOD OF RECORD.--June 1948 to September 1952 (irrigation seasons only); October 1952 to September 1965; October 1965 to current year (wading stages only).

GAGE.--Water-stage recorder. Datum of gage is 260.68 ft above mean sea level (Bureau of Reclamation bench mark). See WSP 1928 for history of changes prior to Mar. 29, 1962. Mar. 29, 1962, to Oct. 1, 1969, at site 100 ft upstream at datum 1 ft lower.

REMARKS.--Records good. This is a project station. Discharge above wading stages not generally reported herein. Flow regulated by Jameson Lake, Gibraltar Reservoir, and since November 1952 by Lake Cachuma (see sta 11121000, 11122000, 11125500). Water diverted out of basin from Jameson Lake, Gibraltar Reservoir, and Lake Cachuma to cities of Montecito, Santa Barbara, and Goleta for municipal supply. Water pumped from wells along banks of river for irrigation in valley upstream.

DISCHARGE, IN CUBIC FEET PER SECOND, WATER YEAR OCTOBER 1971 TO SEPTEMBER 1972

DAY	OCT	NOV	DEC	JAN	FEB	MAR	APR	MAY	JUN	JUL	AUG	SEP
1			0	15	16	15	3.6	1.2				
2			0	48	15	12	3.4	1.0				
3			0	74	16	11	3.3	.75				
4			0	73	17	9.6	3.1	.55				
5			0	54	18	8.8	3.0	.41				
6			0	42	18	8.3	2.9	.28				
7			0	40	18	7.9	2.8	.15				
8			0	49	18	7.1	2.7	.60				
9			0	62	18	5.8	2.6	1.1				
10			0	54	17	5.2	2.5	1.0				
11			0	32	17	5.0	2.2	1.3				
12			0	27	17	4.8	2.2	1.2				
13			0	26	19	5.4	1.8	1.1				
14			.11	25	22	6.0	1.5	.85				
15			2.0	24	24	6.6	1.6	.65				
16			3.6	24	25	6.4	1.5	.65				
17			5.3	24	23	6.8	1.4	.26				
18			6.7	24	25	6.1	1.6	.03				
19			7.5	23	24	5.9	1.7	0				
20			8.1	22	22	6.1	1.6	.05				
21			8.9	22	22	6.1	1.6	.03				
22			13	22	21	6.2	1.7	0				
23			13	23	20	5.9	1.6	0				
24			14	23	19	5.5	1.6	0				
25			17	23	19	5.8	1.5	0				
26			20	21	17	5.6	1.4	0				
27			142	20	16	5.7	1.5	0				
28			31	19	16	5.6	1.5	0				
29			17	18	17	5.2	1.5	0				
30			13	18	------	4.8	1.5	0				
31		------	12	17	------	4.0	------	0	------			------
TOTAL	0	0	334.21	988	556	210.2	62.4	13.16	0	0	0	0
MEAN	0	0	10.8	31.9	19.2	6.78	2.08	.42	0	0	0	0
MAX	0	0	142	74	25	15	3.6	1.3	0	0	0	0
MIN	0	0	0	15	15	4.0	1.4	0	0	0	0	0
AC-FT	0	0	663	1,960	1,100	417	124	26	0	0	0	0

CAL YR 1971 TOTAL 3,732.04 MEAN 10.2 MAX 142 MIN 0 AC-FT 7,400
WTR YR 1972 TOTAL 2,163.97 MEAN 5.91 MAX 142 MIN 0 AC-FT 4,290

11131500 SANTA YNEZ RIVER AT COOPER'S REEF, NEAR LOMPOC, CALIF.

LOCATION.--Lat 34°36'48", long 120°21'23", near boundary of Canada de Salsipuedes Grant, Santa Barbara County, on right bank 0.6 mile upstream from Canada de la Vina, and 6 miles east of Lompoc.

DRAINAGE AREA.--708 sq mi.

PERIOD OF RECORD.--October 1954 to current year.

GAGE.--Water-stage recorder. Altitude of gage is 160 ft, revised (from topographic map). Prior to Sept. 18, 1969, at site 100 ft downstream at datum about 0.6 ft higher (reference marks destroyed by floods of 1969).

EXTREMES.--Current year: Maximum discharge, 146 cfs Dec. 28 (gage height, 3.97 ft); no flow for several months. Period of record: Maximum discharge, 81,000 cfs (estimated) Jan. 25, 1969 (gage height, 22.5 ft, site and datum then in use, from floodmark); no flow for several months in some years.

REMARKS.--Records fair. Flow regulated by Jameson Lake, Gibraltar Reservoir, and Lake Cachuma (see sta 11121000, 11122000, 11125500). Water diverted out of basin from Jameson Lake, Gibraltar Reservoir, and Lake Cachuma to cities of Montecito, Santa Barbara, and Goleta for municipal supply. Water pumped from wells along banks of river for irrigation in valley upstream.

DISCHARGE, IN CUBIC FEET PER SECOND, WATER YEAR OCTOBER 1971 TO SEPTEMBER 1972

DAY	OCT	NOV	DEC	JAN	FEB	MAR	APR	MAY	JUN	JUL	AUG	SEP
1	0	.01	.04	2.1	16	17	.15					
2	.01	.01	.07	5.6	15	14	.11					
3	.01	.01	.05	42	13	9.1	.11					
4	0	.01	.04	83	14	5.6	.07					
5	.01	0	.03	68	16	4.3	.09					
6	0	0	.02	42	17	3.2	.12					
7	.02	0	.01	34	17	2.5	.13					
8	.02	0	0	34	17	2.1	.08					
9	.02	0	0	65	18	1.9	.06					
10	.02	0	0	84	16	1.9	.05					
11	.02	.01	0	56	12	1.4	.06					
12	.03	.02	0	48	11	1.0	.04					
13	.03	.02	0	48	9.6	1.1	.04					
14	.03	.02	0	50	9.8	.95	.03					
15	.04	.02	0	44	11	.79	.03					
16	.03	.02	0	44	12	.45	.02					
17	.04	.02	0	42	12	.30	.02					
18	.03	.02	0	42	11	.26	.02					
19	.03	.02	0	42	14	.62	.02					
20	.03	.02	0	40	14	.54	.02					
21	.02	.02	.01	38	14	.30	.03					
22	.02	.03	.08	40	16	.40	.04					
23	.03	.03	.04	40	15	.59	.05					
24	.01	.04	.05	40	16	.64	.05					
25	.02	.05	.11	40	17	.31	.06					
26	.01	.05	.12	40	16	.15	.06					
27	.01	.05	6.2	33	16	.13	.06					
28	.02	.05	61	26	16	.18	.04					
29	.02	.06	8.8	23	15	.29	.02					
30	.02	.05	4.4	19	------	.34	.01					
31	.02	------	2.5	18	------	.26	------		------			------
TOTAL	.62	.66	83.57	1,272.7	416.4	72.60	1.69	0	0	0	0	0
MEAN	.020	.022	2.70	41.1	14.4	2.34	.056	0	0	0	0	0
MAX	.04	.06	61	84	18	17	.15	0	0	0	0	0
MIN	0	0	0	2.1	9.6	.13	.01	0	0	0	0	0
AC-FT	1.2	1.3	166	2,520	826	144	3.4	0	0	0	0	0

CAL YR 1971 TOTAL 3,262.43 MEAN 8.94 MAX 61 MIN 0 AC-FT 6,470
WTR YR 1972 TOTAL 1,848.24 MEAN 5.05 MAX 84 MIN 0 AC-FT 3,670

11132500 SALSIPUEDES CREEK NEAR LOMPOC, CALIF.

LOCATION.--Lat 34°35'19", long 120°24'27", in W½ sec.24, T.6 N., R.34 W., Santa Barbara County, on right bank at bridge on Jalama Road, 0.4 mile downstream from El Jaro Creek, and 4.4 miles southeast of Lompoc.

DRAINAGE AREA.--47.1 sq mi.

PERIOD OF RECORD.--January 1941 to current year.

GAGE.--Water-stage recorder and concrete low-water control. Altitude of gage is 220 ft, revised (from topographic map).

AVERAGE DISCHARGE.--31 years, 8.08 cfs (5,850 acre-ft per year); median of yearly mean discharges, 3.1 cfs (2,200 acre-ft per year).

EXTREMES.--Current year: Maximum discharge, 720 cfs Dec. 27 (gage height, 4.40 ft); minimum daily, 0.01 cfs Aug. 16 to Sept. 30.
Period of record: Maximum discharge, 11,400 cfs Mar. 15, 1952 (gage height, 20.8 ft); no flow at times in some years.

REMARKS.--Records fair. No regulation above station. Small diversions for irrigation above station.

DISCHARGE, IN CUBIC FEET PER SECOND, WATER YEAR OCTOBER 1971 TO SEPTEMBER 1972

DAY	OCT	NOV	DEC	JAN	FEB	MAR	APR	MAY	JUN	JUL	AUG	SEP
1	.06	.05	.06	1.4	.96	.72	.33	.14	.03	.02	.02	.01
2	.06	.05	.07	1.2	.74	.70	.31	.13	.03	.02	.02	.01
3	.06	.05	.07	1.2	.75	.71	.33	.12	.03	.02	.02	.01
4	.06	.05	.07	1.0	.82	.72	.33	.11	.03	.02	.02	.01
5	.06	.05	.07	1.0	.95	.72	.33	.10	.03	.02	.02	.01
6	.06	.05	.07	1.1	1.1	.72	.34	.09	.03	.02	.02	.01
7	.06	.05	.07	1.2	.87	.72	.32	.08	.03	.02	.02	.01
8	.06	.05	.07	1.0	.86	.68	.30	.07	.03	.02	.02	.01
9	.06	.05	.07	.90	.86	.71	.28	.07	.03	.02	.02	.01
10	.06	.05	.07	.90	.72	.71	.21	.07	.03	.02	.02	.01
11	.06	.06	.07	1.0	.72	.67	.38	.06	.03	.02	.02	.01
12	.06	.07	.07	1.0	.72	.70	.43	.06	.02	.02	.02	.01
13	.06	.07	.08	1.0	.72	.70	.42	.05	.02	.02	.02	.01
14	.06	.07	.08	1.0	.72	.72	.37	.05	.02	.02	.02	.01
15	.05	.07	.08	1.0	.72	.67	.32	.05	.02	.02	.02	.01
16	.05	.06	.08	1.0	.72	.55	.29	.04	.02	.02	.01	.01
17	.05	.06	.08	.86	.72	.53	.27	.04	.02	.02	.01	.01
18	.05	.06	.08	.89	.72	.51	.26	.04	.02	.02	.01	.01
19	.05	.06	.08	.89	.72	.49	.26	.04	.02	.02	.01	.01
20	.05	.06	.08	.92	.72	.54	.27	.03	.02	.02	.01	.01
21	.05	.06	.08	.93	.73	.57	.23	.03	.02	.02	.01	.01
22	.05	.06	10	1.0	.83	.55	.26	.03	.02	.02	.01	.01
23	.05	.06	6.6	.99	.80	.49	.21	.03	.02	.02	.01	.01
24	.05	.06	2.5	.87	.77	.34	.22	.03	.02	.02	.01	.01
25	.05	.06	12	.96	.80	.42	.20	.03	.02	.02	.01	.01
26	.05	.06	9.0	1.0	.85	.40	.19	.03	.02	.02	.01	.01
27	.05	.06	116	1.0	.86	.35	.18	.03	.02	.02	.01	.01
28	.05	.06	8.0	1.0	.83	.32	.17	.03	.02	.02	.01	.01
29	.05	.06	4.2	.96	.72	.29	.16	.03	.02	.02	.01	.01
30	.05	.06	1.9	.86	------	.37	.15	.03	.02	.02	.01	.01
31	.05	------	1.7	.86	------	.34	------	.03	------	.02	.01	------
TOTAL	1.69	1.74	173.45	30.89	23.02	17.63	8.32	1.77	.71	.62	.46	.30
MEAN	.055	.058	5.60	1.00	.79	.57	.28	.057	.024	.020	.015	.010
MAX	.06	.07	116	1.4	1.1	.72	.43	.14	.03	.02	.02	.01
MIN	.05	.05	.06	.86	.72	.29	.15	.03	.02	.02	.01	.01
AC-FT	3.4	3.5	344	61	46	35	17	3.5	1.4	1.2	.9	.6

CAL YR 1971 TOTAL 491.25 MEAN 1.35 MAX 116 MIN 0 AC-FT 974
WTR YR 1972 TOTAL 260.60 MEAN .71 MAX 116 MIN .01 AC-FT 517

PEAK DISCHARGE (BASE, 100 CFS).--Dec. 27 (0115) 720 cfs (4.40 ft).

11133000 SANTA YNEZ RIVER AT NARROWS, NEAR LOMPOC, CALIF.

LOCATION.--Lat 34°38'16", long 120°25'32", in Canada de Salsipuedes Grant, Santa Barbara County, on left bank 0.5 mile upstream from State Highway 150, 1.9 miles east of Lompoc, and 1.9 miles downstream from Salsipuedes Creek.

DRAINAGE AREA.--789 sq mi.

PERIOD OF RECORD.--May 1947 to November 1951 (irrigation seasons only). May 1952 to September 1963, October 1964 to current year. Records equivalent, excepting low-flow periods, to those published as "near Lompoc" (sta 11133500), November to December 1906, October 1907 to September 1918, May 1925 to September 1960.

GAGE.--Water-stage recorder. Altitude of gage is 90 ft (from topographic map). See WSP 1715 for history of changes prior to Oct. 1, 1961. Since Oct. 1, 1961, at various sites and datums within 0.1 mile of present site and supplementary water-stage recorder at site 0.5 mile downstream at datum 79.25 ft above mean sea level (now used for high-water periods).

EXTREMES.--Current year: Maximum discharge, 1,070 cfs Dec. 27 (gage height, 8.55 ft); no flow for several months.
1952-63, 1964 to current year: Maximum discharge, 80,000 cfs Jan. 25, 1969 (gage height, 24.20 ft, from supplementary gage); no flow at times in each year.
Flood of Jan. 9, 1907, 120,000 cfs (gage height, 22.0 ft, site and datum then in use), from discharge-mean depth study.

REMARKS.--Records good below 100 cfs and fair above. Flow regulated by Jameson Lake, Gibraltar Reservoir, and since November 1952 by Lake Cachuma (see sta 11121000, 11122000, 11125500). Water diverted out of Jameson Lake, Gibraltar Reservoir, and Lake Cachuma to cities of Montecito, Santa Barbara, and Goleta for municipal supply. Water pumped from wells along banks of river for irrigation in valley upstream.

DISCHARGE, IN CUBIC FEET PER SECOND, WATER YEAR OCTOBER 1971 TO SEPTEMBER 1972

DAY	OCT	NOV	DEC	JAN	FEB	MAR	APR	MAY	JUN	JUL	AUG	SEP
1			0	.98	15	9.8	.43					
2			0	.63	13	9.0	.39					
3			0	3.8	12	6.6	.38					
4			0	28	12	4.6	.38					
5			0	47	13	3.1	.33					
6			0	39	14	2.3	.31					
7			0	35	15	1.9	.26					
8			0	34	16	1.7	.26					
9			0	42	17	1.4	.26					
10			0	55	17	1.2	.22					
11			0	53	14	1.1	.24					
12			0	36	13	1.1	.24					
13			0	30	12	.97	.21					
14			0	27	11	.93	.20					
15			0	25	11	.79	.17					
16			0	25	12	.79	.17					
17			0	25	13	.74	.17					
18			0	25	13	.79	.15					
19			0	24	12	.71	.14					
20			0	23	14	.71	.12					
21			0	23	14	.63	.12					
22			0	23	14	.64	.12					
23			0	22	14	.59	.10					
24			0	22	15	.59	.09					
25			0	23	15	.57	.07					
26			0	23	14	.57	.07					
27			313	22	13	.51	.05					
28			21	19	12	.49	.03					
29			6.9	18	11	.51	.02					
30			2.3	16	------	.51	.01					
31		------	1.1	15	------	.44	------		------			------
TOTAL	0	0	344.3	804.41	391	56.28	5.71	0	0	0	0	0
MEAN	0	0	11.1	25.9	13.5	1.82	.19	0	0	0	0	0
MAX	0	0	313	55	17	9.8	.43	0	0	0	0	0
MIN	0	0	0	.63	11	.44	.01	0	0	0	0	0
AC-FT	0	0	683	1,600	776	112	11	0	0	0	0	0

CAL YR 1971 TOTAL 3,173.24 MEAN 8.69 MAX 313 MIN 0 AC-FT 6,290
WTR YR 1972 TOTAL 1,601.70 MEAN 4.38 MAX 313 MIN 0 AC-FT 3,180

11133700 PURISIMA CREEK NEAR LOMPOC, CALIF.

LOCATION.--Lat 34°41'34", long 120°25'51", in La Purisima Grant, Santa Barbara County, on right bank 1.1 miles northeast of junction of Buener Road and Lompoc-Casmalia Road, and 4.0 miles northeast of Lompoc.

DRAINAGE AREA.--4.75 sq mi.

PERIOD OF RECORD.--October 1970 to current year.

GAGE.--Water-stage recorder. Altitude of gage is 270 ft (from topographic map).

EXTREMES.--Current year: Maximum discharge, 52 cfs Dec. 27 (gage height, 2.00 ft); no flow most of year.
Period of record: Maximum discharge, 52 cfs Dec. 27, 1971 (gage height, 2.00 ft); no flow most of each year.

REMARKS.--Records fair. No regulation or diversion above station.

DISCHARGE, IN CUBIC FEET PER SECOND, WATER YEAR OCTOBER 1971 TO SEPTEMBER 1972

DAY	OCT	NOV	DEC	JAN	FEB	MAR	APR	MAY	JUN	JUL	AUG	SEP
1			0	.01								
2			.06	.01								
3			0	.02								
4			0	0								
5			0	0								
6			0	0								
7			0	0								
8			0	0								
9			0	0								
10			0	0								
11			0	0								
12			.06	0								
13			.02	0								
14			0	0								
15			0	0								
16			0	0								
17			0	0								
18			0	0								
19			0	0								
20			0	0								
21			0	0								
22			.25	0								
23			.02	0								
24			.14	0								
25			.34	0								
26			.63	0								
27			5.3	0								
28			.15	0								
29			.03	0								
30			.02	0	------							
31		------	.01	0	------		------		------			------
TOTAL	0	0	7.03	.04	0	0	0	0	0	0	0	0
MEAN	0	0	.23	.001	0	0	0	0	0	0	0	0
MAX	0	0	5.3	.02	0	0	0	0	0	0	0	0
MIN	0	0	0	0	0	0	0	0	0	0	0	0
AC-FT	0	0	14	.08	0	0	0	0	0	0	0	0

CAL YR 1971 TOTAL 7.03 MEAN .019 MAX 5.3 MIN 0 AC-FT 14
WTR YR 1972 TOTAL 7.07 MEAN .019 MAX 5.3 MIN 0 AC-FT 14

PEAK DISCHARGE (BASE, 20 CFS).--Dec. 27 (0145) 52 cfs (2.00 ft).

11134500 SANTA YNEZ RIVER AT 13TH STREET, NEAR LOMPOC, CALIF.

LOCATION.--Lat 34°40'06", long 120°28'29", in Lompoc Grant, Santa Barbara County, on right bank at 13th Street crossing, 2.3 miles northwest of Lompoc.

DRAINAGE AREA.--820 sq mi.

PERIOD OF RECORD.--October 1954 to current year.

GAGE.--Water-stage recorder. Altitude of gage is 45 ft, revised (from topographic map). Since Oct. 1, 1954, at various sites within 300 ft at different datums.

EXTREMES.--Current year: Maximum discharge, 400 cfs (estimated) Dec. 27 (gage height, not determined); no flow most of year.
Period of record: Maximum discharge, 79,000 cfs (estimated) Jan. 25, 1969 (gage height, not determined); no flow for several months in each year.

REMARKS.--Records poor. This is a project station. Discharge above wading stages generally not reported herein. Flow regulated by Jameson Lake, Gibraltar Reservoir, and Lake Cachuma (see sta 11121000, 11122000, 11125500). Water diverted out of basin from Jameson Lake, Gibraltar Reservoir, and Lake Cachuma to cities of Montecito, Santa Barbara, and Goleta for municipal supply. Water pumped from wells along bank of river for irrigation in valley upstream.

DISCHARGE, IN CUBIC FEET PER SECOND, WATER YEAR OCTOBER 1971 TO SEPTEMBER 1972

DAY	OCT	NOV	DEC	JAN	FEB	MAR	APR	MAY	JUN	JUL	AUG	SEP
1			0	0								
2			0	0								
3			0	0								
4			0	.78								
5			0	14								
6			0	11								
7			0	8.2								
8			0	7.1								
9			0	9.3								
10			0	20								
11			0	20								
12			0	5.3								
13			0	.66								
14			0	.12								
15			0	.06								
16			0	0								
17			0	0								
18			0	0								
19			0	.84								
20			0	1.1								
21			0	.28								
22			0	.31								
23			0	.01								
24			0	.29								
25			0	.65								
26			0	.69								
27			143	.28								
28			25	.01								
29			.96	0								
30			.02	0	------							
31		------	0	0	------		------		------			------
TOTAL	0	0	168.98	100.98	0	0	0	0	0	0	0	0
MEAN	0	0	5.45	3.26	0	0	0	0	0	0	0	0
MAX	0	0	143	20	0	0	0	0	0	0	0	0
MIN	0	0	0	0	0	0	0	0	0	0	0	0
AC-FT	0	0	335	200	0	0	0	0	0	0	0	0

CAL YR 1971 TOTAL 1,136.73 MEAN 3.11 MAX 143 MIN 0 AC-FT 2,250
WTR YR 1972 TOTAL 269.96 MEAN .74 MAX 143 MIN 0 AC-FT 535

NOTE.--No gage-height record Oct. 1 to Dec. 28.

11134800 MIGUELITO CREEK AT LOMPOC, CALIF.

LOCATION.--Lat 34°37'57", long 120°27'51", in Lompoc Grant, Santa Barbara County, on right bank at upstream end of debris dam, and 1,500 ft south of Lompoc Union High School.

DRAINAGE AREA.--11.6 sq mi.

PERIOD OF RECORD.--October 1970 to current year.

GAGE.--Water-stage recorder and concrete control. Datum of gage is 97.94 ft above mean sea level (Santa Barbara County bench mark).

EXTREMES.--Current year: Maximum discharge, 450 cfs Dec. 27 (gage height, 5.02 ft), from rating curve extended as explained below; no flow many days.
Period of record: Maximum discharge, 450 cfs Dec. 27, 1971 (gage height, 5.02 ft), from rating curve extended above 2.3 cfs on basis of slope-area measurement of maximum flow; no flow many days in each year. Flood of Jan. 25, 1969, reached a stage of 5.83 ft, from floodmark (discharge, 680 cfs).

REMARKS.--Records fair. No regulation or diversion above station.

DISCHARGE, IN CUBIC FEET PER SECOND, WATER YEAR OCTOBER 1971 TO SEPTEMBER 1972

DAY	OCT	NOV	DEC	JAN	FEB	MAR	APR	MAY	JUN	JUL	AUG	SEP
1	0	.01	0	.56	.09	.04	.03	.05	.01	.01	.11	
2	0	.02	.06	.42	.07	.10	0	.07	.04	0	.07	
3	0	0	0	.26	.07	.08	.03	.08	.02	.02	0	
4	0	0	0	.15	.05	.19	.10	.08	.02	.01	0	
5	0	0	0	.09	.15	.16	.09	.09	0	0	0	
6	0	0	0	.09	.05	.07	.07	.07	.01	0	0	
7	0	.01	0	.09	.04	.12	.07	.04	.02	0	0	
8	0	.02	0	.03	.08	.13	.13	.08	.02	.02	0	
9	0	.02	0	.02	.05	.10	.14	.09	.02	.01	0	
10	0	.02	0	.01	.02	0	.14	.06	.02	0	0	
11	0	.10	0	0	.03	0	.26	.04	0	0	0	
12	0	.06	.02	0	0	0	0	.03	0	.07	0	
13	0	.03	0	0	.02	.06	.01	.02	.01	.08	0	
14	0	.02	0	0	.01	.11	.04	.02	.10	.05	0	
15	0	.02	0	0	.03	.10	.06	.04	.10	.11	0	
16	0	.03	0	0	.01	.12	.07	.04	.06	.05	0	
17	0	0	0	0	.01	.14	.06	.05	.10	.03	0	
18	0	.01	0	0	.04	.11	.05	.07	.04	.06	0	
19	0	.01	0	0	.01	.12	.05	.09	.06	.05	0	
20	0	0	0	0	.01	.13	.07	.08	.01	.04	0	
21	0	.01	.06	0	.02	.13	.10	.09	.02	.04	0	
22	0	.01	3.3	0	.05	.10	.09	.09	.02	.03	0	
23	0	.03	.10	.03	0	.07	.07	.07	.02	.02	0	
24	0	.03	.37	.05	0	.08	.09	.03	.01	.03	0	
25	0	0	2.3	.01	.03	.07	.10	.02	0	.03	0	
26	.02	0	2.7	.08	.12	.08	.09	.03	.01	.06	0	
27	.03	0	27	.17	.11	.12	.06	.04	.01	.02	0	
28	.01	.01	2.2	.06	.10	.07	.09	.01	.03	.06	0	
29	.01	.03	1.2	.04	.09	.06	.07	.02	.05	.10	0	
30	.02	0	1.0	.07	------	.07	.05	.03	.03	.11	0	
31	.03	------	.78	.07	------	.08	------	.03	------	.12	0	------
TOTAL	.12	.50	41.09	2.32	1.36	2.81	2.28	1.65	.86	1.23	.18	0
MEAN	.004	.017	1.33	.075	.047	.091	.076	.053	.029	.040	.006	0
MAX	.03	.10	27	.56	.15	.19	.26	.09	.10	.12	.11	0
MIN	0	0	0	0	0	0	0	.01	0	0	0	0
AC-FT	.2	1.0	82	4.6	2.7	5.6	4.5	3.3	1.7	2.4	.4	0

CAL YR 1971 TOTAL 106.58 MEAN .29 MAX 27 MIN 0 AC-FT 211
WTR YR 1972 TOTAL 54.40 MEAN .15 MAX 27 MIN 0 AC-FT 108

PEAK DISCHARGE (BASE, 50 CFS).--Dec. 27 (0200) 450 cfs (5.02 ft).

11135000 SANTA YNEZ RIVER AT PINE CANYON, NEAR LOMPOC, CALIF.

LOCATION.--Lat 34°40'20", long 120°29'30", in Lompoc Grant, Santa Barbara County, on right bank at Floradale Avenue bridge, 2.1 miles upstream from Santa Lucia Creek, and 3 miles northwest of Lompoc.

DRAINAGE AREA.--844 sq mi.

PERIOD OF RECORD.--May 1941 to October 1946, August 1964 to current year. Monthly discharge only for some periods, published in WSP 1315-B.

GAGE.--Water-stage recorder. Datum of gage is 40.78 ft above mean sea level. Prior to Aug. 24, 1964, at different datum. Aug. 24, 1964, to Aug. 20, 1970, at datum 0.91 ft lower.

EXTREMES.--Current year: Maximum discharge, 152 cfs Dec. 27 (gage height, 4.43 ft); no flow many days. Period of record: Maximum discharge, 78,000 cfs (estimated) Jan. 25, 1969 (gage height, 24.91 ft, present datum, from floodmark); no flow at times in some years.

REMARKS.--Records fair. Flow regulated by Jameson Lake, Gibraltar Reservoir, and Lake Cachuma (see sta 11121000, 11122000, 11125500). Water diverted out of basin from Jameson Lake, Gibraltar Reservoir, and Lake Cachuma to cities of Montecito, Santa Barbara, and Goleta for municipal supply. Water pumped from wells along bank for irrigation in valley upstream.

DISCHARGE, IN CUBIC FEET PER SECOND, WATER YEAR OCTOBER 1971 TO SEPTEMBER 1972

DAY	OCT	NOV	DEC	JAN	FEB	MAR	APR	MAY	JUN	JUL	AUG	SEP
1	.55	.46	2.1	3.9	2.2	2.6	1.3	.63	.36	.15	.21	
2	.57	.66	6.9	3.0	1.9	2.7	1.1	.75	.34	.10	.12	
3	.38	.48	6.7	3.2	2.0	2.7	1.0	.71	.32	.07	.03	
4	.35	.58	2.3	3.3	2.2	2.7	1.1	.63	.28	.21	.10	
5	.37	.87	1.5	12	3.0	2.6	1.1	.62	.36	.11	.13	
6	.30	.81	1.5	19	2.1	2.8	1.2	.65	.38	.07	.01	
7	.40	.79	1.4	14	2.1	3.1	1.1	.59	.49	0	0	
8	.40	1.1	.87	12	2.2	3.0	1.4	.52	.52	0	0	
9	.45	1.4	1.1	13	2.0	2.6	1.5	.68	.55	0	0	
10	.39	1.4	1.3	20	2.1	2.5	1.3	.56	.40	0	0	
11	.38	1.4	1.5	24	2.1	2.4	1.9	.50	.31	.09	0	
12	.48	4.9	1.9	17	2.1	2.6	1.6	.33	.14	.14	0	
13	.44	3.4	10	7.7	2.0	2.4	1.5	.25	.10	.11	0	
14	.41	1.7	2.4	3.9	1.9	2.4	1.3	.19	.10	.14	0	
15	.43	1.7	1.9	3.2	2.1	2.3	1.3	.22	.07	.10	0	
16	.52	2.2	1.7	2.9	2.0	2.4	1.0	.29	.15	0	0	
17	.62	2.0	1.7	2.6	2.1	2.4	1.0	.29	.08	0	0	
18	.50	2.0	1.6	2.6	2.2	2.3	1.3	.40	.12	0	0	
19	.46	1.4	1.5	2.4	2.1	2.3	1.1	.39	.12	0	0	
20	.51	1.5	1.5	2.3	2.0	2.2	1.2	.36	.13	.05	0	
21	.62	1.3	1.9	2.4	1.8	2.3	1.1	.36	.11	.03	0	
22	.51	1.0	39	2.6	3.4	1.8	1.1	.35	.06	0	0	
23	.62	1.6	6.2	2.4	2.5	1.7	.91	.43	.06	0	0	
24	.50	1.5	4.3	2.3	2.5	2.0	1.1	.38	.15	0	0	
25	.36	1.6	25	2.4	2.5	2.1	1.2	.41	.05	.02	0	
26	.56	1.0	15	3.1	2.3	2.0	.93	.36	.01	.03	0	
27	.92	1.2	64	3.5	2.3	1.6	.87	.36	.08	.01	0	
28	.64	.98	28	2.6	2.5	1.3	.89	.28	.09	.01	0	
29	.50	3.1	12	2.3	2.9	1.4	.94	.16	.09	.09	0	
30	.53	3.0	6.7	2.3	------	1.5	.69	.28	.13	.20	0	
31	.67	------	4.3	2.1	------	1.4	------	.37	------	.17	0	------
TOTAL	15.34	47.03	257.77	200.0	65.1	70.1	35.03	13.30	6.15	1.90	.60	0
MEAN	.49	1.57	8.32	6.45	2.24	2.26	1.17	.43	.21	.061	.019	0
MAX	.92	4.9	64	24	3.4	3.1	1.9	.75	.55	.21	.21	0
MIN	.30	.46	.87	2.1	1.8	1.3	.69	.16	.01	0	0	0
AC-FT	30	93	511	397	129	139	69	26	12	3.8	1.2	0

CAL YR 1971 TOTAL 1,661.40 MEAN 4.55 MAX 64 MIN .01 AC-FT 3,300
WTR YR 1972 TOTAL 712.32 MEAN 1.95 MAX 64 MIN 0 AC-FT 1,410

11135200 RODEO-SAN PASQUAL CREEK NEAR LOMPOC, CALIF.

LOCATION.--Lat 34°38'42", long 120°30'57", in Lompoc Grant, Santa Barbara County, on left bank 0.1 mile east of Dewolf Avenue and at Highway 246, 3.3 miles west of Lompoc.

DRAINAGE AREA.--7.80 sq mi.

PERIOD OF RECORD.--October 1970 to September 1972 (discontinued).

GAGE.--Water-stage recorder. Altitude of gage is 55 ft (from topographic map).

EXTREMES.--Current year: Maximum discharge, 0.50 cfs Dec. 27 (gage height, 1.12 ft); no flow most of year.
Period of record: Maximum discharge, 9.0 cfs Dec. 21, 1970 (gage height, 1.31 ft); no flow most of each year.

REMARKS.--Records fair. No regulation or diversion.

COOPERATION.--Gage-height records furnished by Santa Barbara County Flood Control and Water Conservation District.

DISCHARGE, IN CUBIC FEET PER SECOND, WATER YEAR OCTOBER 1971 TO SEPTEMBER 1972

DAY	OCT	NOV	DEC	JAN	FEB	MAR	APR	MAY	JUN	JUL	AUG	SEP
1			0	.09								
2			0	.09								
3			0	.09								
4			0	.09								
5			0	.09								
6			0	.09								
7			0	.09								
8			0	.09								
9			0	.09								
10			0	.09								
11			0	.09								
12			0	.09								
13			0	.09								
14			0	.04								
15			0	0								
16			0	0								
17			0	0								
18			0	0								
19			0	0								
20			0	0								
21			0	0								
22			0	0								
23			0	0								
24			0	0								
25			0	0								
26			0	0								
27			.14	0								
28			.10	0								
29			.09	0								
30			.09	0	------							
31		------	.09	0	------		------		------			------
TOTAL	0	0	.51	1.21	0	0	0	0	0	0	0	0
MEAN	0	0	.017	.039	0	0	0	0	0	0	0	0
MAX	0	0	.14	.09	0	0	0	0	0	0	0	0
MIN	0	0	0	0	0	0	0	0	0	0	0	0
AC-FT	0	0	1.0	2.4	0	0	0	0	0	0	0	0

CAL YR 1971 TOTAL 0.69 MEAN .0020 MAX .14 MIN 0 AC-FT 1.4
WTR YR 1972 TOTAL 1.72 MEAN .0050 MAX .14 MIN 0 AC-FT 3.4

NOTE.--No gage-height record June 7 to Sept. 30.

11135800 SAN ANTONIO CREEK AT LOS ALAMOS, CALIF.

LOCATION.--Lat 34°44'36", long 120°16'12", in Los Alamos Grant, Santa Barbara County, on left bank 100 ft upstream from northbound lane of Highway 101 at Los Alamos.

DRAINAGE AREA.--34.9 sq mi.

PERIOD OF RECORD.--October 1970 to current year.

GAGE.--Water-stage recorder. Altitude of gage is 580 ft (from topographic map).

EXTREMES.--Current year: Maximum discharge, 46 cfs Dec. 27 (gage height, 2.16 ft), from rating curve extended as explained below; no flow for most of year.
Period of record: Maximum discharge, 46 cfs Dec. 27, 1971 (gage height, 2.16 ft), on basis of slope-area measurement of maximum flow; no flow for most of each year.

REMARKS.--Records good. No regulation above station. Pumping for irrigation of about 1,000 acres above station.

DISCHARGE, IN CUBIC FEET PER SECOND, WATER YEAR OCTOBER 1971 TO SEPTEMBER 1972

DAY	OCT	NOV	DEC	JAN	FEB	MAR	APR	MAY	JUN	JUL	AUG	SEP
1			0	0	.01							
2			0	0	.01							
3			0	0	.01							
4			0	0	.05							
5			0	0	.20							
6			0	0	.18							
7			0	0	.06							
8			0	0	.05							
9			0	0	.04							
10			0	0	.05							
11			0	0	.02							
12			0	0	.05							
13			0	0	.03							
14			0	0	.04							
15			0	0	.04							
16			0	0	.04							
17			0	0	.05							
18			0	0	.05							
19			0	0	.04							
20			0	0	.08							
21			0	0	.08							
22			0	0	.05							
23			0	.02	.03							
24			0	.04	0							
25			0	.08	.02							
26			.10	.07	0							
27			8.0	.09	0							
28			1.1	.11	0							
29			.74	.09	0							
30			.37	0	------							
31		------	0	0	------		------		------			------
TOTAL	0	0	10.31	.50	1.28	0	0	0	0	0	0	0
MEAN	0	0	.33	.016	.044	0	0	0	0	0	0	0
MAX	0	0	8.0	.11	.20	0	0	0	0	0	0	0
MIN	0	0	0	0	0	0	0	0	0	0	0	0
AC-FT	0	0	20	1.0	2.5	0	0	0	0	0	0	0

CAL YR 1971 TOTAL 16.64 MEAN .046 MAX 8.0 MIN 0 AC-FT 33
WTR YR 1972 TOTAL 12.09 MEAN .033 MAX 8.0 MIN 0 AC-FT 24

PEAK DISCHARGE (BASE, 30 CFS).--Dec. 27 (0300) 46 cfs (2.16 ft).

11136100 SAN ANTONIO CREEK NEAR CASMALIA, CALIF.

LOCATION.--Lat 34°46'56", long 120°31'47", in Jesus Maria Grant, Santa Barbara County, on Vandenberg Military Reservation on downstream side of left center pile bent of San Antonio Road bridge, 0.7 mile east of junction of San Antonio Road and Lompoc-Casmalia Road, and 3.8 miles south of Casmalia.

DRAINAGE AREA.--135 sq mi.

PERIOD OF RECORD.--October 1955 to current year.

GAGE.--Water-stage recorder. Concrete control since August 1970. Altitude of gage is 160 ft (from topographic map). Prior to June 27, 1958, at datum 2.00 ft higher.

AVERAGE DISCHARGE.--17 years, 5.36 cfs (3,880 acre-ft per year); median of yearly mean discharges, 2.9 cfs (2,100 acre-ft per year).

EXTREMES.--Current year: Maximum discharge, 55 cfs Dec. 27 (gage height, 5.37 ft); minimum daily, 0.25 cfs June 12, July 9.
Period of record: Maximum discharge, 2,300 cfs Feb. 25, 1969 (gage height, 11.79 ft); minimum daily, 0.10 cfs June 19, 20, 1957.

REMARKS.--Records good. No regulation above station. Flow affected by pumping from wells along stream for irrigation above station.

DISCHARGE, IN CUBIC FEET PER SECOND, WATER YEAR OCTOBER 1971 TO SEPTEMBER 1972

DAY	OCT	NOV	DEC	JAN	FEB	MAR	APR	MAY	JUN	JUL	AUG	SEP
1	.30	.34	.83	2.1	1.6	2.0	.97	.44	.39	.35	.28	.47
2	.29	.34	.97	2.0	1.6	2.1	.94	.51	.40	.35	.28	.70
3	.28	.34	1.3	1.9	1.6	1.8	.97	.51	.38	.32	.28	.54
4	.28	.34	1.2	1.8	1.6	1.7	.94	.52	.39	.28	.28	.47
5	.28	.42	.95	1.7	2.3	1.6	.91	.59	.39	.30	.28	.54
6	.28	.38	.92	1.6	2.5	1.6	.91	.60	.37	.29	.28	1.4
7	.27	.44	.86	1.5	2.2	1.6	.90	.60	.38	.27	.28	3.9
8	.28	.44	.88	1.5	2.1	1.6	.86	.60	.45	.27	.34	4.4
9	.29	.36	.87	1.4	2.0	1.6	.82	.54	.47	.25	.34	4.2
10	.28	.38	.94	1.5	2.0	1.6	.81	.49	.34	.27	.40	4.4
11	.28	.46	.91	1.4	1.9	1.5	.83	.52	.31	.28	.47	4.4
12	.27	.72	.97	1.4	1.8	1.5	1.1	.49	.25	.28	.49	4.4
13	.26	.76	1.7	1.7	1.7	1.4	1.1	.45	.27	.28	.53	4.4
14	.28	.68	1.5	1.7	1.7	1.4	.99	.44	.29	.28	.54	4.4
15	.29	.62	1.2	1.5	1.7	1.3	.90	.42	.31	.28	.57	4.4
16	.32	.60	1.0	1.5	1.7	1.3	.91	.40	.35	.28	.65	4.6
17	.33	.55	1.0	1.5	1.7	1.3	.88	.50	.33	.28	.70	4.6
18	.27	.56	1.0	1.5	1.8	1.3	.87	.52	.36	.29	.65	4.6
19	.28	.55	1.0	1.5	1.8	1.3	.83	.53	.39	.30	.54	4.6
20	.27	.54	1.0	1.5	1.7	1.2	.81	.52	.39	.30	.53	1.4
21	.27	.54	1.0	1.6	1.7	1.2	.82	.48	.40	.30	.47	.40
22	.27	.65	2.1	1.6	2.1	1.2	.83	.47	.40	.30	.48	.40
23	.29	.65	3.4	1.6	2.3	1.1	.83	.48	.41	.30	.47	.40
24	.28	.70	2.7	1.6	2.1	1.1	.71	.47	.40	.30	.47	.40
25	.32	.69	3.1	1.6	2.2	1.0	.66	.47	.40	.30	.47	.40
26	.33	.70	3.3	1.7	1.8	1.1	.61	.46	.38	.29	.47	.40
27	.32	.70	19	1.7	1.8	.93	.58	.44	.39	.29	.47	.40
28	.32	.77	12	1.7	1.8	.92	.49	.41	.39	.29	.47	.40
29	.29	.85	4.2	1.7	1.9	.92	.51	.41	.39	.28	.47	.40
30	.33	.87	2.7	1.7	------	.99	.48	.39	.36	.28	.47	.34
31	.34	------	2.3	1.6	------	.97	------	.39	------	.28	.47	------
TOTAL	9.04	16.94	76.80	50.3	54.7	42.13	24.77	15.06	11.13	9.01	13.89	66.76
MEAN	.29	.56	2.48	1.62	1.89	1.36	.83	.49	.37	.29	.45	2.23
MAX	.34	.87	19	2.1	2.5	2.1	1.1	.60	.47	.35	.70	4.6
MIN	.26	.34	.83	1.4	1.6	.92	.48	.39	.25	.25	.28	.34
AC-FT	18	34	152	100	108	84	49	30	22	18	28	132

CAL YR 1971 TOTAL 389.12 MEAN 1.07 MAX 19 MIN .26 AC-FT 772
WTR YR 1972 TOTAL 390.53 MEAN 1.07 MAX 19 MIN .25 AC-FT 775

PEAK DISCHARGE (BASE, 50 CFS).--Dec. 27 (1730) 55 cfs (5.37 ft).

11136650 ALISO CANYON CREEK NEAR NEW CUYAMA, CALIF.

LOCATION.--Lat 34°59'00", long 119°46'30", in Cuyama Grant, Santa Barbara County, at culvert on State Highway 166, 5.8 miles northwest of New Cuyama.

DRAINAGE AREA.--16.1 sq mi.

PERIOD OF RECORD.--Water years 1960-63 (annual maximum), October 1963 to current year.

GAGE.--Water-stage recorder with rain-gage attachment. Arch-culvert control since July 25, 1963. Altitude of gage is 1,880 ft (from topographic map). Sept. 30, 1959, to July 24, 1963, crest-stage gage at same site at different datum.

AVERAGE DISCHARGE.--9 years, 0.26 cfs (185 acre-ft per year).

EXTREMES.--Current year: Maximum discharge, 33 cfs Aug. 27 (gage height, 3.33 ft), from rating curve based on computation of flow through culvert at gage heights 4.20 and 6.48 ft; no flow except Aug. 27, 28.
Period of record: Maximum discharge, 552 cfs Feb. 24, 1969 (gage height, 10.66 ft), on basis of computation of flow through culvert; no flow most of each year.

REMARKS.--Records good. No regulation or diversion above station.

DISCHARGE, IN CUBIC FEET PER SECOND, WATER YEAR OCTOBER 1971 TO SEPTEMBER 1972

DAY	OCT	NOV	DEC	JAN	FEB	MAR	APR	MAY	JUN	JUL	AUG	SEP
1											0	
2											0	
3											0	
4											0	
5											0	
6											0	
7											0	
8											0	
9											0	
10											0	
11											0	
12											0	
13											0	
14											0	
15											0	
16											0	
17											0	
18											0	
19											0	
20											0	
21											0	
22											0	
23											0	
24											0	
25											0	
26											0	
27											5.3	
28											1.3	
29											0	
30					------						0	
31		------			------		------		------		0	------
TOTAL	0	0	0	0	0	0	0	0	0	0	6.6	0
MEAN	0	0	0	0	0	0	0	0	0	0	.21	0
MAX	0	0	0	0	0	0	0	0	0	0	5.3	0
MIN	0	0	0	0	0	0	0	0	0	0	0	0
AC-FT	0	0	0	0	0	0	0	0	0	0	13	0
(a)	.4	0	2.2	0	.1	0	0	0	.2	0	.8	0

CAL YR 1971 TOTAL 6.60 MEAN .018 MAX 6.6 MIN 0 AC-FT 13
WTR YR 1972 TOTAL 6.60 MEAN .018 MAX 5.3 MIN 0 AC-FT 13

a Precipitation, in inches.

11136800 CUYAMA RIVER BELOW BUCKHORN CANYON, NEAR SANTA MARIA, CALIF.

LOCATION.--Lat 35°01'19", long 120°13'39", in SW¼ sec.14, T.11 N., R.32 W., San Luis Obispo-Santa Barbara County line, on downstream side of second pier from right abutment of bridge on State Highway 166, 0.7 mile downstream from Buckhorn Canyon, and 13 miles northeast of Santa Maria.

DRAINAGE AREA.--886 sq mi.

PERIOD OF RECORD.--October 1903 to December 1905 (published as Santa Maria River near Santa Maria), October 1959 to current year. Monthly discharge only for October 1903 and July 1904 and yearly estimate for water year 1941 (incomplete), published in WSP 1315-B.

GAGE.--Water-stage recorder. Altitude of gage is 760 ft (from topographic map). Prior to October 1959, nonrecording gage at different site and datum.

AVERAGE DISCHARGE.--15 years, 23.7 cfs (17,170 acre-ft per year); median of yearly mean discharges, 2.8 cfs (2,000 acre-ft per year). Median of yearly mean discharges for 1971 published in error. Correct median is 3.3 cfs (2,400 acre-ft per year).

EXTREMES.--Current year: Maximum discharge, 210 cfs Dec. 26 (gage height, 5.43 ft); no flow for several months. Period of record: Maximum discharge, 17,800 cfs Feb. 25, 1969 (gage height, 13.70 ft), from rating curve extended above 4,900 cfs on basis of slope-area measurement at gage height 10.85 ft; no flow at times in most years.

REMARKS.--Records good. No regulation above station. Pumping from wells along stream for irrigation in Upper Cuyama Valley.

DISCHARGE, IN CUBIC FEET PER SECOND, WATER YEAR OCTOBER 1971 TO SEPTEMBER 1972

DAY	OCT	NOV	DEC	JAN	FEB	MAR	APR	MAY	JUN	JUL	AUG	SEP
1	.14	.08	0	3.9	.31	.24	.11					
2	.14	.08	.01	3.0	.25	.24	.10					
3	.14	.06	0	1.8	.25	.23	.10					
4	.11	0	0	1.2	.27	.22	.10					
5	.09	0	0	1.8	.38	.18	.12					
6	.07	0	0	.67	.35	.18	.10					
7	.03	0	0	.97	.28	.19	.10					
8	.03	0	0	.97	.30	.20	.09					
9	.01	0	0	.87	.28	.20	.08					
10	.01	0	0	.78	.28	.17	.09					
11	0	0	0	.72	.28	.17	.16					
12	0	.02	0	.61	.28	.18	.14					
13	.03	0	0	.59	.29	.17	.13					
14	.06	0	0	.58	.27	.17	.10					
15	.07	0	0	.56	.23	.14	.08					
16	.10	0	0	.56	.24	.13	.08					
17	.10	0	0	.48	.28	.13	.08					
18	.10	0	0	.49	.23	.14	.08					
19	.10	0	0	.47	.23	.13	.08					
20	.09	0	0	.47	.25	.14	.06					
21	.08	0	0	.48	.25	.12	.05					
22	.08	0	.04	.47	.26	.12	.04					
23	.09	0	.01	.46	.25	.12	.03					
24	.09	0	.05	.40	.28	.12	.03					
25	.07	0	33	.35	.28	.11	.03					
26	.07	0	71	.32	.27	.09	.02					
27	.08	0	74	.39	.27	.11	0					
28	.08	0	31	.43	.23	.11	0					
29	.08	0	16	.34	.23	.11	0					
30	.09	0	8.3	.33	------	.11	0					
31	.08	------	5.5	.32	------	.11	------		------			------
TOTAL	2.31	.24	238.91	25.72	7.85	4.78	2.18	0	0	0	0	0
MEAN	.075	.008	7.71	.83	.27	.15	.073	0	0	0	0	0
MAX	.14	.08	74	3.9	.38	.24	.16	0	0	0	0	0
MIN	0	0	0	.32	.23	.09	0	0	0	0	0	0
AC-FT	4.6	.5	474	51	16	9.5	4.3	0	0	0	0	0

CAL YR 1971 TOTAL 500.19 MEAN 1.37 MAX 74 MIN 0 AC-FT 992
WTR YR 1972 TOTAL 281.99 MEAN .77 MAX 74 MIN 0 AC-FT 559

PEAK DISCHARGE (BASE, 200 CFS).--Dec. 26 (1715) 210 cfs (5.43 ft).

11137400 ALAMO CREEK NEAR NIPOMO, CALIF.

LOCATION.--Lat 35°02'55", long 120°18'05", in Huasna Grant, San Luis Obispo County, on right bank 3.2 miles upstream from mouth, and 10 miles east of Nipomo.

DRAINAGE AREA.--83.3 sq mi.

PERIOD OF RECORD.--March 1959 to current year.

GAGE.--Water-stage recorder. Altitude of gage is 650 ft (from topographic map). Prior to Oct. 1, 1966, at datum 2.00 ft higher.

AVERAGE DISCHARGE.--13 years, 8.60 cfs (6,230 acre-ft per year); median of yearly mean discharges, 0.0003 cfs (0.2 acre-ft per year).

EXTREMES.--Current year: No flow during year.
Period of record: Maximum discharge, 9,020 cfs Jan. 25, 1969 (gage height, 10.51 ft), from rating curve extended above 3,100 cfs on basis of slope-area measurement at gage height 10.30 ft; no flow for all or part of each year.

REMARKS.--No flow since Jan. 14, 1971. No regulation or diversion above station. Figures for the calendar year 1971 are as follows: Maximum daily, 2.3 cfs; minimum, zero; mean, 0.009 cfs; runoff, 6.2 acre-ft.

11137900 HUASNA RIVER NEAR ARROYO GRANDE, CALIF.

LOCATION.--Lat 35°04'40", long 120°22'15", in Huasna Grant, San Luis Obispo County, on right bank 300 ft downstream from Huasna Creek, and 12 miles southeast of Arroyo Grande.

DRAINAGE AREA.--103 sq mi.

PERIOD OF RECORD.--June 1959 to current year.

GAGE.--Water-stage recorder. Altitude of gage is 640 ft (from topographic map).

AVERAGE DISCHARGE.--13 years, 19.7 cfs (14,270 acre-ft per year); median of yearly mean discharges, 3.0 cfs (2,200 acre-ft per year).

EXTREMES.--Current year: Maximum discharge, 0.96 cfs Apr. 24 (gage height, 3.33 ft); no flow for several months. Period of record: Maximum discharge, 21,000 cfs Jan. 25, 1969 (gage height, 15.90 ft), from rating curve extended above 1,300 cfs on basis of slope-area measurement of maximum flow; no flow for many days in most years.

REMARKS.--Records good. No regulation above station. Some diversions by pumping for irrigation above station.

DISCHARGE, IN CUBIC FEET PER SECOND, WATER YEAR OCTOBER 1971 TO SEPTEMBER 1972

DAY	OCT	NOV	DEC	JAN	FEB	MAR	APR	MAY	JUN	JUL	AUG	SEP
1	.16	.16	.20	.20	.28	.21	.20	.02	0	0		
2	.16	.16	.20	.20	.28	.20	.16	.01	.03	0		
3	.16	.16	.20	.20	.28	.22	.12	.15	.03	0		
4	.16	.16	.20	.20	.25	.18	.12	.43	0	0		
5	.16	.16	.20	.20	.40	.20	.09	.15	0	0		
6	.16	.16	.20	.20	.29	.23	.06	.06	0	0		
7	.16	.16	.20	.20	.22	.21	.05	.04	0	0		
8	.16	.16	.20	.20	.19	.25	.04	.03	0	0		
9	.16	.16	.20	.20	.20	.27	.03	.02	0	0		
10	.16	.16	.20	.20	.20	.24	.03	.01	0	0		
11	.16	.16	.20	.20	.24	.17	.06	0	0	0		
12	.16	.16	.20	.24	.20	.17	.09	0	.01	0		
13	.16	.16	.20	.24	.23	.14	.24	0	.01	0		
14	.16	.16	.20	.24	.24	.12	.20	0	0	0		
15	.16	.20	.20	.24	.23	.09	.16	0	0	0		
16	.16	.20	.20	.24	.25	.10	.16	.01	0	0		
17	.16	.20	.20	.24	.19	.09	.20	.03	0	0		
18	.16	.20	.20	.24	.22	.09	.24	.04	0	0		
19	.16	.20	.20	.24	.24	.07	.16	.05	0	0		
20	.16	.20	.20	.24	.24	.05	.20	.05	0	0		
21	.16	.20	.20	.24	.20	.04	.28	.05	0	0		
22	.16	.20	.20	.24	.27	.04	.28	.05	0	0		
23	.16	.20	.20	.24	.25	.04	.28	.06	0	0		
24	.16	.20	.20	.24	.24	.04	.39	.05	0	0		
25	.16	.20	.20	.24	.23	.04	.45	.05	0	.01		
26	.16	.20	.20	.24	.22	.05	.12	.05	0	0		
27	.20	.20	.20	.32	.19	.06	.05	.05	0	0		
28	.16	.20	.20	.31	.20	.11	.04	.04	0	0		
29	.16	.20	.20	.26	.21	.16	.03	.03	0	0		
30	.16	.20	.20	.28	------	.16	.02	.02	0	0		
31	.16	------	.20	.28	------	.20	------	0	------	0		------
TOTAL	5.00	5.44	6.20	7.25	6.88	4.24	4.55	1.55	.08	.01	0	0
MEAN	.16	.18	.20	.23	.24	.14	.15	.050	.003	.0003	0	0
MAX	.20	.20	.20	.32	.40	.27	.45	.43	.03	.01	0	0
MIN	.16	.16	.20	.20	.19	.04	.02	0	0	0	0	0
AC-FT	9.9	11	12	14	14	8.4	9.0	3.1	.2	.02	0	0

CAL YR 1971 TOTAL 1,001.70 MEAN 2.74 MAX 132 MIN .10 AC-FT 1,990
WTR YR 1972 TOTAL 41.20 MEAN .11 MAX .4 MIN 0 AC-FT 82

PEAK DISCHARGE (BASE, 40 CFS).--No peak above base.

11138100 CUYAMA RIVER BELOW TWITCHELL DAM, CALIF.

LOCATION.--Lat 34°56'40", long 120°17'30", in Suey Grant, Santa Barbara County, on left bank 3.5 miles upstream from mouth, 4 miles northeast of Garey, and 4.4 miles downstream from Twitchell Dam.

DRAINAGE AREA.--1,132 sq mi.

PERIOD OF RECORD.--October 1958 to current year.

GAGE.--Water-stage recorder. Datum of gage is 401.94 ft above mean sea level (Bureau of Reclamation bench mark).

EXTREMES.--Current year: Maximum discharge, 0.35 cfs Dec. 27 (gage height, 2.02 ft); no flow most of year. Period of record: Maximum discharge, 6,920 cfs Feb. 25, 1969 (gage height, 10.58 ft); no flow at times in each year.

REMARKS.--Records good. Flow regulated since February 1959 by Twitchell Reservoir (capacity, 240,000 acre-ft). Some pumping from wells along stream for irrigation above station.

DISCHARGE, IN CUBIC FEET PER SECOND, WATER YEAR OCTOBER 1971 TO SEPTEMBER 1972

DAY	OCT	NOV	DEC	JAN	FEB	MAR	APR	MAY	JUN	JUL	AUG	SEP
1			0									
2			0									
3			0									
4			0									
5			0									
6			0									
7			0									
8			0									
9			0									
10			0									
11			0									
12			0									
13			0									
14			0									
15			0									
16			0									
17			0									
18			0									
19			0									
20			0									
21			0									
22			0									
23			0									
24			0									
25			0									
26			0									
27			.09									
28			.02									
29			0									
30			0		------							
31		------	0		------		------		------			------
TOTAL	0	0	.11	0	0	0	0	0	0	0	0	0
MEAN	0	0	.004	0	0	0	0	0	0	0	0	0
MAX	0	0	.09	0	0	0	0	0	0	0	0	0
MIN	0	0	0	0	0	0	0	0	0	0	0	0
AC-FT	0	0	.2	0	0	0	0	0	0	0	0	0

CAL YR 1971 TOTAL 2,213.67 MEAN 6.06 MAX 55 MIN 0 AC-FT 4,390
WTR YR 1972 TOTAL 0.11 MEAN .0003 MAX .09 MIN 0 AC-FT .2

11138500 SISQUOC RIVER NEAR SISQUOC, CALIF.

LOCATION.--Lat 34°50'23", long 120°10'02", in Sisquoc Grant, Santa Barbara County, on left bank 2.6 miles upstream from La Brea Creek, and 7 miles east of Sisquoc.

DRAINAGE AREA.--281 sq mi.

PERIOD OF RECORD.--October 1943 to current year. October 1929 to September 1933, at site 0.2 mile downstream; low-flow records not equivalent owing to diversion immediately upstream. Monthly discharge only for some periods, published in WSP 1315-B.

GAGE.--Water-stage recorder. Datum of gage is 624.30 ft above mean sea level (Corps of Engineers bench mark). See WSP 1735 for history of changes prior to Aug. 24, 1951.

AVERAGE DISCHARGE.--29 years, 41.3 cfs (29,920 acre-ft per year); median of yearly mean discharges, 16 cfs (11,600 acre-ft per year).

EXTREMES.--Current year: Maximum discharge, 966 cfs Dec. 25 (gage height, 4.18 ft); minimum daily, 0.40 cfs Aug. 22 to Sept. 5.

Period of record: Maximum discharge, 23,200 cfs Dec. 6, 1966 (gage height, 15.75 ft), from rating curve extended above 1,700 cfs on basis of slope-area measurements at gage heights 10.08 and 15.75 ft; no flow Nov. 11-18, 1967.

Flood of Mar. 2, 1938, 11,000 cfs (gage height, 8.1 ft, from high-water mark in gage well, at site in use 1929-33), from rating curve extended above 2,800 cfs.

REMARKS.--Records fair. No regulation or diversion above station.

DISCHARGE, IN CUBIC FEET PER SECOND, WATER YEAR OCTOBER 1971 TO SEPTEMBER 1972

DAY	OCT	NOV	DEC	JAN	FEB	MAR	APR	MAY	JUN	JUL	AUG	SEP
1	1.5	1.3	1.4	29	11	9.6	4.4	2.6	1.9	1.8	.90	.40
2	1.4	1.3	2.8	24	11	9.1	4.2	2.6	1.9	1.8	.90	.40
3	1.4	1.3	5.5	21	11	8.7	4.0	2.6	1.9	1.8	.80	.40
4	1.3	1.3	4.2	20	11	8.3	3.9	2.5	1.9	1.7	.80	.40
5	1.2	1.3	1.8	18	12	8.2	3.9	2.5	1.9	1.7	.80	.40
6	1.3	1.3	1.4	17	12	8.4	3.9	2.5	1.9	1.7	.70	.45
7	1.4	1.3	1.4	16	12	8.8	3.6	2.4	1.9	1.7	.70	.45
8	1.2	1.3	1.5	15	12	8.5	3.6	2.4	1.9	1.7	.70	.45
9	1.1	1.3	1.2	15	12	8.3	3.5	2.4	1.9	1.6	.60	.45
10	1.2	1.3	1.1	14	12	8.1	3.4	2.3	1.9	1.6	.60	.45
11	1.2	1.4	1.1	13	12	7.6	4.1	2.3	1.9	1.6	.60	.45
12	1.2	1.5	1.4	13	12	7.6	4.0	2.3	1.9	1.5	.50	.45
13	1.1	1.5	2.9	12	12	7.1	3.7	2.3	1.9	1.5	.50	.45
14	1.3	1.5	2.0	12	12	6.7	3.7	2.2	1.9	1.5	.50	.45
15	1.3	1.5	1.7	12	12	6.3	3.6	2.2	1.9	1.4	.50	.45
16	1.7	1.5	1.6	13	12	6.0	3.5	2.2	1.8	1.4	.50	.50
17	1.6	1.5	1.6	13	12	5.7	3.5	2.1	1.8	1.4	.48	.50
18	1.4	1.5	1.6	13	12	5.5	3.2	2.1	1.8	1.4	.48	.55
19	1.3	1.5	1.6	12	12	4.9	3.3	2.1	1.8	1.3	.47	.55
20	1.4	1.5	1.6	12	12	4.8	3.1	2.1	1.8	1.3	.45	.55
21	1.4	1.5	10	12	12	4.7	3.0	2.1	1.8	1.3	.42	.60
22	1.3	1.5	50	12	12	4.7	2.9	2.0	1.8	1.2	.40	.60
23	1.3	1.5	353	11	12	5.0	2.9	2.0	1.8	1.2	.40	.60
24	1.5	1.5	393	11	12	4.7	2.9	2.0	1.8	1.1	.40	.65
25	1.5	1.5	314	12	12	4.5	2.9	2.0	1.8	1.1	.40	.70
26	1.4	1.5	353	12	11	4.5	2.8	2.0	1.8	1.1	.40	.70
27	1.4	1.5	437	12	9.9	4.7	2.6	1.9	1.8	1.0	.40	.80
28	1.4	1.5	180	12	9.5	4.7	2.8	1.9	1.8	1.0	.40	.80
29	1.3	1.5	79	12	9.3	4.9	2.8	1.9	1.8	1.0	.40	.85
30	1.3	1.5	49	12	------	4.7	2.6	1.9	1.8	.90	.40	.90
31	1.3	------	36	11	------	4.5	------	1.9	------	.90	.40	------
TOTAL	41.6	42.9	2,293.4	443	335.7	199.8	102.3	68.3	55.5	43.20	16.90	16.35
MEAN	1.34	1.43	74.0	14.3	11.6	6.45	3.41	2.20	1.85	1.39	.55	.55
MAX	1.7	1.5	437	29	12	9.6	4.4	2.6	1.9	1.8	.90	.90
MIN	1.1	1.3	1.1	11	9.3	4.5	2.6	1.9	1.8	.90	.40	.40
AC-FT	83	85	4,550	879	666	396	203	135	110	86	34	32

CAL YR 1971 TOTAL 7,105.60 MEAN 19.5 MAX 437 MIN 1.0 AC-FT 14,090
WTR YR 1972 TOTAL 3,658.95 MEAN 10.0 MAX 437 MIN .40 AC-FT 7,260

PEAK DISCHARGE (BASE, 100 CFS).--Dec. 25 (2345) 966 cfs (4.18 ft); Dec. 27 (1145) 903 cfs (4.09 ft).

11139000 LA BREA CREEK NEAR SISQUOC, CALIF.

LOCATION.--Lat 34°51'10", long 120°11'55", in SE¼ sec.13, T.9 N., R.32 W., Santa Barbara County, on right bank 2,100 ft upstream from mouth, and 5.5 miles east of Sisquoc.

DRAINAGE AREA.--93.6 sq mi.

PERIOD OF RECORD.--October 1943 to current year.

GAGE.--Water-stage recorder. Altitude of gage is 550 ft (from topographic map).

AVERAGE DISCHARGE.--29 years, 6.80 cfs (4,930 acre-ft per year); median of yearly mean discharges, 0.8 cfs (580 acre-ft per year).

EXTREMES.--Current year: No flow during year.
Period of record: Maximum discharge, 11,200 cfs Dec. 6, 1966 (gage height, 8.23 ft), from rating curve extended above 2,000 cfs on basis of slope-area measurement of maximum flow; no flow most of each year.

REMARKS.--No flow since Apr. 21, 1971. Perennial low flow from basin above sinks beneath streambed before reaching station. No regulation or diversion above station. Figures for the calendar year 1971 are as follows: Maximum daily, 10 cfs; minimum, zero; mean, 0.41 cfs; runoff, 296 acre-ft.

11139350 FOXEN CREEK NEAR SISQUOC, CALIF.

LOCATION.--Lat 34°48'58", long 120°13'26", in La Laguna Grant, Santa Barbara County, on left upstream wingwall of culvert on Foxen Canyon Road, 3.0 miles upstream from mouth, and 3.7 miles southeast of Sisquoc.

DRAINAGE AREA.--16.8 sq mi.

PERIOD OF RECORD.--September 1965 to current year.

GAGE.--Water-stage recorder. Altitude of gage is 650 ft (from topographic map).

AVERAGE DISCHARGE.--7 years, 0.47 cfs (341 acre-ft per year).

EXTREMES.--Current year: Maximum discharge, 40 cfs Dec. 27 (gage height, 2.13 ft); minimum daily, 0.01 cfs July 1.
Period of record: Maximum discharge, 271 cfs Feb. 26, 1969 (gage height, 4.91 ft), from rating curve extended above 24 cfs on basis of slope-conveyance measurement of maximum flow; no flow for many days in most years.

REMARKS.--Records good. Small diversion dam for irrigation of about 160 acres above gage. Some pumping from wells along stream above gage.

DISCHARGE, IN CUBIC FEET PER SECOND, WATER YEAR OCTOBER 1971 TO SEPTEMBER 1972

DAY	OCT	NOV	DEC	JAN	FEB	MAR	APR	MAY	JUN	JUL	AUG	SEP
1	.05	.20	.14	.12	.11	.11	.06	.07	.03	.01	.03	.03
2	.05	.18	.17	.11	.11	.11	.06	.07	.03	.02	.03	.04
3	.05	.17	.14	.11	.11	.11	.06	.07	.03	.02	.04	.04
4	.05	.16	.14	.11	.13	.11	.06	.07	.03	.02	.04	.06
5	.04	.17	.11	.11	.15	.11	.07	.07	.03	.02	.04	.06
6	.04	.18	.11	.11	.13	.11	.08	.07	.02	.02	.03	.04
7	.04	.18	.11	.11	.12	.11	.05	.10	.02	.02	.03	.06
8	.04	.18	.14	.11	.13	.11	.06	.09	.02	.02	.03	.06
9	.04	.18	.14	.11	.13	.11	.06	.09	.03	.02	.03	.06
10	.04	.18	.11	.11	.12	.11	.07	.09	.02	.02	.04	.06
11	.05	.20	.11	.11	.09	.11	.09	.08	.02	.03	.04	.06
12	.05	.19	.14	.11	.09	.11	.06	.07	.02	.03	.04	.06
13	.05	.17	.01	.11	.09	.11	.07	.07	.02	.03	.04	.04
14	.07	.15	.11	.10	.10	.11	.07	.07	.02	.03	.04	.06
15	.07	.14	.11	.10	.09	.11	.07	.08	.03	.03	.06	.06
16	.09	.14	.08	.10	.10	.11	.07	.10	.02	.03	.06	.06
17	.08	.14	.11	.10	.11	.11	.06	.09	.03	.03	.06	.06
18	.09	.14	.11	.10	.11	.11	.07	.09	.03	.04	.06	.06
19	.11	.14	.11	.10	.11	.11	.07	.09	.03	.05	.06	.06
20	.11	.14	.11	.10	.11	.11	.07	.07	.03	.07	.06	.06
21	.10	.14	.11	.10	.11	.11	.08	.06	.03	.06	.04	.04
22	.11	.14	.14	.10	.12	.11	.09	.05	.04	.05	.04	.03
23	.12	.14	.11	.10	.10	.11	.07	.05	.05	.05	.04	.04
24	.14	.14	.14	.10	.11	.11	.07	.05	.04	.05	.04	.04
25	.18	.14	.28	.10	.11	.11	.08	.05	.04	.05	.06	.04
26	.16	.14	.11	.11	.11	.11	.08	.06	.03	.04	.04	.04
27	.16	.14	8.1	.11	.11	.12	.08	.04	.03	.04	.04	.04
28	.17	.14	.24	.11	.11	.12	.08	.03	.03	.04	.04	.04
29	.17	.14	.15	.11	.11	.12	.08	.03	.02	.05	.03	.04
30	.20	.14	.14	.11	------	.08	.08	.03	.02	.06	.03	.04
31	.20	------	.13	.11	------	.08	------	.03	------	.06	.03	------
TOTAL	2.92	4.73	12.06	3.30	3.23	3.38	2.12	2.08	.84	1.11	1.29	1.48
MEAN	.094	.16	.39	.11	.11	.11	.071	.067	.028	.036	.042	.049
MAX	.20	.20	8.1	.12	.15	.12	.09	.10	.05	.07	.06	.06
MIN	.04	.14	.08	.10	.09	.08	.05	.03	.02	.01	.03	.03
AC-FT	5.8	9.4	24	6.5	6.4	6.7	4.2	4.1	1.7	2.2	2.6	2.9

CAL YR 1971 TOTAL 60.88 MEAN .17 MAX 8.1 MIN 0 AC-FT 121
WTR YR 1972 TOTAL 38.54 MEAN .11 MAX 8.1 MIN .01 AC-FT 76

PEAK DISCHARGE (BASE, 15 CFS).--Dec. 27 (0145) 40 cfs (2.13 ft).

11139500 TEPUSQUET CREEK NEAR SISQUOC, CALIF.

LOCATION.--Lat 34°52'21", long 120°14'37", in NE¼ sec.9, T.9 N., R.32 W., Santa Barbara County, on downstream wingwall of right bridge abutment, 1.1 miles upstream from mouth, and 3 miles east of Sisquoc.

DRAINAGE AREA.--28.7 sq mi.

PERIOD OF RECORD.--October 1943 to current year.

GAGE.--Water-stage recorder. Concrete control since July 1957. Altitude of gage is 500 ft (from topographic map). Prior to Dec. 9, 1948, at datum 0.9 ft higher.

AVERAGE DISCHARGE.--29 years, 1.47 cfs (1,060 acre-ft per year); median of yearly mean discharges, 0.4 cfs (290 acre-ft per year).

EXTREMES.--Current year: Maximum discharge, 12 cfs Dec. 27 (gage height, 2.57 ft); no flow at times. Period of record: Maximum discharge, 788 cfs Dec. 6, 1966 (gage height, 5.48 ft), from rating curve extended above 220 cfs on basis of computation of maximum flow at contracted opening; no flow at times in some years.

REMARKS.--Records good. No regulation above station. Some diversion by pumping from wells along stream to irrigate about 100 acres above gage.

DISCHARGE, IN CUBIC FEET PER SECOND, WATER YEAR OCTOBER 1971 TO SEPTEMBER 1972

DAY	OCT	NOV	DEC	JAN	FEB	MAR	APR	MAY	JUN	JUL	AUG	SEP
1	.06	.13	.21	.17	.24	.27	.34	.21	.09	.01	.02	0
2	.06	.12	.23	.16	.24	.27	.36	.23	.09	.01	.02	0
3	.07	.11	.20	.15	.24	.27	.37	.24	.09	.01	.03	0
4	.06	.07	.20	.15	.24	.25	.39	.22	.07	.01	.02	0
5	.04	.08	.21	.16	.26	.24	.42	.21	.06	.02	.03	0
6	.07	.11	.21	.16	.28	.25	.45	.20	.05	.02	.02	.01
7	.08	.14	.21	.16	.27	.29	.46	.19	.07	.01	0	.01
8	.09	.14	.19	.17	.27	.29	.46	.19	.08	.01	0	0
9	.08	.16	.19	.17	.24	.31	.40	.20	.08	0	.01	0
10	.09	.16	.19	.15	.25	.30	.44	.18	.07	0	.01	0
11	.09	.15	.19	.16	.25	.29	.42	.19	.07	.01	.01	0
12	.06	.20	.16	.16	.25	.27	.48	.17	.06	.02	.01	0
13	.07	.18	.18	.17	.25	.26	.47	.14	.06	.01	.01	0
14	.09	.18	.18	.17	.25	.25	.45	.13	.06	.01	.01	0
15	.10	.18	.18	.17	.25	.27	.42	.17	.06	.01	.02	0
16	.15	.18	.18	.18	.25	.29	.40	.14	.05	.01	.01	0
17	.14	.18	.15	.18	.25	.29	.42	.15	.02	0	.01	0
18	.13	.18	.15	.18	.26	.29	.37	.17	.02	.01	.02	.01
19	.12	.18	.15	.19	.26	.26	.36	.17	.02	.01	.02	.01
20	.12	.17	.16	.19	.26	.28	.35	.17	.02	.02	0	0
21	.11	.18	.16	.19	.27	.29	.34	.15	.04	.01	0	0
22	.11	.21	.16	.20	.27	.29	.32	.11	.03	.02	0	0
23	.12	.21	.15	.20	.27	.33	.33	.12	.03	.01	0	0
24	.14	.21	.16	.20	.27	.31	.31	.13	.03	.02	.01	0
25	.14	.20	.20	.21	.27	.31	.29	.14	.03	.02	.02	0
26	.13	.20	.15	.21	.27	.31	.27	.13	.01	.02	.01	0
27	.12	.19	.86	.23	.27	.33	.27	.13	.02	.02	.01	0
28	.13	.20	.21	.22	.27	.34	.23	.09	.02	.01	.01	0
29	.14	.22	.19	.21	.27	.34	.23	.10	.03	.02	0	0
30	.14	.21	.18	.25	------	.37	.22	.08	.02	.02	0	0
31	.14	------	.17	.25	------	.33	------	.09	------	.03	0	------
TOTAL	3.19	5.03	6.31	5.72	7.49	9.04	11.04	4.94	1.45	.41	.34	.04
MEAN	.10	.17	.20	.18	.26	.29	.37	.16	.048	.013	.011	.001
MAX	.15	.22	.86	.25	.28	.37	.48	.24	.09	.03	.03	.01
MIN	.04	.07	.15	.15	.24	.24	.22	.08	.01	0	0	0
AC-FT	6.3	10.0	13	11	15	18	22	9.8	2.9	.8	.7	.08

CAL YR 1971 TOTAL 136.36 MEAN .37 MAX .86 MIN 0 AC-FT 270
WTR YR 1972 TOTAL 55.00 MEAN .15 MAX .86 MIN 0 AC-FT 109

PEAK DISCHARGE (BASE, 50 CFS).--No peak above base.

11140000 SISQUOC RIVER NEAR GAREY, CALIF.

LOCATION.--Lat 34°53'38", long 120°18'20", in SW¼ sec.36, T.10 N., R.33 W., Santa Barbara County, on downstream side of county road bridge, 0.6 mile northeast of Garey, and 3.7 miles downstream from Tepusquet Creek.

DRAINAGE AREA.--471 sq mi.

PERIOD OF RECORD.--October 1940 to current year. Records for water year 1941 incomplete, yearly estimate and monthly discharge only for October 1940 and January 1941, published in WSP 1315-B.

GAGE.--Water-stage recorder. Datum of gage is 354.8 ft above mean sea level (Santa Barbara County bench mark). See WSP 1735 for history of changes prior to Oct. 1, 1959. Oct. 1, 1959, to Dec. 30, 1965, at datum 6.00 ft higher. Since Oct. 1, 1959, supplementary gage near left bank at same datum.

AVERAGE DISCHARGE.--32 years, 41.1 cfs (29,780 acre-ft per year); median of yearly mean discharges, 6.3 cfs (4,600 acre-ft per year).

EXTREMES.--Current year: Maximum discharge, 748 cfs Dec. 27 (gage height, 5.55 ft); no flow most of year. Period of record: Maximum discharge, 24,500 cfs Jan. 25, 1969 (gage height, 13.00 ft); no flow for several months in each year.

REMARKS.--Records fair. No regulation above station. Pumping from wells along stream for irrigation of about 7,000 acres above station.

DISCHARGE, IN CUBIC FEET PER SECOND, WATER YEAR OCTOBER 1971 TO SEPTEMBER 1972

DAY	OCT	NOV	DEC	JAN	FEB	MAR	APR	MAY	JUN	JUL	AUG	SEP
1			0	.04								
2			0	0								
3			0	0								
4			0	0								
5			0	0								
6			0	0								
7			0	0								
8			0	0								
9			0	0								
10			0	0								
11			0	0								
12			0	0								
13			0	0								
14			0	0								
15			0	0								
16			0	0								
17			0	0								
18			0	0								
19			0	0								
20			0	0								
21			0	0								
22			0	0								
23			0	0								
24			0	0								
25			0	0								
26			137	0								
27			299	0								
28			76	0								
29			3.6	0								
30			.45	0	------							
31		------	.17	0	------		------		------			------
TOTAL	0	0	516.22	.04	0	0	0	0	0	0	0	0
MEAN	0	0	16.7	.001	0	0	0	0	0	0	0	0
MAX	0	0	299	.04	0	0	0	0	0	0	0	0
MIN	0	0	0	0	0	0	0	0	0	0	0	0
AC-FT	0	0	1,020	.08	0	0	0	0	0	0	0	0

CAL YR 1971 TOTAL 1,023.90 MEAN 2.81 MAX 299 MIN 0 AC-FT 2,030
WTR YR 1972 TOTAL 516.26 MEAN 1.41 MAX 299 MIN 0 AC-FT 1,020

PEAK DISCHARGE (BASE, 100 CFS).--Dec. 27 (1430) 748 cfs (5.55 ft).

11140600 BRADLEY DITCH NEAR DONOVAN ROAD, AT SANTA MARIA, CALIF.

LOCATION.--Lat 34°58'00", long 120°25'00", in NE¼NE¼NE¼ sec.11, T.10 N., R.34 W., Santa Barbara County, on left bank 250 ft (revised) south of Donovan Road, and 0.2 mile east of U.S. Highway 101, Santa Maria.

PERIOD OF RECORD.--October 1970 to current year.

GAGE.--Water-stage recorder. Altitude of gage is 225 ft (from topographic map).

EXTREMES.--Current year: Maximum discharge, 28 cfs Dec. 27 (gage height, 2.17 ft); no flow for several days. Period of record: Maximum discharge, 98 cfs Dec. 21, 1970 (gage height, 3.29 ft); no flow at times in each year.

REMARKS.--Records poor. Runoff affected by urbanization.

COOPERATION.--Gage-height record furnished by Santa Barbara County Flood Control and Water Conservation District.

DISCHARGE, IN CUBIC FEET PER SECOND, WATER YEAR OCTOBER 1971 TO SEPTEMBER 1972

DAY	OCT	NOV	DEC	JAN	FEB	MAR	APR	MAY	JUN	JUL	AUG	SEP
1	.17	.21	.08	0	.32	.04	.86	.27	.16	.26	.33	.30
2	.28	.23	.82	0	.11	.54	.05	.26	.16	.26	.65	.30
3	.08	.20	.08	0	.39	.75	.13	.25	.17	.26	.84	.28
4	0	.37	.08	.02	.30	.95	.68	.24	.17	.26	.81	.24
5	.02	.67	.02	.02	.40	.56	.55	.24	.17	.27	.72	.19
6	.28	.52	.08	.82	.12	.41	.54	.23	.17	.27	.19	.30
7	.28	.01	.17	.58	.41	.53	.52	.22	.18	.27	.49	.17
8	.35	.45	.12	.58	.49	.36	.51	.22	.18	.27	.48	.22
9	.28	.29	.17	.12	.34	.58	.50	.21	.18	.28	.62	.30
10	.02	.27	1.1	.74	.14	.49	.48	.21	.19	.28	.75	.22
11	0	.59	1.0	1.0	.31	.12	.47	.20	.19	.28	1.0	.17
12	.28	.88	.50	.35	.20	.07	.46	.19	.19	.28	1.2	.30
13	.12	.07	.04	.66	.05	.38	.45	.19	.20	.28	.29	.43
14	.35	.01	.04	.58	.27	.33	.43	.18	.20	.29	.99	.26
15	.08	0	.02	.58	.84	.71	.42	.18	.21	.29	.77	.54
16	.12	0	.23	.05	.39	1.2	.41	.17	.21	.29	.75	.45
17	.12	0	.66	.42	.97	1.2	.40	.17	.21	.29	.34	.06
18	.23	.05	.58	.30	.80	.84	.39	.16	.22	.30	.74	0
19	.02	.03	.17	1.3	.65	.21	.37	.16	.22	.30	.72	0
20	.23	.06	.50	1.1	.11	.37	.36	.15	.22	.30	.37	.29
21	.58	0	.12	.47	.29	.79	.35	.15	.23	.30	.64	.23
22	.17	.26	1.8	.04	1.2	.54	.35	.15	.23	.30	.92	.38
23	.24	.36	.29	.09	.64	.61	.34	.14	.24	.31	.86	.61
24	.18	.35	1.3	.17	.44	.43	.32	.14	.24	.31	.65	.69
25	0	.17	3.2	.78	.51	.26	.32	.14	.25	.31	.45	.29
26	.02	.23	1.3	.62	.25	.04	.31	.14	.25	.31	.44	.71
27	.33	.66	8.9	.35	.05	.04	.30	.15	.25	.31	.39	.88
28	0	.58	2.1	.32	.04	.48	.29	.15	.25	.32	.28	.27
29	.05	.35	.28	.36	.07	.69	.28	.15	.25	.32	.41	.27
30	.48	.17	.08	.43	------	.66	.27	.16	.26	.32	.37	0
31	.13	------	0	.18	------	.50	------	.16	------	.32	.32	------
TOTAL	5.49	8.04	25.83	13.03	11.10	15.68	12.11	5.73	6.25	9.01	18.78	9.35
MEAN	.18	.27	.83	.42	.38	.51	.40	.18	.21	.29	.61	.31
MAX	.58	.88	8.9	1.3	1.2	1.2	.86	.27	.26	.32	1.2	.88
MIN	0	0	0	0	.04	.04	.05	.14	.16	.26	.19	0
AC-FT	11	16	51	26	22	31	24	11	12	18	37	19

CAL YR 1971 TOTAL 162.72 MEAN .45 MAX 8.9 MIN 0 AC-FT 323
WTR YR 1972 TOTAL 140.40 MEAN .38 MAX 8.9 MIN 0 AC-FT 278

NOTE.--No gage-height record Apr. 6 to May 31, June 7 to July 30.

11141000 SANTA MARIA RIVER AT GUADALUPE, CALIF.

LOCATION.--Lat 34°58'35", long 120°34'15", in Guadalupe Grant, Santa Barbara County, on downstream side of bridge on State Highway 1, 0.5 mile north of Guadalupe, and 4.5 miles upstream from mouth.

DRAINAGE AREA.--1,741 sq mi.

PERIOD OF RECORD.--October 1940 to current year. Monthly discharge only October 1940 to January 1941, published in WSP 1315-B.

GAGE.--Water-stage recorder and supplementary gage near right bank. Datum of gage is 64.92 ft above mean sea level. Prior to Aug. 11, 1955, at site 100 ft upstream at same datum.

AVERAGE DISCHARGE.--32 years, 33.4 cfs (24,200 acre-ft per year); median of yearly mean discharges, 0.9 cfs (650 acre-ft per year).

EXTREMES.--Current year: No flow during year.
Period of record: Maximum discharge, 32,800 cfs Jan. 16, 1952 (gage height, 8.18 ft); no flow for all or parts of each year.

REMARKS.--No flow since Mar. 8, 1970. Cuyama River regulated since February 1959 by Twitchell Reservoir (capacity, 240,000 acre-ft). Several small surface diversions and extensive pumping from wells for irrigation along stream above station. AVERAGE DISCHARGE represents flow to ocean, regardless of upstream development.

11141150 ARROYO GRANDE ABOVE PHOENIX CREEK NEAR ARROYO GRANDE, CALIF.

LOCATION.--Lat 35°11'03", long 120°26'11", in Arroyo Grande Grant, San Luis Obispo County, on right bank at county road bridge 100 ft upstream from Phoenix Creek, 8.8 miles northeast of Arroyo Grande.

DRAINAGE AREA.--13.5 sq mi.

PERIOD OF RECORD.--June 1967 to current year.

GAGE.--Water-stage recorder and concrete control. Altitude of gage is 550 ft (from topographic map).

AVERAGE DISCHARGE.--5 years, 3.32 cfs (2,410 acre-ft per year).

EXTREMES.--Current year: Maximum discharge, 6.4 cfs Dec. 24 (gage height, 4.48 ft); minimum daily, 0.18 cfs Aug. 11-17, Aug. 26 to Sept. 1.
Period of record: Maximum discharge, 1,270 cfs Jan. 25, 1969 (gage height, 6.83 ft in gage well, 6.57 ft, from floodmarks), from rating curve extended above 350 cfs on basis of slope-area measurement of maximum flow; minimum daily, 0.16 cfs Aug. 9, 1971.

REMARKS.--Records fair. No regulation or diversion above station. Records of water temperatures and total sediment discharge for the current year are published in Part 2 of this report.

DISCHARGE, IN CUBIC FEET PER SECOND, WATER YEAR OCTOBER 1971 TO SEPTEMBER 1972

DAY	OCT	NOV	DEC	JAN	FEB	MAR	APR	MAY	JUN	JUL	AUG	SEP
1	.81	1.2	1.2	1.7	1.5	1.0	1.0	.42	.40	.40	.21	.18
2	.79	1.2	1.2	1.5	1.6	1.2	1.0	.61	.41	.40	.31	.24
3	.67	1.0	1.3	1.7	1.6	1.2	1.0	.68	.37	.39	.40	.24
4	.61	1.2	1.4	1.7	1.6	1.1	.87	1.0	.42	.39	.31	.24
5	.61	1.2	1.2	1.7	2.0	1.1	.87	1.0	.41	.63	.31	.24
6	.61	1.2	1.2	1.5	1.7	1.1	.87	1.5	.40	.74	.24	.19
7	.57	1.2	1.0	1.5	1.6	.95	.87	.87	.46	.61	.24	.22
8	.61	1.2	.87	1.5	1.5	.68	.74	.74	.50	.49	.24	.24
9	.61	1.1	.87	1.7	1.5	.71	.74	.74	.50	.41	.24	.24
10	.61	1.0	.87	1.5	1.5	.74	.87	.74	.50	.41	.24	.27
11	.40	1.2	.87	1.5	1.3	.74	1.0	.74	.41	.39	.18	.28
12	.40	1.7	1.0	1.7	1.3	.74	1.0	.74	.39	.32	.18	.31
13	.24	1.5	.87	1.5	1.3	.61	1.0	.74	.39	.32	.18	.28
14	.34	1.3	.87	1.7	1.2	.61	.93	.74	.42	.32	.18	.29
15	.37	1.2	.83	1.7	1.2	.61	.74	.61	.40	.32	.18	.29
16	.44	1.1	.87	1.5	1.2	.78	.74	.50	.39	.40	.18	.29
17	.46	1.1	1.2	1.5	1.0	.99	.74	.50	.50	.40	.18	.29
18	.45	1.0	1.3	1.7	1.1	.95	.80	.50	.47	.38	.24	.28
19	.46	1.2	1.0	1.7	1.1	.87	.74	.61	.50	.42	.24	.28
20	.47	1.2	1.0	1.7	1.2	.84	.87	.56	.46	.41	.24	.26
21	.47	1.2	.87	1.5	1.0	.87	.87	.47	.50	.31	.40	.26
22	1.2	1.2	2.8	1.7	1.1	.88	.87	.43	.50	.38	.89	.25
23	1.0	1.2	2.4	1.7	1.0	.96	.61	.42	.56	.42	.40	.23
24	1.0	1.0	3.1	1.7	.95	1.0	.61	.44	.53	.40	.31	.26
25	1.0	1.0	2.8	1.7	.99	1.0	.61	.40	.53	.40	.24	.28
26	1.0	.99	2.2	2.0	1.0	1.0	.61	.45	.54	.35	.18	.29
27	1.0	1.0	4.1	2.1	.92	1.2	.61	.42	.53	.40	.18	.29
28	1.0	1.0	3.1	1.7	1.1	1.2	.61	.41	.50	.40	.18	.29
29	1.0	1.1	2.4	1.7	1.2	1.0	.61	.40	.40	.40	.18	.29
30	1.0	1.2	1.7	1.7	------	1.0	.50	.40	.40	.40	.18	.30
31	1.2	------	1.7	1.7	------	1.0	------	.40	------	.30	.18	------
TOTAL	21.40	34.89	48.09	51.4	37.26	28.63	23.90	19.18	13.69	12.71	8.04	7.89
MEAN	.69	1.16	1.55	1.66	1.28	.92	.80	.62	.46	.41	.26	.26
MAX	1.2	1.7	4.1	2.1	2.0	1.2	1.0	1.5	.56	.74	.89	.31
MIN	.24	.99	.83	1.5	.92	.61	.50	.40	.37	.30	.18	.18
AC-FT	42	69	95	102	74	57	47	38	27	25	16	16

CAL YR 1971 TOTAL 474.37 MEAN 1.30 MAX 4.5 MIN .16 AC-FT 941
WTR YR 1972 TOTAL 307.08 MEAN .84 MAX 4.1 MIN .18 AC-FT 609

PEAK DISCHARGE (BASE, 20 CFS).--No peak above base.

11141160 WITTENBERG CREEK NEAR ARROYO GRANDE, CALIF.

LOCATION.--Lat 35°13'02", long 120°27'17", in NE¼NE¼ sec.22, T.31 S., R.14 E., San Luis Obispo County, on left bank 0.4 mile upstream from Huffs Hole Creek, and 10 miles northeast of Arroyo Grande.

DRAINAGE AREA.--3.11 sq mi.

PERIOD OF RECORD.--August 1967 to current year.

GAGE.--Water-stage recorder. Altitude of gage is 560 ft (from topographic map). Prior to Oct. 8, 1970, at site 0.2 mile downstream at same datum.

AVERAGE DISCHARGE.--5 years, 1.08 cfs (782 acre-ft per year).

EXTREMES.--Current year: Maximum discharge, 25 cfs Dec. 27 (gage height, 3.00 ft); no flow for many days.
Period of record: Maximum discharge, 840 cfs Jan. 19, 1969 (gage height, 7.9 ft, from outside gage); no flow many days in most years.

REMARKS.--Records good. No regulation; small diversions above station for domestic use.

DISCHARGE, IN CUBIC FEET PER SECOND, WATER YEAR OCTOBER 1971 TO SEPTEMBER 1972

DAY	OCT	NOV	DEC	JAN	FEB	MAR	APR	MAY	JUN	JUL	AUG	SEP
1	.05	.02	.07	.25	.41	.21	.12	.10	.03	.03	.04	0
2	.05	0	.07	.25	.33	.21	.12	.10	.03	.03	.03	0
3	.05	.02	.07	.24	.33	.21	.15	.10	.04	.03	.04	0
4	.05	.02	.07	.24	.33	.21	.13	.10	.04	.03	.04	0
5	.05	0	.07	.24	.65	.21	.13	.10	.04	.02	.06	.01
6	.05	0	.07	.24	.37	.21	.13	.07	.04	.02	.05	.01
7	.01	0	.10	.24	.26	.21	.16	.07	.04	.01	.04	.01
8	0	0	.10	.24	.26	.19	.13	.07	.05	.01	.05	.02
9	0	.02	.10	.24	.26	.17	.17	.07	.04	.01	.06	.02
10	0	.01	.10	.24	.26	.17	.17	.07	.04	.01	.05	.04
11	0	.05	.10	.25	.26	.16	.21	.07	.04	.01	0	.04
12	0	.02	.13	.26	.26	.17	.21	.05	.04	.01	.02	.02
13	0	0	.13	.29	.26	.17	.21	.02	.04	.02	0	.01
14	.02	0	.13	.33	.26	.17	.20	.02	.07	.02	.01	.01
15	.02	0	.13	.36	.26	.17	.17	.02	.07	.02	0	.02
16	.05	.01	.13	.40	.26	.21	.17	.05	.05	.03	0	.02
17	.05	.02	.13	.41	.26	.21	.17	.05	.07	.04	0	.03
18	.07	.01	.13	.41	.26	.21	.17	.05	.07	.04	0	.02
19	.05	0	.13	.41	.26	.21	.17	.05	.07	.04	0	.01
20	.05	.01	.17	.33	.21	.21	.17	.07	.07	.05	0	0
21	.02	.01	.17	.33	.21	.20	.20	.05	.07	.07	0	0
22	.05	.01	.72	.33	.21	.20	.13	.05	.07	.08	0	0
23	.02	.01	.50	.33	.21	.18	.13	.05	.07	.08	0	0
24	.02	.05	.72	.36	.21	.20	.13	.05	.07	.07	0	0
25	.05	.05	.86	.33	.21	.19	.17	.05	.07	.09	0	0
26	.05	.05	.86	.37	.21	.17	.17	.05	.07	.09	0	0
27	.05	.05	8.7	.47	.21	.13	.17	.05	.07	.08	0	0
28	0	.05	2.0	.47	.21	.13	.13	.05	.03	.08	0	.02
29	0	.07	.90	.41	.21	.13	.10	.05	.03	.09	0	.02
30	0	.07	.27	.41	------	.13	.10	.05	.03	.09	0	.04
31	0	------	.26	.41	------	.13	------	.05	------	.05	0	------
TOTAL	.88	.63	18.09	10.09	7.90	5.68	4.69	1.85	1.56	1.35	.49	.37
MEAN	.028	.021	.58	.33	.27	.18	.16	.060	.052	.044	.016	.012
MAX	.07	.07	8.7	.47	.65	.21	.21	.10	.07	.09	.06	.04
MIN	0	0	.07	.24	.21	.13	.10	.02	.03	.01	0	0
AC-FT	1.8	1.3	36	20	16	11	9.3	3.7	3.1	2.7	1.0	.7

CAL YR 1971 TOTAL 119.89 MEAN .33 MAX 9.7 MIN 0 AC-FT 238
WTR YR 1972 TOTAL 53.58 MEAN .15 MAX 8.7 MIN 0 AC-FT 106

PEAK DISCHARGE (BASE, 50 CFS).--No peak above base.

11141280 LOPEZ CREEK NEAR ARROYO GRANDE, CALIF.

LOCATION.--Lat 35°13'48", long 120°28'22", in SE¼NE¼ sec.16, T.31 S., R.14 E., San Luis Obispo County, on right bank 0.7 mile upstream from small right-bank tributary, 3.2 miles upstream from mouth, and 9.2 miles northeast of Arroyo Grande.

DRAINAGE AREA.--21.6 sq mi.

PERIOD OF RECORD.--July 1967 to current year.

GAGE.--Water-stage recorder and concrete control. Altitude of gage is 540 ft (from topographic map).

AVERAGE DISCHARGE.--5 years, 10.6 cfs (7,680 acre-ft per year).

EXTREMES.--Current year: Maximum discharge, 199 cfs Dec. 27 (gage height, 4.98 ft); minimum daily, 0.56 cfs Aug. 15.
Period of record: Maximum discharge, 2,830 cfs Jan. 25, 1969 (gage height, 9.26 ft in gage well, 10.8 ft, from floodmarks), from rating curve extended above 300 cfs on basis of slope-area measurement of maximum flow; minimum daily, 0.56 cfs Aug. 15, 1972.

REMARKS.--Records good. Small diversions above station for domestic use. Records of water temperatures and suspended-sediment discharge for the current year are published in Part 2 of this report.

DISCHARGE, IN CUBIC FEET PER SECOND, WATER YEAR OCTOBER 1971 TO SEPTEMBER 1972

DAY	OCT	NOV	DEC	JAN	FEB	MAR	APR	MAY	JUN	JUL	AUG	SEP
1	1.4	3.7	2.8	5.1	3.7	3.0	2.7	2.0	1.5	1.3	.82	.95
2	1.4	3.2	2.7	4.9	3.4	2.9	2.7	2.0	1.4	1.3	.81	1.0
3	1.4	3.0	2.7	4.3	3.4	2.9	2.5	2.0	1.4	1.3	.83	1.1
4	1.3	2.9	2.7	4.0	3.4	2.9	2.7	2.0	1.4	1.2	.89	1.1
5	1.3	2.9	2.7	4.0	5.7	2.9	2.7	2.1	1.4	1.2	.88	1.2
6	1.3	2.9	2.7	3.7	6.7	2.7	2.5	2.1	1.4	1.2	.76	1.1
7	1.3	3.0	2.7	3.7	5.7	2.7	2.5	2.3	1.5	1.2	.77	1.1
8	1.3	3.0	2.7	3.7	5.1	2.5	2.3	2.1	1.6	1.2	.64	1.3
9	1.3	3.0	2.7	3.7	4.9	2.5	2.3	2.1	1.6	1.2	.73	1.3
10	1.3	2.7	2.7	3.7	4.6	2.7	2.3	2.1	1.5	1.2	.63	1.3
11	1.4	3.0	2.7	3.7	4.3	2.7	3.0	2.0	1.4	1.2	.65	1.3
12	1.6	6.0	2.7	3.4	4.3	2.7	3.0	2.0	1.3	1.2	.63	1.2
13	1.8	4.6	2.5	3.4	4.0	2.7	2.9	1.8	1.3	1.1	.67	1.1
14	2.3	4.3	2.5	3.2	3.7	2.7	2.3	1.8	1.3	1.1	.62	1.2
15	2.0	3.7	2.5	3.2	3.7	2.7	2.1	1.8	1.3	1.1	.56	1.1
16	2.0	3.7	2.5	3.2	3.7	2.5	2.1	2.0	1.3	1.2	.60	1.1
17	2.1	3.2	2.5	3.2	3.4	2.5	2.1	2.0	1.3	1.2	.57	1.1
18	2.0	3.0	2.5	3.2	3.4	2.7	2.1	2.0	1.4	1.1	.71	1.1
19	2.1	3.2	2.5	3.2	3.4	2.7	2.1	2.3	1.4	1.2	.78	1.1
20	1.8	3.7	2.5	3.0	3.4	2.5	2.1	2.3	1.3	1.3	.70	1.1
21	1.6	3.7	2.5	3.0	3.2	2.7	2.1	2.1	1.3	1.3	.59	1.1
22	1.6	3.2	6.0	3.0	3.2	2.7	2.1	2.1	1.3	1.2	.65	1.1
23	1.8	3.2	7.1	3.0	3.4	2.5	2.3	1.8	1.5	1.2	.65	1.1
24	2.0	2.9	7.5	3.0	3.2	2.5	2.3	1.8	1.4	1.2	.58	1.1
25	2.0	2.9	15	3.0	3.2	2.5	2.1	2.0	1.4	1.1	.66	1.1
26	2.0	2.8	17	3.0	3.2	2.3	2.1	1.8	1.4	1.1	.75	1.0
27	2.0	2.8	76	4.6	3.0	2.5	2.0	1.8	1.4	1.0	.79	1.0
28	2.1	2.8	26	6.0	3.0	2.5	2.0	1.6	1.3	.96	.79	1.0
29	2.1	2.8	12	4.9	3.0	2.7	2.0	1.6	1.2	.91	.71	1.0
30	3.2	2.8	7.5	4.3	------	2.7	2.0	1.5	1.2	1.0	.74	1.0
31	3.7	------	6.0	4.0	------	2.7	------	1.5	------	.91	.95	------
TOTAL	56.5	98.6	235.1	115.3	112.3	82.4	70.0	60.4	41.4	35.88	22.11	33.55
MEAN	1.82	3.29	7.58	3.72	3.87	2.66	2.33	1.95	1.38	1.16	.71	1.11
MAX	3.7	6.0	76	6.0	6.7	3.0	3.0	2.3	1.6	1.3	.95	1.3
MIN	1.3	2.7	2.5	3.0	3.0	2.3	2.0	1.5	1.2	.91	.56	.95
AC-FT	112	196	466	229	223	163	139	120	82	71	44	66

CAL YR 1971 TOTAL 1,631.71 MEAN 4.47 MAX 76 MIN .65 AC-FT 3,240
WTR YR 1972 TOTAL 963.34 MEAN 2.63 MAX 76 MIN .56 AC-FT 1,910

PEAK DISCHARGE (BASE, 20 CFS).--Dec. 27 (0145) 199 cfs (4.98 ft).

11141400 TAR SPRING CREEK NEAR ARROYO GRANDE, CALIF.

LOCATION.--Lat 35°07'56", long 120°32'30", in Santa Manuela Grant, San Luis Obispo County, on right bank 0.5 mile upstream from mouth, and 2.1 miles northeast of Arroyo Grande.

DRAINAGE AREA.--18.2 sq mi.

PERIOD OF RECORD.--August 1967 to current year.

GAGE.--Water-stage recorder and rain gage. Altitude of gage is 180 ft (from topographic map). Prior to May 20, 1969, at site 0.3 mile upstream at datum 24.00 ft higher.

AVERAGE DISCHARGE.--5 years, 3.31 cfs (2,400 acre-ft per year).

EXTREMES.--Current year: Maximum discharge, 11 cfs Dec. 27 (gage height, 4.34 ft); minimum daily, 0.01 cfs Sept. 16-30.
Period of record: Maximum discharge, 1,340 cfs Jan. 25, 1969 (gage height, 10.1 ft, from floodmarks), from rating curve extended above 68 cfs on basis of slope-area measurement of maximum flow; no flow at times.

REMARKS.--Records poor. No regulation; some diversion above station for irrigation.

DISCHARGE, IN CUBIC FEET PER SECOND, WATER YEAR OCTOBER 1971 TO SEPTEMBER 1972

DAY	OCT	NOV	DEC	JAN	FEB	MAR	APR	MAY	JUN	JUL	AUG	SEP
1	.04	.05	.05	.43	.56	.22	.24	.22	.06	.06	.05	.06
2	.04	.05	.05	.47	.56	.18	.22	.21	.06	.06	.05	.06
3	.04	.05	.06	.47	.55	.16	.25	.19	.06	.06	.05	.08
4	.04	.05	.06	.47	.53	.14	.16	.19	.05	.05	.05	.10
5	.04	.05	.05	.52	.52	.11	.45	.19	.05	.06	.05	.10
6	.03	.04	.05	.52	.52	.14	.36	.17	.06	.07	.05	.06
7	.03	.04	.05	.52	.52	.14	.20	.16	.06	.07	.06	.06
8	.03	.04	.05	.52	.54	.14	.14	.15	.06	.06	.05	.05
9	.06	.04	.06	.52	.54	.14	.13	.14	.06	.06	.05	.05
10	.08	.05	.05	.52	.47	.14	.11	.11	.06	.06	.05	.04
11	.08	.05	.05	.52	.47	.15	.13	.10	.06	.05	.05	.04
12	.08	.06	.06	.52	.46	.11	.12	.10	.06	.04	.05	.04
13	.06	.06	.05	.52	.39	.11	.15	.11	.06	.04	.05	.03
14	.08	.05	.05	.52	.39	.11	.14	.10	.06	.04	.05	.02
15	.09	.05	.05	.50	.45	.11	.14	.09	.05	.05	.05	.02
16	.11	.05	.06	.45	.59	.11	.14	.06	.05	.05	.05	.01
17	.14	.04	.05	.43	.61	.11	.25	.06	.05	.05	.05	.01
18	.11	.04	.05	.45	.61	.11	.33	.06	.05	.05	.05	.01
19	.11	.04	.05	.69	.49	.11	.32	.06	.04	.05	.05	.01
20	.10	.03	.05	1.4	.43	.10	.32	.06	.05	.05	.05	.01
21	.10	.03	.06	1.6	.39	.11	.32	.06	.06	.05	.05	.01
22	.10	.03	.10	1.5	.84	.11	.30	.06	.06	.04	.05	.01
23	.10	.04	.10	1.2	.76	.11	.28	.06	.06	.04	.05	.01
24	.10	.05	.11	1.0	.38	.11	.28	.06	.05	.04	.05	.01
25	.08	.05	.11	.84	.34	.16	.26	.06	.06	.05	.05	.01
26	.05	.05	.11	.85	.32	.14	.24	.06	.08	.05	.05	.01
27	.06	.05	2.9	.76	.28	.12	.25	.06	.08	.05	.05	.01
28	.05	.05	.71	.73	.28	.13	.25	.06	.08	.05	.05	.01
29	.05	.05	.52	.66	.28	.24	.23	.06	.06	.05	.05	.01
30	.05	.05	.47	.61	------	.25	.22	.06	.06	.05	.05	.01
31	.06	------	.43	.56	------	.25	------	.06	------	.05	.05	------
TOTAL	2.19	1.38	6.67	21.27	14.07	4.37	6.93	3.19	1.76	1.60	1.56	.96
MEAN	.071	.046	.22	.69	.49	.14	.23	.10	.059	.052	.050	.032
MAX	.14	.06	2.9	1.6	.84	.25	.45	.22	.08	.07	.06	.10
MIN	.03	.03	.05	.43	.28	.10	.11	.06	.04	.04	.05	.01
AC-FT	4.3	2.7	13	42	28	8.7	14	6.3	3.5	3.2	3.1	1.9
(a)	.37	1.28	4.96	.49	.32	0	.39	0	0	0	0	0

CAL YR 1971 TOTAL 179.05 MEAN .49 MAX 9.3 MIN .02 AC-FT 355
WTR YR 1972 TOTAL 65.95 MEAN .18 MAX 2.9 MIN .01 AC-FT 131

PEAK DISCHARGE (BASE, 20 CFS).--No peak above base.

a Precipitation, in inches.

11141500 ARROYO GRANDE AT ARROYO GRANDE, CALIF.

LOCATION.--Lat 35°07'28", long 120°34'05", in Pismo Grant, San Luis Obispo County, on left bank at Arroyo Grande, 0.7 mile upstream from U.S. Highway 101.

DRAINAGE AREA.--102 sq mi.

PERIOD OF RECORD.--October 1939 to current year. Records for water year 1940 incomplete, yearly estimate published in WSP 1315-B.

GAGE.--Water-stage recorder and broad-crested weir. Datum of gage is 97.77 ft above mean sea level. Prior to July 10, 1947, at datum 0.50 ft higher.

AVERAGE DISCHARGE.--29 years (1939-68), 19.4 cfs (14,060 acre-ft per year); median of yearly mean discharges, 8.0 cfs (5,800 acre-ft per year).

EXTREMES.--Current year: Maximum discharge, 470 cfs Dec. 27 (gage height, 4.02 ft); minimum daily, 0.27 cfs June 3.
Period of record: Maximum discharge, 5,400 cfs Dec. 6, 1966 (gage height, 12.88 ft); no flow for several days in some years. Maximum discharge since construction of Lopez Dam in 1968, 2,990 cfs Feb. 24, 1969 (gage height, 9.48 ft).

REMARKS.--Records good. Flow regulated by Lopez Dam 7.8 miles upstream since 1968 (usable capacity, 47,800 acre-ft). Many small and intermittent diversions by pumping from stream for irrigation of about 4,000 acres above station.

REVISIONS (WATER YEARS).--WSP 931: 1940. WSP 1011: 1941, 1942(M). WSP 1929: Drainage area.

DISCHARGE, IN CUBIC FEET PER SECOND, WATER YEAR OCTOBER 1971 TO SEPTEMBER 1972

DAY	OCT	NOV	DEC	JAN	FEB	MAR	APR	MAY	JUN	JUL	AUG	SEP
1	4.2	4.6	4.2	21	4.4	3.1	4.2	3.7	3.1	4.7	2.9	4.4
2	4.9	4.4	4.0	15	4.6	2.1	3.1	4.0	1.7	2.8	2.3	5.1
3	4.6	4.6	4.4	6.5	4.4	2.0	4.0	3.1	.27	4.1	1.6	4.9
4	4.2	4.6	4.9	6.5	4.2	.91	3.2	4.9	2.8	3.1	2.5	5.8
5	3.2	5.2	4.9	6.5	4.9	1.0	3.5	5.2	2.6	2.9	2.7	5.6
6	3.1	6.8	4.6	6.0	4.4	2.6	4.4	5.6	3.7	2.5	4.0	5.2
7	3.1	6.8	4.4	5.4	4.6	2.1	4.4	5.6	4.4	1.9	3.8	5.3
8	5.2	6.0	4.0	5.4	4.2	2.6	4.0	5.4	5.1	2.7	3.7	3.1
9	4.4	5.6	3.5	5.4	4.2	3.7	4.0	4.4	4.5	2.2	3.4	3.7
10	4.9	4.9	4.0	5.4	4.2	3.1	3.7	3.7	3.4	3.3	5.1	5.5
11	5.4	5.6	3.7	4.9	3.7	2.0	4.9	2.7	3.0	4.0	5.4	5.0
12	4.4	8.2	3.7	4.6	2.6	2.9	5.6	2.1	2.4	3.0	6.1	5.6
13	5.4	6.8	14	4.4	3.1	1.8	5.4	2.4	.99	2.0	5.7	2.6
14	4.4	6.5	32	4.2	3.2	2.4	4.9	3.2	2.5	3.8	5.0	2.3
15	4.2	5.6	29	4.6	4.2	2.4	5.2	3.7	2.2	3.4	4.3	3.0
16	4.6	5.6	29	4.6	3.7	3.5	7.0	3.2	1.6	4.2	3.4	2.8
17	4.4	6.0	18	4.4	2.0	3.2	5.6	4.6	2.1	3.1	3.2	3.7
18	4.9	6.0	3.5	4.6	2.1	3.2	6.8	4.6	2.1	.78	3.0	3.9
19	5.4	6.0	4.2	4.4	2.1	3.2	5.2	3.2	3.2	2.1	3.9	2.8
20	4.4	5.6	3.2	4.0	2.2	4.4	3.7	3.7	3.7	2.3	2.8	1.7
21	5.2	5.6	3.2	4.0	3.5	4.2	2.3	4.2	2.9	1.5	3.1	.52
22	4.6	5.2	4.4	4.2	3.7	4.2	2.7	1.6	3.4	3.0	1.7	1.3
23	4.4	5.2	4.4	4.4	2.1	4.0	4.9	1.4	4.3	3.3	.47	1.1
24	4.6	4.9	4.6	4.2	3.2	4.0	6.5	1.6	5.3	2.5	1.3	1.3
25	4.0	4.4	5.6	3.7	4.0	4.0	6.5	.62	4.1	3.0	1.9	2.7
26	4.9	4.9	6.2	4.2	2.1	4.0	4.9	.82	4.5	1.8	2.1	1.4
27	4.4	4.6	89	4.9	2.7	3.2	4.9	3.0	3.6	2.8	3.7	1.8
28	5.2	4.9	14	4.6	3.1	2.1	5.4	2.8	2.9	3.3	4.0	2.0
29	3.2	4.9	11	4.6	2.9	2.7	3.5	3.4	3.6	4.0	3.8	2.1
30	4.6	4.2	18	4.6	------	3.5	3.7	1.9	4.1	3.5	3.9	2.7
31	4.9	------	22	4.6	------	3.1	------	1.5	------	4.2	3.6	------
TOTAL	139.3	164.2	365.6	175.8	100.3	91.21	138.1	101.84	94.06	91.78	104.37	98.92
MEAN	4.49	5.47	11.8	5.67	3.46	2.94	4.60	3.29	3.14	2.96	3.37	3.30
MAX	5.4	8.2	89	21	4.9	4.4	7.0	5.6	5.3	4.7	6.1	5.8
MIN	3.1	4.2	3.2	3.7	2.0	.91	2.3	.62	.27	.78	.47	.52
AC-FT	276	326	725	349	199	181	274	202	187	182	207	196

CAL YR 1971 TOTAL 2,120.10 MEAN 5.81 MAX 89 MIN 1.8 AC-FT 4,210
WTR YR 1972 TOTAL 1,665.48 MEAN 4.55 MAX 89 MIN .27 AC-FT 3,300

11141600 LOS BERROS CREEK NEAR NIPOMO, CALIF.

LOCATION.--Lat 35°05'17", long 120°30'32", in Nipomo Grant (on boundary), San Luis Obispo County, on left bank at upstream side of bridge, 0.8 mile downstream from Adobe Creek, and 3.7 miles northwest of Nipomo.

DRAINAGE AREA.--15.0 sq mi.

PERIOD OF RECORD.--August 1968 to current year.

GAGE.--Water-stage recorder and broad-crested weir. Altitude of gage is 312 ft (from topographic map).

EXTREMES.--Current year: Maximum discharge, 1.5 cfs Dec. 27 (gage height, 1.41 ft); minimum daily, 0.02 cfs many days.

Period of record: Maximum discharge, 599 cfs Jan. 25, 1969 (gage height, 5.43 ft), from rating curve extended above 230 cfs on basis of slope-area measurement of maximum flow; minimum daily, 0.02 cfs many days in 1968 and 1972.

REMARKS.--Records good. No regulation or diversion above station.

DISCHARGE, IN CUBIC FEET PER SECOND, WATER YEAR OCTOBER 1971 TO SEPTEMBER 1972

DAY	OCT	NOV	DEC	JAN	FEB	MAR	APR	MAY	JUN	JUL	AUG	SEP
1	.12	.11	.12	.14	.20	.30	.14	.02	.10	.10	.07	.05
2	.12	.10	.12	.14	.20	.30	.06	.02	.08	.09	.09	.06
3	.12	.09	.12	.14	.17	.31	.04	.02	.09	.09	.08	.04
4	.12	.08	.12	.17	.14	.34	.05	.02	.10	.08	.08	.03
5	.12	.08	.11	.17	.13	.35	.07	.02	.13	.08	.08	.04
6	.12	.07	.10	.17	.11	.30	.06	.02	.09	.07	.07	.04
7	.12	.07	.10	.17	.10	.26	.02	.02	.08	.07	.06	.04
8	.13	.07	.10	.19	.19	.26	.02	.02	.07	.06	.06	.04
9	.15	.07	.10	.17	.23	.22	.07	.02	.05	.06	.05	.04
10	.14	.08	.10	.18	.23	.12	.03	.02	.04	.05	.05	.04
11	.13	.07	.10	.17	.23	.20	.04	.02	.05	.05	.05	.04
12	.15	.13	.10	.17	.23	.26	.02	.02	.05	.05	.05	.04
13	.16	.13	.10	.18	.25	.26	.02	.02	.08	.05	.06	.04
14	.16	.12	.10	.16	.26	.23	.02	.02	.08	.06	.06	.05
15	.17	.12	.10	.17	.26	.23	.02	.02	.13	.06	.06	.05
16	.20	.13	.10	.18	.26	.23	.04	.03	.14	.06	.05	.04
17	.20	.12	.10	.18	.24	.23	.04	.04	.19	.06	.05	.04
18	.20	.12	.12	.20	.27	.26	.02	.04	.20	.05	.05	.04
19	.19	.12	.12	.20	.30	.26	.02	.05	.20	.06	.07	.04
20	.17	.11	.12	.20	.26	.23	.02	.05	.21	.06	.07	.03
21	.15	.10	.17	.21	.26	.26	.02	.06	.24	.07	.06	.05
22	.12	.10	.67	.20	.28	.26	.02	.08	.23	.06	.05	.05
23	.13	.10	.60	.23	.28	.26	.02	.08	.26	.07	.05	.05
24	.14	.10	.60	.23	.28	.26	.02	.08	.20	.07	.04	.05
25	.14	.10	.74	.23	.28	.26	.02	.09	.16	.07	.04	.06
26	.14	.10	.89	.23	.31	.23	.02	.10	.14	.06	.05	.06
27	.12	.10	.32	.24	.32	.20	.02	.12	.13	.07	.05	.07
28	.12	.10	.17	.23	.30	.30	.02	.13	.12	.07	.06	.07
29	.12	.12	.14	.23	.30	.26	.02	.12	.11	.07	.06	.06
30	.12	.13	.14	.22	------	.23	.02	.08	.11	.07	.06	.06
31	.12	------	.14	.20	------	.14	------	.09	------	.07	.05	------
TOTAL	4.41	3.04	6.73	5.90	6.87	7.81	1.02	1.54	3.86	2.06	1.83	1.41
MEAN	.14	.10	.22	.19	.24	.25	.034	.050	.13	.067	.059	.047
MAX	.20	.13	.89	.24	.32	.35	.14	.13	.26	.10	.09	.07
MIN	.12	.07	.10	.14	.10	.12	.02	.02	.04	.05	.04	.03
AC-FT	8.8	6.0	13	12	14	15	2.0	3.1	7.7	4.1	3.6	2.8

CAL YR 1971 TOTAL 217.96 MEAN .60 MAX 10 MIN .07 AC-FT 432
WTR YR 1972 TOTAL 46.48 MEAN .13 MAX .8 MIN .02 AC-FT 92

PEAK DISCHARGE (BASE, 7 CFS).--No peak above base.

11142080 MORRO CREEK AT MORRO BAY, CALIF.

LOCATION.--Lat 35°22'42", long 120°51'12", in Moro Y Cayucos Grant, San Luis Obispo County, on left bank at upstream side of frontage road bridge in town of Morro Bay, and 700 ft downstream from Little Morro Creek.

DRAINAGE AREA.--24.0 sq mi.

PERIOD OF RECORD.--October 1970 to current year.

GAGE.--Water-stage recorder. Altitude of gage is 20 ft (from topographic map).

EXTREMES.--Current year: Maximum discharge, 37 cfs Dec. 27 (gage height, 3.31 ft); no flow for long periods.
Period of record: Maximum discharge, 262 cfs Dec. 21, 1970 (gage height, 4.05 ft); no flow for long periods in each year.

REMARKS.--Records good. No regulation; small diversion above station for individual use.

DISCHARGE, IN CUBIC FEET PER SECOND, WATER YEAR OCTOBER 1971 TO SEPTEMBER 1972

DAY	OCT	NOV	DEC	JAN	FEB	MAR	APR	MAY	JUN	JUL	AUG	SEP
1			0	.53	.25	.21						
2			0	.70	.25	.25						
3			0	1.4	.25	.13						
4			0	1.0	.34	.09						
5			0	.88	.61	0						
6			0	1.1	.88	0						
7			0	1.3	.70	0						
8			0	.79	.70	0						
9			0	.18	.70	0						
10			0	.15	.61	0						
11			0	.15	.47	0						
12			0	.29	.47	0						
13			0	.25	.47	0						
14			0	.21	.53	0						
15			0	.25	.61	0						
16			0	.18	1.3	0						
17			0	.11	2.2	0						
18			0	.13	.34	0						
19			0	.13	.47	0						
20			0	.15	.47	0						
21			0	.15	.41	0						
22			.04	.11	.61	0						
23			0	.11	.70	0						
24			.01	.13	1.0	0						
25			0	.13	.79	0						
26			.66	.29	.79	0						
27			.16	1.1	.70	0						
28			5.7	.79	.34	0						
29			2.2	.53	.34	0						
30			1.3	1.1	------	0						
31		------	.88	1.3	------	0	------		------			------
TOTAL	0	0	10.95	15.62	18.30	.68	0	0	0	0	0	0
MEAN	0	0	.35	.50	.63	.022	0	0	0	0	0	0
MAX	0	0	5.7	1.4	2.2	.25	0	0	0	0	0	0
MIN	0	0	0	.11	.25	0	0	0	0	0	0	0
AC-FT	0	0	22	31	36	1.4	0	0	0	0	0	0

CAL YR 1971 TOTAL 604.26 MEAN 1.66 MAX 54 MIN 0 AC-FT 1,200
WTR YR 1972 TOTAL 45.55 MEAN .12 MAX 5.7 MIN 0 AC-FT 90

PEAK DISCHARGE (BASE, 20 CFS).--Dec. 27 (1915) 37 cfs (3.31 ft).

11142100 TORO CREEK NEAR MORRO BAY, CALIF.

LOCATION.--Lat 35°25'31", long 120°51'33", in Moro Y Cayucos Grant, San Luis Obispo County, on left bank at downstream side of county road bridge, 0.3 mile downstream from small right-bank tributary, and 2.3 miles north of town of Morro Bay.

DRAINAGE AREA.--14.0 sq mi.

PERIOD OF RECORD.--October 1970 to current year.

GAGE.--Water-stage recorder. Altitude of gage is 40 ft (from topographic map).

EXTREMES.--Current year: Maximum discharge, 41 cfs Dec. 27 (gage height, 1.74 ft); no flow for several months. Period of record: Maximum discharge, 87 cfs Dec. 20, 1970 (gage height, 2.23 ft), from rating curve extended above 40 cfs; no flow for many days in each year.

REMARKS.--Records good. No regulation; small diversion above station for individual use.

DISCHARGE, IN CUBIC FEET PER SECOND, WATER YEAR OCTOBER 1971 TO SEPTEMBER 1972

DAY	OCT	NOV	DEC	JAN	FEB	MAR	APR	MAY	JUN	JUL	AUG	SEP
1	0	.10	.29	1.1	.71	.71	.14	.04	0			
2	0	.04	.27	.98	.71	.71	.12	.04	.01			
3	0	.02	.34	.98	.61	.83	.16	.07	0			
4	0	.04	.49	.83	.57	.83	.16	.08	0			
5	0	.02	.49	.83	.57	.78	.19	.08	0			
6	0	.01	.49	.83	.77	.71	.20	.09	0			
7	0	.01	.49	.83	.71	.71	.17	.06	0			
8	0	.01	.30	.83	.78	.83	.11	.05	0			
9	.04	.01	.12	.83	.94	.83	.10	.15	0			
10	.01	.01	.12	.83	.98	.83	.10	.19	0			
11	.02	.01	.12	.83	.83	.82	.10	.15	0			
12	.09	.01	.12	.83	.83	.59	.11	.08	0			
13	.05	.01	.12	.83	.83	.69	.19	.02	0			
14	.02	.01	.12	.83	.83	.45	.24	.01	0			
15	.02	.01	.12	.83	.71	.38	.25	.01	0			
16	.04	.01	.15	.83	.71	.44	.25	.02	0			
17	.04	.01	.16	.71	.71	.64	.21	.01	0			
18	.02	.01	.16	.71	.79	.83	.16	0	0			
19	.02	.01	.16	.71	.83	.45	.15	0	0			
20	.04	.01	.16	.71	.83	.31	.11	.01	0			
21	.08	.01	.16	.71	.83	.12	.08	.04	0			
22	.04	.01	.25	.71	.98	.22	.04	.01	0			
23	.04	.12	.25	.71	.83	.25	.02	0	0			
24	.08	.13	.43	.71	.83	.28	.02	.01	0			
25	.10	.20	.87	.57	.83	.15	.02	.02	0			
26	.10	.20	2.2	.57	.83	.11	.04	.02	0			
27	.10	.20	7.8	1.4	.71	.09	.08	.04	0			
28	.12	.20	2.4	1.4	.71	.08	.08	.04	0			
29	.10	.20	1.6	1.3	.71	.12	.08	.02	0			
30	.12	.25	1.3	1.1	------	.12	.06	0	0			
31	.10	------	1.1	.90	------	.15	------	0	------			------
TOTAL	1.39	1.89	23.15	26.77	22.51	15.06	3.74	1.36	.01	0	0	0
MEAN	.045	.063	.75	.86	.78	.49	.12	.044	.0003	0	0	0
MAX	.12	.25	7.8	1.4	.98	.83	.25	.19	.01	0	0	0
MIN	0	.01	.12	.57	.57	.08	.02	0	0	0	0	0
AC-FT	2.8	3.8	46	53	45	30	7.4	2.7	.02	0	0	0

CAL YR 1971 TOTAL 578.63 MEAN 1.59 MAX 16 MIN 0 AC-FT 1,150
WTR YR 1972 TOTAL 95.88 MEAN .26 MAX 7.8 MIN 0 AC-FT 190

PEAK DISCHARGE (BASE, 25 CFS).--Dec. 27 (0015) 41 cfs (1.74 ft).

11142200 SANTA ROSA CREEK NEAR CAMBRIA, CALIF.

LOCATION.--Lat 35°34'35", long 120°59'50", in NE¼ sec.21, T.27 S., R.9 E., San Luis Obispo County, on left bank 4.8 miles east of Cambria.

DRAINAGE AREA.--12.5 sq mi.

PERIOD OF RECORD.--August 1957 to September 1972 (discontinued).

GAGE.--Water-stage recorder. Datum of gage is 264.03 ft above mean sea level.

AVERAGE DISCHARGE.--15 years, 9.9 cfs (7,170 acre-ft per year); median of yearly mean discharges, 6.9 cfs (5,000 acre-ft per year).

EXTREMES.--Current year: Maximum discharge, 265 cfs Dec. 26 (gage height, 4.96 ft); no flow for several months.
Period of record: Maximum discharge, 3,350 cfs Jan. 25, 1969 (gage height, 12.02 ft), from rating curve extended above 1,300 cfs on basis of slope-area measurement at gage height 10.36 ft; no flow at times in each year.
Flood of December 1955 reached a stage of 15.2 ft, from floodmarks.

REMARKS.--Records good. No regulation; small diversions above station for irrigation.

REVISIONS (WATER YEARS).--WSP 1715: 1958.

DISCHARGE, IN CUBIC FEET PER SECOND, WATER YEAR OCTOBER 1971 TO SEPTEMBER 1972

DAY	OCT	NOV	DEC	JAN	FEB	MAR	APR	MAY	JUN	JUL	AUG	SEP
1		0	.07	6.4	1.0	.92	.69	.33				
2		0	.10	4.9	.92	.89	.67	.34				
3		0	.08	3.9	.83	.92	.75	.34				
4		0	.08	3.1	.75	.89	.75	.36				
5		0	.07	2.3	31	.79	.75	.37				
6		0	.08	2.3	21	.75	.80	.42				
7		0	.07	2.1	9.5	.75	.65	.45				
8		0	.07	1.8	6.8	.91	.58	.44				
9		0	.08	1.8	5.5	.92	.54	.42				
10		0	.12	1.6	4.6	.92	.62	.38				
11		0	.12	1.6	3.6	.88	1.4	.35				
12		0	.29	1.6	3.0	.83	1.4	.34				
13		0	.29	1.6	2.7	.91	1.5	.31				
14		0	.29	1.4	1.6	.83	.90	.29				
15		0	.37	1.3	2.1	.80	.72	.29				
16		0	.37	1.2	1.8	.81	.67	.22				
17		0	.42	1.2	1.6	.83	.64	.16				
18		0	.42	1.2	1.6	.82	.67	.14				
19		0	.42	1.1	1.4	.80	.63	.14				
20		0	.42	1.1	1.4	.75	.56	.01				
21		0	.57	1.1	1.4	.81	.54	0				
22		0	30	1.1	1.4	.82	.53	0				
23		0	11	1.1	1.2	.73	.48	0				
24		0	26	.99	1.1	.75	.52	0				
25		.02	91	.97	1.1	.73	.52	0				
26		.05	43	1.2	1.1	.67	.49	0				
27		.07	108	3.5	.98	.71	.44	0				
28		.08	48	5.8	.92	.70	.39	0				
29		.08	20	2.1	.92	.75	.38	0				
30		.07	12	1.2	------	.73	.36	0				
31		------	8.4	1.0	------	.70	------	0	------			------
TOTAL	0	.37	402.20	63.56	112.82	25.02	20.54	6.10	0	0	0	0
MEAN	0	.012	13.0	2.05	3.89	.81	.68	.20	0	0	0	0
MAX	0	.08	108	6.4	31	.92	1.5	.45	0	0	0	0
MIN	0	0	.07	.97	.75	.67	.36	0	0	0	0	0
AC-FT	0	.7	798	126	224	50	41	12	0	0	0	0

CAL YR 1971 TOTAL 1,371.56 MEAN 3.76 MAX 108 MIN 0 AC-FT 2,720
WTR YR 1972 TOTAL 630.61 MEAN 1.72 MAX 108 MIN 0 AC-FT 1,250

PEAK DISCHARGE (BASE, 450 CFS).--No peak above base.

11142500 ARROYO DE LA CRUZ NEAR SAN SIMEON, CALIF.

LOCATION.--Lat 35°43'02", long 121°17'02", in Piedra Blanca Grant, San Luis Obispo County, on right bank 1.7 miles upstream from mouth, and 7 miles northwest of San Simeon.

DRAINAGE AREA.--41.2 sq mi.

PERIOD OF RECORD.--October 1950 to current year.

GAGE.--Water-stage recorder. Altitude of gage is 22 ft (from topographic map).

AVERAGE DISCHARGE.--22 years, 53.3 cfs (38,620 acre-ft per year); median of yearly mean discharges, 39 cfs (28,300 acre-ft per year).

EXTREMES.--Current year: Maximum discharge, 4,620 cfs Dec. 26 (gage height, 7.98 ft); no flow for long periods. Period of record: Maximum discharge, 35,200 cfs Dec. 6, 1966 (gage height, 15.27 ft), from rating curve extended above 7,600 cfs on basis of slope-area measurements at gage heights 12.40 and 15.27 ft; no flow for long periods in each year.

REMARKS.--Records good. No regulation or diversion above station.

REVISIONS (WATER YEARS).--WSP 1245: 1951.

DISCHARGE, IN CUBIC FEET PER SECOND, WATER YEAR OCTOBER 1971 TO SEPTEMBER 1972

DAY	OCT	NOV	DEC	JAN	FEB	MAR	APR	MAY	JUN	JUL	AUG	SEP
1			0	28	4.3	4.3	.22					
2			0	22	3.9	4.0	.15					
3			0	17	3.6	3.9	.11					
4			0	14	3.6	3.8	.06					
5			0	12	359	3.6	.06					
6			0	11	200	3.3	.02					
7			0	10	65	3.2	0					
8			0	9.1	38	3.1	0					
9			0	8.4	28	2.5	0					
10			0	7.7	20	2.5	0					
11			0	7.0	17	2.2	0					
12			0	6.6	14	2.1	0					
13			0	6.1	12	1.9	.29					
14			0	6.1	11	1.9	.53					
15			0	5.7	10	1.6	.33					
16			0	5.4	9.0	1.5	.24					
17			0	5.0	8.1	1.4	.19					
18			0	4.7	7.6	1.1	.17					
19			0	4.3	7.1	1.1	.17					
20			0	4.3	7.1	.95	.13					
21			0	3.9	6.6	.91	.11					
22			246	3.9	6.1	.56	.11					
23			82	3.9	6.1	.56	.07					
24			329	3.9	5.7	.50	.06					
25			755	3.6	5.7	.50	.06					
26			488	3.9	5.4	.45	.06					
27			961	5.4	5.0	.45	.02					
28			317	9.5	5.0	.40	0					
29			122	6.6	4.7	.34	0					
30			65	5.7	------	.28	0					
31		------	38	4.3	------	.22	------		------			------
TOTAL	0	0	3,403	249.0	878.6	55.12	3.16	0	0	0	0	0
MEAN	0	0	110	8.03	30.3	1.78	.11	0	0	0	0	0
MAX	0	0	961	28	359	4.3	.53	0	0	0	0	0
MIN	0	0	0	3.6	3.6	.22	0	0	0	0	0	0
AC-FT	0	0	6,750	494	1,740	109	6.3	0	0	0	0	0

CAL YR 1971 TOTAL 5,828.74 MEAN 16.0 MAX 961 MIN 0 AC-FT 11,560
WTR YR 1972 TOTAL 4,588.88 MEAN 12.5 MAX 961 MIN 0 AC-FT 9,100

PEAK DISCHARGE (BASE, 2,500 CFS).--Dec. 26 (2315) 4,620 cfs (7.98 ft).

11143000 BIG SUR RIVER NEAR BIG SUR, CALIF.

LOCATION.--Lat 36°14'45", long 121°46'20", in SW¼SW¼ sec.29, T.19 S., R.2 E., Monterey County, on right bank at downstream side of bridge, 0.4 mile upstream from Post Creek, and 2.6 miles southeast of town of Big Sur.

DRAINAGE AREA.--46.5 sq mi.

PERIOD OF RECORD.--March 1950 to current year. Prior to October 1959, published as Sur River at Big Sur.

GAGE.--Water-stage recorder. Altitude of gage is 400 ft (from topographic map). Prior to Oct. 1, 1951, nonrecording gage at site 0.9 mile downstream at different datum.

AVERAGE DISCHARGE.--22 years, 90.1 cfs (65,280 acre-ft per year); median of yearly mean discharges, 70 cfs (50,700 acre-ft per year).

EXTREMES.--Current year: Maximum discharge, 1,220 cfs Dec. 25 (gage height, 6.23 ft); minimum daily, 5.7 cfs Aug. 31, Sept. 1.
Period of record: Maximum discharge, 5,680 cfs Apr. 2, 1958 (gage height, 11.56 ft); minimum, 3.7 cfs Oct. 7, 1961.

REMARKS.--Records good. No regulation or diversion above station. Records of water temperatures for the current year are published in Part 2 of this report.

REVISIONS (WATER YEARS).--WSP 1445: 1952(P), 1953(M). WSP 1715: 1951, drainage area.

DISCHARGE, IN CUBIC FEET PER SECOND, WATER YEAR OCTOBER 1971 TO SEPTEMBER 1972

DAY	OCT	NOV	DEC	JAN	FEB	MAR	APR	MAY	JUN	JUL	AUG	SEP
1	12	12	17	103	40	36	24	19	12	9.0	6.8	5.7
2	11	12	31	89	39	35	23	19	12	9.8	6.8	6.0
3	11	12	27	81	38	34	23	19	11	11	7.1	6.4
4	11	12	26	73	38	35	23	18	11	10	7.8	7.0
5	10	12	20	67	253	34	24	19	10	10	7.8	7.7
6	11	12	18	62	196	33	27	20	10	9.8	7.4	8.2
7	11	11	17	59	133	33	24	19	10	9.8	7.1	7.4
8	10	10	17	55	105	33	23	20	11	9.0	7.1	7.1
9	10	10	17	53	103	33	23	19	12	8.7	7.3	7.4
10	9.8	10	18	50	87	33	23	18	12	8.8	7.3	7.4
11	9.7	39	19	47	78	32	42	17	11	8.5	7.1	7.8
12	9.0	43	22	45	72	31	39	17	11	8.5	6.8	7.8
13	8.9	30	32	44	67	31	45	16	10	8.2	6.4	7.8
14	9.0	24	24	42	63	30	33	15	9.8	7.8	6.4	7.8
15	8.8	18	21	39	59	29	29	14	9.4	7.8	6.8	7.8
16	10	17	19	39	54	30	26	14	9.0	7.8	7.4	7.8
17	10	16	18	38	51	29	25	14	9.0	8.5	7.8	7.8
18	10	15	18	38	48	28	24	14	8.9	8.5	7.8	8.2
19	9.9	15	17	37	48	28	24	16	9.4	9.0	8.2	8.2
20	9.9	15	17	37	49	28	23	17	9.9	9.4	8.2	8.2
21	9.4	15	18	36	47	28	23	17	10	10	7.8	8.2
22	9.4	15	344	35	49	30	22	16	9.8	10	7.4	7.8
23	9.5	15	139	36	45	30	22	15	11	9.8	7.1	7.8
24	9.9	15	333	34	44	28	23	14	11	9.4	6.8	7.8
25	9.9	15	725	37	42	29	22	14	11	9.0	6.8	7.8
26	10	15	316	38	40	28	21	14	11	8.5	7.1	8.2
27	9.9	15	472	65	38	26	20	13	9.8	8.2	6.8	9.4
28	9.9	21	295	58	38	25	20	13	9.0	8.2	6.8	11
29	11	20	192	47	39	24	19	12	8.5	8.2	6.8	10
30	11	18	147	44	------	24	20	12	8.5	7.4	6.0	9.8
31	12	------	120	42	------	24	------	13	------	7.1	5.7	------
TOTAL	313.9	509	3,516	1,570	2,003	931	759	497	308.0	275.7	220.5	237.3
MEAN	10.1	17.0	113	50.6	69.1	30.0	25.3	16.0	10.3	8.89	7.11	7.91
MAX	12	43	725	103	253	36	45	20	12	11	8.2	11
MIN	8.8	10	17	34	38	24	19	12	8.5	7.1	5.7	5.7
AC-FT	623	1,010	6,970	3,110	3,970	1,850	1,510	986	611	547	437	471

CAL YR 1971 TOTAL 16,181.9 MEAN 44.3 MAX 725 MIN 8.8 AC-FT 32,100
WTR YR 1972 TOTAL 11,140.4 MEAN 30.4 MAX 725 MIN 5.7 AC-FT 22,100

PEAK DISCHARGE (BASE, 700 CFS).--Dec. 25 (0715) 1,220 cfs (6.23 ft).

11143200 CARMEL RIVER AT ROBLES DEL RIO, CALIF.

LOCATION.--Lat 36°28'28", long 121°43'40", in Los Laureles Grant, Monterey County, on downstream side of county road bridge at Robles del Rio, 0.2 mile downstream from Hitchcock Canyon, and 11 miles southeast of town of Carmel.

DRAINAGE AREA.--193 sq mi.

PERIOD OF RECORD.--August 1957 to current year.

GAGE.--Water-stage recorder. Altitude of gage is 270 ft (from topographic map).

AVERAGE DISCHARGE (unadjusted).--15 years, 69.9 cfs (50,640 acre-ft per year).

EXTREMES.--Current year: Maximum discharge, 545 cfs Dec. 27 (gage height, 4.95 ft); no flow for several months.
Period of record: Maximum discharge, 7,100 cfs Apr. 2, 1958 (gage height, 10.50 ft); no flow at times in each year.
Flood of Dec. 23, 1955, reached a stage of 11.7 ft, from floodmarks (discharge, 6,930 cfs by slope-area measurement of peak flow).

REMARKS.--Records good. Flow regulated by Los Padres Reservoir 11 miles upstream (capacity, 3,000 acre-ft) and San Clemente Reservoir 4 miles upstream (capacity, 2,150 acre-ft). Diversion from San Clemente Reservoir for municipal supply amounted to 7,410 acre-ft for the current year.

REVISIONS.--WSP 1715: Drainage area.

DISCHARGE, IN CUBIC FEET PER SECOND, WATER YEAR OCTOBER 1971 TO SEPTEMBER 1972

DAY	OCT	NOV	DEC	JAN	FEB	MAR	APR	MAY	JUN	JUL	AUG	SEP
1			0	80	30	3.1	1.3	.28				
2			0	78	28	2.9	1.3	.20				
3			0	67	28	2.5	1.2	.19				
4			0	61	28	3.4	1.1	.17				
5			0	59	106	4.2	1.2	.17				
6			0	56	182	4.7	1.1	.17				
7			0	53	130	5.0	3.1	.25				
8			0	47	105	4.4	3.3	.28				
9			0	45	93	4.0	3.6	.26				
10			0	43	85	4.0	4.3	.24				
11			0	38	74	4.0	13	.22				
12			0	32	64	4.4	53	.20				
13			0	31	60	4.4	37	.20				
14			0	27	55	5.0	30	.14				
15			0	26	50	11	27	0				
16			0	25	44	6.6	26	0				
17			0	25	40	4.4	13	0				
18			.01	25	37	5.0	11	0				
19			.15	23	32	3.8	8.1	0				
20			.44	22	31	3.8	5.0	0				
21			.60	22	32	8.6	4.5	0				
22			2.5	21	38	4.2	2.7	0				
23			14	21	44	3.4	2.1	0				
24			24	20	46	2.4	2.2	0				
25			95	21	4.7	2.4	1.9	0				
26			74	28	3.1	2.4	1.8	0				
27			287	38	4.2	2.4	.99	0				
28			251	48	4.2	2.1	.67	0				
29			161	41	3.1	2.1	.55	0				
30			118	38	------	1.8	.41	0				
31		------	95	35	------	1.5	------	0	------			------
TOTAL	0	0	1,122.70	1,196	1,481.3	123.9	262.42	2.97	0	0	0	0
MEAN	0	0	36.2	38.6	51.1	4.00	8.75	.096	0	0	0	0
MAX	0	0	287	80	182	11	53	.28	0	0	0	0
MIN	0	0	0	20	3.1	1.5	.41	0	0	0	0	0
AC-FT	0	0	2,230	2,370	2,940	246	521	5.9	0	0	0	0

CAL YR 1971 TOTAL 8,854.49 MEAN 24.3 MAX 287 MIN 0 AC-FT 17,560
WTR YR 1972 TOTAL 4,189.29 MEAN 11.4 MAX 287 MIN 0 AC-FT 8,310

PEAK DISCHARGE (BASE, 1,000 CFS).--No peak above base.

11143250 CARMEL RIVER NEAR CARMEL, CALIF.

LOCATION.--Lat 36°32'20", long 121°52'25", in Canada de la Segunda Grant, Monterey County, on right bank 0.3 mile downstream from Potrero Canyon, and 3 miles east of Carmel.

DRAINAGE AREA.--246 sq mi.

PERIOD OF RECORD.--August 1962 to current year.

GAGE.--Water-stage recorder. Altitude of gage is 45 ft (from topographic map).

AVERAGE DISCHARGE (unadjusted).--10 years, 88.1 cfs (63,830 acre-ft per year).

EXTREMES.--Current year: Maximum discharge, 238 cfs Dec. 27 (gage height, 4.48 ft); no flow for several months. Period of record: Maximum discharge, 8,620 cfs Jan. 26, 1969 (gage height, 17.30 ft in gage well, 17.4 ft, from floodmarks); no flow at times in each year.

REMARKS.--Records good. Flow regulated by Los Padres Reservoir (capacity, 3,000 acre-ft) and San Clemente Reservoir (capacity, 2,150 acre-ft). Diversion from San Clemente Reservoir for municipal supply amounted to 7,410 acre-ft for the current year.

REVISIONS (WATER YEARS).--WRD Calif. 1969: 1967(M).

DISCHARGE, IN CUBIC FEET PER SECOND, WATER YEAR OCTOBER 1971 TO SEPTEMBER 1972

DAY	OCT	NOV	DEC	JAN	FEB	MAR	APR	MAY	JUN	JUL	AUG	SEP
1			0	65	31	9.5	.98	.02				
2			0	54	27	9.0	1.2	.02				
3			0	52	27	7.8	1.4	.02				
4			0	45	26	6.9	1.4	.02				
5			0	37	65	5.4	2.0	.02				
6			0	37	196	3.2	1.7	.03				
7			0	36	168	2.4	2.0	.03				
8			0	32	142	1.4	.98	.03				
9			0	32	131	.98	.44	.02				
10			0	31	116	.98	.44	.02				
11			0	30	98	.69	.34	.02				
12			0	22	84	.69	.29	.02				
13			0	24	74	.98	8.4	.02				
14			0	27	68	.58	9.0	.02				
15			0	25	57	.51	8.4	.01				
16			0	24	55	.34	7.4	.01				
17			0	23	54	.34	6.4	.04				
18			0	23	50	.34	4.0	.03				
19			0	20	45	.21	2.4	.03				
20			0	17	42	.21	1.2	.04				
21			0	17	39	.21	.81	.03				
22			0	17	37	.39	.69	.03				
23			0	16	39	.98	.39	.03				
24			0	16	48	2.0	.34	.02				
25			0	16	31	3.2	.18	.02				
26			0	23	17	2.4	.13	.01				
27			86	36	13	1.7	.09	.01				
28			208	57	11	1.2	.04	0				
29			147	45	9.5	1.2	.03	0				
30			103	40	------	1.2	.04	0				
31		------	80	36	------	.81	------	0	------			------
TOTAL	0	0	624	975	1,800.5	67.74	63.11	.62	0	0	0	0
MEAN	0	0	20.1	31.5	62.1	2.19	2.10	.020	0	0	0	0
MAX	0	0	208	65	196	9.5	9.0	.04	0	0	0	0
MIN	0	0	0	16	9.5	.21	.03	0	0	0	0	0
AC-FT	0	0	1,240	1,930	3,570	134	125	1.2	0	0	0	0

CAL YR 1971 TOTAL 9,652.05 MEAN 26.4 MAX 208 MIN 0 AC-FT 19,140
WTR YR 1972 TOTAL 3,530.97 MEAN 9.65 MAX 208 MIN 0 AC-FT 7,000

PEAK DISCHARGE (BASE, 1,200 CFS).--No peak above base.

11143300 ARROYO DEL REY AT DEL REY OAKS, CALIF.

LOCATION.--Lat 36°35'47", long 121°50'50", in Noche Buena Grant, Monterey County, on right bank at culvert on Rosita Avenue, at Del Rey Oaks and 1,000 ft upstream from State Highway 1.

DRAINAGE AREA.--14.3 sq mi.

PERIOD OF RECORD.--October 1966 to current year.

GAGE.--Water-stage recorder and concrete control. Altitude of gage is 15 ft (from topographic map).

AVERAGE DISCHARGE.--6 years, 0.58 cfs (420 acre-ft per year).

EXTREMES.--Current year: Maximum discharge, 5.9 cfs Jan. 27 (gage height, 2.12 ft); minimum daily, 0.01 cfs July 16-18.
Period of record: Maximum discharge, 60 cfs Feb. 24, 1969 (gage height, 4.14 ft), from rating curve extended above 26 cfs; no flow at times.

REMARKS.--Records poor. No regulation or diversion above station.

REVISIONS (WATER YEARS).--WRD Calif. 1971: 1967.

DISCHARGE, IN CUBIC FEET PER SECOND, WATER YEAR OCTOBER 1971 TO SEPTEMBER 1972

DAY	OCT	NOV	DEC	JAN	FEB	MAR	APR	MAY	JUN	JUL	AUG	SEP
1	.08	.07	.07	.26	.23	.06	.04	.03	.02	.02	.18	.04
2	.08	.07	.29	.26	.23	.08	.04	.03	.02	.02	.36	.04
3	.08	.07	.20	.23	.20	.08	.04	.03	.02	.02	.52	.04
4	.08	.07	.11	.20	.26	.08	.04	.03	.02	.02	.48	.04
5	.07	.07	.09	.20	.66	.08	.07	.03	.02	.02	.40	.04
6	.08	.07	.09	.18	.32	.07	.05	.03	.02	.02	.54	.04
7	.08	.07	.09	.18	.26	.07	.04	.03	.02	.02	.40	.04
8	.07	.07	.09	.18	.23	.07	.04	.03	.02	.02	.20	.04
9	.07	.07	.09	.16	.21	.08	.04	.03	.06	.02	.14	.04
10	.08	.06	.09	.16	.19	.07	.04	.02	.03	.02	.04	.04
11	.07	.09	.09	.16	.16	.07	.04	.03	.02	.02	.04	.04
12	.07	.29	.09	.16	.16	.07	.08	.02	.04	.02	.04	.04
13	.06	.14	.09	.18	.15	.07	.05	.02	.04	.02	.04	.04
14	.06	.07	.08	.18	.14	.07	.04	.03	.04	.02	.04	.05
15	.06	.07	.08	.16	.14	.07	.04	.03	.03	.02	.04	.05
16	.07	.06	.07	.11	.14	.07	.04	.03	.03	.01	.04	.04
17	.06	.06	.07	.11	.13	.07	.04	.03	.04	.01	.04	.04
18	.06	.06	.07	.09	.12	.06	.03	.02	.03	.01	.04	.04
19	.06	.06	.07	.09	.11	.06	.03	.09	.03	.03	.04	.04
20	.06	.05	.07	.09	.11	.05	.03	.03	.03	.02	.04	.04
21	.06	.05	.13	.09	.11	.05	.03	.03	.06	.02	.04	.04
22	.06	.05	.23	.09	.11	.05	.04	.02	.05	.02	.04	.04
23	.06	.05	.11	.11	.09	.05	.04	.02	.03	.02	.04	.05
24	.07	.05	.14	.09	.09	.04	.03	.03	.03	.02	.04	.06
25	.05	.05	1.4	.11	.09	.05	.03	.02	.02	.02	.04	.06
26	.05	.05	.97	.11	.09	.04	.03	.03	.02	.02	.04	.06
27	.06	.05	1.7	1.1	.07	.05	.03	.02	.02	.03	.04	.06
28	.06	.20	.48	.36	.05	.05	.03	.02	.02	.04	.04	.06
29	.05	.07	.40	.29	.04	.04	.03	.02	.02	.05	.03	.06
30	.07	.07	.36	.26	------	.04	.03	.02	.02	.05	.03	.06
31	.07	------	.29	.26	------	.04	------	.02	------	.13	.04	------
TOTAL	2.06	2.33	8.20	6.21	4.89	1.90	1.18	.87	.87	.80	4.08	1.37
MEAN	.067	.078	.26	.20	.17	.061	.039	.028	.029	.026	.13	.046
MAX	.08	.29	1.7	1.1	.66	.08	.08	.09	.06	.13	.54	.06
MIN	.05	.05	.07	.09	.04	.04	.03	.02	.02	.01	.03	.04
AC-FT	4.1	4.6	16	12	9.7	3.8	2.3	1.7	1.7	1.6	8.1	2.7

CAL YR 1971 TOTAL 66.26 MEAN .18 MAX 4.3 MIN .04 AC-FT 131
WTR YR 1972 TOTAL 34.76 MEAN .095 MAX 1.7 MIN .01 AC-FT 69

PEAK DISCHARGE (BASE, 5.0 CFS).--Jan. 27 (0815) 5.9 cfs (2.12 ft).

11143500 SALINAS RIVER NEAR POZO, CALIF.

LOCATION.--Lat 35°17'55", long 120°24'10", in NE¼ sec.19, T.30 S., R.15 E., San Luis Obispo County, on right bank at downstream side of county road bridge, 1.0 mile downstream from Pozo Creek, 1.6 miles west of Pozo, and 7.4 miles upstream from Salinas Dam.

DRAINAGE AREA.--70.3 sq mi.

PERIOD OF RECORD.--July 1942 to current year.

GAGE.--Water-stage recorder. Datum of gage is 1,347.78 ft above mean sea level. Prior to May 13, 1969, water-stage recorder at site 0.4 mile downstream at same datum. May 13 to July 28, 1969, nonrecording gage at bridge at datum 4.56 ft higher.

AVERAGE DISCHARGE.--30 years, 17.1 cfs (12,390 acre-ft per year); median of yearly mean discharges, 6.5 cfs (4,700 acre-ft per year).

EXTREMES.--Current year: Maximum discharge, 325 cfs Dec. 27 (gage height, 12.13 ft); no flow July 28 to Sept. 4.
Period of record: Maximum discharge, 18,600 cfs Jan. 25, 1969 (gage height, 13.90 ft in gage well, 15.5 ft, site then in use, from floodmarks), from rating curve extended above 7,100 cfs on basis of slope-area measurement of maximum flow; no flow at times.

REMARKS.--Records good except those for period of no gage-height record, which are poor. No regulation or diversion above station. Water is stored in Santa Margarita Lake below station. Records of chemical analyses for the current year are published in Part 2 of this report.

REVISIONS (WATER YEARS).--WSP 1565: 1943(M).

DISCHARGE, IN CUBIC FEET PER SECOND, WATER YEAR OCTOBER 1971 TO SEPTEMBER 1972

DAY	OCT	NOV	DEC	JAN	FEB	MAR	APR	MAY	JUN	JUL	AUG	SEP
1	.65	1.1	.98	3.2	2.4	2.2	1.9	1.6	1.0	.40		0
2	.80	1.1	1.6	3.0	2.4	2.2	1.9	1.6	1.0	.40		0
3	.65	.98	1.2	2.8	2.3	2.2	1.9	1.6	.90	.40		0
4	.58	1.1	.98	2.7	2.3	2.2	1.9	1.6	.90	.30		0
5	.46	1.1	.89	2.7	4.0	2.2	1.9	1.6	.90	.30		.07
6	.41	1.1	.89	2.6	3.0	2.1	1.9	1.5	.80	.30		.07
7	.36	1.4	.98	2.6	2.6	2.1	1.9	1.5	.80	.30		.04
8	.36	2.2	.98	2.6	2.4	2.1	1.9	1.5	.80	.30		.04
9	.31	2.2	1.1	2.6	2.4	2.1	1.9	1.5	.80	.30		.02
10	.31	2.2	.89	2.5	2.4	2.1	1.9	1.5	.70	.30		.07
11	.27	3.9	.89	2.5	2.4	2.1	1.9	1.5	.70	.30		.12
12	.31	4.2	.89	2.5	2.4	2.1	1.9	1.5	.70	.30		.11
13	.31	2.4	.89	2.5	2.3	2.1	1.9	1.5	.70	.30		.08
14	.31	2.2	.80	2.5	2.3	2.1	1.8	1.5	.60	.30		.06
15	.52	2.0	.80	2.5	2.3	2.1	1.8	1.5	.60	.30		.03
16	.72	2.0	.65	2.4	2.3	2.1	1.8	1.4	.60	.30		.03
17	.89	1.9	.65	2.4	2.3	2.1	1.8	1.4	.60	.30		.04
18	.89	1.9	.65	2.4	2.3	2.1	1.8	1.4	.60	.30		.06
19	.89	1.9	.65	2.4	2.3	2.1	1.8	1.4	.60	.30		.10
20	.89	1.9	.58	2.4	2.3	2.1	1.8	1.4	.60	.30		.08
21	.89	1.7	.58	2.3	2.2	2.0	1.7	1.3	.50	.30		.05
22	.89	1.7	7.3	2.3	2.2	2.0	1.7	1.3	.50	.30		.03
23	.89	1.6	1.9	2.3	2.2	2.0	1.7	1.3	.50	.20		.01
24	.89	1.7	3.2	2.3	2.2	2.0	1.7	1.3	.50	.20		.01
25	.89	1.4	9.0	2.3	2.2	2.0	1.7	1.2	.50	.20		.03
26	.89	1.4	9.0	2.3	2.2	2.0	1.7	1.2	.50	.20		.04
27	.89	1.3	61	6.0	2.2	2.0	1.7	1.2	.50	.20		.10
28	.98	1.4	12	3.5	2.2	2.0	1.6	1.1	.50	0		.10
29	.98	1.3	5.3	2.7	2.2	2.0	1.6	1.1	.50	0		.11
30	1.1	1.2	4.0	2.5	------	2.0	1.6	1.1	.40	0		.09
31	1.1	------	3.5	2.4	------	2.0	------	1.0	------	0		------
TOTAL	21.28	53.48	134.72	82.7	69.2	64.5	54.0	43.1	19.80	7.90	0	1.59
MEAN	.69	1.78	4.35	2.67	2.39	2.08	1.80	1.39	.66	.25	0	.053
MAX	1.1	4.2	61	6.0	4.0	2.2	1.9	1.6	1.0	.40	0	.12
MIN	.27	.98	.58	2.3	2.2	2.0	1.6	1.0	.40	0	0	0
AC-FT	42	106	267	164	137	128	107	85	39	16	0	3.2

CAL YR 1971 TOTAL 1,616.50 MEAN 4.43 MAX 241 MIN .02 AC-FT 3,210
WTR YR 1972 TOTAL 552.27 MEAN 1.51 MAX 61 MIN 0 AC-FT 1,100

PEAK DISCHARGE (BASE, 300 CFS).--Dec. 27 (0115) 325 cfs (12.13 ft).

NOTE.--No gage-height record Dec. 29 to Sept. 1.

11144000 TORO CREEK NEAR POZO, CALIF.

LOCATION.--Lat 35°19'26", long 120°25'13", in SE¼ sec.12, T.30 S., R.14 E., San Luis Obispo County, on left bank 300 ft upstream from mouth, and 3 miles northwest of Pozo.

DRAINAGE AREA.--9.56 sq mi.

PERIOD OF RECORD.--June 1942 to September 1969, October 1971 to current year. Prior to October 1961 low-water records only. Monthly discharge only for some periods, published in WSP 1315-B.

GAGE.--Water-stage recorder and concrete control. Datum of gage is 1,312.99 ft above mean sea level. Prior to Dec. 8, 1961, at site 250 ft downstream at datum 11.83 ft lower.

AVERAGE DISCHARGE.--9 years (1961-69, 1970-71), 0.85 cfs (616 acre-ft per year).

EXTREMES.--Current year: Maximum discharge, 15 cfs probably occurred Dec. 27 (gage height, unknown); minimum daily, 0.01 cfs Sept. 21-24, 26, 28-30.
Period of record: Maximum discharge, 2,400 cfs Feb. 24, 1969 (gage height, 8.3 ft, from floodmarks), from rating curve extended above 30 cfs on basis of slope-area measurements at gage heights 5.11 and 7.3 ft; no flow at times.

REMARKS.--Records poor. Small diversions above station for irrigation and stock reservoir.

DISCHARGE, IN CUBIC FEET PER SECOND, WATER YEAR OCTOBER 1971 TO SEPTEMBER 1972

DAY	OCT	NOV	DEC	JAN	FEB	MAR	APR	MAY	JUN	JUL	AUG	SEP
1	.40	.39	.64	.70	.82	.40	.30	.37	.35	.03	.12	.06
2	.40	.40	.64	.70	.82	.40	.30	.30	.48	.04	.06	.08
3	.40	.40	.64	.70	.82	.58	.32	.30	.30	.04	.02	.04
4	.40	.44	.58	.70	.82	.58	.32	.32	.23	.04	.02	.04
5	.40	.40	.51	.70	.82	.58	.32	.35	.23	.03	.02	.06
6	.35	.48	.48	.70	.82	.58	.72	.35	.16	.03	.03	.06
7	.37	.55	.44	.70	.82	.58	.58	.35	.19	.03	.03	.03
8	.37	.64	.24	.70	.82	.58	.24	.40	.18	.04	.03	.03
9	.37	.58	.23	.70	.82	.58	.26	.48	.16	.05	.03	.03
10	.37	.48	.23	.70	.82	.58	.37	.51	.11	.07	.03	.02
11	.40	.85	.23	.72	.82	.58	.55	.51	.06	.06	.03	.02
12	.37	.91	.24	.82	.82	.51	.55	.48	.08	.06	.03	.02
13	.37	.44	.26	.82	.69	.55	.55	.44	.08	.06	.03	.06
14	.35	.40	.28	.82	.89	.55	.55	.40	.07	.04	.03	.04
15	.40	.40	.28	.82	.69	.55	.51	.40	.07	.04	.03	.03
16	.40	.40	.30	.76	.89	.48	.30	.44	.06	.06	.03	.04
17	.40	.40	.30	.76	.76	.72	.37	.44	.07	.12	.03	.04
18	.40	.37	.30	.76	.76	.58	.51	.37	.09	.12	.03	.02
19	.40	.35	.30	.76	.76	.40	.58	.68	.10	.06	.03	.02
20	.37	.37	.30	.76	.76	.51	.55	.64	.09	.05	.03	.02
21	.35	.35	.32	.76	.72	.44	.48	.64	.10	.04	.03	.01
22	.37	.37	.72	.76	.76	.44	.48	.51	.08	.04	.03	.01
23	.44	.40	1.4	.76	.72	.44	.51	.51	.10	.03	.03	.01
24	.44	.44	1.4	.82	.68	.44	.51	.48	.10	.03	.03	.01
25	.44	.44	2.0	.82	.68	.31	.51	.44	.08	.03	.03	.02
26	.40	.44	3.0	.82	.68	.32	.48	.44	.07	.03	.03	.01
27	.40	.44	4.7	.82	.55	.32	.48	.40	.06	.08	.03	.03
28	.40	.68	3.2	.82	.58	.32	.48	.32	.06	.02	.03	.01
29	.40	.94	1.8	.82	.58	.30	.44	.35	.06	.03	.03	.01
30	.40	.72	1.0	.82	------	.30	.37	.37	.04	.06	.03	.01
31	.40	------	.72	.82	------	.35	------	.35	------	.06	.03	------
TOTAL	12.13	14.87	27.68	23.64	22.39	14.85	13.49	13.34	3.91	1.52	1.02	.89
MEAN	.39	.50	.89	.76	.77	.48	.45	.43	.13	.049	.033	.030
MAX	.44	.94	4.7	.82	.89	.72	.72	.68	.48	.12	.12	.08
MIN	.35	.35	.23	.70	.55	.30	.24	.30	.04	.02	.02	.01
AC-FT	24	29	55	47	44	29	27	26	7.8	3.0	2.0	1.8

WTR YR 1972 TOTAL 149.73 MEAN .41 MAX 4.7 MIN .01 AC-FT 297

PEAK DISCHARGE (BASE, 15 CFS).--Probably occurred Dec. 27 (time unknown) 15 cfs.

11144200 SALSIPUEDES CREEK NEAR POZO, CALIF.

LOCATION.--Lat 35°17'34", long 120°27'07", in NW¼SW¼ sec.23, T.30 S., R.14 E., San Luis Obispo County, on left bank 1.9 miles upstream from mouth, and 4.4 miles west of Pozo.

DRAINAGE AREA.--5.91 sq mi.

PERIOD OF RECORD.--October 1969 to current year.

GAGE.--Water-stage recorder and concrete control. Altitude of gage is 1,480 ft (from topographic map).

EXTREMES.--Current year: Maximum discharge, 394 cfs Dec. 27 (gage height, 3.41 ft), from rating curve extended as explained below; no flow for long periods.
Period of record: Maximum discharge, 394 cfs Dec. 27, 1971 (gage height, 3.41 ft), from rating curve extended above 37 cfs on basis of slope-area measurement at 4.58 ft; no flow for long periods in each year.
REVISIONS.--Figures of maximum discharge for the water years 1970 and 1971 have been revised to 192 cfs Mar. 4, 1970 (gage height, 2.73 ft) and 173 cfs Dec. 21, 1970 (gage height, 2.64 ft), superseding figures published in WRD Calif. 1970 and 1971.

REMARKS.--Records good. No regulation or diversion above station.

REVISED PEAK DISCHARGE.--1970: Jan. 9 (time unknown) 98 cfs (2.19 ft); Jan. 16 (time unknown) 114 cfs (2.30 ft); Mar. 1 (1330) 128 cfs (2.39 ft); Mar. 4 (1530) 192 cfs (2.73 ft).
1971: Dec. 21 (time unknown) 173 cfs (2.64 ft); Jan. 13 (0430) 105 cfs (2.24 ft).

DISCHARGE, IN CUBIC FEET PER SECOND, WATER YEAR OCTOBER 1971 TO SEPTEMBER 1972

DAY	OCT	NOV	DEC	JAN	FEB	MAR	APR	MAY	JUN	JUL	AUG	SEP
1			0	.36	.15	.03	.01	.02				
2			0	.27	.11	.03	.01	.02				
3			0	.21	.10	.04	.01	.02				
4			0	.15	.11	.04	.01	.02				
5			0	.13	3.2	.03	.01	.02				
6			0	.13	2.1	.03	.01	.02				
7			0	.12	.94	.03	.01	.02				
8			0	.09	.68	.03	.01	.01				
9			0	.07	.53	.03	.01	.01				
10			0	.06	.39	.02	.01	.01				
11			0	.06	.31	.02	.02	.01				
12			0	.05	.26	.02	.02	.01				
13			0	.05	.19	.02	.02	.01				
14			0	.05	.17	.02	.02	.01				
15			0	.05	.14	.02	.02	.01				
16			0	.04	.13	.02	.02	.01				
17			0	.04	.10	.02	.02	.01				
18			0	.04	.10	.02	.02	.01				
19			0	.04	.08	.02	.02	.01				
20			0	.04	.06	.02	.01	.01				
21			0	.04	.05	.02	.02	.01				
22			.84	.04	.05	.02	.01	.01				
23			.31	.03	.05	.02	.01	.01				
24			2.1	.03	.05	.02	.01	.01				
25			9.7	.03	.05	.02	.01	.01				
26			10	.04	.05	.02	.01	0				
27			70	.29	.04	.02	.02	0				
28			8.3	.86	.04	.01	.02	0				
29			2.0	.35	.03	.01	.02	0				
30			.87	.23	------	.01	.02	0				
31		------	.51	.18	------	.01	------	0	------			------
TOTAL	0	0	104.63	4.17	10.26	.69	.44	.32	0	0	0	0
MEAN	0	0	3.38	.13	.35	.022	.015	.010	0	0	0	0
MAX	0	0	70	.86	3.2	.04	.02	.02	0	0	0	0
MIN	0	0	0	.03	.03	.01	.01	0	0	0	0	0
AC-FT	0	0	208	8.3	20	1.4	.9	.6	0	0	0	0

CAL YR 1971 TOTAL 250.36 MEAN .69 MAX 70 MIN 0 AC-FT 497
WTR YR 1972 TOTAL 120.51 MEAN .33 MAX 70 MIN 0 AC-FT 239

PEAK DISCHARGE (BASE, 25 CFS).--Dec. 27 (0115) 394 cfs (3.41 ft).

11144500 SANTA MARGARITA LAKE NEAR POZO, CALIF.

LOCATION.--Lat 35°20'14", long 120°30'08", in NW¼NW¼ sec.8, T.30 S., R.14 E.; San Luis Obispo County, at left end of dam on Salinas River, 2 miles upstream from Pilitas Creek, and 7.5 miles northwest of Pozo.

DRAINAGE AREA.--112 sq mi.

PERIOD OF RECORD.--December 1941 to current year. Prior to October 1967, published as Salinas Reservoir near Pozo.

GAGE.--Water-stage recorder. Datum of gage is at mean sea level (levels by Corps of Engineers). Prior to Mar. 9, 1942, nonrecording gage at same site and datum.

EXTREMES.--Current year: Maximum contents, 18,900 acre-ft Jan. 1-10; maximum elevation, 1,290.96 ft Jan. 3; minimum contents, 11,900 acre-ft Sept. 28-30.
Period of record: Maximum contents, 37,000 acre-ft Jan. 25, 1969 (elevation, 1,313.30 ft); minimum, 1,730 acre-ft Nov. 6-10, 1943.

REMARKS.--Reservoir is formed by concrete-arch dam, outlet closed Dec. 6, 1941. Usable capacity, 26,000 acre-ft between elevations 1,220.3 (bottom of outlet pipe) and 1,301.0 ft (spillway crest) above mean sea level. Water diverted at dam into pipeline to small reservoir 10 miles below, from which it is pumped to Camp San Luis Obispo and city of San Luis Obispo for water supply; water is also released down natural channel of river. Figures given herein represent usable contents.

REVISIONS.--WSP 1715: Drainage area.

CAPACITY TABLE (ELEVATION, IN FEET, AND CONTENTS, IN ACRE-FEET)

1,220.3	0	1,245	2,100	1,270	8,650	1,295	21,700
1,225	210	1,250	3,000	1,275	10,600	1,300	25,200
1,230	510	1,255	4,100	1,280	12,800	1,310	33,700
1,235	880	1,260	5,400	1,285	15,300	1,320	44,400
1,240	1,400	1,265	6,900	1,290	18,300	1,325	50,400

CONTENTS, IN ACRE-FEET, AT 2400, WATER YEAR OCTOBER 1971 TO SEPTEMBER 1972

DAY	OCT	NOV	DEC	JAN	FEB	MAR	APR	MAY	JUN	JUL	AUG	SEP
1	18,800	18,000	17,700	18,900	18,800	18,700	18,200	17,700	16,700	14,500	13,500	12,600
2	18,700	18,000	17,700	18,900	18,800	18,700	18,200	17,600	16,700	14,500	13,500	12,600
3	18,700	18,000	17,700	18,900	18,800	18,700	18,200	17,600	16,600	14,500	13,500	12,600
4	18,700	17,900	17,700	18,900	18,800	18,700	18,200	17,600	16,600	14,400	13,400	12,500
5	18,700	17,900	17,700	18,900	18,800	18,700	18,200	17,500	16,600	14,400	13,400	12,500
6	18,600	17,900	17,700	18,900	18,800	18,700	18,200	17,500	16,500	14,400	13,400	12,500
7	18,600	17,900	17,800	18,900	18,800	18,700	18,100	17,500	16,500	14,300	13,400	12,500
8	18,600	17,900	17,800	18,900	18,800	18,600	18,100	17,400	16,500	14,300	13,300	12,500
9	18,500	17,800	17,800	18,900	18,800	18,600	18,100	17,400	16,400	14,300	13,300	12,400
10	18,500	17,800	17,800	18,900	18,800	18,600	18,100	17,400	16,400	14,300	13,300	12,400
11	18,500	17,900	17,800	18,800	18,800	18,600	18,100	17,400	16,400	14,200	13,200	12,400
12	18,500	17,900	17,800	18,800	18,800	18,600	18,100	17,300	16,300	14,200	13,200	12,400
13	18,400	17,900	17,700	18,800	18,800	18,600	18,000	17,300	16,300	14,200	13,200	12,300
14	18,400	17,900	17,700	18,800	18,800	18,500	18,000	17,300	16,300	14,100	13,100	12,300
15	18,400	17,900	17,700	18,800	18,800	18,500	18,000	17,200	16,200	14,100	13,100	12,300
16	18,400	17,900	17,700	18,800	18,800	18,500	18,000	17,200	16,200	14,100	13,100	12,300
17	18,300	17,900	17,700	18,800	18,800	18,500	18,000	17,200	16,100	14,000	13,000	12,200
18	18,300	17,800	17,700	18,800	18,800	18,500	18,000	17,100	16,100	14,000	13,000	12,200
19	18,300	17,800	17,700	18,800	18,800	18,500	18,000	17,100	16,100	14,000	13,000	12,200
20	18,300	17,800	17,700	18,800	18,800	18,500	17,900	17,100	16,000	13,900	13,000	12,200
21	18,300	17,800	17,700	18,800	18,800	18,400	17,900	17,100	16,000	13,900	12,900	12,100
22	18,200	17,800	17,700	18,800	18,800	18,400	17,900	17,000	15,900	13,900	12,900	12,100
23	18,200	17,800	17,700	18,800	18,800	18,400	17,900	17,000	15,900	13,800	12,900	12,100
24	18,200	17,800	17,700	18,700	18,800	18,400	17,800	17,000	15,900	13,800	12,800	12,100
25	18,200	17,800	17,700	18,700	18,700	18,400	17,800	16,900	15,800	13,800	12,800	12,000
26	18,100	17,800	17,700	18,700	18,700	18,300	17,800	16,900	15,800	13,700	12,800	12,000
27	18,100	17,700	18,600	18,800	18,700	18,300	17,800	16,900	15,800	13,700	12,800	12,000
28	18,100	17,700	18,600	18,800	18,700	18,300	17,800	16,800	15,700	13,700	12,700	11,900
29	18,100	17,700	18,600	18,800	18,700	18,300	17,700	16,800	15,700	13,600	12,700	11,900
30	18,000	17,700	18,600	18,800	------	18,300	17,700	16,800	15,000	13,600	12,700	11,900
31	18,000	------	18,600	18,800	------	18,200	------	16,700	------	13,600	12,600	------
MAX	18,800	18,000	18,600	18,900	18,800	18,700	18,200	17,700	16,700	14,500	13,500	12,600
MIN	18,000	17,700	17,700	18,700	18,700	18,200	17,700	16,700	15,000	13,600	12,600	11,900
(a)	1,289.53	1,289.04	1,290.89	1,290.84	1,290.70	1,289.90	1,288.96	1,287.41	1,284.35	1,281.56	1,279.54	1,277.90
(b)	-800	-300	+900	+200	-100	-500	-500	-1,000	-1,700	-1,400	-1,000	-700
(c)	449	345	296	326	322	467	468	556	562	612	609	502

CAL YR 1971 b -3,000 c 5,150
WTR YR 1972 b -6,900 c 5,510

a Elevation, in feet, at end of month.
b Change in contents, in acre-feet.
c Diversion, in acre-feet, for municipal supply; furnished by county of San Luis Obispo.

11145000 SALINAS RIVER ABOVE PILITAS CREEK, NEAR SANTA MARGARITA, CALIF.

LOCATION.--Lat 35°20'56", long 120°30'42", in SW¼NE¼ sec.6, T.30 S., R.14 E., San Luis Obispo County, on downstream side of right bank bridge pier, 200 ft upstream from Pilitas Creek, 2 miles downstream from Salinas Dam, and 6 miles southeast of Santa Margarita.

DRAINAGE AREA.--114 sq mi.

PERIOD OF RECORD.--July 1942 to current year.

GAGE.--Water-stage recorder and concrete control. Datum of gage is 1,148.66 ft above mean sea level.

AVERAGE DISCHARGE.--30 years, 18.0 cfs (13,040 acre-ft per year).

EXTREMES.--Current year: Maximum discharge, 335 cfs June 29 (gage height, 2.38 ft); no flow for many days.
Period of record: Maximum discharge, 16,600 cfs Jan. 25, 1969 (gage height, 14.90 ft); no flow at times.

REMARKS.--Records good. Flow regulated by Santa Margarita Lake 2 miles upstream beginning in 1941 and water diverted to Camp San Luis Obispo and city of San Luis Obispo (see sta 11144500). Records of chemical analyses for the current year are published in Part 2 of this report.

REVISIONS.--WSP 1715: Drainage area.

DISCHARGE, IN CUBIC FEET PER SECOND, WATER YEAR OCTOBER 1971 TO SEPTEMBER 1972

DAY	OCT	NOV	DEC	JAN	FEB	MAR	APR	MAY	JUN	JUL	AUG	SEP
1	.24	.80	.09	.55	.22	.12	.01	0	1.4	2.7	.07	
2	.24	.55	.09	.55	.22	.12	.03	0	1.3	.80	.05	
3	.24	.29	.09	.41	.22	.12	.03	0	1.2	.70	.03	
4	.24	.23	.09	.41	.22	.12	0	.01	1.2	.70	.02	
5	.24	.17	.09	.35	.22	.13	0	.01	1.2	.62	.01	
6	.39	.12	.09	.29	.22	.15	.01	0	1.2	.62	0	
7	.71	.09	.07	.29	.22	.11	.01	.70	1.6	.41	0	
8	.82	.09	.04	.29	.22	.07	.01	1.6	1.5	.12	0	
9	.95	.09	.04	.23	.22	.07	.01	1.6	1.2	.12	0	
10	.95	.09	.04	.23	.21	.12	.01	1.6	1.2	.07	0	
11	.95	.09	.07	.23	.17	.18	.02	1.6	1.2	.12	0	
12	.95	.09	.17	.23	.17	.08	.02	1.6	1.2	.07	0	
13	.95	.09	.23	.23	.17	.05	.01	1.6	1.2	.04	0	
14	.95	.09	.17	.23	.17	.05	0	1.6	1.2	.48	0	
15	.95	.09	.23	.23	.17	.06	.01	2.1	1.2	.04	0	
16	.95	.09	.23	.23	.17	.07	.01	1.8	.99	.01	0	
17	.95	.09	.23	.23	.17	.04	.01	1.8	1.1	.01	0	
18	.95	.09	.23	.23	.19	.04	.01	1.7	1.1	.04	0	
19	.95	.09	.23	.23	.17	.02	.02	1.7	1.2	.07	0	
20	.95	.09	.23	.23	.17	.03	.02	1.7	1.1	.17	0	
21	1.0	.09	.23	.23	.21	.04	.03	1.7	1.0	.29	0	
22	1.0	.09	1.2	.23	.23	.03	.02	1.7	1.1	.29	0	
23	1.0	.09	1.5	.23	.29	.02	.03	1.7	1.0	.23	0	
24	1.0	.09	1.5	.23	.17	.02	.05	1.7	1.0	.17	0	
25	1.2	.09	2.7	.23	.17	.02	.03	1.7	.90	.29	0	
26	.90	.09	3.0	.23	.17	.02	.02	1.7	.90	.23	0	
27	.90	.09	9.7	.22	.15	.01	.02	1.7	.90	.17	0	
28	.90	.09	2.5	.22	.15	.02	.02	1.7	.90	.22	0	
29	.90	.09	1.5	.22	.14	.02	0	1.7	197	.17	0	
30	1.0	.09	.90	.22	------	.01	0	1.7	299	.16	0	
31	1.0	------	.70	.22	------	.01	------	1.4	------	.12	0	------
TOTAL	25.32	4.32	28.18	8.38	5.59	1.97	.47	41.12	528.19	10.25	.18	0
MEAN	.82	.14	.91	.27	.19	.064	.016	1.33	17.6	.33	.006	0
MAX	1.2	.80	9.7	.55	.29	.18	.05	2.1	299	2.7	.07	0
MIN	.24	.09	.04	.22	.14	.01	0	0	.90	.01	0	0
AC-FT	50	8.6	56	17	11	3.9	.9	82	1,050	20	.4	0

CAL YR 1971 TOTAL 130.42 MEAN .36 MAX 9 MIN 0 AC-FT 259
WTR YR 1972 TOTAL 653.97 MEAN 1.79 MAX 299 MIN 0 AC-FT 1,300

11147000 JACK CREEK NEAR TEMPLETON, CALIF.

LOCATION.--Lat 35°34'00", long 120°48'10", in Paso de Robles Grant, San Luis Obispo County, on left bank 1.4 miles upstream from mouth, 1.8 miles northwest of Oakdale School, and 5.6 miles west of Templeton.

DRAINAGE AREA.--25.3 sq mi.

PERIOD OF RECORD.--October 1949 to current year.

GAGE.--Water-stage recorder. Altitude of gage is 980 ft (from topographic map).

AVERAGE DISCHARGE.--23 years, 13.8 cfs (10,000 acre-ft per year); median of yearly mean discharges, 7.9 cfs (5,700 acre-ft per year).

EXTREMES.--Current year: Maximum discharge, 640 cfs Dec. 27 (gage height, 5.05 ft); no flow for several months.
Period of record: Maximum discharge, 8,160 cfs Feb. 24, 1969 (gage height, 11.28 ft), from rating curve extended above 1,500 cfs on basis of slope-area measurement at gage height 9.56 ft; no flow for several months in each year.

REMARKS.--Records good. No regulation; small diversions above station for irrigation.

REVISIONS (WATER YEARS).--WSP 1395: 1950(M), 1952, 1953(M).

DISCHARGE, IN CUBIC FEET PER SECOND, WATER YEAR OCTOBER 1971 TO SEPTEMBER 1972

DAY	OCT	NOV	DEC	JAN	FEB	MAR	APR	MAY	JUN	JUL	AUG	SEP
1			0	6.4	2.6	1.5	.87	.64	.31	.04		
2			0	4.9	2.2	1.3	.79	.64	.31	.04		
3			0	4.0	1.9	1.3	.74	.64	.29	.04		
4			0	3.2	1.9	1.3	.79	.69	.27	.04		
5			0	2.7	36	1.3	.87	.69	.25	.04		
6			0	2.4	31	1.1	.79	.69	.23	.04		
7			0	2.4	15	1.1	.79	.69	.25	.03		
8			0	1.9	10	1.1	.79	.69	.25	.02		
9			0	1.7	7.8	1.1	.74	.64	.25	.02		
10			0	1.5	6.3	1.1	.69	.64	.20	.01		
11			0	1.3	5.4	1.1	.98	.59	.19	0		
12			0	1.3	4.5	1.1	1.1	.59	.17	0		
13			0	1.3	4.0	1.1	.98	.55	.16	0		
14			0	1.1	3.7	1.1	.87	.55	.16	0		
15			0	1.1	3.3	.98	.87	.51	.15	0		
16			0	.98	3.0	.98	.87	.51	.14	0		
17			0	.98	2.8	.98	.79	.51	.13	0		
18			0	.98	2.7	.98	.79	.51	.14	0		
19			0	.98	2.5	.87	.79	.55	.14	0		
20			0	.87	2.4	.98	.74	.51	.13	0		
21			0	.87	2.2	.98	.74	.55	.12	0		
22			0	.87	2.2	.98	.74	.51	.13	0		
23			0	.87	2.2	.87	.74	.51	.15	0		
24			3.0	.87	1.9	.98	.74	.51	.14	0		
25			132	.87	1.9	.87	.74	.51	.13	0		
26			45	.98	1.7	.87	.74	.47	.12	0		
27			274	2.4	1.7	.87	.69	.47	.09	0		
28			94	8.2	1.5	.87	.69	.44	.09	0		
29			27	5.7	1.5	.87	.69	.41	.04	0		
30			14	4.0	------	.87	.64	.38	.04	0		
31		------	9.1	3.0	------	.87	------	.36	------	0		------
TOTAL	0	0	598.1	70.62	165.8	32.27	23.79	17.15	5.17	.32	0	0
MEAN	0	0	19.3	2.28	5.72	1.04	.79	.55	.17	.010	0	0
MAX	0	0	274	8.2	36	1.5	1.1	.69	.31	.04	0	0
MIN	0	0	0	.87	1.5	.87	.64	.36	.04	0	0	0
AC-FT	0	0	1,190	140	329	64	47	34	10	.6	0	0

CAL YR 1971 TOTAL 1,504.05 MEAN 4.12 MAX 274 MIN 0 AC-FT 2,980
WTR YR 1972 TOTAL 913.22 MEAN 2.50 MAX 274 MIN 0 AC-FT 1,810

PEAK DISCHARGE (BASE, 600 CFS).--Dec. 27 (0100) 640 cfs (5.05 ft).

11147040 SANTA RITA CREEK TRIBUTARY NEAR TEMPLETON, CALIF.

LOCATION.--Lat 35°32'03", long 120°50'47", in Asuncion Grant, San Luis Obispo County, near left bank on downstream pier of highway bridge, 0.2 mile downstream from small left-bank tributary, and 8.6 miles west of Templeton.

DRAINAGE AREA.--2.95 sq mi.

PERIOD OF RECORD.--August 1967 to September 1972 (discontinued).

GAGE.--Water-stage recorder. Datum of gage is 1,178.36 ft above mean sea level.

AVERAGE DISCHARGE.--5 years, 3.51 cfs (2,540 acre-ft per year).

EXTREMES.--Current year: Maximum discharge, 554 cfs Dec. 26 (gage height, 6.99 ft); no flow for long periods. Period of record: Maximum discharge, 1,290 cfs Jan. 19, 1969 (gage height, 10.60 ft), from rating curve extended above 320 cfs on basis of slope-area measurement of maximum flow; no flow for long periods in each year.

REMARKS.--Records fair. No regulation; small diversions above station for irrigation. Records of water temperatures and suspended-sediment discharge for the current year are published in Part 2 of this report.

DISCHARGE, IN CUBIC FEET PER SECOND, WATER YEAR OCTOBER 1971 TO SEPTEMBER 1972

DAY	OCT	NOV	DEC	JAN	FEB	MAR	APR	MAY	JUN	JUL	AUG	SEP
1			0	.95	.26	.17	.05					
2			0	.70	.20	.17	.05					
3			0	.50	.14	.17	.05					
4			0	.39	.14	.17	.05					
5			0	.30	37	.17	.05					
6			0	.26	4.0	.17	.04					
7			0	.23	.78	.17	.04					
8			0	.20	.70	.17	.04					
9			0	.17	.63	.17	.04					
10			0	.17	.50	.12	.04					
11			0	.14	.39	.12	.06					
12			0	.14	.30	.12	.09					
13			0	.14	.26	.12	.09					
14			0	.14	.23	.12	.08					
15			0	.12	.20	.12	.07					
16			0	.12	.20	.10	.07					
17			0	.12	.20	.10	.06					
18			0	.12	.20	.10	.05					
19			0	.12	.17	.09	.04					
20			0	.10	.17	.09	.04					
21			.05	.10	.17	.09	.03					
22			7.2	.10	.17	.08	.02					
23			.11	.09	.17	.08	.01					
24			15	.10	.17	.08	.01					
25			79	.10	.17	.07	.01					
26			32	.10	.17	.07	0					
27			155	.78	.17	.07	0					
28			26	1.4	.17	.06	0					
29			2.7	.86	.17	.06	0					
30			1.6	.50	------	.06	0					
31		------	1.2	.34	------	.05	------		------			------
TOTAL	0	0	319.86	9.60	48.20	3.50	1.18	0	0	0	0	0
MEAN	0	0	10.3	.31	1.66	.11	.039	0	0	0	0	0
MAX	0	0	155	1.4	37	.17	.09	0	0	0	0	0
MIN	0	0	0	.09	.14	.05	0	0	0	0	0	0
AC-FT	0	0	634	19	96	6.9	2.3	0	0	0	0	0

CAL YR 1971 TOTAL 529.04 MEAN 1.45 MAX 155 MIN 0 AC-FT 1,050
WTR YR 1972 TOTAL 382.34 MEAN 1.04 MAX 155 MIN 0 AC-FT 758

PEAK DISCHARGE (BASE, 100 CFS).--Dec. 26 (2345) 554 cfs (6.99 ft); Feb. 5 (1545) 103 cfs (4.73 ft).

11147070 SANTA RITA CREEK NEAR TEMPLETON, CALIF.

LOCATION.--Lat 35°31'26", long 120°45'54", in Asuncion Grant, San Luis Obispo County, on left bank 1.6 miles upstream from mouth, and 4 miles west of Templeton.

DRAINAGE AREA.--18.2 sq mi.

PERIOD OF RECORD.--October 1961 to current year.

GAGE.--Water-stage recorder and rain gage. Altitude of gage is 860 ft (from topographic map). Auxiliary rain gage 5.3 miles west of gage. Altitude of gage is 1,270 ft (from topographic map).

AVERAGE DISCHARGE.--11 years, 13.5 cfs (9,780 acre-ft per year); median of yearly mean discharges, 9.8 cfs (7,100 acre-ft per year).

EXTREMES.--Current year: Maximum discharge, 345 cfs Dec. 27 (gage height, 5.56 ft); no flow for several months.
Period of record: Maximum discharge, 6,060 cfs Jan. 19, 1969 (gage height, 11.12 ft in gage well, 11.75 ft, from floodmarks), from rating curve extended above 1,300 cfs on basis of slope-area measurement of maximum flow; no flow for several months in each year.

REMARKS.--Records good. Some regulation and pumping above station. Records of water temperatures and suspended-sediment discharge for the current year are published in Part 2 of this report.

REVISIONS (WATER YEARS).--WRD Calif. 1969: 1967(M).

DISCHARGE, IN CUBIC FEET PER SECOND, WATER YEAR OCTOBER 1971 TO SEPTEMBER 1972

DAY	OCT	NOV	DEC	JAN	FEB	MAR	APR	MAY	JUN	JUL	AUG	SEP
1			0	13	1.4	1.0	.12	.09				
2			0	12	1.2	.89	.12	.10				
3			0	12	1.0	.89	.12	.10				
4			0	11	1.0	.89	.12	.07				
5			0	10	38	.89	.12	.07				
6			0	9.7	23	.89	.12	.06				
7			0	8.8	9.3	.75	.11	.05				
8			0	8.0	6.2	.75	.10	.05				
9			0	6.6	4.8	.62	.11	.04				
10			0	2.9	3.8	.51	.11	.03				
11			0	1.9	3.1	.51	.37	.03				
12			0	1.7	2.7	.51	.81	.02				
13			0	1.2	2.5	.51	1.5	.02				
14			0	1.0	2.3	.51	.61	.02				
15			0	.89	2.1	.51	.43	.01				
16			0	.75	1.9	.33	.36	.01				
17			0	.75	1.7	.33	.33	.01				
18			0	.62	1.7	.33	.26	0				
19			0	.62	1.5	.33	.24	.01				
20			0	.62	1.5	.33	.21	.01				
21			0	.62	1.4	.33	.18	0				
22			3.4	.62	1.5	.26	.16	0				
23			5.0	.62	1.4	.26	.16	0				
24			10	.51	1.4	.26	.18	0				
25			53	.51	1.2	.21	.15	0				
26			14	.62	1.2	.21	.12	0				
27			169	4.2	1.2	.16	.11	0				
28			58	5.9	1.0	.16	.10	0				
29			21	2.7	1.0	.12	.09	0				
30			17	1.9	------	.12	.09	0				
31		------	14	1.5	------	.12	------	0	------			------
TOTAL	0	0	364.4	123.75	122.0	14.49	7.61	.80	0	0	0	0
MEAN	0	0	11.8	3.99	4.21	.47	.25	.026	0	0	0	0
MAX	0	0	169	13	38	1.0	1.5	.10	0	0	0	0
MIN	0	0	0	.51	1.0	.12	.09	0	0	0	0	0
AC-FT	0	0	723	245	242	29	15	1.6	0	0	0	0
(a)	0	1.80	-	-	1.10	0	1.21	.04	-	-	0	0
(b)	-	-	-	1.41	2.26	0	0	0	0	0	0	0

CAL YR 1971 TOTAL 1,208.54 MEAN 3.31 MAX 169 MIN 0 AC-FT 2,400
WTR YR 1972 TOTAL 633.05 MEAN 1.73 MAX 169 MIN 0 AC-FT 1,260

PEAK DISCHARGE (BASE, 600 CFS).--No peak above base.

a Precipitation, in inches.
b Precipitation, in inches, at auxiliary gage.

11147500 SALINAS RIVER AT PASO ROBLES, CALIF.

LOCATION.--Lat 35°37'43", long 120°41'00", in Paso de Robles Grant, San Luis Obispo County, on left bank at upstream side of 13th Street Bridge in Paso Robles, 3.5 miles upstream from Huerhuero Creek.

DRAINAGE AREA.--390 sq mi.

PERIOD OF RECORD.--October 1939 to September 1965, October 1969 to current year.

GAGE.--Water-stage recorder. Datum of gage is 670.61 ft above mean sea level. Prior to June 14, 1951, nonrecording gage, and June 14, 1951, to Sept. 30, 1965, water-stage recorder at same site and datum.

AVERAGE DISCHARGE.--29 years, 82.5 cfs (59,770 acre-ft per year); median of yearly mean discharges, 37 cfs (26,800 acre-ft per year).

EXTREMES.--Current year: Maximum discharge, 144 cfs Dec. 28 (gage height, 6.77 ft); no flow for long periods.

Period of record: Maximum discharge, 14,200 cfs Mar. 9, 1943 (gage height, 16.2 ft, from stage graph), from rating curve extended above 6,000 cfs on basis of velocity-area studies; maximum gage height, 17.24 ft, Apr. 3, 1958; no flow for long periods in each year.

Flood of Jan. 25, 1969, reached a stage of 23.8 ft, from floodmarks (discharge, 28,000 cfs).

REMARKS.--Records fair. Flow regulated by Santa Margarita Lake 32 miles upstream beginning in 1941 (see sta 11144500). Small diversions above station. Records of chemical analyses for the current year are published in Part 2 of this report.

REVISIONS (WATER YEARS).--WSP 981: 1942.

DISCHARGE, IN CUBIC FEET PER SECOND, WATER YEAR OCTOBER 1971 TO SEPTEMBER 1972

DAY	OCT	NOV	DEC	JAN	FEB	MAR	APR	MAY	JUN	JUL	AUG	SEP
1			0	.02	2.7	1.7	0					
2			0	0	1.1	1.4	0					
3			0	0	1.0	1.1	0					
4			0	0	1.3	1.0	0					
5			0	0	2.9	.90	0					
6			0	0	55	.80	0					
7			0	0	34	.66	0					
8			0	0	26	.54	0					
9			0	0	18	.53	0					
10			0	0	13	.58	0					
11			0	0	12	.49	.08					
12			0	0	9.2	.46	.31					
13			0	0	9.2	.36	.14					
14			0	0	7.5	.27	0					
15			0	0	6.6	.22	0					
16			0	0	6.6	.15	0					
17			0	0	6.2	.11	0					
18			0	0	5.3	.02	0					
19			0	0	4.9	0	0					
20			0	0	4.0	0	0					
21			0	0	4.0	0	0					
22			0	0	3.5	0	0					
23			0	0	3.5	0	0					
24			0	0	3.1	0	0					
25			0	0	2.9	0	0					
26			0	0	2.9	0	0					
27			3.1	1.4	2.5	0	0					
28			92	1.9	2.3	0	0					
29			22	2.7	2.3	0	0					
30			2.7	4.0	------	0	0					
31		------	.30	3.5	------	0	------		------			------
TOTAL	0	0	120.10	13.52	253.5	11.29	.53	0	0	0	0	0
MEAN	0	0	3.87	.44	8.74	.36	.018	0	0	0	0	0
MAX	0	0	92	4.0	55	1.7	.31	0	0	0	0	0
MIN	0	0	0	0	1.0	0	0	0	0	0	0	0
AC-FT	0	0	238	27	503	22	1.1	0	0	0	0	0

CAL YR 1971	TOTAL 5,887.86	MEAN 16.1	MAX 474	MIN 0	AC-FT 11,680
WTR YR 1972	TOTAL 398.94	MEAN 1.09	MAX 92	MIN 0	AC-FT 791

PEAK DISCHARGE (BASE, 1,100 CFS).--No peak above base.

11147600 HUERHUERO CREEK NEAR CRESTON, CALIF.

LOCATION.--Lat 35°35'03", long 120°33'14", in NE¼NE¼ sec.15, T.27 S., R.13 E., San Luis Obispo County, on right bank 1 mile northwest of Geneseo School, and 4.6 miles northwest of Creston.

DRAINAGE AREA.--101 sq mi.

PERIOD OF RECORD.--October 1958 to September 1972 (discontinued).

GAGE.--Water-stage recorder. Concrete control since Oct. 1, 1969. Altitude of gage is 930 ft (from topographic map). Prior to Oct. 1, 1969, at site 0.2 mile downstream at same datum.

AVERAGE DISCHARGE.--14 years, 5.86 cfs (4,250 acre-ft per year); median of yearly mean discharges, 0.08 cfs (58 acre-ft per year).

EXTREMES.--Current year: Maximum discharge, 0.22 cfs Jan. 27 (gage height, 5.91 ft); no flow for long periods. Period of record: Maximum discharge, 13,800 cfs Feb. 24, 1969 (gage height, 13.2 ft, from floodmarks), from rating curve extended above 1,500 cfs on basis of slope-area measurement of maximum flow; no flow for long periods in each year.

REMARKS.--Records poor. No regulation; small diversions above station for irrigation.

DISCHARGE, IN CUBIC FEET PER SECOND, WATER YEAR OCTOBER 1971 TO SEPTEMBER 1972

DAY	OCT	NOV	DEC	JAN	FEB	MAR	APR	MAY	JUN	JUL	AUG	SEP
1				0	.14	.12	.09					
2				0	.12	.11	.09					
3				0	.12	.11	.07					
4				0	.14	.11	.01					
5				0	.17	.11	0					
6				0	.14	.09	0					
7				0	.14	.08	0					
8				0	.14	.07	0					
9				0	.14	.07	0					
10				0	.12	.07	0					
11				0	.11	.09	0					
12				0	.11	.09	0					
13				0	.11	.09	0					
14				0	.11	.09	0					
15				0	.11	.09	0					
16				0	.12	.09	0					
17				0	.14	.07	0					
18				0	.14	.07	0					
19				0	.12	.07	0					
20				0	.12	.07	0					
21				0	.14	.09	0					
22				0	.14	.09	0					
23				0	.14	.07	0					
24				0	.14	.07	0					
25				0	.14	.07	0					
26				0	.14	.07	0					
27				.08	.14	.07	0					
28				.19	.14	.07	0					
29				.12	.14	.09	0					
30				.12	------	.09	0					
31		------		.12	------	.09	------		------			------
TOTAL	0	0	0	.63	3.82	2.63	.26	0	0	0	0	0
MEAN	0	0	0	.020	.13	.085	.009	0	0	0	0	0
MAX	0	0	0	.19	.17	.12	.09	0	0	0	0	0
MIN	0	0	0	0	.11	.07	0	0	0	0	0	0
AC-FT	0	0	0	1.3	7.6	5.2	.5	0	0	0	0	0

CAL YR 1971 TOTAL 10.12 MEAN .028 MAX .27 MIN 0 AC-FT 20
WTR YR 1972 TOTAL 7.34 MEAN .020 MAX .19 MIN 0 AC-FT 15

PEAK DISCHARGE (BASE, 40 CFS).--No peak above base.

11147800 CHOLAME CREEK NEAR SHANDON, CALIF.

LOCATION.--Lat 35°41'20", long 120°20'03", in SE¼ sec.3, T.26 S., R.15 E., San Luis Obispo County, on left bank 500 ft upstream from bridge on State Highway 46, 2.6 miles downstream from White Canyon, and 3.5 miles northeast of Shandon.

DRAINAGE AREA.--227 sq mi.

PERIOD OF RECORD.--October 1958 to September 1972 (discontinued).

GAGE.--Water-stage recorder. Datum of gage is 1,069.0 ft above mean sea level (planetable survey).

AVERAGE DISCHARGE.--14 years, 5.79 cfs (4,190 acre-ft per year); median of yearly mean discharges, 0.42 cfs (300 acre-ft per year).

EXTREMES.--Current year: Maximum discharge, 16 cfs Dec. 28 (gage height, 1.02 ft); no flow for long periods. Period of record: Maximum discharge, 6,900 cfs Feb. 24, 1969 (gage height, 14.06 ft in gage well, 14.5 ft, from floodmarks); no flow for long periods in each year.

REMARKS.--Records fair. No regulation; small diversions above station for irrigation.

REVISIONS (WATER YEARS).--WRD Calif. 1969: 1967(M).

DISCHARGE, IN CUBIC FEET PER SECOND, WATER YEAR OCTOBER 1971 TO SEPTEMBER 1972

DAY	OCT	NOV	DEC	JAN	FEB	MAR	APR	MAY	JUN	JUL	AUG	SEP
1			0									
2			0									
3			0									
4			0									
5			0									
6			0									
7			0									
8			0									
9			0									
10			0									
11			0									
12			0									
13			0									
14			0									
15			0									
16			0									
17			0									
18			0									
19			0									
20			0									
21			0									
22			0									
23			0									
24			0									
25			0									
26			0									
27			0									
28			10									
29			4.5									
30			.80		------							
31		------	0		------		------		------			------
TOTAL	0	0	15.30	0	0	0	0	0	0	0	0	0
MEAN	0	0	.49	0	0	0	0	0	0	0	0	0
MAX	0	0	10	0	0	0	0	0	0	0	0	0
MIN	0	0	0	0	0	0	0	0	0	0	0	0
AC-FT	0	0	30	0	0	0	0	0	0	0	0	0

CAL YR 1971 TOTAL 35.22 MEAN .097 MAX 10 MIN 0 AC-FT 70
WTR YR 1972 TOTAL 15.30 MEAN .042 MAX 10 MIN 0 AC-FT 30

PEAK DISCHARGE (BASE, 100 CFS).--No peak above base.

11148500 ESTRELLA RIVER NEAR ESTRELLA, CALIF.

LOCATION.--Lat 35°43'02", long 120°38'21", in NW¼NW¼ sec.36, T.25 S., R.12 E., San Luis Obispo County, on right bank 0.2 mile downstream from mouth of Ranchito Canyon, and 1.9 miles northwest of Estrella.

DRAINAGE AREA.--922 sq mi, not including Carrizo Plains.

PERIOD OF RECORD.--October 1954 to current year. Prior to October 1960, published as Estrella Creek near Estrella.

GAGE.--Water-stage recorder and concrete control. Datum of gage is 671.59 ft above mean sea level (levels by Corps of Engineers).

AVERAGE DISCHARGE.--18 years, 24.9 cfs (18,040 acre-ft per year); median of yearly mean discharges, 3.0 cfs (2,200 acre-ft per year).

EXTREMES.--Current year: Maximum discharge, 8.4 cfs Jan. 27 (gage height, 2.32 ft); no flow for several months. Period of record: Maximum discharge, 32,500 cfs Feb. 24, 1969 (gage height, 10.4 ft, from floodmarks), by slope-area measurement of maximum flow; maximum gage height, 10.9 ft Jan. 25, 1969, from floodmarks; no flow for several months in each year.

REMARKS.--Records fair. No regulation; pumpage from wells along river for irrigation above station.

DISCHARGE, IN CUBIC FEET PER SECOND, WATER YEAR OCTOBER 1971 TO SEPTEMBER 1972

DAY	OCT	NOV	DEC	JAN	FEB	MAR	APR	MAY	JUN	JUL	AUG	SEP
1			0	.55	5.1	1.6						
2			0	.61	4.4	1.5						
3			0	.56	4.4	1.4						
4			0	.27	4.4	1.3						
5			0	.42	5.1	1.2						
6			0	.60	4.4	1.2						
7			0	.72	4.4	.86						
8			0	.73	4.4	.19						
9			0	.77	4.6	.17						
10			0	.70	4.1	.95						
11			0	.90	4.0	.83						
12			0	1.1	3.7	1.1						
13			0	1.1	3.7	1.1						
14			0	1.1	3.9	1.0						
15			0	1.1	3.9	.39						
16			0	1.1	3.1	0						
17			0	1.1	3.5	0						
18			0	1.3	3.4	0						
19			0	1.1	3.1	0						
20			0	1.1	3.1	0						
21			0	1.3	3.1	0						
22			0	1.3	3.2	0						
23			0	1.3	2.9	0						
24			0	1.6	3.2	0						
25			0	1.6	3.3	0						
26			0	1.3	2.8	0						
27			0	6.6	2.4	0						
28			0	6.6	2.2	0						
29			0	6.6	1.7	0						
30			.35	5.1	------	0						
31		------	.66	5.1	------	0	------		------			------
TOTAL	0	0	1.01	55.33	105.5	14.79	0	0	0	0	0	0
MEAN	0	0	.033	1.78	3.64	.48	0	0	0	0	0	0
MAX	0	0	.66	6.6	5.1	1.6	0	0	0	0	0	0
MIN	0	0	0	.27	1.7	0	0	0	0	0	0	0
AC-FT	0	0	2.0	110	209	29	0	0	0	0	0	0

CAL YR 1971 TOTAL 312.54 MEAN .86 MAX 5.9 MIN 0 AC-FT 620
WTR YR 1972 TOTAL 176.63 MEAN .48 MAX 6.6 MIN 0 AC-FT 350

PEAK DISCHARGE (BASE, 200 CFS).--No peak above base.

11148900 NACIMIENTO RIVER BELOW SAPAQUE CREEK, NEAR BRYSON, CALIF.

LOCATION.--Lat 35°47'19", long 121°05'34", in SW¼NE¼ sec.3, T.25 S., R.8 E., San Luis Obispo County, on left bank just downstream from Sapaque Creek, 1.4 miles south of Bryson.

DRAINAGE AREA.--156 sq mi.

PERIOD OF RECORD.--October 1971 to September 1972.

GAGE.--Water-stage recorder. Altitude of gage is 800 ft (from topographic map).

EXTREMES.--Current year: Maximum discharge, 7,890 cfs Dec. 25 (gage height, 16.84 ft), from rating curve extended above 800 cfs on basis of slope-area measurement of maximum flow; no flow for several months.

REMARKS.--Records good. No storage or diversion above station. Records of water temperatures and suspended-sediment discharge for the current year are published in Part 2 of this report.

DISCHARGE, IN CUBIC FEET PER SECOND, WATER YEAR OCTOBER 1971 TO SEPTEMBER 1972

DAY	OCT	NOV	DEC	JAN	FEB	MAR	APR	MAY	JUN	JUL	AUG	SEP
1		0	0	158	56	34	14	8.9	.94			
2		0	.1	130	52	32	13	8.9	.78			
3		0	14	111	49	32	13	8.1	.53			
4		0	15	94	47	32	13	7.6	.41			
5		0	10	83	462	29	13	7.3	.32			
6		0	7.9	76	463	28	13	8.1	.21			
7		0	5.5	70	264	27	14	8.1	.20			
8		0	3.5	64	192	26	13	8.1	.18			
9		0	3.4	59	156	24	11	7.7	.14			
10		0	3.3	55	131	25	11	7.5	.11			
11		0	3.2	52	112	25	24	7.6	.10			
12		0	3.6	50	97	23	49	7.0	.11			
13		0	8.6	48	87	23	33	6.2	.09			
14		0	16	45	80	22	30	5.4	.08			
15		.01	11	43	73	21	23	5.0	.07			
16		.01	8.6	41	68	20	20	4.4	.05			
17		.01	7.4	40	64	20	18	4.0	.04			
18		.01	6.5	38	61	18	16	3.7	.04			
19		.01	5.8	37	56	18	15	3.9	.03			
20		.01	5.3	35	53	17	14	4.5	.02			
21		.02	5.7	34	51	15	13	5.4	.02			
22		.02	1,260	33	50	16	13	5.3	.01			
23		.03	476	32	47	15	13	5.1	.02			
24		.03	992	31	45	15	12	4.3	.02			
25		.03	3,530	31	43	16	12	3.9	.01			
26		.02	1,150	36	41	15	12	3.6	.01			
27		.02	2,370	81	39	14	12	3.4	.01			
28		.02	1,010	128	37	14	11	2.9	0			
29		.02	448	80	35	14	9.9	2.3	0			
30		.02	282	66	------	14	9.4	1.9	0			
31		------	205	60	------	14	------	1.4	------			------
TOTAL	0	.29	11,867.4	1,941	3,011	658	487.3	171.5	4.55	0	0	0
MEAN	0	.010	383	62.6	104	21.2	16.2	5.53	.15	0	0	0
MAX	0	.03	3,530	158	463	34	49	8.9	.94	0	0	0
MIN	0	0	0	31	35	14	9.4	1.4	0	0	0	0
AC-FT	0	.6	23,540	3,850	5,970	1,310	967	340	9.0	0	0	0

WTR YR 1972 TOTAL 18,141.04 MEAN 49.6 MAX 3,530 MIN 0 AC-FT 35,980

PEAK DISCHARGE (BASE, 4,000 CFS).--Dec. 25 (0945) 7,890 cfs (16.84 ft).

RESERVOIRS IN SALINAS RIVER BASIN, CALIF.

11149300 NACIMIENTO RESERVOIR.--Lat 35°45'29", long 120°53'01", in NW¼ sec.15, T.25 S., R.10 E., San Luis Obispo County, at right end of dam on Nacimiento River, 8.6 miles southwest of Bradley, and 12.3 miles upstream from mouth. Drainage area, 319 sq mi. Period of record, February 1957 to current year. Monthend contents prior to October 1970, published in WRD Calif. 1970. Nonrecording gage read once daily. Datum of gage is at mean sea level (levels by Monterey County Flood Control and Water Conservation District). Extremes for current year: Maximum contents observed, 79,000 acre-ft Mar. 2 (elevation, 727.65 ft); minimum observed, 24,400 acre-ft Sept. 30 (elevation, 691.8 ft). Extremes for period of record: Maximum contents observed, 374,500 acre-ft Apr. 7, 1958 (elevation, 804.7 ft); minimum observed since appreciable storage was attained, 10,910 acre-ft Oct. 11, 1960 (elevation, 670.8 ft).

Reservoir is formed by earthfill dam completed in 1957. Total capacity, 350,000 acre-ft; usable capacity, 340,000 acre-ft between elevations 670.0 ft (outlet) and 800.0 ft (crest of spillway). Dead storage, 10,000 acre-ft. Figures given herein represent total contents. Reservoir is used for flood control and water released down Nacimiento River for irrigation. Record of contents furnished by Monterey County Flood Control and Water Conservation District.

11150100 SAN ANTONIO RESERVOIR.--Lat 35°47'55", long 120°53'02", in SW¼ sec.34, T.24 S., R.10 E., Monterey County, at dam on San Antonio River, 0.7 mile upstream from Sulphur Canyon, and 6.4 miles southwest of Bradley. Drainage area, 330 sq mi. Period of record, December 1965 to current year. Monthend contents prior to October 1970, published in WRD Calif. 1970. Water-stage recorder. Datum of gage is at mean sea level (levels by Monterey County Flood Control and Water Conservation District). Extremes for current year: Maximum contents, 249,300 acre-ft Oct. 1 (elevation, 760.85 ft); minimum, 100,100 acre-ft Sept. 30 (elevation, 716.9 ft). Extremes for period of record: Maximum contents, 348,900 acre-ft May 27, 1969 (elevation, 779.8 ft, corrected); minimum since appreciable storage was attained, 100,100 acre-ft Sept. 30, 1972 (elevation, 716.9 ft).

Reservoir is formed by earthfill dam completed in 1965. Total capacity, 350,000 acre-ft; usable capacity, 330,000 acre-ft between elevations 662.0 ft (minimum pool) and 780.0 ft (crest of spillway). Dead storage, 20,000 acre-ft. Records given herein represent total contents. Reservoir is used for flood control and water released down San Antonio River for irrigation. Record of contents furnished by Monterey County Flood Control and Water Conservation District.

MONTHEND CONTENTS, IN ACRE-FEET, AT 2400, OCTOBER 1971 TO SEPTEMBER 1972

Date	Nacimiento Reservoir	San Antonio Reservoir
Sept. 30, 1971.	52,600	251,400
Oct. 31.....	37,140	247,100
Nov. 30.....	34,980	241,800
Dec. 31.....	65,640	238,300
Jan. 31, 1972..	70,590	238,900
Feb. 29.....	78,760	240,900
Mar. 31.....	73,400	232,000
Apr. 30.....	61,900	218,800
May 31.....	46,080	207,900
June 30.....	32,000	195,000
July 31.....	26,260	167,000
Aug. 31.....	25,280	128,800
Sept. 30.....	24,400	100,100

11149400 NACIMIENTO RIVER BELOW NACIMIENTO DAM, NEAR BRADLEY, CALIF.

LOCATION.--Lat 35°45'41", long 120°51'16", in NE¼NE¼ sec.14, T.25 S., R.10 E., San Luis Obispo County, Camp Roberts Military Reservation, on left bank 2.2 miles downstream from Nacimiento Dam, and 7.6 miles southwest of Bradley.

DRAINAGE AREA.--322 sq mi.

PERIOD OF RECORD.--October 1957 to current year.

GAGE.--Water-stage recorder. Datum of gage is 597 ft above mean sea level (Corps of Engineers bench mark).

AVERAGE DISCHARGE (unadjusted).--15 years, 270 cfs (195,600 acre-ft per year).

EXTREMES.--Current year: Maximum discharge, 467 cfs Oct. 1-5 (gage height, 4.86 ft); minimum daily, 0.06 cfs Dec. 20, 21.
Period of record: Maximum discharge, 7,340 cfs Feb. 25, 1969 (gage height, 10.92 ft); no flow for many days in each year except 1964, 1966-72.

REMARKS.--Records good. Flow regulated by Nacimiento Dam 2.2 miles upstream (see sta 11149300). No diversion above station.

REVISIONS (WATER YEARS).--WRD Calif. 1970: 1969.

DISCHARGE, IN CUBIC FEET PER SECOND, WATER YEAR OCTOBER 1971 TO SEPTEMBER 1972

DAY	OCT	NOV	DEC	JAN	FEB	MAR	APR	MAY	JUN	JUL	AUG	SEP
1	467	178	.21	.25	15	53	302	196	282	257	11	12
2	467	124	.35	.25	15	84	299	244	282	257	12	12
3	467	122	.69	.21	15	84	302	296	282	257	11	12
4	467	122	.50	.18	15	84	302	296	278	257	11	12
5	467	122	.41	.18	15	84	244	296	282	254	11	12
6	412	122	.35	.21	15	84	199	296	282	254	11	12
7	380	122	.30	.25	16	84	199	296	278	254	11	12
8	380	122	.21	.25	15	84	199	292	278	257	11	12
9	378	119	.18	.35	16	133	199	296	278	257	11	12
10	378	119	.18	.35	16	202	199	292	278	257	11	12
11	372	87	.18	.35	16	202	199	296	274	257	11	12
12	372	4.5	.18	.35	17	202	199	296	274	260	11	12
13	368	1.3	.18	3.7	17	202	199	296	274	120	11	12
14	299	.59	.18	14	17	199	199	296	271	12	12	12
15	254	.35	.18	14	17	202	199	296	271	11	12	12
16	254	1.5	.12	14	18	95	199	292	271	11	12	12
17	250	2.2	.10	14	18	16	199	292	271	11	12	12
18	247	2.4	.08	14	17	16	199	296	271	11	12	12
19	244	2.2	.07	14	19	16	199	296	271	11	12	13
20	241	2.2	.06	14	18	16	199	292	268	12	12	13
21	241	2.1	.06	14	19	16	199	292	268	14	12	13
22	238	2.1	3.2	14	20	16	196	288	268	14	12	13
23	235	2.1	2.9	14	20	16	196	288	268	13	12	13
24	232	2.1	2.4	14	19	111	199	288	264	12	12	12
25	232	1.9	3.8	14	21	199	196	288	264	12	11	11
26	232	1.9	2.4	14	21	202	196	285	260	12	12	11
27	229	.80	5.4	16	21	199	196	285	260	12	12	12
28	229	.25	2.6	15	21	202	196	285	257	12	12	12
29	226	.25	1.5	15	21	202	196	285	257	12	12	12
30	226	.25	.69	15	------	202	196	285	257	12	12	12
31	226	------	.41	15	------	260	------	282	------	12	12	------
TOTAL	9,710	1,389.99	30.07	264.88	510	3,767	6,400	8,899	8,139	3,414	359	363
MEAN	313	46.3	.97	8.54	17.6	122	213	287	271	110	11.6	12.1
MAX	467	178	5.4	16	21	260	302	296	282	260	12	13
MIN	226	.25	.06	.18	15	16	196	196	257	11	11	11
AC-FT	19,260	2,760	60	525	1,010	7,470	12,690	17,650	16,140	6,770	712	720

CAL YR 1971 TOTAL 79,538.06 MEAN 218 MAX 529 MIN .06 AC-FT 157,800
WTR YR 1972 TOTAL 43,245.94 MEAN 118 MAX 467 MIN .06 AC-FT 85,780

11149900 SAN ANTONIO RIVER NEAR LOCKWOOD, CALIF.

LOCATION.--Lat 35°53'48", long 121°05'14", in Los Ojitos Grant, Monterey County, on downstream side of highway bridge, 0.4 mile upstream from Tule Canyon, and 3.3 miles south of Lockwood.

DRAINAGE AREA.--223 sq mi.

PERIOD OF RECORD.--October 1965 to current year.

GAGE.--Water-stage recorder. Datum of gage is 800.00 ft above mean sea level.

AVERAGE DISCHARGE.--7 years, 89.5 cfs (64,840 acre-ft per year).

EXTREMES.--Current year: Maximum discharge, 373 cfs Dec. 27 (gage height, 1.48 ft); no flow for several months. Period of record: Maximum discharge, 14,000 cfs Jan. 26, 1969 (gage height, 8.25 ft); maximum gage height, 9.2 ft, from floodmarks, Dec. 6, 1966; no flow for several months in each year.

REMARKS.--Records good. No regulation; some pumping above station. Records of water temperatures and total-sediment discharge for the current year are published in Part 2 of this report.

DISCHARGE, IN CUBIC FEET PER SECOND, WATER YEAR OCTOBER 1971 TO SEPTEMBER 1972

DAY	OCT	NOV	DEC	JAN	FEB	MAR	APR	MAY	JUN	JUL	AUG	SEP
1			0	52	31	19	8.0	2.5				
2			0	44	27	19	7.4	2.2				
3			0	41	25	19	6.8	1.7				
4			0	38	25	18	6.8	1.3				
5			0	35	64	18	7.4	1.3				
6			0	33	176	17	7.4	1.3				
7			0	31	96	16	6.8	1.1				
8			0	28	69	15	6.8	.93				
9			0	27	55	15	6.8	.64				
10			0	25	48	13	6.2	.35				
11			0	24	44	13	8.0	.15				
12			0	22	39	14	11	0				
13			0	21	37	14	16	0				
14			0	18	37	14	14	0				
15			0	18	35	14	12	0				
16			0	18	37	14	10	0				
17			0	18	34	14	8.6	0				
18			0	17	32	12	8.0	0				
19			0	17	29	12	7.4	0				
20			0	16	24	11	6.2	0				
21			0	16	21	11	5.7	0				
22			0	16	22	11	5.2	0				
23			0	16	25	9.3	5.2	0				
24			0	15	24	9.3	4.8	0				
25			163	16	23	9.3	4.3	0				
26			198	16	22	9.3	3.9	0				
27			286	20	21	9.3	3.6	0				
28			216	58	20	8.6	3.2	0				
29			126	46	20	8.0	2.8	0				
30			87	39	------	8.0	2.5	0				
31		------	64	32	------	7.4	------	0	------			------
TOTAL	0	0	1,140	833	1,162	401.5	212.8	13.47	0	0	0	0
MEAN	0	0	36.8	26.9	40.1	13.0	7.09	.43	0	0	0	0
MAX	0	0	286	58	176	19	16	2.5	0	0	0	0
MIN	0	0	0	15	20	7.4	2.5	0	0	0	0	0
AC-FT	0	0	2,260	1,650	2,300	796	422	27	0	0	0	0

CAL YR 1971 TOTAL 9,808.82 MEAN 26.9 MAX 286 MIN 0 AC-FT 19,460
WTR YR 1972 TOTAL 3,762.77 MEAN 10.3 MAX 286 MIN 0 AC-FT 7,460

PEAK DISCHARGE (BASE, 350 CFS).--Dec. 27 (1615) 373 cfs (1.48 ft).

11150500 SALINAS RIVER NEAR BRADLEY, CALIF.

LOCATION.--Lat 35°55'49", long 120°52'04", in SW¼NW¼ sec.14, T.23 S., R.10 E., Monterey County, on left bank 6 miles northwest of Bradley, and 7 miles downstream from San Antonio River.

DRAINAGE AREA.--2,535 sq mi.

PERIOD OF RECORD.--October 1948 to current year. Monthly discharge only for some periods, published in WSP 1315-B.

GAGE.--Water-stage recorder. Datum of gage is 442.69 ft above mean sea level (levels by Corps of Engineers).

AVERAGE DISCHARGE (unadjusted).--24 years, 430 cfs (311,500 acre-ft per year).

EXTREMES.--Current year: Maximum discharge, 926 cfs Aug. 8 (gage height, 6.22 ft); minimum daily, 15 cfs Jan. 16.
Period of record: Maximum discharge, 117,000 cfs Feb. 24, 1969 (gage height, 20.34 ft, from floodmarks); no flow at times in 1951, 1954-55, 1957.

REMARKS.--Records poor. Flow partly regulated by Santa Margarita Lake (see sta 11144500) Nacimiento Reservoir beginning in February 1957 (see sta 11149300), and San Antonio Reservoir beginning in December 1965 (see sta 11150100). Several small diversions above station. Records of chemical analyses for the current year are published in Part 2 of this report.

REVISIONS (WATER YEARS).--WSP 1285: 1950.

DISCHARGE, IN CUBIC FEET PER SECOND, WATER YEAR OCTOBER 1971 TO SEPTEMBER 1972

DAY	OCT	NOV	DEC	JAN	FEB	MAR	APR	MAY	JUN	JUL	AUG	SEP
1	390	206	144	32	22	23	490	362	448	508	670	516
2	370	166	148	29	23	37	508	345	439	517	562	566
3	350	144	148	27	23	61	524	350	422	517	610	599
4	340	144	157	26	23	71	525	366	382	499	544	588
5	338	144	157	26	24	73	534	347	352	490	580	571
6	352	157	153	23	23	78	444	353	368	499	640	608
7	310	148	144	21	24	78	429	373	405	499	670	606
8	291	144	136	20	24	89	427	389	430	508	730	601
9	284	148	131	19	24	91	423	385	430	508	672	562
10	284	152	127	19	24	127	416	382	430	490	653	544
11	291	152	131	18	25	166	415	424	430	499	650	544
12	284	175	131	16	24	170	438	415	422	517	661	562
13	272	163	131	16	23	170	370	411	430	561	678	630
14	272	141	140	16	24	184	346	423	456	508	676	670
15	240	142	136	16	24	192	322	432	456	499	663	690
16	225	132	127	15	23	197	325	442	448	508	646	590
17	220	122	97	17	24	255	330	470	456	456	622	553
18	215	117	101	17	23	225	330	476	464	398	597	544
19	210	110	114	17	24	230	333	481	456	499	578	535
20	206	123	114	19	25	225	309	498	430	544	619	508
21	206	135	114	19	25	250	310	482	414	524	627	473
22	202	142	97	21	25	235	321	464	422	590	619	473
23	197	154	91	21	25	215	318	430	430	610	614	430
24	197	155	68	21	24	215	306	422	482	610	601	439
25	192	162	57	25	24	278	286	390	473	600	600	405
26	197	160	50	25	24	352	305	382	448	590	614	430
27	192	155	55	26	25	382	334	398	448	571	626	448
28	192	147	61	25	25	390	358	430	467	562	631	398
29	188	150	44	21	24	375	362	422	482	524	476	375
30	192	148	40	24	------	390	362	414	482	535	512	345
31	202	------	35	23	------	414	------	439	------	610	503	------
TOTAL	7,901	4,438	3,379	660	694	6,238	11,500	12,797	13,102	16,350	19,144	15,803
MEAN	255	148	109	21.3	23.9	201	383	413	437	527	618	527
MAX	390	206	157	32	25	414	534	498	482	610	730	690
MIN	188	110	35	15	22	23	286	345	352	398	476	345
AC-FT	15,670	8,800	6,700	1,310	1,380	12,370	22,810	25,380	25,990	32,430	37,970	31,350

CAL YR 1971 TOTAL 94,698 MEAN 259 MAX 1,990 MIN 17 AC-FT 187,800
WTR YR 1972 TOTAL 112,006 MEAN 306 MAX 730 MIN 15 AC-FT 222,200

11151300 SAN LORENZO CREEK BELOW BITTERWATER CREEK, NEAR KING CITY, CALIF.

LOCATION.--Lat 36°16'05", long 121°03'55", in NE¼ sec.23, T.19 S., R.8 E., Monterey County, on right bank 1.3 miles downstream from Bitterwater Creek, 5 miles northeast of King City, and 10 miles upstream from mouth.

DRAINAGE AREA.--233 sq mi.

PERIOD OF RECORD.--October 1958 to current year.

GAGE.--Water-stage recorder. Datum of gage is 431.64 ft above mean sea level. Prior to Apr. 24, 1967, at site 500 ft upstream at datum 5.00 ft higher.

AVERAGE DISCHARGE.--14 years, 11.3 cfs (8,190 acre-ft per year); median of yearly mean discharges, 5.7 cfs (4,100 acre-ft per year).

EXTREMES.--Current year: Maximum discharge, 459 cfs Dec. 27 (gage height, 5.98 ft); minimum daily, 0.19 cfs Aug. 10-23.
Period of record: Maximum discharge, 10,800 cfs Jan. 25, 1969 (gage height, 15.33 ft in gage well, 16.2 ft, from floodmarks); no flow many days in 1961.

REMARKS.--Records fair. No regulation; small diversions above station.

DISCHARGE, IN CUBIC FEET PER SECOND, WATER YEAR OCTOBER 1971 TO SEPTEMBER 1972

DAY	OCT	NOV	DEC	JAN	FEB	MAR	APR	MAY	JUN	JUL	AUG	SEP
1	.32	.70	1.4	4.7	3.1	1.9	.80	.47	.41	.28	.24	.25
2	.32	.70	1.4	4.4	3.1	1.9	.90	.41	.41	.28	.26	.25
3	.32	.70	2.0	4.2	2.8	1.9	.70	.47	.36	.28	.27	.25
4	.28	.70	2.7	3.9	3.1	1.9	.61	.53	.36	.28	.27	.28
5	.28	.70	2.3	3.7	3.5	1.9	.70	.47	.36	.28	.25	.32
6	.25	.70	2.0	3.5	6.7	1.7	.90	.47	.36	.30	.21	.32
7	.25	.70	1.8	3.3	6.7	1.7	.80	.47	.41	.30	.20	.36
8	.25	.70	1.7	3.3	4.9	1.5	.70	.47	.41	.30	.22	.32
9	.25	.80	1.7	3.2	3.9	1.7	.61	.41	.36	.25	.22	.32
10	.25	.80	1.7	3.1	3.5	1.9	.61	.41	.36	.26	.19	.32
11	.28	.90	1.9	2.8	2.8	1.7	.80	.36	.36	.29	.19	.32
12	.25	.90	1.9	2.8	2.8	1.5	.61	.36	.41	.29	.19	.32
13	.25	1.5	2.2	2.8	2.4	1.4	.61	.32	.41	.28	.19	.32
14	.25	1.5	1.9	2.8	2.8	1.4	.61	.32	.47	.23	.19	.32
15	.25	1.4	1.7	2.8	2.4	1.2	.47	.36	.41	.23	.19	.32
16	.25	1.4	1.5	2.8	2.4	1.2	.41	.44	.36	.26	.19	.36
17	.28	1.4	1.5	2.8	2.4	1.2	.41	.53	.36	.29	.19	.32
18	.25	1.4	1.5	2.8	2.4	.90	.47	.53	.36	.26	.19	.32
19	.25	1.4	1.5	2.8	2.2	.90	.53	.53	.36	.29	.19	.32
20	.25	1.4	1.5	2.8	2.2	.90	.53	.53	.36	.31	.19	.32
21	.25	1.4	1.5	2.8	2.2	.90	.47	.61	.32	.33	.19	.32
22	.25	1.4	3.1	2.8	2.2	1.0	.53	.47	.36	.36	.19	.28
23	.25	1.4	5.5	2.8	1.9	1.0	.53	.47	.36	.32	.19	.28
24	.25	1.4	7.3	2.8	2.2	1.0	.53	.47	.32	.32	.22	.32
25	.28	1.4	15	2.8	1.9	.90	.61	.47	.32	.29	.22	.32
26	.36	1.4	31	3.1	2.2	.90	.61	.47	.32	.30	.22	.32
27	.47	1.4	50	3.9	1.9	1.2	.61	.47	.28	.30	.25	.36
28	.53	1.4	17	4.4	1.9	1.2	.53	.36	.28	.26	.25	.36
29	.53	1.4	6.7	3.9	1.9	1.2	.53	.36	.28	.28	.22	.36
30	.61	1.4	5.5	3.5	------	1.0	.47	.36	.28	.29	.22	.32
31	.53	------	5.1	3.1	------	.90	------	.41	------	.28	.22	------
TOTAL	9.64	34.40	183.5	101.2	84.4	41.50	18.20	13.78	10.78	8.87	6.62	9.47
MEAN	.31	1.15	5.92	3.26	2.91	1.34	.61	.44	.36	.29	.21	.32
MAX	.61	1.5	50	4.7	6.7	1.9	.90	.61	.47	.36	.27	.36
MIN	.25	.70	1.4	2.8	1.9	.90	.41	.32	.28	.23	.19	.25
AC-FT	19	68	364	201	167	82	36	27	21	18	13	19

CAL YR 1971 TOTAL 845.38 MEAN 2.32 MAX 50 MIN .25 AC-FT 1,680
WTR YR 1972 TOTAL 522.36 MEAN 1.43 MAX 50 MIN .19 AC-FT 1,040

PEAK DISCHARGE (BASE, 250 CFS).--Dec. 27 (1230) 459 cfs (5.98 ft).

11151700 SALINAS RIVER AT SOLEDAD, CALIF.

LOCATION.--Lat 36°24'40", long 121°19'06", on boundary between San Vicente and Los Coches Grants, Monterey County, near right bank on upstream end of pier on U.S. Highway 101, 0.9 mile south of Soledad, and 1 mile upstream from Arroyo Seco.

DRAINAGE AREA.--3,563 sq mi.

PERIOD OF RECORD.--October 1968 to current year.

GAGE.--Water-stage recorder. Altitude of gage is 170 ft (from topographic map).

EXTREMES.--Current year: Maximum discharge, 289 cfs Apr. 6 (gage height, 9.24 ft); minimum daily, 6.0 cfs Mar. 14, 15.
Period of record: Maximum discharge, 106,000 cfs Feb. 25, 1969 (gage height, 23.31 ft); maximum gage height, 23.39 ft Jan. 26, 1969; minimum daily discharge, 6.0 cfs Mar. 14, 15, 1972.

REMARKS.--Records fair. Flow partly regulated by Santa Margarita Lake (see sta 11144500), Nacimiento Reservoir (see sta 11149300), and San Antonio Reservoir (see sta 11150100). Several small diversions above station. Records of chemical analyses for the current year are published in Part 2 of this report.

DISCHARGE, IN CUBIC FEET PER SECOND, WATER YEAR OCTOBER 1971 TO SEPTEMBER 1972

DAY	OCT	NOV	DEC	JAN	FEB	MAR	APR	MAY	JUN	JUL	AUG	SEP
1	277	100	85	71	32	9.1	194	105	114	123	177	173
2	276	110	87	67	29	8.5	214	105	119	123	185	186
3	271	100	91	63	28	8.5	249	102	121	136	198	188
4	269	93	96	60	28	8.5	261	100	123	137	150	206
5	267	83	98	56	30	7.8	273	114	123	143	167	224
6	265	71	100	54	29	7.8	286	121	121	141	146	230
7	260	67	98	44	29	7.2	270	131	126	134	174	222
8	257	67	98	43	29	7.2	237	135	131	125	184	231
9	248	63	98	40	29	7.2	232	138	131	122	194	232
10	240	60	98	38	29	7.2	234	138	128	129	213	238
11	224	54	98	37	28	6.8	234	135	126	128	220	240
12	215	69	94	36	27	6.4	229	133	131	122	220	238
13	208	75	96	34	26	6.4	226	141	128	127	224	234
14	204	83	98	33	26	6.0	208	148	116	129	230	225
15	200	83	98	33	23	6.0	176	156	109	141	228	229
16	200	77	94	32	22	8.5	162	159	116	139	225	233
17	194	73	85	33	21	22	159	154	121	156	226	230
18	181	71	81	33	20	32	156	156	116	159	227	221
19	170	69	71	33	19	51	151	156	126	125	227	210
20	154	69	69	32	18	60	148	154	128	100	225	205
21	142	69	71	30	17	67	141	151	128	140	237	207
22	104	71	83	30	16	69	131	154	121	154	235	206
23	97	73	81	30	14	77	123	154	131	159	229	205
24	98	75	83	29	13	75	123	154	131	172	224	204
25	100	79	119	29	12	73	121	154	123	175	227	198
26	92	81	96	29	10	77	114	146	143	175	224	196
27	86	81	114	30	9.7	111	111	131	143	168	227	183
28	86	81	123	32	9.7	148	105	121	137	165	237	184
29	86	83	107	30	9.1	168	107	116	132	157	236	177
30	90	83	87	30	------	179	105	114	131	161	224	155
31	96	------	77	30	------	174	------	109	------	176	159	------
TOTAL	5,657	2,313	2,874	1,201	632.5	1,502.1	5,480	4,185	3,774	4,441	6,499	6,310
MEAN	182	77.1	92.7	38.7	21.8	48.5	183	135	126	143	210	210
MAX	277	110	123	71	32	179	286	159	143	176	237	240
MIN	86	54	69	29	9.1	6.0	105	100	109	100	146	155
AC-FT	11,220	4,590	5,700	2,380	1,250	2,980	10,870	8,300	7,490	8,810	12,890	12,520

CAL YR 1971 TOTAL 46,905.0 MEAN 129 MAX 1,300 MIN 15 AC-FT 93,040
WTR YR 1972 TOTAL 44,868.6 MEAN 123 MAX 286 MIN 6.0 AC-FT 89,000

11151870 ARROYO SECO NEAR GREENFIELD, CALIF.

LOCATION.--Lat 36°14'15", long 121°28'50", in NE¼SE¼ sec.36, T.19 S., R.4 E., Monterey County, on right bank 0.6 mile downstream from Rocky Creek, and 14.5 miles southwest of Greenfield.

DRAINAGE AREA.--113 sq mi.

PERIOD OF RECORD.--October 1961 to current year.

GAGE.--Water-stage recorder. Altitude of gage is 780 ft (from topographic map). Prior to Aug. 27, 1970, at datum 2.00 ft higher.

AVERAGE DISCHARGE.--11 years, 131 cfs (94,910 acre-ft per year); median of yearly mean discharges, 120 cfs (86,900 acre-ft per year).

EXTREMES.--Current year: Maximum discharge, 3,720 cfs Dec. 25 (gage height, 9.26 ft); no flow many days. Period of record: Maximum discharge, 21,800 cfs Dec. 6, 1966 (gage height, 14.50 ft, present datum), from rating curve extended above 3,100 cfs on basis of slope-area measurement at gage-height 12.65 ft, present datum; no flow at times.

REMARKS.--Records good. No regulation; small diversion for fishponds above station by pumping. Records of water temperatures and suspended-sediment discharge for the current year are published in Part 2 of this report.

REVISIONS (WATER YEARS).--WRD Calif. 1967: 1966. WRD Calif. 1969: 1967(P).

DISCHARGE, IN CUBIC FEET PER SECOND, WATER YEAR OCTOBER 1971 TO SEPTEMBER 1972

DAY	OCT	NOV	DEC	JAN	FEB	MAR	APR	MAY	JUN	JUL	AUG	SEP
1	2.4	5.6	10	106	51	40	31	17	5.2	1.8	.17	0
2	2.5	5.8	14	95	49	40	26	15	5.0	1.1	.09	0
3	2.6	6.0	27	91	47	39	24	14	4.7	.96	.04	0
4	2.6	5.8	24	82	47	39	23	13	4.4	1.0	.01	0
5	2.6	5.6	19	75	375	37	24	12	4.3	.83	0	0
6	2.4	5.6	16	71	300	36	24	13	3.9	.80	0	0
7	2.3	5.4	14	67	197	34	24	13	3.7	.64	0	.01
8	2.3	5.4	13	63	157	33	22	12	4.0	.53	0	.06
9	2.1	5.2	13	59	133	31	21	12	3.9	.44	0	.07
10	2.1	5.4	13	56	118	31	22	12	4.2	.36	0	.02
11	1.9	14	14	54	105	32	44	11	4.4	.36	0	.13
12	1.9	39	16	52	95	36	48	11	4.3	.31	0	.22
13	1.9	23	37	51	87	34	51	10	3.9	.28	0	.22
14	1.8	14	26	50	82	33	36	9.4	3.5	.22	0	.25
15	1.8	11	21	49	75	33	30	9.1	3.2	.12	0	.25
16	1.9	8.9	19	47	71	31	27	8.2	2.9	.10	0	.41
17	2.3	8.2	17	47	68	31	25	8.0	2.6	.08	0	.61
18	2.9	7.7	16	45	64	29	24	8.5	2.7	.07	0	.62
19	3.6	7.4	16	44	59	31	23	9.0	2.4	.07	0	.66
20	3.8	7.2	16	43	57	32	22	10	2.3	.07	0	.70
21	3.8	7.4	16	42	54	31	21	10	2.2	.09	0	.70
22	3.8	7.2	602	40	54	31	20	9.5	1.9	.12	0	.67
23	3.8	7.2	213	40	51	31	20	9.9	2.1	.16	0	.79
24	3.8	7.2	393	39	50	32	20	9.1	2.3	.21	0	.95
25	3.8	7.2	1,270	40	47	32	21	8.8	2.6	.54	0	.98
26	4.1	7.2	405	44	47	31	20	8.4	2.6	.78	0	.76
27	4.2	7.7	564	87	45	31	20	8.0	2.5	.66	0	.86
28	4.4	8.9	318	85	44	32	18	7.4	2.2	.53	0	.95
29	4.4	10	204	63	42	32	17	6.6	2.0	.39	0	1.2
30	4.7	11	151	58	------	32	18	5.9	1.7	.35	0	1.4
31	5.0	------	126	54	------	31	------	5.4	------	.30	0	------
TOTAL	93.5	277.2	4,623	1,839	2,671	1,028	766	316.2	97.6	14.27	.31	13.49
MEAN	3.02	9.24	149	59.3	92.1	33.2	25.5	10.2	3.25	.46	.010	.45
MAX	5.0	39	1,270	106	375	40	51	17	5.2	1.8	.17	1.4
MIN	1.8	5.2	10	39	42	29	17	5.4	1.7	.07	0	0
AC-FT	185	550	9,170	3,650	5,300	2,040	1,520	627	194	28	.6	27

CAL YR 1971 TOTAL 17,517.31 MEAN 48.0 MAX 1,270 MIN .55 AC-FT 34,750
WTR YR 1972 TOTAL 11,739.57 MEAN 32.1 MAX 1,270 MIN 0 AC-FT 23,290

PEAK DISCHARGE (BASE, 1,500 CFS).--Dec. 22 (1315) 1,710 cfs (7.65 ft); Dec. 25 (0800) 3,720 cfs (9.26 ft).

11152000 ARROYO SECO NEAR SOLEDAD, CALIF.

LOCATION.--Lat 36°16'50", long 121°19'20", in SW¼NE¼ sec.16, T.19 S., R.6 E., Monterey County, on right bank just downstream from bridge, 1.5 miles downstream from Vaquero Creek, and 10 miles south of Soledad.

DRAINAGE AREA.--244 sq mi.

PERIOD OF RECORD.--November 1901 to current year. Records for water year 1902 incomplete, yearly estimate published in WSP 1315-B.

GAGE.--Water-stage recorder. Datum of gage is 342.20 ft above mean sea level (Corps of Engineers bench mark). Prior to June 16, 1929, nonrecording gage, and June 16, 1929, to Dec. 2, 1941, water-stage recorder at site 1 mile upstream at different datum. Dec. 3, 1941, to Sept. 30, 1959, water-stage recorder at datum 2.00 ft higher. Jan. 30 to Mar. 26, 1969, nonrecording gage at bridge at same datum.

AVERAGE DISCHARGE.--71 years, 160 cfs (115,900 acre-ft per year); median of yearly mean discharges, 120 cfs (86,900 acre-ft per year).

EXTREMES.--Current year: Maximum discharge, 4,540 cfs Dec. 25 (gage height, 8.59 ft); no flow for several months.

Period of record: Maximum discharge, 28,300 cfs Apr. 3, 1958 (gage height, 16.40 ft, present datum), from rating curve extended above 12,000 cfs on basis of slope-area measurement at gage height 16.30 ft; no flow at times during several years.

REMARKS.--Records good. No regulation or large diversion above station.

REVISIONS (WATER YEARS).--WSP 881: 1902-9 (yearly summary only). WSP 1565: 1916-19, 1920-21(M), 1922, 1926-27, 1928-30(M), 1932, 1934, 1936(M). WSP 1715: Drainage area.

DISCHARGE, IN CUBIC FEET PER SECOND, WATER YEAR OCTOBER 1971 TO SEPTEMBER 1972

DAY	OCT	NOV	DEC	JAN	FEB	MAR	APR	MAY	JUN	JUL	AUG	SEP
1		0	7.6	117	54	49	19	15	8.2	.49		
2		0	8.4	106	51	47	19	14	7.7	.40		
3		0	15	101	50	46	19	13	7.3	.32		
4		0	22	94	48	44	19	12	6.9	.18		
5		.45	21	88	299	43	18	13	6.3	.06		
6		2.0	16	82	375	42	20	12	5.8	0		
7		3.0	14	78	214	38	21	13	4.4	0		
8		3.4	13	72	174	37	18	12	4.7	0		
9		3.4	12	70	147	36	18	13	5.3	0		
10		3.4	11	67	128	35	18	14	5.4	0		
11		4.8	11	63	112	34	20	13	5.1	0		
12		32	11	61	103	33	58	11	5.0	0		
13		27	20	61	94	31	48	11	5.3	0		
14		18	35	60	88	30	46	9.2	4.9	0		
15		14	22	58	86	29	34	9.0	4.6	0		
16		10	18	56	80	28	30	8.1	3.9	0		
17		7.6	16	54	76	26	26	7.7	3.4	0		
18		6.9	15	53	72	25	25	7.7	2.8	0		
19		6.3	14	51	70	24	23	8.8	2.4	0		
20		5.8	14	50	67	23	22	9.9	2.3	0		
21		5.8	14	50	65	23	22	12	2.0	0		
22		5.8	672	48	63	23	21	13	1.7	0		
23		5.8	334	46	61	22	21	13	1.5	0		
24		5.8	352	46	60	22	20	14	1.6	0		
25		5.8	1,800	45	58	23	19	13	1.4	0		
26		6.3	632	50	56	22	19	13	1.2	0		
27		4.8	839	67	54	21	18	13	1.0	0		
28		5.8	405	112	53	21	16	12	.90	0		
29		6.9	232	72	51	21	16	9.8	.73	0		
30		6.3	177	63	------	21	15	8.6	.55	0		
31		------	141	60	------	21	------	8.6	------	0		------
TOTAL	0	207.15	5,914.0	2,101	2,909	940	708	356.4	114.28	1.45	0	0
MEAN	0	6.91	191	67.8	100	30.3	23.6	11.5	3.81	.047	0	0
MAX	0	32	1,800	117	375	49	58	15	8.2	.49	0	0
MIN	0	0	7.6	45	48	21	15	7.7	.55	0	0	0
AC-FT	0	411	11,730	4,170	5,770	1,860	1,400	707	227	2.9	0	0

CAL YR 1971 TOTAL 20,754.80 MEAN 56.9 MAX 1,800 MIN 0 AC-FT 41,170
WTR YR 1972 TOTAL 13,251.28 MEAN 36.2 MAX 1,800 MIN 0 AC-FT 26,280

PEAK DISCHARGE (BASE, 2,500 CFS).--Dec. 25 (1030) 4,540 cfs (8.59 ft).

11152500 SALINAS RIVER NEAR SPRECKELS, CALIF.

LOCATION.--Lat 36°37'52", long 121°40'17", in Nacional Grant, Monterey County, on right bank on downstream side of bridge on Salinas-Monterey highway, 0.8 mile upstream from El Toro Creek, 1.6 miles northwest of Spreckels, and 2 miles south of Salinas.

DRAINAGE AREA.--4,156 sq mi.

PERIOD OF RECORD.--January 1900 to August 1901, October 1929 to current year. Records for water year 1930 incomplete, yearly estimate published in WSP 1315-B. Published as "near Salinas" 1900-1901.

GAGE.--Water-stage recorder. Datum of gage is 20.56 ft above mean sea level. 1900-1901, May 10 to July 29, 1940, nonrecording gages at site 0.3 mile downstream at different datum. July 29, 1940, to May 22, 1969, water-stage recorder at site 0.3 mile downstream at datum 0.69 ft lower. May 23, 1969, to Jan. 13, 1970, nonrecording gage at same site and datum. Mar. 17, 1941, to June 30, 1961, supplementary nonrecording gages, July 1, 1961, to May 22, 1969, auxiliary water-stage recorder at site 0.3 mile downstream at datum 0.69 ft lower.

AVERAGE DISCHARGE.--43 years (1929-72), 404 cfs (292,700 acre-ft per year).

EXTREMES.--Current year: Maximum discharge, 770 cfs Dec. 27 (gage height, 7.41 ft); minimum daily, 0.45 cfs Apr. 29.
Period of record: Maximum discharge, 83,100 cfs Feb. 26, 1969 (gage height, 26.51 ft, site and datum then in use); maximum gage height, 26.85 ft Jan. 16, 1952, site and datum then in use from floodmarks; no flow at times in 1929-40.

REMARKS.--Records poor. Large withdrawals from ground water and small surface-water diversions for municipal use and irrigation of about 95,000 acres above station. Low flow represents waste water from Spreckels sugar refinery and Alisal sewage disposal plant. Flow partly regulated by Nacimiento Reservoir beginning in February 1957 (see sta 11149300) and San Antonio Reservoir beginning in December 1965 (see sta 11150100). Records of chemical analyses, water temperatures, and suspended-sediment discharge for the current year are published in Part 2 of this report.

REVISIONS (WATER YEARS).--WSP 1565: 1930, 1935, 1945. WSP 1715: 1959.

DISCHARGE, IN CUBIC FEET PER SECOND, WATER YEAR OCTOBER 1971 TO SEPTEMBER 1972

DAY	OCT	NOV	DEC	JAN	FEB	MAR	APR	MAY	JUN	JUL	AUG	SEP
1	7.5	2.8	6.8	53	5.5	2.8	1.3	.52	2.4	1.9	2.2	3.6
2	13	3.1	7.5	40	5.5	3.1	2.8	.61	2.4	2.2	2.1	3.6
3	20	3.7	7.2	33	5.8	3.1	5.5	.61	2.6	2.6	2.0	3.4
4	24	3.9	7.2	25	5.8	3.1	9.0	.61	2.4	2.8	2.2	3.5
5	28	4.8	7.2	15	6.5	3.3	10	.61	2.2	3.3	2.0	4.0
6	31	4.8	6.8	11	5.5	3.7	10	.70	1.9	3.5	1.9	3.7
7	37	4.4	6.1	10	5.5	3.7	14	.80	1.7	3.7	1.6	3.3
8	39	4.4	6.1	9.4	5.1	3.7	17	.92	1.5	3.7	1.0	3.1
9	39	4.4	6.5	8.9	5.1	3.5	31	1.0	1.4	4.1	1.0	3.3
10	38	4.4	6.5	8.4	4.4	3.5	37	1.2	1.6	3.9	1.2	3.5
11	28	6.1	6.8	8.0	3.9	3.5	44	.92	1.6	4.1	1.2	3.6
12	23	6.5	6.5	7.5	3.7	3.9	55	.92	1.8	4.4	1.3	4.1
13	20	4.1	6.8	7.5	4.4	3.1	65	1.0	2.0	4.4	1.5	3.9
14	18	5.1	6.5	6.8	4.1	3.1	68	1.2	1.9	4.8	1.6	3.7
15	13	4.8	6.5	6.1	4.4	3.7	70	1.2	1.9	5.1	1.9	3.6
16	15	5.1	6.1	6.1	4.4	3.3	50	1.3	1.9	5.1	1.8	3.8
17	18	5.1	6.8	6.1	4.8	3.7	31	1.4	1.8	5.5	2.0	3.3
18	19	5.1	7.2	6.5	4.1	3.5	25	1.5	1.9	5.1	2.1	3.3
19	11	5.8	6.8	6.5	3.9	2.6	21	1.4	2.2	4.8	2.4	3.2
20	6.5	5.8	7.2	6.8	4.1	2.6	15	1.5	2.0	4.3	2.4	3.2
21	3.5	5.8	7.2	6.8	3.9	2.6	12	1.5	1.9	3.8	2.6	3.2
22	3.1	6.1	8.5	6.8	3.5	.80	10	1.5	1.8	3.3	2.7	3.3
23	2.8	6.5	6.8	7.5	3.9	3.0	7.2	1.4	1.8	2.8	2.9	3.3
24	2.6	6.5	7.5	7.2	3.7	2.0	2.6	1.4	1.6	2.4	2.9	3.2
25	2.4	5.8	9.0	7.5	3.5	2.2	1.2	1.3	1.6	1.9	3.0	3.1
26	2.2	7.2	33	7.2	3.7	2.2	.70	1.4	1.5	1.4	3.2	2.9
27	2.2	5.8	591	8.0	3.5	2.2	.52	1.5	1.4	1.6	3.1	2.8
28	2.2	12	359	6.8	3.3	2.2	.52	1.6	1.2	1.9	3.2	2.7
29	2.2	6.5	387	6.5	3.3	2.4	.45	1.6	1.3	2.0	3.3	2.6
30	2.2	6.8	202	6.1	------	2.0	.52	1.9	1.6	2.4	3.4	2.5
31	2.6	------	91	5.5	------	1.4	------	2.0	------	2.4	3.4	------
TOTAL	476.0	163.2	1,837.1	357.5	128.8	89.50	617.31	37.02	54.8	105.2	69.1	100.3
MEAN	15.4	5.44	59.3	11.5	4.44	2.89	20.6	1.19	1.83	3.39	2.23	3.34
MAX	39	12	591	53	6.5	3.9	70	2.0	2.6	5.5	3.4	4.1
MIN	2.2	2.8	6.1	5.5	3.3	.80	.45	.52	1.2	1.4	1.0	2.5
AC-FT	944	324	3,640	709	255	178	1,220	73	109	209	137	199

CAL YR 1971 TOTAL 12,104.70 MEAN 33.2 MAX 601 MIN 1.4 AC-FT 24,010
WTR YR 1972 TOTAL 4,035.83 MEAN 11.0 MAX 591 MIN .45 AC-FT 8,010

11152540 EL TORO CREEK NEAR SPRECKELS, CALIF.

LOCATION.--Lat 36°35'00", long 121°42'50", in El Toro Grant, Monterey County, on right bank 0.3 mile downstream from San Benancio Gulch, and 4.7 miles southwest of Spreckels.

DRAINAGE AREA.--31.9 sq mi.

PERIOD OF RECORD.--October 1961 to current year.

GAGE.--Water-stage recorder and concrete control. Altitude of gage is 210 ft (from topographic map).

AVERAGE DISCHARGE.--11 years, 1.28 cfs (927 acre-ft per year); median of yearly mean discharges, 0.4 cfs (290 acre-ft per year).

EXTREMES.--Current year: Maximum discharge, 8.0 cfs Dec. 25 (gage height, 3.51 ft); no flow for several days. Period of record: Maximum discharge, 626 cfs Jan. 26, 1969 (gage height, 5.99 ft), from rating curve extended above 82 cfs on basis of slope-area measurement of maximum flow; no flow for many days in most years.

REMARKS.--Records fair. No regulation or diversion above station except for minor stock ponds.

DISCHARGE, IN CUBIC FEET PER SECOND, WATER YEAR OCTOBER 1971 TO SEPTEMBER 1972

DAY	OCT	NOV	DEC	JAN	FEB	MAR	APR	MAY	JUN	JUL	AUG	SEP
1	.03	.36	.11	.14	.17	.14	.11	.07	.02	.01	.01	.01
2	.02	.36	.14	.11	.17	.11	.11	.07	.09	.01	.01	.01
3	.02	.30	.14	.11	.17	.11	.11	.09	.02	.01	.02	.01
4	.02	.30	.14	.11	.17	.11	.11	.09	.02	.01	.01	.02
5	.02	.30	.14	.11	.42	.11	.11	.11	.04	.01	.01	.02
6	.02	.30	.11	.11	.21	.11	.14	.09	.02	.01	.01	.02
7	.03	.30	.11	.11	.17	.11	.09	.11	.05	.01	.01	.01
8	.04	.25	.11	.11	.17	.11	.11	.09	.03	.01	.01	.01
9	.04	.14	.11	.11	.17	.11	.11	.09	.04	.01	.01	.01
10	.05	.17	.14	.11	.17	.11	.11	.09	.03	0	.01	.01
11	.05	.42	.14	.11	.17	.11	.11	.06	.02	.01	.01	.01
12	.07	.85	.14	.11	.17	.11	.11	.02	.03	.01	0	.01
13	.04	.75	.14	.11	.17	.11	.14	.02	.02	.01	0	.01
14	.05	.25	.11	.11	.17	.11	.11	.02	.01	.01	0	.01
15	.07	.06	.11	.11	.17	.09	.11	.02	.09	0	0	.03
16	.09	.04	.11	.11	.17	.09	.11	.02	.21	.02	0	.02
17	.09	.04	.11	.11	.17	.09	.11	.02	.03	.02	.01	.02
18	.07	.03	.11	.11	.17	.09	.11	.03	.02	.02	.01	.02
19	.05	.03	.09	.11	.21	.09	.09	.03	.03	.02	.01	.02
20	.05	.03	.11	.11	.17	.09	.09	.03	.02	.02	.01	.01
21	.05	.04	.14	.11	.17	.11	.11	.02	.02	.02	.01	.01
22	.14	.05	.21	.11	.14	.11	.11	.03	.02	.02	0	.01
23	.42	.05	.14	.14	.14	.11	.11	.03	.02	.02	0	.01
24	.30	.05	.14	.11	.14	.11	.11	.03	.02	.01	.01	.01
25	.30	.05	1.6	.14	.14	.11	.11	.03	.02	.01	.01	.01
26	.36	.07	.49	.17	.14	.14	.09	.03	.02	.01	.01	.02
27	.36	.07	.96	.49	.14	.11	.09	.07	.01	.01	.01	.02
28	.36	.25	.21	.17	.14	.11	.09	.03	.01	.01	.01	.02
29	.30	.11	.21	.17	.14	.11	.09	.02	.01	.01	.01	.02
30	.36	.09	.17	.17	------	.11	.07	.02	.01	.01	.01	.02
31	.36	------	.17	.17	------	.11	------	.03	------	.01	.01	------
TOTAL	4.23	6.11	6.86	4.18	5.02	3.35	3.18	1.51	1.00	.37	.25	.44
MEAN	.14	.20	.22	.13	.17	.11	.11	.049	.033	.012	.008	.015
MAX	.42	.85	1.6	.49	.42	.14	.14	.11	.21	.02	.02	.03
MIN	.02	.03	.09	.11	.14	.09	.07	.02	.01	0	0	.01
AC-FT	8.4	12	14	8.3	10.0	6.6	6.3	3.0	2.0	.7	.5	.9

CAL YR 1971 TOTAL 101.20 MEAN .28 MAX 14 MIN 0 AC-FT 201
WTR YR 1972 TOTAL 36.50 MEAN .10 MAX 1.6 MIN 0 AC-FT 72

PEAK DISCHARGE (BASE, 10 CFS).--No peak above base.

11152570 ALISAL CREEK NEAR SALINAS, CALIF.

LOCATION.--Lat 36°41'33", long 121°34'04", in El Alisal (Bernal) Grant, Monterey County, on left bank at upstream side of Old Stage Road bridge, 5.1 miles northeast of Salinas.

DRAINAGE AREA.--14.2 sq mi.

PERIOD OF RECORD.--October 1970 to current year.

GAGE.--Water-stage recorder. Altitude of gage is 200 ft (from topographic map).

EXTREMES.--Current year: No flow during year.
Period of record: Maximum discharge, 31 cfs Dec. 21, 1970 (gage height, 4.32 ft, from recorded range in stage); no flow for most of each year.

REMARKS.--No flow since Jan. 15, 1971. Small reservoir 200 ft upstream diverts water for irrigation during most flow periods. Reservoir controls all but high flows. Figures for calendar year 1971 are as follows: Total, 8.85 cfs; maximum daily discharge, 4.0 cfs; minimum, zero; mean, 0.024 cfs; runoff, 18 acre-ft.

11152600 GABILAN CREEK NEAR SALINAS, CALIF.

LOCATION.--Lat 36°45'21", long 121°36'34", in La Natividad Grant, Monterey County, on right bank at downstream side of county road bridge, 0.3 mile downstream from small left-bank tributary, and 6.2 miles northeast of Salinas.

DRAINAGE AREA.--36.7 sq mi.

PERIOD OF RECORD.--October 1970 to current year.

GAGE.--Water-stage recorder. Altitude of gage is 200 ft (from topographic map).

EXTREMES.--Current year: No flow during year.
Period of record: Maximum discharge, 54 cfs Dec. 21, 1970 (gage height, 1.75 ft); no flow for most of each year.

REMARKS.--No flow since Apr. 24, 1971. No regulation or diversion above station. Figures for calendar year 1971 are as follows: Total, 86.22 cfs; maximum daily discharge, 12 cfs; minimum, zero; mean, 0.24 cfs; runoff, 171 acre-ft.

PEAK DISCHARGE (BASE, 60 CFS).--No peak above base.

11152650 RECLAMATION DITCH NEAR SALINAS, CALIF.

LOCATION.--Lat 36°42'18", long 121°42'14", in Rincon Del Zanjon Grant, Monterey County, on right bank at upstream side of San Jon Road bridge, and 3.4 miles northwest of Salinas.

PERIOD OF RECORD.--October 1970 to current year.

GAGE.--Water-stage recorder and concrete control. Altitude of gage is 30 ft (from topographic map).

EXTREMES.--Period of record: Maximum daily discharge, 96 cfs Dec. 22, 1970; minimum daily, 0.47 cfs Oct. 12, 1970.

REMARKS.--Records fair. Flow mostly from pumps that drain Carr Lake area for farming.

DISCHARGE, IN CUBIC FEET PER SECOND, WATER YEAR OCTOBER 1971 TO SEPTEMBER 1972

DAY	OCT	NOV	DEC	JAN	FEB	MAR	APR	MAY	JUN	JUL	AUG	SEP
1	7.7	2.3	5.1	1.8	1.4	1.5	1.2	5.7	1.6	7.7	5.3	7.5
2	6.8	2.9	8.7	.34	1.4	1.9	1.2	6.0	2.0	4.5	6.1	7.1
3	4.8	2.6	7.0	5.0	1.3	2.3	1.2	6.0	5.7	5.7	7.1	6.8
4	3.0	2.5	4.4	11	1.4	2.4	1.2	6.0	2.6	5.9	5.3	4.2
5	6.2	2.3	3.2	2.6	21	1.7	1.1	6.0	3.3	6.6	4.8	3.6
6	8.0	2.3	2.6	5.7	2.7	1.6	1.1	6.0	5.3	9.1	4.5	5.9
7	7.1	1.2	3.7	3.8	1.7	3.6	2.9	6.0	7.1	13	2.9	5.1
8	7.1	.90	3.7	2.5	1.1	4.7	6.1	6.0	5.3	12	4.8	4.8
9	6.8	2.8	4.1	1.9	1.9	6.6	4.4	6.0	7.5	6.2	5.3	5.0
10	3.7	2.7	4.7	2.4	1.3	2.1	3.9	6.0	5.3	6.1	6.6	3.9
11	2.0	4.2	5.1	2.9	1.7	.82	6.6	6.0	5.0	8.9	7.0	3.3
12	4.5	15	5.6	2.4	.90	.90	5.1	6.0	5.1	8.7	6.6	5.4
13	5.6	8.9	6.1	2.4	.62	.82	6.8	6.0	6.2	12	5.1	5.1
14	6.1	5.3	4.1	2.4	.72	.90	5.7	6.0	6.8	7.1	3.3	5.4
15	5.9	4.1	4.2	2.1	.82	1.1	5.4	6.0	5.1	8.9	5.1	5.4
16	4.8	10	4.2	1.7	1.3	1.1	5.4	6.0	3.6	6.4	8.0	5.4
17	2.2	7.3	2.8	1.3	1.7	1.1	4.1	6.0	3.3	4.8	4.8	2.5
18	1.2	6.8	3.4	1.7	1.9	1.1	6.4	6.0	2.7	4.8	5.6	4.2
19	3.2	7.5	2.0	2.3	1.5	1.1	6.2	8.4	4.1	6.2	8.4	4.4
20	2.9	7.0	2.0	2.8	.62	1.3	6.1	3.8	4.4	9.3	6.1	5.6
21	3.9	4.5	2.7	2.8	.62	1.3	5.3	4.4	7.5	6.4	4.8	5.4
22	5.1	4.7	12	1.6	1.2	1.3	4.5	6.1	6.4	8.0	7.0	6.2
23	4.5	5.9	7.1	5.9	1.8	1.3	3.0	6.4	5.0	6.1	8.0	6.4
24	1.7	6.2	4.4	2.1	2.0	1.3	5.4	7.1	4.7	5.0	7.5	3.3
25	1.3	4.8	22	3.0	3.3	1.3	7.0	6.1	2.9	6.1	7.3	3.6
26	3.8	4.8	19	5.6	2.8	1.3	7.5	4.8	6.2	6.8	7.5	5.4
27	5.3	5.6	25	12	1.6	1.3	8.2	5.1	6.4	6.6	6.1	6.2
28	5.1	16	16	4.7	1.4	1.3	5.6	4.4	6.8	6.4	4.4	6.2
29	4.1	7.7	9.3	1.5	2.3	1.3	8.4	3.8	5.6	6.4	6.4	7.1
30	3.3	5.4	5.1	1.4	------	1.2	3.8	1.3	7.1	4.7	7.1	7.5
31	1.9	------	2.9	1.1	------	1.2	------	1.1	------	3.8	7.3	------
TOTAL	139.6	164.20	212.2	100.74	64.00	52.74	140.8	170.5	150.6	220.2	186.1	157.9
MEAN	4.50	5.47	6.85	3.25	2.21	1.70	4.69	5.50	5.02	7.10	6.00	5.26
MAX	8.0	16	25	12	21	6.6	8.4	8.4	7.5	13	8.4	7.5
MIN	1.2	.90	2.0	.34	.62	.82	1.1	1.1	1.6	3.8	2.9	2.5
AC-FT	277	326	421	200	127	105	279	338	299	437	369	313

CAL YR 1971 TOTAL 2,773.40 MEAN 7.60 MAX 25 MIN .90 AC-FT 5,500
WTR YR 1972 TOTAL 1,759.58 MEAN 4.81 MAX 25 MIN .34 AC-FT 3,490

11152900 CEDAR CREEK NEAR BELL STATION, CALIF.

LOCATION.--Lat 37°03'00", long 121°19'35", in San Luis Gonzaga Grant, Santa Clara County, on left bank 0.5 mile upstream from Hagerman Canyon, and 1.3 miles northwest of Bell Station.

DRAINAGE AREA.--12.8 sq mi.

PERIOD OF RECORD.--October 1961 to current year.

GAGE.--Water-stage recorder. Altitude of gage is 390 ft (from topographic map).

AVERAGE DISCHARGE.--11 years, 4.21 cfs (3,050 acre-ft per year); median of yearly mean discharges, 3.5 cfs (2,500 acre-ft per year).

EXTREMES.--Current year: Maximum discharge, 50 cfs Feb. 5 (gage height, 2.11 ft); no flow for many days.
Period of record: Maximum discharge, 3,490 cfs Jan. 31, 1963 (gage height, 6.85 ft), from rating curve extended above 560 cfs on basis of slope-area measurement at gage height 4.66 ft; no flow for several months in each year.

REMARKS.--Records good. No regulation or diversion above station.

DISCHARGE, IN CUBIC FEET PER SECOND, WATER YEAR OCTOBER 1971 TO SEPTEMBER 1972

DAY	OCT	NOV	DEC	JAN	FEB	MAR	APR	MAY	JUN	JUL	AUG	SEP
1	0	.01	.05	.34	.61	.13	.03	.02	.02			
2	0	.01	.13	.28	.46	.13	.03	.02	.02			
3	0	.01	.08	.24	.40	.13	.03	.02	.02			
4	0	.01	.05	.20	.34	.13	.03	.02	.02			
5	0	.01	.04	.20	15	.13	.04	.02	.02			
6	0	.01	.04	.20	12	.11	.04	.02	.02			
7	0	.01	.04	.16	3.9	.11	.03	.02	.02			
8	0	.01	.03	.16	2.2	.08	.03	.02	.03			
9	0	.01	.03	.13	1.6	.08	.02	.02	.03			
10	0	.02	.04	.13	1.1	.08	.02	.02	.04			
11	0	.04	.04	.13	.69	.08	.05	.02	.04			
12	0	.07	.05	.08	.69	.08	.05	.02	.03			
13	0	.03	.07	.11	.61	.08	.04	.01	.02			
14	0	.04	.05	.11	.53	.07	.03	.01	.02			
15	0	.04	.05	.11	.46	.07	.03	.01	.02			
16	0	.04	.05	.11	.40	.07	.03	.01	.02			
17	0	.04	.04	.08	.40	.07	.02	.02	.01			
18	0	.04	.04	.08	.34	.05	.02	.02	.01			
19	0	.04	.04	.08	.28	.05	.02	.02	.01			
20	0	.04	.04	.08	.25	.05	.02	.02	.01			
21	0	.04	.08	.08	.24	.04	.02	.02	.01			
22	0	.04	.40	.08	.24	.04	.02	.02	.01			
23	0	.05	.11	.08	.20	.04	.02	.02	.01			
24	0	.04	.13	.07	.20	.04	.02	.03	.01			
25	0	.04	4.8	.11	.20	.04	.02	.03	.01			
26	0	.04	1.0	.11	.16	.04	.02	.04	.01			
27	0	.04	5.5	3.5	.16	.04	.02	.04	.01			
28	0	.07	2.2	5.9	.16	.04	.02	.04	0			
29	0	.07	.90	2.2	.13	.04	.02	.03	0			
30	0	.05	.53	1.1	------	.03	.02	.02	0			
31	.01	------	.40	.69	------	.03	------	.02	------			------
TOTAL	.01	1.01	17.05	16.93	43.95	2.20	.81	.67	.50	0	0	0
MEAN	.0003	.034	.55	.55	1.52	.071	.027	.022	.017	0	0	0
MAX	.01	.07	5.5	5.9	15	.13	.05	.04	.04	0	0	0
MIN	0	.01	.03	.07	.13	.03	.02	.01	0	0	0	0
AC-FT	.02	2.0	34	34	87	4.4	1.6	1.3	1.0	0	0	0

CAL YR 1971 TOTAL 337.40 MEAN .92 MAX 58 MIN 0 AC-FT 669
WTR YR 1972 TOTAL 83.13 MEAN .23 MAX 15 MIN 0 AC-FT 165

PEAK DISCHARGE (BASE, 150 CFS).--No peak above base.

11153000 PACHECO CREEK NEAR DUNNEVILLE, CALIF.

LOCATION.--Lat 36°58'48", long 121°22'45", in Ausaymas y San Felipe Grant, Santa Clara County, on right bank 350 ft downstream from private road bridge, and 3.3 miles northeast of Dunneville.

DRAINAGE AREA.--146 sq mi.

PERIOD OF RECORD.--October 1939 to current year. Monthly discharge only prior to January 1940, published in WSP 1315-B.

GAGE.--Water-stage recorder. Datum of gage is 230.70 ft above mean sea level. Prior to Nov. 17, 1950, nonrecording gage at site 350 ft upstream at datum 6.00 ft higher and Nov. 17, 1950, to Aug. 18, 1960, at datum 4.00 ft higher.

AVERAGE DISCHARGE.--33 years, 33.2 cfs (24,050 acre-ft per year).

EXTREMES.--Current year: Maximum discharge, 99 cfs Feb. 6 (gage height, 4.82 ft); no flow for several months. Period of record: Maximum discharge, 12,600 cfs Dec. 23, 1955 (gage height, 21.0 ft, present site and datum, from floodmarks), from rating curve extended above 5,400 cfs on basis of slope-area measurement of maximum flow; no flow at times.

REMARKS.--Records good. Flow regulated by Pacheco Lake 9 miles upstream (capacity, 6,150 acre-ft). Small diversions above station for irrigation.

DISCHARGE, IN CUBIC FEET PER SECOND, WATER YEAR OCTOBER 1971 TO SEPTEMBER 1972

DAY	OCT	NOV	DEC	JAN	FEB	MAR	APR	MAY	JUN	JUL	AUG	SEP
1	1.4	.17			0							
2	1.4	.14			0							
3	1.3	.10			0							
4	1.2	.11			0							
5	1.0	.09			0							
6	.96	.03			54							
7	.90	0			21							
8	.90	0			9.7							
9	.77	0			5.0							
10	.77	0			2.9							
11	.77	0			1.6							
12	.67	0			.96							
13	.62	0			.48							
14	.58	0			.29							
15	.54	0			.19							
16	.54	0			.17							
17	.48	0			.17							
18	.38	0			.12							
19	.32	0			0							
20	.32	0			0							
21	.32	0			0							
22	.29	0			0							
23	.29	0			0							
24	.29	0			0							
25	.26	0			0							
26	.26	0			0							
27	.26	0			0							
28	.21	0			0							
29	.21	0			0							
30	.21	0			------							
31	.21	------			------		------		------			------
TOTAL	18.63	.64	0	0	96.58	0	0	0	0	0	0	0
MEAN	.60	.021	0	0	3.33	0	0	0	0	0	0	0
MAX	1.4	.17	0	0	54	0	0	0	0	0	0	0
MIN	.21	0	0	0	0	0	0	0	0	0	0	0
AC-FT	37	1.3	0	0	192	0	0	0	0	0	0	0

CAL YR 1971 TOTAL 2,780.01 MEAN 7.62 MAX 362 MIN 0 AC-FT 5,510
WTR YR 1972 TOTAL 115.85 MEAN .32 MAX 54 MIN 0 AC-FT 230

11153470 LLAGAS CREEK ABOVE CHESBRO RESERVOIR, NEAR MORGAN HILL, CALIF.

LOCATION.--Lat 37°08'54", long 121°46'02", in Pueblo Lands of San Jose Grant, Santa Clara County, on left bank 200 ft upstream from small left-bank tributary, 5.7 miles upstream from Chesbro Dam, and 6.4 miles west of Morgan Hill.

DRAINAGE AREA.--9.61 sq mi.

PERIOD OF RECORD.--October 1971 to September 1972.

GAGE.--Water-stage recorder and concrete control. Altitude of gage is 670 ft (from topographic map).

EXTREMES.--Current year: Maximum discharge, 117 cfs Dec. 27 (gage height, 3.44 ft); no flow for many days.

REMARKS.--Records excellent. No regulation or diversion above station. Records of water temperatures and total-sediment discharge for the current year are published in Part 2 of this report.

DISCHARGE, IN CUBIC FEET PER SECOND, WATER YEAR OCTOBER 1971 TO SEPTEMBER 1972

DAY	OCT	NOV	DEC	JAN	FEB	MAR	APR	MAY	JUN	JUL	AUG	SEP
1		.01	.31	3.8	5.8	2.4	1.0	.54	.15			
2		.01	.86	3.4	5.2	2.2	.99	.55	.12			
3		.01	.74	3.1	4.9	2.2	.95	.53	.08			
4		.01	.56	2.7	4.5	2.2	.92	.49	.08			
5		0	.50	2.5	24	2.1	1.1	.57	.02			
6		0	.48	2.4	15	2.0	1.2	.58	0			
7		0	.42	2.3	11	2.0	1.0	.60	0			
8		.02	.43	2.2	9.3	2.0	.93	.62	0			
9		.04	.47	2.0	8.0	1.9	.89	.61	0			
10		.03	.50	2.0	7.1	1.8	.87	.56	0			
11		.57	.49	2.0	6.3	1.8	1.6	.53	0			
12		.20	.58	1.8	5.8	1.8	1.6	.43	0			
13		.24	.62	1.8	5.3	1.7	1.8	.37	0			
14		.28	.57	1.7	4.9	1.6	1.3	.33	0			
15		.17	.57	1.6	4.4	1.6	1.0	.26	0			
16		.20	.56	1.6	4.1	1.4	.98	.32	0			
17		.20	.48	1.6	3.8	1.4	.93	.33	0			
18		.20	.39	1.6	3.7	1.2	.88	.35	0			
19		.24	.39	1.6	3.5	1.2	.79	.40	0			
20		.28	.43	1.4	3.3	1.2	.95	.39	0			
21		.27	.65	1.4	3.2	1.3	.91	.37	0			
22		.31	8.0	1.4	3.4	1.4	.92	.35	0			
23		.30	5.3	1.4	3.0	1.3	.84	.34	0			
24		.28	19	1.3	2.9	1.2	.77	.33	0			
25		.28	46	2.4	2.9	1.2	.88	.32	0			
26		.28	25	2.2	2.7	1.2	.76	.31	0			
27		.24	48	37	2.7	1.1	.70	.35	0			
28		.32	15	16	2.4	1.1	.65	.30	0			
29		.32	9.0	10	2.4	1.1	.65	.21	0			
30		.32	6.4	7.7	------	1.1	.70	.18	0			
31		------	5.0	6.6	------	1.1	------	.15	------			------
TOTAL	0	5.63	197.70	130.5	165.5	48.8	29.46	12.57	.45	0	0	0
MEAN	0	.19	6.38	4.21	5.71	1.57	.98	.41	.015	0	0	0
MAX	0	.57	48	37	24	2.4	1.8	.62	.15	0	0	0
MIN	0	0	.31	1.3	2.4	1.1	.65	.15	0	0	0	0
AC-FT	0	11	392	259	328	97	58	25	.9	0	0	0

WTR YR 1972 TOTAL 590.61 MEAN 1.61 MAX 48 MIN 0 AC-FT 1,170

PEAK DISCHARGE (BASE, 200 CFS).--No peak above base.

RESERVOIRS IN PAJARO RIVER BASIN, CALIF.

11153480 CHESBRO RESERVOIR.--Lat 37°07'00", long 121°41'34", near southwest boundary of Ojo de Agua de la Coche Grant, Santa Clara County, at left end of dam on Llagas Creek, and 2.5 miles west of Morgan Hill. Drainage area, 19.3 sq mi (revised). Period of record, December 1955 to current year. Monthly contents prior to October 1959 published in WSP 1735. Nonrecording gage read once daily. Datum of gage is at mean sea level (levels by South Santa Clara Valley Water Conservation District). Extremes for current year: Maximum contents observed, 3,780 acre-ft Oct. 1 (elevation, 506.9 ft); minimum observed, 395 acre-ft Sept. 30 (elevation, 478.1 ft). Extremes for period of record: Maximum contents observed, 8,100 acre-ft Feb. 24, 1969 (elevation, 527.4 ft); no contents at times in 1957, 1960-62.

Reservoir is formed by earth- and rockfill dam completed in 1955. Capacity, 7,500 acre-ft between elevations 465 (elevation of outlet gates) and 525 ft (crest of spillway). Reservoir is used for flood control and water released down Llagas Creek for irrigation. Record of contents furnished by Santa Clara County Flood Control and Water District.

11154020 UVAS RESERVOIR.--Lat 37°04'02", long 121°41'25", in Las Uvas Grant, Santa Clara County, at center of dam on Uvas Creek, and 4.8 miles southwest of Morgan Hill. Drainage area, 30.4 sq mi. Period of record, December 1957 to current year. Monthly contents prior to October 1959 published in WSP 1735. Nonrecording gage read once daily. Datum of gage is at mean sea level (levels by South Santa Clara Valley Water Conservation District). Extremes for current year: Maximum contents observed, 2,890 acre-ft Feb. 29 (elevation, 452.10 ft); minimum observed, 336 acre-ft Dec. 22 (elevation, 423.4 ft). Extremes for period of record: Maximum contents observed, 11,030 acre-ft Mar. 16, 1967 (elevation, 490.5 ft); no contents May 18 to Nov. 30, 1961.

Reservoir is formed by earth- and rockfill dam completed in 1957. Capacity, 10,000 acre-ft between elevations 410 (hydraulic gate valves) and 487.5 ft (crest of spillway). Water released down Uvas Creek for irrigation; at times diverted into Llagas Creek 3.6 miles below Chesbro Reservoir for ground-water recharge by percolation. Record of contents furnished by Santa Clara County Flood Control and Water District.

MONTHEND CONTENTS, IN ACRE-FEET (INCLUDING MOMENTARY STORAGE ABOVE SPILLWAY CREST), WATER YEAR OCTOBER 1971 TO SEPTEMBER 1972

Date	Chesbro Reservoir	Uvas Reservoir
Sept. 30, 1971..	3,780	2,630
Oct. 31.....	2,460	1,310
Nov. 30.....	1,900	532
Dec. 31.....	2,330	1,510
Jan. 31, 1972...	2,430	1,930
Feb. 29.....	2,070	2,890
Mar. 31.....	1,490	2,500
Apr. 30.....	1,190	1,950
May 31.....	910	1,590
June 30.....	740	1,320
July 31.....	602	980
Aug. 31.....	482	628
Sept. 30.....	390	392

NOTE.--Contents at 0800 on first day of following month.

11153700 PAJARO RIVER NEAR GILROY, CALIF.

LOCATION.--Lat 36°56'54", long 121°30'40", on boundary between Las Animas and Llano del Tequisquita Grants, Santa Clara County, on right bank 45 ft upstream from bridge on State Highway 25, 0.9 mile downstream from Llagas Creek, and 4.7 miles southeast of Gilroy. Prior to Nov. 17, 1971, at site 45 ft downstream.

DRAINAGE AREA.--399 sq mi.

PERIOD OF RECORD.--March 1959 to current year.

GAGE.--Water-stage recorder. Datum of gage is 123.88 ft above mean sea level (levels by Corps of Engineers). Prior to Nov. 17, 1971, at site 45 ft downstream at same datum.

AVERAGE DISCHARGE.--13 years, 53.2 cfs (38,540 acre-ft per year); median of yearly mean discharges, 22 cfs (15,900 acre-ft per year).

EXTREMES.--Current year: Maximum discharge, 24 cfs Jan. 27 (gage height, 4.21 ft); no flow Oct. 14, 20, 25-29.
Period of record: Maximum discharge, 12,900 cfs Jan. 25, 1969 (gage height, 14.63 ft), from rating curve extended above 4,800 cfs; no flow for many days in 1961-62, 1971.

REMARKS.--Records fair. Flow regulated by Pacheco Lake (capacity, 6,150 acre-ft), Chesbro Reservoir 21 miles upstream (see sta 11153480) and San Felipe Lake. Many diversions above station for irrigation.

DISCHARGE, IN CUBIC FEET PER SECOND, WATER YEAR OCTOBER 1971 TO SEPTEMBER 1972

DAY	OCT	NOV	DEC	JAN	FEB	MAR	APR	MAY	JUN	JUL	AUG	SEP
1	.52	1.8	.66	2.0	9.2	3.6	6.8	4.5	4.6	6.9	2.2	2.4
2	.10	2.1	1.1	2.0	9.2	3.7	6.8	4.7	5.2	7.0	1.7	2.8
3	.10	2.4	1.1	2.2	8.9	3.8	5.8	4.4	5.8	5.9	1.8	4.4
4	3.0	2.3	1.1	2.2	9.2	3.9	4.0	5.2	5.8	4.0	2.2	5.7
5	5.3	1.9	.88	2.2	12	3.8	3.6	5.2	2.9	3.6	2.1	3.6
6	4.3	1.8	.83	2.4	11	4.1	3.3	3.7	4.7	4.3	2.3	3.5
7	5.3	1.8	.76	2.2	10	4.3	2.5	4.1	4.9	3.6	2.0	2.5
8	5.3	1.8	.71	2.2	9.2	4.7	1.8	3.3	5.0	3.2	2.3	2.1
9	4.8	1.8	.88	2.2	9.0	4.8	3.0	3.8	6.1	3.2	2.8	1.7
10	4.8	1.8	1.2	2.2	8.7	4.9	2.8	3.7	5.7	3.2	2.7	2.2
11	2.6	1.8	1.3	2.6	8.6	5.6	3.3	2.1	7.4	2.2	2.3	2.4
12	2.7	1.8	1.4	2.4	8.2	6.4	3.9	2.5	9.0	2.2	2.8	3.5
13	1.4	1.9	1.4	2.4	7.8	6.0	1.5	4.6	8.4	2.6	2.6	3.2
14	0	2.2	1.3	2.8	8.2	6.2	1.1	5.0	5.0	2.2	1.7	3.8
15	.58	2.8	1.3	4.9	8.4	6.6	1.4	5.0	4.8	1.8	2.3	3.5
16	.03	4.6	1.4	5.2	7.9	8.3	2.5	5.6	5.2	1.9	2.7	3.7
17	.07	2.2	1.4	5.2	7.2	6.8	2.7	4.5	4.8	2.1	2.0	3.8
18	2.0	2.2	1.5	5.2	7.2	7.0	1.8	4.4	4.7	2.1	1.5	3.3
19	.05	2.2	1.5	5.2	6.8	6.9	1.9	5.4	3.7	1.9	2.6	3.6
20	0	2.2	1.4	4.9	6.5	6.5	1.3	5.8	5.0	2.1	2.9	2.4
21	1.0	2.0	1.5	4.9	6.6	6.1	1.5	5.4	5.3	2.4	2.6	3.2
22	3.2	2.0	2.6	4.9	6.4	8.9	1.7	6.2	5.0	2.1	2.8	3.0
23	3.2	1.8	2.8	4.9	6.1	8.4	1.9	5.6	5.1	1.9	2.0	3.7
24	.41	1.8	2.0	4.9	6.0	8.0	1.5	5.8	6.9	2.2	2.2	3.9
25	0	1.5	4.2	4.9	5.6	7.7	2.8	7.0	7.4	2.2	2.2	3.1
26	0	1.1	4.4	5.7	5.4	7.6	3.5	4.8	5.5	1.9	2.9	3.2
27	0	.66	2.9	12	4.6	7.1	4.2	6.9	6.1	1.5	3.2	3.8
28	0	.60	2.6	11	4.0	6.6	3.0	5.9	6.1	1.8	2.9	2.9
29	0	.66	2.2	8.9	3.7	6.1	2.4	5.4	7.0	2.3	2.2	3.9
30	.01	.71	2.2	8.9	------	5.2	4.4	4.6	7.1	2.7	2.4	3.0
31	.15	------	2.2	9.2	------	5.5	------	4.8	------	2.7	2.4	------
TOTAL	50.92	56.23	52.72	142.8	221.6	185.1	88.7	149.9	170.2	89.7	73.3	97.8
MEAN	1.64	1.87	1.70	4.61	7.64	5.97	2.96	4.84	5.67	2.89	2.36	3.26
MAX	5.3	4.6	4.4	12	12	8.9	6.8	7.0	9.0	7.0	3.2	5.7
MIN	0	.60	.66	2.0	3.7	3.6	1.1	2.1	2.9	1.5	1.5	1.7
AC-FT	101	112	105	283	440	367	176	297	338	178	145	194

CAL YR 1971 TOTAL 5,958.47 MEAN 16.3 MAX 530 MIN 0 AC-FT 11,820
WTR YR 1972 TOTAL 1,378.97 MEAN 3.77 MAX 12 MIN 0 AC-FT 2,740

PEAK DISCHARGE (BASE, 300 CFS).--No peak above base.

11153900 UVAS CREEK ABOVE UVAS RESERVOIR, NEAR MORGAN HILL, CALIF.

LOCATION.--Lat 37°05'34", long 121°43'02", in Las Uvas Grant, Santa Clara County, on left bank 0.6 mile downstream from Little Uvas Creek, 0.9 mile upstream from Hay Canyon, and 4.4 miles southwest of Morgan Hill.

DRAINAGE AREA.--21.0 sq mi.

PERIOD OF RECORD.--July 1961 to current year.

GAGE.--Water-stage recorder. Datum of gage is 486.47 ft above mean sea level.

AVERAGE DISCHARGE.--11 years, 26.3 cfs (19,050 acre-ft per year).

EXTREMES.--Current year: Maximum discharge, 350 cfs Dec. 27 (gage height, 5.30 ft); minimum daily, 0.03 cfs Sept. 4.
Period of record: Maximum discharge, 6,580 cfs Oct. 13, 1962 (gage height, 13.18 ft); no flow July 12 to Oct. 22, 1961, Oct. 1, 1964.

REMARKS.--Records fair. Minor regulation and diversion above station affects low flows. Records of water temperatures and total-sediment discharge for the current year are published in Part 2 of this report.

DISCHARGE, IN CUBIC FEET PER SECOND, WATER YEAR OCTOBER 1971 TO SEPTEMBER 1972

DAY	OCT	NOV	DEC	JAN	FEB	MAR	APR	MAY	JUN	JUL	AUG	SEP
1	1.1	.80	1.7	9.9	15	6.2	3.4	1.7	.75	.16	.20	.48
2	1.1	.67	4.4	8.5	13	6.1	3.3	1.6	.83	.33	.11	.04
3	.96	.65	3.1	7.2	12	6.1	3.7	1.7	.66	.32	.23	.04
4	.76	.62	2.7	6.3	12	5.9	3.7	1.6	.79	.26	.13	.03
5	.69	.66	2.2	5.6	128	5.6	4.7	1.9	.74	.17	.12	.04
6	.67	.57	2.0	5.3	56	5.3	5.5	2.3	.35	.38	.19	.05
7	.57	.57	1.8	4.9	34	5.2	4.2	2.5	.71	.21	.08	.06
8	.62	.81	1.7	4.5	27	5.1	3.4	1.7	.50	.19	.11	.07
9	.59	.76	1.7	4.3	23	5.3	3.6	2.2	.64	.32	.08	.05
10	.44	.80	1.8	4.0	20	5.3	3.5	1.6	.92	.31	.10	.05
11	.61	4.7	1.8	3.8	17	5.1	5.8	1.6	.83	.22	.08	.11
12	.51	4.2	2.0	3.8	15	4.6	7.4	1.5	.84	.15	.08	.14
13	.46	3.4	2.4	3.6	14	4.7	9.0	1.8	.65	.12	.08	.15
14	.51	2.7	2.0	3.5	13	4.8	6.1	1.4	.73	.09	.09	.16
15	.63	1.8	1.9	3.3	12	4.9	5.1	1.1	.44	.05	.09	.09
16	.54	1.5	1.8	3.3	11	4.5	4.0	.67	.50	.14	.09	.13
17	.65	1.5	1.8	3.1	9.8	4.3	4.4	.20	.34	.09	.19	.10
18	.71	1.5	1.8	3.1	9.3	4.4	3.7	.96	.32	.15	.15	.11
19	.59	1.4	1.7	3.1	8.8	4.1	3.0	1.1	.57	.23	.20	.16
20	.67	1.3	1.7	3.0	8.4	4.3	3.4	1.4	.42	.26	.17	.15
21	.57	1.4	2.2	3.0	8.3	4.5	3.2	1.4	.48	.35	.17	.14
22	.71	1.4	40	2.8	9.4	4.6	2.7	1.4	.39	.32	.24	.13
23	.62	1.5	17	2.3	8.2	4.6	2.6	.79	.44	.26	.12	.12
24	.66	1.5	78	3.0	7.7	4.4	3.2	1.0	.53	.35	.11	.08
25	.78	1.5	124	5.7	7.4	4.7	2.2	.90	.71	.21	.08	.12
26	.38	1.5	67	5.5	7.1	4.4	2.0	.99	.67	.31	.07	.22
27	.66	1.5	139	99	6.9	4.2	1.5	1.5	.39	.15	.10	.43
28	.58	1.6	40	39	6.6	4.0	1.8	1.2	.39	.14	.15	.90
29	.69	1.8	23	25	6.5	3.5	2.0	1.3	.28	.15	.16	.33
30	.66	1.8	16	19	------	3.5	1.9	.90	.16	.17	.08	.15
31	.82	------	12	16	------	3.1	------	.58	------	.21	.07	------
TOTAL	20.51	46.41	600.2	314.4	526.4	147.3	114.0	42.49	16.97	6.77	3.92	4.83
MEAN	.66	1.55	19.4	10.1	18.2	4.75	3.80	1.37	.57	.22	.13	.16
MAX	1.1	4.7	139	99	128	6.2	9.0	2.5	.92	.38	.24	.90
MIN	.38	.57	1.7	2.3	6.5	3.1	1.5	.20	.16	.05	.07	.03
AC-FT	41	92	1,190	624	1,040	292	226	84	34	13	7.8	9.6

CAL YR 1971 TOTAL 3,843.52 MEAN 10.5 MAX 146 MIN .10 AC-FT 7,620
WTR YR 1972 TOTAL 1,844.20 MEAN 5.04 MAX 139 MIN .03 AC-FT 3,660

PEAK DISCHARGE (BASE, 800 CFS).--No peak above base.

11154100 BODFISH CREEK NEAR GILROY, CALIF.

LOCATION.--Lat 37°00'15", long 121°39'58", in Las Animas Grant, Santa Clara County, on left bank just upstream from Whitehurst Creek, 2.7 miles upstream from mouth, and 5.1 miles west of west city limits of Gilroy.

DRAINAGE AREA.--7.40 sq mi.

PERIOD OF RECORD.--October 1959 to current year.

GAGE.--Water-stage recorder and concrete control. Altitude of gage is 360 ft (from topographic map).

AVERAGE DISCHARGE.--13 years, 3.43 cfs (2,480 acre-ft per year); median of yearly mean discharges, 2.2 cfs (1,600 acre-ft per year).

EXTREMES.--Current year: Maximum discharge, 64 cfs Feb. 5 (gage height, 3.69 ft); no flow for several months. Period of record: Maximum discharge, 1,240 cfs Jan. 31, 1963 (gage height, 8.25 ft), from rating curve extended above 580 cfs; no flow at times.

REMARKS.--Records good. No regulation or diversion above station.

REVISIONS (WATER YEARS).--WRD Calif. 1969: 1967(P).

DISCHARGE, IN CUBIC FEET PER SECOND, WATER YEAR OCTOBER 1971 TO SEPTEMBER 1972

DAY	OCT	NOV	DEC	JAN	FEB	MAR	APR	MAY	JUN	JUL	AUG	SEP
1	0	.01	.09	1.1	1.1	.48	.18	.03	0			
2	0	.02	.52	.93	.93	.44	.18	.03	0			
3	0	.02	.36	.61	.81	.44	.16	.03	0			
4	0	.04	.29	.61	.70	.43	.17	.03	0			
5	0	.04	.19	.61	22	.36	.24	.03	0			
6	0	.04	.14	.44	13	.36	.28	.04	0			
7	0	.04	.14	.44	5.2	.36	.20	.03	0			
8	0	.05	.14	.44	3.3	.36	.16	.03	.01			
9	0	.02	.13	.24	2.5	.39	.14	.03	.01			
10	0	.01	.14	.24	1.9	.40	.13	.02	.01			
11	0	.23	.14	.18	1.6	.30	.25	.02	0			
12	0	.33	.24	.18	1.4	.30	.37	.01	0			
13	0	.41	.44	.18	1.2	.30	.41	.01	0			
14	0	.22	.30	.18	1.1	.30	.27	0	0			
15	0	.08	.30	.18	1.0	.30	.24	0	0			
16	0	.05	.24	.18	.93	.24	.21	0	0			
17	0	.05	.24	.18	.81	.18	.21	.01	0			
18	0	.03	.24	.18	.85	.18	.20	.01	0			
19	0	.03	.24	.18	.61	.18	.17	.01	.01			
20	0	.03	.24	.18	.64	.18	.17	.01	.01			
21	0	.04	.24	.18	.52	.18	.17	.01	.01			
22	0	.04	5.4	.18	.61	.24	.16	.01	.02			
23	0	.04	1.8	.93	.52	.24	.17	.01	.01			
24	0	.05	3.2	.44	.52	.18	.27	.01	0			
25	0	.05	8.4	.81	.52	.18	.30	.01	0			
26	0	.05	3.7	1.1	.48	.18	.25	.01	0			
27	0	.05	7.4	13	.44	.18	.13	.01	0			
28	0	.09	3.2	6.0	.44	.18	.07	0	0			
29	.01	.19	2.0	2.4	.57	.18	.06	0	0			
30	.01	.13	1.5	1.7	------	.18	.03	0	0			
31	.01	------	1.2	1.2	------	.18	------	0	------			------
TOTAL	.03	2.48	42.82	35.60	66.20	8.58	5.95	.45	.09	0	0	0
MEAN	.001	.083	1.38	1.15	2.28	.28	.20	.015	.003	0	0	0
MAX	.01	.41	8.4	13	22	.48	.41	.04	.02	0	0	0
MIN	0	.01	.09	.18	.44	.18	.03	0	0	0	0	0
AC-FT	.06	4.9	85	71	131	17	12	.9	.2	0	0	0

CAL YR 1971 TOTAL 330.95 MEAN .91 MAX 15 MIN 0 AC-FT 656
WTR YR 1972 TOTAL 162.20 MEAN .44 MAX 22 MIN 0 AC-FT 322

PEAK DISCHARGE (BASE, 150 CFS).--No peak above base.

11154200 UVAS CREEK NEAR GILROY, CALIF.

LOCATION.--Lat 36°59'32", long 121°34'21", in Las Animas Grant, Santa Clara County, on left bank 400 ft upstream from county road bridge, 0.4 mile southwest of Gilroy, and 3.9 miles downstream from Bodfish Creek.

DRAINAGE AREA.--71.2 sq mi.

PERIOD OF RECORD.--January 1959 to current year.

GAGE.--Water-stage recorder. Altitude of gage is 190 ft (from topographic map).

AVERAGE DISCHARGE.--13 years, 35.3 cfs (25,570 acre-ft per year).

EXTREMES.--Current year: Maximum discharge, 120 cfs Feb. 5 (gage height, 4.30 ft); no flow for several months. Period of record: Maximum discharge, 9,490 cfs Feb. 1, 1963 (gage height, 17.66 ft), from rating curve extended above 3,300 cfs; no flow for many days in each year.

REMARKS.--Records good except those for period of no gage-height record, which are fair. Flow regulated by Uvas Reservoir 10 miles upstream (see sta 11154020). Diversion above station for irrigation.

DISCHARGE, IN CUBIC FEET PER SECOND, WATER YEAR OCTOBER 1971 TO SEPTEMBER 1972

DAY	OCT	NOV	DEC	JAN	FEB	MAR	APR	MAY	JUN	JUL	AUG	SEP
1	0	.98	0	6.0	7.1							
2	0	.98	0	4.9	5.9							
3	0	.98	0	4.3	4.9							
4	0	.98	0	3.6	4.3							
5	0	.98	0	3.0	36							
6	0	.98	0	2.7	77							
7	0	.98	0	2.3	38							
8	0	1.0	0	2.0	25							
9	0	1.0	0	1.9	18							
10	0	1.0	0	1.7	14							
11	0	1.0	0	1.6	11							
12	0	1.0	0	1.6	9.0							
13	0	1.0	0	1.3	7.8							
14	0	1.0	0	1.2	6.7							
15	0	1.0	0	1.1	5.4							
16	0	.70	0	1.0	4.3							
17	0	0	0	.91	2.8							
18	0	0	0	.81	2.0							
19	0	0	0	.76	.91							
20	0	0	0	.76	.50							
21	0	0	0	.71	.23							
22	0	0	0	1.5	.07							
23	0	0	0	2.5	.01							
24	0	0	0	2.2	0							
25	0	0	3.6	2.3	0							
26	0	0	19	2.4	0							
27	0	0	27	30	0							
28	0	0	22	36	0							
29	0	0	13	17	0							
30	.28	0	9.6	11	------							
31	.98	------	7.6	8.8	------		------		------			------
TOTAL	1.26	15.56	101.8	157.85	280.92	0	0	0	0	0	0	0
MEAN	.041	.52	3.28	5.09	9.69	0	0	0	0	0	0	0
MAX	.98	1.0	27	36	77	0	0	0	0	0	0	0
MIN	0	0	0	.71	0	0	0	0	0	0	0	0
AC-FT	2.5	31	202	313	557	0	0	0	0	0	0	0

CAL YR 1971 TOTAL 2,858.24 MEAN 7.83 MAX 134 MIN 0 AC-FT 5,670
WTR YR 1972 TOTAL 557.39 MEAN 1.52 MAX 77 MIN 0 AC-FT 1,110

NOTE.--No gage-height record Nov. 16 to Dec. 25.

11156500 SAN BENITO RIVER NEAR WILLOW CREEK SCHOOL, CALIF.

LOCATION.--Lat 36°36'34", long 121°12'07", in SE¼SE¼ sec.21, T.15 S., R.7 E., San Benito County, on left bank 1.3 miles downstream from Willow Creek, 0.9 mile northwest of Willow Creek School, and 10 miles northwest of San Benito.

DRAINAGE AREA.--249 sq mi.

PERIOD OF RECORD.--October 1939 to current year. Monthly discharge only for some periods, published in WSP 1315-B.

GAGE.--Water-stage recorder. Datum of gage is 925.52 ft above mean sea level, unadjusted. Prior to Jan. 28, 1948, and Nov. 11, 1955, to Sept. 30, 1965, at site 0.9 mile downstream at different datum. Jan. 28, 1948, to Nov. 10, 1955, and Oct. 1, 1965, to Oct. 22, 1970 at present site at datum 2.37 ft higher.

AVERAGE DISCHARGE.--33 years, 23.4 cfs (16,950 acre-ft per year); median of yearly mean discharges, 13 cfs (9,400 acre-ft per year).

EXTREMES.--Current year: Maximum discharge, 60 cfs Dec. 28, May 1, 2 (gage height, 3.79 ft); minimum daily, 0.05 cfs Aug. 30 to Sept. 1.

Period of record: Maximum discharge, 8,210 cfs Apr. 3, 1958 (gage height, 8.35 ft, site and datum then in use), from rating curve extended above 600 cfs on basis of slope-area measurement of maximum flow; no flow at times.

Flood of February 1938, reached a stage of about 9.0 ft (former datum) from floodmarks.

REMARKS.--Records good. Flow regulated by Hernandez Reservoir 40 miles upstream beginning in December 1961 (capacity, 18,700 acre-ft). Small diversion above station for irrigation.

REVISIONS (WATER YEARS).--WSP 1565: 1948(M), 1949.

DISCHARGE, IN CUBIC FEET PER SECOND, WATER YEAR OCTOBER 1971 TO SEPTEMBER 1972

DAY	OCT	NOV	DEC	JAN	FEB	MAR	APR	MAY	JUN	JUL	AUG	SEP
1	.22	.22	.28	21	3.8	1.6	.36	58	.50	.10	.07	.05
2	.22	.22	.34	18	3.3	1.4	.49	57	.50	.10	.10	.07
3	.22	.22	.28	15	3.3	1.6	.49	36	.50	.10	.10	.07
4	.19	.22	.39	13	2.8	1.6	.36	21	.50	.10	.10	.10
5	.19	.22	.34	11	4.3	1.4	.64	18	.35	.10	.07	.17
6	.22	.22	.28	9.4	4.3	1.2	.79	15	.35	.10	.07	.17
7	.22	.22	.34	8.0	3.3	1.2	.79	12	.50	.10	.10	.10
8	.22	.24	.44	7.4	3.3	1.2	.64	9.5	.50	.10	.07	.17
9	.13	.24	.44	6.3	2.8	1.4	.49	8.0	.50	.17	.07	.17
10	.19	.24	.44	5.7	2.8	1.2	.49	7.2	.50	.17	.07	.17
11	.19	.28	.53	5.2	2.6	.97	.49	6.0	.35	.17	.07	.17
12	.19	.28	.58	4.7	2.6	1.2	.79	4.5	.17	.17	.07	.17
13	.13	.28	.68	4.3	2.6	1.2	.97	2.5	.17	.17	.10	.10
14	.19	.28	.76	3.3	2.6	.97	.79	1.9	.17	.10	.10	.10
15	.19	.24	.68	3.3	2.2	.79	.49	1.1	.10	.10	.10	.10
16	.19	.28	.68	2.8	2.2	.64	.36	.70	.10	.17	.10	.17
17	.19	.28	.68	2.8	2.2	.64	.36	.70	.10	.17	.17	.17
18	.22	.28	.68	2.8	2.0	.49	.36	.70	.10	.17	.10	.17
19	.22	.24	.68	2.8	2.0	.49	.28	.70	.10	.17	.17	.17
20	.22	.24	.76	2.8	1.8	.36	6.9	.90	.10	.17	.17	.17
21	.19	.24	.76	2.8	1.8	.49	41	.70	.07	.17	.17	.10
22	.19	.24	10	2.8	1.8	.49	46	.70	.10	.17	.10	.10
23	.19	.24	8.0	2.8	1.8	.49	50	.70	.10	.17	.10	.10
24	.19	.24	6.0	2.8	1.6	.49	50	.70	.10	.17	.10	.17
25	.22	.24	29	3.3	1.4	.36	52	.70	.10	.10	.07	.17
26	.19	.24	25	4.3	1.4	.36	52	.70	.10	.10	.07	.17
27	.19	.24	38	5.2	1.4	.36	52	.70	.07	.10	.07	.17
28	.19	.28	52	6.9	1.6	.49	53	.70	.07	.07	.07	.17
29	.19	.28	56	5.2	1.6	.49	57	.50	.07	.07	.07	.10
30	.19	.28	39	4.7	------	.36	57	.50	.07	.10	.05	.10
31	.19	------	28	4.3	------	.36	------	.50	------	.10	.05	------
TOTAL	6.07	7.46	302.04	194.7	71.2	26.29	527.33	268.50	7.01	4.02	2.89	4.08
MEAN	.20	.25	9.74	6.28	2.46	.85	17.6	8.66	.23	.13	.093	.14
MAX	.22	.28	56	21	4.3	1.6	57	58	.50	.17	.17	.17
MIN	.13	.22	.28	2.8	1.4	.36	.28	.50	.07	.07	.05	.05
AC-FT	12	15	599	386	141	52	1,050	533	14	8.0	5.7	8.1

CAL YR 1971 TOTAL 3,787.18 MEAN 10.4 MAX 56 MIN 0 AC-FT 7,510
WTR YR 1972 TOTAL 1,421.59 MEAN 3.88 MAX 58 MIN .05 AC-FT 2,820

11157500 TRES PINOS CREEK NEAR TRES PINOS, CALIF.

LOCATION.--Lat 36°45'13", long 121°17'03", in Santa Ana y Quien Sabe Grant, San Benito County, on right bank 3.5 miles southeast of Tres Pinos, and 6.2 miles upstream from mouth.

DRAINAGE AREA.--206 sq mi.

PERIOD OF RECORD.--October 1939 to current year. Yearly estimate only for 1940 and monthly discharge only for some periods, published in WSP 1315-B.

GAGE.--Water-stage recorder. Concrete control since June 3, 1954 (control ineffective since 1955 due to gravel fill). Altitude of gage is 570 ft (from topographic map).

AVERAGE DISCHARGE (unadjusted).--33 years, 13.1 cfs (9,490 acre-ft per year).

EXTREMES.--Current year: Maximum discharge, 178 cfs Dec. 25 (gage height, 4.89 ft); minimum daily, 0.18 cfs Aug. 20.

Period of record: Maximum discharge, 8,060 cfs Apr. 4, 1941 (gage height, 7.75 ft), from rating curve extended above 3,500 cfs; maximum gage height, 9.49 ft Feb. 24, 1969; no flow at times in 1952, 1957-61, 1965.

Flood in February 1938 reached a stage of about 9.0 ft, from floodmarks.

REMARKS.--Records good. No regulation; diversions above station for irrigation can divert total flow in summer months, and since 1962, diversions into basin above station from San Benito River for percolation and irrigation.

REVISIONS.--WSP 1715: Drainage area.

DISCHARGE, IN CUBIC FEET PER SECOND, WATER YEAR OCTOBER 1971 TO SEPTEMBER 1972

DAY	OCT	NOV	DEC	JAN	FEB	MAR	APR	MAY	JUN	JUL	AUG	SEP
1	1.4	1.2	1.2	1.4	.90	2.0	.90	.86	.54	.62	.70	.35
2	1.4	1.2	1.2	1.4	.90	2.0	1.0	.81	.54	.62	.70	.35
3	1.6	1.2	1.2	1.4	1.0	1.6	1.0	.75	.54	.70	.70	.35
4	1.4	1.2	1.2	1.4	1.0	1.4	.90	.75	.54	.54	.70	.40
5	1.4	1.2	1.4	1.2	1.2	1.4	.90	.75	.62	.62	.70	.40
6	1.4	1.2	1.4	1.2	1.0	1.4	.96	.72	.54	.70	.62	.40
7	1.2	1.0	1.4	1.2	1.0	1.2	.97	.71	.54	.70	.62	.40
8	1.2	1.0	.90	1.2	1.2	1.2	1.2	.74	.54	.62	.62	.38
9	1.2	1.0	.80	1.2	1.1	1.2	1.2	.71	.54	.54	.50	.40
10	1.2	1.0	1.4	1.2	1.4	1.0	1.2	.67	.62	.62	.40	.48
11	1.2	1.0	1.4	1.2	1.6	.90	1.4	.67	.54	.62	.40	.47
12	1.2	1.0	1.4	1.2	1.8	.80	1.4	.57	.70	.54	.35	.54
13	1.1	1.0	1.6	1.2	1.8	.90	1.4	.56	.70	.50	.30	.54
14	1.2	.90	1.6	1.2	2.0	.90	1.4	.61	.62	.46	.35	.56
15	1.2	.90	1.4	1.2	2.0	.90	1.4	.62	.54	.54	.30	.62
16	1.4	.90	1.4	1.0	2.2	.90	1.3	.60	.62	.54	.25	.59
17	1.4	1.0	1.4	1.0	2.2	.90	1.2	.62	.70	.54	.22	.62
18	1.0	1.0	1.4	1.0	2.4	.80	1.2	.70	.62	.46	.22	.65
19	1.0	1.0	1.4	1.0	2.4	.80	1.2	.70	.80	.46	.22	.65
20	1.0	1.0	1.4	1.0	2.4	.70	1.2	.70	.70	.54	.18	.67
21	1.2	1.0	1.4	1.0	2.7	.80	1.2	.62	.70	.54	.22	.71
22	1.2	1.0	1.8	1.0	2.4	.80	1.1	.62	.80	.54	.30	.76
23	1.2	1.0	1.6	.90	2.4	.70	1.1	.62	.80	.54	.25	.75
24	1.2	1.0	1.8	.90	2.4	.80	1.1	.62	.70	.46	.35	.73
25	1.2	1.0	36	.90	2.4	.80	1.1	.62	.80	.54	.46	.82
26	1.2	1.0	34	.90	2.2	.80	1.1	.62	.80	.54	.46	.79
27	1.2	1.0	68	1.0	2.2	.90	.89	.62	.80	.54	.46	.94
28	1.0	1.2	39	1.0	2.0	.90	1.0	.54	.70	.70	.54	.92
29	1.0	1.2	10	1.0	2.0	.90	.86	.62	.70	.70	.46	.88
30	1.0	1.2	3.0	.90	------	.90	.86	.54	.70	.70	.40	.81
31	1.2	------	1.8	.90	------	.90	------	.54	------	.70	.35	------
TOTAL	37.7	31.50	224.90	34.20	52.20	32.10	33.64	20.40	19.60	17.98	13.30	17.93
MEAN	1.22	1.05	7.25	1.10	1.80	1.04	1.12	.66	.65	.58	.43	.60
MAX	1.6	1.2	68	1.4	2.7	2.0	1.4	.86	.80	.70	.70	.94
MIN	1.0	.90	.80	.90	.90	.70	.86	.54	.54	.46	.18	.35
AC-FT	75	62	446	68	104	64	67	40	39	36	26	36

CAL YR 1971 TOTAL 1,442.24 MEAN 3.95 MAX 95 MIN .13 AC-FT 2,860
WTR YR 1972 TOTAL 535.45 MEAN 1.46 MAX 68 MIN .18 AC-FT 1,060

PEAK DISCHARGE (BASE, 450 CFS).--No peak above base.

11158500 SAN BENITO RIVER NEAR HOLLISTER, CALIF.

LOCATION.--Lat 36°47'17", long 121°22'11", in SW¼ sec.24, T.13 S., R.5 E., San Benito County, on left bank 1,500 ft downstream from Bird Creek, 0.9 mile downstream from Tres Pinos Creek, 2.7 miles west of Tres Pinos, and 4.8 miles southeast of Hollister.

DRAINAGE AREA.--586 sq mi.

PERIOD OF RECORD.--October 1949 to current year.

GAGE.--Water-stage recorder. Altitude of gage is 370 ft (from topographic map).

AVERAGE DISCHARGE.--23 years, 26.7 cfs (19,340 acre-ft per year); median of yearly mean discharges, 9.2 cfs (6,700 acre-ft per year).

EXTREMES.--Current year: Maximum discharge, 325 cfs Dec. 28 (gage height, 5.56 ft, from peak stage indicator); no flow for several months.
Period of record: Maximum discharge, 11,600 cfs Apr. 3, 1958 (gage height, 16.30 ft), from rating curve extended above 1,200 cfs on basis of flood-routing study; no flow at times.

REMARKS.--Records good except those for periods of no gage-height record, which are poor. Flow regulated by Hernandez Reservoir 65 miles upstream beginning in December 1961 (capacity, 18,700 acre-ft). Several small diversions above station for irrigation.

DISCHARGE, IN CUBIC FEET PER SECOND, WATER YEAR OCTOBER 1971 TO SEPTEMBER 1972

DAY	OCT	NOV	DEC	JAN	FEB	MAR	APR	MAY	JUN	JUL	AUG	SEP
1			0	10	.39	.08	.04	12				
2			.01	6.0	.32	.08	.04	13				
3			.01	4.0	.32	.08	.04	15				
4			.01	3.0	.35	.08	.04	11				
5			.01	2.0	.44	.08	.04	1.3				
6			.01	2.0	.54	.08	.04	.13				
7			.01	2.0	.54	.04	.02	.04				
8			.01	2.0	.54	.04	.02	.04				
9			.01	2.0	.53	.04	.02	.04				
10			.01	2.5	.45	.04	.02	.01				
11			.01	3.0	.38	.04	.04	.01				
12			0	5.0	.25	.08	.04	.01				
13			0	3.8	.25	.04	.04	0				
14			0	3.3	.25	.04	.02	0				
15			0	4.2	.25	.04	.02	0				
16			0	3.6	.25	.04	.02	0				
17			0	2.6	.25	.04	.02	0				
18			0	1.8	.25	.04	.02	0				
19			0	1.3	.25	.04	.01	0				
20			0	1.0	.25	.04	.01	0				
21			.01	.78	.25	.04	.01	0				
22			.03	.52	.25	.04	.01	0				
23			.40	.40	.25	.04	.01	0				
24			2.0	.29	.19	.04	.01	0				
25			10	.34	.13	.04	.01	0				
26			20	.41	.13	.04	.01	0				
27			30	.49	.08	.04	3.1	0				
28			100	.59	.08	.04	5.2	0				
29			54	.65	.08	.04	7.0	0				
30			30	.52	------	.04	8.9	0				
31		------	20	.47	------	.04	------	0	------			------
TOTAL	0	0	266.54	70.56	8.49	1.52	24.82	52.58	0	0	0	0
MEAN	0	0	8.60	2.28	.29	.049	.83	1.70	0	0	0	0
MAX	0	0	100	10	.54	.08	8.9	15	0	0	0	0
MIN	0	0	0	.29	.08	.04	.01	0	0	0	0	0
AC-FT	0	0	529	140	17	3.0	49	104	0	0	0	0

CAL YR 1971 TOTAL 2,797.86 MEAN 7.67 MAX 144 MIN 0 AC-FT 5,550
WTR YR 1972 TOTAL 424.51 MEAN 1.16 MAX 100 MIN 0 AC-FT 842

NOTE.--No gage-height record Oct. 29 to Dec. 13, Dec. 21 to Jan. 13.

11158600 SAN BENITO RIVER AT STATE HIGHWAY 156, NEAR HOLLISTER, CALIF.

LOCATION.--Lat 36°51'07", long 121°25'44", in San Justo Grant, San Benito County, on right bank at downstream side of bridge on State Highway 156, and 1.6 miles west of Hollister.

DRAINAGE AREA.--607 sq mi.

PERIOD OF RECORD.--October 1970 to current year.

GAGE.--Water-stage recorder. Altitude of gage is 260 ft (from topographic map).

EXTREMES.--Current year: Maximum discharge, 300 cfs Dec. 28 (gage height, unknown); no flow for several months.
Period of record: Maximum discharge, 514 cfs Dec. 22, 1970 (gage height, 4.23 ft); no flow for many days in each year.

REMARKS.--Records poor. Flow regulated by Hernandez Reservoir 75 miles upstream (capacity, 18,700 acre-ft). Some small diversions above station for irrigation.

DISCHARGE, IN CUBIC FEET PER SECOND, WATER YEAR OCTOBER 1971 TO SEPTEMBER 1972

DAY	OCT	NOV	DEC	JAN	FEB	MAR	APR	MAY	JUN	JUL	AUG	SEP
1	1.8	0	.36	2.0	.36	.20	.06	4.0				
2	1.3	0	.62	.21	.21	.18	.07	5.0				
3	.36	0	.55	.07	.27	.21	.11	6.0				
4	.05	0	.21	.09	.27	.48	.18	5.0				
5	.10	0	.05	.48	.48	.74	.26	1.0				
6	.68	0	.03	.48	.42	.74	.58	.50				
7	.62	0	.18	.55	.48	.88	.18	.20				
8	.68	0	.12	.21	.48	.88	.05	.20				
9	.24	0	.12	.31	.25	1.0	.02	.10				
10	.02	0	.09	.31	.14	1.2	0	.10				
11	0	0	.03	1.2	.08	1.2	.27	0				
12	0	0	.02	1.3	.07	.62	.18	0				
13	0	0	0	1.1	.09	.18	.36	0				
14	0	0	.01	1.0	.07	.81	.16	0				
15	0	0	.40	1.0	.04	1.2	.21	0				
16	0	0	.27	.27	.04	.68	.14	0				
17	0	.17	.27	.27	.04	.02	.02	0				
18	0	.68	.10	.68	.05	.01	0	0				
19	0	.42	.03	.81	.03	.27	.08	0				
20	0	.62	.05	.42	.02	.27	.12	0				
21	0	.21	.18	.55	.03	.14	.07	0				
22	0	.05	.06	.36	.02	.01	.04	0				
23	0	.08	.05	.48	.03	0	0	0				
24	0	.55	.03	.42	.08	.21	.07	0				
25	0	.24	.02	.55	.18	.09	.12	0				
26	0	.04	.02	.42	.18	.16	.04	0				
27	0	.01	.14	.81	.10	.24	1.0	0				
28	0	0	86	.74	.12	.55	1.5	0				
29	0	0	55	.48	.24	.27	2.0	0				
30	0	.02	11	.27	------	.09	3.0	0				
31	0	------	5.2	.27	------	.10	------	0	------			------
TOTAL	5.85	3.09	161.23	18.11	4.87	13.63	10.89	22.10	0	0	0	0
MEAN	.19	.10	5.20	.58	.17	.44	.36	.71	0	0	0	0
MAX	1.8	.68	86	2.0	.48	1.2	3.0	6.0	0	0	0	0
MIN	0	0	0	.07	.02	0	0	0	0	0	0	0
AC-FT	12	6.1	320	36	9.7	27	22	44	0	0	0	0

CAL YR 1971 TOTAL 1,779.01 MEAN 4.87 MAX 178 MIN 0 AC-FT 3,530
WTR YR 1972 TOTAL 239.77 MEAN .66 MAX 86 MIN 0 AC-FT 476

NOTE.--No gage-height record Dec. 28.

11158900 PESCADERO CREEK NEAR CHITTENDEN, CALIF.

LOCATION.--Lat 36°54'28", long 121°35'04", on west boundary of Juristac Grant, Santa Clara County, on left bank 0.2 mile downstream from small left-bank tributary, 0.6 mile upstream from mouth, and 1.2 miles northwest of Chittenden.

DRAINAGE AREA.--10.2 sq mi.

PERIOD OF RECORD.--October 1970 to current year.

GAGE.--Water-stage recorder and rain gage. Datum of gage is 124.13 ft above mean sea level.

EXTREMES.--Current year: Maximum discharge, 73 cfs Feb. 5 (gage height, 4.39 ft), from rating curve extended above 19 cfs; no flow for several months.
Period of record: Maximum discharge, 73 cfs Feb. 5, 1972 (gage height, 4.39 ft), from rating curve extended above 19 cfs; no flow at times.

REMARKS.--Records good. No regulation or diversion above station.

DISCHARGE, IN CUBIC FEET PER SECOND, WATER YEAR OCTOBER 1971 TO SEPTEMBER 1972

DAY	OCT	NOV	DEC	JAN	FEB	MAR	APR	MAY	JUN	JUL	AUG	SEP
1		0	.12	.87	.47	.98	.54	.20	.02			
2		0	.38	.87	.31	.98	.54	.16	.02			
3		0	.47	.76	.31	.87	.47	.16	.02			
4		0	.25	.65	.31	.87	.47	.20	.01			
5		0	.16	.65	17	.87	.54	.25	.01			
6		0	.16	.65	17	.98	.54	.20	.01			
7		0	.12	.65	6.2	.87	.47	.20	.01			
8		0	.12	.65	3.4	.87	.38	.20	.01			
9		0	.16	.65	2.6	.87	.38	.16	.02			
10		0	.20	.54	2.0	.87	.38	.16	.03			
11		0	.20	.54	1.6	.76	.47	.12	.01			
12		.09	.31	.54	1.4	.87	.47	.09	0			
13		.16	.38	.54	1.2	.87	.47	.09	0			
14		.16	.31	.54	1.1	.87	.38	.09	0			
15		.09	.31	.54	.98	.76	.31	.06	0			
16		.04	.31	.54	.98	.76	.31	.09	0			
17		.06	.31	.54	.98	.76	.31	.10	0			
18		.06	.38	.54	.98	.76	.25	.10	0			
19		.06	.38	.47	.98	.54	.25	.11	0			
20		.09	.38	.47	.98	.65	.25	.11	0			
21		.09	.47	.47	.98	.65	.25	.08	0			
22		.09	2.8	.47	.98	.65	.31	.08	0			
23		.09	1.8	1.8	.98	.54	.31	.09	0			
24		.12	1.2	.54	.98	.65	.47	.10	0			
25		.12	7.4	1.6	.98	.65	.31	.10	0			
26		.12	2.6	1.6	.87	.65	.25	.10	0			
27		.12	4.3	10	.87	.54	.25	.08	0			
28		.16	2.0	5.2	.87	.54	.25	.06	0			
29		.16	1.4	2.2	1.1	.65	.25	.04	0			
30		.16	1.1	1.6	------	.65	.20	.02	0			
31		------	.98	.54	------	.54	------	.02	------			------
TOTAL	0	2.04	31.46	38.22	69.39	23.34	11.03	3.62	.17	0	0	0
MEAN	0	.068	1.01	1.23	2.39	.75	.37	.12	.006	0	0	0
MAX	0	.16	7.4	10	17	.98	.54	.25	.03	0	0	0
MIN	0	0	.12	.47	.31	.54	.20	.02	0	0	0	0
AC-FT	0	4.1	62	76	138	46	22	7.2	.3	0	0	0
(a)	0	1.36	4.29	1.00	1.29	.04	.99	0	0	0	0	0

CAL YR 1971 TOTAL 379.78 MEAN 1.04 MAX 25 MIN 0 AC-FT 753
WTR YR 1972 TOTAL 179.27 MEAN .49 MAX 17 MIN 0 AC-FT 356

PEAK DISCHARGE (BASE, 25 CFS).--Jan. 27 (1145) 53 cfs (4.18 ft); Feb. 5 (1415) 73 cfs (4.39 ft).

a Precipitation, in inches.

11159000 PAJARO RIVER AT CHITTENDEN, CALIF.

LOCATION.--Lat 36°54'01", long 121°35'48", in Salsipuedes Grant, Santa Cruz County, on downstream side of right bank pier of bridge on State Highway 129, 0.6 mile downstream from Pescadero Creek, 0.6 mile southeast of Chittenden, and 2.3 miles downstream from San Benito River.

DRAINAGE AREA.--1,186 sq mi.

PERIOD OF RECORD.--October 1939 to current year. Monthly discharge only for some periods, published in WSP 1315-B. Prior to October 1954, published as "near Chittenden."

GAGE.--Water-stage recorder. Datum of gage is 82.28 ft above mean sea level. Prior to May 13, 1949, nonrecording gage on former bridge 100 ft downstream at same datum except that water-stage recorder, also 100 ft downstream and at same datum, was used Dec. 20, 1946, to June 11, 1947, June 21 to Sept. 23, 1947, and Dec. 19, 1947, to May 6, 1948.

AVERAGE DISCHARGE.--33 years, 144 cfs (104,300 acre-ft per year); median of yearly mean discharges, 74 cfs (53,600 acre-ft per year).

EXTREMES.--Current year: Maximum discharge, 128 cfs Mar. 18 (gage height, 4.23 ft), result of temporary dam failure; minimum daily, 0.46 cfs Aug. 7.

Period of record: Maximum discharge, 24,000 cfs Dec. 24, 1955 (gage height, 32.46 ft), from rating curve extended above 8,300 cfs on basis of slope-conveyance study; maximum gage height, 33.11 ft Apr. 3, 1958; no flow at times in July, August 1948.

Flood in February 1938, reached a stage of 31.3 ft, from floodmarks.

REMARKS.--Records good. Flow regulated by Hernandez Reservoir (capacity, 18,700 acre-ft), Pacheco Lake (capacity, 6,150 acre-ft), Chesbro Reservoir (see sta 11153480), Uvas Reservoir (see sta 11154020), and San Felipe Lake. Many diversions above station for irrigation. Records of chemical analyses for the current year are published in Part 2 of this report.

DISCHARGE, IN CUBIC FEET PER SECOND, WATER YEAR OCTOBER 1971 TO SEPTEMBER 1972

DAY	OCT	NOV	DEC	JAN	FEB	MAR	APR	MAY	JUN	JUL	AUG	SEP
1	4.4	3.8	4.3	14	22	17	12	7.7	5.4	10	1.4	3.4
2	4.4	4.9	4.7	13	20	16	11	4.9	5.1	10	2.0	2.5
3	4.4	5.4	4.9	12	18	16	10	7.4	5.6	11	1.3	2.1
4	4.3	4.7	5.8	12	18	17	10	7.0	5.4	10	1.0	1.8
5	4.3	4.3	6.0	12	35	17	11	7.7	6.0	9.0	.87	2.5
6	4.2	4.0	6.3	12	72	17	12	6.5	4.0	6.7	.80	3.7
7	4.4	3.9	5.8	13	61	17	10	6.3	3.2	5.4	.46	3.2
8	4.6	3.9	5.8	13	43	18	6.5	5.4	5.8	5.4	.68	2.3
9	4.7	3.9	6.0	13	36	18	7.7	5.8	7.0	3.4	.72	2.0
10	5.1	3.9	6.5	13	32	18	7.7	6.3	7.2	2.7	1.7	1.3
11	5.2	4.4	7.0	13	27	17	9.0	6.0	6.3	3.0	4.0	1.2
12	5.4	5.0	7.4	12	24	17	10	5.1	5.1	2.7	6.0	1.4
13	4.9	4.7	7.7	12	22	18	12	4.6	5.8	2.0	4.6	1.4
14	4.5	4.4	7.9	12	21	16	7.9	5.6	7.9	1.7	4.4	1.8
15	4.4	4.4	7.9	13	20	6.6	6.7	7.0	8.6	1.8	3.2	2.1
16	4.0	4.2	8.1	13	18	5.4	7.0	6.3	11	1.6	1.7	2.5
17	3.8	4.2	7.9	13	17	4.7	7.7	6.3	9.8	1.7	1.3	1.8
18	3.7	4.2	8.1	13	17	46	8.4	5.4	10	1.7	1.4	2.3
19	3.7	4.3	8.1	13	17	14	7.9	4.9	9.8	1.7	1.2	3.2
20	3.9	4.4	8.1	13	17	14	7.2	5.6	7.9	2.5	.68	3.4
21	3.9	4.4	8.8	13	17	14	6.7	6.7	7.7	2.5	.68	3.2
22	3.7	4.4	12	13	17	14	6.0	6.5	9.0	4.0	1.8	3.0
23	3.8	4.6	13	14	17	16	6.3	7.0	9.0	4.9	4.9	2.7
24	4.2	4.7	13	14	17	16	7.2	7.2	7.7	4.6	2.5	2.1
25	4.6	4.7	18	14	17	15	7.2	7.2	8.6	4.4	2.3	2.3
26	4.3	4.9	22	14	17	16	7.4	7.7	11	4.4	3.0	3.0
27	4.0	4.7	18	26	17	15	7.7	6.0	11	3.4	3.0	3.4
28	3.7	4.6	20	34	18	15	11	6.0	9.8	2.7	3.2	3.2
29	3.7	4.4	20	36	17	15	8.4	6.3	11	2.0	3.2	2.7
30	3.7	4.3	17	28	------	15	7.4	6.0	11	1.3	3.4	3.0
31	3.5	------	15	24	------	13	------	5.8	------	1.6	4.0	------
TOTAL	131.4	132.6	311.1	484	711	493.7	257.0	194.2	232.7	129.8	71.39	74.5
MEAN	4.24	4.42	10.0	15.6	24.5	15.9	8.57	6.26	7.76	4.19	2.30	2.48
MAX	5.4	5.4	22	36	72	46	12	7.7	11	11	6.0	3.7
MIN	3.5	3.8	4.3	12	17	4.7	6.0	4.6	3.2	1.3	.46	1.2
AC-FT	261	263	617	960	1,410	979	510	385	462	257	142	148

CAL YR 1971 TOTAL 10,402.60 MEAN 28.5 MAX 570 MIN 3.2 AC-FT 20,630
WTR YR 1972 TOTAL 3,223.39 MEAN 8.81 MAX 72 MIN .46 AC-FT 6,390

11159150 CORRALITOS CREEK NEAR CORRALITOS, CALIF.

LOCATION.--Lat 37°00'20", long 121°48'25", in Los Corralitos Grant, Santa Cruz County, on left bank 0.5 mile downstream from Mormon Gulch, 1.2 miles upstream from Corralitos, and 7 miles northwest of Watsonville.

DRAINAGE AREA.--10.6 sq mi.

PERIOD OF RECORD.--October 1957 to September 1972 (discontinued).

GAGE.--Water-stage recorder. Concrete control since July 24, 1969. Altitude of gage is 310 ft (from topographic map).

AVERAGE DISCHARGE.--15 years, 8.58 cfs (6,220 acre-ft per year); median of yearly mean discharges, 5.7 cfs (4,100 acre-ft per year).

EXTREMES.--Current year: Maximum discharge, 60 cfs Feb. 5 (gage height, unknown); no flow for many days.
Period of record: Maximum discharge, 1,970 cfs Apr. 2, 1958 (gage height, 7.55 ft), from rating curve extended above 450 cfs on basis of estimate of maximum flow over dam; maximum gage height, 7.62 ft Jan. 31, 1963; no flow at times.

REMARKS.--Records fair except those for period of no gage-height record, which are poor. No regulation; Watsonville Water Works can divert up to 8.0 cfs daily above station for municipal supply, domestic use, and irrigation.

DISCHARGE, IN CUBIC FEET PER SECOND, WATER YEAR OCTOBER 1971 TO SEPTEMBER 1972

DAY	OCT	NOV	DEC	JAN	FEB	MAR	APR	MAY	JUN	JUL	AUG	SEP
1	.04	.05	.16	.60	3.4	.25	.11	.03	.02	.07	.03	0
2	.04	.07	.37	.52	3.1	.16	.11	.03	.01	.03	.01	0
3	.05	.10	.45	.45	2.9	.11	.11	.01	.03	.03	.03	0
4	.05	.12	.45	.39	2.6	.20	.11	.03	.03	.03	.03	0
5	.05	.16	.16	.37	5.0	.16	1.4	.03	.07	.03	.01	0
6	.05	.20	.20	.34	23	.11	1.8	.07	.07	.01	.03	0
7	.05	.20	.31	.33	17	.16	.03	.03	.07	.03	.03	.01
8	.05	.20	.16	.32	12	.37	.16	.03	.07	.03	.03	.03
9	.05	.25	.16	.31	8.0	.25	.16	.07	.07	.01	.01	.03
10	.05	.25	.16	.31	6.0	.20	.16	.07	.11	0	.03	.03
11	.06	.25	.11	.26	2.6	.20	2.6	.03	.07	0	.01	.03
12	.06	.31	.16	.21	2.2	.20	4.9	.03	.07	0	.01	.03
13	.06	.31	.16	.16	1.7	.16	4.0	.03	.07	0	.01	.03
14	.06	.31	.16	.12	1.6	.20	.54	.01	.07	.01	.01	.03
15	.06	.25	.20	.11	1.3	.20	.11	.01	.07	.03	.01	.07
16	.06	.20	.11	.06	1.3	.20	.03	.01	.11	.03	.01	.07
17	.09	.11	.16	.06	1.2	.01	.16	.01	.11	.16	0	.07
18	.11	.16	.16	.06	.88	.16	.20	.04	.11	.16	0	.07
19	.06	.16	.11	.07	.75	.20	.16	.02	.11	.11	0	.07
20	.06	.11	.60	.05	.64	.16	.16	.03	.11	.16	0	.03
21	.06	.11	5.3	.04	.54	.20	.11	.05	.07	.16	0	.03
22	.05	.16	.29	.04	.88	.07	.11	.06	.11	.16	0	.03
23	.03	.16	2.0	.10	.75	.16	.07	.04	.11	.20	0	.03
24	.01	.07	18	.08	.64	.11	1.9	.02	.11	.16	0	.03
25	.01	.11	7.3	.05	.45	.07	.01	.03	.07	.16	0	.03
26	.01	.16	16	.30	.37	.07	.03	.03	.03	.11	0	.07
27	.02	.16	10	2.0	.31	.07	.03	.03	.03	.11	0	.16
28	.02	.20	5.0	10	.75	.11	.11	.03	.03	.11	0	.07
29	.03	.37	3.5	6.0	1.7	.07	.07	.03	.07	.16	0	.03
30	.04	.25	2.0	4.5	------	.11	.03	.03	.07	.11	0	.07
31	.05	------	1.0	3.7	------	.16	------	.04	------	.03	0	------
TOTAL	1.49	5.52	74.90	31.91	103.56	4.86	19.48	1.01	2.15	2.40	.30	1.15
MEAN	.048	.18	2.42	1.03	3.57	.16	.65	.033	.072	.077	.010	.038
MAX	.11	.37	18	10	23	.37	4.9	.07	.11	.20	.03	.16
MIN	.01	.05	.11	.04	.31	.01	.01	.01	.01	0	0	0
AC-FT	3.0	11	149	63	205	9.6	39	2.0	4.3	4.8	.6	2.3

CAL YR 1971 TOTAL 1,060.43 MEAN 2.91 MAX 44 MIN 0 AC-FT 2,100
WTR YR 1972 TOTAL 248.73 MEAN .68 MAX 23 MIN 0 AC-FT 493

PEAK DISCHARGE (BASE, 300 CFS).--No peak above base.

NOTE.--No gage-height record Dec. 20 to Feb. 2, Feb. 5-10.

11159200 CORRALITOS CREEK AT FREEDOM, CALIF.

LOCATION.--Lat 36°56'22", long 121°46'10", in Los Corralitos Grant, Santa Cruz County, on right bank just upstream from Green Valley Road bridge, 0.2 mile north of Freedom, and 2.3 miles north of Watsonville.

DRAINAGE AREA.--27.8 sq mi.

PERIOD OF RECORD.--October 1956 to current year.

GAGE.--Water-stage recorder. Altitude of gage is 80 ft (from topographic map).

AVERAGE DISCHARGE.--16 years, 13.3 cfs (9,640 acre-ft per year); median of yearly mean discharges, 9.0 cfs (6,500 acre-ft per year).

EXTREMES.--Current year: Maximum discharge, 155 cfs Feb. 5 (gage height, 3.81 ft); no flow for many days. Period of record: Maximum discharge, 2,680 cfs Apr. 2, 1958 (gage height, 12.59 ft); no flow at times. Flood of Dec. 22, 1955, reached a stage of 15.6 ft, from floodmarks (discharge, 3,620 cfs on basis of contracted-opening measurement of maximum flow).

REMARKS.--Records fair except those for period of no gage-height record, which are poor. No regulation; Watsonville Water Works can divert up to 8.0 cfs daily above station for municipal supply, domestic use, and irrigation.

DISCHARGE, IN CUBIC FEET PER SECOND, WATER YEAR OCTOBER 1971 TO SEPTEMBER 1972

DAY	OCT	NOV	DEC	JAN	FEB	MAR	APR	MAY	JUN	JUL	AUG	SEP
1	.01	0	.06	1.4	3.3	.18	.04	0				
2	0	0	.19	.86	2.7	.16	.02	0				
3	0	0	.60	.70	1.9	.14	.02	0				
4	0	0	1.5	.24	2.5	.14	.02	0				
5	0	0	.12	.16	76	.14	.14	.02				
6	0	.02	.14	.12	43	.14	.08	0				
7	0	.03	.84	.10	22	.14	.04	0				
8	0	.05	.20	.10	12	.14	.02	0				
9	0	.09	.02	.10	8.0	.08	.02	0				
10	0	.15	.08	.10	5.0	.14	.01	0				
11	0	.26	.06	.10	3.6	.24	.08	0				
12	.01	.43	.40	.12	2.3	.24	.64	0				
13	.01	.76	.70	.12	1.6	.14	3.6	0				
14	.02	.58	.18	.12	1.2	.05	.21	0				
15	.02	.20	.06	.12	1.0	.05	.04	0				
16	.02	.72	.06	.12	.94	.04	.01	0				
17	.04	.29	.08	.16	.86	.04	.01	0				
18	.02	.11	.08	.16	.64	.05	.01	0				
19	.02	.45	.08	.18	.40	.05	0	0				
20	.02	.09	.08	.08	.32	.04	0	0				
21	.02	.03	.52	.10	.28	.02	0	0				
22	.02	.12	17	.10	.28	.02	0	0				
23	.01	.45	9.4	.24	.32	.02	.01	0				
24	.01	.05	34	.12	.28	.02	.14	0				
25	0	.04	54	2.0	.40	.02	.01	0				
26	0	.10	23	3.6	.44	.02	.01	0				
27	0	.22	52	21	.24	.02	0	0				
28	0	.50	18	13	.18	.02	0	0				
29	0	1.0	10	8.1	.78	.02	0	0				
30	0	.26	5.6	5.0	------	.02	0	0				
31	0	------	2.1	3.9	------	.02	------	0	------			------
TOTAL	.25	7.00	231.15	62.32	192.46	2.56	5.18	.02	0	0	0	0
MEAN	.008	.23	7.46	2.01	6.64	.083	.17	.0006	0	0	0	0
MAX	.04	1.0	54	21	76	.24	3.6	.02	0	0	0	0
MIN	0	0	.02	.08	.18	.02	0	0	0	0	0	0
AC-FT	.5	14	458	124	382	5.1	10	.04	0	0	0	0

CAL YR 1971 TOTAL 1,478.63 MEAN 4.05 MAX 70 MIN 0 AC-FT 2,930
WTR YR 1972 TOTAL 500.94 MEAN 1.37 MAX 76 MIN 0 AC-FT 994

PEAK DISCHARGE (BASE, 600 CFS).--No peak above base.

NOTE.--No gage-height record Nov. 6 to Dec. 10.

11159500 PAJARO RIVER AT WATSONVILLE, CALIF.

LOCATION.--Lat 36°54'19", long 121°45'01", in Bolsa del Pajaro Grant, Santa Cruz County, on right bank at downstream side of bridge on State Highway 1 in Watsonville, and 5 miles upstream from mouth.

DRAINAGE AREA.--1,273 sq mi (revised).

PERIOD OF RECORD.--October 1911 to September 1913, October 1971 to current year.

GAGE.--Water-stage recorder. Datum of gage is 8.55 ft above mean sea level. Oct. 11, 1911, to Sept. 30, 1913, nonrecording gage at same site at different datum.

EXTREMES.--Current year: Maximum discharge, 80 cfs Feb. 5 (gage height, 5.36 ft), from rating curve extended above 17 cfs; minimum daily, 0.05 cfs July 13, 14.
Period of record: Maximum discharge observed, 765 cfs Apr. 11, 1912 (gage height, 4.44 ft, datum then in use); no flow at times in 1912-13.

REMARKS.--Records fair. Flow regulated by Hernandez Reservoir (capacity, 18,700 acre-ft), Pacheco Lake (capacity, 6,150 acre-ft), Chesbro Reservoir (see sta 11153480), Uvas Reservoir (see sta 11154020), and San Felipe Lake. Many diversions above station for irrigation.

DISCHARGE, IN CUBIC FEET PER SECOND, WATER YEAR OCTOBER 1971 TO SEPTEMBER 1972

DAY	OCT	NOV	DEC	JAN	FEB	MAR	APR	MAY	JUN	JUL	AUG	SEP
1	1.1	.97	1.2	5.2	17	10	5.1	2.6	.83	.47	.43	3.6
2	1.1	1.1	6.2	2.9	16	10	4.5	2.5	.54	.40	.64	3.4
3	1.1	1.2	4.0	2.9	15	10	3.7	2.4	.35	.47	.85	3.4
4	1.1	1.3	1.8	2.3	15	10	3.5	1.9	.97	.33	.72	3.4
5	1.1	1.0	1.3	1.6	45	9.7	5.5	2.1	.37	.34	.63	3.2
6	1.1	.81	1.3	2.3	46	9.5	3.3	2.0	.32	.28	.60	3.2
7	1.1	.96	1.2	2.0	52	8.6	3.1	1.9	.31	.48	.58	3.5
8	1.2	.83	.70	1.8	38	8.7	2.9	1.8	.55	.88	.60	3.4
9	1.2	.98	.75	2.5	30	8.5	2.9	1.1	.53	.39	.72	3.6
10	1.2	.78	1.1	2.8	26	8.4	2.4	1.1	.58	.14	1.1	4.6
11	1.3	4.9	.97	2.5	23	8.4	4.5	.68	.58	.08	2.0	5.2
12	1.3	4.9	3.5	2.3	20	8.0	2.8	.40	.89	.07	5.5	3.7
13	1.2	5.6	1.3	2.9	18	7.4	2.3	2.5	.54	.05	5.4	3.5
14	1.2	2.8	1.2	4.0	17	6.5	2.1	.53	.33	.05	5.3	3.6
15	1.1	2.0	1.0	2.8	15	6.1	3.0	.47	.27	.16	5.2	3.7
16	1.0	1.8	.83	3.5	15	9.1	1.5	.42	.28	.16	4.2	3.7
17	.94	1.6	.82	4.6	15	20	1.4	1.5	.41	.31	4.4	3.5
18	.93	1.5	1.0	4.6	14	20	1.4	1.1	1.5	.28	4.3	3.5
19	.94	1.5	1.1	4.8	14	32	1.1	.96	.80	.39	3.8	3.4
20	.95	1.4	.88	4.8	13	25	1.1	1.3	.53	.53	3.7	3.3
21	.95	1.4	4.6	4.9	13	21	1.8	.82	.38	.43	3.5	3.2
22	.95	1.3	15	4.8	13	19	1.2	1.5	.25	.48	3.6	3.0
23	.97	1.3	12	7.5	12	19	.68	.96	.33	.53	3.5	3.0
24	1.0	1.3	20	5.6	12	18	2.1	.95	.25	.64	3.5	2.9
25	1.1	1.3	38	7.5	11	19	.92	.68	.43	.58	3.6	2.9
26	1.0	1.2	21	11	11	19	.82	.67	.56	.31	3.6	3.7
27	.97	1.0	33	28	11	16	.70	.45	.71	.21	3.4	3.6
28	.93	2.5	18	24	11	9.5	.62	.54	.49	.48	4.8	3.5
29	.91	1.3	13	24	10	7.2	.63	.65	.61	.64	3.7	3.4
30	.89	1.0	11	24	------	4.9	2.1	.78	.48	.35	3.6	3.4
31	.88	------	6.5	19	------	4.7	------	3.3	------	.48	3.7	------
TOTAL	32.71	51.53	224.25	223.4	568	393.2	69.67	40.56	15.97	11.39	91.17	105.0
MEAN	1.06	1.72	7.23	7.21	19.6	12.7	2.32	1.31	.53	.37	2.94	3.50
MAX	1.3	5.6	38	28	52	32	5.5	3.3	1.5	.88	5.5	5.2
MIN	.88	.78	.70	1.6	10	4.7	.62	.40	.25	.05	.43	2.9
AC-FT	65	102	445	443	1,130	780	138	80	32	23	181	208

WTR YR 1972 TOTAL 1,826.85 MEAN 4.99 MAX 52 MIN .05 AC-FT 3,620

11159690 APTOS CREEK NEAR APTOS, CALIF.

LOCATION.--Lat 37°00'06", long 121°54'18", in Aptos Grant, Santa Cruz County, on right bank at downstream side of county road bridge, 0.4 mile downstream from small right-bank tributary, and 1.7 miles north of Aptos.

DRAINAGE AREA.--10.2 sq mi.

PERIOD OF RECORD.--October 1971 to September 1972.

GAGE.--Water-stage recorder. Altitude of gage is 160 ft (from topographic map).

EXTREMES.--Current year: Maximum discharge, 30 cfs Feb. 5 (gage height, 1.53 ft); minimum daily, 0.36 cfs July 30 to Aug. 2.

REMARKS.--Records good. No regulation or diversion above station.

DISCHARGE, IN CUBIC FEET PER SECOND, WATER YEAR OCTOBER 1971 TO SEPTEMBER 1972

DAY	OCT	NOV	DEC	JAN	FEB	MAR	APR	MAY	JUN	JUL	AUG	SEP
1	1.0	.88	1.5	2.8	3.6	2.3	1.5	1.5	.74	.75	.36	.52
2	1.0	.88	3.0	2.7	3.6	2.1	1.5	1.5	.74	.74	.36	.52
3	1.0	.88	2.3	2.5	3.4	2.1	1.5	1.1	.74	.74	.44	.52
4	1.0	.88	2.1	2.5	3.2	2.1	1.5	1.1	.74	.74	.58	.52
5	1.0	.88	1.5	2.3	16	2.1	2.3	1.1	.74	.74	.62	.52
6	1.0	1.1	1.5	2.3	13	2.1	2.5	1.3	.74	.74	.62	.52
7	1.0	1.1	1.1	2.3	7.9	2.1	1.9	1.3	.74	.74	.62	.52
8	1.0	1.1	1.1	2.3	6.2	2.1	1.3	1.3	.74	.74	.62	.52
9	1.0	1.3	1.1	2.3	5.3	2.1	1.5	1.3	.74	.74	.62	.52
10	1.0	1.1	1.1	2.3	4.7	2.1	1.5	1.3	.74	.64	.62	.52
11	1.0	1.5	1.1	2.1	4.2	2.1	2.5	1.3	.74	.62	.62	.52
12	1.1	4.7	2.5	2.1	3.8	2.1	2.7	1.1	.88	.62	.53	.52
13	1.1	5.3	1.9	2.1	3.6	1.9	3.2	1.1	.88	.52	.62	.52
14	1.1	3.0	1.5	2.1	3.4	1.9	2.3	.88	.76	.52	.52	.52
15	1.1	2.1	1.3	2.1	3.2	1.9	2.1	.88	.74	.52	.52	.52
16	.88	1.5	1.1	2.1	3.0	1.9	1.9	.88	.74	.55	.52	.52
17	1.1	1.1	1.1	2.1	3.0	1.7	1.7	.88	.74	.62	.52	.52
18	1.3	1.1	1.1	2.1	2.8	1.7	1.3	.88	.74	.62	.52	.52
19	1.1	1.1	.88	2.1	2.8	1.7	1.5	.88	.74	.66	.52	.52
20	1.1	1.1	.88	2.1	2.7	1.7	1.3	.88	.74	1.1	.52	.52
21	1.1	.88	1.5	2.1	2.7	1.7	1.3	.88	.74	.76	.52	.52
22	.88	.88	6.7	2.1	2.8	1.7	1.3	.88	.74	.42	.52	.52
23	.88	.74	3.8	2.5	2.7	1.7	1.3	.88	.74	1.1	.52	.52
24	.88	.74	8.4	2.1	2.7	1.7	2.8	.88	.74	1.1	.52	.52
25	.74	.74	14	3.6	2.5	1.7	2.1	.88	.74	.77	.52	.52
26	.74	.88	8.1	3.0	2.5	1.5	1.9	.88	.74	.52	.55	.88
27	.62	1.1	16	8.1	2.3	1.5	1.7	.88	.74	.52	.62	6.4
28	.62	2.1	7.1	6.2	2.3	1.5	1.5	.88	.88	.44	.62	2.7
29	.52	2.1	4.4	4.9	2.3	1.5	1.5	.88	.88	.37	.60	.74
30	.62	1.5	3.6	4.2	------	1.5	1.5	.88	.88	.36	.52	.62
31	.74	------	3.0	3.8	------	1.5	------	.74	------	.36	.59	------
TOTAL	29.22	44.26	106.26	87.9	122.2	57.3	54.4	32.00	22.92	20.38	16.97	24.34
MEAN	.94	1.48	3.43	2.84	4.21	1.85	1.81	1.03	.76	.66	.55	.81
MAX	1.3	5.3	16	8.1	16	2.3	3.2	1.5	.88	1.1	.62	6.4
MIN	.52	.74	.88	2.1	2.3	1.5	1.3	.74	.74	.36	.36	.52
AC-FT	58	88	211	174	242	114	108	63	45	40	34	48

WTR YR 1972 TOTAL 618.15 MEAN 1.69 MAX 16 MIN .36 AC-FT 1,230

PEAK DISCHARGE (BASE, 100 CFS).--No peak above base.

11159700 APTOS CREEK AT APTOS, CALIF.

LOCATION.--Lat 36°58'33", long 121°54'05", in Aptos Grant, Santa Cruz County, on left bank at Aptos 0.6 mile upstream from mouth.

DRAINAGE AREA.--12.3 sq mi (revised).

PERIOD OF RECORD.--October 1958 to September 1972 (discontinued).

GAGE.--Water-stage recorder. Altitude of gage is 10 ft (from topographic map).

AVERAGE DISCHARGE.--14 years, 7.63 cfs (5,530 acre-ft per year); median of yearly mean discharges, 5.1 cfs (3,700 acre-ft per year).

EXTREMES.--Current year: Maximum discharge, 34 cfs Feb. 5 (gage height, 3.92 ft); minimum daily, 0.40 cfs Sept. 6, 7.
Period of record: Maximum discharge, 2,110 cfs Jan. 31, 1963 (gage height, 10.82 ft), from rating curve extended above 980 cfs; no flow July 1-3, 1966.

REMARKS.--Records fair. No regulation; small diversions above station for irrigation.

DISCHARGE, IN CUBIC FEET PER SECOND, WATER YEAR OCTOBER 1971 TO SEPTEMBER 1972

DAY	OCT	NOV	DEC	JAN	FEB	MAR	APR	MAY	JUN	JUL	AUG	SEP
1	1.2	.84	1.3	2.7	2.9	2.0	1.6	1.4	.79	.84	.69	.50
2	1.1	.88	3.3	2.4	2.7	2.0	1.6	1.3	.84	.89	.70	.50
3	1.0	.90	2.4	2.3	2.6	2.1	1.6	1.3	.84	.89	.71	.45
4	1.0	.96	1.8	2.1	2.7	2.1	1.5	1.4	.82	.86	.78	.45
5	.96	.95	1.4	2.0	18	2.1	2.2	1.4	.81	.81	.80	.45
6	.88	.96	1.3	2.0	14	2.1	2.5	1.3	.83	.78	.79	.40
7	.88	.98	1.4	2.0	8.8	2.1	1.8	1.3	.84	.76	.81	.40
8	.82	1.0	1.4	2.0	6.4	2.1	1.6	1.3	.89	.76	.82	.41
9	.82	1.1	1.4	2.0	5.1	2.1	1.5	1.3	.96	.74	.88	.42
10	.83	1.2	1.6	1.9	4.3	2.2	1.5	1.3	1.1	.73	.93	.43
11	.79	3.6	1.6	1.9	3.9	2.2	2.3	1.2	.93	.72	.92	.43
12	.79	3.7	5.1	1.9	3.5	2.1	2.4	1.1	.88	.74	.86	.43
13	.75	3.3	1.8	1.9	3.1	2.1	2.9	1.1	.88	.74	.80	.45
14	.69	1.2	1.3	1.9	3.1	2.1	2.0	1.1	.87	.71	.75	.47
15	.71	.80	1.2	1.8	2.7	2.1	1.8	1.1	.90	.72	.80	.47
16	.68	.78	1.2	1.7	2.6	2.0	1.7	1.1	.90	.74	.86	.48
17	.73	.76	1.3	1.7	2.4	2.0	1.6	1.1	.91	.83	.84	.48
18	.74	.85	1.3	1.7	2.4	1.8	1.5	1.0	.98	.77	.87	.49
19	.68	1.0	1.3	1.7	2.4	1.7	1.5	1.0	.97	.75	.88	.50
20	.68	1.0	1.3	1.7	2.3	1.7	1.5	1.1	.97	.85	1.0	.51
21	.70	.99	3.3	1.7	2.3	1.7	1.5	1.1	.95	1.1	.99	.53
22	.64	1.0	8.1	1.7	2.4	2.0	1.5	1.1	1.1	.94	1.0	.52
23	.69	1.1	4.0	2.5	2.3	1.8	1.5	1.1	1.1	.85	1.1	.49
24	.64	1.0	11	2.0	2.1	1.7	2.4	1.0	1.0	.81	1.1	.49
25	.64	1.0	18	3.7	2.1	1.7	1.7	1.0	.90	.87	.65	.51
26	.66	1.0	9.1	3.1	2.1	1.7	1.6	1.0	.91	.87	.65	.59
27	.60	1.1	22	8.8	2.1	1.6	1.5	1.0	.91	.87	.65	1.4
28	.65	1.7	8.8	5.9	2.0	1.7	1.4	1.0	.89	.82	.60	.90
29	.72	1.5	5.1	4.3	2.3	1.7	1.4	.99	.89	.86	.60	.59
30	.77	1.4	3.8	3.7	------	1.7	1.4	.84	.87	.77	.55	.54
31	.89	------	3.2	3.3	------	1.6	------	.76	------	.73	.55	------
TOTAL	24.33	38.55	131.1	80.0	115.6	59.6	52.5	35.09	27.43	25.12	24.93	15.68
MEAN	.78	1.29	4.23	2.58	3.99	1.92	1.75	1.13	.91	.81	.80	.52
MAX	1.2	3.7	22	8.8	18	2.2	2.9	1.4	1.1	1.1	1.1	1.4
MIN	.60	.76	1.2	1.7	2.0	1.6	1.4	.76	.79	.71	.55	.40
AC-FT	48	76	260	159	229	118	104	70	54	50	49	31

CAL YR 1971 TOTAL 1,128.80 MEAN 3.09 MAX 29 MIN .60 AC-FT 2,240
WTR YR 1972 TOTAL 629.93 MEAN 1.72 MAX 22 MIN .40 AC-FT 1,250

PEAK DISCHARGE (BASE, 100 CFS).--No peak above base.

11159800 WEST BRANCH SOQUEL CREEK NEAR SOQUEL, CALIF.

LOCATION.--Lat 37°03'03", long 121°56'17", in NW¼ sec.23, T.10 S., R.1 W., Santa Cruz County, on left bank 0.5 mile upstream from Soquel Creek, and 4.5 miles north of Soquel.

DRAINAGE AREA.--12.2 sq mi.

PERIOD OF RECORD.--October 1958 to September 1972 (discontinued).

GAGE.--Water-stage recorder. Altitude of gage is 220 ft (from topographic map).

AVERAGE DISCHARGE.--14 years, 12.4 cfs (8,980 acre-ft per year); median of yearly mean discharges, 9.5 cfs (6,900 acre-ft per year).

EXTREMES.--Current year: Maximum discharge, 94 cfs Dec. 24 (gage height, 3.80 ft); minimum daily, 0.56 cfs Aug. 31.

Period of record: Maximum discharge, 4,530 cfs Jan. 24, 1967 (gage height, 11.47 ft, from high-water mark in well), from rating curve extended above 740 cfs on basis of slope-area measurement at gage height 7.96 ft; minimum daily, 0.50 cfs July 14, 1961.

REMARKS.--Records good. No regulation; small diversions above station for irrigation.

DISCHARGE, IN CUBIC FEET PER SECOND, WATER YEAR OCTOBER 1971 TO SEPTEMBER 1972

DAY	OCT	NOV	DEC	JAN	FEB	MAR	APR	MAY	JUN	JUL	AUG	SEP
1	1.2	.83	1.7	3.9	5.4	3.1	2.1	1.4	1.4	1.2	.87	.62
2	1.1	1.0	7.3	3.5	4.9	3.1	2.1	1.6	1.4	1.1	.82	.64
3	1.1	1.1	4.1	3.3	4.6	3.1	1.9	1.4	1.4	1.1	.73	.67
4	.96	1.2	2.8	3.1	4.6	3.1	1.7	1.6	1.3	1.1	.81	.67
5	.93	1.1	1.7	2.9	41	2.9	2.7	1.7	1.3	.98	.80	.69
6	.94	1.1	1.5	2.9	16	2.7	3.3	1.7	1.2	1.0	.77	.75
7	.94	1.1	1.5	2.7	10	2.7	2.3	1.7	1.3	1.0	.79	.76
8	.95	1.2	1.5	2.7	8.3	2.7	1.9	1.7	1.4	.93	.84	.78
9	.85	1.2	1.6	2.7	7.0	2.7	1.9	1.7	1.5	.94	.86	.80
10	.85	1.2	1.7	2.7	6.2	3.1	1.9	1.6	1.8	.95	.85	.86
11	.85	8.0	1.7	2.7	5.7	2.7	3.9	1.4	1.6	.90	.75	.88
12	.84	5.3	2.7	2.7	5.2	2.5	5.4	1.6	1.4	.92	.72	.87
13	.76	8.4	2.5	2.7	4.9	2.3	6.0	1.4	1.4	.90	.62	.87
14	.73	3.1	1.9	2.3	4.9	2.5	3.5	1.4	1.4	.82	.67	.90
15	.78	1.8	1.7	2.3	4.6	2.3	3.1	1.3	1.3	.85	.68	.89
16	.81	1.7	1.6	2.3	4.4	2.1	2.7	1.1	1.4	.96	.70	.90
17	.95	1.5	1.6	2.3	4.4	2.1	2.7	1.1	1.3	1.1	.74	.94
18	.96	1.5	1.6	2.3	4.4	2.1	2.5	1.1	1.4	1.0	.75	.96
19	.75	1.5	1.5	2.3	4.1	2.1	2.3	1.4	1.4	1.1	.76	.95
20	.73	1.4	1.4	2.3	3.9	1.6	2.3	1.6	1.3	1.3	.80	.95
21	.73	1.4	3.5	2.3	3.5	1.7	2.3	1.6	1.4	1.6	.82	.93
22	.73	1.4	21	2.3	4.9	2.3	2.3	1.4	1.4	1.2	.74	.79
23	.69	1.5	5.3	2.7	3.9	2.1	2.1	1.3	1.5	1.1	.70	.77
24	.74	1.5	39	2.5	3.7	1.9	3.1	1.3	1.4	1.1	.71	.80
25	.70	1.5	43	7.4	3.5	2.1	2.5	1.3	1.2	1.0	.70	.84
26	.68	1.4	16	5.7	3.5	2.1	2.1	1.4	1.3	.95	.69	.98
27	.64	1.4	33	33	3.3	2.1	1.9	1.4	1.2	.97	.74	3.0
28	.66	2.5	10	15	3.3	2.1	1.7	1.3	1.2	.95	.70	1.3
29	.74	2.9	6.2	8.8	3.5	2.1	1.7	1.3	1.2	.92	.62	.96
30	.77	2.0	4.9	6.5	------	2.1	1.7	1.3	1.2	.91	.60	.87
31	.86	------	4.4	5.7	------	2.1	------	1.3	------	.89	.56	------
TOTAL	25.92	62.73	229.9	146.5	187.6	74.2	77.6	44.4	40.9	31.74	22.91	27.59
MEAN	.84	2.09	7.42	4.73	6.47	2.39	2.59	1.43	1.36	1.02	.74	.92
MAX	1.2	8.4	43	33	41	3.1	6.0	1.7	1.8	1.6	.87	3.0
MIN	.64	.83	1.4	2.3	3.3	1.6	1.7	1.1	1.2	.82	.56	.62
AC-FT	51	124	456	291	372	147	154	88	81	63	45	55

CAL YR 1971 TOTAL 1,830.40 MEAN 5.01 MAX 70 MIN .64 AC-FT 3,630
WTR YR 1972 TOTAL 971.99 MEAN 2.66 MAX 43 MIN .56 AC-FT 1,930

PEAK DISCHARGE (BASE, 400 CFS).--No peak above base.

11159940 SOQUEL CREEK NEAR SOQUEL, CALIF.

LOCATION.--Lat 37°02'02", long 121°56'35", in NW¼ sec.26, T.10 S., R.1 W., Santa Cruz County, on right bank 30 ft downstream from private road bridge, 1.1 miles downstream from West Branch, and 3.4 miles north of town of Soquel.

DRAINAGE AREA.--32.0 sq mi.

PERIOD OF RECORD.--October 1968 to September 1972 (discontinued).

GAGE.--Water-stage recorder. Altitude of gage is 140 ft (from topographic map). Prior to June 5, 1970, at datum 1.00 ft higher.

EXTREMES.--Current year: Maximum discharge, 236 cfs Dec. 24 (gage height, 2.85 ft); minimum daily, 0.30 cfs July 9.
Period of record: Maximum discharge, 2,700 cfs Feb. 15, 1969 (gage height, 9.03 ft, present datum); minimum daily, 0.30 cfs July 9, 1972.

REMARKS.--Records fair. No regulation; small diversion above station for irrigation and mill pond.

REVISIONS (WATER YEARS).--WRD Calif. 1971: 1970.

DISCHARGE, IN CUBIC FEET PER SECOND, WATER YEAR OCTOBER 1971 TO SEPTEMBER 1972

DAY	OCT	NOV	DEC	JAN	FEB	MAR	APR	MAY	JUN	JUL	AUG	SEP
1	1.3	1.6	3.2	14	19	8.1	4.7	3.5	1.3	.98	.98	.64
2	1.3	1.6	14	11	17	7.8	4.7	3.1	1.7	.91	.98	.66
3	1.3	1.6	9.5	9.5	15	7.8	4.7	3.1	2.0	.98	.91	.66
4	1.3	1.6	7.4	8.4	14	7.8	4.5	3.1	1.9	1.1	.91	.66
5	1.3	1.6	5.3	7.8	112	7.8	5.9	3.3	1.8	.98	.84	.66
6	1.3	1.6	4.5	7.1	65	7.4	8.1	3.7	1.6	1.3	.84	.70
7	1.3	1.6	4.2	7.1	40	6.7	5.9	4.0	1.5	1.1	.79	.70
8	1.3	1.6	3.7	6.7	29	6.7	5.3	4.4	1.5	.87	1.9	.70
9	1.3	1.6	3.7	6.4	25	6.7	4.7	4.4	1.6	.30	.70	.70
10	1.4	1.6	3.7	6.1	21	7.1	4.5	4.0	1.9	.70	.70	.70
11	1.4	8.9	3.7	6.1	18	7.1	8.5	3.7	2.1	.91	.68	.70
12	1.4	11	6.1	5.9	16	7.1	13	3.3	2.1	1.3	.66	.75
13	1.4	13	6.4	5.9	14	6.7	17	3.1	1.8	1.4	.66	.75
14	1.4	8.1	5.0	5.9	13	6.4	9.5	2.8	1.6	1.3	.68	.80
15	1.4	4.7	4.5	5.6	12	6.1	7.4	2.6	1.5	1.3	.70	.80
16	1.4	3.4	4.2	5.3	12	5.9	6.7	2.6	1.4	1.5	.68	.80
17	1.4	3.0	4.2	5.0	11	5.9	5.9	2.4	1.5	1.5	.68	.80
18	1.4	2.8	3.9	5.0	11	5.6	5.6	2.4	1.5	1.4	.68	.70
19	1.5	2.8	3.7	5.0	10	5.3	5.0	2.6	1.5	1.5	.68	.70
20	1.5	2.6	3.7	5.0	10	5.0	4.7	3.1	1.5	1.4	.70	.70
21	1.5	2.4	5.8	5.0	9.9	4.7	4.5	3.1	1.5	1.5	.70	.70
22	1.5	2.4	59	5.0	12	5.3	4.5	3.1	1.5	1.6	.68	.70
23	1.5	2.4	34	5.0	12	5.6	4.2	3.1	1.5	1.3	.66	.65
24	1.5	2.4	89	5.0	10	5.3	7.8	2.9	1.5	1.2	.64	.65
25	1.5	2.4	109	17	9.5	5.3	6.7	2.9	1.4	1.1	.62	.65
26	1.5	2.4	53	19	9.1	5.0	5.9	2.9	1.4	1.1	.70	.80
27	1.5	2.4	102	58	8.8	5.0	5.3	2.4	1.3	1.1	.70	7.0
28	1.6	3.4	46	38	8.5	4.7	4.2	2.3	1.2	1.1	.70	1.5
29	1.6	3.5	28	27	8.5	4.7	3.7	2.3	1.1	.98	.70	.90
30	1.6	3.5	22	22	------	4.7	3.5	1.8	1.1	.91	.70	.65
31	1.6	------	19	20	------	4.7	------	2.5	------	.98	.64	------
TOTAL	44.2	103.5	671.4	359.8	572.3	190.0	186.6	94.5	46.8	35.60	23.79	28.48
MEAN	1.43	3.45	21.7	11.6	19.7	6.13	6.22	3.05	1.56	1.15	.77	.95
MAX	1.6	13	109	58	112	8.1	17	4.4	2.1	1.6	1.9	7.0
MIN	1.3	1.6	3.2	5.0	8.5	4.7	3.5	1.8	1.1	.30	.62	.64
AC-FT	88	205	1,330	714	1,140	377	370	187	93	71	47	56

CAL YR 1971 TOTAL 4,822.48 MEAN 13.2 MAX 151 MIN .74 AC-FT 9,570
WTR YR 1972 TOTAL 2,356.97 MEAN 6.44 MAX 112 MIN .30 AC-FT 4,680

PEAK DISCHARGE (BASE, 750 CFS).--No peak above base.

11160000 SOQUEL CREEK AT SOQUEL, CALIF.

LOCATION.--Lat 36°59'29", long 121°57'17", in NE¼ sec.10, T.11 S., R.1 W., Santa Cruz County, on left bank 0.2 mile upstream from highway bridge in town of Soquel, and 0.4 mile downstream from Bates Creek.

DRAINAGE AREA.--40.2 sq mi.

PERIOD OF RECORD.--May 1951 to current year.

GAGE.--Water-stage recorder. Datum of gage is 21.38 ft above mean sea level.

AVERAGE DISCHARGE.--21 years, 42.6 cfs (30,860 acre-ft per year); median of yearly mean discharges, 31 cfs (22,500 acre-ft per year).

EXTREMES.--Current year: Maximum discharge, 377 cfs Dec. 24 (gage height, 4.54 ft); minimum daily, 0.11 cfs Aug. 6.
Period of record: Maximum discharge, 15,800 cfs Dec. 23, 1955 (gage height, 22.33 ft), from rating curve extended above 2,900 cfs on basis of slope-area measurement of maximum flow; minimum daily, 0.10 cfs Aug. 12, 19, 1964.

REMARKS.--Records fair. No regulation; small diversion above station for irrigation. Records of water temperatures for the current year are published in Part 2 of this report.

DISCHARGE, IN CUBIC FEET PER SECOND, WATER YEAR OCTOBER 1971 TO SEPTEMBER 1972

DAY	OCT	NOV	DEC	JAN	FEB	MAR	APR	MAY	JUN	JUL	AUG	SEP
1	1.9	1.5	4.2	15	19	10	5.5	3.7	1.6	3.9	.50	2.5
2	1.7	1.9	16	14	17	9.6	5.5	3.5	1.4	2.5	.31	3.1
3	1.5	1.8	10	13	15	9.6	5.5	4.0	1.9	1.3	.39	3.1
4	1.5	1.8	5.5	12	16	9.1	5.5	4.3	1.9	1.4	.41	1.6
5	1.4	1.7	3.4	12	202	9.1	6.5	4.6	1.6	1.6	.12	.57
6	1.6	1.6	2.7	11	105	8.7	8.7	4.9	1.4	1.5	.11	.60
7	1.3	1.5	2.7	11	50	8.3	6.6	4.6	1.5	1.1	.26	.96
8	1.5	1.6	2.4	10	35	8.3	5.5	4.6	1.4	1.8	.73	1.0
9	1.5	2.0	2.4	10	28	8.3	5.2	4.3	1.9	2.7	.62	1.0
10	1.6	2.1	2.7	10	23	9.1	5.2	4.3	2.7	1.4	.42	1.2
11	1.7	8.8	2.7	9.6	19	8.7	9.6	4.3	2.8	1.6	.34	1.2
12	1.7	13	11	9.6	17	7.7	12	4.0	2.4	2.1	.19	1.3
13	1.5	18	5.5	9.6	16	7.3	19	3.5	2.1	1.9	.19	2.1
14	1.7	7.6	3.4	9.1	15	7.3	9.6	3.0	1.5	1.6	.58	2.8
15	2.2	3.4	2.7	9.1	14	6.9	7.3	3.0	1.5	1.7	.48	2.4
16	2.5	2.1	2.4	8.7	14	6.9	6.6	3.0	1.8	2.5	1.3	2.4
17	2.5	1.9	2.1	8.7	13	6.6	6.2	2.7	1.7	2.5	2.1	2.7
18	3.0	1.9	2.1	8.7	13	6.2	5.9	3.0	2.7	2.3	1.8	4.6
19	2.9	2.4	2.1	8.7	12	6.2	5.5	3.2	2.9	2.7	1.6	4.4
20	2.8	2.4	2.1	8.7	12	5.9	5.2	3.7	2.7	3.0	1.8	4.0
21	2.6	2.4	12	8.3	12	5.5	4.9	3.5	2.7	3.2	1.5	3.7
22	2.7	2.4	80	8.3	14	6.6	4.9	4.0	3.7	3.0	2.4	4.0
23	2.8	3.1	50	10	13	6.2	4.9	3.0	4.4	2.5	2.3	4.4
24	2.7	3.1	180	9.1	12	6.0	7.7	2.7	3.0	1.9	2.3	3.7
25	1.3	3.4	160	20	11	5.8	6.2	3.5	1.7	.70	3.1	3.8
26	1.3	3.4	80	17	11	5.4	4.9	3.7	2.5	.33	3.2	4.4
27	1.4	3.4	130	91	10	5.4	4.6	3.0	3.7	.33	2.4	7.5
28	1.8	5.5	60	48	10	5.0	4.3	2.1	3.9	.70	2.3	1.7
29	2.1	5.0	30	29	11	5.0	3.7	1.9	3.6	.33	2.3	.85
30	1.2	4.6	22	23	------	5.0	3.7	1.7	3.4	.50	2.0	.70
31	1.4	------	18	21	------	5.0	------	1.7	------	.33	2.5	------
TOTAL	59.3	115.3	910.1	493.2	759	220.7	196.4	107.0	72.0	54.92	40.55	78.28
MEAN	1.91	3.84	29.4	15.9	26.2	7.12	6.55	3.45	2.40	1.77	1.31	2.61
MAX	3.0	18	180	91	202	10	19	4.9	4.4	3.9	3.2	7.5
MIN	1.2	1.5	2.1	8.3	10	5.0	3.7	1.7	1.4	.33	.11	.57
AC-FT	118	229	1,810	978	1,510	438	390	212	143	109	80	155

CAL YR 1971 TOTAL 6,620.88 MEAN 18.1 MAX 213 MIN .23 AC-FT 13,130
WTR YR 1972 TOTAL 3,106.75 MEAN 8.49 MAX 202 MIN .11 AC-FT 6,160

PEAK DISCHARGE (BASE, 1,000 CFS).--No peak above base.

11160020 SAN LORENZO RIVER NEAR BOULDER CREEK, CALIF.

LOCATION.--Lat 37°12'24", long 122°08'38", in NE¼SW¼ sec.25, T.8 S., R.3 W., Santa Cruz County, on right bank 22 ft upstream from culvert on State Highway 9, 100 ft upstream from small right-bank tributary, and 5.8 miles north of town of Boulder Creek.

DRAINAGE AREA.--6.17 sq mi.

PERIOD OF RECORD.--July 1968 to current year.

GAGE.--Water-stage recorder. Concrete control since Sept. 1, 1971. Altitude of gage is 710 ft (from topographic map).

EXTREMES.--Current year: Maximum discharge, 24 cfs Dec. 27 (gage height, 2.62 ft); minimum daily, 0.18 cfs Sept. 1.
Period of record: Maximum discharge, 600 cfs Jan. 26, 1969 (gage height, 8.48 ft), from rating curve extended above 200 cfs on basis of computation of maximum flow through culvert; minimum daily, 0.18 cfs Sept. 1, 1972.

REMARKS.--Records fair. No regulation or diversion above station.

REVISIONS (WATER YEARS).--WRD Calif. 1970: 1969(M).

DISCHARGE, IN CUBIC FEET PER SECOND, WATER YEAR OCTOBER 1971 TO SEPTEMBER 1972

DAY	OCT	NOV	DEC	JAN	FEB	MAR	APR	MAY	JUN	JUL	AUG	SEP
1	.56	.56	.91	2.4	1.5	2.2	1.3	.96	.73	.68	.27	.18
2	.56	.53	2.0	2.0	1.7	2.0	1.0	.94	.82	.98	.29	.20
3	.51	.48	1.6	1.8	1.6	2.0	.90	1.2	.89	.57	.32	.20
4	.50	.56	1.5	1.5	1.7	2.0	.90	1.2	.79	.56	.34	.26
5	.50	.56	1.1	1.5	7.1	2.0	1.1	1.3	.79	.56	.30	.27
6	.48	.56	1.1	1.5	4.7	2.0	1.2	1.3	.88	.56	.26	.26
7	.48	.61	1.1	1.5	3.3	2.0	.91	1.4	1.0	.51	.23	.26
8	.48	.70	.91	1.3	3.2	2.0	.90	1.5	1.0	.47	.29	.26
9	.48	.70	1.2	1.3	2.9	1.8	.90	1.5	1.1	.49	.29	.26
10	.48	.70	1.3	1.1	2.5	1.8	.90	1.4	1.4	.51	.27	.29
11	.48	4.3	1.3	1.1	2.4	1.7	1.3	1.3	1.3	.54	.26	.32
12	.48	2.5	1.9	1.1	2.3	1.5	2.1	1.3	1.4	.39	.26	.32
13	.45	5.2	1.6	1.1	2.0	1.5	2.1	1.4	1.3	.32	.28	.31
14	.45	2.6	1.3	.90	2.0	1.5	1.4	1.3	1.2	.32	.33	.26
15	.49	1.7	1.3	.90	2.0	1.4	1.2	1.4	1.2	.32	.32	.26
16	.54	.70	1.1	.91	2.1	1.3	1.1	1.4	1.1	.36	.32	.26
17	.56	.70	1.1	.90	2.1	1.3	1.1	1.5	1.2	.40	.32	.29
18	.56	.70	1.1	.90	2.1	1.3	1.1	1.5	1.2	.40	.32	.32
19	.53	.70	1.1	.90	2.1	1.3	1.0	1.7	.90	.40	.34	.32
20	.52	.70	1.1	.90	2.0	1.3	1.1	1.8	.97	.40	.33	.32
21	.54	.70	2.4	.90	2.0	1.3	1.1	1.8	.88	.48	.28	.30
22	.49	.70	8.2	.95	2.1	1.6	1.1	1.8	1.0	.46	.26	.26
23	.53	.70	2.8	1.2	2.4	1.5	1.0	1.6	.92	.45	.25	.26
24	.56	.70	6.0	1.0	2.4	1.5	1.2	1.6	.82	.40	.26	.29
25	.53	.70	14	1.5	2.4	1.5	1.0	1.3	.70	.40	.26	.32
26	.48	.75	6.9	1.5	2.3	1.5	1.0	1.4	.70	.32	.26	.36
27	.50	.97	17	3.5	2.0	1.3	.98	1.2	.62	.30	.26	.91
28	.48	2.1	11	2.4	1.8	1.3	1.0	1.1	.56	.26	.26	.52
29	.48	1.3	7.2	2.0	2.5	1.3	1.1	.86	.56	.29	.25	.50
30	.48	1.0	5.0	1.8	------	1.3	1.0	.56	.56	.28	.20	.50
31	.54	------	3.5	1.5	------	1.3	------	.53	------	.27	.20	------
TOTAL	15.70	35.38	109.62	43.76	71.2	49.3	33.99	41.05	28.49	13.65	8.68	9.64
MEAN	.51	1.18	3.54	1.41	2.46	1.59	1.13	1.32	.95	.44	.28	.32
MAX	.56	5.2	17	3.5	7.1	2.2	2.1	1.8	1.4	.98	.34	.91
MIN	.45	.48	.91	.90	1.5	1.3	.90	.53	.56	.26	.20	.18
AC-FT	31	70	217	87	141	98	67	81	57	27	17	19

CAL YR 1971 TOTAL 959.81 MEAN 2.63 MAX 23 MIN .32 AC-FT 1,900
WTR YR 1972 TOTAL 460.46 MEAN 1.26 MAX 17 MIN .18 AC-FT 913

PEAK DISCHARGE (BASE, 70 CFS).--No peak above base.

11160300 ZAYANTE CREEK AT ZAYANTE, CALIF.

LOCATION.--Lat 37°05'10", long 122°02'45", in SE¼ sec.2, T.10 S., R.2 W., Santa Cruz County, on left bank at downstream side of bridge on Zayante Road in town of Zayante, 0.4 mile upstream from Lompico Creek, 2.0 miles east of Ben Lomond, and 3.2 miles upstream from mouth.

DRAINAGE AREA.--11.1 sq mi.

PERIOD OF RECORD.--October 1957 to current year.

GAGE.--Water-stage recorder. Altitude of gage is 390 ft (from topographic map).

AVERAGE DISCHARGE.--15 years, 10.9 cfs (7,900 acre-ft per year); median of yearly mean discharges, 7.3 cfs (5,300 acre-ft per year).

EXTREMES.--Current year: Maximum discharge, 62 cfs Dec. 27 (gage height, 2.56 ft); minimum daily, 0.10 cfs July 29 to Aug. 2.

Period of record: Maximum discharge, 3,700 cfs Apr. 2, 1958 (gage height, 7.70 ft), from rating curve extended above 1,200 cfs on basis of slope-area measurement of maximum flow; no flow at times, caused by filling of pools upstream.

REMARKS.--Records good. No known regulation; only small diversion above station for individual use. Records of water temperatures and suspended-sediment discharge for the current year are published in Part 2 of this report.

DISCHARGE, IN CUBIC FEET PER SECOND, WATER YEAR OCTOBER 1971 TO SEPTEMBER 1972

DAY	OCT	NOV	DEC	JAN	FEB	MAR	APR	MAY	JUN	JUL	AUG	SEP
1	.57	.30	.82	3.0	3.6	1.6	.96	.87	.64	.40	.10	.12
2	.53	.33	6.0	2.7	3.4	1.5	.92	.87	.64	.40	.10	.13
3	.46	.36	3.4	2.3	3.4	1.4	.92	.87	.64	.45	.15	.15
4	.46	.36	2.6	2.1	3.6	1.4	.92	.87	.60	.45	.15	.15
5	.43	.33	1.6	2.0	15	1.4	1.5	1.0	.50	.44	.15	.15
6	.38	.36	1.4	2.0	7.3	1.3	1.9	.96	.38	.40	.15	.14
7	.38	.36	1.3	2.0	5.1	1.3	1.3	.96	.38	.40	.15	.15
8	.38	.41	1.2	1.9	3.9	1.3	1.1	.96	.57	.30	.18	.16
9	.33	.46	1.2	1.9	3.6	1.3	.96	.92	.64	.30	.18	.16
10	.28	.46	1.3	1.9	3.2	1.3	.92	.92	.75	.30	.18	.16
11	.30	3.4	1.3	1.8	2.9	1.3	2.6	.87	.64	.20	.15	.16
12	.33	1.9	2.9	1.8	2.6	1.2	4.5	.82	.57	.20	.14	.15
13	.30	3.8	2.1	1.8	2.5	1.1	4.1	.82	.57	.15	.13	.15
14	.30	1.5	1.4	1.7	2.4	1.1	2.2	.82	.57	.15	.12	.15
15	.28	.82	1.3	1.6	2.2	1.1	1.8	.75	.64	.15	.13	.15
16	.30	.75	1.3	1.6	2.2	1.1	1.6	.71	.60	.15	.16	.16
17	.36	.64	1.2	1.6	2.1	1.1	1.4	.71	.60	.15	.15	.18
18	.33	.64	1.2	1.6	2.0	1.0	1.3	.71	.60	.15	.15	.18
19	.33	.64	1.2	1.5	2.0	1.0	1.2	.78	.64	.15	.14	.16
20	.36	.64	1.2	1.5	2.0	.96	1.1	.82	.64	.15	.15	.15
21	.30	.71	5.2	1.5	2.0	.96	1.1	.82	.60	.15	.15	.14
22	.33	.82	15	1.5	2.5	1.1	1.1	.78	.64	.15	.14	.14
23	.36	.82	4.6	1.8	2.0	1.1	1.1	.78	.71	.15	.13	.13
24	.33	.75	16	1.5	1.8	1.0	1.4	.75	.64	.15	.13	.14
25	.33	.75	25	5.8	1.7	.96	1.1	.75	.60	.15	.14	.16
26	.33	.75	11	3.8	1.7	.92	1.1	.75	.57	.15	.18	.18
27	.30	.82	27	17	1.6	.96	.96	.71	.46	.15	.18	1.7
28	.28	1.4	7.3	7.8	1.6	.96	.92	.68	.41	.15	.16	.53
29	.25	1.3	4.9	5.3	1.7	.96	.92	.68	.33	.10	.14	.36
30	.25	1.0	3.8	4.4	------	.96	.92	.64	.35	.10	.14	.30
31	.30	------	3.3	3.9	------	.96	------	.64	------	.10	.13	------
TOTAL	10.75	27.58	159.02	92.6	91.6	35.60	43.82	24.99	17.12	6.94	4.53	6.84
MEAN	.35	.92	5.13	2.99	3.16	1.15	1.46	.81	.57	.22	.15	.23
MAX	.57	3.8	27	17	15	1.6	4.5	1.0	.75	.45	.18	1.7
MIN	.25	.30	.82	1.5	1.6	.92	.92	.64	.33	.10	.10	.12
AC-FT	21	55	315	184	182	71	87	50	34	14	9.0	14

CAL YR 1971 TOTAL 1,268.16 MEAN 3.47 MAX 45 MIN .04 AC-FT 2,520
WTR YR 1972 TOTAL 521.39 MEAN 1.42 MAX 27 MIN .10 AC-FT 1,030

PEAK DISCHARGE (BASE, 450 CFS).--No peak above base.

11160500 SAN LORENZO RIVER AT BIG TREES, CALIF.

LOCATION.--Lat 37°01'49", long 122°03'24", in Canada del Rincon Grant, Santa Cruz County, on right bank 0.5 mile south of Big Trees station on Southern Pacific Railroad, 1.6 miles downstream from Zayante Creek, and 4 miles north of Santa Cruz.

DRAINAGE AREA.--111 sq mi.

PERIOD OF RECORD.--October 1936 to current year. Monthly discharge only for some periods, published in WSP 1315-B.

GAGE.--Water-stage recorder. Datum of gage is 217.0 ft above mean sea level (levels by Topographic Division).

AVERAGE DISCHARGE.--36 years, 134 cfs (97,080 acre-ft per year); median of yearly mean discharges, 110 cfs (79,700 acre-ft per year).

EXTREMES.--Current year: Maximum discharge, 1,060 cfs Dec. 27 (gage height, 4.75 ft); minimum daily, 8.3 cfs Aug. 11, 24, 25, Sept. 6.
Period of record: Maximum discharge, 30,400 cfs Dec. 23, 1955 (gage height, 22.55 ft), from rating curve extended above 11,000 cfs on basis of slope-area measurement of maximum flow; minimum, 0.8 cfs (regulated) June 25, 1939; minimum daily, 7.5 cfs July 1, 1939.

REMARKS.--Records good. Flow regulated by Loch Lomond Reservoir since 1961 (capacity, 8,400 acre-ft). Many small diversions above station for domestic supply. Records of water temperatures for the current year are published in Part 2 of this report.

REVISIONS (WATER YEARS).--WSP 1315-B: 1938(M). WSP 1715: Drainage area.

DISCHARGE, IN CUBIC FEET PER SECOND, WATER YEAR OCTOBER 1971 TO SEPTEMBER 1972

DAY	OCT	NOV	DEC	JAN	FEB	MAR	APR	MAY	JUN	JUL	AUG	SEP
1	16	16	24	65	51	39	24	24	15	12	9.2	8.5
2	16	16	90	59	48	37	24	23	15	12	9.1	8.9
3	15	15	61	54	46	36	23	23	14	12	9.5	8.8
4	15	15	48	49	48	36	23	23	14	11	9.7	9.7
5	15	15	33	48	380	35	35	24	17	11	9.6	9.2
6	14	15	30	46	202	34	47	24	14	11	9.2	8.3
7	15	15	26	44	122	33	31	24	12	11	9.2	9.1
8	14	15	25	43	95	33	27	23	13	11	9.3	8.9
9	16	15	26	41	81	33	26	22	14	10	9.3	8.9
10	15	15	28	40	71	34	25	22	15	10	8.9	9.7
11	14	56	28	39	63	32	40	22	15	10	8.3	9.2
12	14	55	85	37	59	31	79	21	15	10	8.6	11
13	14	90	52	37	55	30	82	20	15	9.5	9.2	9.0
14	14	40	36	36	53	30	45	19	13	9.7	11	8.7
15	19	25	33	35	51	29	37	19	13	9.6	10	9.0
16	15	21	29	35	49	28	34	19	13	10	9.4	9.0
17	17	20	28	34	48	28	32	19	13	11	9.2	8.8
18	14	20	27	33	46	28	30	17	13	11	8.9	10
19	15	19	26	34	45	27	30	18	13	10	9.1	13
20	15	20	26	33	44	26	28	19	13	10	9.3	11
21	15	20	58	33	43	26	27	20	13	11	9.5	9.6
22	15	19	280	34	50	28	27	18	13	11	8.4	8.8
23	15	20	121	41	45	28	26	17	13	11	8.5	8.7
24	16	19	238	36	43	26	34	17	13	11	8.3	8.8
25	15	20	461	97	42	26	29	18	13	9.9	8.3	9.3
26	15	20	232	80	40	25	27	18	13	9.7	9.2	9.0
27	15	20	640	214	39	25	25	18	12	9.5	9.1	38
28	15	39	188	120	38	25	25	17	13	9.6	9.4	21
29	14	37	116	80	43	25	24	16	12	9.3	8.9	13
30	14	28	88	63	------	24	24	16	12	9.5	8.8	12
31	15	------	74	56	------	24	------	16	------	9.4	8.6	------
TOTAL	466	760	3,257	1,696	2,040	921	990	616	406	322.7	283.0	326.9
MEAN	15.0	25.3	105	54.7	70.3	29.7	33.0	19.9	13.5	10.4	9.13	10.9
MAX	19	90	640	214	380	39	82	24	17	12	11	38
MIN	14	15	24	33	38	24	23	16	12	9.3	8.3	8.3
AC-FT	924	1,510	6,460	3,360	4,050	1,830	1,960	1,220	805	640	561	648

CAL YR 1971 TOTAL 21,397.0 MEAN 58.6 MAX 640 MIN 12 AC-FT 42,440
WTR YR 1972 TOTAL 12,084.6 MEAN 33.0 MAX 640 MIN 8.3 AC-FT 23,970

PEAK DISCHARGE (BASE, 1,400 CFS).--No peak above base.

11161570 MAJORS CREEK NEAR SANTA CRUZ, CALIF.

LOCATION.--Lat 36°59'55", long 122°07'13", in Refugio Grant, Santa Cruz County, on left bank 1.5 miles downstream from small left-bank tributary, 1.7 miles upstream from State Highway No. 1, and 5.5 miles northwest of Santa Cruz Post Office.

DRAINAGE AREA.--3.77 sq mi.

PERIOD OF RECORD.--October 1969 to current year.

GAGE.--Water-stage recorder and concrete control. Datum of gage is 348 ft above mean sea level (levels by city of Santa Cruz).

EXTREMES.--Current year: Maximum discharge, 145 cfs Dec. 27 (gage height, 5.20 ft); minimum daily, 0.92 cfs Sept. 29, 30.

Period of record: Maximum discharge, 363 cfs Jan. 21, 1970 (gage height, 5.92 ft), from rating curve extended above 160 cfs on basis of slope-area measurement of maximum flow; minimum daily, 0.92 cfs Sept. 29, 30, 1972.

REMARKS.--Records good. No regulation or diversion above station. Records of discharge include flow diverted through pipeline from pool for municipal supply of city of Santa Cruz as determined by sparling-meter readings furnished by city of Santa Cruz.

DISCHARGE, IN CUBIC FEET PER SECOND, WATER YEAR OCTOBER 1971 TO SEPTEMBER 1972

DAY	OCT	NOV	DEC	JAN	FEB	MAR	APR	MAY	JUN	JUL	AUG	SEP
1	1.2	1.1	1.4	3.2	1.8	1.9	1.5	1.4	1.2	1.2	1.0	.95
2	1.2	1.1	2.2	2.8	1.6	1.8	1.5	1.4	1.2	1.2	1.0	.95
3	1.2	1.1	1.5	2.6	1.7	1.8	1.5	1.4	1.2	1.2	1.1	.95
4	1.2	1.1	2.0	2.2	1.9	1.8	1.5	1.4	1.2	1.2	1.1	.95
5	1.2	1.1	1.7	1.9	26	1.8	1.5	1.4	1.2	1.2	1.1	.95
6	1.2	1.1	1.3	1.8	13	1.8	1.6	1.4	1.2	1.1	1.1	.95
7	1.2	1.1	1.4	1.8	7.0	1.8	1.6	1.4	1.2	1.1	1.1	.93
8	1.2	1.1	1.5	1.7	4.6	1.8	1.6	1.4	1.2	1.1	1.1	.93
9	1.2	1.1	1.5	1.7	3.4	1.7	1.6	1.4	1.2	1.1	1.1	.93
10	1.2	1.1	1.5	1.7	3.1	1.7	1.6	1.4	1.2	1.1	1.1	.93
11	1.2	1.5	1.5	1.7	2.6	1.7	1.6	1.3	1.2	1.1	1.1	.93
12	1.2	2.1	9.7	1.6	2.3	1.7	2.3	1.3	1.2	1.1	1.1	.93
13	1.2	4.4	3.1	1.6	2.1	1.7	2.3	1.3	1.2	1.1	1.1	.93
14	1.2	1.4	2.2	1.6	2.1	1.7	1.6	1.3	1.2	1.1	1.1	.93
15	1.2	1.5	1.7	1.6	1.9	1.7	1.6	1.3	1.2	1.1	1.1	.93
16	1.2	1.3	1.5	1.6	2.1	1.6	1.6	1.3	1.2	1.1	1.1	.93
17	1.2	1.1	1.5	1.6	2.0	1.6	1.6	1.3	1.2	1.1	.99	.93
18	1.2	1.2	1.5	1.6	2.0	1.6	1.6	1.3	1.2	1.1	.99	.93
19	1.2	1.2	1.5	1.6	2.0	1.6	1.6	1.3	1.2	1.1	.99	.93
20	1.2	1.2	1.5	1.6	2.0	1.6	1.5	1.3	1.2	1.1	.99	.93
21	1.2	1.2	2.1	1.6	2.0	1.6	1.5	1.3	1.2	1.1	.99	.94
22	1.2	1.2	7.8	1.6	2.0	1.6	1.5	1.3	1.2	1.1	.99	.94
23	1.2	1.2	4.3	1.9	2.0	1.5	1.5	1.3	1.2	1.1	.99	.94
24	1.2	1.2	13	1.6	1.9	1.5	1.6	1.3	1.2	1.1	.98	.94
25	1.2	1.2	18	5.0	1.9	1.5	1.5	1.2	1.2	1.1	.98	.94
26	1.2	1.2	17	4.5	1.9	1.5	1.5	1.2	1.2	1.1	.98	.94
27	1.2	1.2	52	13	1.9	1.5	1.4	1.2	1.2	1.0	.98	2.5
28	1.1	1.6	10	5.7	1.9	1.5	1.4	1.2	1.2	1.0	.98	1.2
29	1.1	1.4	5.4	3.1	2.0	1.5	1.4	1.2	1.2	1.0	.98	.92
30	1.1	1.4	4.3	2.4	------	1.5	1.4	1.2	1.2	1.0	.98	.92
31	1.1	------	3.5	2.0	------	1.5	------	1.2	------	1.0	.95	------
TOTAL	36.8	40.7	179.1	79.9	102.7	51.1	47.5	40.6	36.0	34.1	32.14	29.90
MEAN	1.19	1.36	5.78	2.58	3.54	1.65	1.58	1.31	1.20	1.10	1.04	1.00
MAX	1.2	4.4	52	13	26	1.9	2.3	1.4	1.2	1.2	1.1	2.5
MIN	1.1	1.1	1.3	1.6	1.6	1.5	1.4	1.2	1.2	1.0	.95	.92
AC-FT	73	81	355	158	204	101	94	81	71	68	64	59

CAL YR 1971 TOTAL 851.50 MEAN 2.33 MAX 52 MIN 1.1 AC-FT 1,690
WTR YR 1972 TOTAL 710.54 MEAN 1.94 MAX 52 MIN .92 AC-FT 1,410

PEAK DISCHARGE (BASE, 80 CFS).--Dec. 27 (0200) 145 cfs (5.20 ft).

11161590 LAGUNA CREEK NEAR DAVENPORT, CALIF.

LOCATION.--Lat 37°01'32", long 122°07'48", in SW¼SW¼ sec.30, T.10 S., R.2 W., Santa Cruz County, on right bank 0.2 mile upstream from Reggiardo Creek, 0.4 mile downstream from small left-bank tributary, and 3.6 miles northeast of Davenport.

DRAINAGE AREA.--3.07 sq mi.

PERIOD OF RECORD.--October 1969 to current year.

GAGE.--Water-stage recorder and concrete control. Altitude of gage is 680 ft (from topographic map).

EXTREMES.--Current year: Maximum discharge, 53 cfs Dec. 27 (gage height, 2.29 ft); minimum daily, 0.28 cfs Aug. 30, 31.
Period of record: Maximum discharge, 264 cfs Jan. 21, 1970 (gage height, 3.60 ft), from rating curve extended above 120 cfs; minimum daily, 0.28 cfs Aug. 30, 31, 1972.

REMARKS.--Records good. No regulation or diversion above station.

DISCHARGE, IN CUBIC FEET PER SECOND, WATER YEAR OCTOBER 1971 TO SEPTEMBER 1972

DAY	OCT	NOV	DEC	JAN	FEB	MAR	APR	MAY	JUN	JUL	AUG	SEP
1	1.3	.84	1.1	3.1	2.0	1.5	.94	1.2	.94	.65	.47	.30
2	1.1	.84	2.3	2.9	1.8	1.5	.94	1.1	.91	.68	.53	.35
3	1.1	.84	1.3	2.7	1.7	1.4	.84	1.1	.89	.68	.53	.35
4	1.0	.84	1.1	2.5	1.8	1.4	.84	1.1	.88	.66	.50	.35
5	1.0	.84	.83	2.4	13	1.3	1.3	1.1	.89	.64	.47	.34
6	1.0	.84	.78	2.2	8.6	1.3	1.4	1.1	.84	.62	.45	.35
7	.94	.84	.71	2.2	5.6	1.3	1.0	1.1	.84	.62	.45	.35
8	.94	.84	.68	2.1	4.4	1.3	.94	1.0	.86	.60	.41	.35
9	.94	.84	.86	2.1	3.5	1.3	.94	1.0	1.0	.60	.41	.35
10	.94	.84	.84	2.1	3.1	1.4	.94	1.0	.96	.60	.39	.35
11	.94	1.3	.79	1.9	2.7	1.4	1.1	.95	.92	.60	.35	.35
12	.94	1.8	4.9	1.9	2.5	1.3	2.6	.91	.90	.60	.35	.35
13	.94	3.3	2.3	1.9	2.3	1.1	3.4	.89	.84	.60	.35	.35
14	.94	1.1	1.6	1.8	2.2	1.1	2.1	.94	.84	.60	.35	.34
15	.84	.84	1.3	1.8	2.1	1.0	1.7	.94	.84	.60	.35	.35
16	.84	.84	1.1	1.8	1.9	1.0	1.6	.91	.84	.60	.35	.35
17	.84	.84	1.0	1.6	1.9	1.0	1.5	.94	.84	.60	.35	.35
18	.84	.84	.94	1.6	1.7	1.0	1.4	.94	.84	.60	.34	.35
19	.84	.84	.86	1.5	1.6	.94	1.3	1.1	.84	.60	.35	.34
20	.84	.84	.84	1.5	1.6	.94	1.4	1.0	.83	.60	.34	.33
21	.84	.84	1.5	1.5	1.5	.97	1.4	.98	.79	.60	.33	.31
22	.84	.76	5.6	1.6	1.8	1.1	1.3	.98	.80	.60	.30	.35
23	.84	.84	3.7	2.1	1.6	1.0	1.3	.98	.83	.60	.30	.35
24	.84	.84	9.6	1.6	1.6	1.0	1.9	.94	.76	.60	.30	.35
25	.84	.84	13	3.7	1.5	.98	1.5	.94	.75	.53	.30	.35
26	.84	.84	9.5	3.3	1.5	.94	1.4	1.0	.73	.53	.30	.42
27	.84	.94	22	5.4	1.4	.94	1.3	1.0	.69	.53	.30	2.2
28	.84	1.9	7.1	4.2	1.5	.94	1.2	1.0	.68	.53	.30	.79
29	.84	1.5	4.9	3.2	1.7	.94	1.2	.96	.68	.47	.30	.65
30	.84	1.3	4.0	2.5	------	.94	1.2	.94	.66	.47	.28	.60
31	.84	------	3.5	2.3	------	.94	------	.94	------	.47	.28	------
TOTAL	28.30	31.54	110.53	73.0	80.1	35.17	41.88	30.98	24.91	18.28	11.38	13.27
MEAN	.91	1.05	3.57	2.35	2.76	1.13	1.40	1.00	.83	.59	.37	.44
MAX	1.3	3.3	22	5.4	13	1.5	3.4	1.2	1.0	.68	.53	2.2
MIN	.84	.76	.68	1.5	1.4	.94	.84	.89	.66	.47	.28	.30
AC-FT	56	63	219	145	159	70	83	61	49	36	23	26

CAL YR 1971 TOTAL 1,062.13 MEAN 2.91 MAX 22 MIN .68 AC-FT 2,110
WTR YR 1972 TOTAL 499.34 MEAN 1.36 MAX 22 MIN .28 AC-FT 990

PEAK DISCHARGE (BASE, 110 CFS).--No peak above base.

11161800 SAN VICENTE CREEK NEAR DAVENPORT, CALIF.

LOCATION.--Lat 37°03'19", long 122°10'52", on east boundary of San Vicente Grant, Santa Cruz County, on right bank 0.6 mile downstream from small right-bank tributary, 1.2 miles upstream from Mill Creek, and 3.1 miles north of Davenport.

DRAINAGE AREA.--6.07 sq mi.

PERIOD OF RECORD.--October 1969 to current year.

GAGE.--Water-stage recorder and concrete dam. Altitude of gage is 740 ft (from topographic map).

EXTREMES.--Current year: Maximum discharge, 38 cfs Dec. 27 (gage height, 3.60 ft); minimum daily, 0.39 cfs Aug. 24, 31, Sept. 1, 2, 7.
Period of record: Maximum discharge, 335 cfs Jan. 21, 1970 (gage height, 4.90 ft); minimum daily, 0.39 cfs Aug. 24, 31, Sept. 1, 2, 7, 1972.

REMARKS.--Records good. No regulation or diversion above station.

DISCHARGE, IN CUBIC FEET PER SECOND, WATER YEAR OCTOBER 1971 TO SEPTEMBER 1972

DAY	OCT	NOV	DEC	JAN	FEB	MAR	APR	MAY	JUN	JUL	AUG	SEP
1	1.3	.84	1.8	3.6	3.4	2.5	1.7	1.8	1.1	.92	.60	.39
2	1.3	.84	3.5	3.3	3.3	2.5	1.7	1.7	1.1	1.0	.60	.39
3	1.3	.76	2.3	3.1	3.1	2.4	1.7	1.7	1.1	1.0	.68	.45
4	1.2	.68	2.1	2.9	3.3	2.3	1.7	1.8	1.0	1.0	.68	.45
5	1.2	.68	1.7	2.7	19	2.3	2.7	1.8	1.0	1.0	.68	.45
6	1.2	.60	1.7	2.6	14	2.1	4.0	1.8	1.0	.92	.68	.45
7	1.1	.60	1.6	2.7	9.3	2.1	2.7	1.8	1.0	.92	.68	.39
8	1.1	.68	1.6	2.6	7.3	2.0	2.5	1.8	1.1	.92	.60	.45
9	1.0	.76	1.9	2.6	6.0	2.3	2.3	1.7	1.3	.92	.68	.45
10	.92	.76	1.9	2.5	5.4	2.4	2.1	1.6	1.3	.76	.68	.45
11	1.0	1.8	1.9	2.5	4.7	2.1	2.6	1.6	1.2	.76	.68	.45
12	1.0	1.8	6.6	2.5	4.2	2.0	5.9	1.5	1.1	.76	.68	.45
13	1.0	5.2	3.1	2.4	3.9	2.0	5.4	1.5	1.1	.68	.60	.45
14	1.0	2.0	2.5	2.4	3.7	2.0	3.7	1.5	1.1	.68	.60	.45
15	1.1	1.6	2.3	2.3	3.4	1.9	3.3	1.5	1.1	.76	.60	.45
16	1.3	1.5	1.9	2.3	3.3	1.8	3.0	1.5	1.0	.84	.60	.45
17	1.0	1.5	1.9	2.1	3.1	1.8	2.6	1.5	1.0	.92	.60	.45
18	1.0	1.5	1.8	2.1	3.0	1.8	2.5	1.5	1.0	.92	.60	.45
19	1.0	1.5	1.7	2.1	2.9	1.7	2.4	1.5	1.0	.92	.60	.52
20	1.0	1.5	1.7	2.1	2.7	1.7	2.4	1.5	1.0	1.2	.68	.52
21	1.0	1.5	3.1	2.1	2.7	1.7	2.4	1.5	1.0	1.3	.52	.52
22	1.0	1.5	6.7	2.1	2.9	2.0	2.3	1.5	1.1	1.1	.52	.52
23	1.0	1.5	4.2	2.9	2.7	1.9	2.1	1.4	1.1	1.0	.45	.52
24	1.0	1.6	13	2.4	2.6	1.8	3.3	1.4	1.1	.92	.39	.60
25	1.0	1.6	17	4.2	2.6	1.8	2.4	1.4	1.1	.84	.45	.60
26	.84	1.7	14	5.2	2.5	1.7	2.4	1.4	1.1	.76	.45	1.3
27	.84	1.9	24	6.9	2.5	1.7	2.1	1.4	1.0	.76	.45	4.1
28	.84	3.2	10	5.4	2.6	1.7	1.9	1.3	1.0	.68	.45	1.0
29	.84	2.3	6.2	4.5	3.0	1.7	1.9	1.3	.92	.68	.45	.84
30	.84	1.8	4.8	4.0	------	1.7	1.8	1.2	.92	.60	.45	.76
31	.92	------	4.2	3.7	------	1.7	------	1.2	------	.60	.39	------
TOTAL	32.14	45.70	152.7	94.8	133.1	61.1	79.5	47.6	31.94	27.04	17.77	19.72
MEAN	1.04	1.52	4.93	3.06	4.59	1.97	2.65	1.54	1.06	.87	.57	.66
MAX	1.3	5.2	24	6.9	19	2.5	5.9	1.8	1.3	1.3	.68	4.1
MIN	.84	.60	1.6	2.1	2.5	1.7	1.7	1.2	.92	.60	.39	.39
AC-FT	64	91	303	188	264	121	158	94	63	54	35	39

CAL YR 1971 TOTAL 1,540.88 MEAN 4.22 MAX 24 MIN .60 AC-FT 3,060
WTR YR 1972 TOTAL 743.11 MEAN 2.03 MAX 24 MIN .39 AC-FT 1,470

PEAK DISCHARGE (BASE, 100 CFS).--No peak above base.

11161900 SCOTT CREEK ABOVE LITTLE CREEK, NEAR DAVENPORT, CALIF.

LOCATION.--Lat 37°03'51", long 122°13'42", in Agua Puerco y las Trancas Grant, Santa Cruz County, on left bank 600 ft upstream from Little Creek, 2.0 miles upstream from mouth, and 4.2 miles north of Davenport.

DRAINAGE AREA.--25.1 sq mi.

PERIOD OF RECORD.--October 1958 to current year.

GAGE.--Water-stage recorder. Altitude of gage is 30 ft (from topographic map).

AVERAGE DISCHARGE.--14 years, 28.4 cfs (20,580 acre-ft per year); median of yearly mean discharges, 20 cfs (14,500 acre-ft per year).

EXTREMES.--Current year: Maximum discharge, 170 cfs Dec. 27 (gage height, 2.48 ft); no flow Aug. 23-25, Sept. 23-25.
Period of record: Maximum discharge, 1,970 cfs Feb. 13, 1962 (gage height, 9.36 ft), from rating curve extended above 650 cfs on basis of slope-area measurement at gage height 7.35 ft; no flow Aug. 23-25, Sept. 23-25, 1972.

REMARKS.--Records good except those above 600 cfs, which are fair. No regulation; small diversions above station for irrigation.

DISCHARGE, IN CUBIC FEET PER SECOND, WATER YEAR OCTOBER 1971 TO SEPTEMBER 1972

DAY	OCT	NOV	DEC	JAN	FEB	MAR	APR	MAY	JUN	JUL	AUG	SEP
1	1.7	.88	2.4	19	13	10	4.9	5.4	2.4	1.2	.32	.24
2	1.3	.93	5.0	16	12	9.4	4.9	5.1	2.3	1.3	.34	.21
3	1.2	.91	6.0	14	11	9.1	4.7	5.1	1.9	1.5	.48	.07
4	1.1	.85	5.0	12	11	8.7	4.7	5.1	1.9	1.6	.45	.21
5	.98	.84	4.0	12	54	8.4	6.0	5.4	1.8	1.4	.53	.31
6	.89	.84	3.5	11	61	8.1	10	5.4	1.7	1.5	.46	.34
7	.91	.79	3.0	10	43	7.8	7.1	5.4	1.7	1.2	.40	.23
8	.91	.82	2.8	9.4	34	7.8	5.8	5.4	1.9	1.0	.37	.27
9	.89	.93	3.3	9.1	29	7.5	5.4	4.9	2.4	.95	.44	.21
10	.82	.89	3.8	8.4	25	8.1	5.1	4.7	2.6	.85	.55	.22
11	.84	2.1	3.8	8.1	22	7.5	6.0	4.2	2.2	.88	.44	.25
12	.82	3.8	13	7.8	20	7.1	11	4.0	2.1	.91	.36	.25
13	.75	9.4	14	7.8	18	6.8	19	3.9	1.8	.83	.26	.39
14	.71	4.8	9.1	7.1	17	6.5	12	3.7	1.7	.69	.26	.33
15	.67	2.5	7.8	6.8	16	6.3	9.4	3.6	1.6	.48	.28	.32
16	1.1	1.9	6.8	6.8	15	6.0	8.7	3.4	1.5	.69	.28	.28
17	.88	1.7	6.0	6.5	14	6.0	8.1	3.4	1.6	.73	.32	.29
18	.91	1.4	5.8	6.5	14	5.8	7.8	3.6	1.7	.79	.39	.28
19	.93	1.1	5.4	6.3	13	5.8	7.1	3.7	1.7	.87	.38	.30
20	.94	1.2	5.4	6.3	12	5.6	6.8	3.9	1.6	1.2	.49	.27
21	.94	1.7	6.0	6.3	12	5.6	6.3	3.6	1.7	1.6	.34	.18
22	.88	1.7	30	6.5	13	6.0	6.3	3.6	1.8	1.4	.01	.01
23	.91	1.4	25	9.4	12	5.8	6.3	3.4	2.1	1.0	0	0
24	.91	1.4	36	7.8	11	5.6	9.1	3.4	2.2	.90	0	0
25	.90	1.4	84	9.4	11	5.4	7.5	3.2	1.8	.60	0	0
26	.91	1.2	48	12	11	5.4	6.5	3.1	1.9	.44	.03	.25
27	.91	1.7	125	22	11	5.1	6.0	3.1	1.8	.43	.19	6.2
28	.76	6.0	52	22	9.7	5.1	5.8	2.9	1.6	.37	.31	3.6
29	.65	4.8	35	18	12	5.1	5.6	2.6	1.5	.31	.33	2.0
30	.64	3.3	27	16	------	4.9	5.6	2.4	1.4	.31	.27	1.5
31	.81	------	22	14	------	4.9	------	2.4	------	.32	.23	------
TOTAL	28.47	63.18	605.9	334.3	556.7	207.2	219.5	123.0	55.9	28.25	9.51	19.01
MEAN	.92	2.11	19.5	10.8	19.2	6.68	7.32	3.97	1.86	.91	.31	.63
MAX	1.7	9.4	125	22	61	10	19	5.4	2.6	1.6	.55	6.2
MIN	.64	.79	2.4	6.3	9.7	4.9	4.7	2.4	1.4	.31	0	0
AC-FT	56	125	1,200	663	1,100	411	435	244	111	56	19	38

CAL YR 1971 TOTAL 5,596.18 MEAN 15.3 MAX 125 MIN .62 AC-FT 11,100
WTR YR 1972 TOTAL 2,250.92 MEAN 6.15 MAX 125 MIN 0 AC-FT 4,460

PEAK DISCHARGE (BASE, 300 CFS).--No peak above base.

11162500 PESCADERO CREEK NEAR PESCADERO, CALIF.

LOCATION.--Lat 37°15'39", long 122°19'40", in SW¼ sec.5, T.8 S., R.4 W., San Mateo County, on left bank at downstream side of highway bridge, 3.0 miles east of Pescadero, and 5.3 miles upstream from mouth.

DRAINAGE AREA.--45.9 sq mi.

PERIOD OF RECORD.--April 1951 to current year.

GAGE.--Water-stage recorder. Datum of gage is 62.3 ft above mean sea level.

AVERAGE DISCHARGE.--21 years, 40.3 cfs (29,200 acre-ft per year); median of yearly mean discharges, 23 cfs (16,700 acre-ft per year).

EXTREMES.--Current year: Maximum discharge, 205 cfs Dec. 27 (gage height, 3.59 ft); minimum daily, 0.24 cfs Sept. 8.
Period of record: Maximum discharge, 9,420 cfs Dec. 23, 1955 (gage height, 21.27 ft), from rating curve extended above 2,700 cfs on basis of slope-area measurement of maximum flow; no flow at times.

REMARKS.--Records good. Minor regulation from swimming pools in San Mateo County Memorial Park and Portola State Park during summer months. Small diversions above station by pumping. Records of water temperatures and suspended-sediment discharge for the current year are published in Part 2 of this report.

REVISIONS (WATER YEARS).--WSP 1445: 1952-53(M). WSP 1715: Drainage area.

DISCHARGE, IN CUBIC FEET PER SECOND, WATER YEAR OCTOBER 1971 TO SEPTEMBER 1972

DAY	OCT	NOV	DEC	JAN	FEB	MAR	APR	MAY	JUN	JUL	AUG	SEP
1	2.5	1.7	4.6	19	13	10	5.0	3.5	1.6	1.4	.61	.28
2	2.3	1.9	6.6	16	12	8.5	5.0	3.5	1.9	1.4	.65	.36
3	2.0	1.9	9.5	14	11	8.1	4.9	3.3	2.1	1.2	.70	.38
4	2.1	1.9	7.9	12	9.8	8.1	4.9	3.3	2.0	1.1	.63	.40
5	1.9	1.8	6.1	12	60	7.7	5.8	3.4	2.0	1.1	.63	.93
6	1.8	1.7	5.2	10	71	7.4	10	3.5	1.9	1.2	.62	.72
7	1.7	1.6	4.9	9.6	41	6.8	7.8	3.7	1.9	1.2	.64	.25
8	1.8	1.6	4.4	9.1	31	6.7	6.1	3.6	1.8	1.2	.63	.24
9	1.7	1.7	4.3	8.5	26	6.7	5.5	3.5	1.8	1.3	.46	.30
10	1.7	1.6	5.2	8.0	22	6.8	5.4	3.4	1.9	1.2	.46	.32
11	1.6	2.0	6.4	7.6	19	6.7	6.9	3.4	1.9	1.2	.44	.33
12	1.7	8.2	6.9	7.0	17	6.7	13	3.1	1.9	.99	.47	.31
13	1.7	7.2	12	7.0	16	6.7	19	3.0	1.7	.99	.43	.32
14	1.7	8.2	7.7	6.7	15	6.5	13	2.9	1.7	.98	.46	.42
15	1.6	3.5	5.9	6.4	14	6.4	10	2.8	1.6	.94	.46	.49
16	1.6	2.9	5.2	6.0	13	6.5	8.3	2.7	1.5	.88	.40	.60
17	1.6	2.6	4.7	5.8	12	6.2	7.0	2.8	1.5	.86	.44	.67
18	1.6	2.6	4.5	5.8	11	6.0	6.4	2.8	1.4	.61	.50	.67
19	1.6	2.5	4.2	5.7	11	5.8	5.8	3.0	2.0	.87	.73	.76
20	1.6	2.5	4.0	5.7	10	5.7	5.4	3.1	2.0	.90	1.1	.78
21	1.7	2.4	4.7	5.7	10	5.7	4.9	3.0	1.9	1.1	1.1	.86
22	1.7	2.4	53	5.8	11	5.8	4.8	2.9	1.9	1.2	.98	.89
23	1.7	2.5	35	7.0	11	7.4	4.6	2.9	1.9	1.3	1.2	1.1
24	1.8	2.5	37	7.4	9.7	6.1	5.5	2.8	1.9	1.1	1.2	1.1
25	1.7	2.6	123	7.2	9.3	5.8	5.8	2.9	1.9	.97	1.1	1.1
26	1.8	2.8	60	11	9.0	5.4	4.5	2.7	1.8	.91	1.0	1.5
27	1.8	3.0	137	28	8.6	5.4	4.2	2.7	1.7	.91	.69	2.0
28	1.8	7.2	63	29	8.4	5.3	3.9	2.6	1.6	.85	.38	2.4
29	1.7	9.2	35	20	9.6	5.2	3.8	2.4	1.6	.78	.49	2.0
30	1.6	6.1	26	17	------	5.1	3.6	2.4	1.4	.78	.27	1.5
31	1.6	------	21	14	------	5.0	------	1.8	------	.64	.26	------
TOTAL	54.7	100.3	714.9	334.0	521.4	202.2	200.8	93.4	53.7	32.06	20.13	23.98
MEAN	1.76	3.34	23.1	10.8	18.0	6.52	6.69	3.01	1.79	1.03	.65	.80
MAX	2.5	9.2	137	29	71	10	19	3.7	2.1	1.4	1.2	2.4
MIN	1.6	1.6	4.0	5.7	8.4	5.0	3.6	1.8	1.4	.61	.26	.24
AC-FT	109	199	1,420	662	1,030	401	398	185	107	64	40	48

CAL YR 1971 TOTAL 5,450.20 MEAN 14.9 MAX 137 MIN 1.6 AC-FT 10,810
WTR YR 1972 TOTAL 2,351.57 MEAN 6.43 MAX 137 MIN .24 AC-FT 4,660

PEAK DISCHARGE (BASE, 700 CFS).--No peak above base.

11162540 BUTANO CREEK NEAR PESCADERO, CALIF.

LOCATION.--Lat 37°14'01", long 122°21'56", in Butano Grant, San Mateo County, on right bank 0.2 mile downstream from small right-bank tributary, and 1.7 miles southeast of Pescadero.

DRAINAGE AREA.--18.3 sq mi.

PERIOD OF RECORD.--Occasional low-flow measurements, water years 1957, 1959-62, and annual maximum, water years 1959-62. June 1962 to current year.

GAGE.--Water-stage recorder. Altitude of gage is 70 ft (from topographic map). February 1957 to June 22, 1962, crest-stage gage at site 250 ft downstream at same datum.

AVERAGE DISCHARGE.--10 years, 19.3 cfs (13,980 acre-ft per year); median of yearly mean discharges, 18 cfs (13,000 acre-ft per year).

EXTREMES.--Current year: Maximum discharge, 95 cfs Dec. 27 (gage height, 6.15 ft); minimum daily, 0.04 cfs Sept. 8.
Period of record: Maximum discharge, 1,600 cfs Feb. 13, 1962 (gage height, 10.04 ft, crest-stage gage, from floodmarks), by slope-area measurement of maximum flow; no flow July 29 to Aug. 1, 1964.

REMARKS.--Records good. No regulation; small diversions above station for irrigation. Records of suspended-sediment discharge for the current year are published in Part 2 of this report.

DISCHARGE, IN CUBIC FEET PER SECOND, WATER YEAR OCTOBER 1971 TO SEPTEMBER 1972

DAY	OCT	NOV	DEC	JAN	FEB	MAR	APR	MAY	JUN	JUL	AUG	SEP
1	.96	1.4	2.1	11	7.1	5.3	2.4	2.0	.77	.40	.34	.06
2	.85	1.4	3.8	9.7	6.3	5.1	2.4	1.7	.77	.55	.32	.07
3	1.0	1.3	4.5	8.8	6.1	4.9	2.3	1.7	1.0	.40	.48	.08
4	.75	1.3	3.5	7.6	6.1	4.7	2.2	1.9	.98	.32	.35	.09
5	.73	1.3	2.7	7.1	36	4.7	3.5	2.1	.97	.32	.41	.07
6	.66	1.1	2.6	6.8	48	4.5	6.3	2.1	.60	.28	.33	.08
7	.85	1.1	2.4	6.6	30	4.4	4.2	2.2	.70	.32	.33	.07
8	.58	1.1	2.0	6.1	22	4.2	3.5	2.1	.90	.32	.26	.04
9	.70	1.2	2.1	5.8	18	4.2	3.2	1.7	.83	.36	.23	.08
10	.93	1.1	2.6	5.3	15	4.5	3.0	1.6	1.3	.32	.27	.07
11	.77	2.4	2.8	5.1	12	4.4	3.9	1.5	1.1	.18	.24	.09
12	.91	4.0	5.6	4.9	11	4.2	6.8	1.1	.65	.24	.23	.07
13	.66	6.6	6.2	4.9	10	4.0	12	1.4	.55	.28	.22	.10
14	.96	3.8	3.9	4.5	9.2	4.0	7.7	1.6	.45	.17	.22	.11
15	.73	2.3	3.5	4.5	8.4	3.8	5.8	1.5	.60	.36	.22	.09
16	.87	1.7	2.9	4.2	7.7	3.6	4.9	1.1	.65	.41	.20	.11
17	.75	1.6	2.6	4.2	7.4	3.6	4.4	1.2	.65	.36	.21	.13
18	.87	1.5	2.5	4.2	7.0	3.4	3.8	1.4	.76	.36	.20	.18
19	.96	1.4	2.4	4.0	6.6	3.4	3.3	1.5	.60	.55	.15	.16
20	.87	1.4	2.3	4.0	6.3	3.4	3.0	1.9	.60	.55	.19	.17
21	.84	1.5	3.1	3.8	6.2	3.3	2.8	1.5	.55	.55	.15	.20
22	.88	1.4	30	4.0	6.8	3.4	2.7	1.5	.60	.76	.13	.19
23	1.1	1.4	19	5.6	6.1	3.4	3.0	1.4	.76	.50	.15	.23
24	1.1	1.5	27	4.5	5.8	3.1	4.0	1.5	.76	.45	.19	.34
25	1.1	1.5	73	5.1	5.6	3.1	3.0	1.5	.83	.45	.12	.24
26	1.1	1.6	40	6.8	5.4	3.0	2.6	1.4	.55	.36	.11	.50
27	1.3	1.8	74	14	5.2	3.0	2.5	1.3	.45	.45	.16	3.4
28	1.2	5.1	41	13	5.1	2.8	2.2	1.1	.50	.39	.12	2.4
29	1.1	4.2	24	10	5.8	2.7	1.9	1.1	.50	.37	.09	1.3
30	1.1	2.7	17	8.8	------	2.7	2.2	.87	.40	.38	.05	.97
31	1.4	------	13	7.6	------	2.4	------	.75	------	.35	.07	------
TOTAL	28.58	61.7	424.1	202.5	332.2	117.2	115.5	47.22	21.33	12.06	6.74	11.69
MEAN	.92	2.06	13.7	6.53	11.5	3.78	3.85	1.52	.71	.39	.22	.39
MAX	1.4	6.6	74	14	48	5.3	12	2.2	1.3	.76	.48	3.4
MIN	.58	1.1	2.0	3.8	5.1	2.4	1.9	.75	.40	.17	.05	.04
AC-FT	57	122	841	402	659	232	229	94	42	24	13	23

CAL YR 1971 TOTAL 2,863.53 MEAN 7.85 MAX 93 MIN .43 AC-FT 5,680
WTR YR 1972 TOTAL 1,380.82 MEAN 3.77 MAX 74 MIN .04 AC-FT 2,740

PEAK DISCHARGE (BASE, 200 CFS).--No peak above base.

11162570 SAN GREGORIO CREEK AT SAN GREGORIO, CALIF.

LOCATION.--Lat 37°19'33", long 122°23'08", in San Gregorio Grant, San Mateo County, on right bank at downstream side of bridge on Old Coast Highway, 0.1 mile south of town of San Gregorio, and 1.4 miles upstream from mouth.

DRAINAGE AREA.--44.4 sq mi.

PERIOD OF RECORD.--October 1969 to current year.

GAGE.--Water-stage recorder. Datum of gage is 11.40 ft above mean sea level.

EXTREMES.--Current year: Maximum discharge, 366 cfs Feb. 5 (gage height, 6.30 ft); no flow for many days.
Period of record: Maximum discharge, 3,120 cfs Jan. 21, 1970 (gage height, 15.29 ft); no flow for many days in 1972.

REMARKS.--Records good. No regulation or diversion above station.

DISCHARGE, IN CUBIC FEET PER SECOND, WATER YEAR OCTOBER 1971 TO SEPTEMBER 1972

DAY	OCT	NOV	DEC	JAN	FEB	MAR	APR	MAY	JUN	JUL	AUG	SEP
1	1.9	1.1	3.4	23	11	12	4.7	3.5	.98	.20	.02	0
2	1.1	1.6	9.5	20	9.0	12	4.4	3.3	1.4	.22	.02	0
3	.82	1.5	11	17	8.0	12	4.4	3.3	.94	.15	.15	0
4	.79	1.3	8.0	14	8.5	12	4.6	2.9	1.1	.09	.05	0
5	.62	1.1	5.6	12	181	11	5.7	3.0	1.1	.18	.09	0
6	.53	1.2	4.4	11	165	10	9.7	3.6	.78	.09	.03	0
7	.59	.98	4.0	11	73	10	6.7	3.5	.83	.14	.02	0
8	.57	.98	3.1	11	47	9.6	5.5	3.7	1.3	.16	.04	.01
9	.74	1.0	3.4	10	36	9.5	4.8	3.3	1.7	.15	.02	.01
10	.62	1.2	7.6	9.9	29	9.5	4.7	3.1	2.3	.10	.01	0
11	.67	2.5	7.2	9.5	26	9.3	5.8	2.5	1.7	.18	0	0
12	.64	5.0	8.5	9.5	22	8.4	8.2	2.5	1.0	.41	0	0
13	.68	7.3	11	9.3	19	7.9	11	2.5	.88	.46	0	0
14	.62	6.2	6.4	8.9	19	7.6	7.7	2.5	.88	.27	0	0
15	.69	2.6	6.4	8.5	17	7.5	6.4	2.2	.88	.05	0	.01
16	.62	1.6	5.2	8.1	15	7.1	5.9	1.7	.88	.09	0	.01
17	.62	1.4	4.4	8.0	13	6.8	5.3	2.0	.88	.07	0	0
18	.68	1.4	4.0	8.0	12	6.7	5.5	2.6	.88	.07	0	0
19	.86	1.6	3.7	8.0	12	6.4	5.1	2.7	.88	.07	0	0
20	.88	1.4	3.4	8.0	11	6.4	4.5	3.0	.52	.07	0	0
21	.85	1.5	4.4	8.0	11	6.4	4.7	2.7	.35	.05	0	.01
22	.58	1.6	64	8.7	13	6.7	4.8	2.7	.44	.05	0	.01
23	.51	1.7	37	14	11	6.7	4.4	2.7	.63	.05	0	.01
24	.74	1.9	81	12	11	6.4	6.6	2.5	.79	.05	0	.01
25	.86	2.0	244	12	11	6.4	6.5	2.2	.72	.05	0	.01
26	.91	2.1	78	16	10	5.9	5.0	2.0	.37	.04	0	.03
27	.83	3.1	117	76	10	5.4	4.4	2.0	.34	.04	0	2.3
28	.64	17	59	38	10	5.0	4.2	1.7	.41	.04	0	3.8
29	.76	9.0	41	22	14	5.1	3.6	1.5	.30	.03	0	1.5
30	.90	4.8	31	15	------	4.8	3.4	1.4	.25	.03	0	.69
31	.81	------	26	13	------	4.8	------	1.2	------	.03	0	------
TOTAL	23.63	87.66	902.6	459.4	834.5	245.3	168.2	80.0	26.41	3.68	.45	8.41
MEAN	.76	2.92	29.1	14.8	28.8	7.91	5.61	2.58	.88	.12	.015	.28
MAX	1.9	17	244	76	181	12	11	3.7	2.3	.46	.15	3.8
MIN	.51	.98	3.1	8.0	8.0	4.8	3.4	1.2	.25	.03	0	0
AC-FT	47	174	1,790	911	1,660	487	334	159	52	7.3	.9	17

CAL YR 1971 TOTAL 5,810.96 MEAN 15.9 MAX 401 MIN .14 AC-FT 11,530
WTR YR 1972 TOTAL 2,840.24 MEAN 7.76 MAX 244 MIN 0 AC-FT 5,630

PEAK DISCHARGE (BASE, 500 CFS).--No peak above base.

11162630 PILARCITOS CREEK AT HALF MOON BAY, CALIF.

LOCATION.--Lat 37°28'07", long 122°26'08", on north boundary of Miramontes Grant, San Mateo County, on left bank 0.2 mile downstream from State Highway 1, 0.5 mile northwest of town of Half Moon Bay, and 1.0 mile upstream from mouth.

DRAINAGE AREA.--27.2 sq mi.

PERIOD OF RECORD.--July 1966 to current year.

GAGE.--Water-stage recorder. Datum of gage is 23.59 ft above mean sea level.

AVERAGE DISCHARGE.--6 years, 13.9 cfs (10,070 acre-ft per year).

EXTREMES.--Current year: Maximum discharge, 48 cfs Dec. 24 (gage height, 4.62 ft); no flow for many days. Period of record: Maximum discharge, 1,290 cfs Jan. 30, 1968 (gage height, 11.20 ft); no flow at times in most years.

REMARKS.--Records fair. Flow slightly regulated by storage in Pilarcitos Lake (capacity, 3,100 acre-ft, majority of water imported for domestic use). Small diversions for irrigation above station by pumping.

DISCHARGE, IN CUBIC FEET PER SECOND, WATER YEAR OCTOBER 1971 TO SEPTEMBER 1972

DAY	OCT	NOV	DEC	JAN	FEB	MAR	APR	MAY	JUN	JUL	AUG	SEP
1	0	.30	1.7	6.9	5.8	3.4	.87	.10				
2	.08	.32	6.0	6.3	5.1	3.2	.73	.07				
3	.23	.26	4.1	5.6	5.2	3.1	.79	.32				
4	.52	.18	3.1	4.3	6.0	3.1	.83	.06				
5	.46	.12	2.6	3.7	16	3.0	1.3	.07				
6	.40	.15	2.8	3.5	23	2.9	1.7	.28				
7	.41	.29	2.1	3.7	15	2.7	1.4	.25				
8	.43	.30	2.0	3.6	11	2.7	1.2	.41				
9	.32	.28	3.2	3.6	10	2.5	1.3	.36				
10	.39	.28	3.5	3.6	8.7	2.5	1.4	.32				
11	.44	1.0	2.7	3.5	7.1	2.5	4.7	.06				
12	.41	1.5	5.4	3.5	6.5	2.6	3.0	.04				
13	.55	5.8	3.5	3.4	6.2	2.6	2.5	.06				
14	.31	2.3	3.5	3.2	5.8	2.5	1.9	.04				
15	.27	1.4	3.1	3.0	5.4	2.4	1.7	.12				
16	.22	.96	2.8	3.0	5.4	2.3	1.6	.06				
17	.50	.99	2.7	3.0	5.2	2.2	1.6	.05				
18	1.5	.86	2.6	3.0	5.0	2.1	.94	.04				
19	1.1	.81	2.4	3.0	4.5	2.2	.62	.05				
20	.90	.97	2.4	3.1	3.9	2.1	.49	.02				
21	.71	.91	2.9	3.2	4.0	2.1	.57	.02				
22	.52	.87	9.7	4.4	4.4	2.1	.28	.02				
23	.25	.91	6.5	7.7	3.8	1.8	.57	.02				
24	.20	.93	21	5.7	3.8	1.8	1.3	.01				
25	.15	.99	25	6.4	3.7	2.1	.88	0				
26	.15	1.1	17	6.4	3.5	1.9	.68	0				
27	.35	1.9	16	9.0	3.4	1.8	.33	0				
28	.20	9.9	12	7.3	3.7	1.7	.41	0				
29	.14	6.0	10	6.6	3.8	1.3	.28	0				
30	.23	2.4	8.7	6.2	------	.84	.28	0				
31	.28	------	7.9	6.1	------	.71	------	0	------			------
TOTAL	12.62	44.98	198.9	145.5	194.9	70.75	36.15	2.85	0	0	0	0
MEAN	.41	1.50	6.42	4.69	6.72	2.28	1.21	.092	0	0	0	0
MAX	1.5	9.9	25	9.0	23	3.4	4.7	.41	0	0	0	0
MIN	0	.12	1.7	3.0	3.4	.71	.28	0	0	0	0	0
AC-FT	25	89	395	289	387	140	72	5.7	0	0	0	0

CAL YR 1971 TOTAL 2,811.78 MEAN 7.70 MAX 151 MIN 0 AC-FT 5,580
WTR YR 1972 TOTAL 706.65 MEAN 1.93 MAX 25 MIN 0 AC-FT 1,400

PEAK DISCHARGE (BASE, 200 CFS).--No peak above base.

11162720 COLMA CREEK AT SOUTH SAN FRANCISCO, CALIF.

LOCATION.--Lat 37°39'14", long 122°25'31", in Buri Buri Grant, San Mateo County, on left bank in Orange Memorial Park, 1.0 mile southwest of South San Francisco Post Office.

DRAINAGE AREA.--10.8 sq mi.

PERIOD OF RECORD.--October 1963 to current year.

GAGE.--Water-stage recorder. Datum of gage is 12.53 ft above mean sea level. Recording rain gages at Coast Guard Radio Station 2.9 miles southwest and on San Bruno Mt. 2.9 miles northwest. Altitude of both sites is 930 ft (from topographic map).

AVERAGE DISCHARGE.--9 years, 6.46 cfs (4,680 acre-ft per year).

EXTREMES.--Current year: Maximum discharge, 837 cfs Dec. 2 (gage height, 7.22 ft); minimum daily, 0.43 cfs Jan. 9, 10, July 8.
Period of record: Maximum discharge, 1,980 cfs Nov. 27, 1970 (gage height, 10.17 ft); no flow Oct. 5, 26, 1963.

REMARKS.--Records good except those below 5.0 cfs, which are poor. Low flow affected by return flow from urban irrigation. Records of water temperatures and suspended-sediment discharge for the current year are published in Part 2 of this report.

DISCHARGE, IN CUBIC FEET PER SECOND, WATER YEAR OCTOBER 1971 TO SEPTEMBER 1972

DAY	OCT	NOV	DEC	JAN	FEB	MAR	APR	MAY	JUN	JUL	AUG	SEP
1	2.0	1.6	1.6	.60	1.6	1.2	.80	1.2	1.2	1.2	1.5	2.7
2	1.6	1.6	56	.60	1.6	5.9	.80	1.2	1.2	1.2	2.1	2.7
3	1.6	1.6	23	.60	9.1	5.9	1.2	1.2	.80	1.2	1.2	2.7
4	1.6	1.6	1.6	.60	41	2.1	.60	1.2	1.2	1.2	1.7	2.7
5	1.6	1.2	1.6	.60	116	1.2	7.4	1.2	1.6	1.2	2.0	2.3
6	1.6	.80	5.3	.60	17	2.1	4.5	1.2	1.2	.80	2.0	2.2
7	1.6	.80	1.6	.60	6.7	1.6	1.2	1.2	1.2	.60	2.1	2.2
8	1.6	.80	1.6	.60	4.4	1.6	1.2	1.6	1.2	.43	1.8	2.1
9	1.5	.80	20	.43	3.8	1.6	1.2	1.6	5.2	.80	1.8	2.1
10	1.4	.80	14	.43	3.2	1.6	1.2	1.2	1.2	1.4	1.8	2.1
11	1.2	14	2.1	.60	2.7	1.2	23	1.2	1.2	1.5	1.8	2.1
12	1.2	18	43	.60	2.7	1.2	22	1.2	1.2	1.4	1.7	2.6
13	1.4	45	1.6	.60	2.1	1.6	1.6	1.2	1.2	1.4	1.9	2.1
14	1.5	1.2	5.9	.60	2.1	1.6	1.2	.67	.80	1.4	2.0	2.5
15	1.6	.80	2.1	.60	2.1	1.2	1.2	1.5	.80	1.1	2.2	1.8
16	1.6	.80	1.6	1.2	2.1	1.2	1.6	1.6	1.6	1.4	2.2	1.7
17	1.6	1.2	1.6	2.1	2.1	1.2	1.6	1.6	1.2	1.4	2.2	1.6
18	1.6	1.2	1.6	.60	2.1	1.2	1.6	1.2	.80	1.2	1.6	1.6
19	1.6	1.2	1.2	.80	2.1	1.2	1.6	1.2	.80	4.4	3.1	1.8
20	1.8	1.2	1.2	1.6	2.7	1.2	1.6	.80	.80	1.5	2.7	2.1
21	2.0	1.2	15	4.5	6.8	1.6	1.6	.80	1.2	1.5	2.7	2.0
22	2.1	.80	47	11	16	6.6	1.6	1.2	.80	1.5	2.7	2.0
23	2.0	.80	3.6	15	3.7	2.7	1.6	1.2	.80	1.5	2.7	1.9
24	2.0	.80	87	3.2	4.0	4.3	13	1.2	.80	1.5	2.7	1.8
25	1.8	.80	65	30	1.2	3.0	1.6	1.2	.80	1.5	2.7	6.0
26	1.6	3.0	28	10	1.2	2.0	1.6	1.2	1.2	1.5	2.7	38
27	1.6	1.3	16	27	1.2	2.0	1.2	.60	1.2	1.5	2.7	9.5
28	1.6	45	.60	2.1	6.1	2.0	1.2	.60	1.2	1.5	2.7	.78
29	1.6	3.8	4.2	1.6	3.3	2.0	1.2	.80	1.6	1.5	2.9	.81
30	1.6	2.1	.60	1.6	------	2.0	1.2	1.2	1.6	1.5	3.0	.76
31	1.6	------	.60	1.6	------	1.2	------	.80	------	1.5	2.7	------
TOTAL	50.7	155.80	455.80	122.56	270.7	67.0	102.90	35.77	37.60	43.23	69.6	107.25
MEAN	1.64	5.19	14.7	3.95	9.33	2.16	3.43	1.15	1.25	1.39	2.25	3.58
MAX	2.1	45	87	30	116	6.6	23	1.6	5.2	4.4	3.1	38
MIN	1.2	.80	.60	.43	1.2	1.2	.60	.60	.80	.43	1.2	.76
AC-FT	101	309	904	243	537	133	204	71	75	86	138	213
(a)	.04	.69	2.71	.58	1.30	.12	.38	0	.09	.04	.05	.23
(b)	.15	1.38	4.92	1.01	1.95	.22	1.26	.10	.18	.12	.14	.55

CAL YR 1971 TOTAL 1,784.60 MEAN 4.89 MAX 109 MIN .60 AC-FT 3,540
WTR YR 1972 TOTAL 1,518.91 MEAN 4.15 MAX 116 MIN .43 AC-FT 3,010

PEAK DISCHARGE (BASE, 600 CFS).--Dec. 2 (0615) 837 cfs (7.22 ft).

a Precipitation, in inches, at San Bruno Mt. gage.
b Precipitation, in inches, at Coast Guard Radio Station gage.
NOTE.--No gage-height record Oct. 1 to Nov. 4.

11162800 REDWOOD CREEK AT REDWOOD CITY, CALIF.

LOCATION.--Lat 37°26'58", long 122°13'57", in Pulgas Grant, San Mateo County, at Menlo Country Club, on right bank 200 ft upstream from Alameda de las Pulgas bridge, and 2.5 miles south of Redwood City Old Post Office.

DRAINAGE AREA.--1.82 sq mi.

PERIOD OF RECORD.--September 1959 to current year.

GAGE.--Water-stage recorder. Datum of gage is 83.92 ft above mean sea level.

AVERAGE DISCHARGE.--13 years, 0.97 cfs (703 acre-ft per year); median of yearly mean discharges, 0.8 cfs (580 acre-ft per year).

EXTREMES.--Current year: Maximum discharge, 49 cfs Jan. 27 (gage height, 2.98 ft); minimum daily, 0.01 cfs on many days.
Period of record: Maximum discharge, 644 cfs Jan. 31, 1963 (gage height, 9.36 ft), from rating curve extended above 180 cfs on basis of slope-area measurement of maximum flow and computation of maximum flow through culvert; maximum gage height, 11.55 ft Nov. 29, 1970 (backwater from culvert trash racks); no flow at times.

REMARKS.--Records good. Low flow at times affected by return flow from urban irrigation.

REVISIONS.--WSP 1929: Drainage area.

DISCHARGE, IN CUBIC FEET PER SECOND, WATER YEAR OCTOBER 1971 TO SEPTEMBER 1972

DAY	OCT	NOV	DEC	JAN	FEB	MAR	APR	MAY	JUN	JUL	AUG	SEP
1	.01	.01	.01	.15	.29	.20	.14	.10	.06	.05	.04	.04
2	.01	.01	.45	.10	.31	.20	.15	.10	.06	.05	.05	.04
3	.01	.01	.12	.10	.32	.22	.14	.08	.05	.05	.04	.04
4	.01	.01	.05	.06	.47	.21	.12	.09	.05	.04	.04	.04
5	.01	.01	.03	.06	2.6	.22	.78	.08	.05	.04	.04	.04
6	.01	.01	.04	.04	.76	.20	.40	.09	.05	.05	.04	.04
7	.01	.02	.04	.06	.44	.19	.15	.09	.05	.06	.05	.04
8	.01	.01	.04	.06	.35	.19	.21	.12	.05	.04	.05	.04
9	.01	.01	.04	.05	.34	.22	.14	.09	.05	.04	.04	.04
10	.01	.01	.06	.05	.27	.22	.14	.09	.04	.04	.05	.05
11	.01	.04	.04	.05	.23	.22	.62	.08	.04	.04	.05	.05
12	.01	.04	.08	.05	.22	.23	1.2	.09	.04	.04	.04	.05
13	.01	.17	.08	.06	.21	.22	.26	.07	.06	.04	.04	.05
14	.01	.02	.04	.06	.22	.21	.14	.07	.03	.04	.05	.05
15	.01	.01	.04	.05	.24	.21	.15	.10	.04	.04	.05	.04
16	.01	.02	.03	.05	.28	.23	.14	.08	.04	.04	.05	.05
17	.01	.02	.03	.05	.22	.19	.14	.08	.04	.05	.04	.05
18	.01	.02	.04	.05	.23	.19	.12	.09	.08	.04	.04	.05
19	.01	.02	.03	.05	.19	.19	.13	.10	.04	.05	.06	.06
20	.01	.02	.03	.04	.20	.17	.15	.07	.04	.04	.04	.06
21	.01	.02	.10	.05	.45	.15	.15	.08	.03	.04	.05	.05
22	.01	.03	2.4	.05	.84	.29	.15	.08	.04	.04	.05	.06
23	.01	.03	.90	.17	.24	.14	.15	.08	.04	.04	.05	.05
24	.01	.03	1.7	.05	.30	.16	.20	.08	.05	.05	.04	.05
25	.01	.03	2.5	.88	.24	.14	.15	.08	.04	.04	.04	.05
26	.01	.03	1.6	.63	.22	.13	.15	.08	.04	.04	.04	.07
27	.01	.03	2.6	5.6	.22	.17	.10	.07	.04	.04	.04	.07
28	.01	.12	.50	.50	.24	.13	.10	.08	.05	.04	.04	.04
29	.01	.15	.44	.37	.53	.15	.10	.08	.04	.04	.04	.04
30	.01	.02	.30	.31	------	.14	.10	.08	.04	.04	.04	.04
31	.02	------	.20	.30	------	.13	------	.06	------	.05	.04	------
TOTAL	.32	.98	14.56	10.15	11.67	5.86	6.77	2.61	1.37	1.34	1.37	1.44
MEAN	.010	.033	.47	.33	.40	.19	.23	.084	.046	.043	.044	.048
MAX	.02	.17	2.6	5.6	2.6	.29	1.2	.12	.08	.06	.06	.07
MIN	.01	.01	.01	.04	.19	.13	.10	.06	.03	.04	.04	.04
AC-FT	.6	1.9	29	20	23	12	13	5.2	2.7	2.7	2.7	2.9

CAL YR 1971	TOTAL	137.33	MEAN	.38	MAX	14	MIN	.01	AC-FT 272
WTR YR 1972	TOTAL	58.44	MEAN	.16	MAX	5.6	MIN	.01	AC-FT 116

PEAK DISCHARGE (BASE, 70 CFS).--No peak above base.

11164500 SAN FRANCISQUITO CREEK AT STANFORD UNIVERSITY, CALIF.

LOCATION.--Lat 37°25'24", long 122°11'18", in San Francisquito Grant, Santa Clara County, at golf course, on right bank 1.1 miles downstream from Los Trancos Creek, and 1.1 miles west of Stanford University Post Office.

DRAINAGE AREA.--37.4 sq mi.

PERIOD OF RECORD.--October 1930 to September 1941, October 1950 to current year. Monthly discharge only for some periods, published in WSP 1315-B.

GAGE.--Water-stage recorder and concrete control. Datum of gage is 115.75 ft above mean sea level.

AVERAGE DISCHARGE.--33 years, 17.7 cfs (12,820 acre-ft per year).

EXTREMES.--Current year: Maximum discharge, 700 cfs Dec. 25 (gage height, unknown); minimum daily, 0.01 cfs Oct. 25.
Period of record: Maximum discharge, 5,560 cfs Dec. 22, 1955 (gage height, 13.60 ft); no flow at times.

REMARKS.--Records good except those for period of no gage-height record, which are poor. Flow regulated by Searsville Lake 5 miles upstream (capacity, 952 acre-ft). Diversions of about 800 acre-ft each year above station to Los Trancos and Lagunita Canals for irrigation on Stanford University campus below station. Low flow affected by waste water from Stanford Linear Accelerator.

DISCHARGE, IN CUBIC FEET PER SECOND, WATER YEAR OCTOBER 1971 TO SEPTEMBER 1972

DAY	OCT	NOV	DEC	JAN	FEB	MAR	APR	MAY	JUN	JUL	AUG	SEP
1	.24	.28	.26	.13	.29	.11	.10	.04	.14	.19	.23	.05
2	.26	.19	2.6	.14	.15	.51	.10	.04	.15	.42	.13	.09
3	.20	.25	.11	.15	.12	.53	.10	.05	.06	.39	.12	.10
4	.22	.30	.31	.19	.16	.50	.07	.06	.05	.29	.07	.08
5	.15	.22	.29	.16	60	.23	1.4	.06	.05	.34	.12	.06
6	.11	.43	.30	.18	40	.16	8.4	.07	.06	.21	.13	.06
7	.17	.42	.34	.21	20	.14	.31	.10	.07	.26	.09	.14
8	.14	.53	.36	.24	7.0	.14	.06	.12	.09	.15	.07	.13
9	.10	.56	.36	.30	.35	.17	.04	.04	.13	.08	.05	.15
10	.11	1.1	.47	.30	.19	.16	.04	.05	.17	.28	.12	.11
11	.18	.91	.51	.33	.18	.15	.12	.04	.19	.74	.14	.31
12	.30	.78	2.6	.37	.18	.22	.14	.05	.17	.86	.08	.18
13	.29	2.6	.74	.36	.18	.14	.43	.05	.15	.66	.26	.10
14	.36	.58	.09	.43	.17	.14	.06	.05	.13	.55	.11	.17
15	.23	.40	.11	.43	.22	.12	.04	.04	.13	.57	.15	.33
16	.44	.77	.18	.43	.20	.11	.04	.04	.14	.71	.10	.41
17	.54	1.0	.24	.43	.18	.10	.04	.06	.17	.65	.16	.20
18	.58	1.2	.24	.46	.18	.08	.04	.07	.16	.42	.24	.15
19	.21	.95	.24	.51	.22	.11	.08	.05	.19	.61	.13	.17
20	.16	.27	.24	.52	.25	.11	.09	.05	.19	.64	.19	.30
21	.26	.36	.90	.31	.27	.11	.12	.06	.10	.14	.20	.31
22	.32	.48	8.0	.34	.36	.14	.14	.06	.11	.08	.14	.57
23	.29	.48	2.7	.46	.38	.29	.06	.12	.11	.05	.09	.15
24	.19	.42	20	.41	2.4	4.1	.13	.13	.27	.19	.06	.25
25	.01	.71	120	.40	.26	.32	.18	.13	.11	.11	.11	.26
26	.04	.73	3.1	.65	.14	.10	.09	.12	.09	.11	.10	.50
27	.05	.62	4.1	80	.14	.10	.05	.11	.07	.08	.20	1.4
28	.07	1.1	1.6	11	.14	.10	.05	.11	.12	.06	.12	.50
29	.12	.71	.16	4.1	.14	.10	.04	.13	.16	.06	.07	.40
30	.13	.32	.11	1.6	------	.10	.04	.17	.14	.30	.09	.37
31	.21	------	.11	1.4	------	.10	------	.10	------	.32	.06	------
TOTAL	6.68	19.67	171.37	106.94	134.45	9.49	12.60	2.37	3.87	10.52	3.93	8.00
MEAN	.22	.66	5.53	3.45	4.64	.31	.42	.077	.13	.34	.13	.27
MAX	.58	2.6	120	80	60	4.1	8.4	.17	.27	.86	.26	1.4
MIN	.01	.19	.09	.13	.12	.08	.04	.04	.05	.05	.05	.05
AC-FT	13	39	340	212	267	19	25	4.7	7.7	21	7.8	16

CAL YR 1971 TOTAL 2,337.10 MEAN 6.40 MAX 224 MIN .01 AC-FT 4,640
WTR YR 1972 TOTAL 489.89 MEAN 1.34 MAX 120 MIN .01 AC-FT 972

PEAK DISCHARGE (BASE, 700 CFS).--No peak above base.

NOTE.--No gage-height record Dec. 24, 25.

11166000 MATADERO CREEK AT PALO ALTO, CALIF.

LOCATION.--Lat 37°25'18", long 122°08'04", in Rincon de San Francisquito Grant, Santa Clara County, on right bank on Ash Street 150 ft upstream from Lambert Avenue Bridge, and 2.1 miles southeast of Palo Alto Post Office.

DRAINAGE AREA.--7.24 sq mi.

PERIOD OF RECORD.--July 1952 to current year.

GAGE.--Water-stage recorder. Datum of gage is 22.07 ft above mean sea level. Prior to Sept. 25, 1958, at site 150 ft downstream at different datum.

AVERAGE DISCHARGE.--20 years, 1.60 cfs (1,160 acre-ft per year); median of yearly mean discharges, 0.9 cfs (650 acre-ft per year).

EXTREMES.--Current year: Maximum discharge, 170 cfs Dec. 21 (gage height, 2.04 ft); minimum daily, 0.05 cfs Apr. 25.

Period of record: Maximum discharge, 854 cfs Dec. 22, 1955 (gage height, 9.60 ft), from rating curve extended above 390 cfs on basis of slope-area measurement of maximum flow; maximum gage height, 9.88 ft Dec. 23, 1955, site and datum then in use (backwater from culvert); no flow at times.

REMARKS.--Records good except those above 200 cfs, which are fair. No regulation or diversion above station.

DISCHARGE, IN CUBIC FEET PER SECOND, WATER YEAR OCTOBER 1971 TO SEPTEMBER 1972

DAY	OCT	NOV	DEC	JAN	FEB	MAR	APR	MAY	JUN	JUL	AUG	SEP
1	.31	.25	.20	.10	.13	.13	.13	.30	.12	.19	.37	.17
2	.21	.23	13	.10	.14	.13	.15	.29	.15	.14	.44	.18
3	.23	.27	.44	.11	.19	.14	.18	.24	.12	.13	.41	.14
4	.27	.23	.19	.13	1.7	.14	.21	.08	.10	.11	.46	.15
5	.27	.27	.17	.12	6.6	.21	.47	.12	.10	.14	.44	.18
6	.26	.26	.20	.12	.33	.14	.22	.08	.15	.17	.39	.16
7	.22	.24	.19	.12	.15	.15	.16	.08	.16	.15	.43	.18
8	.28	.21	.19	.17	.14	.15	.19	.09	.14	.15	.44	.20
9	.22	.22	.19	.23	.16	.14	.15	.11	.29	.12	.45	.19
10	.20	.23	.75	.13	.13	.15	.15	.11	.11	.12	.50	.15
11	.20	.43	.20	.11	.13	.15	1.5	.13	.09	.12	.48	.20
12	.21	.33	3.2	.12	.14	.13	1.1	.19	.11	.16	.49	.32
13	.20	4.1	.30	.12	.12	.14	.66	.11	.14	.17	.48	.43
14	.21	.21	.18	.13	.14	.16	.35	.11	.14	.19	.48	.43
15	.30	.20	.20	.11	.16	.14	.16	.10	.13	.17	.49	.48
16	.21	.20	.19	.11	.22	.16	.16	.10	.14	.13	.47	.32
17	.19	.22	.21	.13	.13	.19	.15	.13	.14	.15	.48	.18
18	.23	.21	.35	.15	.12	.15	.22	.17	.14	.24	.49	.17
19	.28	.24	.35	.15	.11	.15	.30	.42	.13	.15	.52	.17
20	.25	.36	.40	.14	.12	.22	.19	.29	.14	.15	.50	.15
21	.22	.25	18	.13	.19	.20	.13	.13	.18	.17	.46	.16
22	.30	.24	20	.13	.74	.41	.12	.15	.15	.17	.50	.25
23	.22	.23	2.1	.82	.19	.15	.10	.13	.15	.12	.32	.16
24	.23	.24	18	.14	.13	.20	.38	.12	.43	.15	.17	.15
25	.25	.17	24	1.5	.14	.17	.05	.14	.46	.22	.18	.14
26	.20	.19	5.2	3.2	.17	.14	.15	.16	.50	.20	.16	1.0
27	.15	.21	9.0	18	.13	.16	.27	.16	.35	.32	.13	1.7
28	.15	.92	.77	.69	.20	.18	.31	.12	.20	.29	.12	.15
29	.15	1.4	1.5	.16	.20	.17	.27	.11	.17	.24	.16	.15
30	.20	.20	.17	.12	------	.17	.27	.12	.23	.21	.16	.12
31	.20	------	.11	.14	------	.16	------	.13	------	.30	.16	------
TOTAL	7.02	12.96	119.95	27.63	13.15	5.18	8.85	4.72	5.56	5.44	11.73	8.53
MEAN	.23	.43	3.87	.89	.45	.17	.30	.15	.19	.18	.38	.28
MAX	.31	4.1	24	18	6.6	.41	1.5	.42	.50	.32	.52	1.7
MIN	.15	.17	.11	.10	.11	.13	.05	.08	.09	.11	.12	.12
AC-FT	14	26	238	55	26	10	18	9.4	11	11	23	17

CAL YR 1971 TOTAL 309.21 MEAN .85 MAX 25 MIN .04 AC-FT 613
WTR YR 1972 TOTAL 230.72 MEAN .63 MAX 24 MIN .05 AC-FT 458

PEAK DISCHARGE (BASE, 200 CFS).--No peak above base.

11166480 STEVENS CREEK RESERVOIR NEAR MONTE VISTA, CALIF.

LOCATION.--Lat 37°17'55", long 122°04'34", in NW¼ sec.27, T.7 S., R.2 W., Santa Clara County, at center of dam on Stevens Creek, 2.0 miles southwest of Monte Vista.

DRAINAGE AREA.--17.3 sq mi.

PERIOD OF RECORD.--December 1935 to current year. Monthly contents prior to October 1959 published in WSP 1735.

GAGE.--Nonrecording gage read once daily. Datum of gage is at mean sea level (levels by Santa Clara County Flood Control and Water District).

EXTREMES (at 0800).--Current year: Maximum contents observed, 1,260 acre-ft Mar. 22 (elevation, 501.18 ft); no contents Oct. 22 to Dec. 22.

Period of record: Maximum contents observed, 4,100 acre-ft Dec. 26, 1955 (elevation, 538.61 ft); maximum elevation, 539.70 ft Mar. 16, 1967; no contents at times in most years.

REMARKS.--Reservoir is formed by earthfill dam completed in 1936. Capacity, 3,600 acre-ft (revised) between elevations 444.9 (invert of outlet tunnel) and 534.8 ft (crest of spillway). Water released down Stevens Creek for irrigation and ground-water recharge by percolation.

COOPERATION.--Record of contents furnished by Santa Clara County Flood Control and Water District.

REVISIONS (WATER YEARS).--WRD Calif. 1970: 1969.

MONTHEND CONTENTS, IN ACRE-FEET (INCLUDING MOMENTARY STORAGE ABOVE SPILLWAY CREST), WATER YEAR OCTOBER 1971 TO SEPTEMBER 1972

Date	Contents
Sept. 30, 1971	469
Oct. 31	0
Nov. 30	0
Dec. 31	610
Jan. 31, 1972	865
Feb. 29	1,190
Mar. 31	1,200
Apr. 30	1,080
May 31	860
June 30	620
July 31	400
Aug. 31	293
Sept. 30	230

NOTE.--Contents at 0800 on first day of following month.

RESERVOIRS IN GUADALUPE RIVER BASIN, CALIF.

11166670 ALMADEN RESERVOIR.--Lat 37°09'54", long 121°49'39", in San Vicente Grant, Santa Clara County, at center of dam on Alamitos Creek, 0.7 mile southwest of New Almaden, and 7 miles south of Edenvale. Drainage area, 11.9 sq mi. Period of record, January 1936 to current year. Monthly contents prior to October 1959, published in WSP 1735. Nonrecording gage read once daily. Datum of gage is at mean sea level (levels by Santa Clara County Flood Control and Water District). Extremes for current year: Maximum contents observed, 806 acre-ft Jan. 26 (elevation, 585.86 ft); no contents Oct. 1 to Nov. 13. Extremes for period of record: Maximum contents observed, 2,150 acre-ft Jan. 31, 1963 (elevation, 610.24 ft, from floodmarks); no contents at times in each year except 1942, 1943, 1962-63, 1966, 1968-70.

Reservoir is formed by earthfill dam completed in 1936. Capacity, 1,780 acre-ft (revised) between elevations 533.1 (invert of outlet tunnel) and 606.9 ft (crest of spillway). Water released down Alamitos Creek for ground-water recharge by percolation and minor irrigation. Up to 100 cfs diverted to Calero Reservoir at times. Record of contents furnished by Santa Clara County Flood Control and Water District.

11166740 CALERO RESERVOIR.--Lat 37°11'00", long 121°47'28", in San Vicente Grant, Santa Clara County, at center of dam on Arroyo Calero, 1.7 miles northeast of New Almaden, and 6 miles southeast of Edenvale. Drainage area, 6.96 sq mi. Period of record, January 1936 to current year. Monthly contents prior to October 1959, published in WSP 1735. Nonrecording gage read once daily. Datum of gage is at mean sea level (levels by Santa Clara County Flood Control and Water District). Extremes for current year: Maximum contents observed, 5,440 acre-ft Oct. 1 (elevation, 466.65 ft); minimum observed, 1,200 acre-ft Sept. 30 (elevation, 436.34 ft). Extremes for period of record: Maximum contents observed, 10,520 acre-ft Apr. 7, 1967 (elevation, 485.21 ft); no contents at times in each year except 1942-45, 1963-72.

Reservoir is formed by earthfill dam completed to crest elevation 482.55 ft in 1936 and raised to 483.5 ft ft in 1962. Capacity, 10,160 acre-ft (revised) between elevations 393.7 (center of outlet tunnel) and 483.5 ft (crest of spillway). Water released down Arroyo Calero for ground-water recharge by percolation and minor irrigation. Up to 100 cfs diverted from Almaden Reservoir to Calero Reservoir at times. Record of contents furnished by Santa Clara County Flood Control and Water District.

11167370 GUADALUPE RESERVOIR.--Lat 37°11'57", long 121°52'42", in Los Capitancillos Grant, Santa Clara County, at center of dam on Guadalupe Creek, 3.6 miles northwest of New Almaden, and 5.0 miles southeast of Los Gatos. Drainage area, 5.97 sq mi. Period of record, January 1936 to current year. Monthly contents prior to October 1959, published in WSP 1735. Nonrecording gage read once daily. Datum of gage is at mean sea level (levels by Santa Clara County Flood Control and Water District). Extremes for current year: Maximum contents observed, 360 acre-ft Feb. 23 (elevation, 547.50 ft); no contents Oct. 1 to Jan. 26, Mar. 22 to Sept. 30. Extremes for period of record: Maximum contents observed, 3,610 acre-ft Feb. 1, 1963 (elevation, 619.26 ft, from floodmarks); no contents at times in each year except 1941-43, 1962-63, 1966-67.

Reservoir is formed by earthfill dam completed in 1936. Capacity, 3,740 acre-ft (revised) between elevations 506.8 (invert of outlet tunnel) and 617.3 ft (crest of spillway). Water released down Guadalupe Creek for irrigation and ground-water recharge by percolation. Record of contents furnished by Santa Clara County Flood Control and Water District.

11167950 LAKE ELSMAN.--Lat 37°07'51", long 121°55'47", in SE¼ sec.23, T.9 S., R.1 W., Santa Clara County, at center of Austrian Dam on Los Gatos Creek, and 7.3 miles southeast of Los Gatos. Drainage area, 9.79 sq mi. Period of record, February 1951 to current year. Monthly contents prior to October 1959, published in WSP 1735. Nonrecording gage read once daily. Datum of gage is at mean sea level (levels by San Jose Water Works). Extremes for current year: Maximum contents observed, 1,790 acre-ft Apr. 28 (elevation, 1,051.9 ft); minimum observed, 147 acre-ft Nov. 10 (elevation, 1,000.2 ft). Extremes for period of record: Maximum contents observed, 6,640 acre-ft Jan. 31, 1963 (elevation, 1,115.1 ft); no contents Nov. 30, 1968, Nov. 5, 1969.

Reservoir is formed by earthfill dam completed in 1951; topped by a 2-foot inflatable surcharge dam since 1956. Usable capacity, 6,280 acre-ft between elevations 944 (elevation of outlet gates) and 1,112 ft (top of 2-foot inflatable surcharge dam). Dead storage, 60 acre-ft. Water released down Los Gatos Creek for domestic and industrial use. Record of contents furnished by San Jose Water Works.

11167980 LEXINGTON RESERVOIR.--Lat 37°12'06", long 121°59'17", in SE¼ sec.29, T.8 S., R.1 W., Santa Clara County, at center of dam on Los Gatos Creek, and 1.7 miles south of Los Gatos. Drainage area, 37.0 sq mi. Period of record, December 1952 to current year. Monthly contents prior to October 1959, published in WSP 1735. Nonrecording gage read once daily. Datum of gage is at mean sea level (levels by Santa Clara County Flood Control and Water District). Extremes for current year: Maximum contents observed, 5,100 acre-ft Oct. 1 (elevation, 593.75 ft); minimum observed, 488 acre-ft Nov. 8 (elevation, 543.00 ft). Extremes for period of record: Maximum contents observed, 23,190 acre-ft Mar. 16, 1967 (elevation, 654.00 ft); no contents at times in each year except 1963, 1966-72.

Reservoir is formed by earthfill dam completed in 1952. Capacity, 20,210 acre-ft (revised) between elevations 519 (invert at outlet tunnel) and 649.9 ft (crest of spillway). Dead storage, 31 acre-ft. Water released down Los Gatos Creek for irrigation and ground-water recharge by percolation. Record of contents furnished by Santa Clara County Flood Control and Water District.

MONTHEND CONTENTS, IN ACRE-FEET (INCLUDING MOMENTARY STORAGE ABOVE SPILLWAY CREST), WATER YEAR OCTOBER 1971 TO SEPTEMBER 1972

Date	Almaden Reservoir a	Calero Reservoir a	Guadalupe Reservoir a	Lake Elsman b	Lexington Reservoir a
Sept. 30, 1971	0	5,440	0	942	5,100
Oct. 31	0	3,940	0	200	1,200
Nov. 30	107	3,140	0	166	765
Dec. 31	655	2,540	0	574	1,850
Jan. 31, 1972	300	3,000	183	948	1,850
Feb. 29	340	3,040	291	1,450	2,500
Mar. 31	350	2,960	0	1,650	2,530
Apr. 30	427	2,780	0	1,790	2,530
May 31	412	2,460	0	1,630	2,200
June 30	335	2,040	0	1,410	2,070
July 31	278	1,880	0	1,010	1,970
Aug. 31	155	1,550	0	687	1,880
Sept. 30	158	1,200	0	301	1,790

a Contents at 0800 on first day of following month.
b Contents at 0800 on last day of month.

11166900 ALAMITOS CREEK NEAR NEW ALMADEN, CALIF.

LOCATION.--Lat 37°13'21", long 121°51'00", in Pueblo Lands of San Jose Grant, Santa Clara County, on left bank at Greystone bridge, 1.1 miles downstream from Arroyo Calero, 3.4 miles southwest of Edenvale, and 3.5 miles northwest of New Almaden.

DRAINAGE AREA.--31.8 sq mi.

PERIOD OF RECORD.--April 1958 to September 1972 (discontinued).

GAGE.--Water-stage recorder. Altitude of gage is 247 ft (from topographic map). Prior to July 15, 1958, nonrecording gage at same site and datum.

AVERAGE DISCHARGE.--14 years, 17.5 cfs (12,680 acre-ft per year).

EXTREMES.--Current year: Maximum discharge, 57 cfs Dec. 27 (gage height, 1.96 ft); no flow Sept. 9-20.
Period of record: Maximum discharge, 4,300 cfs Apr. 2, 1958 (gage height, 9.67 ft), from rating curve extended above 720 cfs on basis of slope-area measurement at gage height 7.98 ft; no flow at times in most years.

REMARKS.--Records good. Flow regulated by Calero 5.2 miles upstream (see sta 11166740) and Almaden 5.3 miles upstream (see sta 11166670) Reservoirs; water released during summer. Small diversions above station.

DISCHARGE, IN CUBIC FEET PER SECOND, WATER YEAR OCTOBER 1971 TO SEPTEMBER 1972

DAY	OCT	NOV	DEC	JAN	FEB	MAR	APR	MAY	JUN	JUL	AUG	SEP
1	18	20	6.3	6.9	3.4	9.7	1.4	.50	1.5	4.5	1.5	1.0
2	18	20	15	6.3	3.2	9.7	1.3	.47	1.5	4.5	2.2	1.0
3	18	20	13	6.3	3.2	9.7	1.2	1.2	1.4	4.5	2.6	1.0
4	18	20	13	6.0	3.2	11	1.1	2.1	1.3	4.5	2.9	1.0
5	18	20	13	6.0	3.8	12	1.4	2.3	1.2	4.2	2.7	.70
6	18	20	13	6.9	3.4	12	1.4	2.4	1.0	4.0	2.7	.36
7	18	20	13	15	3.2	12	1.3	2.4	1.0	4.0	2.7	.22
8	18	20	13	15	3.2	10	1.2	2.6	1.1	3.5	2.7	.03
9	18	20	13	16	3.4	9.2	1.1	2.7	1.6	2.5	2.7	0
10	19	19	15	16	10	6.5	1.0	2.9	1.8	1.9	2.4	0
11	19	20	16	16	23	3.7	1.5	2.7	1.7	1.6	1.1	0
12	19	20	16	16	26	3.2	1.2	2.7	1.7	1.0	.43	0
13	19	21	16	14	26	2.9	1.1	3.0	2.3	.65	.36	0
14	19	20	16	13	26	2.7	.95	3.2	2.3	1.2	.26	0
15	19	18	16	13	18	2.6	.95	3.2	2.4	.95	.29	0
16	19	5.8	16	13	17	2.6	.88	1.9	2.7	1.2	.65	0
17	19	4.8	16	13	15	2.2	.80	1.2	3.0	1.4	2.4	0
18	19	4.5	16	13	12	1.9	.80	1.2	3.0	1.1	4.0	0
19	19	4.3	16	10	12	1.7	.73	1.0	3.2	1.2	2.4	0
20	19	4.0	16	4.8	12	1.6	.95	1.3	3.5	1.1	1.7	0
21	19	4.0	18	4.0	12	1.6	4.5	1.3	4.0	.88	1.5	.21
22	19	4.0	10	3.8	11	1.6	1.3	1.3	4.3	.95	1.2	1.2
23	19	4.0	6.3	3.5	11	1.6	1.3	1.0	4.5	.95	.88	2.1
24	19	4.0	6.3	3.4	11	1.5	2.6	.95	4.8	.73	1.2	2.6
25	19	3.8	9.3	4.0	11	1.5	2.4	.95	4.8	.88	1.2	2.9
26	19	3.8	15	5.2	10	1.4	2.4	1.5	4.8	.73	1.0	3.0
27	19	3.8	31	23	10	1.4	1.9	1.6	4.6	.50	.95	3.8
28	20	3.8	12	6.3	10	1.4	1.6	1.4	4.6	.47	1.0	3.4
29	20	4.3	9.3	4.0	9.7	1.4	1.1	1.6	4.5	.43	1.0	5.8
30	20	4.3	7.9	3.5	------	1.4	1.2	1.6	4.5	.40	1.0	7.2
31	20	------	6.3	3.4	------	1.4	------	1.6	------	.80	1.0	------
TOTAL	584	361.2	418.7	290.3	322.7	143.1	42.56	55.77	84.6	57.22	50.62	37.52
MEAN	18.8	12.0	13.5	9.36	11.1	4.62	1.42	1.80	2.82	1.85	1.63	1.25
MAX	20	21	31	23	26	12	4.5	3.2	4.8	4.5	4.0	7.2
MIN	18	3.8	6.3	3.4	3.2	1.4	.73	.47	1.0	.40	.26	0
AC-FT	1,160	716	830	576	640	284	84	111	168	114	100	74

CAL YR 1971 TOTAL 4,773.97 MEAN 13.1 MAX 31 MIN .97 AC-FT 9,470
WTR YR 1972 TOTAL 2,448.29 MEAN 6.69 MAX 31 MIN 0 AC-FT 4,860

11169000 GUADALUPE RIVER AT SAN JOSE, CALIF.

LOCATION.--Lat 37°20'04", long 121°53'54", Santa Clara County, on right bank at San Jose, 100 ft downstream from Los Gatos Creek.

DRAINAGE AREA.--144 sq mi.

PERIOD OF RECORD.--October 1929 to current year. Monthly discharge only for some periods, published in WSP 1315-B. Prior to 1945, published as Guadalupe Creek at San Jose.

GAGE.--Water-stage recorder and concrete control. Datum of gage is 72.00 ft above mean sea level (levels by Corps of Engineers).

EXTREMES.--Current year: Maximum discharge, 1,490 cfs Dec. 21 (gage height, 4.18 ft); minimum daily, 0.06 cfs Apr. 2, 9.
Period of record: Maximum discharge, 9,150 cfs Apr. 2, 1958 (gage height, 16.55 ft); no flow many days in most years.

REMARKS.--Records good. Flow regulated by Lexington Reservoir 12 miles upstream and Calero, Almaden, Guadalupe Reservoirs, and Lake Elsman given elsewhere in this report, with water released during summer for percolation in spreading basins on tributaries. During current year, 4,180 acre-ft was diverted by San Jose Water Works for urban use and 10,990 acre-ft was diverted into Alamitos percolation ponds from Coyote Creek basin.

REVISIONS (WATER YEARS).--WSP 1315-B: 1943(M), 1945(M), 1949(M).

DISCHARGE, IN CUBIC FEET PER SECOND, WATER YEAR OCTOBER 1971 TO SEPTEMBER 1972

DAY	OCT	NOV	DEC	JAN	FEB	MAR	APR	MAY	JUN	JUL	AUG	SEP
1	3.1	2.4	1.2	12	5.4	1.3	.09	.35	.13	.50	.23	.31
2	3.3	2.4	108	9.3	2.3	.61	.06	.34	.19	.39	.24	.26
3	3.3	2.2	11	8.3	2.0	.47	.07	.34	.33	.37	.25	.20
4	2.1	2.0	4.0	6.9	3.2	.41	.08	.38	.27	.34	.24	.12
5	.30	1.9	2.2	5.9	37	.24	.66	.36	.32	.30	.33	.20
6	.78	1.6	2.2	3.5	3.0	.40	1.5	.27	.41	.38	.26	.34
7	4.0	1.7	6.4	6.9	.96	1.1	.36	.28	.42	.42	.33	.30
8	3.3	2.2	18	8.4	.65	1.5	.10	.33	.36	.34	.19	.24
9	3.3	1.9	6.0	5.2	.89	1.2	.06	.38	1.9	.21	.22	.21
10	3.3	1.6	8.0	3.3	.73	.70	.16	.37	4.4	.36	.17	.19
11	3.8	5.7	5.7	2.2	.55	1.1	3.1	.36	1.1	.52	.17	.16
12	3.8	18	6.7	5.2	.56	.35	3.4	.36	.38	.30	.10	.19
13	3.4	33	5.8	5.4	.52	.44	4.4	.32	.43	.30	.07	.64
14	3.4	7.5	5.1	5.7	.76	.30	.88	.24	.36	.52	.08	1.6
15	2.7	3.7	8.2	3.3	4.6	.33	.30	.30	.41	.40	.11	1.6
16	1.5	2.7	6.8	2.8	4.3	.35	.32	.40	.70	.22	.10	1.7
17	1.4	1.4	5.8	2.8	4.1	.42	.34	.34	.40	.30	.13	1.7
18	1.9	.52	6.0	2.6	3.8	.67	.43	.30	.28	.52	.12	1.8
19	1.9	.77	5.8	2.6	2.9	1.3	.33	.30	3.1	.52	.16	1.9
20	1.9	.77	6.2	2.4	2.6	.35	.38	.30	3.0	.40	.14	1.9
21	1.7	.68	173	1.9	2.2	.27	.43	.25	2.3	.40	.18	1.9
22	2.1	.82	266	1.3	3.7	1.7	.34	.22	1.7	.40	.27	2.0
23	1.9	1.0	75	1.8	2.8	1.3	.28	.22	.62	.30	.29	1.7
24	1.7	.70	141	1.0	1.9	.36	4.9	.22	2.0	.40	.20	1.6
25	1.7	.49	327	32	1.7	.17	1.8	.22	2.3	.52	.14	1.9
26	2.1	.52	163	106	1.4	.18	.55	.20	2.0	.78	.15	2.1
27	2.5	.64	299	271	1.3	.12	.40	.15	2.5	.52	.11	44
28	2.7	3.2	56	61	1.7	.15	.40	.15	1.3	.40	.17	6.3
29	2.6	5.3	42	47	2.5	.14	.39	.15	.61	.40	.22	5.6
30	2.5	3.1	21	38	------	.13	.32	.15	.50	.30	.28	3.8
31	2.5	------	17	12	------	.08	------	.15	------	.40	.32	------
TOTAL	76.48	110.41	1,809.1	677.7	100.02	18.14	26.83	8.70	34.72	12.43	5.97	86.46
MEAN	2.47	3.68	58.4	21.9	3.45	.59	.89	.28	1.16	.40	.19	2.88
MAX	4.0	33	327	271	37	1.7	4.9	.40	4.4	.78	.33	44
MIN	.30	.49	1.2	1.0	.52	.08	.06	.15	.13	.21	.07	.12
AC-FT	152	219	3,590	1,340	198	36	53	17	69	25	12	171

CAL YR 1971 TOTAL 3,854.14 MEAN 10.6 MAX 327 MIN .05 AC-FT 7,640
WTR YR 1972 TOTAL 2,966.96 MEAN 8.11 MAX 327 MIN .06 AC-FT 5,880

11169500 SARATOGA CREEK AT SARATOGA, CALIF.

LOCATION.--Lat 37°15'16", long 122°02'18", in Quito Grant, Santa Clara County, on right bank on upstream side of private road bridge, 0.5 mile southwest of Saratoga, and 0.7 mile downstream from diversion dam.

DRAINAGE AREA.--9.22 sq mi.

PERIOD OF RECORD.--October 1933 to current year. Prior to October 1951, published as Campbell Creek at Saratoga.

GAGE.--Water-stage recorder and concrete control. Altitude of gage is 500 ft (from topographic map). Prior to Dec. 6, 1968, at site 40 ft downstream at different datum.

AVERAGE DISCHARGE (adjusted for diversion).--39 years, 9.71 cfs (7,030 acre-ft per year).

EXTREMES.--Current year: Maximum discharge, 127 cfs Dec. 27 (gage height, 3.91 ft); minimum daily, 0.03 cfs July 5, Aug. 14.
Period of record: Maximum discharge, 2,730 cfs Dec. 22, 1955 (gage height, 6.40 ft, site and datum then in use), from rating curve extended above 510 cfs on basis of slope-area measurement of maximum flow; no flow at times.

REMARKS.--Records good. Water is diverted for municipal use by San Jose Water Works at diversion dam above station.

REVISIONS (WATER YEARS).--WSP 1445: 1940, 1952(M). WSP 1929: Drainage area.

DISCHARGE, IN CUBIC FEET PER SECOND, WATER YEAR OCTOBER 1971 TO SEPTEMBER 1972

DAY	OCT	NOV	DEC	JAN	FEB	MAR	APR	MAY	JUN	JUL	AUG	SEP
1	.72	.70	.79	3.0	.35	.40	.25	.14	.08	.04	.10	.06
2	.68	.68	4.2	2.5	.26	.40	.25	.10	.08	.04	.10	.06
3	.64	.72	2.6	1.5	.29	.40	.25	.12	.10	.04	.09	.09
4	.65	.67	2.0	.30	.36	.40	.25	.08	.10	.04	.08	.17
5	.56	.58	1.5	.30	13	.35	.44	.12	.07	.03	.09	.25
6	.57	.61	1.3	.21	6.0	.35	.46	.12	.04	.04	.08	.16
7	.59	.60	1.2	.21	2.6	.35	.15	.14	.04	.05	.06	.16
8	.59	.67	1.0	.21	.46	.35	.16	.14	.07	.04	.07	.17
9	.67	.67	1.2	.21	.30	.35	.16	.08	.23	.04	.06	.17
10	.72	.77	1.6	.23	.34	.35	.15	.08	.25	.06	.04	.16
11	.71	2.3	1.3	.23	.35	.35	.32	.09	.11	.11	.04	.16
12	.65	1.5	2.5	.29	.28	.35	.92	.08	.10	.23	.04	.21
13	.53	2.5	2.2	.30	.27	.35	.75	.04	.19	.17	.04	.23
14	.61	1.3	1.5	.26	.27	.35	.17	.06	.30	.12	.03	.24
15	.62	1.0	1.5	.22	.26	.30	.16	.07	.33	.13	.05	.26
16	.69	.92	1.5	.20	.26	.30	.17	.08	.20	.16	.05	.23
17	.74	.87	1.4	.18	.32	.30	.20	.11	.10	.16	.17	.24
18	.68	.87	1.3	.20	.28	.30	.16	.08	.08	.15	.10	.27
19	.64	.82	1.3	.27	.28	.30	.20	.12	.09	.26	.09	.29
20	.59	.82	1.3	.29	.25	.30	.17	.13	.07	.16	.10	.31
21	.65	.87	4.5	.26	.26	.30	.15	.13	.07	.16	.09	.26
22	.66	.87	23	.29	.30	.30	.19	.16	.08	.28	.09	.21
23	.69	.78	9.9	.36	.20	.30	.20	.10	.11	.31	.08	.22
24	.68	.82	33	.19	.21	.30	.23	.14	.12	.33	.09	.20
25	.65	.92	45	2.4	.23	.25	.11	.16	.07	.31	.08	.23
26	.63	.92	24	1.9	.24	.25	.12	.16	.07	.13	.10	.29
27	.61	.92	49	17	.24	.25	.11	.11	.09	.09	.10	.59
28	.64	1.5	17	2.0	.21	.25	.13	.14	.06	.08	.11	.46
29	.64	1.4	8.0	.33	.40	.25	.14	.10	.04	.06	.11	.36
30	.59	1.1	5.0	.24	------	.25	.16	.11	.04	.07	.10	.34
31	.68	------	4.0	.18	------	.25	------	.09	------	.06	.08	------
TOTAL	19.97	29.67	255.59	36.26	29.07	9.85	7.28	3.38	3.38	3.95	2.51	7.05
MEAN	.64	.99	8.24	1.17	1.00	.32	.24	.11	.11	.13	.081	.24
MAX	.74	2.5	49	17	13	.40	.92	.16	.33	.33	.17	.59
MIN	.53	.58	.79	.18	.20	.25	.11	.04	.04	.03	.03	.06
AC-FT	40	59	507	72	58	20	14	6.7	6.7	7.8	5.0	14
(a)	0	0	0	139	181	107	88	57	44	9.8	0	0

CAL YR 1971 TOTAL 1,224.22 MEAN 3.35 MAX 49 MIN .04 AC-FT 2,430
WTR YR 1972 TOTAL 407.96 MEAN 1.11 MAX 49 MIN .03 AC-FT 809

PEAK DISCHARGE (BASE, 110 CFS).--Dec. 27 (0215) 127 cfs (3.91 ft).

a Diversion, in acre-feet, furnished by San Jose Water Works.
NOTE.--No gage-height record Feb. 29 to Apr. 4.

11169800 COYOTE CREEK NEAR GILROY, CALIF.

LOCATION.--Lat 37°04'40", long 121°29'36", in NE¼SE¼ sec.11, T.10 S., R.4 E., Santa Clara County, on left bank 0.7 mile downstream from Bear Creek, 5.0 miles upstream from Coyote Creek Dam, and 6.4 miles northeast of Gilroy.

DRAINAGE AREA.--109 sq mi.

PERIOD OF RECORD.--October 1960 to current year.

GAGE.--Water-stage recorder. Altitude of gage is 790 ft (from topographic map). Prior to Nov. 14, 1963, at site 0.4 mile downstream at different datum.

AVERAGE DISCHARGE.--12 years, 43.3 cfs (31,370 acre-ft per year); median of yearly mean discharges, 33 cfs (23,900 acre-ft per year).

EXTREMES.--Current year: Maximum discharge, 445 cfs Dec. 25 (gage height, 5.05 ft); no flow for many days.
Period of record: Maximum discharge, 10,100 cfs Jan. 31, 1963 (gage height, 12.60 ft, site and datum then in use), from rating curve extended above 3,200 cfs on basis of slope-area measurement of maximum flow; no flow at times in each year.

REMARKS.--Records good. No regulation or diversion above station. Records of water temperatures and suspended-sediment discharge for the current year are published in Part 2 of this report.

DISCHARGE, IN CUBIC FEET PER SECOND, WATER YEAR OCTOBER 1971 TO SEPTEMBER 1972

DAY	OCT	NOV	DEC	JAN	FEB	MAR	APR	MAY	JUN	JUL	AUG	SEP
1			0	13	18	4.2	1.4	1.5	.23	.13		
2			0	10	15	3.9	1.3	1.6	.21	.12		
3			0	8.5	12	3.9	1.4	1.4	.24	.11		
4			0	6.5	12	3.7	1.2	1.4	.22	.12		
5			0	5.6	90	3.6	1.3	1.2	.20	.12		
6			0	5.1	115	3.5	1.3	1.1	.21	.11		
7			0	4.7	51	3.3	1.5	1.1	.19	.09		
8			0	4.3	32	3.3	1.4	1.1	.18	.11		
9			0	3.9	23	3.2	1.3	1.0	.22	.11		
10			0	3.6	18	3.1	1.2	1.0	.18	.09		
11			0	3.4	14	3.1	1.2	1.0	.16	.08		
12			0	3.3	11	3.1	1.3	.99	.17	.06		
13			0	3.3	10	3.1	1.7	.86	.16	.06		
14			0	3.1	8.7	2.9	1.9	.83	.14	.06		
15			0	2.9	7.8	2.9	1.7	.81	.16	.05		
16			0	2.9	7.0	2.7	1.5	.78	.15	.05		
17			0	2.7	6.4	2.4	1.3	.75	.13	.06		
18			0	2.7	6.1	2.4	1.1	.67	.16	.06		
19			0	2.5	5.6	2.2	1.1	.68	.14	.05		
20			0	2.5	5.2	2.0	1.0	.68	.13	.06		
21			0	2.5	5.0	1.9	1.1	.69	.13	.05		
22			1.1	2.5	5.4	1.9	1.1	.61	.14	.05		
23			31	2.5	5.2	1.9	1.1	.64	.14	.04		
24			17	2.6	4.8	1.8	1.2	.64	.13	.03		
25			207	3.1	4.5	1.7	1.2	.61	.17	.03		
26			96	4.3	4.3	1.7	1.2	.48	.16	.02		
27			209	39	4.1	1.5	1.2	.46	.13	.02		
28			93	60	4.1	1.4	1.4	.44	.15	.01		
29			43	40	4.1	1.5	1.4	.40	.12	.01		
30			26	28	------	1.4	1.5	.24	.11	0		
31		------	18	22	------	1.5	------	.25	------	0		------
TOTAL	0	0	741.1	301.0	509.3	80.7	39.5	25.91	4.96	1.96	0	0
MEAN	0	0	23.9	9.71	17.6	2.60	1.32	.84	.17	.063	0	0
MAX	0	0	209	60	115	4.2	1.9	1.6	.24	.13	0	0
MIN	0	0	0	2.5	4.1	1.4	1.0	.24	.11	0	0	0
AC-FT	0	0	1,470	597	1,010	160	78	51	9.8	3.9	0	0

CAL YR 1971 TOTAL 5,807.13 MEAN 15.9 MAX 610 MIN 0 AC-FT 11,520
WTR YR 1972 TOTAL 1,704.43 MEAN 4.66 MAX 209 MIN 0 AC-FT 3,380

PEAK DISCHARGE (BASE, 1,000 CFS).--No peak above base.

RESERVOIRS IN COYOTE CREEK BASIN, CALIF.

11169850 COYOTE LAKE.--Lat 37°07'06", long 121°32'55", in SE¼ sec.29, T.9 S., R.4 E., Santa Clara County, at center of dam on Coyote Creek, 3.8 miles northeast of San Martin. Drainage area, 120 sq mi. Period of record, February 1936 to current year. Monthly contents prior to October 1959, published in WSP 1735. Nonrecording gage read once daily. Datum of gage is at mean sea level (levels by Santa Clara County Flood Control and Water District). Extremes for current year: Maximum contents observed, 5,310 acre-ft Oct. 1 (elevation, 738.19 ft); minimum observed, 3,300 acre-ft Sept. 30 (elevation, 731.03 ft). Extremes for period of record: Maximum contents observed, 28,120 acre-ft Dec. 8, 1950 (elevation, 782.5 ft); no contents at times.

Reservoir is formed by rock- and earthfill dam completed in 1936. Capacity, 23,700 acre-ft (revised) between elevations 693.3 (invert of outlet tunnel) and 777.2 ft (crest of spillway). Water released down Coyote Creek for storage in Anderson Lake. Record of contents furnished by Santa Clara County Flood Control and Water District.

11169920 ANDERSON LAKE.--Lat 37°09'56", long 121°37'42", in southeast corner of La Laguna Seca Grant, Santa Clara County, at center of dam on Coyote Creek, 2.5 miles northeast of Madrone. Drainage area, 195 sq mi. Period of record, December 1950 to current year. Monthly contents prior to October 1959, published in WSP 1735. Nonrecording gage read once daily. Datum of gage is at mean sea level (levels by Santa Clara Flood Control and Water District). Extremes for current year: Maximum contents observed, 61,470 acre-ft Oct. 1 (elevation, 597.51 ft); minimum observed, 21,800 acre-ft Sept. 30 (elevation, 540.69 ft). Extremes for period of record: Maximum contents, 95,990 acre-ft Apr. 3, 1958 (elevation, 628.67 ft, from floodmarks); no contents at times in 1960-62.

Reservoir is formed by earth- and rockfill dam completed in 1950. Capacity, 91,280 acre-ft (revised) between elevations 439 (invert of outlet tunnel) and 625.0 ft (crest of spillway). Water released down Coyote Creek for irrigation and ground-water recharge by percolation. Record of contents furnished by Santa Clara County Flood Control and Water District.

MONTHEND CONTENTS, IN ACRE-FEET (INCLUDING MOMENTARY STORAGE ABOVE SPILLWAY CREST), WATER YEAR OCTOBER 1971 TO SEPTEMBER 1972

Date	Coyote Lake	Anderson Lake
Sept. 30, 1971.....	5,310	61,470
Oct. 31.....	4,420	57,650
Nov. 30.....	3,790	56,310
Dec. 31.....	4,400	56,400
Jan. 31, 1972.....	4,600	55,830
Feb. 29.....	5,020	55,900
Mar. 31.....	4,800	54,500
Apr. 30.....	4,650	48,870
May 31.....	4,530	43,000
June 30.....	4,200	37,200
July 31.....	3,900	31,930
Aug. 31.....	3,640	26,510
Sept. 30.....	3,300	21,800

NOTE.--Contents at 0800 on first day of following month.

11170000 COYOTE CREEK NEAR MADRONE, CALIF.

LOCATION.--Lat 37°10'06", long 121°38'55", near southeast corner of La Laguna Seca Grant, Santa Clara County, on right bank 1.2 miles downstream from Anderson Dam, and 1.8 miles northeast of Madrone.

DRAINAGE AREA.--196 sq mi.

PERIOD OF RECORD.--October 1902 to September 1912, December 1916 to current year. Records for water years 1917-19 incomplete, yearly estimates published in WSP 1315-B. Published as Coyote River near Madrone 1902-12, 1916-26.

GAGE.--Water-stage recorder and concrete control. Altitude of gage is 375 ft (from topographic map). Prior to Mar. 1, 1950, nonrecording gage and water-stage recorders at various sites within 1.4 miles upstream at different datums.

AVERAGE DISCHARGE.--66 years, 65.5 cfs (47,460 acre-ft per year).

EXTREMES.--Current year: Maximum discharge, 99 cfs Apr. 12-17 (gage height, 2.53 ft); minimum daily, 9.1 cfs Dec. 8, Feb. 13.
Period of record: Maximum discharge, 25,000 cfs probably Mar. 7, 1911 (record furnished by Duryea, Haehl and Gilman); no flow at times.

REMARKS.--Records good. Flow regulated by Coyote (see sta 11169880) and Anderson (see sta 11169920) Lakes; water released during summer. Water is diverted to Main Avenue percolation ponds by Santa Clara County Flood Control and Water District.

REVISIONS (WATER YEARS).--WSP 1345: 1932, 1935(M).

DISCHARGE, IN CUBIC FEET PER SECOND, WATER YEAR OCTOBER 1971 TO SEPTEMBER 1972

DAY	OCT	NOV	DEC	JAN	FEB	MAR	APR	MAY	JUN	JUL	AUG	SEP
1	76	39	20	11	9.9	9.9	50	81	82	77	83	77
2	74	34	19	11	10	9.9	51	82	83	76	83	77
3	72	34	21	11	10	9.9	72	83	83	77	85	80
4	73	34	21	11	10	9.9	86	83	83	77	85	80
5	73	34	21	11	11	9.9	86	84	83	77	84	77
6	73	34	19	15	11	9.9	86	85	82	77	85	77
7	70	34	13	25	11	9.9	86	85	81	77	85	77
8	67	34	9.1	24	11	9.9	86	85	83	77	85	77
9	67	33	9.9	23	10	9.9	86	84	83	76	84	80
10	68	32	11	34	9.6	9.9	86	80	83	77	85	80
11	65	28	11	40	9.5	9.9	84	81	82	75	79	77
12	63	27	11	41	9.3	9.9	90	84	81	80	72	77
13	62	27	11	41	9.1	9.9	98	84	80	83	72	70
14	63	27	11	41	9.2	10	97	84	80	83	72	65
15	63	25	11	40	9.2	13	96	83	81	84	72	65
16	63	23	11	40	9.2	12	97	83	81	84	72	65
17	64	23	11	40	9.5	12	90	86	81	83	72	65
18	65	23	11	27	9.5	12	84	86	82	83	75	65
19	59	23	11	9.9	9.7	12	80	86	81	83	79	67
20	57	22	11	10	9.7	12	76	86	82	83	79	67
21	56	22	11	9.9	9.9	13	77	87	81	83	80	65
22	52	22	11	9.9	9.9	14	77	87	82	84	79	65
23	53	22	11	9.9	9.9	34	77	85	83	84	79	65
24	53	22	11	9.9	9.9	70	77	85	83	84	77	65
25	53	21	11	10	9.9	86	75	85	83	83	78	65
26	51	21	11	10	9.9	86	79	86	79	82	78	65
27	47	21	11	11	9.9	86	84	85	71	83	79	65
28	48	21	11	11	9.9	85	84	85	75	83	78	65
29	45	22	11	11	9.9	75	82	83	76	83	77	65
30	43	22	11	10	------	50	81	83	76	84	77	65
31	44	------	11	11	------	48	------	83	------	84	76	------
TOTAL	1,882	806	395.0	619.5	286.5	858.7	2,460	2,609	2,426	2,506	2,446	2,115
MEAN	60.7	26.9	12.7	20.0	9.88	27.7	82.0	84.2	80.9	80.8	78.9	70.5
MAX	76	39	21	41	11	86	98	87	83	84	85	80
MIN	43	21	9.1	9.9	9.1	9.9	50	80	71	75	72	65
AC-FT	3,730	1,600	783	1,230	568	1,700	4,880	5,170	4,810	4,970	4,850	4,200
(a)	337	97	0	0	0	117	420	458	419	362	663	624

CAL YR 1971 TOTAL 14,604.5 MEAN 40.0 MAX 86 MIN 6.8 AC-FT 28,970 a 2,430
WTR YR 1972 TOTAL 19,409.7 MEAN 53.0 MAX 98 MIN 9.1 AC-FT 38,500 a 3,500

a Diversion, in acre-feet, to Main Avenue percolation ponds, furnished by Santa Clara County Flood Control and Water District.

11172100 UPPER PENITENCIA CREEK AT SAN JOSE, CALIF.

LOCATION.--Lat 37°23'43", long 121°49'38", on north boundary of San Jose Pala Grant, Santa Clara County, on left bank at downstream side of county road bridge, 0.1 mile upstream from Dutard Creek near northeast limits of San Jose.

DRAINAGE AREA.--21.5 sq mi.

PERIOD OF RECORD.--October 1961 to current year.

GAGE.--Water-stage recorder. Concrete control since Sept. 12, 1963. Datum of gage is 265.30 ft above mean sea level. Prior to Aug. 3, 1962, at site 0.4 mile downstream at different datum.

AVERAGE DISCHARGE.--11 years, 4.25 cfs (3,080 acre-ft per year); median of yearly mean discharges, 2.7 cfs (2,000 acre-ft per year).

EXTREMES.--Current year: Maximum discharge, 12 cfs Dec. 25 (gage height, 3.27 ft); no flow for several days.
Period of record: Maximum discharge, 1,500 cfs Jan. 21, 1967 (gage height, 6.24 ft in gage well; 7.8 ft, from outside gage), from rating curve extended above 270 cfs on basis of slope-area measurement of maximum flow; no flow at times in some years.
Maximum discharge known since at least 1935, 2,100 cfs Apr. 2, 1958, from information furnished by Santa Clara County Flood Control and Water District.

REMARKS.--Records fair. Flow partly regulated by Cherry Flat Reservoir 5 miles upstream (capacity, 500 acre-ft).

DISCHARGE, IN CUBIC FEET PER SECOND, WATER YEAR OCTOBER 1971 TO SEPTEMBER 1972

DAY	OCT	NOV	DEC	JAN	FEB	MAR	APR	MAY	JUN	JUL	AUG	SEP
1	.44	.63	.26	.65	3.1	.67	.31	.19	.11	0	.02	.02
2	.46	.63	.63	.46	2.5	.66	.30	.15	.11	0	.03	.02
3	.46	.62	.44	.72	2.2	.65	.30	.14	.14	.01	.03	.02
4	.47	.30	.38	.88	2.3	.65	.32	.15	.12	.03	.01	.03
5	.42	.18	.37	.72	2.8	.61	.33	.16	.08	.04	.02	.04
6	.42	.22	.37	.72	3.2	.65	.40	.17	.05	.05	.01	.03
7	.47	.23	.30	.65	2.6	.64	.35	.16	.07	.03	.01	.03
8	.43	.24	.31	.65	2.3	.60	.34	.17	.08	.04	.01	.02
9	.49	.22	.34	.65	2.1	.59	.32	.18	.19	.04	.01	.02
10	.48	.16	.38	.58	2.0	.58	.29	.16	.19	.02	.01	.02
11	.49	.21	.31	.54	1.7	.55	.45	.14	.11	.01	0	.06
12	.47	.36	.38	.52	1.5	.56	.57	.11	.09	.01	0	.05
13	.47	.51	.35	.50	1.4	.55	.70	.20	.07	0	0	.06
14	.49	.31	.31	.48	1.3	.52	.71	.34	.05	0	0	.08
15	.49	.21	.31	.46	1.2	.75	.53	.35	.05	0	0	.08
16	.55	.13	.34	.46	1.1	.78	.49	.29	.04	0	0	.07
17	.60	.21	.33	.44	1.2	.69	.42	.20	.04	0	0	.10
18	.60	.20	.34	.44	1.1	.62	.38	.21	.03	0	0	.12
19	.58	.16	.31	.42	1.1	.49	.33	.19	.02	0	0	.06
20	.55	.18	.29	.42	.97	.40	.30	.17	.02	0	0	.07
21	.59	.20	.46	.42	1.0	.43	.28	.13	.02	.01	0	.08
22	.55	.22	.60	.40	1.0	.41	.27	.13	.02	0	0	.08
23	.60	.25	.39	.72	.98	.42	.25	.13	.02	.01	.01	.07
24	.61	.19	.57	.72	.95	.41	.36	.12	.04	.03	0	.09
25	.59	.17	4.6	.80	.80	.39	.27	.12	.07	.02	.01	.11
26	.59	.19	3.2	1.9	.79	.41	.28	.16	.08	.02	.01	.14
27	.60	.21	4.3	3.4	.69	.34	.25	.20	.06	.02	.02	.76
28	.56	.35	3.2	4.6	.65	.36	.24	.16	.04	.01	.02	.21
29	.58	.28	1.9	5.1	.69	.35	.24	.12	.04	.01	.02	.10
30	.62	.23	1.4	4.1	------	.30	.22	.10	.02	.02	.03	.16
31	.61	------	.98	3.6	------	.31	------	.10	------	.03	.02	------
TOTAL	16.33	8.20	28.65	37.12	45.22	16.34	10.80	5.30	2.07	.46	.30	2.80
MEAN	.53	.27	.92	1.20	1.56	.53	.36	.17	.069	.015	.010	.093
MAX	.62	.63	4.6	5.1	3.2	.78	.71	.35	.19	.05	.03	.76
MIN	.42	.13	.26	.40	.65	.30	.22	.10	.02	0	0	.02
AC-FT	32	16	57	74	90	32	21	11	4.1	.9	.6	5.6

CAL YR 1971 TOTAL 697.37 MEAN 1.91 MAX 36 MIN .07 AC-FT 1,380
WTR YR 1972 TOTAL 173.59 MEAN .47 MAX 5.1 MIN 0 AC-FT 344

PEAK DISCHARGE (BASE, 90 CFS).--No peak above base.

11173200 ARROYO HONDO NEAR SAN JOSE, CALIF.

LOCATION.--Lat 37°27'42", long 121°46'06", in NE¼NE¼ sec.32, T.5 S., R.2 E., Santa Clara County, on right bank 150 ft upstream from road bridge, 3.5 miles southeast of Calaveras Dam, and 3.5 miles northeast of city limits of San Jose.

DRAINAGE AREA.--77.1 sq mi.

PERIOD OF RECORD.--October 1968 to current year.

GAGE.--Water-stage recorder. Datum of gage is 783.86 ft above mean sea level.

EXTREMES.--Current year: Maximum discharge, 672 cfs Dec. 25 (gage height, 6.57 ft); minimum daily, 0.11 cfs July 28-30.
Period of record: Maximum discharge, 4,620 cfs Jan. 26, 1969 (gage height, 10.94 ft); minimum daily, 0.11 cfs July 28-30, 1972.

REMARKS.--Records good. No regulation or diversion above station.

DISCHARGE, IN CUBIC FEET PER SECOND, WATER YEAR OCTOBER 1971 TO SEPTEMBER 1972

DAY	OCT	NOV	DEC	JAN	FEB	MAR	APR	MAY	JUN	JUL	AUG	SEP
1	.54	1.2	3.0	29	42	11	4.2	2.9	1.5	1.1	.15	.23
2	.51	1.2	3.1	23	34	9.7	4.3	2.8	1.5	1.0	.15	.29
3	.53	1.2	4.7	22	27	9.0	4.2	2.7	1.4	1.1	.15	.29
4	.56	1.2	6.7	19	30	8.8	4.2	2.7	1.4	1.1	.15	.29
5	.58	1.1	5.9	16	160	8.2	4.2	2.7	1.4	1.1	.15	.29
6	.62	1.1	4.2	14	160	7.9	4.8	2.5	1.4	1.1	.15	.29
7	.74	1.2	3.4	13	81	7.6	5.0	2.6	1.4	.96	.19	.29
8	.78	1.2	3.2	12	55	7.4	4.4	2.7	1.4	.92	.19	.29
9	.78	1.2	3.2	11	43	7.2	4.0	2.8	1.6	.76	.19	.29
10	.90	1.2	3.5	9.7	34	7.1	3.8	2.8	1.5	.78	.18	.29
11	.92	1.4	5.1	9.1	26	7.0	4.8	2.7	1.5	.65	.15	.24
12	.91	1.5	5.2	8.6	21	6.9	6.8	2.5	1.5	.60	.15	.24
13	.87	1.7	5.6	8.3	18	6.7	12	2.4	1.4	.47	.15	.24
14	.90	1.6	6.0	8.0	17	6.4	11	2.2	1.3	.45	.19	.24
15	.91	1.6	5.1	7.4	15	6.2	7.4	2.2	1.3	.37	.19	.27
16	1.0	1.9	4.5	7.2	14	5.9	5.8	2.1	1.3	.39	.19	.26
17	1.1	2.1	4.0	6.9	13	5.8	5.0	2.0	1.4	.35	.19	.29
18	1.1	2.0	3.7	6.8	13	5.7	4.4	1.9	1.4	.30	.19	.29
19	1.0	1.9	3.4	6.6	12	5.6	4.0	1.7	1.3	.31	.15	.29
20	.98	1.8	3.2	6.5	11	5.3	3.8	1.6	1.3	.28	.19	.29
21	.96	1.8	3.2	6.4	11	5.2	3.7	1.6	1.3	.29	.19	.24
22	1.1	1.8	23	6.2	11	5.6	3.7	1.6	1.2	.24	.19	.24
23	1.1	1.8	130	7.5	11	5.7	3.6	1.7	1.3	.25	.19	.24
24	1.2	1.6	58	8.1	10	5.6	3.8	1.8	1.2	.20	.19	.24
25	1.2	1.6	451	8.1	9.9	5.3	3.9	1.8	1.4	.21	.19	.24
26	1.2	1.7	177	13	9.7	5.1	3.7	1.8	1.3	.16	.19	.29
27	1.2	1.8	191	24	9.4	4.8	3.5	1.7	1.3	.15	.24	.41
28	1.1	2.0	120	36	9.1	4.7	3.3	1.7	1.2	.11	.24	.30
29	1.1	2.4	72	45	10	4.7	3.1	1.7	1.2	.11	.24	.24
30	1.2	3.4	51	44	------	4.7	3.0	1.6	1.1	.11	.22	.24
31	1.2	------	38	46	------	4.6	------	1.6	------	.12	.21	------
TOTAL	28.79	49.2	1,400.9	488.4	917.1	201.4	143.4	67.1	40.7	16.04	5.68	8.17
MEAN	.93	1.64	45.2	15.8	31.6	6.50	4.78	2.16	1.36	.52	.18	.27
MAX	1.2	3.4	451	46	160	11	12	2.9	1.6	1.1	.24	.41
MIN	.51	1.1	3.0	6.2	9.1	4.6	3.0	1.6	1.1	.11	.15	.23
AC-FT	57	98	2,780	969	1,820	399	284	133	81	32	11	16

CAL YR 1971 TOTAL 7,277.45 MEAN 19.9 MAX 451 MIN .48 AC-FT 14,430
WTR YR 1972 TOTAL 3,366.86 MEAN 9.20 MAX 451 MIN .11 AC-FT 6,680

PEAK DISCHARGE (BASE, 500 CFS).--Dec. 25 (1100) 672 cfs (6.57 ft).

11176000 ARROYO MOCHO NEAR LIVERMORE, CALIF.

LOCATION.--Lat 37°37'35", long 121°42'13", NW¼SE¼ sec.36, T.3 S., R.2 E., Alameda County, on right bank 100 ft downstream from Mines Road bridge, 2.4 miles upstream from small right-bank tributary, and 5.2 miles southeast of Livermore.

DRAINAGE AREA.--38.2 sq mi.

PERIOD OF RECORD.--January 1912 to September 1930, October 1963 to current year. Records for water year 1914 incomplete, yearly estimate and monthly discharge only for some months, published in WSP 1315-B.

GAGE.--Water-stage recorder. Concrete control since Aug. 5, 1964 (ineffective due to gravel fill). Datum of gage is 746.49 ft above mean sea level. 1912 to October 1914 at present site at different datum. November 1914 to Sept. 30, 1930, at site 1 mile upstream at different datum.

AVERAGE DISCHARGE.--27 years, 4.03 cfs (2,920 acre-ft per year); median of yearly mean discharges, 2.3 cfs (1,700 acre-ft per year).

EXTREMES.--Current year: Maximum discharge, 13 cfs Dec. 25 (gage height, 5.17 ft); no flow for several months.
Period of record: Maximum discharge recorded, 1,250 cfs Jan. 22, 1967 (gage height, 5.90 ft), from rating curve extended above 460 cfs; maximum daily discharge, 1,000 cfs Jan. 25, 1914 (estimated); no flow for parts of most years.
Flood of Dec. 23, 1955, discharge 1,880 cfs (by slope-area measurement of maximum flow).

REMARKS.--Records fair. No regulation or diversion above station.

DISCHARGE, IN CUBIC FEET PER SECOND, WATER YEAR OCTOBER 1971 TO SEPTEMBER 1972

DAY	OCT	NOV	DEC	JAN	FEB	MAR	APR	MAY	JUN	JUL	AUG	SEP
1		0	.04	1.3	1.2	.98	.41	.13				
2		0	.13	1.2	1.2	.96	.35	.11				
3		0	.14	1.1	1.1	.88	.30	.11				
4		0	.11	1.1	1.1	.80	.30	.08				
5		0	.13	.83	2.9	.79	.30	.11				
6		0	.16	.87	7.2	.80	.34	.10				
7		0	.23	.88	3.2	.92	.30	.08				
8		0	.25	.88	1.9	.72	.29	.08				
9		0	.25	.87	1.5	.70	.25	.08				
10		0	.25	.88	1.3	.62	.25	.08				
11		0	.25	.79	.99	.58	.30	.06				
12		0	.32	.79	.86	.52	.36	.05				
13		0	.36	.63	.73	.55	.60	.04				
14		0	.36	.68	.70	.57	.78	.03				
15		0	.36	.69	.62	.62	.65	.03				
16		0	.36	.68	.57	.61	.52	.02				
17		0	.38	.62	.55	.55	.45	.01				
18		0	.42	.62	.55	.55	.36	.01				
19		0	.42	.61	.55	.55	.30	.01				
20		.01	.42	.62	.55	.48	.30	.01				
21		.01	.52	.61	.50	.48	.22	.02				
22		.01	1.5	.62	.48	.48	.21	.01				
23		.01	3.9	.59	.48	.48	.21	0				
24		.01	3.9	.70	.48	.52	.21	0				
25		.01	8.2	.70	.48	.57	.17	0				
26		.01	6.0	.77	.42	.55	.17	0				
27		.02	7.6	1.9	.57	.54	.17	0				
28		.02	5.4	1.8	.80	.48	.14	0				
29		.04	3.3	1.4	.92	.48	.14	0				
30		.04	2.3	1.2	------	.48	.14	0				
31		------	1.7	1.1	------	.46	------	0	------			------
TOTAL	0	.19	49.66	28.03	34.40	19.27	9.49	1.26	0	0	0	0
MEAN	0	.006	1.60	.90	1.19	.62	.32	.041	0	0	0	0
MAX	0	.04	8.2	1.9	7.2	.98	.78	.13	0	0	0	0
MIN	0	0	.04	.59	.42	.46	.14	0	0	0	0	0
AC-FT	0	.4	99	56	68	38	19	2.5	0	0	0	0

CAL YR 1971 TOTAL 498.09 MEAN 1.36 MAX 33 MIN 0 AC-FT 988
WTR YR 1972 TOTAL 142.30 MEAN .39 MAX 8.2 MIN 0 AC-FT 282

PEAK DISCHARGE (BASE, 90 CFS).--No peak above base.

11176100 ARROYO LAS POSITAS ABOVE LIVERMORE, CALIF.

LOCATION.--Lat 37°41'40", long 121°42'49", in Las Positas Valley Grant, Alameda County, on left bank at northwest corner boundary of Lawrence Livermore Laboratory, 1,100 ft upstream from Western Pacific Railroad, and 3.0 miles northeast of Livermore.

DRAINAGE AREA.--7.82 sq mi.

PERIOD OF RECORD.--December 1971 to September 1972.

GAGE.--Water-stage recorder and concrete control. Altitude of gage is 570 ft (from topographic map).

EXTREMES.--Maximum discharge during period, 59 cfs Jan. 27 (gage height, 3.30 ft); no flow many days.

REMARKS.--Records fair. Small releases above station from cooling water towers at laboratory and from backwashing at filtration plant.

DISCHARGE, IN CUBIC FEET PER SECOND, DECEMBER 1971 TO SEPTEMBER 1972

DAY	OCT	NOV	DEC	JAN	FEB	MAR	APR	MAY	JUN	JUL	AUG	SEP
1			-	0	.03	0	.01	0	.02	.08	0	.02
2			-	0	.03	0	0	.02	.03	.08	.01	.02
3			-	0	.03	.03	0	.03	0	.01	0	.02
4			-	0	.48	.61	0	.03	.02	0	.02	.01
5			-	0	1.0	.04	0	.04	.03	0	.01	.02
6			-	.01	.02	.01	0	.03	.04	.02	.02	.02
7			-	0	0	0	0	.02	.02	.02	0	.01
8			-	.03	.02	0	0	.03	.01	0	.01	.02
9			-	0	0	0	0	.03	.02	.01	.02	.02
10			-	.01	0	0	0	.03	.03	.02	.02	.02
11			-	.04	.02	0	.02	.03	.03	.02	.02	.02
12			-	.01	0	0	.54	.04	.03	.02	.02	.02
13			-	.01	0	0	.06	.02	.16	0	.02	.02
14			-	.07	0	0	.02	.01	.05	.02	.02	.02
15			-	.03	0	0	0	.01	.03	.03	.02	.01
16			-	.02	0	0	0	.03	.05	.02	.02	0
17			-	.02	.04	0	0	.03	.02	.02	.02	0
18			-	.02	0	0	0	.02	.05	.01	.02	0
19			-	.03	0	0	.17	.02	.10	.03	.02	.01
20			.01	.03	0	0	.03	0	.18	.04	.02	0
21			.48	.03	.02	0	.05	.03	.06	.16	.02	0
22			1.7	0	.21	0	.02	.03	.03	.02	.02	0
23			.12	.14	.03	.01	0	.03	.03	0	.02	0
24			1.7	.02	.07	.02	.73	.04	.02	0	.02	0
25			8.1	.14	.02	.03	.02	.06	.04	.01	.03	.01
26			.01	.96	0	.02	.09	.04	.14	.01	.02	.66
27			.72	2.6	0	.02	.02	.02	.27	.02	.02	2.8
28			.01	.02	0	.02	.02	.04	.04	.01	.04	.02
29			0	0	0	.03	.02	.04	.05	0	.05	.02
30			0	0	------	.03	.01	.03	.30	0	.03	.02
31		------	0	0	------	.02	------	.03	------	0	.02	------
TOTAL			-	4.24	2.02	.89	1.83	.86	1.90	.68	.60	3.81
MEAN			-	.14	.070	.029	.061	.028	.063	.022	.019	.13
MAX			-	2.6	1.0	.61	.73	.06	.30	.16	.05	2.8
MIN			-	0	0	0	0	0	0	0	0	0
AC-FT			-	8.4	4.0	1.8	3.6	1.7	3.8	1.4	1.2	7.6

PEAK DISCHARGE (BASE, 40 CFS).--Jan. 27 (0730) 59 cfs (3.30 ft).

11176200 ARROYO MOCHO NEAR PLEASANTON, CALIF.

LOCATION.--Lat 37°41'26", long 121°52'20", in Santa Rita Grant, Alameda County, on right bank 0.3 mile upstream from Santa Rita Road, 0.8 mile downstream from Arroyo Las Positas, and 2 miles north of Pleasanton.

DRAINAGE AREA.--141 sq mi.

PERIOD OF RECORD.--September 1962 to current year.

GAGE.--Water-stage recorder and concrete control. Datum of gage is 319.51 ft above mean sea level. Prior to Oct. 30, 1967, at site 0.4 mile downstream at different datum. Dec. 8, 1967, to July 7, 1968, nonrecording gage at bridge 0.3 mile downstream at different datum.

AVERAGE DISCHARGE.--10 years, 13.3 cfs (9,640 acre-ft per year); median of yearly mean discharges, 11 cfs (8,000 acre-ft per year).

EXTREMES.--Current year: Maximum discharge, 165 cfs Dec. 25 (gage height, 9.62 ft); minimum daily, 0.10 cfs Mar. 28.
Period of record: Maximum discharge, 1,760 cfs Feb. 1, 1963 (gage height, 8.60 ft, site and datum then in use), from rating curve extended above 58 cfs on basis of slope-area measurement of maximum flow; no flow at times.

REMARKS.--Records fair. No regulation. Waste water from Livermore sewage disposal plant and gravel operations enters stream about 4 miles upstream from gage.

DISCHARGE, IN CUBIC FEET PER SECOND, WATER YEAR OCTOBER 1971 TO SEPTEMBER 1972

DAY	OCT	NOV	DEC	JAN	FEB	MAR	APR	MAY	JUN	JUL	AUG	SEP
1	2.6	3.5	4.0	.72	2.0	.75	3.8	1.5	1.6	1.0	2.7	2.4
2	2.5	3.8	12	.30	1.6	2.4	3.1	1.8	2.1	1.1	1.8	1.7
3	2.9	3.2	8.6	.92	2.4	4.1	2.4	1.4	1.8	1.1	1.3	2.0
4	2.3	3.5	4.2	1.1	2.2	3.9	1.9	1.4	2.0	1.4	1.7	2.3
5	1.9	3.9	4.3	.27	15	3.5	1.0	1.3	2.1	1.4	1.7	2.9
6	2.0	3.9	4.6	.27	5.8	2.7	1.2	2.3	1.9	3.6	1.5	2.3
7	1.9	4.2	4.2	.58	3.7	3.7	3.6	3.0	2.4	3.3	1.2	1.4
8	2.0	5.7	4.3	.16	3.7	3.2	2.7	3.4	2.1	2.2	1.7	1.2
9	2.3	4.1	4.2	.30	4.4	3.8	2.5	2.5	2.5	1.3	1.9	1.2
10	2.6	3.4	4.4	1.4	3.2	4.1	2.7	1.7	2.9	2.0	1.8	2.5
11	2.9	4.4	4.4	.46	3.4	3.8	3.0	1.6	2.4	2.2	1.3	3.1
12	2.6	4.8	4.8	.33	3.2	3.7	4.0	1.8	2.0	1.6	.92	2.6
13	2.4	6.1	5.1	.24	3.2	4.2	3.8	1.9	1.5	1.1	1.0	2.4
14	2.2	5.8	4.5	.39	3.7	4.1	3.4	2.6	1.2	1.2	1.2	1.7
15	2.0	4.6	4.0	.87	2.8	3.8	3.1	2.3	1.9	2.1	1.0	2.9
16	2.5	4.2	4.4	1.0	3.0	4.2	4.0	1.5	2.6	2.3	1.3	3.0
17	3.3	3.9	4.5	.87	3.1	3.8	2.9	1.6	2.2	1.5	1.3	3.1
18	3.4	4.3	4.2	1.1	3.4	3.9	2.9	1.6	1.4	1.0	1.8	3.1
19	3.5	3.5	4.4	.72	3.5	4.2	2.5	1.2	1.6	1.3	2.0	2.5
20	3.7	2.8	4.6	2.0	2.1	6.2	2.7	2.2	1.7	1.8	2.5	2.4
21	3.6	2.5	4.9	1.7	2.8	5.9	3.0	2.6	1.9	1.4	2.2	1.2
22	3.2	2.7	9.1	1.5	4.7	4.0	3.6	2.8	1.3	1.9	2.0	1.1
23	2.9	4.6	16	1.5	3.4	1.1	3.5	2.6	1.2	1.4	2.4	1.1
24	3.2	3.9	13	2.0	3.4	.58	3.9	3.8	1.6	1.7	1.4	1.1
25	3.7	4.3	85	2.0	2.7	.30	2.7	1.4	3.3	1.6	1.4	1.4
26	3.3	4.2	8.5	5.0	3.7	.16	2.3	.77	1.7	1.9	2.6	2.1
27	1.1	2.7	13	30	4.1	.14	2.6	.87	2.1	2.5	3.4	5.3
28	.77	4.3	5.1	15	2.8	.10	2.6	3.2	1.6	2.6	3.5	5.5
29	2.1	6.0	2.0	7.0	2.8	.54	1.7	2.5	1.1	1.8	3.0	1.5
30	3.1	4.5	2.6	3.0	------	4.7	1.5	2.2	1.1	1.9	3.3	.98
31	3.3	------	1.6	1.5	------	1.8	------	2.2	------	1.7	2.9	------
TOTAL	81.77	123.3	260.5	84.20	105.8	93.37	84.6	63.54	56.8	54.9	59.72	67.98
MEAN	2.64	4.11	8.40	2.72	3.65	3.01	2.82	2.05	1.89	1.77	1.93	2.27
MAX	3.7	6.1	85	30	15	6.2	4.0	3.8	3.3	3.6	3.5	5.5
MIN	.77	2.5	1.6	.16	1.6	.10	1.0	.77	1.1	1.0	.92	.98
AC-FT	162	245	517	167	210	185	168	126	113	109	118	135

CAL YR 1971 TOTAL 2,181.41 MEAN 5.98 MAX 115 MIN 0 AC-FT 4,330
WTR YR 1972 TOTAL 1,136.48 MEAN 3.11 MAX 85 MIN .10 AC-FT 2,250

PEAK DISCHARGE (BASE, 150 CFS).--Dec. 25 (1545) 165 cfs (9.62 ft).

11176400 ARROYO VALLE ABOVE LANG CANYON, NEAR LIVERMORE, CALIF.

LOCATION.--Lat 37°33'00", long 121°39'57", in SE¼ sec.29, T.4 S., R.3 E., Alameda County, on left bank 700 ft upstream from small right-bank tributary, 1,200 ft upstream from Lang Canyon, and 10.5 miles southeast of Livermore.

DRAINAGE AREA.--126 sq mi.

PERIOD OF RECORD.--October 1963 to current year.

GAGE.--Water-stage recorder. Altitude of gage is 800 ft (from topographic map).

AVERAGE DISCHARGE.--9 years, 25.9 cfs (18,760 acre-ft per year).

EXTREMES.--Current year: Maximum discharge, 105 cfs Dec. 25 (gage height, 3.27 ft); no flow many days.
Period of record: Maximum discharge, 5,340 cfs Jan. 25, 1969 (gage height, 8.90 ft); no flow at times in each year.

REMARKS.--Records good. No regulation or diversion above station.

DISCHARGE, IN CUBIC FEET PER SECOND, WATER YEAR OCTOBER 1971 TO SEPTEMBER 1972

DAY	OCT	NOV	DEC	JAN	FEB	MAR	APR	MAY	JUN	JUL	AUG	SEP
1		0	.14	7.1	8.7	4.2	1.6	.71	.15			
2		0	.54	5.7	7.2	3.4	1.6	.68	.13			
3		0	.67	4.5	5.9	3.2	1.6	.64	.10			
4		0	.69	3.8	6.7	3.0	1.6	.63	.08			
5		0	.48	3.3	55	2.9	1.7	.63	.05			
6		0	.37	3.0	47	2.7	1.8	.63	.03			
7		0	.31	3.0	25	2.6	1.9	.70	.02			
8		0	.23	2.8	18	2.5	1.6	.74	.01			
9		0	.24	2.6	14	2.5	1.6	.88	.01			
10		0	.30	2.5	12	2.5	1.6	.86	.02			
11		0	.32	2.3	10	2.4	2.5	.75	.01			
12		0	.60	2.3	7.8	2.3	4.1	.66	.01			
13		0	.95	2.3	7.1	2.3	5.9	.58	.01			
14		0	.69	2.2	6.7	2.2	3.5	.50	.01			
15		0	.55	2.0	5.9	2.1	2.5	.42	.01			
16		0	.49	1.9	5.5	2.0	1.9	.37	.01			
17		0	.43	1.8	5.1	1.9	1.6	.37	0			
18		0	.41	1.8	4.8	1.8	1.4	.37	0			
19		0	.37	1.8	4.4	1.8	1.3	.38	0			
20		.02	.37	1.8	4.1	1.6	1.1	.45	0			
21		.02	.45	1.8	3.8	1.6	1.2	.54	0			
22		.03	2.7	1.8	3.8	2.1	1.2	.63	0			
23		.04	12	2.3	3.8	2.2	1.1	.63	0			
24		.04	8.6	2.3	3.5	1.9	1.5	.60	0			
25		.05	66	2.3	3.5	1.8	1.5	.59	0			
26		.05	33	3.2	3.5	1.7	1.3	.52	0			
27		.08	42	8.5	3.2	1.6	1.1	.50	0			
28		.09	29	12	3.3	1.6	.91	.38	0			
29		.13	17	10	4.5	1.6	.81	.28	0			
30		.14	12	10	------	1.6	.74	.22	0			
31		------	9.0	9.7	------	1.6	------	.17	------			------
TOTAL	0	.69	240.90	122.4	293.8	69.2	53.76	17.01	.66	0	0	0
MEAN	0	.023	7.77	3.95	10.1	2.23	1.79	.55	.022	0	0	0
MAX	0	.14	66	12	55	4.2	5.9	.88	.15	0	0	0
MIN	0	0	.14	1.8	3.2	1.6	.74	.17	0	0	0	0
AC-FT	0	1.4	478	243	583	137	107	34	1.3	0	0	0

CAL YR 1971 TOTAL 2,846.83 MEAN 7.80 MAX 213 MIN 0 AC-FT 5,650
WTR YR 1972 TOTAL 798.42 MEAN 2.18 MAX 66 MIN 0 AC-FT 1,580

PEAK DISCHARGE (BASE, 500 CFS).--No peak above base.

11176500 ARROYO VALLE NEAR LIVERMORE, CALIF.

LOCATION.--Lat 37°37'24", long 121°45'28", in Valle de San Jose Grant, Alameda County, on right bank 900 ft downstream from highway bridge, 1.1 miles upstream from Dry Creek, 1.3 miles downstream from Del Valle Dam, 4.1 miles south of Livermore, and 6.9 miles southeast of Pleasanton.

DRAINAGE AREA.--147 sq mi.

PERIOD OF RECORD.--January 1912 to September 1930, October 1957 to current year. Monthly discharge only for some periods, published in WSP 1315-B. Published as Arroyo del Valle near Livermore, 1912-29.

GAGE.--Water-stage recorder and concrete control. Datum of gage is 510.44 ft above mean sea level. Prior to November 1914, at site 900 ft upstream at different datum. Nov. 1, 1914 to Sept. 30, 1930, at site 300 ft upstream at different datum.

AVERAGE DISCHARGE.--29 years (1912-30, 1957-68), 29.6 cfs (21,450 acre-ft per year); median of yearly mean discharges, 20 cfs (14,500 acre-ft per year).

EXTREMES.--Current year: Maximum discharge, 88 cfs July 11 (gage height, 3.09 ft); minimum daily, 0.78 cfs Mar. 29.
Period of record: Maximum discharge, 12,200 cfs Apr. 2, 1958 (gage height, 10.91 ft); no flow at times. Maximum discharge since construction of Del Valle Dam in 1968, 885 cfs Mar. 2, 1969 (gage height, 4.88 ft).
Flood of Dec. 23, 1955, reached a stage of 13.93 ft, from floodmarks (discharge, 18,200 cfs on basis of contracted-opening and slope-area measurement of maximum flow).

REMARKS.--Records good. Flow regulated by Del Valle Reservoir 1.3 miles upstream beginning in September 1968 (capacity, 77,100 acre-ft). Water from Sacramento-San Joaquin Delta imported through South Bay Aqueduct can be pumped into Del Valle Reservoir for storage and later released into the channel for downstream percolation or returned to the South Bay Aqueduct. Records of water temperatures for the current year are published in Part 2 of this report.

DISCHARGE, IN CUBIC FEET PER SECOND, WATER YEAR OCTOBER 1971 TO SEPTEMBER 1972

DAY	OCT	NOV	DEC	JAN	FEB	MAR	APR	MAY	JUN	JUL	AUG	SEP
1	17	41	7.6	6.3	7.2	3.6	1.3	9.9	10	8.2	9.9	9.4
2	17	30	14	12	3.6	7.2	9.8	10	10	8.8	9.9	9.4
3	16	30	7.4	7.1	7.1	3.7	1.3	10	10	9.2	9.9	9.5
4	12	31	13	13	1.1	7.3	9.3	10	10	10	9.9	9.7
5	9.4	29	7.4	6.2	1.1	3.6	1.4	10	9.9	9.6	9.9	9.8
6	5.1	29	13	13	.91	7.0	10	10	10	9.6	9.9	9.9
7	1.4	29	7.1	6.0	.80	3.6	1.4	9.9	10	9.1	9.9	9.9
8	1.4	29	13	12	.80	7.1	9.7	9.9	10	9.3	9.9	9.8
9	1.3	29	6.8	5.9	.80	3.7	1.4	10	10	9.4	9.9	9.9
10	1.2	29	13	13	4.9	7.3	9.6	10	10	20	9.4	9.7
11	1.2	30	6.3	5.3	9.9	3.7	1.6	9.9	10	74	9.9	8.3
12	1.2	29	12	11	5.9	6.9	11	9.9	9.9	84	9.9	5.9
13	1.2	29	7.2	1.3	12	1.1	1.6	9.8	9.4	82	10	9.9
14	1.3	29	14	1.3	5.1	.95	11	9.9	5.3	82	10	9.8
15	1.6	30	6.4	1.3	9.9	.92	1.6	9.9	8.8	82	10	9.8
16	1.8	30	13	1.2	3.6	.91	10	9.9	8.8	82	10	9.9
17	1.8	30	6.8	5.0	9.6	.90	1.5	10	9.0	82	9.4	9.9
18	1.8	30	14	13	7.8	.90	9.4	10	9.1	82	7.7	9.9
19	1.8	31	6.1	5.2	1.1	.87	1.7	10	8.8	77	1.6	7.7
20	9.2	26	7.7	13	1.0	.80	8.7	10	8.8	77	1.4	7.7
21	12	31	7.5	4.9	.94	.81	1.7	10	8.8	77	1.3	7.7
22	13	30	7.9	13	2.4	.94	10	10	9.3	77	1.1	7.7
23	13	30	13	4.7	9.4	.94	1.3	11	9.4	77	9.4	7.7
24	13	25	7.5	13	9.5	.94	10	11	9.4	37	9.9	7.7
25	12	17	14	2.9	5.5	.94	11	11	9.4	10	9.9	7.7
26	17	17	7.3	8.2	3.5	.83	9.6	11	9.4	9.9	9.9	7.7
27	29	17	13	3.1	7.0	.80	9.4	11	9.4	9.9	6.9	7.7
28	29	17	6.5	8.2	3.7	.80	9.9	11	9.4	9.9	9.9	7.7
29	30	17	12	2.6	7.0	.78	9.9	10	9.2	9.8	9.9	7.0
30	35	13	6.8	7.5	------	4.3	9.9	10	9.1	9.6	11	6.5
31	44	------	13	3.6	------	9.1	------	10	------	9.4	9.9	------
TOTAL	351.7	814	304.3	223.8	143.15	93.23	196.0	315.0	280.6	1,243.7	267.5	260.9
MEAN	11.3	27.1	9.82	7.22	4.94	3.01	6.53	10.2	9.35	40.1	8.63	8.70
MAX	44	41	14	13	12	9.1	11	11	10	84	11	9.9
MIN	1.2	13	6.1	1.2	.80	.78	1.3	9.8	5.3	8.2	1.1	5.9
AC-FT	698	1,610	604	444	284	185	389	625	557	2,470	531	518

CAL YR 1971 TOTAL 5,608.20 MEAN 15.4 MAX 62 MIN .44 AC-FT 11,120
WTR YR 1972 TOTAL 4,493.88 MEAN 12.3 MAX 84 MIN .78 AC-FT 8,910

11176600 ARROYO VALLE AT PLEASANTON, CALIF.

LOCATION.--Lat 37°40'02", long 121°53'02", in Valle de San Jose Grant, Alameda County, on right bank 0.4 mile northwest of Pleasanton, and 5.8 miles west of Livermore.

DRAINAGE AREA.--171 sq mi.

PERIOD OF RECORD.--October 1957 to current year.

GAGE.--Water-stage recorder. Concrete control since Sept. 2, 1970. Datum of gage is 311.80 ft above mean sea level.

AVERAGE DISCHARGE.--11 years (1957-68), 27.7 cfs (20,050 acre-ft per year).

EXTREMES.--Current year: Maximum discharge, 117 cfs July 25 (gage height, 8.58 ft); no flow at times.
Period of record: Maximum discharge, 11,300 cfs Apr. 3, 1958 (gage height, 25.36 ft); no flow at times in most years. Maximum discharge since construction of Del Valle Dam in 1968, 897 cfs Mar. 3, 1969 (gage height, 11.43 ft).

REMARKS.--Records good. Flow regulated by Del Valle Reservoir 10 miles upstream beginning in September 1968 (capacity, 77,100 acre-ft). Water imported from Sacramento-San Joaquin Delta (see REMARKS for sta 11176500). Flow regulated by pumping and gravel operations above station.

COOPERATION.--Seven discharge measurements furnished by Alameda County Flood Control and Water Conservation District.

DISCHARGE, IN CUBIC FEET PER SECOND, WATER YEAR OCTOBER 1971 TO SEPTEMBER 1972

DAY	OCT	NOV	DEC	JAN	FEB	MAR	APR	MAY	JUN	JUL	AUG	SEP
1	7.4	29	8.7	11	.50	0		0	.12	0	1.4	
2	6.1	28	7.0	8.4	.13	0		0	.14	0	1.0	
3	6.1	20	7.7	9.8	0	0		0	.08	0	.77	
4	6.1	20	4.8	12	.49	0		0	0	0	.66	
5	5.2	22	5.6	6.2	4.6	0		0	0	0	.55	
6	2.8	21	3.7	4.2	1.0	0		0	0	0	.48	
7	1.5	21	4.3	3.9	.94	0		0	0	0	.42	
8	.28	21	2.8	2.9	.91	0		0	0	0	.22	
9	0	21	3.5	2.5	.08	0		0	0	0	.02	
10	0	21	2.8	2.3	0	.13		0	0	0	0	
11	0	21	3.0	2.7	0	4.8		0	0	0	0	
12	0	22	3.6	2.5	0	8.0		0	0	22	0	
13	0	23	3.0	2.3	0	8.0		0	0	49	0	
14	0	22	2.4	2.0	0	.28		0	0	57	0	
15	0	22	2.9	.96	0	0		0	0	62	0	
16	0	22	2.6	.38	0	.86		0	0	64	0	
17	0	23	2.5	0	0	2.1		0	0	66	0	
18	0	23	2.2	0	0	3.7		0	0	67	0	
19	0	23	2.8	0	4.7	6.6		0	0	68	0	
20	0	23	2.3	0	7.8	4.8		0	0	66	0	
21	0	21	2.2	0	1.6	.28		0	0	63	0	
22	0	23	8.9	.64	.28	0		0	0	63	0	
23	0	23	8.4	1.4	0	0		0	0	64	0	
24	0	23	13	2.1	0	0		0	0	64	0	
25	0	20	23	3.4	0	.28		0	0	61	0	
26	0	13	16	2.9	0	5.5		.23	0	47	0	
27	0	11	12	7.0	0	4.2		.58	0	7.7	0	
28	0	11	10	2.5	0	.17		.55	0	4.5	0	
29	0	11	8.4	1.6	0	0		.35	0	2.8	0	
30	7.4	11	9.7	1.1	------	0		.21	0	2.1	0	
31	19	------	8.1	.58	------	0	------	.26	------	1.8	0	------
TOTAL	61.88	615	197.9	97.26	23.03	49.70	0	2.18	.34	901.9	5.52	0
MEAN	2.00	20.5	6.38	3.14	.79	1.60	0	.070	.011	29.1	.18	0
MAX	19	29	23	12	7.8	8.0	0	.58	.14	68	1.4	0
MIN	0	11	2.2	0	0	0	0	0	0	0	0	0
AC-FT	123	1,220	393	193	46	99	0	4.3	.7	1,790	11	0

CAL YR 1971 TOTAL 3,419.67 MEAN 9.37 MAX 60 MIN 0 AC-FT 6,780
WTR YR 1972 TOTAL 1,954.71 MEAN 5.34 MAX 68 MIN 0 AC-FT 3,880

11177000 ARROYO DE LA LAGUNA NEAR PLEASANTON, CALIF.

LOCATION.--Lat 37°36'55", long 121°52'50", in Valle de San Jose Grant, Alameda County, on right bank 0.3 mile upstream from small left-bank tributary, 0.8 mile downstream from highway bridge, and 3.2 miles south of Pleasanton.

DRAINAGE AREA.--405 sq mi.

PERIOD OF RECORD.--January 1912 to September 1930, October 1969 to current year. Monthly discharge only for some periods, published in WSP 1315-B.

GAGE.--Water-stage recorder. Datum of gage is 251.40 ft above mean sea level. January 1912 to September 1917, at site 3.0 miles upstream at different datum. October 1917 to September 1930, at site 0.8 mile downstream at different datum.

AVERAGE DISCHARGE.--17 years (1912-19, 1920-30), 42.5 cfs (30,790 acre-ft per year).

EXTREMES.--Current year: Maximum discharge, 348 cfs Dec. 25 (gage height, 5.39 ft); minimum daily, 5.0 cfs Aug. 17.
Period of record: Maximum daily discharge, 9,810 cfs Jan. 25, 1914; no flow at times.

REMARKS.--Records fair. Flow partly regulated by Del Valle Reservoir 15 miles upstream (capacity, 77,100 acre-ft). Water imported from Sacramento-San Joaquin Delta (see REMARKS for sta 11176500). Water from South Bay Aqueduct at times imported through Vallecitos Creek 1.5 miles downstream.

DISCHARGE, IN CUBIC FEET PER SECOND, WATER YEAR OCTOBER 1971 TO SEPTEMBER 1972

DAY	OCT	NOV	DEC	JAN	FEB	MAR	APR	MAY	JUN	JUL	AUG	SEP
1	14	36	21	16	8.6	7.7	7.8	7.3	6.9	5.8	7.8	7.4
2	13	36	60	14	8.2	7.5	8.9	7.1	9.4	5.8	7.5	7.0
3	14	29	32	14	8.7	9.6	8.1	7.0	8.0	8.7	6.2	6.4
4	13	29	18	17	13	8.2	8.2	6.6	7.0	6.2	6.5	6.6
5	13	32	15	12	66	9.4	10	6.8	7.3	6.0	7.3	7.5
6	10	31	15	12	26	9.1	13	7.6	9.7	6.1	7.0	7.1
7	9.7	32	14	10	12	8.5	8.9	8.9	7.3	6.1	6.2	6.0
8	8.9	33	13	10	12	9.6	8.5	9.0	7.3	6.3	7.6	5.8
9	8.6	34	13	9.5	11	9.4	9.0	8.6	7.7	6.2	6.6	6.3
10	9.1	31	15	10	10	10	8.8	7.7	12	6.1	6.0	6.5
11	9.8	34	13	11	9.7	12	18	8.4	8.7	7.4	5.7	8.0
12	8.4	37	23	11	9.6	17	21	8.5	7.7	16	5.9	8.2
13	8.1	60	17	9.4	9.4	16	19	9.1	7.7	54	5.4	7.8
14	8.4	40	14	9.6	9.2	12	9.8	10	7.3	61	5.6	6.0
15	7.5	33	12	9.2	8.7	11	9.7	10	8.3	65	5.6	7.6
16	9.3	32	12	8.8	8.9	9.9	11	7.5	9.4	68	5.1	8.1
17	9.3	32	12	8.9	8.7	12	8.9	9.0	9.7	69	5.0	8.6
18	10	33	12	8.7	9.0	13	9.2	9.2	7.3	69	6.0	8.7
19	10	33	12	8.8	10	14	8.3	8.4	7.7	70	6.5	9.0
20	10	32	13	9.4	14	15	8.0	9.5	7.3	68	7.5	7.7
21	10	31	12	10	9.7	11	8.0	11	7.3	64	7.1	6.0
22	9.7	31	84	9.9	22	13	9.2	10	6.6	64	6.5	6.1
23	8.4	33	55	15	11	9.4	9.2	10	8.0	64	7.3	5.6
24	9.9	33	59	11	9.6	6.9	15	8.7	8.3	65	6.1	6.0
25	9.6	31	224	17	8.5	7.1	10	11	8.7	37	5.7	5.9
26	11	26	49	17	8.7	9.4	6.8	7.9	6.6	18	6.6	7.9
27	8.5	23	45	73	8.5	11	7.5	6.9	6.6	12	8.2	20
28	7.4	26	24	23	8.8	6.6	8.8	7.1	6.0	10	7.7	15
29	8.8	28	19	12	12	5.6	8.2	7.6	5.3	7.3	7.6	8.2
30	13	25	18	9.7	------	8.0	7.7	7.3	5.3	8.3	7.8	6.7
31	29	------	16	9.0	------	8.1	------	9.4	------	7.3	7.8	------
TOTAL	329.4	976	961	425.9	371.5	317.0	304.5	263.1	232.4	967.6	205.4	233.7
MEAN	10.6	32.5	31.0	13.7	12.8	10.2	10.2	8.49	7.75	31.2	6.63	7.79
MAX	29	60	224	73	66	17	21	11	12	70	8.2	20
MIN	7.4	23	12	8.7	8.2	5.6	6.8	6.6	5.3	5.8	5.0	5.6
AC-FT	653	1,940	1,910	845	737	629	604	522	461	1,920	407	464

CAL YR 1971 TOTAL 9,567.8 MEAN 26.2 MAX 332 MIN 5.7 AC-FT 18,980
WTR YR 1972 TOTAL 5,587.5 MEAN 15.3 MAX 224 MIN 5.0 AC-FT 11,080

11179000 ALAMEDA CREEK NEAR NILES, CALIF.

LOCATION.--Lat 37°35'14", long 121°57'35", in NW¼ sec.15, T.4 S., R.1 W., Alameda County, on right bank 0.3 mile downstream from railroad bridge, and 1.2 miles northeast of Niles.

DRAINAGE AREA.--633 sq mi.

PERIOD OF RECORD.--January 1891 to current year. Monthly discharge only for some periods, published in WSP 1315-B. Published as "at Niles Dam" 1891-1900, and as "at Sunolglen" 1901-21.

GAGE.--Water-stage recorder and concrete control. Datum of gage is 85.65 ft above mean sea level. Prior to 1901, nonrecording gage at site 1 mile upstream at different datum. 1901 to Sept. 30, 1914, nonrecording gage and Oct. 1, 1914, to Sept. 30, 1916, water-stage recorder at site 4.5 miles upstream at different datum. Oct. 1, 1916, to Dec. 17, 1923, water-stage recorder at site 800 ft upstream at different datum.

AVERAGE DISCHARGE.--71 years (1891-1962), 123 cfs (89,050 acre-ft per year); 10 years (1962-72), 87.2 cfs (63,180 acre-ft per year).

EXTREMES.--Current year: Maximum discharge, 331 cfs Dec. 25 (gage height, 4.11 ft); minimum daily, 5.5 cfs Oct. 29.
Period of record: Maximum discharge, 29,000 cfs Dec. 23, 1955 (gage height, 14.9 ft); minimum (1891-1962), no flow at times; minimum daily (1963 to current year), 1.4 cfs Dec. 7, 8, 1962.

REMARKS.--Records good. Flow regulated by Calaveras Reservoir (usable capacity, 96,800 acre-ft, most of which is diverted for San Francisco water supply) beginning in 1916 although dam not completed until 1925, by San Antonio Reservoir beginning in February 1965 (capacity, 51,000 acre-ft), and by Del Valle Reservoir 23 miles upstream beginning in September 1968 (capacity, 77,100 acre-ft). Natural flow of stream affected by imported water from Delta-Mendota Canal beginning in 1962. Other diversions from ground water basin for irrigation of 9,000 acres above station. Records of water temperatures and suspended-sediment discharge for the current year are published in Part 2 of this report.

REVISIONS (WATER YEARS).--WSP 1315-B: 1921. WSP 1515: 1951-52, 1956. WSP 1565: 1945.

DISCHARGE, IN CUBIC FEET PER SECOND, WATER YEAR OCTOBER 1971 TO SEPTEMBER 1972

DAY	OCT	NOV	DEC	JAN	FEB	MAR	APR	MAY	JUN	JUL	AUG	SEP
1	25	32	30	23	13	96	40	56	68	64	63	66
2	24	36	56	22	12	96	42	38	66	65	66	68
3	24	28	51	18	28	99	39	36	66	64	71	66
4	23	31	31	41	33	75	39	36	69	63	71	66
5	13	48	19	46	101	45	40	36	71	65	70	68
6	12	50	26	45	59	43	49	38	73	63	71	70
7	10	51	61	42	26	85	47	37	65	64	71	68
8	9.5	52	62	47	21	66	54	39	53	65	70	67
9	8.4	53	61	56	20	93	54	41	59	65	68	67
10	7.1	50	64	70	18	65	53	49	72	63	68	67
11	6.8	52	63	97	16	101	64	50	66	15	68	69
12	6.9	59	69	21	15	104	81	50	62	6.4	70	69
13	6.2	111	81	31	15	80	85	51	60	44	71	68
14	5.8	111	105	41	14	71	72	60	48	58	68	67
15	6.0	89	104	41	14	63	71	71	60	63	68	66
16	7.0	35	101	40	13	52	72	68	61	66	70	63
17	8.2	54	63	40	13	51	70	69	63	67	54	63
18	8.4	33	63	16	30	56	68	69	63	69	61	66
19	8.5	34	62	11	30	59	67	71	61	70	71	68
20	8.8	33	49	11	23	61	68	72	63	69	70	61
21	9.3	32	53	11	18	57	67	74	66	66	71	59
22	9.2	30	80	11	28	59	68	72	64	65	73	57
23	8.7	31	94	62	19	57	69	71	65	66	63	57
24	8.0	33	70	35	17	52	74	68	62	69	61	57
25	9.1	32	247	17	75	51	71	72	69	62	58	14
26	7.5	27	100	27	96	52	66	70	68	67	60	6.8
27	7.4	23	64	88	96	56	64	70	63	74	46	15
28	5.8	24	80	49	99	49	66	72	63	71	63	20
29	5.5	28	115	22	103	36	66	71	62	68	61	14
30	6.8	25	113	17	------	33	67	69	60	67	61	41
31	12	------	74	14	------	37	------	71	------	65	66	------
TOTAL	317.9	1,327	2,311	1,112	1,065	2,000	1,853	1,817	1,911	1,908.4	2,043	1,673.8
MEAN	10.3	44.2	74.5	35.9	36.7	64.5	61.8	58.6	63.7	61.6	65.9	55.8
MAX	25	111	247	97	103	104	85	74	73	74	73	70
MIN	5.5	23	19	11	12	33	39	36	48	6.4	46	6.8
AC-FT	631	2,630	4,580	2,210	2,110	3,970	3,680	3,600	3,790	3,790	4,050	3,320

CAL YR 1971 TOTAL 14,632.5 MEAN 40.1 MAX 442 MIN 5.5 AC-FT 29,020
WTR YR 1972 TOTAL 19,339.1 MEAN 52.8 MAX 247 MIN 5.5 AC-FT 38,360

11180500 DRY CREEK AT UNION CITY, CALIF.

LOCATION.--Lat 37°36'22", long 122°01'22", in Arroyo de la Alameda Grant, Alameda County, on right bank 900 ft downstream from bridge on State Highway 238 in Decoto District in Union City, and 1.7 miles upstream from mouth.

DRAINAGE AREA.--9.41 sq mi.

PERIOD OF RECORD.--October 1916 to September 1919 (published as "near Decoto"), April 1959 to current year.

GAGE.--Water-stage recorder and concrete control. Datum of gage is 85.12 ft above mean sea level. Prior to Apr. 1, 1959, at site 1.4 miles downstream at different datum.

AVERAGE DISCHARGE.--16 years, 1.61 cfs (1,170 acre-ft per year); median of yearly mean discharges, 1.4 cfs (1,000 acre-ft per year).

EXTREMES.--Current year: Maximum discharge, 2.6 cfs Feb. 5 (gage height, 1.65 ft); no flow for several months. Period of record: Maximum discharge, 930 cfs Oct. 13, 1962 (gage height, 5.27 ft, from outside gage), from rating curve extended above 140 cfs on basis of slope-area measurement of maximum flow; no flow most of each year.

REMARKS.--Records good. No regulation or diversion above station.

REVISIONS (WATER YEARS).--WSP 1929: Drainage area. WRD Calif. 1969: 1962(M), 1963(P), 1965(P), 1967(P).

DISCHARGE, IN CUBIC FEET PER SECOND, WATER YEAR OCTOBER 1971 TO SEPTEMBER 1972

DAY	OCT	NOV	DEC	JAN	FEB	MAR	APR	MAY	JUN	JUL	AUG	SEP
1		0	0	0	0		0		0	0		0
2		0	.10	0	0		0		0	0		0
3		0	0	0	0		0		0	0		0
4		0	0	0	.02		0		0	0		0
5		0	0	0	1.2		0		0	0		0
6		0	0	0	1.0		.01		0	0		0
7		0	0	0	.64		0		0	0		0
8		0	0	0	.45		0		0	0		0
9		0	0	0	.33		0		.03	0		0
10		0	0	0	.22		0		0	.01		0
11		0	0	0	.13		0		0	0		0
12		0	0	0	.11		0		0	0		0
13		.02	0	0	.24		0		0	0		0
14		0	0	0	.20		0		0	0		0
15		0	0	0	.20		0		0	0		0
16		0	0	0	.15		0		0	0		0
17		0	0	0	.15		0		0	0		0
18		0	0	0	.15		0		0	0		0
19		0	0	0	.10		0		0	0		0
20		0	0	0	.10		0		0	0		0
21		0	.07	0	.10		0		0	0		0
22		0	.03	0	.10		0		0	0		0
23		0	0	.01	.05		0		0	0		0
24		0	.14	0	.05		.01		0	0		0
25		0	.77	0	.05		0		0	0		0
26		0	.25	0	.05		0		0	0		0
27		0	.08	.37	0		0		0	0		.02
28		.05	.02	.31	0		0		0	0		0
29		0	.01	.12	0		0		0	0		0
30		0	0	.03	------		0		0	0		0
31		------	0	0	------		------		------	0		------
TOTAL	0	.07	1.47	.84	5.79	0	.02	0	.03	.01	0	.02
MEAN	0	.002	.047	.027	.20	0	.0007	0	.001	.0003	0	.0007
MAX	0	.05	.77	.37	1.2	0	.01	0	.03	.01	0	.02
MIN	0	0	0	0	0	0	0	0	0	0	0	0
AC-FT	0	.1	2.9	1.7	11	0	.04	0	.06	.02	0	.04

CAL YR 1971 TOTAL 297.11 MEAN .81 MAX 15 MIN 0 AC-FT 589
WTR YR 1972 TOTAL 8.25 MEAN .023 MAX 1.2 MIN 0 AC-FT 16

PEAK DISCHARGE (BASE, 40 CFS).--No peak above base.

11180700 PATTERSON CREEK AT UNION CITY, CALIF.

LOCATION.--Lat 37°55'09", long 122°02'50", in Potrero de Los Cerritos Grant, Alameda County, on right bank 0.1 mile downstream from effluence from Alameda Creek, 0.2 mile upstream from bridge on State Highway 17 (Nimitz Freeway), and 2.0 miles southwest of Decoto District in Union City.

PERIOD OF RECORD.--October 1958 to current year.

GAGE.--Water-stage recorder. Datum of gage is 4.13 ft above mean sea level. Prior to Oct. 26, 1966, at site 0.2 mile downstream at same datum.

AVERAGE DISCHARGE.--14 years, 44.6 cfs (32,310 acre-ft per year).

EXTREMES.--Current year: Maximum discharge, 154 cfs Dec. 26 (gage height, 7.19 ft); no flow for many days. Period of record: Maximum discharge, 10,500 cfs Feb. 1, 1963 (gage height, 20.4 ft, from floodmarks); no flow at times in each year.

REMARKS.--Records fair. This stream is a distributary of Alameda Creek. See REMARKS for Alameda Creek at Union City.

DISCHARGE, IN CUBIC FEET PER SECOND, WATER YEAR OCTOBER 1971 TO SEPTEMBER 1972

DAY	OCT	NOV	DEC	JAN	FEB	MAR	APR	MAY	JUN	JUL	AUG	SEP
1	0	0	.11	.41	.33	.41	.11	.33	.11	0	21	.60
2	0	0	.18	.41	.33	.41	.11	.41	.11	.05	.71	.55
3	0	0	.11	.33	.33	.41	.18	.18	.11	.11	.41	.50
4	0	0	.11	.33	.33	.41	.18	.25	.11	.11	.36	.41
5	0	0	.11	.33	17	.33	.18	.25	.11	.01	.33	.41
6	0	0	.11	.41	20	.33	.25	.25	.11	0	.25	.41
7	0	0	.11	.41	.11	.25	.18	.25	.18	0	.25	.40
8	0	0	.11	.41	.11	.41	.11	.25	.18	0	.25	.41
9	0	0	.11	.41	.11	.41	.11	.18	.33	0	.25	.41
10	0	0	.11	.41	.11	.41	.11	.18	.41	0	.18	.41
11	0	0	.11	41	.05	.33	.18	.18	.25	0	.18	.41
12	13	0	.11	35	.05	.33	.18	.18	.18	0	.22	.33
13	48	0	.11	.71	.11	.33	.18	.18	.18	0	.18	.34
14	11	0	.11	.71	.11	.41	.18	.18	.18	0	.18	.41
15	.08	0	.11	.60	.11	.25	.18	.11	.11	0	.22	.41
16	0	0	.11	.60	.11	.33	.18	.11	.11	0	.27	.41
17	0	0	.11	.60	.05	.25	.18	.11	.11	0	.29	.46
18	0	0	.11	.60	.05	.25	.18	.11	.11	0	.33	.50
19	0	0	.11	.50	.11	.25	.18	.11	.05	0	.33	.50
20	0	.11	.11	.50	.18	.25	.25	.11	.05	.02	.38	.50
21	0	.50	.18	.50	.25	.25	.25	.11	.05	.02	.33	.50
22	0	.11	48	.50	.41	.33	.25	.11	.05	.05	.38	.50
23	0	.11	1.9	.41	.41	.33	.25	.05	.05	.05	.42	.50
24	0	.11	.71	.41	.41	.25	.25	.05	.05	.11	.41	.50
25	0	.11	104	.41	.50	.25	.25	.05	.05	.18	.30	.50
26	0	.11	139	.41	.50	.25	.25	.11	.02	.18	.34	.42
27	0	.11	78	25	.41	.25	.25	.11	.02	.25	.54	.50
28	0	.11	9.0	44	.41	.18	.25	.11	.02	.33	.50	.50
29	0	.11	.50	10	.41	.18	.25	.05	.02	.33	.36	.50
30	0	.11	.50	.50	------	.18	.25	.11	0	.33	.60	.50
31	0	------	.33	.41	------	.18	------	.11	------	.41	.56	------
TOTAL	72.08	1.60	384.39	167.23	43.40	9.39	5.89	4.88	3.42	2.54	31.31	13.70
MEAN	2.33	.053	12.4	5.39	1.50	.30	.20	.16	.11	.082	1.01	.46
MAX	48	.50	139	44	20	.41	.25	.41	.41	.41	21	.60
MIN	0	0	.11	.33	.05	.18	.11	.05	0	0	.18	.33
AC-FT	143	3.2	762	332	86	19	12	9.7	6.8	5.0	62	27

CAL YR 1971 TOTAL 6,379.87 MEAN 17.5 MAX 394 MIN 0 AC-FT 12,650
WTR YR 1972 TOTAL 739.83 MEAN 2.02 MAX 139 MIN 0 AC-FT 1,470

11180750 ALAMEDA CREEK AT UNION CITY, CALIF.

LOCATION.--Lat 37°35'46", long 122°03'15", in Arroyo de la Alameda Grant, Alameda County, on left bank 5 ft downstream from bridge on Baker Road, 1 mile downstream from Dry Creek, and 1.4 miles east of Alvarado District in Union City.

DRAINAGE AREA.--653 sq mi.

PERIOD OF RECORD.--October 1958 to current year.

GAGE.--Water-stage recorder. Datum of gage is 0.40 ft above mean sea level.

AVERAGE DISCHARGE.--8 years (1958-66), 2.10 cfs (1,520 acre-ft per year); 6 years (1966-72), 0.32 cfs (232 acre-ft per year).

EXTREMES.--Current year: Maximum discharge, 14 cfs Dec. 2 (gage height, 10.28 ft); no flow for many days.
Period of record: Maximum discharge, 1,770 cfs Feb. 1, 1963 (gage height, 19.25 ft, from floodmarks); no flow at times in each year.

REMARKS.--Records fair. Flow regulated by gates at Patterson Creek since October 1966. A storm drain flows into channel 0.5 mile upstream beginning in 1970. For total flow in Alameda Creek, add flow of Patterson Creek at Union City (see REMARKS for Alameda Creek near Niles). Diversion by Alameda County Water District to percolation ponds between stations near Niles and at Union City; additional percolation to ground water by placing check dams in channel during summer months.

DISCHARGE, IN CUBIC FEET PER SECOND, WATER YEAR OCTOBER 1971 TO SEPTEMBER 1972

DAY	OCT	NOV	DEC	JAN	FEB	MAR	APR	MAY	JUN	JUL	AUG	SEP
1	0	0	.01	.04	.11	.07	.46	.35	.21	0	.14	.17
2	0	.01	2.8	.06	.11	.16	.41	.36	.20	0	.21	.15
3	0	.01	1.3	.07	.10	.12	.42	.38	.17	0	.16	.13
4	0	.01	.56	.09	.85	.06	.42	.35	.12	0	.14	.13
5	.01	.01	.40	.27	2.5	.03	.80	.41	.08	0	.15	.11
6	.20	0	.47	.31	.01	.06	1.1	.35	.08	0	.15	.09
7	.20	0	.43	.26	.01	.15	.42	.33	.08	0	.19	.09
8	.14	0	.47	.20	.04	.21	.42	.40	.08	0	.18	.13
9	.20	0	.65	.14	.06	.21	.32	.43	.08	0	.18	.11
10	.17	0	.83	.20	.11	.24	.34	.30	.08	0	.17	.09
11	.14	.01	.43	.29	.03	.30	1.4	.14	.08	0	.19	.09
12	.14	.11	1.2	.29	.01	.29	.67	.12	.08	0	.20	.09
13	.06	1.1	.43	.26	0	.35	.45	.07	.08	0	.21	.11
14	.01	0	.46	.26	0	.38	.39	.15	.08	0	.21	.11
15	0	0	.48	.11	.01	.45	.38	.07	.08	0	.24	.11
16	0	.11	.47	.01	.01	.47	.42	.10	.05	0	.24	.09
17	0	.17	.52	.01	.01	.47	.36	.08	.05	0	.23	.09
18	0	.14	.49	.09	0	.48	.38	.10	.05	0	.25	.10
19	0	.11	.27	.09	0	.41	.41	.22	.05	0	.24	0
20	0	.09	.25	.11	0	.45	.45	.43	.05	0	.21	0
21	0	.06	1.7	.09	.01	.51	.44	.36	.05	0	.22	0
22	0	.11	2.3	.11	.46	.57	.39	.38	.05	0	.19	0
23	0	.14	.69	.70	.11	.54	.45	.38	.05	0	.22	0
24	0	.11	3.5	.11	.11	.58	1.8	.32	.05	.11	.24	0
25	0	.04	4.9	.75	.06	.60	.45	.31	.05	.03	.23	0
26	0	.14	.01	.70	.02	.48	.45	.32	0	.04	.24	.10
27	.01	.20	.96	2.4	0	.50	.42	.35	0	.09	.25	.53
28	.01	1.6	.04	.16	0	.53	.41	.29	0	.09	.24	0
29	.01	.54	.67	.02	.08	.50	.41	.27	0	.11	.22	0
30	.01	.03	.13	0	------	.52	.41	.25	0	.26	.21	0
31	0	------	.04	.04	------	.50	------	.23	------	.13	.16	------
TOTAL	1.31	4.85	27.86	8.24	4.82	11.19	16.05	8.60	2.08	.86	6.31	2.62
MEAN	.042	.16	.90	.27	.17	.36	.54	.28	.069	.028	.20	.087
MAX	.20	1.6	4.9	2.4	2.5	.60	1.8	.43	.21	.26	.25	.53
MIN	0	0	.01	0	0	.03	.32	.07	0	0	.14	0
AC-FT	2.6	9.6	55	16	9.6	22	32	17	4.1	1.7	13	5.2

CAL YR 1971 TOTAL 314.06 MEAN .86 MAX 6.7 MIN 0 AC-FT 623
WTR YR 1972 TOTAL 94.79 MEAN .26 MAX 4.9 MIN 0 AC-FT 188

11181000 SAN LORENZO CREEK AT HAYWARD, CALIF.

LOCATION.--Lat 37°41'11", long 122°03'44", in San Lorenzo Grant, Alameda County, on right bank at bridge on B Street, just outside city limits of Hayward, 0.5 mile downstream from Crow Creek, and 0.9 mile downstream from Don Castro Dam.

DRAINAGE AREA.--37.5 sq mi.

PERIOD OF RECORD.--October 1939 to September 1940, October 1946 to current year. Monthly discharge only for some periods, published in WSP 1315-B.

GAGE.--Water-stage recorder and concrete control (control ineffective since 1952 due to gravel fill). Datum of gage is 133.16 ft above mean sea level. January to September 1940, nonrecording gage on bridge at present site and datum.

AVERAGE DISCHARGE.--27 years, 14.0 cfs (10,140 acre-ft per year); median of yearly mean discharges, 9.0 cfs (6,500 acre-ft per year).

EXTREMES.--Current year: Maximum discharge, 47 cfs Feb. 5 (gage height, 5.53 ft); minimum daily, 0.01 cfs June 17, July 1, 2.
Period of record: Maximum discharge, 7,460 cfs Oct. 13, 1962 (gage height, 19.73 ft, from floodmarks), from rating curve extended above 2,700 cfs on basis of slope-area measurement of maximum flow; maximum gage height, 20.82 ft, from floodmarks, Dec. 22, 1955; no flow at times.

REMARKS.--Records good except those for period of no gage-height record, which are poor. Flow partly regulated by Cull Creek Reservoir beginning in October 1962 (capacity, 310 acre-ft) and Don Castro Reservoir 0.9 mile upstream beginning in January 1965 (capacity, 380 acre-ft). A few very small diversions above station.

REVISIONS (WATER YEARS).--WSP 1315-B: 1947(M), 1949(M). WSP 1345: 1940(M). WSP 1715: 1947.

DISCHARGE, IN CUBIC FEET PER SECOND, WATER YEAR OCTOBER 1971 TO SEPTEMBER 1972

DAY	OCT	NOV	DEC	JAN	FEB	MAR	APR	MAY	JUN	JUL	AUG	SEP
1	.10	4.0	.51	1.0	.88	1.1	.53	.29	.09	.01	.07	.03
2	.10	4.0	5.4	1.0	.88	1.2	.51	.28	.09	.01	.06	.03
3	.10	4.0	1.8	.66	.78	1.1	.52	.21	.09	.02	.06	.03
4	.10	4.0	1.1	.66	1.7	1.1	.52	.18	.08	.03	.05	.03
5	.10	4.7	.68	.66	21	1.0	1.9	.31	.08	.02	.07	.04
6	.10	4.7	.89	.75	7.2	.96	2.4	.48	.09	.03	.05	.04
7	.10	4.7	2.6	.76	2.9	.89	.86	.49	.10	.05	.05	.04
8	.10	4.7	.57	.75	1.9	.94	.56	.51	.10	.04	.06	.04
9	.10	3.7	1.4	.72	1.7	1.0	.51	.55	.41	.04	.07	.03
10	.10	3.5	.85	.66	1.7	.98	.51	.46	.09	.08	.07	.05
11	.10	3.7	.49	.67	1.4	.92	1.4	.34	.04	.10	.05	1.0
12	.10	3.6	3.2	.72	1.3	.94	1.5	.28	.03	.06	.06	2.4
13	.10	7.8	1.7	.76	1.1	.93	.91	.31	.03	.04	.05	4.7
14	.10	4.6	.86	.71	1.1	.89	.46	.22	.02	.03	.06	4.6
15	.10	4.1	.49	.66	1.0	.84	.25	.11	.03	.04	.05	1.1
16	.10	14	.42	.66	1.0	.71	.32	.10	.03	.04	.04	.78
17	.10	22	.49	.66	1.0	.68	.31	.13	.01	.05	.03	.78
18	.10	21	.42	.68	1.0	.69	.31	.13	.02	.06	.04	.71
19	.10	18	.42	.88	1.0	.72	.27	.16	.02	.05	.06	.75
20	.10	14	.49	2.8	1.0	.63	.19	.15	.03	.06	.04	.70
21	.10	13	.66	.59	1.1	.77	.22	.12	.04	.07	.04	.66
22	1.0	5.5	.66	.71	3.6	1.3	.23	.13	.04	.05	.03	.61
23	4.0	7.4	.66	2.4	1.7	.93	.18	.14	.04	.05	.04	.54
24	4.0	3.8	2.2	.81	1.4	.68	.69	.14	.04	.06	.04	.49
25	4.0	.27	10	2.7	1.3	.68	.29	.10	.02	.05	.04	.47
26	4.0	.97	2.1	2.1	1.1	.63	.16	.09	.02	.05	.04	9.0
27	4.0	.72	8.4	7.8	1.1	.60	.12	.11	.04	.05	.04	3.0
28	4.0	2.8	1.9	2.0	1.1	.60	.09	.09	.04	.06	.04	.80
29	4.0	.94	2.1	1.3	1.5	.59	.17	.08	.03	.05	.05	.40
30	4.0	1.3	1.5	1.0	------	.59	.34	.10	.03	.08	.04	.20
31	4.0	------	1.3	1.0	------	.57	------	.11	------	.10	.04	------
TOTAL	39.10	191.50	56.26	39.23	65.44	26.16	17.23	6.90	1.82	1.54	1.53	34.05
MEAN	1.26	6.38	1.81	1.27	2.26	.84	.57	.22	.061	.050	.049	1.14
MAX	4.0	22	10	7.8	21	1.3	2.4	.55	.41	.10	.07	9.0
MIN	.10	.27	.42	.59	.78	.57	.09	.08	.01	.01	.03	.03
AC-FT	78	380	112	78	130	52	34	14	3.6	3.1	3.0	68

CAL YR 1971 TOTAL 2,478.57 MEAN 6.79 MAX 106 MIN .03 AC-FT 4,920
WTR YR 1972 TOTAL 480.76 MEAN 1.31 MAX 22 MIN .01 AC-FT 954

PEAK DISCHARGE (BASE, 350 CFS).--No peak above base.

NOTE.--No gage-height record Oct. 1 to Nov. 5.

11181008 CASTRO VALLEY CREEK AT HAYWARD, CALIF.

LOCATION.--Lat 37°40'48", long 122°04'46", in San Lorenzo (Castro) Grant, Alameda County, on left bank at Hayward 700 ft upstream from mouth, and 700 ft downstream from small left-bank tributary.

DRAINAGE AREA.--5.51 sq mi.

PERIOD OF RECORD.--October 1971 to September 1972.

GAGE.--Water-stage recorder and crest-stage gage. Altitude of gage is 100 ft (from topographic map).

EXTREMES.--Current year: Maximum discharge, 267 cfs Dec. 22 (gage height, 3.93 ft), from rating curve extended above 53 cfs on basis of slope-area measurements at gage heights 3.92 and 6.02 ft; minimum daily, 0.10 cfs Oct. 1-3, 11, 15-20.

REMARKS.--Records fair. No regulation or diversion above station. Records of chemical analyses and suspended-sediment discharge for the current year are published in Part 2 of this report.

DISCHARGE, IN CUBIC FEET PER SECOND, WATER YEAR OCTOBER 1971 TO SEPTEMBER 1972

DAY	OCT	NOV	DEC	JAN	FEB	MAR	APR	MAY	JUN	JUL	AUG	SEP
1	.10	.20	.39	1.0	.70	.50	.45	.50	.42	.63	.39	.32
2	.10	.20	22	1.1	.61	1.0	.53	.52	.42	.46	.35	.27
3	.10	.20	4.5	1.1	.68	.54	.44	.46	.39	.63	.29	.26
4	.20	.20	.63	1.0	6.1	.58	.46	.32	.54	.46	.35	.30
5	.15	.20	.42	.80	36	.68	12	.32	.50	.46	.42	.22
6	.15	.20	.58	.58	2.2	.58	9.7	.32	.39	.58	.46	.27
7	.15	.20	.32	.62	1.4	.54	.52	.46	.32	.50	.35	.30
8	.20	.30	.27	.63	1.1	.50	.61	.53	.27	.50	.29	.25
9	.40	.25	1.9	.58	1.0	.50	.62	.31	9.3	.54	.32	.27
10	.15	.20	2.3	.54	1.1	.50	.73	.35	.42	.54	.29	.26
11	.10	.70	.29	.54	1.2	.58	.73	.40	.42	.46	.39	.18
12	.15	2.5	14	.55	.84	.54	.63	.51	.50	.58	.32	.24
13	.25	9.0	.58	.55	.82	.54	.54	.60	.42	.68	.32	.23
14	.45	.19	.97	.55	.76	.54	.50	.58	.63	1.0	.32	.25
15	.10	.15	.42	.61	.72	.58	.54	.43	.54	.68	.35	.25
16	.10	.22	.39	.58	.72	.68	.52	.36	.39	.46	.29	.27
17	.10	.27	.39	.53	.72	.63	.44	.35	.58	.46	.39	.28
18	.10	.32	.42	.50	.74	.63	.42	.34	.50	.35	.29	.17
19	.10	.24	.46	.51	.70	.58	.41	.29	.46	.35	.26	.24
20	.10	.29	.42	.51	.68	.54	.45	.35	.39	.27	.37	.24
21	.15	.24	17	.60	2.0	.50	.49	.42	.46	.39	.39	.23
22	.15	.22	19	1.3	10	2.6	.56	.39	.39	.39	.33	.23
23	.30	.24	3.4	9.9	3.3	.78	.56	.32	.42	.42	.30	.27
24	.30	.24	38	.58	.68	.78	8.9	.39	.46	.39	.28	.25
25	.30	.22	41	9.8	.54	.89	.43	.32	.54	.39	.31	.49
26	.25	5.9	3.2	4.2	.63	.85	.52	.39	.50	.39	.33	14
27	.25	.58	18	23	.68	.85	.49	.46	.50	.42	.32	5.8
28	.25	21	1.3	1.3	.96	.90	.38	.50	.54	.42	.28	.36
29	.25	1.3	3.2	.94	1.6	.92	.64	.58	.54	.39	.26	.24
30	.25	.42	1.0	.83	------	1.0	1.1	.35	.73	.39	.33	.22
31	.30	------	1.0	.74	------	.57	------	.54	------	.46	.34	------
TOTAL	6.00	46.39	197.75	66.57	79.18	22.40	45.31	12.96	22.88	15.04	10.28	27.16
MEAN	.19	1.55	6.38	2.15	2.73	.72	1.51	.42	.76	.49	.33	.91
MAX	.45	21	41	23	36	2.6	12	.60	9.3	1.0	.46	14
MIN	.10	.15	.27	.50	.54	.50	.38	.29	.27	.27	.26	.17
AC-FT	12	92	392	132	157	44	90	26	45	30	20	54

WTR YR 1972 TOTAL 551.92 MEAN 1.51 MAX 41 MIN .10 AC-FT 1,090

PEAK DISCHARGE (BASE, 400 CFS).--No peak above base.

11181040 SAN LORENZO CREEK AT SAN LORENZO, CALIF.

LOCATION.--Lat 37°41'03", long 122°08'20", in San Lorenzo (Soto) Grant, Alameda County, on left bank 400 ft downstream from Washington Avenue bridge in San Lorenzo, and 1.6 miles upstream from mouth.

DRAINAGE AREA.--44.6 sq mi.

PERIOD OF RECORD.--October 1967 to current year.

GAGE.--Water-stage recorder and crest-stage gage. Datum of gage is 6.13 ft above mean sea level (levels by Alameda County Flood Control and Water Conservation District).

AVERAGE DISCHARGE.--5 years, 18.3 cfs (13,260 acre-ft per year).

EXTREMES.--Current year: Maximum discharge, 300 cfs Dec. 22 (gage height, unknown); minimum daily, 0.30 cfs June 22, 23.
Period of record: Maximum discharge, 3,300 cfs Jan. 21, 1970 (gage height, 7.67 ft, from crest-stage gage), from rating curve extended above 1,200 cfs; minimum daily, 0.05 cfs Oct. 23, 1968.

REMARKS.--Records fair. Flow partly regulated by Cull Creek Reservoir beginning in October 1962 (capacity, 310 acre-ft), and Don Castro Reservoir 7 miles upstream beginning in January 1965 (capacity, 380 acre-ft). A few very small diversions above station.

DISCHARGE, IN CUBIC FEET PER SECOND, WATER YEAR OCTOBER 1971 TO SEPTEMBER 1972

DAY	OCT	NOV	DEC	JAN	FEB	MAR	APR	MAY	JUN	JUL	AUG	SEP
1	.97	5.0	1.6	2.2	2.2	2.1	1.1	1.1	.51	.73	.45	.54
2	1.1	4.7	32	2.0	1.8	3.2	1.2	1.1	.58	.76	.45	.49
3	1.2	4.6	15	2.0	1.7	2.1	1.2	1.1	.51	.82	.59	.52
4	1.7	4.9	2.9	1.7	13	2.2	1.3	.99	.64	.71	.71	.51
5	1.6	4.7	2.0	1.7	65	1.9	17	.96	.72	.70	.86	.57
6	1.6	4.6	2.0	1.7	20	2.3	14	.95	.73	.67	1.0	.61
7	1.7	4.6	3.6	1.7	6.5	3.1	2.5	1.2	.66	.31	1.2	.51
8	1.9	6.2	2.0	1.7	4.3	3.2	1.8	1.5	.62	.83	1.1	.59
9	2.1	4.6	3.8	1.7	3.7	2.4	1.6	1.1	15	.65	1.2	.52
10	1.7	4.6	4.0	1.6	3.5	1.8	1.6	1.3	2.4	.68	1.0	.54
11	1.6	6.7	2.2	1.6	2.8	1.7	3.2	1.3	.62	.83	1.1	.62
12	1.7	8.6	18	1.7	2.4	1.7	4.9	1.3	.59	.94	1.1	6.7
13	1.8	39	5.0	1.7	2.0	1.7	4.0	1.3	.41	.92	1.1	8.7
14	1.6	8.5	4.2	1.6	2.2	1.7	2.0	1.2	.53	1.1	1.0	13
15	1.5	4.6	3.1	1.6	2.3	1.7	1.2	.98	.58	1.1	.87	4.5
16	1.4	11	2.5	1.6	2.3	1.5	1.5	.81	.61	1.3	.66	3.2
17	1.5	23	2.5	1.6	2.2	1.5	.89	.74	.69	1.7	.77	3.2
18	1.5	21	2.5	1.6	2.2	1.6	.69	.61	.84	2.1	1.1	3.2
19	1.4	20	2.3	1.6	2.1	1.5	.77	.55	.81	2.4	1.1	3.2
20	1.4	17	2.0	5.5	2.0	1.5	.76	.47	.79	2.6	1.1	3.2
21	1.7	17	25	1.8	2.4	1.5	.85	.46	.63	.92	1.1	3.5
22	1.7	8.2	30	2.9	23	3.8	1.1	.44	.30	.51	.67	3.7
23	5.7	6.8	4.0	20	8.8	1.7	1.2	.40	.30	.43	.56	3.6
24	5.6	8.0	65	2.8	3.1	1.2	16	.43	.31	.42	.38	3.6
25	5.3	1.3	70	20	2.5	1.2	1.5	.47	.41	.42	.47	3.4
26	5.3	2.2	8.0	9.5	2.3	1.1	.56	.52	.40	.46	.51	26
27	5.3	2.8	25	26	2.2	1.2	.99	.62	.42	.43	.48	18
28	5.2	11	4.0	7.0	2.4	1.1	.96	.65	.47	.58	.51	3.7
29	5.0	4.9	6.0	3.2	5.2	1.2	.97	.68	.48	.55	.41	1.5
30	4.9	1.9	3.5	2.5	------	1.3	1.1	.58	.67	.55	.47	.73
31	5.9	------	3.0	2.3	------	1.1	------	.61	------	.50	.51	------
TOTAL	82.57	272.0	356.7	136.1	196.1	56.8	88.44	26.42	33.23	27.62	24.53	122.65
MEAN	2.66	9.07	11.5	4.39	6.76	1.83	2.95	.85	1.11	.89	.79	4.09
MAX	5.9	39	70	26	65	3.8	17	1.5	15	2.6	1.2	26
MIN	.97	1.3	1.6	1.6	1.7	1.1	.56	.40	.30	.31	.38	.49
AC-FT	164	540	708	270	389	113	175	52	66	55	49	243

CAL YR 1971 TOTAL 3,725.08 MEAN 10.2 MAX 317 MIN .46 AC-FT 7,390
WTR YR 1972 TOTAL 1,423.16 MEAN 3.89 MAX 70 MIN .30 AC-FT 2,820

PEAK DISCHARGE (BASE, 850 CFS).--No peak above base.

NOTE.--No gage-height record Dec. 21 to Jan. 3.

11181400 WILDCAT CREEK AT RICHMOND, CALIF.

LOCATION.--Lat 37°57'41", long 122°21'33", in San Pablo Grant, Contra Costa County, on left bank 200 ft downstream from Southern Pacific Railway bridge at east city limits of Richmond, and 2 miles upstream from mouth.

DRAINAGE AREA.--8.69 sq mi.

PERIOD OF RECORD.--July 1964 to current year.

GAGE.--Water-stage recorder. Datum of gage is 20.62 ft above mean sea level.

AVERAGE DISCHARGE.--8 years, 4.56 cfs (3,310 acre-ft per year).

EXTREMES.--Current year: Maximum discharge, 77 cfs Jan. 27 (gage height, 4.24 ft); no flow many days.
Period of record: Maximum discharge, 881 cfs Jan. 21, 1970 (gage height, 9.90 ft); no flow many days in each year.

REMARKS.--Records good. Minor storage in Lake Anza and Jewel Lake. No diversion above station.

DISCHARGE, IN CUBIC FEET PER SECOND, WATER YEAR OCTOBER 1971 TO SEPTEMBER 1972

DAY	OCT	NOV	DEC	JAN	FEB	MAR	APR	MAY	JUN	JUL	AUG	SEP
1	0	0	.57	.49	.34	.20	0		0			0
2	0	0	13	.32	.24	.13	0		0			0
3	0	0	3.9	.21	.17	.24	0		0			0
4	0	0	1.2	.02	2.0	.32	0		0			0
5	0	0	.65	0	26	.19	2.6		0			0
6	0	0	.91	0	4.1	.11	1.1		.10			0
7	0	0	.66	0	.86	.01	.27		0			0
8	0	0	1.1	0	.86	0	0		0			0
9	0	12	.92	0	.47	.12	0		1.1			0
10	0	28	3.0	0	.31	.16	0		0			0
11	0	13	.95	0	.28	.02	4.0		0			0
12	0	11	17	0	.22	0	2.9		0			0
13	0	16	.92	0	.19	0	.77		0			0
14	0	.71	2.1	0	.17	0	.12		0			0
15	0	.60	1.3	0	.15	0	.01		0			0
16	0	.81	.95	0	.13	0	.38		0			0
17	0	.39	.83	0	.13	0	0		0			0
18	0	.72	.87	0	.11	0	0		0			0
19	0	.03	1.1	0	.07	0	0		0			0
20	0	1.9	1.2	0	.09	0	0		0			0
21	0	.54	3.5	0	.28	0	0		0			0
22	0	.86	12	.11	.52	.34	0		0			0
23	0	.43	1.7	1.3	.93	.12	0		0			0
24	0	.70	15	.17	.57	0	3.4		0			0
25	0	.51	27	2.2	.31	0	0		0			.03
26	2.5	.17	6.2	2.0	.17	0	0		0			.41
27	4.1	.12	2.7	9.8	.13	0	0		0			5.1
28	.33	3.6	9.8	.91	.25	0	0		0			.12
29	0	.60	1.3	.69	.29	0	0		0			0
30	0	.59	.62	.53	------	0	0		0			0
31	0	------	.62	.40	------	0	------		------			------
TOTAL	6.93	93.08	133.57	19.15	40.34	1.96	15.55	0	1.20	0	0	5.66
MEAN	.22	3.10	4.31	.62	1.39	.063	.52	0	.040	0	0	.19
MAX	4.1	28	27	9.8	26	.34	4.0	0	1.1	0	0	5.1
MIN	0	0	.57	0	.07	0	0	0	0	0	0	0
AC-FT	14	185	265	38	80	3.9	31	0	2.4	0	0	11

CAL YR 1971 TOTAL 688.03 MEAN 1.89 MAX 47 MIN 0 AC-FT 1,360
WTR YR 1972 TOTAL 317.44 MEAN .87 MAX 28 MIN 0 AC-FT 630

PEAK DISCHARGE (BASE, 150 CFS).--No peak above base.

11182030 RHEEM CREEK AT SAN PABLO, CALIF.

LOCATION.--Lat 37°58'38", long 122°21'10", in San Pablo Grant, Contra Costa County, on left bank 50 ft downstream from Santa Fe Railway bridge at San Pablo, and 0.7 mile upstream from mouth.

DRAINAGE AREA.--1.49 sq mi (revised).

PERIOD OF RECORD.--December 1960 to current year.

GAGE.--Water-stage recorder. Datum of gage is 13.63 ft above mean sea level (Corps of Engineers bench mark). Prior to Aug. 13, 1965, at site 0.2 mile upstream at datum 7.74 ft higher.

AVERAGE DISCHARGE.--11 years (1961-72), 1.33 cfs (964 acre-ft per year); median of yearly mean discharges, 1.1 cfs (800 acre-ft per year).

EXTREMES.--Current year: Maximum discharge, 158 cfs Jan. 26 (gage height, 4.56 ft); minimum daily, 0.01 cfs Oct. 11, 17, 18.
Period of record: Maximum discharge, 477 cfs Dec. 20, 1969 (gage height, 6.95 ft), from rating curve extended above 150 cfs; no flow at times.

REMARKS.--Records good. Low flow affected by return flow from industrial waste, leakage, and infrequent releases from off-stream North Reservoir.

DISCHARGE, IN CUBIC FEET PER SECOND, WATER YEAR OCTOBER 1971 TO SEPTEMBER 1972

DAY	OCT	NOV	DEC	JAN	FEB	MAR	APR	MAY	JUN	JUL	AUG	SEP
1	.04	.07	.08	.63	.06	.06	.07	.13	.11	.23	.07	.07
2	.04	.06	8.2	.17	.06	.06	.08	.20	.12	.14	.13	.05
3	.02	.08	4.9	.14	.08	.20	.11	.24	.07	.20	.14	.06
4	.04	.07	.29	.14	3.2	.03	.07	.15	.11	.18	.07	.06
5	.10	.09	.06	.12	22	.03	4.4	.16	.20	.16	.04	.09
6	.17	.18	.06	.12	.72	.04	.68	.17	.15	.13	.08	.13
7	.06	.05	.08	.10	.17	.03	.08	.20	.11	.16	.08	.11
8	.11	.06	.06	.06	.14	.04	.09	.22	.09	.38	.08	.08
9	.22	.06	1.0	.06	.14	.39	.09	.18	2.3	.25	.08	.06
10	.04	.07	2.2	.04	.10	.14	.10	.22	.15	.22	.08	.05
11	.01	7.2	.14	.03	.08	.02	6.0	.22	.09	.23	.13	.07
12	.06	6.9	12	.08	.08	.03	3.3	.20	.17	.30	.14	.05
13	.08	10	.81	.06	.08	.04	.12	.14	.14	.57	.09	.07
14	.12	.20	.24	.06	.06	.06	.08	.11	.11	.60	.08	.09
15	.04	.08	.24	.03	.08	.09	.05	.10	.12	.28	.07	.08
16	.02	.08	.14	.03	.08	.12	.05	.10	.12	.18	.11	.08
17	.01	.10	.12	.02	.08	.10	.08	.08	.14	.21	.16	.05
18	.01	.08	.10	.03	.08	.08	.07	.29	.13	.15	.10	.08
19	.03	.10	.10	.02	.06	.08	.06	.12	.13	.16	.09	.08
20	.07	.04	.10	.02	.06	.08	.10	.06	.12	.23	.07	.16
21	.04	.02	1.3	.03	.74	.10	.20	.09	.20	.40	.09	.20
22	.03	.06	12	.68	.63	.55	.13	.12	.13	.23	.13	.10
23	.26	.12	2.1	.72	1.1	.11	.11	.12	.26	.15	.25	.07
24	.05	.08	11	.02	.65	.08	6.1	.12	.15	.13	.12	.05
25	.03	.02	19	1.4	.12	.07	.19	.12	.19	.11	.10	.58
26	.04	.03	5.9	2.5	.06	.05	.13	.13	.23	.11	.07	1.7
27	.06	.08	4.6	13	.03	.07	.18	.08	.17	.13	.04	2.8
28	.07	2.2	2.1	.17	.35	.07	.12	.08	.17	.12	.07	.09
29	.03	.10	1.6	.08	.12	.07	.07	.10	.31	.11	.11	.07
30	.22	.08	1.0	.06	------	.14	.09	.10	.27	.10	.08	.06
31	.04	------	.81	.08	------	.94	------	.10	------	.11	.07	------
TOTAL	2.16	28.36	92.33	20.70	31.41	3.97	23.00	4.45	6.76	6.66	3.02	7.29
MEAN	.070	.95	2.98	.67	1.08	.13	.77	.14	.23	.21	.097	.24
MAX	.26	10	19	13	22	.94	6.1	.29	2.3	.60	.25	2.8
MIN	.01	.02	.06	.02	.03	.02	.05	.06	.07	.10	.04	.05
AC-FT	4.3	56	183	41	62	7.9	46	8.8	13	13	6.0	14

CAL YR 1971 TOTAL 251.39 MEAN .69 MAX 19 MIN .01 AC-FT 499
WTR YR 1972 TOTAL 230.11 MEAN .63 MAX 22 MIN .01 AC-FT 456

PEAK DISCHARGE (BASE, 150 CFS).--Jan. 26 (0545) 158 cfs (4.56 ft).

11182100 PINOLE CREEK AT PINOLE, CALIF.

LOCATION.--Lat 37°58'21", long 122°14'43", in Pinole Grant, Contra Costa County, on left bank 0.2 mile downstream from county bridge on Pinole Valley Road, 0.8 mile upstream from Pinole city boundary.

DRAINAGE AREA.--10.0 sq mi.

PERIOD OF RECORD.--December 1938 to current year. Monthly discharge only for water years 1939-59, published in WSP 1735.

GAGE.--Water-stage recorder and concrete control. Altitude of gage is 170 ft (from topographic map).

AVERAGE DISCHARGE.--33 years (1939-72), 3.71 cfs (2,690 acre-ft per year); median of yearly mean discharges, 2.1 cfs (1,500 acre-ft per year).

EXTREMES.--Current year: Maximum discharge, 16 cfs Feb. 5 (gage height, 2.14 ft); no flow for many days.
Period of record: Maximum discharge, 1,660 cfs Apr. 2, 1958 (gage height, 11.63 ft); no flow at times.

REMARKS.--No storage or diversion above station except for minor stock ponds; some inflow from ground-water withdrawals during irrigation season.

COOPERATION.--Records furnished by East Bay Municipal Utility District and reviewed by Geological Survey.

REVISIONS.--Revised figures of discharge, in cubic feet per second, for the water year 1970, superseding figures published in WRD Calif. 1970, are given below:

Dec. 19, 1969..... 2.1
20..... 36

MONTH	CFS-DAYS	MAX	MIN	MEAN	AC-FT
December 1969	173.05	68	0.24	5.58	343
CAL YR 1969	3,398.55	199	.06	9.31	6,740
WTR YR 1970	2,557.78	396	.07	7.01	5,070

DISCHARGE, IN CUBIC FEET PER SECOND, WATER YEAR OCTOBER 1971 TO SEPTEMBER 1972

DAY	OCT	NOV	DEC	JAN	FEB	MAR	APR	MAY	JUN	JUL	AUG	SEP
1	.12	.15	.53	.44	.38	.39	.38	.11				
2	.13	.15	.99	.44	.37	.39	.44	.08				
3	.17	.14	.70	.44	.35	.42	.46	.07				
4	.23	.12	.63	.42	.45	.39	.54	.08				
5	.14	.14	.58	.42	7.5	.37	.76	.14				
6	.07	.12	.55	.42	1.8	.37	.84	.17				
7	.04	.12	.53	.42	.75	.35	.60	.15				
8	.06	.15	.51	.42	.55	.35	.55	.14				
9	.07	.16	.53	.39	.51	.35	.55	.13				
10	.12	.14	.55	.39	.46	.35	.53	.12				
11	.14	.23	.58	.39	.44	.35	.76	.08				
12	.19	.37	.69	.39	.42	.35	.75	.05				
13	.17	.51	.66	.39	.44	.35	.68	.04				
14	.15	.34	.58	.39	.48	.33	.33	.03				
15	.15	.25	.55	.39	.48	.33	.29	.01				
16	.19	.19	.55	.39	.48	.31	.27	0				
17	.25	.17	.53	.39	.48	.31	.27	0				
18	.25	.19	.55	.42	.45	.31	.25	0				
19	.23	.16	.53	.44	.35	.29	.21	0				
20	.21	.25	.53	.42	.35	.29	.21	.02				
21	.27	.51	.58	.42	.37	.29	.23	.02				
22	.29	.60	1.7	.44	.70	.40	.23	.02				
23	.33	.58	1.3	.48	.46	.31	.21	.02				
24	.29	.51	1.7	.35	.46	.29	.37	.01				
25	.33	.48	3.5	.42	.46	.27	.31	.01				
26	.29	.48	1.0	.43	.44	.25	.29	.01				
27	.25	.51	.90	2.1	.42	.25	.29	.01				
28	.17	.53	.72	.72	.42	.25	.27	.01				
29	.13	.55	.51	.46	.46	.25	.27	.01				
30	.14	.53	.48	.39	------	.25	.22	.01				
31	.16	------	.46	.37	------	.23	------	0	------			------
TOTAL	5.73	9.33	24.70	14.79	21.68	9.99	12.36	1.55	0	0	0	0
MEAN	.18	.31	.80	.48	.75	.32	.41	.050	0	0	0	0
MAX	.33	.60	3.5	2.1	7.5	.42	.84	.17	0	0	0	0
MIN	.04	.12	.46	.35	.35	.23	.21	0	0	0	0	0
AC-FT	11	19	49	29	43	20	25	3.1	0	0	0	0

CAL YR 1971 TOTAL 683.28 MEAN 1.87 MAX 54 MIN .02 AC-FT 1,360
WTR YR 1972 TOTAL 100.13 MEAN .27 MAX 7.5 MIN 0 AC-FT 199

PEAK DISCHARGE (BASE, 200 CFS).--No peak above base.

11182400 ARROYO DEL HAMBRE AT MARTINEZ, CALIF.

LOCATION.--Lat 38°00'12", long 122°07'44", in Las Juntas Grant, Contra Costa County, on right bank 40 ft upstream from D Street Bridge in Martinez.

DRAINAGE AREA.--15.1 sq mi.

PERIOD OF RECORD.--October 1964 to current year.

GAGE.--Water-stage recorder and concrete control. Datum of gage is 48.33 ft above mean sea level (levels by Contra Costa County Flood Control District).

AVERAGE DISCHARGE.--8 years, 4.04 cfs (2,930 acre-ft per year).

EXTREMES.--Current year: Maximum discharge, 41 cfs Jan. 27 (gage height, 2.71 ft); no flow for several days. Period of record: Maximum discharge, 1,640 cfs Jan. 26, 1969 (gage height, 9.62 ft), from rating curve extended above 540 cfs on basis of slope-area measurement of maximum flow; no flow at times.

REMARKS.--Records good. No regulation or diversion above station.

REVISIONS (WATER YEARS).--WRD Calif. 1969: 1967(M).

DISCHARGE, IN CUBIC FEET PER SECOND, WATER YEAR OCTOBER 1971 TO SEPTEMBER 1972

DAY	OCT	NOV	DEC	JAN	FEB	MAR	APR	MAY	JUN	JUL	AUG	SEP
1	.05	.05	.03	.60	.51	.35	.28	.22	.02	.03	.02	.07
2	.07	.05	3.8	.53	.45	.33	.29	.23	.03	.01	.02	0
3	.07	.03	.74	.53	.85	.45	.25	.23	.03	.03	.03	0
4	.05	.03	.20	.53	3.1	.46	.37	.23	.03	.03	.04	0
5	.05	.03	.12	.48	20	.39	1.0	.23	.04	.05	.05	0
6	.07	.03	.14	.47	2.0	.40	.34	.23	.05	.04	.05	0
7	.03	.05	.18	.53	1.2	.29	.14	.23	.05	.05	.04	0
8	.03	.05	.15	.53	.85	.24	.14	.23	.05	.04	.05	0
9	.01	.05	.23	.46	.53	.31	.10	.23	.39	.05	.06	0
10	.01	.05	.76	.46	.53	.34	.11	.23	.09	.07	.11	0
11	.02	.76	.28	.46	.53	.26	.73	.19	.05	.10	.05	.01
12	.01	.33	1.4	.46	.60	.29	.19	.19	.05	.07	.06	.02
13	.02	1.3	.33	.46	.67	.23	.15	.09	.03	.09	.06	.03
14	.03	.05	.23	.46	.72	.26	.15	.09	.03	.07	.08	.02
15	.03	.02	.28	.46	.60	.22	.15	.09	.03	.07	.10	.04
16	.03	.02	.23	.46	.46	.22	.12	.12	.03	.13	.10	.04
17	.03	.03	.23	.46	.53	.24	.12	.13	.05	.12	.13	.04
18	.05	.03	.23	.46	.48	.23	.12	.13	.05	.10	.17	.06
19	.05	.05	.23	.46	.52	.23	.10	.14	.05	.10	.03	.06
20	.05	.05	.28	.46	.53	.19	.10	.13	.05	.12	0	.07
21	.05	.05	1.4	.53	.71	.20	.10	.14	.07	.07	.01	.07
22	.05	.05	6.0	.67	1.8	1.2	.12	.13	.07	.06	0	.01
23	.05	.05	1.7	1.4	1.0	.26	.12	.15	.03	.05	0	.02
24	.05	.05	5.5	.46	.88	.20	.15	.13	.02	.05	.01	.03
25	.05	.07	13	1.7	.68	.19	.15	.11	.02	.06	.01	.12
26	.05	.07	2.2	1.3	.58	.18	.20	.10	.03	.01	.01	.49
27	.05	.07	2.3	6.0	.40	.15	.20	.09	.03	.01	.02	.05
28	.03	.28	1.2	.34	.43	.22	.25	.09	.03	.01	.04	.03
29	.05	.05	1.2	.35	.55	.24	.25	.11	.03	0	.05	.02
30	.05	.03	.67	.53	------	.24	.22	.07	.02	.01	.07	.02
31	.05	------	.67	.54	------	.27	------	.02	------	.01	.09	------
TOTAL	1.29	3.83	45.91	23.54	42.69	9.28	6.71	4.73	1.55	1.71	1.56	1.32
MEAN	.042	.13	1.48	.76	1.47	.30	.22	.15	.052	.055	.050	.044
MAX	.07	1.3	13	6.0	20	1.2	1.0	.23	.39	.13	.17	.49
MIN	.01	.02	.03	.34	.40	.15	.10	.02	.02	0	0	0
AC-FT	2.6	7.6	91	47	85	18	13	9.4	3.1	3.4	3.1	2.6

CAL YR 1971 TOTAL 740.07 MEAN 2.03 MAX 42 MIN .01 AC-FT 1,470
WTR YR 1972 TOTAL 144.12 MEAN .39 MAX 20 MIN 0 AC-FT 286

PEAK DISCHARGE (BASE, 150 CFS).--No peak above base.

11182500 SAN RAMON CREEK AT SAN RAMON, CALIF.

LOCATION.--Lat 37°46'23", long 121°59'37", in sec.8, T.2 S., R.1 W., Contra Costa County, on right bank 0.2 mile downstream from Bollinger Creek, and 1.0 mile southwest of San Ramon.

DRAINAGE AREA.--5.89 sq mi.

PERIOD OF RECORD.--October 1952 to current year.

GAGE.--Water-stage recorder and concrete control. Altitude of gage is 530 ft (from topographic map).

AVERAGE DISCHARGE.--20 years, 2.74 cfs (1,990 acre-ft per year); median of yearly mean discharges, 1.5 cfs 1,100 acre-ft per year).

EXTREMES.--Current year: Maximum discharge, 22 cfs Feb. 5 (gage height, 2.37 ft); no flow for many days.
Period of record: Maximum discharge, 1,600 cfs Oct. 13, 1962 (gage height, 16.98 ft), from rating curve extended above 90 cfs on basis of indirect measurements of maximum flow through culvert at gage heights 12.09 and 16.98 ft; no flow for parts of each year.

REMARKS.--Records good. No regulation or diversion above station.

REVISIONS (WATER YEARS).--WSP 1445: 1953-54(P).

DISCHARGE, IN CUBIC FEET PER SECOND, WATER YEAR OCTOBER 1971 TO SEPTEMBER 1972

DAY	OCT	NOV	DEC	JAN	FEB	MAR	APR	MAY	JUN	JUL	AUG	SEP
1	.01	.02	.14	.26	.28	.42	.21	.12	0			
2	.01	.02	.49	.25	.25	.44	.21	.10	.01			
3	.01	.02	.23	.26	.25	.41	.20	.10	.01			
4	.01	.02	.16	.23	.39	.38	.18	.10	0			
5	0	.02	.18	.23	10	.38	.60	.14	.01			
6	0	.02	.14	.24	3.0	.36	.87	.16	0			
7	0	.01	.09	.24	.95	.33	.31	.17	.01			
8	0	.01	.08	.22	.66	.33	.26	.16	.01			
9	0	.02	.11	.26	.56	.33	.24	.14	.03			
10	0	.02	.18	.24	.49	.33	.23	.13	.02			
11	.01	.02	.20	.14	.44	.32	.51	.08	.01			
12	0	.02	.70	.17	.42	.31	.85	.06	.01			
13	0	.45	.44	.17	.38	.30	.58	.04	0			
14	0	.21	.29	.15	.38	.29	.30	.03	0			
15	0	.14	.25	.14	.37	.27	.25	.01	.01			
16	.02	.11	.25	.14	.33	.26	.22	.01	.01			
17	.02	.06	.25	.15	.33	.26	.22	.04	.01			
18	.01	.08	.25	.17	.33	.24	.20	.06	0			
19	.01	.07	.25	.20	.33	.24	.19	.08	0			
20	.01	.07	.29	.21	.33	.24	.18	.09	0			
21	.01	.11	.38	.19	.31	.24	.19	.07	0			
22	0	.13	2.7	.23	2.2	.47	.25	.08	0			
23	.01	.15	.63	.55	.57	.28	.25	.08	0			
24	.01	.17	1.7	.22	.52	.25	.58	.08	0			
25	.01	.16	3.7	.58	.45	.25	.24	.07	0			
26	.01	.13	.71	.37	.39	.22	.18	.05	0			
27	.01	.18	.56	2.0	.38	.23	.15	.04	0			
28	.01	.31	.38	.51	.40	.23	.14	.02	0			
29	.01	.25	.38	.34	.75	.23	.13	.01	0			
30	.02	.18	.29	.29	------	.22	.12	.01	0			
31	.02	------	.29	.29	------	.21	------	.01	------			------
TOTAL	.24	3.18	16.69	9.64	26.44	9.27	9.04	2.34	.15	0	0	0
MEAN	.008	.11	.54	.31	.91	.30	.30	.076	.005	0	0	0
MAX	.02	.45	3.7	2.0	10	.47	.87	.17	.03	0	0	0
MIN	0	.01	.08	.14	.25	.21	.12	.01	0	0	0	0
AC-FT	.5	6.3	33	19	52	18	18	4.6	.3	0	0	0

CAL YR 1971 TOTAL 498.10 MEAN 1.36 MAX 35 MIN 0 AC-FT 988
WTR YR 1972 TOTAL 76.99 MEAN .21 MAX 10 MIN 0 AC-FT 153

PEAK DISCHARGE (BASE, 100 CFS).--No peak above base.

11183000 SAN RAMON CREEK AT WALNUT CREEK, CALIF.

LOCATION.--Lat 37°52'38", long 122°02'52", in San Ramon Grant, Contra Costa County, on left bank 600 ft upstream from Rudgear Road, near south city limits of town of Walnut Creek. Prior to Dec. 8, 1971, at site 0.6 mile downstream.

DRAINAGE AREA.--47.9 sq mi. Area at site used prior to Dec. 8, 1971, 50.8 sq mi.

PERIOD OF RECORD.--October 1952 to current year.

GAGE.--Water-stage recorder. Concrete control since Dec. 4, 1962. Datum of gage is 146.4 ft above mean sea level (levels by Corps of Engineers). Prior to Dec. 8, 1971, at site 0.6 mile downstream at different datum.

AVERAGE DISCHARGE.--20 years, 14.9 cfs (10,800 acre-ft per year); median of yearly mean discharges, 7.7 cfs (5,600 acre-ft per year).

EXTREMES.--Current year: Maximum discharge, 188 cfs Feb. 5 (gage height, 2.38 ft); minimum daily, 0.92 cfs Aug. 13-17, Aug. 22 to Sept. 5.
Period of record: Maximum discharge, 7,980 cfs Jan. 31, 1963 (gage height, 14.40 ft, site and datum then in use), from rating curve extended above 2,200 cfs on basis of computed discharge at gage height 13.16 ft; maximum gage height, 14.55 ft Dec. 23, 1955, site and datum then in use; no flow at times in most years.

REMARKS.--Records good. No regulation; pumping for irrigation above station during periods of low flow.

REVISIONS (WATER YEARS).--WSP 1395: 1953(M).

DISCHARGE, IN CUBIC FEET PER SECOND, WATER YEAR OCTOBER 1971 TO SEPTEMBER 1972

DAY	OCT	NOV	DEC	JAN	FEB	MAR	APR	MAY	JUN	JUL	AUG	SEP
1	3.5	1.6	2.1	3.6	3.4	3.6	2.0	2.4	3.1	1.3	1.5	.92
2	2.0	1.7	14	3.6	3.1	3.2	2.1	2.6	1.5	1.3	1.5	.92
3	1.8	1.7	7.8	3.2	3.1	3.6	2.1	2.1	1.2	1.2	1.6	.92
4	1.6	1.7	5.1	2.6	6.9	3.6	2.3	1.8	1.2	1.2	1.5	.92
5	1.5	1.7	3.0	2.6	97	3.4	5.3	2.0	1.2	1.1	1.2	.92
6	1.4	1.6	2.2	2.6	27	3.2	9.8	2.3	1.2	1.2	1.1	1.0
7	1.3	1.6	1.9	2.6	10	3.0	4.4	2.1	1.2	1.1	1.1	1.0
8	1.4	1.6	1.8	2.6	6.6	3.0	2.9	2.1	1.2	1.1	1.1	1.1
9	1.3	2.1	1.9	2.6	6.0	3.0	2.6	2.3	1.5	1.1	1.1	1.1
10	1.3	2.1	2.2	2.6	5.0	3.0	2.5	2.3	2.0	1.1	1.0	1.1
11	1.3	2.1	2.6	2.5	4.4	2.9	4.4	2.3	1.9	1.0	1.0	1.1
12	1.3	1.8	14	2.5	4.2	2.9	9.5	2.3	1.5	1.0	1.0	1.2
13	1.4	5.8	7.4	2.5	3.6	3.0	6.9	2.3	1.2	1.0	.92	1.1
14	1.4	5.6	4.4	2.5	3.6	2.9	3.8	2.3	1.1	1.1	.92	1.1
15	1.3	2.7	2.9	2.5	2.9	2.9	3.1	2.3	1.1	1.1	.92	1.1
16	1.3	2.1	2.5	2.5	2.5	2.9	2.9	2.6	1.2	1.1	.92	1.2
17	1.6	1.8	2.0	2.5	2.5	2.9	2.9	2.8	1.3	1.0	.92	1.2
18	1.6	1.7	2.0	2.5	2.8	2.7	2.8	2.6	1.3	1.0	1.0	1.2
19	1.6	1.7	2.2	2.5	2.9	2.4	2.6	2.5	1.3	1.1	1.0	1.2
20	1.6	1.7	2.2	2.5	2.9	2.1	2.6	2.8	1.6	1.1	1.0	1.2
21	1.6	1.7	3.4	2.5	2.9	2.1	2.6	3.1	1.7	1.1	1.0	1.2
22	1.7	1.7	38	2.5	23	7.0	2.6	3.1	1.9	1.1	.92	1.2
23	1.8	1.8	15	5.8	7.7	5.1	2.6	2.9	1.9	1.1	.92	1.1
24	1.7	1.8	27	4.0	5.0	2.7	6.3	2.8	1.6	1.3	.92	1.1
25	1.6	1.8	71	8.8	4.0	2.3	4.6	2.9	1.7	1.1	.92	1.1
26	1.6	1.8	11	8.0	3.6	2.1	3.2	2.8	1.6	1.3	.92	1.3
27	1.6	1.7	9.5	38	3.2	2.0	3.1	2.8	1.5	1.3	.92	2.0
28	1.6	2.4	7.4	11	2.8	2.0	2.8	2.9	1.5	1.3	.92	2.6
29	1.5	3.5	5.2	5.0	4.6	1.8	2.5	2.6	1.5	1.5	.92	2.3
30	1.7	2.7	4.8	4.0	------	1.8	2.4	2.6	1.5	1.5	.92	1.5
31	1.7	------	4.0	3.6	------	2.0	------	2.5	------	1.5	.92	------
TOTAL	49.6	65.3	280.5	146.8	257.2	91.1	110.2	77.8	45.2	36.3	32.50	36.90
MEAN	1.60	2.18	9.05	4.74	8.87	2.94	3.67	2.51	1.51	1.17	1.05	1.23
MAX	3.5	5.8	71	38	97	7.0	9.8	3.1	3.1	1.5	1.6	2.6
MIN	1.3	1.6	1.8	2.5	2.5	1.8	2.0	1.8	1.1	1.0	.92	.92
AC-FT	98	130	556	291	510	181	219	154	90	72	64	73

CAL YR 1971 TOTAL 3,005.60 MEAN 8.23 MAX 190 MIN 1.3 AC-FT 5,960
WTR YR 1972 TOTAL 1,229.40 MEAN 3.36 MAX 97 MIN .92 AC-FT 2,440

PEAK DISCHARGE (BASE, 500 CFS).--No peak above base.

11183600 WALNUT CREEK AT CONCORD, CALIF.

LOCATION.--Lat 37°56'43", long 122°02'55", in Arroyo de las Nueces y Bolbones Grant, Contra Costa County, on right bank at southwest city limits of Concord, 0.2 mile upstream from Southern Pacific Railroad bridge, and 3.8 miles downstream from confluence of San Ramon and Las Trampas Creeks.

DRAINAGE AREA.--85.1 sq mi.

PERIOD OF RECORD.--October 1968 to current year.

GAGE.--Water-stage recorder and concrete control. Datum of gage is 35.44 ft above mean sea level (Corps of Engineers bench mark).

EXTREMES.--Current year: Maximum discharge, 488 cfs Feb. 5 (gage height, 4.47 ft); minimum daily, 3.9 cfs May 4.
Period of record: Maximum discharge, 5,490 cfs Jan. 26, 1969 (gage height, 10.75 ft); minimum daily, 3.4 cfs Oct. 21, 1968.

REMARKS.--Records good. Flow slightly regulated by Lafayette Reservoir 10 miles upstream (capacity, 4,240 acre-ft). Some small diversions for irrigation above station.

DISCHARGE, IN CUBIC FEET PER SECOND, WATER YEAR OCTOBER 1971 TO SEPTEMBER 1972

DAY	OCT	NOV	DEC	JAN	FEB	MAR	APR	MAY	JUN	JUL	AUG	SEP
1	9.7	4.7	7.5	8.8	9.0	8.9	6.6	4.2	6.0	7.4	5.9	6.6
2	6.4	9.0	59	8.8	8.2	8.0	6.2	4.2	6.2	6.7	6.8	6.6
3	5.7	5.2	24	7.9	8.3	7.5	6.4	4.4	5.3	6.4	6.3	6.8
4	5.9	5.7	14	9.0	23	7.5	6.7	3.9	5.6	5.8	5.7	6.2
5	5.7	22	9.2	7.8	265	7.1	37	4.5	6.0	5.1	5.6	6.6
6	5.7	6.1	7.7	7.8	62	7.1	30	5.3	6.1	5.5	5.4	7.1
7	5.9	6.1	7.4	7.6	22	6.6	12	5.0	6.0	5.5	5.7	5.8
8	5.9	16	6.6	7.5	16	6.6	8.4	4.8	6.0	5.5	5.7	5.8
9	5.9	8.9	6.9	7.5	14	6.3	8.0	4.6	9.2	4.7	5.4	5.6
10	5.9	8.9	11	7.5	12	6.0	8.0	5.0	9.3	4.9	5.6	5.5
11	5.7	18	7.8	7.5	10	5.9	28	5.0	6.9	4.7	5.6	5.2
12	5.6	10	42	7.9	9.7	5.8	43	5.0	5.8	5.0	4.9	5.1
13	6.5	34	18	7.8	9.7	6.0	21	5.2	5.7	5.8	4.4	5.2
14	5.1	14	12	7.9	9.7	6.0	12	5.4	4.9	6.2	4.7	5.5
15	5.4	8.0	8.9	7.7	9.4	6.1	9.6	5.1	4.5	6.6	5.0	5.3
16	5.1	6.6	7.5	7.9	8.9	5.9	8.9	5.1	5.3	4.6	4.9	5.5
17	5.7	6.6	7.1	7.8	8.3	6.7	8.9	6.3	4.6	4.9	5.0	5.2
18	5.9	6.6	7.1	7.8	8.4	6.9	8.9	7.2	4.8	5.3	5.4	5.8
19	5.9	6.6	7.5	7.8	8.4	6.4	8.9	5.7	4.8	5.2	5.1	5.9
20	5.6	7.1	7.1	7.9	8.2	5.9	10	5.8	4.9	4.9	5.4	5.3
21	5.7	6.1	22	7.8	8.3	6.3	9.6	6.5	5.0	5.8	5.0	4.8
22	5.1	6.6	108	7.7	60	12	8.4	6.6	4.5	6.2	5.6	4.8
23	5.2	7.5	49	25	19	11	7.1	6.8	4.9	5.2	5.3	4.7
24	5.2	6.6	93	13	16	8.0	29	6.7	5.3	5.2	4.6	4.4
25	5.0	6.6	195	35	10	6.6	9.6	6.5	6.1	5.8	4.4	4.4
26	7.7	7.5	31	20	8.9	5.8	5.7	6.8	5.5	6.2	4.4	7.8
27	5.5	7.5	32	125	8.0	6.0	5.7	6.8	5.6	5.5	4.8	18
28	4.8	12	17	27	8.0	6.0	5.2	6.5	6.1	5.9	5.2	8.2
29	4.4	10	13	13	13	6.0	4.8	6.1	8.5	6.0	5.1	6.5
30	4.5	8.4	11	11	------	6.1	4.3	6.0	7.7	5.6	6.9	5.6
31	5.9	------	9.4	9.3	------	6.4	------	6.0	------	4.8	6.3	------
TOTAL	178.2	288.9	858.7	452.0	681.4	213.4	377.9	173.0	177.1	172.9	166.1	185.8
MEAN	5.75	9.63	27.7	14.6	23.5	6.88	12.6	5.58	5.90	5.58	5.36	6.19
MAX	9.7	34	195	125	265	12	43	7.2	9.3	7.4	6.9	18
MIN	4.4	4.7	6.6	7.5	8.0	5.8	4.3	3.9	4.5	4.6	4.4	4.4
AC-FT	353	573	1,700	897	1,350	423	750	343	351	343	329	369

CAL YR 1971 TOTAL 7,739.9 MEAN 21.2 MAX 553 MIN 4.4 AC-FT 15,350
WTR YR 1972 TOTAL 3,925.4 MEAN 10.7 MAX 265 MIN 3.9 AC-FT 7,790

PEAK DISCHARGE (BASE, 850 CFS).--No peak above base.

11456000 NAPA RIVER NEAR ST. HELENA, CALIF.

LOCATION.--Lat 38°29'52", long 122°25'37", in Carne Humana Grant, Napa County, on right bank 0.2 mile upstream from highway bridge, 1.3 miles northeast of Zinfandel, and 2.5 miles east of St. Helena.

DRAINAGE AREA.--81.4 sq mi.

PERIOD OF RECORD.--October 1929 to September 1932, October 1939 to current year. Monthly discharge only for some periods, published in WSP 1315-B.

GAGE.--Water-stage recorder. Datum of gage is 172.12 ft above mean sea level. Prior to Nov. 22, 1958, at datum 1.00 ft higher.

AVERAGE DISCHARGE.--36 years, 93.3 cfs (67,600 acre-ft per year); median of yearly mean discharges, 72 cfs (52,200 acre-ft per year).

EXTREMES.--Current year: Maximum discharge, 1,120 cfs Dec. 27 (gage height, 5.03 ft); minimum daily, 0.17 cfs Aug. 15.
Period of record: Maximum discharge, 12,600 cfs Dec. 22, 1955 (gage height, 16.17 ft, present datum); no flow at times.

REMARKS.--Records good. Some regulation by Bell Canyon Reservoir since 1959 (capacity, 2,530 acre-ft). Small diversions above station for irrigation of about 1,200 acres. Records of water temperatures for the current year are published in Part 2 of this report.

DISCHARGE, IN CUBIC FEET PER SECOND, WATER YEAR OCTOBER 1971 TO SEPTEMBER 1972

DAY	OCT	NOV	DEC	JAN	FEB	MAR	APR	MAY	JUN	JUL	AUG	SEP
1	.85	1.2	2.3	31	57	89	17	14	5.8	1.2	.58	.24
2	1.0	.65	4.2	29	48	77	16	13	5.3	1.0	.53	.27
3	1.0	1.5	9.0	26	52	76	16	12	5.3	1.5	.53	.29
4	.85	1.2	4.8	27	140	70	16	12	4.8	1.5	.65	.27
5	.74	1.2	1.7	24	463	60	21	12	3.7	1.7	.53	.31
6	.65	1.2	.85	22	317	54	28	12	3.7	2.0	.37	.33
7	.74	1.5	.74	22	200	49	19	12	3.0	1.7	.31	.29
8	.65	1.2	.85	21	146	46	18	12	3.3	1.7	.29	.24
9	.65	1.5	1.0	21	112	47	18	11	4.8	1.7	.33	.19
10	.65	1.7	1.2	20	89	56	17	11	5.3	2.0	.33	.20
11	.65	3.3	1.2	19	75	47	28	10	3.3	1.5	.33	.31
12	.65	11	30	19	65	43	54	9.6	4.2	1.5	.33	.35
13	.58	11	21	18	58	40	48	9.0	2.7	1.5	.24	.37
14	.58	8.5	11	18	53	37	32	9.0	2.0	.58	.20	.40
15	.58	3.3	8.5	17	47	34	26	9.0	2.7	.74	.17	.44
16	.58	2.0	7.4	17	43	32	23	8.5	2.7	1.0	.22	.48
17	.53	2.0	6.4	17	40	31	22	7.4	2.7	1.0	.27	.53
18	.53	2.0	6.4	16	38	28	21	5.3	2.3	1.2	.31	.53
19	.48	2.7	5.8	16	33	26	16	7.4	3.0	.85	.31	.53
20	.37	2.0	5.8	16	33	26	14	7.9	3.3	.65	.48	.53
21	.37	2.0	6.4	22	33	24	16	7.4	3.3	.53	.48	.53
22	.44	2.0	127	97	59	31	17	7.9	2.7	.65	.35	.53
23	.85	2.7	65	214	85	26	16	7.9	1.7	.74	.27	.53
24	1.0	2.3	85	86	103	24	18	7.4	1.5	.85	.24	.48
25	1.0	2.3	168	116	100	22	16	7.9	1.7	1.2	.23	.48
26	.65	2.3	143	96	88	18	16	7.4	2.3	1.0	.21	.65
27	1.5	3.7	482	193	74	18	15	7.9	2.0	1.0	.19	.65
28	1.0	4.8	116	154	76	14	15	5.8	2.7	.74	.19	.65
29	1.0	5.3	72	106	126	16	12	6.4	2.0	.53	.21	1.0
30	.53	3.3	51	83	------	15	13	6.4	1.7	.74	.20	3.0
31	.85	------	38	68	------	17	------	5.8	------	.58	.18	------
TOTAL	22.50	91.35	1,483.54	1,651	2,853	1,193	624	282.3	95.5	35.08	10.06	15.60
MEAN	.73	3.05	47.9	53.3	98.4	38.5	20.8	9.11	3.18	1.13	.32	.52
MAX	1.5	11	482	214	463	89	54	14	5.8	2.0	.65	3.0
MIN	.37	.65	.74	16	33	14	12	5.3	1.5	.53	.17	.19
AC-FT	45	181	2,940	3,270	5,660	2,370	1,240	560	189	70	20	31

CAL YR 1971 TOTAL 18,709.39 MEAN 51.3 MAX 1,330 MIN .16 AC-FT 37,110
WTR YR 1972 TOTAL 8,356.93 MEAN 22.8 MAX 482 MIN .17 AC-FT 16,580

PEAK DISCHARGE (BASE, 4,200 CFS).--No peak above base.

11456500 CONN CREEK NEAR OAKVILLE, CALIF.

LOCATION.--Lat 38°26'50", long 122°22'47", in Caymus Grant, Napa County, on left bank 20 ft upstream from Oakville Cross Road bridge, and 1.4 miles northeast of Oakville.

DRAINAGE AREA.--55.4 sq mi.

PERIOD OF RECORD.--October 1929 to September 1959 (published as "near St. Helena"), October 1970 to current year. Monthly discharge only for some periods, published in WSP 1315-B.

GAGE.--Water-stage recorder. Datum of gage is 112.18 ft above mean sea level (levels by county of Napa). November 1929, to Aug. 4, 1952, at site 3.3 miles upstream at different datum. Aug. 5, 1952, to Sept. 30, 1959, at site 4.9 miles upstream at different datum.

AVERAGE DISCHARGE (prior to construction of Conn Dam).--16 years (1929-45), 33.9 cfs (24,540 acre-ft per year).

EXTREMES.--Current year: Maximum discharge, 6.8 cfs Apr. 3 (gage height, 2.42 ft); no flow for many days.
Period of record: Maximum discharge, 7,700 cfs Feb. 27, 1940 (gage height, 11.80 ft, site and datum then in use); no flow for many days in each year.

REMARKS.--Records good. Flow regulated by Lake Hennessey 6.5 miles upstream beginning in December 1945 (capacity, 31,000 acre-ft). Diversion for irrigation of about 700 acres occurs between dam and gage. Some effluent ground water flows past the station during the summer months at times when the stream is dry a short distance above and below the gage; no flow is computed for these periods.

DISCHARGE, IN CUBIC FEET PER SECOND, WATER YEAR OCTOBER 1971 TO SEPTEMBER 1972

DAY	OCT	NOV	DEC	JAN	FEB	MAR	APR	MAY	JUN	JUL	AUG	SEP
1						0	2.5	1.3	1.1	.92	1.2	.34
2						0	2.6	1.3	1.1	.56	1.2	.44
3						0	5.0	1.5	1.2	.62	1.3	.38
4						0	3.8	1.5	1.1	.84	1.3	.34
5						0	2.3	1.5	1.4	1.1	1.3	.30
6						0	1.9	1.3	2.8	1.1	1.3	.30
7						0	.84	1.2	4.1	.56	1.3	.30
8						0	.56	1.2	3.8	.30	1.1	.26
9						0	.44	1.2	2.0	1.1	.92	.26
10						0	.44	1.2	2.2	.34	.92	.26
11						0	.62	1.2	3.0	.56	.84	.26
12						0	1.2	1.2	3.0	.56	.68	.26
13						0	2.2	1.1	3.0	.44	.68	.22
14						0	.76	1.2	1.5	.84	1.2	.22
15						0	2.2	1.2	.84	.50	1.3	.22
16						0	3.2	1.2	.34	.44	.84	.22
17						0	3.5	1.2	1.5	.56	.62	.22
18						0	2.6	1.2	.62	.38	.56	.22
19						0	2.8	1.2	.30	.50	.76	.18
20						0	1.9	1.2	2.5	1.0	.76	.14
21						0	1.7	1.2	2.3	1.3	1.3	.10
22						0	3.5	1.2	.76	2.0	1.3	.10
23						0	4.1	1.2	1.3	2.5	1.3	.08
24						0	4.4	1.2	1.1	2.3	1.1	.08
25						0	1.3	1.0	1.2	2.2	.92	.08
26						0	1.9	.92	1.1	2.3	.76	.30
27						0	1.2	.84	.76	2.2	.68	.38
28						0	1.1	.84	.68	1.9	.62	.26
29						0	1.2	.84	.84	1.6	.44	.14
30					------	.30	1.4	.92	.84	1.7	.38	.12
31		------			------	1.7	------	1.0	------	1.5	.34	------
TOTAL	0	0	0	0	0	2.00	63.16	36.26	48.28	34.72	29.22	6.98
MEAN	0	0	0	0	0	.065	2.11	1.17	1.61	1.12	.94	.23
MAX	0	0	0	0	0	1.7	5.0	1.5	4.1	2.5	1.3	.44
MIN	0	0	0	0	0	0	.44	.84	.30	.30	.34	.08
AC-FT	0	0	0	0	0	4.0	125	72	96	69	58	14

CAL YR 1971 TOTAL 4,896.54 MEAN 13.4 MAX 153 MIN 0 AC-FT 9,710
WTR YR 1972 TOTAL 220.62 MEAN .60 MAX 5.0 MIN 0 AC-FT 438

11458000 NAPA RIVER NEAR NAPA, CALIF.

LOCATION.--Lat 38°22'06", long 122°18'08", in Yajome Grant, Napa County, on left bank at downstream side of Oak Knoll Avenue bridge, 0.4 mile downstream from Dry Creek, and 5 miles north of Napa.

DRAINAGE AREA.--218 sq mi.

PERIOD OF RECORD.--October 1929 to September 1932, October 1959 to current year. Monthly discharge only for some periods, published in WSP 1315-B.

GAGE.--Water-stage recorder. Datum of gage is 24.74 ft above mean sea level.

AVERAGE DISCHARGE.--16 years, 172 cfs (124,600 acre-ft per year).

EXTREMES.--Current year: Maximum discharge, 1,430 cfs Dec. 27 (gage height, 8.06 ft); no flow for many days.
Period of record: Maximum discharge, 16,900 cfs Jan. 31, 1963 (gage height, 27.59 ft); no flow at times.

REMARKS.--Records good except those below 0.5 cfs, which are fair. Flow slightly regulated by Lake Hennessey beginning in December 1945 (capacity, 31,000 acre-ft). Diversions for irrigation of about 10,000 acres above station.

REVISIONS (WATER YEARS).--WSP 1315-B: 1930(M).

DISCHARGE, IN CUBIC FEET PER SECOND, WATER YEAR OCTOBER 1971 TO SEPTEMBER 1972

DAY	OCT	NOV	DEC	JAN	FEB	MAR	APR	MAY	JUN	JUL	AUG	SEP
1	5.9	1.9	7.6	54	94	137	31	21	8.0	.17		0
2	6.9	4.8	9.0	44	75	118	29	21	6.5	1.0		0
3	6.2	5.3	20	38	70	109	32	20	5.0	.30		0
4	4.5	4.3	12	37	169	106	32	18	5.8	.28		0
5	3.1	4.3	9.7	32	604	91	34	20	5.7	.26		.50
6	3.1	4.8	8.1	29	505	84	49	22	5.1	1.1		.20
7	3.1	5.6	7.0	29	325	76	37	21	3.5	.40		.17
8	3.2	5.6	6.4	26	248	70	29	20	3.3	.15		.15
9	2.8	6.0	6.4	24	202	68	31	19	3.5	.05		.10
10	2.4	7.5	7.0	23	162	77	30	18	4.8	0		0
11	2.1	10	7.0	23	132	70	41	17	3.8	0		.20
12	1.6	15	21	22	112	64	65	16	3.8	0		.10
13	2.9	19	41	21	102	58	85	14	3.7	0		0
14	3.4	13	20	20	92	50	56	13	2.9	0		0
15	3.5	9.0	12	20	85	45	48	12	1.4	0		.10
16	3.6	7.5	10	19	77	47	42	10	1.0	0		.30
17	2.9	7.0	9.1	19	71	44	40	10	.78	.20		1.0
18	2.3	7.5	8.1	19	70	41	38	9.1	1.2	1.5		1.0
19	2.9	7.8	7.8	19	63	43	30	7.9	.85	.40		.96
20	2.4	7.5	7.5	19	59	41	21	9.8	.38	.10		.96
21	1.2	7.5	7.8	20	58	40	24	11	.35	0		1.0
22	3.5	8.0	167	91	96	43	30	10	.32	0		.92
23	2.9	8.5	191	318	112	46	30	11	.30	0		.88
24	2.8	8.5	120	161	155	38	33	7.6	.28	0		.80
25	1.7	8.5	392	175	156	38	30	8.4	.26	0		.92
26	3.0	9.0	259	175	139	19	26	8.4	.24	0		1.3
27	1.3	10	757	365	113	19	27	8.6	.22	0		1.2
28	.71	12	258	298	100	14	25	8.5	.21	0		1.4
29	3.6	8.9	149	193	188	10	20	8.6	.19	0		1.3
30	4.0	8.0	102	149	------	17	19	8.6	.18	0		1.6
31	1.9	------	72	113	------	23	------	8.3	------	0		------
TOTAL	95.41	242.3	2,711.5	2,595	4,434	1,746	1,064	417.8	73.56	5.91	0	17.06
MEAN	3.08	8.08	87.5	83.7	153	56.3	35.5	13.5	2.45	.19	0	.57
MAX	6.9	19	757	365	604	137	85	22	8.0	1.5	0	1.6
MIN	.71	1.9	6.4	19	58	10	19	7.6	.18	0	0	0
AC-FT	189	481	5,380	5,150	8,790	3,460	2,110	829	146	12	0	34

CAL YR 1971 TOTAL 32,921.00 MEAN 90.2 MAX 1,700 MIN 0 AC-FT 65,300
WTR YR 1972 TOTAL 13,402.54 MEAN 36.6 MAX 757 MIN 0 AC-FT 26,580

PEAK DISCHARGE (BASE, 5,000 CFS).--No peak above base.

NOTE.--No gage-height record June 19 to Sept. 16.

11458100 MILLIKEN CREEK NEAR NAPA, CALIF.

LOCATION.--Lat 38°20'19", long 122°16'06", in Yajome Grant, Napa County, on right bank at upstream side of Hedgeside Road bridge, 3.0 miles northwest of town of Napa.

DRAINAGE AREA.--17.3 sq mi.

PERIOD OF RECORD.--October 1970 to current year.

GAGE.--Water-stage recorder. Datum of gage is 37.68 ft above mean sea level (levels by county of Napa).

EXTREMES.--Current year: Maximum discharge, 366 cfs Dec. 26 (gage height, 2.91 ft); no flow Aug. 12.
Period of record: Maximum discharge, 3,580 cfs Dec. 3, 1970 (gage height, 5.68 ft), from rating curve extended above 1,100 cfs; no flow Aug. 12, 1972.

REMARKS.--Records good. Flow regulated by Milliken Reservoir (capacity, 2,000 acre-ft) and by several small lakes and diversion dams on the Silverado Golf Course; diversions above station for irrigation of about 500 acres and for municipal supply of city of Napa.

DISCHARGE, IN CUBIC FEET PER SECOND, WATER YEAR OCTOBER 1971 TO SEPTEMBER 1972

DAY	OCT	NOV	DEC	JAN	FEB	MAR	APR	MAY	JUN	JUL	AUG	SEP
1	4.8	2.1	21	5.7	4.8	2.8	.44	2.1	.88	1.2	.88	1.2
2	3.0	1.3	25	2.6	4.4	2.3	.36	1.3	1.3	2.5	1.0	1.8
3	2.0	2.1	21	1.5	3.3	2.1	.54	1.2	1.2	2.3	.36	1.4
4	1.4	1.3	16	1.9	3.7	2.1	.76	1.3	1.0	2.1	.28	2.9
5	.88	2.1	19	2.5	37	1.7	1.0	.44	.64	2.1	1.3	2.1
6	1.5	1.2	18	2.1	31	1.7	1.5	.64	.36	1.3	.76	.34
7	2.0	3.0	17	2.1	10	1.7	1.7	1.3	.76	1.3	.22	.41
8	1.5	2.3	16	2.5	9.2	2.1	1.9	1.5	1.2	1.9	.23	.94
9	2.5	.88	15	1.5	8.8	1.5	.64	1.5	1.3	1.7	.46	.48
10	4.0	.64	16	1.5	7.0	1.5	.97	1.5	1.0	1.5	.25	.52
11	9.2	3.0	16	1.7	4.8	1.7	3.7	1.3	1.2	1.3	.04	2.3
12	3.7	3.3	20	1.5	3.7	1.5	1.7	.88	.51	1.2	0	2.5
13	2.3	4.8	17	1.0	3.0	1.3	1.9	.88	.88	1.2	.08	9.7
14	1.0	2.5	16	1.3	3.0	1.3	1.5	1.0	.54	1.0	.84	2.7
15	1.2	2.5	15	1.0	2.5	5.0	1.2	1.0	.64	.88	1.1	3.4
16	2.6	2.8	14	.88	2.8	.28	1.0	1.2	.44	1.3	.58	2.5
17	.76	2.5	14	1.0	2.3	.64	1.4	2.3	.64	1.5	1.0	2.7
18	1.2	4.4	14	1.0	2.1	.44	.28	1.9	.44	1.7	.87	2.5
19	1.3	4.8	14	1.0	1.9	.22	.36	1.0	.64	1.2	.13	2.5
20	1.9	5.2	13	1.0	1.9	.28	.36	.44	.44	1.0	.11	2.5
21	1.7	5.2	13	1.2	1.9	.64	.36	1.9	.44	1.0	2.7	1.3
22	1.9	5.2	23	1.9	2.8	1.0	.22	1.5	.36	1.2	.80	.06
23	1.0	5.7	22	7.2	4.2	1.0	.36	1.2	1.0	1.7	.80	.02
24	1.3	5.2	21	4.0	2.7	1.3	.44	1.2	.88	1.0	.94	.17
25	1.3	5.2	41	7.7	3.0	1.2	.76	.76	.88	1.3	.62	.49
26	2.1	4.8	55	9.2	3.7	1.0	.44	.76	.88	1.3	.80	1.8
27	1.5	5.2	96	63	2.3	.88	.54	1.0	.88	1.0	.68	1.0
28	1.7	5.7	33	25	2.3	.88	1.1	.76	.76	.64	.09	.57
29	1.7	7.2	27	11	3.0	.88	2.8	.76	.54	.64	.53	.47
30	1.3	13	21	8.7	------	.22	2.3	.88	.54	.88	.38	.38
31	2.1	------	7.2	6.2	------	.36	------	.28	------	1.3	.38	------
TOTAL	66.34	115.12	696.2	180.38	173.1	41.52	32.53	35.68	23.17	42.14	19.21	51.65
MEAN	2.14	3.84	22.5	5.82	5.97	1.34	1.08	1.15	.77	1.36	.62	1.72
MAX	9.2	13	96	63	37	5.0	3.7	2.3	1.3	2.5	2.7	9.7
MIN	.76	.64	7.2	.88	1.9	.22	.22	.28	.36	.64	0	.02
AC-FT	132	228	1,380	358	343	82	65	71	46	84	38	102

CAL YR 1971 TOTAL 3,227.90 MEAN 8.84 MAX 229 MIN .44 AC-FT 6,400
WTR YR 1972 TOTAL 1,477.04 MEAN 4.04 MAX 96 MIN 0 AC-FT 2,930

PEAK DISCHARGE((BASE, 600 CFS).--No peak above base.

11458200 REDWOOD CREEK NEAR NAPA, CALIF.

LOCATION.--Lat 38°19'04", long 122°20'35", in Napa Grant, Napa County, on right bank 2.9 miles upstream from confluence with Browns Valley Creek, and 3.4 miles northwest of Napa.

DRAINAGE AREA.--9.79 sq mi.

PERIOD OF RECORD.--July 1958 to current year.

GAGE.--Water-stage recorder. Datum of gage is 166.16 ft above mean sea level.

AVERAGE DISCHARGE.--14 years, 10.4 cfs (7,530 acre-ft per year); median of yearly mean discharges, 7.9 cfs (5,700 acre-ft per year).

EXTREMES.--Current year: Maximum discharge, 81 cfs Jan. 27 (gage height, 3.64 ft); no flow for many days.
Period of record: Maximum discharge, 1,460 cfs Nov. 27, 1970 (gage height, 8.52 ft); maximum gage height, 10.44 ft Jan. 5, 1965; no flow for many days in each year.

REMARKS.--Records good. Small storage and release affects summer flow.

DISCHARGE, IN CUBIC FEET PER SECOND, WATER YEAR OCTOBER 1971 TO SEPTEMBER 1972

DAY	OCT	NOV	DEC	JAN	FEB	MAR	APR	MAY	JUN	JUL	AUG	SEP
1		0	.35	2.3	5.8	6.5	1.0	.40	.08	0		
2		0	.90	1.9	4.6	5.7	.94	.38	.06	0		
3		0	.64	1.6	4.4	5.1	.92	.33	.05	0		
4		0	.52	1.4	6.8	4.7	.85	.33	.05	0		
5		0	.46	1.3	31	4.2	1.3	.38	.04	0		
6		0	.41	1.1	21	3.8	2.2	.43	.03	0		
7		0	.37	1.1	12	3.5	1.6	.42	.03	0		
8		.30	.35	1.0	9.5	3.2	1.2	.40	.03	0		
9		1.1	.45	.94	7.9	3.0	1.1	.36	.02	0		
10		.22	.38	1.1	6.8	3.4	.98	.33	.02	0		
11		.24	.34	.84	6.0	3.0	2.2	.33	.02	0		
12		.22	3.3	.84	5.3	2.8	5.5	.29	.01	0		
13		1.4	.96	.84	4.6	2.6	5.7	.26	.01	0		
14		.70	.80	.74	4.2	2.5	3.3	.26	0	0		
15		.27	.66	.66	4.0	2.2	2.5	.24	0	0		
16		.21	.56	.66	3.6	2.0	2.0	.22	0	0		
17		.21	.52	.66	3.4	1.8	2.5	.18	0	0		
18		.21	.50	.58	3.0	1.7	2.3	.16	0	.14		
19		.19	.48	.66	2.9	1.6	1.2	.16	0	0		
20		.17	.37	.66	2.7	1.5	1.1	.16	0	0		
21		.14	.65	.94	2.6	1.5	1.0	.18	0	0		
22		.11	3.9	6.8	4.4	1.7	1.0	.20	0	0		
23		.11	3.5	24	3.8	1.7	.83	.20	0	0		
24		.11	5.0	7.6	4.4	1.5	1.1	.20	0	0		
25		.20	12	16	5.0	1.4	.91	.20	0	0		
26		.38	11	11	4.4	1.2	.75	.18	0	0		
27		.30	17	33	4.0	1.1	.62	.16	0	0		
28		.74	8.8	12	4.0	1.1	.54	.13	0	0		
29		.64	5.2	9.2	10	1.1	.48	.10	0	0		
30		.26	4.0	7.3	------	1.0	.44	.08	0	0		
31		------	3.0	6.8	------	1.0	------	.07	------	0		------
TOTAL	0	8.43	87.37	155.52	192.1	79.1	48.06	7.72	.45	.14	0	0
MEAN	0	.28	2.82	5.02	6.62	2.55	1.60	.25	.015	.005	0	0
MAX	0	1.4	17	33	31	6.5	5.7	.43	.08	.14	0	0
MIN	0	0	.34	.58	2.6	1.0	.44	.07	0	0	0	0
AC-FT	0	17	173	308	381	157	95	15	.9	.3	0	0

CAL YR 1971 TOTAL 1,376.08 MEAN 3.77 MAX 125 MIN 0 AC-FT 2,730
WTR YR 1972 TOTAL 578.89 MEAN 1.58 MAX 33 MIN 0 AC-FT 1,150

PEAK DISCHARGE (BASE, 400 CFS).--No peak above base.

NOTE.--No gage-height record Nov. 15 to Jan. 3.

11458300 NAPA CREEK AT NAPA, CALIF.

LOCATION.--Lat 38°18'07", long 122°18'10", in Napa Grant, Napa County, on left bank 150 ft upstream from bridge on State Highway 29 in town of Napa, 0.6 mile downstream from confluence of Redwood and Browns Creeks.

DRAINAGE AREA.--14.9 sq mi.

PERIOD OF RECORD.--October 1970 to current year.

GAGE.--Water-stage recorder. Datum of gage is 32.60 ft above mean sea level (levels by county of Napa).

EXTREMES.--Current year: Maximum discharge, 193 cfs Jan. 27 (gage height, 2.55 ft); no flow for many days. Period of record: Maximum discharge, 1,640 cfs Dec. 3, 1970 (gage height, 8.30 ft), from rating curve extended above 500 cfs; no flow for many days in each year.

REMARKS.--Records good except those for period of no gage-height record, which are fair. No regulation; small diversion above station for domestic use.

DISCHARGE, IN CUBIC FEET PER SECOND, WATER YEAR OCTOBER 1971 TO SEPTEMBER 1972

DAY	OCT	NOV	DEC	JAN	FEB	MAR	APR	MAY	JUN	JUL	AUG	SEP
1	0	.01	.40	3.0	8.9	8.4	1.1	.45	.15	.02		0
2	.01	.01	1.2	2.5	6.6	6.2	.88	.49	.12	.06		0
3	.01	0	.76	1.8	5.0	5.8	.88	.49	.12	.01		0
4	.01	0	.66	1.7	9.8	5.0	.88	.49	.12	.01		0
5	0	0	.60	1.6	61	4.1	2.2	.54	.08	.01		0
6	0	.01	.56	1.6	37	3.9	2.2	.54	.06	.01		0
7	0	.01	.48	1.6	20	3.7	1.6	.49	.08	.01		0
8	0	.01	.44	1.4	16	3.3	1.2	.45	.08	.01		0
9	0	.01	.60	1.3	12	3.1	1.1	.45	.12	.01		0
10	0	.01	.50	1.2	10	3.3	.88	.41	.25	0		0
11	0	.15	.44	1.2	7.5	3.3	4.1	.37	.21	0		0
12	0	.43	4.5	1.2	6.6	2.9	5.6	.29	.02	0		0
13	0	3.6	1.2	1.2	5.8	2.7	7.6	.29	.06	0		0
14	0	.41	1.0	1.1	4.7	2.7	3.5	.21	.06	0		0
15	0	.29	.83	.98	4.1	2.2	2.7	.18	.06	0		0
16	.01	.29	.72	.88	3.7	1.9	2.0	.21	.06	0		0
17	.01	.29	.66	.88	3.5	1.9	1.9	.29	.08	.01		0
18	0	.29	.68	.88	3.3	1.7	2.2	.33	.08	.01		0
19	0	.25	.60	.78	3.1	1.6	1.2	.25	.08	.01		0
20	.01	.21	.42	.78	2.9	1.6	1.1	.29	.08	.01		0
21	.01	.15	.90	1.1	2.9	1.6	.88	.71	.06	.01		0
22	.01	.15	5.2	6.1	5.8	1.6	.88	.29	.06	0		0
23	.01	.15	4.5	35	4.7	1.6	.78	.25	.08	0		0
24	.01	.15	6.5	12	4.7	1.6	1.1	.25	.08	0		0
25	.01	.31	18	25	5.4	1.3	.78	.25	.06	0		4.2
26	.01	.54	15	19	4.7	1.2	.70	.15	.10	0		.30
27	.01	.41	27	73	3.9	1.1	.64	.18	.04	0		.12
28	.01	.29	10	24	4.1	1.1	.59	.18	.04	0		.01
29	.01	.29	7.5	16	14	1.1	.49	.15	.02	0		.01
30	.01	.33	5.0	13	------	1.1	.45	.10	.01	0		.01
31	.01	------	4.0	11	------	1.2	------	.12	------	0		------
TOTAL	.17	9.05	120.85	262.78	281.7	83.8	52.11	10.14	2.52	.20	0	4.65
MEAN	.006	.30	3.90	8.48	9.71	2.70	1.74	.33	.084	.007	0	.16
MAX	.01	3.6	27	73	61	8.4	7.6	.71	.25	.06	0	4.2
MIN	0	0	.40	.78	2.9	1.1	.45	.10	.01	0	0	0
AC-FT	.3	18	240	521	559	166	103	20	5.0	.4	0	9.2

CAL YR 1971 TOTAL 1,848.34 MEAN 5.06 MAX 166 MIN 0 AC-FT 3,670
WTR YR 1972 TOTAL 827.97 MEAN 2.26 MAX 73 MIN 0 AC-FT 1,640

PEAK DISCHARGE (BASE, 600 CFS).--No peak above base.

NOTE.--No gage-height record Nov. 30 to Jan. 4.

11458350 TULUCAY CREEK AT NAPA, CALIF.

LOCATION.--Lat 38°17'09", long 122°16'29", in Tulucay Grant, Napa County, on left bank 150 ft downstream from bridge on State Highways 12 and 29 in Napa.

DRAINAGE AREA.--12.6 sq mi.

PERIOD OF RECORD.--October 1971 to September 1972.

GAGE.--Water-stage recorder. Datum of gage is 3.65 ft above mean sea level (levels by county of Napa).

EXTREMES.--Current year: Maximum discharge, 106 cfs Jan. 27 (gage height, 2.63 ft); minimum daily, 0.02 cfs Aug. 22, Sept. 8, 9.

REMARKS.--Records good. No regulation; some small diversions above station for irrigation.

DISCHARGE, IN CUBIC FEET PER SECOND, WATER YEAR OCTOBER 1971 TO SEPTEMBER 1972

DAY	OCT	NOV	DEC	JAN	FEB	MAR	APR	MAY	JUN	JUL	AUG	SEP
1	.06	.12	.44	4.1	6.1	2.6	.68	.28	.16	.10	.14	.06
2	.06	.12	1.6	3.7	4.5	2.4	.63	.26	.16	.10	.12	.04
3	.06	.12	1.0	2.9	4.1	2.9	.58	.24	.16	.12	.08	.04
4	.06	.12	.87	2.2	5.5	2.6	.53	.24	.16	.12	.08	.04
5	.06	.12	.80	2.1	27	2.4	1.7	.26	.16	.10	.06	.04
6	.10	.12	.74	2.1	22	2.2	1.8	.31	.16	.10	.03	.04
7	.06	.12	.63	2.1	15	2.2	1.0	.28	.16	.10	.03	.03
8	.06	.12	.58	1.8	11	1.8	.80	.28	.14	.10	.03	.02
9	.06	.14	.80	1.7	9.4	1.9	.80	.31	.31	.10	.03	.02
10	.08	.14	.68	1.7	7.7	1.9	.74	.28	.16	.10	.03	.03
11	.08	.93	.58	1.6	6.6	1.8	1.9	.26	.12	.10	.03	.04
12	.08	.31	5.6	1.5	5.5	1.7	2.3	.26	.12	.10	.03	.04
13	.08	2.5	1.6	1.5	5.0	1.7	1.6	.26	.12	.10	.03	.04
14	.08	.58	1.4	1.4	4.5	1.5	1.0	.24	.12	.08	.03	.04
15	.08	.48	1.1	1.3	4.1	1.5	.80	.24	.12	.08	.03	.04
16	.10	.40	.94	1.3	3.7	1.4	.74	.22	.12	.08	.03	.04
17	.10	.37	.87	1.2	3.3	1.2	.68	.22	.12	.08	.03	.04
18	.10	.40	.87	1.2	2.9	1.1	.63	.22	.12	.10	.03	.04
19	.08	.37	.80	1.1	2.6	1.0	.53	.22	.12	.10	.03	.03
20	.10	.37	.74	1.2	2.6	1.0	.48	.22	.12	.08	.03	.03
21	.10	.37	1.0	1.2	2.4	.94	.48	.32	.12	.08	.03	.03
22	.10	.37	6.1	1.3	4.1	.87	.48	.22	.12	.14	.02	.03
23	.10	.37	6.6	1.5	2.6	.74	.53	.22	.12	.18	.03	.04
24	.12	.37	6.9	1.5	3.7	.68	.58	.22	.12	.16	.03	.04
25	.12	.37	19	4.4	4.1	.68	.53	.22	.12	.14	.03	.21
26	.10	.44	16	3.9	3.7	.63	.44	.18	.12	.18	.04	.63
27	.10	.48	28	42	3.3	.63	.40	.18	.12	.22	.06	.20
28	.10	1.1	11	17	2.9	.63	.34	.18	.12	.20	.06	.08
29	.12	.53	8.8	11	2.9	.68	.34	.18	.12	.18	.04	.08
30	.12	.44	6.6	8.3	------	.63	.31	.18	.10	.16	.04	.08
31	.12	------	5.5	6.6	------	.68	------	.16	------	.14	.04	------
TOTAL	2.74	12.79	138.14	136.4	182.8	44.59	24.35	7.36	4.11	3.72	1.35	2.16
MEAN	.088	.43	4.46	4.40	6.30	1.44	.81	.24	.14	.12	.044	.072
MAX	.12	2.5	28	42	27	2.9	2.3	.32	.31	.22	.14	.63
MIN	.06	.12	.44	1.1	2.4	.63	.31	.16	.10	.08	.02	.02
AC-FT	5.4	25	274	271	363	88	48	15	8.2	7.4	2.7	4.3

WTR YR 1972 TOTAL 560.51 MEAN 1.53 MAX 42 MIN .02 AC-FT 1,110

PEAK DISCHARGE (BASE, 400 CFS).--No peak above base.

11458500 SONOMA CREEK AT AGUA CALIENTE, CALIF.

LOCATION.--Lat 38°19'24", long 122°29'36", in Agua Caliente Grant, Sonoma County, on left bank 20 ft upstream from bridge, and 0.4 mile west of Agua Caliente.

DRAINAGE AREA.--58.4 sq mi.

PERIOD OF RECORD.--February 1955 to current year. Prior to October 1966, published as "at Boyes Hot Springs."

GAGE.--Water-stage recorder. Altitude of gage is 120 ft (from topographic map). Prior to July 24, 1967, at site 0.8 mile downstream at different datum. July 24, 1967, to Oct. 9, 1968, at site 130 ft upstream at different datum.

AVERAGE DISCHARGE.--17 years, 71.3 cfs (51,660 acre-ft per year); median of yearly mean discharges, 66 cfs (47,800 acre-ft per year).

EXTREMES.--Current year: Maximum discharge, 622 cfs Dec. 27 (gage height, 5.02 ft); minimum daily, 0.05 cfs Sept. 15.

Period of record: Maximum discharge, 8,880 cfs Dec. 22, 1955 (gage height, 17.10 ft, site and datum then in use), from rating curve extended above 4,100 cfs on basis of slope-area measurement of maximum flow; no flow at times.

REMARKS.--Records good. No regulation; some diversion above station for irrigation of about 1,500 acres.

DISCHARGE, IN CUBIC FEET PER SECOND, WATER YEAR OCTOBER 1971 TO SEPTEMBER 1972

DAY	OCT	NOV	DEC	JAN	FEB	MAR	APR	MAY	JUN	JUL	AUG	SEP
1	.50	1.5	3.5	17	37	41	13	8.9	2.1	.50	.22	.31
2	.50	1.0	10	14	31	40	13	8.9	2.1	.50	.18	.22
3	.50	.94	8.1	11	37	44	13	8.6	1.9	.50	.22	.18
4	.50	.94	5.5	8.9	79	40	12	8.2	2.1	.50	.15	.12
5	.50	.78	4.1	9.8	204	36	16	8.9	2.0	1.0	.31	.12
6	.60	.78	3.5	10	153	34	20	9.3	1.5	.70	.41	.15
7	.70	.86	3.3	9.8	97	31	15	9.3	1.4	.50	.22	.15
8	.70	.86	3.1	9.4	72	28	14	8.6	1.4	.50	.18	.18
9	.80	.94	3.5	8.9	60	28	14	6.0	2.1	.50	.12	.18
10	.90	1.1	3.9	8.5	51	33	13	5.7	3.3	.40	.10	.10
11	.90	4.8	3.9	8.0	45	27	30	5.2	2.4	.31	.18	.10
12	.90	5.0	34	7.7	40	24	35	4.7	1.6	.18	.22	.12
13	1.0	13	13	7.7	37	23	29	4.2	1.5	.18	.12	.15
14	.37	4.5	6.2	7.7	33	22	20	3.8	1.4	.12	.12	.08
15	.16	3.1	4.5	7.3	31	20	17	3.6	1.2	.12	.22	.05
16	.16	2.3	4.1	7.0	29	18	15	3.6	1.1	.06	.31	.10
17	.19	2.3	3.5	7.0	27	18	15	3.6	1.2	.10	.22	.26
18	.42	2.5	3.5	6.3	26	18	13	3.6	1.1	.26	.51	.41
19	.58	2.3	3.3	6.6	25	18	13	3.8	1.1	.31	.56	.51
20	.94	2.3	3.1	6.6	25	17	12	4.2	1.1	.51	.36	.41
21	.86	2.5	4.1	23	26	17	12	4.7	.80	.46	.22	.22
22	.64	2.5	69	72	43	22	12	4.0	.66	.41	.31	.18
23	.78	2.9	36	194	37	18	11	4.0	.90	.36	.18	.15
24	.86	3.1	74	67	37	17	14	3.6	1.0	.31	.15	.10
25	.64	2.9	112	122	38	16	11	2.9	.86	.62	.31	.08
26	.52	3.3	109	72	37	15	10	2.3	.94	.31	.51	.36
27	.42	3.7	236	178	34	14	8.6	3.4	.76	.26	1.1	2.7
28	.58	6.6	61	92	37	14	8.2	3.1	.80	.18	1.7	1.6
29	.47	4.5	39	63	62	14	7.2	2.7	.68	.18	1.6	.96
30	.64	3.7	28	52	------	13	8.2	2.3	.50	.12	.96	.68
31	.86	------	22	44	------	12	------	2.1	------	.22	.51	------
TOTAL	19.09	87.50	917.7	1,158.2	1,490	732	444.2	157.8	41.50	11.18	12.48	10.93
MEAN	.62	2.92	29.6	37.4	51.4	23.6	14.8	5.09	1.38	.36	.40	.36
MAX	1.0	13	236	194	204	44	35	9.3	3.3	1.0	1.7	2.7
MIN	.16	.78	3.1	6.3	25	12	7.2	2.1	.50	.06	.10	.05
AC-FT	38	174	1,820	2,300	2,960	1,450	881	313	82	22	25	22

CAL YR 1971 TOTAL 9,211.65 MEAN 25.2 MAX 767 MIN .16 AC-FT 18,270
WTR YR 1972 TOTAL 5,082.58 MEAN 13.9 MAX 236 MIN .05 AC-FT 10,080

PEAK DISCHARGE (BASE, 2,300 CFS).--No peak above base.

11459500 NOVATO CREEK AT NOVATO, CALIF.

LOCATION.--Lat 38°06'28", long 122°34'44", in Novato Grant, Marin County, on left bank in Novato, 100 ft upstream from 7th Street Bridge.

DRAINAGE AREA.--17.6 sq mi.

PERIOD OF RECORD.--October 1946 to current year. Records of diversions for water years 1952-53, estimated. Prior to October 1966 published as "near Novato."

GAGE.--Water-stage recorder. Altitude of gage is 30 ft (from topographic map). Prior to Aug. 23, 1967, at site 0.6 mile upstream at different datum.

AVERAGE DISCHARGE (adjusted for diversion).--26 years, 12.0 cfs (8,690 acre-ft per year).

EXTREMES.--Current year: Maximum discharge, 248 cfs Dec. 26 (gage height, 4.55 ft); no flow many days. Period of record: Maximum discharge, 2,000 cfs Jan. 14, 1970 (gage height, 11.01 ft); no flow many days in each year.

REMARKS.--Records good except those for period of indefinite stage-discharge relation, which are fair. Flow regulated by Stafford Lake beginning Dec. 1, 1951 (capacity, 4,500 acre-ft since Oct. 18, 1954); contents, 2,720 acre-ft Sept. 30, 1971, and 1,490 acre-ft Sept. 30, 1972. Diversion from Stafford Lake for municipal water supply began Apr. 25, 1952, and amounted to 1,940 acre-ft for the current year.

COOPERATION.--Record of diversions furnished by North Marin County Water District.

DISCHARGE, IN CUBIC FEET PER SECOND, WATER YEAR OCTOBER 1971 TO SEPTEMBER 1972

DAY	OCT	NOV	DEC	JAN	FEB	MAR	APR	MAY	JUN	JUL	AUG	SEP
1	.11	0	.15	3.1	1.8	2.2	.48	.35	.16	.12		0
2	.04	0	9.2	2.8	1.4	2.0	.59	.40	.16	.20		0
3	.11	.01	3.8	2.6	5.3	2.0	.48	.45	.15	.16		0
4	.07	.07	.59	2.2	15	1.6	.48	.44	.15	.04		0
5	0	0	.37	2.0	102	1.4	2.0	.42	.14	.02		0
6	0	.11	.37	1.8	31	1.4	.70	.40	.14	.02		0
7	0	0	.29	1.6	17	1.3	.29	.37	.13	.07		0
8	0	0	.21	1.4	12	1.3	.29	.35	.13	.07		0
9	0	.07	.83	1.4	9.2	1.3	.37	.32	.12	.04		0
10	0	.07	.96	1.3	7.3	1.1	.37	.29	.11	.11		0
11	0	6.9	.37	1.4	5.9	.83	3.8	.29	.11	0		0
12	0	3.8	12	1.4	5.3	.83	1.3	.28	.11	0		0
13	0	4.4	.70	1.3	4.7	.83	.48	.28	.10	0		0
14	0	.37	.48	1.1	4.1	.83	.37	.27	.10	0		0
15	0	.37	.37	1.1	3.6	.83	.37	.26	.10	0		0
16	0	.21	.37	1.1	3.3	.83	.37	.24	.10	0		0
17	0	.29	.37	.96	3.1	.70	.37	.23	.09	0		0
18	0	.37	.37	.96	2.6	.70	.37	.21	.09	.02		0
19	0	.37	.37	1.1	2.4	.70	.48	.20	.09	.07		0
20	0	.37	.29	1.1	2.4	.70	.48	.20	.09	.05		0
21	0	.37	2.2	1.4	2.2	.70	.48	.21	.13	.07		0
22	0	.48	19	1.1	4.7	1.4	.48	.21	.11	.11		0
23	0	.48	4.1	1.8	2.4	.59	.59	.22	.11	.01		0
24	0	.48	18	.83	2.6	.59	1.1	.22	.10	0		0
25	0	.37	34	6.9	2.4	.59	.37	.20	.10	.09		0
26	0	.48	49	1.8	2.2	.59	.37	.20	.10	.04		.89
27	0	.37	46	17	2.2	.59	.29	.19	.09	0		.14
28	0	5.9	12	3.8	2.2	.59	.29	.18	.09	.38		0
29	0	.48	6.6	2.6	3.1	.59	.29	.18	.09	.10		0
30	0	.29	4.7	2.2	------	.48	.29	.17	.09	.06		0
31	0	------	3.8	2.0	------	.48	------	.17	------	.11		------
TOTAL	.33	27.48	231.86	73.15	263.4	30.57	18.99	8.40	3.38	1.96	0	1.03
MEAN	.011	.92	7.48	2.36	9.08	.99	.63	.27	.11	.063	0	.034
MAX	.11	6.9	49	17	102	2.2	3.8	.45	.16	.38	0	.89
MIN	0	0	.15	.83	1.4	.48	.29	.17	.09	0	0	0
AC-FT	.7	55	460	145	522	61	38	17	6.7	3.9	0	2.0

CAL YR 1971 TOTAL 1,398.24 MEAN 3.83 MAX 65 MIN 0 AC-FT 2,770
WTR YR 1972 TOTAL 660.55 MEAN 1.80 MAX 102 MIN 0 AC-FT 1,310

NOTE.--Stage-discharge relation indefinite Apr. 30 to July 3.

11459800 SAN RAFAEL CREEK AT SAN RAFAEL, CALIF.

LOCATION.--Lat 37°58'22", long 122°32'07", in San Pedro Santa Margarita Las Gallinas Grant, Marin County, on left bank 22 ft upstream from culvert at intersection of Second and Third Streets in town of San Rafael.

DRAINAGE AREA.--1.24 sq mi.

PERIOD OF RECORD.--November 1971 to March 1972 (seasonal records only).

GAGE.--Water-stage recorder. Datum of gage is 15.56 ft above mean sea level. Recording rain gage at City Hall 0.3 mile northeast of gage.

EXTREMES.--Maximum discharge during period, 80 cfs Feb. 5 (gage height, 2.55 ft); minimum daily, 0.26 cfs Jan. 12.

REMARKS.--Records good. Low flow affected by return flow from urban irrigation. Records for suspended-sediment discharge for the current year are published in Part 2 of this report.

DISCHARGE, IN CUBIC FEET PER SECOND, NOVEMBER 1971 TO MARCH 1972

DAY	OCT	NOV	DEC	JAN	FEB	MAR	APR	MAY	JUN	JUL	AUG	SEP
1		-	.33	.64	.45	.46						
2		-	1.6	.56	.45	.46						
3		-	1.3	.56	.97	.43						
4		-	.52	.50	3.1	.40						
5		-	.40	.50	20	.40						
6		.27	.42	.50	2.5	-						
7		.27	.40	.50	1.5	-						
8		.29	.42	.47	1.1	-						
9		.27	.61	.45	.98	-						
10		.27	.68	.45	.78	-						
11		2.1	.35	.45	.70	-						
12		1.7	4.9	.26	.64	-						
13		2.0	.77	.58	.68	-						
14		.44	.58	.35	.57	-						
15		.39	.49	.35	.54	-						
16		.33	.45	.35	.53	-						
17		.34	.45	.35	.50	-						
18		.33	.43	.35	.46	-						
19		.32	.40	.35	.45	-						
20		.32	.40	.33	.46	-						
21		.32	1.2	.32	.94	-						
22		.32	3.7	.52	.72	-						
23		.31	1.4	.53	1.2	-						
24		.31	2.7	.36	1.1	-						
25		.32	4.8	3.0	.63	-						
26		.32	2.8	1.7	.55	-						
27		.33	2.5	4.6	.51	-						
28		.86	1.2	.82	.71	-						
29		.34	.92	.59	.56	-						
30		.35	.79	.50	------	-						
31		------	.71	.51	------	-	------		------			------
TOTAL	-	-	38.62	22.30	44.28	-	-	-	-	-	-	-
MEAN	-	-	1.25	.72	1.53	-	-	-	-	-	-	-
MAX	-	-	4.9	4.6	20	-	-	-	-	-	-	-
MIN	-	-	.33	.26	.45	-	-	-	-	-	-	-
AC-FT	-	-	77	44	88	-	-	-	-	-	-	-
(a)	.04	3.64	7.87	1.81	4.47	.63	2.61	0	.18	0	0	.57

a Precipitation, in inches.

11459830 IRWIN CREEK AT SAN RAFAEL, CALIF.

LOCATION.--Lat 37°58'56", long 122°30'50", in San Pedro Santa Margarita Las Gallinas Grant Marin County, on right bank at end of Linden Lane in San Rafael.

DRAINAGE AREA.--0.69 sq mi.

PERIOD OF RECORD.--November 1971 to March 1972 (seasonal records only).

GAGE.--Water-stage recorder. Altitude of gage is 75 ft (from topographic map).

EXTREMES.--Maximum discharge recorded during period, 4.8 cfs Feb. 5 (gage height, 1.60 ft).

REMARKS.--Records good. Low flow affected by return flow from urban irrigation. Records of suspended-sediment discharge for the current year are published in Part 2 of this report.

DISCHARGE, IN CUBIC FEET PER SECOND, NOVEMBER 1971 TO MARCH 1972

DAY	OCT	NOV	DEC	JAN	FEB	MAR	APR	MAY	JUN	JUL	AUG	SEP
1		-	0	-	.01	.01						
2		-	.12	-	0	.01						
3		-	.01	-	0	.01						
4		-	0	-	.06	.01						
5		-	-	-	1.6	.01						
6		-	-	-	.22	-						
7		-	-	-	.11	-						
8		-	-	-	.09	-						
9		-	-	-	.07	-						
10		0	-	-	.06	-						
11		.14	-	-	.04	-						
12		.10	-	-	.04	-						
13		.22	-	-	.04	-						
14		0	-	-	.04	-						
15		-	-	-	.03	-						
16		-	-	-	.02	-						
17		-	-	-	.02	-						
18		-	-	-	.02	-						
19		-	-	-	.02	-						
20		-	-	-	.02	-						
21		-	-	-	.05	-						
22		-	-	-	.06	-						
23		-	-	-	.04	-						
24		-	-	0	.07	-						
25		-	-	.16	.04	-						
26		-	-	.06	.02	-						
27		-	-	.38	.02	-						
28		-	-	.01	.02	-						
29		-	-	.01	.03	-						
30		-	-	.01	------	-						
31		------	-	.01	------	-	------		------			------
TOTAL		-	-	-	2.86	-						
MEAN		-	-	-	.099	-						
MAX		-	-	-	1.6	-						
MIN		-	-	-	0	-						
AC-FT		-	-	-	5.7	-						

11460000 CORTE MADERA CREEK AT ROSS, CALIF.

LOCATION.--Lat 37°57'45", long 122°33'20", in Punta de Quentin Grant, Marin County, on left bank behind fire station at Ross, 1.7 miles southwest of San Rafael, and 4 miles upstream from mouth.

DRAINAGE AREA.--18.1 sq mi.

PERIOD OF RECORD.--February 1951 to current year.

GAGE.--Water-stage recorder. Datum of gage is 7.97 ft above mean sea level (levels by Corps of Engineers).

AVERAGE DISCHARGE.--21 years, 27.4 cfs (19,850 acre-ft per year).

EXTREMES.--Current year: Maximum discharge, 908 cfs Dec. 12 (gage height, 8.90 ft); minimum daily, 0.06 cfs Oct. 1-5.
Period of record: Maximum discharge, 3,620 cfs Dec. 22, 1955 (gage height, 17.45 ft); no flow at times.

REMARKS.--Records good. Flow regulated by Phoenix Lake 1.7 miles upstream (capacity, 612 acre-ft). Diversion on tributary above station by Marin Municipal Water District.

DISCHARGE, IN CUBIC FEET PER SECOND, WATER YEAR OCTOBER 1971 TO SEPTEMBER 1972

DAY	OCT	NOV	DEC	JAN	FEB	MAR	APR	MAY	JUN	JUL	AUG	SEP
1	.06	2.1	.50	12	9.1	9.7	1.7	2.7	1.0	.36	.28	.23
2	.06	3.3	35	11	7.5	8.6	1.4	2.7	1.0	.52	.28	.23
3	.06	.30	3.7	9.9	12	8.6	1.7	2.3	1.0	.44	.44	.28
4	.06	.20	1.0	7.5	32	6.4	1.7	2.3	1.0	.36	.36	.19
5	.06	.20	.65	6.7	601	6.4	24	2.7	1.0	.36	.36	.19
6	.10	.20	.80	6.7	182	6.4	4.5	2.3	.82	.36	.28	.23
7	.20	.30	.80	6.7	81	5.3	2.3	2.3	.82	.36	.28	.19
8	.15	.50	.80	6.0	55	5.3	2.0	2.3	.82	.36	.19	.19
9	.15	.65	1.8	4.8	44	8.6	2.0	2.0	1.7	.28	.23	.28
10	.20	.65	2.1	4.8	35	8.6	2.0	2.0	1.0	.36	.23	.15
11	.30	26	.80	4.8	30	6.4	37	2.0	.70	.36	.23	.15
12	.30	3.7	184	4.8	26	5.3	80	2.0	.70	.28	.19	.15
13	.40	19	9.9	4.8	23	5.3	28	1.7	.60	.28	.23	.79
14	.40	.40	3.7	4.8	20	5.3	16	1.7	.60	.28	.23	.23
15	.40	.40	2.9	4.2	16	5.3	12	1.7	.60	.36	.23	.15
16	.50	.80	2.9	4.2	15	5.3	9.7	1.7	.52	.28	.27	.19
17	.65	.80	2.5	4.8	14	5.3	7.5	1.7	.60	.28	.28	.19
18	.65	.80	2.5	4.8	11	5.3	6.4	1.4	.52	.36	.23	.23
19	.65	1.0	2.5	4.8	9.7	5.3	4.5	1.7	.52	.44	.25	.23
20	.65	1.2	2.1	4.8	9.7	4.5	3.9	1.4	.52	.44	.19	.28
21	1.0	1.2	9.1	4.2	11	2.7	3.9	1.4	.52	.44	.23	.23
22	.65	2.9	98	5.4	14	12	3.9	1.4	.60	.44	.20	.23
23	.65	7.5	20	7.5	15	2.3	4.5	1.4	.60	.36	.15	.36
24	.65	4.2	99	4.8	15	2.0	13	1.4	.60	.36	.12	.23
25	.50	2.9	216	27	9.7	2.0	3.9	1.2	.52	.28	.13	3.5
26	.40	3.3	148	19	9.7	2.0	3.5	1.2	.52	.28	.15	3.7
27	.40	4.2	240	95	8.6	2.0	3.1	1.2	.52	.23	.15	2.7
28	.30	6.7	46	29	12	1.7	3.1	1.2	.44	.23	.19	.31
29	.30	2.1	27	20	15	1.7	3.1	1.2	.44	.23	.19	.21
30	.40	.50	19	15	------	1.7	2.7	1.2	.44	.28	.36	.18
31	.80	------	16	12	------	1.7	------	1.0	------	.28	.23	------
TOTAL	12.05	98.00	1,199.05	361.8	1,343.0	159.0	293.0	54.4	21.24	10.53	7.36	16.40
MEAN	.39	3.27	38.7	11.7	46.3	5.13	9.77	1.75	.71	.34	.24	.55
MAX	1.0	26	240	95	601	12	80	2.7	1.7	.52	.44	3.7
MIN	.06	.20	.50	4.2	7.5	1.7	1.4	1.0	.44	.23	.12	.15
AC-FT	24	194	2,380	718	2,660	315	581	108	42	21	15	33

CAL YR 1971 TOTAL 3,717.50 MEAN 10.2 MAX 243 MIN .06 AC-FT 7,370
WTR YR 1972 TOTAL 3,575.83 MEAN 9.77 MAX 601 MIN .06 AC-FT 7,090

PEAK DISCHARGE (BASE, 1,000 CFS).--No peak above base.

11460100 ARROYO CORTE MADERA DEL PRESIDIO AT MILL VALLEY, CALIF.

LOCATION.--Lat 37°53'50", long 122°32'06", in Sausalito Grant, Marin County, on right bank near south boundary of town of Mill Valley, 1 mile upstream from mouth.

DRAINAGE AREA.--4.69 sq mi.

PERIOD OF RECORD.--October 1965 to current year.

GAGE.--Water-stage recorder. Datum of gage is 1.85 ft above mean sea level.

AVERAGE DISCHARGE.--7 years, 6.95 cfs (5,040 acre-ft per year).

EXTREMES.--Current year: Maximum discharge, 160 cfs Feb. 5 (gage height, 4.60 ft); minimum daily, 0.05 cfs Oct. 27.
Period of record: Maximum discharge, 1,180 cfs Jan. 21, 1970 (gage height, 7.52 ft); no flow for several days in 1968.

REMARKS.--Records good. No regulation or diversion above station.

DISCHARGE, IN CUBIC FEET PER SECOND, WATER YEAR OCTOBER 1971 TO SEPTEMBER 1972

DAY	OCT	NOV	DEC	JAN	FEB	MAR	APR	MAY	JUN	JUL	AUG	SEP
1	.26	.11	.58	2.3	3.6	6.0	1.0	.84	.64	.47	.18	.13
2	.23	.13	3.2	2.0	3.0	5.0	1.0	.84	.70	.42	.18	.11
3	.17	.13	6.4	1.8	2.7	4.6	1.0	.84	.70	.37	.26	.13
4	.20	.13	2.2	1.5	4.4	3.9	1.0	.84	.64	.33	.24	.11
5	.20	.13	1.3	1.4	106	3.5	1.4	.77	.64	.33	.22	.11
6	.17	.13	.96	1.4	43	3.0	1.4	.77	.52	.29	.20	.11
7	.20	.09	.70	1.3	19	2.7	1.0	.96	.52	.29	.18	.11
8	.20	.11	.64	1.2	13	2.6	.96	.77	.58	.23	.16	.11
9	.17	.13	2.6	1.1	9.0	2.7	.96	.70	2.0	.17	.17	.13
10	.17	.13	2.2	1.1	6.8	2.6	.84	.70	1.0	.15	.18	.13
11	.17	2.3	1.2	1.0	5.4	2.4	4.4	.64	.64	.17	.17	.13
12	.15	2.9	30	1.0	4.4	2.2	10	.52	.58	.17	.16	.13
13	.13	9.2	4.6	.96	3.8	2.1	4.2	.37	.84	.20	.17	.13
14	.11	1.0	3.9	.96	3.3	1.9	2.9	.52	.42	.13	.18	.13
15	.11	.52	2.2	.84	3.0	3.0	2.4	.52	.42	.11	.15	.15
16	.11	.37	1.7	.77	2.7	1.8	2.0	.52	.37	.13	.17	.15
17	.11	.64	1.4	.77	2.6	1.7	1.9	.52	.37	.17	.20	.13
18	.09	.58	1.3	.77	2.4	1.5	1.7	.58	.37	.17	.17	.13
19	.09	4.4	1.1	.77	2.3	1.4	1.5	.58	.42	.15	.20	.15
20	.26	.20	1.0	1.7	2.3	1.4	1.4	.64	.42	.15	.20	.15
21	.64	.29	2.0	4.4	2.4	1.4	1.4	.64	.37	.20	.17	.15
22	.47	.52	5.6	19	2.7	2.6	1.4	.58	.42	.17	.15	.13
23	.26	1.1	3.2	26	2.2	1.5	1.5	.58	.52	.20	.13	.13
24	.06	.42	12	10	3.6	1.4	5.6	.64	.42	.17	.11	.13
25	.08	.23	27	8.0	2.6	1.3	1.7	.70	.37	.20	.11	.17
26	.07	1.1	13	7.5	2.3	1.2	1.4	.70	.42	.20	.13	1.6
27	.05	.84	12	16	2.2	1.2	1.2	.77	.42	.17	.11	1.6
28	.09	7.0	6.6	12	6.0	1.1	1.1	.77	.37	.15	.17	.47
29	.09	1.4	4.4	7.5	8.2	1.0	1.0	.70	.37	.15	.13	.33
30	.08	.77	3.3	5.6	------	1.0	.96	.64	.58	.18	.11	.23
31	.11	------	2.7	4.4	------	1.0	------	.64	------	.18	.11	------
TOTAL	5.30	37.00	160.98	145.04	274.9	70.7	60.22	20.80	17.05	6.57	5.17	7.50
MEAN	.17	1.23	5.19	4.68	9.48	2.28	2.01	.67	.57	.21	.17	.25
MAX	.64	9.2	30	26	106	6.0	10	.96	2.0	.47	.26	1.6
MIN	.05	.09	.58	.77	2.2	1.0	.84	.37	.37	.11	.11	.11
AC-FT	11	73	319	288	545	140	119	41	34	13	10	15

CAL YR 1971 TOTAL 1,234.89 MEAN 3.38 MAX 96 MIN .05 AC-FT 2,450
WTR YR 1972 TOTAL 811.23 MEAN 2.22 MAX 106 MIN .05 AC-FT 1,610

PEAK DISCHARGE (BASE, 220 CFS).--No peak above base.

11460800 WALKER CREEK NEAR TOMALES, CALIF.

LOCATION.--Lat 38°12'35", long 122°51'35", in Nicasio Grant, Marin County, on left bank 1,300 ft upstream from Chileno Creek, and 3.5 miles southeast of Tomales.

DRAINAGE AREA.--37.1 sq mi.

PERIOD OF RECORD.--June 1959 to current year.

GAGE.--Water-stage recorder and concrete control. Datum of gage is 56.74 ft above mean sea level.

AVERAGE DISCHARGE.--13 years, 42.6 cfs (30,860 acre-ft per year); median of yearly mean discharges, 37 cfs (26,900 acre-ft per year).

EXTREMES.--Current year: Maximum discharge, 1,430 cfs Feb. 5 (gage height, 13.03 ft); no flow many days.
Period of record: Maximum discharge, 5,420 cfs Jan. 5, 1966 (gage height, 22.23 ft); no flow many days in each year.

REMARKS.--Records good. No regulation; small diversions above station for irrigation of about 100 acres and stock watering. Records of suspended-sediment discharge for the current year are published in Part 2 of this report.

REVISIONS (WATER YEARS).--WRD Calif. 1969: 1967-68.

DISCHARGE, IN CUBIC FEET PER SECOND, WATER YEAR OCTOBER 1971 TO SEPTEMBER 1972

DAY	OCT	NOV	DEC	JAN	FEB	MAR	APR	MAY	JUN	JUL	AUG	SEP
1		0	0	23	31	17	4.5	1.1	.24	.02	.01	
2		0	.71	19	26	17	4.7	1.1	.19	.04	.01	
3		0	3.8	17	40	19	4.5	.99	.19	.04	.01	
4		0	2.8	12	161	18	4.5	1.1	.19	.02	.01	
5		0	1.2	11	927	17	6.2	1.3	.15	.04	.01	
6		0	1.1	12	426	15	6.5	1.2	.12	.04	.01	
7		0	.71	11	198	14	4.5	1.1	.12	.04	0	
8		0	.44	9.8	121	14	3.6	.99	.10	.02	0	
9		0	.71	8.6	92	13	3.2	.89	.12	.02	0	
10		0	1.7	8.2	66	13	2.8	.89	.10	.02	0	
11		0	1.8	7.8	50	13	5.5	.89	.10	.02	.01	
12		0	11	7.8	41	12	7.0	.70	.10	.02	.01	
13		0	6.2	7.8	35	11	8.5	.61	.08	.02	0	
14		0	3.5	7.0	30	10	5.5	.53	.08	.02	0	
15		0	2.8	6.2	25	10	4.2	.53	.08	.02	0	
16		0	2.2	6.2	23	9.4	3.6	.46	.06	.02	0	
17		0	2.0	5.8	21	8.8	3.4	.53	.06	.01	0	
18		0	1.7	5.4	19	8.2	3.0	.46	.06	.01	0	
19		0	1.3	5.0	17	7.6	2.6	.46	.06	.01	0	
20		0	1.3	5.4	16	7.3	2.3	.46	.06	.02	0	
21		0	1.5	7.4	16	7.0	2.4	.46	.06	.01	0	
22		0	40	15	24	9.7	2.1	.53	.06	.01	0	
23		0	31	46	18	8.5	1.9	.46	.06	.01	0	
24		0	55	25	16	7.3	3.4	.46	.06	.01	0	
25		0	237	84	17	7.3	2.6	.40	.06	.01	0	
26		0	214	79	16	6.2	2.1	.34	.04	.01	0	
27		0	440	179	15	5.5	1.8	.40	.04	.01	0	
28		.04	127	104	15	5.2	1.8	.40	.04	.01	0	
29		.01	67	69	22	5.0	1.3	.34	.04	.01	0	
30		0	41	48	------	4.7	1.2	.29	.04	.01	0	
31		------	30	36	------	4.5	------	.24	------	.01	0	------
TOTAL	0	.05	1,330.47	888.4	2,524	325.2	111.2	20.61	2.76	.58	.08	0
MEAN	0	.002	42.9	28.7	87.0	10.5	3.71	.66	.092	.019	.003	0
MAX	0	.04	440	179	927	19	8.5	1.3	.24	.04	.01	0
MIN	0	0	0	5.0	15	4.5	1.2	.24	.04	.01	0	0
AC-FT	0	.1	2,640	1,760	5,010	645	221	41	5.5	1.2	.2	0

CAL YR 1971 TOTAL 7,278.77 MEAN 19.9 MAX 725 MIN 0 AC-FT 14,440
WTR YR 1972 TOTAL 5,203.35 MEAN 14.2 MAX 927 MIN 0 AC-FT 10,320

PEAK DISCHARGE (BASE, 2,000 CFS).--No peak above base.

11460920 SALMON CREEK AT BODEGA, CALIF.

LOCATION.--Lat 38°20'54", long 122°58'45", in Estero Americano Grant, Sonoma County, on left bank 100 ft upstream from private road bridge, 0.3 mile upstream from small left-bank tributary, and 0.4 mile northwest of Bodega.

DRAINAGE AREA.--15.7 sq mi.

PERIOD OF RECORD.--July 1962 to current year.

GAGE.--Water-stage recorder. Datum of gage is 81.03 ft above mean sea level.

AVERAGE DISCHARGE.--10 years, 21.4 cfs (15,500 acre-ft per year).

EXTREMES.--Current year: Maximum discharge, 537 cfs Feb. 5 (gage height, 9.09 ft); no flow many days.
Period of record: Maximum discharge, 1,960 cfs Jan. 5, 1966 (gage height, 18.89 ft), from rating curve extended above 800 cfs; no flow many days in each year.

REMARKS.--Records good. No regulation or diversion above station. Records of water temperatures and suspended-sediment discharge for the current year are published in Part 2 of this report.

DISCHARGE, IN CUBIC FEET PER SECOND, WATER YEAR OCTOBER 1971 TO SEPTEMBER 1972

DAY	OCT	NOV	DEC	JAN	FEB	MAR	APR	MAY	JUN	JUL	AUG	SEP
1	0	.16	.60	6.2	11	21	3.5	1.6	.50	.12		
2	0	.36	.46	5.4	9.3	24	3.3	1.5	.55	.33		
3	0	1.0	6.0	4.8	11	25	3.2	1.5	.50	.27		
4	0	.30	4.5	3.9	50	18	3.2	1.6	.55	.30		
5	0	.27	1.5	3.2	330	14	6.4	1.6	.39	.30		
6	0	.27	1.4	3.2	99	12	8.5	1.6	.24	.27		
7	0	.24	.94	3.1	47	11	4.7	1.3	.33	.33		
8	0	.24	.73	2.8	29	9.8	3.9	1.2	.30	.36		
9	0	.30	1.5	2.7	22	10	3.6	1.1	.50	.36		
10	0	.36	2.7	2.5	17	15	3.3	1.1	.66	.27		
11	.03	1.5	1.5	2.4	14	12	8.7	.94	.39	.09		
12	.08	2.5	25	2.4	12	9.8	13	.94	.30	.08		
13	.08	6.2	7.6	2.3	11	8.7	11	.87	.22	.03		
14	.08	2.9	4.4	2.1	9.6	7.8	6.6	.66	.20	.01		
15	.02	1.2	3.3	2.0	8.7	7.2	5.3	.73	.20	0		
16	.02	.66	2.5	2.0	8.0	6.6	4.7	.87	.20	0		
17	.01	.50	2.2	2.0	7.6	6.0	4.1	.94	.18	0		
18	.01	.55	2.1	1.9	7.0	5.6	3.8	.87	.22	0		
19	.16	.50	1.9	2.0	6.6	5.3	3.5	.73	.33	0		
20	.94	.50	1.9	5.0	8.9	5.0	3.2	.73	.46	0		
21	.80	.55	2.3	29	8.0	5.0	3.1	.94	.39	0		
22	.46	.66	13	74	19	9.1	2.9	.94	.46	0		
23	.66	.73	7.2	138	13	7.0	2.7	.87	.55	.03		
24	.60	.73	11	31	11	5.8	4.4	.73	.50	.06		
25	.87	.80	32	60	11	6.0	3.2	.60	.39	.03		
26	.36	1.2	30	33	11	5.0	2.7	.66	.30	.03		
27	.24	2.4	83	57	9.8	4.5	2.3	.80	.20	.03		
28	.20	6.4	19	26	35	4.2	1.9	.87	.20	.02		
29	.20	2.1	12	18	49	4.1	1.9	.73	.16	.02		
30	.15	.87	8.9	14	------	3.8	1.6	.60	.16	.02		
31	.18	------	7.4	12	------	3.6	------	.50	------	.01		------
TOTAL	6.15	36.95	298.03	553.9	885.5	291.9	134.2	30.62	10.53	3.37	0	0
MEAN	.20	1.23	9.61	17.9	30.5	9.42	4.47	.99	.35	.11	0	0
MAX	.94	6.4	83	138	330	25	13	1.6	.65	.36	0	0
MIN	0	.16	.46	1.9	6.6	3.6	1.6	.50	.16	0	0	0
AC-FT	12	73	591	1,100	1,760	579	266	61	21	6.7	0	0

CAL YR 1971 TOTAL 4,125.31 MEAN 11.3 MAX 727 MIN 0 AC-FT 8,180
WTR YR 1972 TOTAL 2,251.15 MEAN 6.15 MAX 330 MIN 0 AC-FT 4,470

PEAK DISCHARGE (BASE, 1,000 CFS).--No peak above base.

11461000 RUSSIAN RIVER NEAR UKIAH, CALIF.

LOCATION.--Lat 39°11'44", long 123°11'38", in Yokayo Rancho Grant, Mendocino County, on right bank 20 ft downstream from bridge on Lake Mendocino Drive, 0.4 mile upstream from East Fork, 0.6 mile downstream from York Creek, and 3.2 miles north of Ukiah. Prior to Nov. 9, 1971, at site 0.6 mile upstream.

DRAINAGE AREA.--100 sq mi. Area at site prior to Nov. 9, 1971, 99.7 sq mi.

PERIOD OF RECORD.--August 1911 to September 1913, October 1952 to current year. Monthly discharge only for some periods, published in WSP 1315-B.

GAGE.--Water-stage recorder. Altitude of gage is 600 ft above mean sea level. Prior to October 1952, nonrecording gage at bridge 20 ft upstream at different datum. Oct. 1, 1952, to Nov. 8, 1971, water-stage recorder at site 0.6 mile upstream at different datums.

AVERAGE DISCHARGE.--22 years, 175 cfs (126,800 acre-ft per year); median of yearly mean discharges, 160 cfs (116,000 acre-ft per year).

EXTREMES.--Current year: Maximum discharge, 4,720 cfs Jan. 22 (gage height, 14.82 ft); no flow for many days.
Period of record: Maximum discharge, 18,900 cfs Dec. 21, 1955 (gage height, 19.0 ft, site and datum then in use); no flow at times in 1911, 1952-53, 1960-61, 1964-65, 1970-72.

REMARKS.--Records good. No regulation; small diversions above station for irrigation of about 300 acres.

DISCHARGE, IN CUBIC FEET PER SECOND, WATER YEAR OCTOBER 1971 TO SEPTEMBER 1972

DAY	OCT	NOV	DEC	JAN	FEB	MAR	APR	MAY	JUN	JUL	AUG	SEP
1	.55	.35	30	77	160	454	70	33	8.4	6.0	.02	0
2	.45	.35	108	66	131	780	67	33	8.1	5.9	.05	0
3	.35	.35	203	56	122	900	62	30	8.5	4.2	.04	0
4	.35	.35	140	49	233	538	57	28	8.9	5.4	0	0
5	.25	.35	77	44	311	371	80	26	8.5	6.3	0	0
6	.25	.45	187	40	230	278	107	24	7.2	4.1	0	.02
7	.25	.45	85	37	179	216	83	25	6.6	.21	.02	.03
8	.21	.35	50	33	150	177	68	26	6.5	2.6	0	.03
9	.15	.35	113	29	129	154	60	23	7.4	4.6	0	.03
10	.12	.47	173	26	113	154	58	21	9.3	4.3	0	.04
11	.08	2.4	141	24	100	145	99	21	8.4	.10	0	.04
12	.08	5.6	615	23	90	125	510	19	7.8	.10	.01	.04
13	.06	14	208	21	83	112	362	17	7.0	.01	0	.05
14	.05	10	119	20	78	101	213	15	6.1	0	0	.05
15	.06	5.4	90	18	73	92	161	14	5.4	0	0	.05
16	.10	3.1	64	17	68	86	128	14	4.6	0	.01	.06
17	.08	2.5	50	16	65	80	104	15	3.6	.01	0	.06
18	.10	1.9	41	15	62	74	90	15	3.5	.05	0	.06
19	.08	1.6	32	21	59	68	79	15	2.7	.05	0	.06
20	.12	1.6	26	34	74	65	71	23	2.6	.08	0	.06
21	.15	1.6	28	915	69	62	68	24	2.4	.04	0	.16
22	.12	1.3	498	1,640	218	167	64	21	4.2	.01	0	0
23	.29	1.2	287	2,010	434	131	61	18	7.8	.05	0	0
24	.29	1.2	430	526	615	152	74	16	7.3	0	0	.03
25	.29	1.2	356	516	650	188	63	14	7.2	0	0	.07
26	.29	11	365	338	930	133	56	13	7.8	.06	0	.12
27	.29	32	406	332	514	111	52	12	6.0	.07	0	.12
28	.29	111	214	299	720	97	46	11	4.2	0	0	.11
29	.29	90	151	272	765	87	37	11	2.4	.02	0	.10
30	.29	55	114	227	------	79	35	9.9	2.8	0	.02	.09
31	.35	------	92	193	------	74	------	8.9	------	.01	0	------
TOTAL	6.68	357.42	5,493	7,936	7,425	6,251	3,085	595.8	183.2	44.27	.17	1.48
MEAN	.22	11.9	177	256	256	202	103	19.2	6.11	1.43	.006	.049
MAX	.55	111	615	2,010	930	900	510	33	9.3	6.3	.05	.16
MIN	.05	.35	26	15	59	62	35	8.9	2.4	0	0	0
AC-FT	13	709	10,900	15,740	14,730	12,400	6,120	1,180	363	88	.3	2.9

CAL YR 1971 TOTAL 48,395.47 MEAN 133 MAX 6,050 MIN .05 AC-FT 95,990
WTR YR 1972 TOTAL 31,379.02 MEAN 85.7 MAX 2,010 MIN 0 AC-FT 62,240

PEAK DISCHARGE (BASE, 4,000 CFS).--Jan. 22 (2230) 4,720 cfs (14.82 ft).

11461500 EAST FORK RUSSIAN RIVER NEAR CALPELLA, CALIF.

LOCATION.--Lat 39°14'48", long 123°07'45", in NW¼NW¼ sec.18, T.16 N., R.11 W., Mendocino County, on left bank 0.1 mile downstream from Cold Creek, and 3.9 miles east of Calpella.

DRAINAGE AREA.--92.2 sq mi.

PERIOD OF RECORD.--October 1941 to current year. Monthly discharge only for some periods, published in WSP 1315-B.

GAGE.--Water-stage recorder. Datum of gage is 787.87 ft above mean sea level. Prior to May 28, 1957, at site 1.3 miles downstream at different datum. May 28, 1957, to Apr. 5, 1966, at site 0.4 mile downstream at same datum.

AVERAGE DISCHARGE.--31 years, 338 cfs (244,900 acre-ft per year).

EXTREMES.--Current year: Maximum discharge, 3,010 cfs Jan. 22 (gage height, 12.08 ft); minimum daily, 17 cfs Oct. 30.
Period of record: Maximum discharge, 18,700 cfs Dec. 22, 1964 (gage height, 20.21 ft); minimum daily, 3.8 cfs Oct. 30, 31, 1959.

REMARKS.--Records good. Flow greatly affected by diversion from Eel River through Potter Valley powerhouse (see sta 11471000). Diversion for irrigation of about 1,000 acres above station. Records of water temperatures for the current year are published in Part 2 of this report.

DISCHARGE, IN CUBIC FEET PER SECOND, WATER YEAR OCTOBER 1971 TO SEPTEMBER 1972

DAY	OCT	NOV	DEC	JAN	FEB	MAR	APR	MAY	JUN	JUL	AUG	SEP
1	195	209	248	355	405	429	353	303	94	31	250	115
2	195	211	283	350	384	623	350	300	96	30	255	118
3	195	205	325	345	358	651	290	260	93	42	258	126
4	189	199	288	333	535	557	268	255	96	44	263	126
5	195	191	265	330	504	489	264	265	87	37	270	149
6	200	207	265	335	411	441	333	280	102	33	285	293
7	205	209	223	263	368	393	318	278	100	27	267	290
8	215	207	221	288	348	320	303	208	108	27	100	300
9	170	145	270	330	330	320	308	280	111	47	132	303
10	160	82	318	328	318	396	263	288	114	44	109	303
11	162	76	318	330	305	402	238	280	115	241	114	305
12	165	33	619	333	293	393	419	268	103	260	108	305
13	167	152	323	320	280	384	390	273	87	273	115	303
14	167	191	290	335	280	375	345	280	68	275	109	305
15	167	187	278	333	288	370	333	233	69	258	106	305
16	185	205	268	333	280	368	323	235	56	245	114	293
17	209	201	265	333	278	363	308	238	73	265	124	290
18	217	118	263	333	280	360	308	240	72	283	138	303
19	201	157	260	338	280	350	318	243	58	283	129	300
20	38	223	255	345	285	358	325	293	46	268	130	300
21	149	225	268	653	283	355	325	298	48	270	127	298
22	238	221	654	1,190	398	420	310	280	37	270	114	303
23	265	221	456	998	532	384	313	248	34	270	109	303
24	234	225	709	532	614	370	323	197	34	270	102	320
25	209	235	560	609	597	378	318	177	29	270	109	333
26	197	250	522	486	700	360	313	185	33	268	99	343
27	191	258	501	525	501	358	303	135	40	258	109	338
28	185	325	395	501	646	355	308	135	38	245	112	313
29	36	300	384	480	579	353	300	103	45	253	109	295
30	17	243	370	435	------	350	298	90	39	263	109	320
31	151	------	360	426	------	353	------	106	------	268	103	------
TOTAL	5,469	5,911	11,024	13,425	11,660	12,378	9,468	7,254	2,125	5,918	4,578	8,298
MEAN	176	197	356	433	402	399	316	234	70.8	191	148	277
MAX	265	325	709	1,190	700	651	419	303	115	283	285	343
MIN	17	33	221	263	278	320	238	90	29	27	99	115
AC-FT	10,850	11,720	21,870	26,630	23,130	24,550	18,780	14,390	4,210	11,740	9,080	16,460

CAL YR 1971 TOTAL 112,214 MEAN 307 MAX 6,050 MIN 17 AC-FT 222,600
WTR YR 1972 TOTAL 97,508 MEAN 266 MAX 1,190 MIN 17 AC-FT 193,400

PEAK DISCHARGE (BASE, 3,300 CFS).--No peak above base.

11461800 LAKE MENDOCINO NEAR UKIAH, CALIF.

LOCATION.--Lat 39°11'53", long 123°10'50", in Yokayo Rancho Grant, Mendocino County, in intake tower 30 ft upstream from Coyote Dam on East Fork Russian River, and 3.6 miles northeast of Ukiah.

DRAINAGE AREA.--105 sq mi.

PERIOD OF RECORD.--October 1965 to current year. Records prior to October 1965 in files of Corps of Engineers.

GAGE.--Water-stage recorder. Datum of gage is at mean sea level (levels by Corps of Engineers).

EXTREMES.--Current year: Maximum contents, 91,000 acre-ft Apr. 25, 26, May 23, 24 (elevation, 748.06 ft); minimum, 46,400 acre-ft Oct. 31 (elevation, 720.99 ft).
Period of record: Maximum contents, 114,800 acre-ft Jan. 24, 1970 (elevation, 760.86 ft); minimum, 42,500 acre-ft Sept. 10, 11, 1970 (elevation, 718.26 ft).

REMARKS.--Reservoir is formed by earthfill dam; storage began in November 1958. Capacity, 122,900 acre-ft between elevations 637.0 (invert of outlet tunnel) and 764.8 ft (spillway crest) above mean sea level. Storage affected by diversions from Eel River through Potter Valley powerhouse (see sta 11471000). Water is released down East Fork Russian River for irrigation and recreation use. Records given herein represent total contents.

CAPACITY TABLE (ELEVATION, IN FEET, AND CONTENTS, IN ACRE-FEET)

637	135	660	2,110	685	10,900	720	45,000
640	250	665	3,190	690	13,700	730	60,100
645	535	670	4,590	695	17,100	740	76,900
650	900	675	6,280	700	21,100	750	94,600
655	1,380	680	8,430	710	31,620	765	122,900

CONTENTS, IN ACRE-FEET, AT 2400, WATER YEAR OCTOBER 1971 TO SEPTEMBER 1972

DAY	OCT	NOV	DEC	JAN	FEB	MAR	APR	MAY	JUN	JUL	AUG	SEP
1	49,800	46,500	49,900	68,200	72,900	73,200	83,700	89,000	89,200	78,500	71,600	61,400
2	49,700	46,600	50,300	68,800	72,800	73,400	84,300	88,700	89,000	77,900	71,500	61,100
3	49,600	46,700	50,800	69,400	72,700	73,700	84,800	88,200	88,800	77,400	71,400	60,700
4	49,500	46,800	51,100	70,000	72,800	73,600	85,200	87,800	88,600	76,900	71,300	60,400
5	49,400	46,900	51,400	70,600	73,200	73,300	85,800	87,700	88,400	76,300	71,300	60,100
6	49,200	47,000	51,600	71,000	73,200	73,100	86,300	88,200	88,100	75,800	71,300	60,100
7	49,200	47,100	51,800	71,400	73,000	72,500	86,900	88,800	87,900	75,200	71,100	60,000
8	49,100	47,200	52,000	71,800	72,900	72,200	87,400	89,100	87,600	74,600	70,700	60,000
9	49,000	47,200	52,400	72,300	72,600	72,100	87,800	89,600	87,300	74,100	70,300	60,000
10	48,700	47,000	52,800	72,400	72,500	72,300	88,300	90,000	87,000	73,600	69,800	60,000
11	48,600	46,900	53,200	72,400	72,400	72,400	88,800	90,300	86,700	73,500	69,400	59,900
12	48,400	46,700	54,400	72,400	72,300	72,600	89,600	90,500	86,500	73,500	68,900	60,000
13	48,300	46,700	54,700	72,400	72,200	72,900	90,300	90,400	86,200	73,400	68,500	60,000
14	48,100	46,800	55,100	72,300	72,100	73,400	90,500	90,400	85,900	73,300	68,100	60,000
15	48,000	46,900	55,400	72,300	72,000	74,000	90,400	90,200	85,600	73,200	67,600	59,900
16	47,900	47,000	55,600	72,300	72,000	74,600	90,200	90,200	85,100	72,900	67,200	59,900
17	47,900	47,100	55,900	72,300	72,000	75,100	90,200	90,100	84,700	72,800	66,900	59,900
18	47,900	47,000	56,100	72,200	72,000	75,600	90,400	90,100	84,400	72,700	66,600	59,900
19	47,900	47,000	56,400	72,300	72,100	76,100	90,600	90,300	83,900	72,700	66,300	59,800
20	47,500	47,100	56,700	72,400	72,100	76,500	90,800	90,600	83,500	72,600	65,900	59,800
21	47,400	47,200	57,000	73,300	72,200	77,100	90,800	90,800	83,000	72,600	65,600	59,800
22	47,400	47,400	58,400	75,800	72,600	77,800	90,800	91,000	82,500	72,600	65,300	59,800
23	47,500	47,600	59,300	76,600	73,300	78,300	90,900	91,000	82,000	72,600	64,900	59,800
24	47,600	47,800	60,900	74,300	73,600	79,000	90,900	90,900	81,600	72,600	64,500	59,800
25	47,600	48,000	62,100	72,700	73,600	79,600	91,000	90,800	81,200	72,500	64,100	59,900
26	47,500	48,300	63,400	72,400	73,900	80,100	90,900	90,700	80,700	72,400	63,700	60,100
27	47,400	48,700	64,600	72,800	73,500	80,700	90,600	90,400	80,300	72,300	63,300	60,200
28	47,400	49,100	65,300	72,900	73,700	81,300	90,200	90,200	79,900	72,100	63,000	60,200
29	47,000	49,500	66,100	73,000	73,600	81,900	89,800	89,900	79,500	72,000	62,600	60,200
30	46,600	49,700	66,800	73,000	------	82,500	89,300	89,600	79,000	71,900	62,200	60,300
31	46,400	------	67,500	73,000	------	83,100	------	89,400	------	71,700	61,800	------
MAX	49,800	49,700	67,500	76,600	73,900	83,100	91,000	91,000	89,200	78,500	71,600	61,400
MIN	46,400	46,500	49,900	68,200	72,000	72,100	83,700	87,700	79,000	71,700	61,800	59,800
(a)	721.00	723.26	734.59	737.91	738.22	743.72	747.16	747.21	741.30	737.15	731.10	730.12
(b)	-3,500	+3,300	+17,800	+5,500	+600	+9,500	+6,200	+100	-10,400	-7,300	-9,900	-1,500

CAL YR 1971 b +200
WTR YR 1972 b +10,400

a Elevation, in feet, at end of month.
b Change in contents, in acre-feet.

11462000 EAST FORK RUSSIAN RIVER NEAR UKIAH, CALIF.

LOCATION.--Lat 39°11'45", long 123°11'30", in Yokayo Rancho Grant, Mendocino County, on right bank of outlet channel, 500 ft downstream from Coyote Dam, 1,300 ft upstream from mouth, and 3.2 miles northeast of Ukiah.

DRAINAGE AREA.--105 sq mi.

PERIOD OF RECORD.--August 1911 to September 1913, October 1951 to June 1956, October 1957 to current year.

GAGE.--Water-stage recorder and concrete control. Datum of gage is 614.41 ft above mean sea level. Prior to October 1951, nonrecording gage at site 0.5 mile upstream at different datum. October 1951 to June 1956, water-stage recorder at site 1.0 mile upstream at different datum.

AVERAGE DISCHARGE (unadjusted).--7 years (1911-13, 1951-55, 1957-58), 356 cfs (257,900 acre-ft per year); 13 years (1959-72), 347 cfs (251,400 acre-ft per year).

EXTREMES.--Current year: Maximum discharge, 1,910 cfs Jan. 24 (gage height, 4.38 ft); minimum daily, 29 cfs Dec. 24-26.

Period of record (prior to regulation by Lake Mendocino): Maximum discharge, 13,300 cfs Dec. 21, 1955 (gage height, 16.86 ft, site and datum then in use), from rating curve extended above 1,700 cfs on basis of maximum flow at station upstream which was defined to 8,600 cfs; no flow Aug. 13-15, 1913.

1957 to current year: Maximum discharge, 7,350 cfs Jan. 24, 1970 (gage height, 10.84 ft); minimum daily, 0.10 cfs May 19-21, 1969, Dec. 24-27, 1970, Jan. 3-7, 1971.

REMARKS.--Records good. Flow affected by diversion from Eel River through Potter Valley powerhouse (see sta 11471000) and since November 1958 by storage in Lake Mendocino 500 ft upstream (see sta 11461800). Small diversions above station for irrigation of about 1,000 acres.

DISCHARGE, IN CUBIC FEET PER SECOND, WATER YEAR OCTOBER 1971 TO SEPTEMBER 1972

DAY	OCT	NOV	DEC	JAN	FEB	MAR	APR	MAY	JUN	JUL	AUG	SEP
1	243	180	129	30	418	681	58	464	173	290	302	296
2	243	156	129	30	418	682	58	430	174	290	286	294
3	240	156	129	30	418	682	60	435	174	290	286	294
4	237	156	131	30	418	682	60	415	174	290	286	292
5	237	156	132	65	418	683	59	273	171	290	286	290
6	237	156	132	93	418	616	60	33	192	272	286	294
7	237	156	132	93	418	762	60	33	205	260	286	287
8	237	156	132	93	418	492	60	51	205	258	302	282
9	240	156	132	93	418	342	60	52	222	258	313	282
10	237	156	132	240	364	342	60	64	233	258	317	282
11	237	156	132	330	334	342	60	133	233	258	317	282
12	222	153	132	330	334	342	60	212	212	270	317	250
13	213	153	132	330	334	207	60	286	201	277	317	282
14	213	153	132	330	317	133	231	286	201	299	304	282
15	213	153	132	330	310	133	380	271	201	313	295	282
16	213	153	132	330	295	135	380	262	221	313	293	282
17	213	153	132	330	286	135	264	243	233	295	294	282
18	213	156	132	330	269	138	191	193	233	282	295	278
19	210	156	132	333	260	138	191	171	249	265	295	266
20	210	156	132	334	261	138	246	171	258	254	299	282
21	210	156	132	334	261	117	282	171	258	254	299	282
22	210	156	135	288	261	98	281	210	258	254	299	278
23	210	138	65	675	261	98	278	235	243	254	299	278
24	210	129	29	1,560	518	73	278	236	233	271	303	278
25	210	129	29	1,420	678	56	278	236	233	282	304	278
26	210	129	29	677	681	58	335	236	233	282	302	274
27	210	129	30	406	681	58	405	236	233	300	303	274
28	210	129	30	418	680	58	465	236	249	313	299	274
29	210	129	30	418	682	58	524	236	258	313	299	274
30	207	129	30	418	------	58	524	195	278	313	302	274
31	207	------	30	418	------	58	------	171	------	313	299	------
TOTAL	6,849	4,479	3,199	11,136	11,829	8,595	6,308	6,876	6,641	8,731	9,284	8,425
MEAN	221	149	103	359	408	277	210	222	221	282	299	281
MAX	243	180	135	1,560	682	762	524	464	278	313	317	296
MIN	207	129	29	30	260	56	58	33	171	254	286	250
AC-FT	13,580	8,880	6,350	22,090	23,460	17,050	12,510	13,640	13,170	17,320	18,410	16,710

CAL YR 1971 TOTAL 14,940.13 MEAN 40.9 MAX 3,910 MIN .10 AC-FT 29,630
WTR YR 1972 TOTAL 92,352.00 MEAN 252 MAX 1,560 MIN 29 AC-FT 183,200

11462500 RUSSIAN RIVER NEAR HOPLAND, CALIF.

LOCATION.--Lat 39°01'36", long 123°07'46", in Rancho de Sanel Grant, Mendocino County, on right bank at abandoned highway bridge, 0.2 mile downstream from McNab Creek, 4 miles north of Hopland.

DRAINAGE AREA.--362 sq mi.

PERIOD OF RECORD.--October 1939 to current year. Monthly discharge only for some periods, published in WSP 1315-B.

GAGE.--Water-stage recorder. Datum of gage is 497.61 ft above mean sea level. Prior to Sept. 9, 1943, nonrecording gage at same site and datum.

AVERAGE DISCHARGE.--33 years, 721 cfs (522,400 acre-ft per year).

EXTREMES.--Current year: Maximum discharge, 6,760 cfs Jan. 23 (gage height, 12.17 ft); minimum daily, 87 cfs May 10.
Period of record: Maximum discharge, 45,000 cfs Dec. 22, 1955 (gage height, 27.00 ft); minimum daily, 26 cfs Dec. 18, 1943, June 26, 1949.
Flood in December 1937 reached a stage of 30.0 ft, from floodmarks.

REMARKS.--Records good. Small diversions for irrigation of about 700 acres above station. Flow also affected by diversion into basin (see REMARKS for East Fork Russian River stations) and since November 1958 by storage in Lake Mendocino 15 miles upstream (see sta 11461800). Records of water temperatures for the current year are published in Part 2 of this report.

REVISIONS.--WSP 1041: Drainage area.

DISCHARGE, IN CUBIC FEET PER SECOND, WATER YEAR OCTOBER 1971 TO SEPTEMBER 1972

DAY	OCT	NOV	DEC	JAN	FEB	MAR	APR	MAY	JUN	JUL	AUG	SEP
1	236	188	195	253	814	1,580	239	536	181	250	279	238
2	232	165	225	236	749	2,020	231	500	172	256	263	241
3	232	163	362	216	715	2,390	223	490	177	262	257	249
4	232	163	361	185	897	1,830	215	480	177	263	252	249
5	232	163	253	170	1,110	1,500	247	430	177	262	247	247
6	229	163	348	185	981	1,230	275	181	178	249	239	243
7	229	165	285	188	864	1,210	247	133	194	230	242	239
8	229	165	232	183	799	974	223	108	196	227	251	238
9	229	165	253	178	747	715	207	122	204	227	266	235
10	229	168	331	219	671	702	200	87	221	228	263	237
11	229	173	347	343	591	659	227	159	224	223	264	239
12	222	170	952	351	564	624	647	192	219	227	268	211
13	213	183	516	351	542	547	695	291	197	239	271	227
14	210	180	347	351	515	407	525	299	191	251	264	231
15	210	175	299	351	485	381	641	291	190	267	247	235
16	210	175	260	351	465	359	597	275	194	273	248	239
17	210	173	236	351	440	350	510	263	215	266	249	242
18	207	173	219	351	425	333	385	235	223	245	248	247
19	210	173	207	355	403	316	363	200	232	239	247	232
20	207	175	201	369	407	312	372	200	247	219	247	243
21	207	173	201	1,180	407	295	407	207	246	217	250	247
22	207	173	1,100	1,920	708	381	407	219	234	212	247	248
23	207	173	678	4,230	1,280	425	403	243	228	217	252	251
24	201	163	971	2,620	1,510	333	421	247	211	227	253	255
25	201	160	796	2,710	1,710	399	407	243	211	245	251	263
26	198	165	819	1,630	2,170	329	412	239	208	249	249	282
27	198	178	1,130	1,220	1,690	299	485	239	200	251	249	273
28	198	222	513	1,100	1,670	283	505	239	207	267	248	268
29	198	229	382	1,020	2,260	263	553	239	227	274	248	271
30	195	213	315	939	------	255	558	223	231	279	245	271
31	195	------	274	873	------	247	------	185	------	280	240	------
TOTAL	6,642	5,267	13,608	24,979	26,589	21,948	11,827	7,995	6,212	7,621	7,844	7,391
MEAN	214	176	439	806	917	708	394	258	207	246	253	246
MAX	236	229	1,130	4,230	2,260	2,390	695	536	247	280	279	282
MIN	195	160	195	170	403	247	200	87	172	212	239	211
AC-FT	13,170	10,450	26,990	49,550	52,740	43,530	23,460	15,860	12,320	15,120	15,560	14,660

CAL YR 1971 TOTAL 222,617 MEAN 610 MAX 16,300 MIN 160 AC-FT 441,600
WTR YR 1972 TOTAL 147,923 MEAN 404 MAX 4,230 MIN 87 AC-FT 293,400

11463000 RUSSIAN RIVER NEAR CLOVERDALE, CALIF.

LOCATION.--Lat 38°52'16", long 123°03'09", in NW¼NW¼ sec.23, T.12 N., R.11 W., Mendocino County, on left bank 0.3 mile downstream from Cummisky Creek, and 5.5 miles northwest of Cloverdale.

DRAINAGE AREA.--503 sq mi.

PERIOD OF RECORD.--July 1951 to current year.

GAGE.--Water-stage recorder. Altitude of gage is 350 ft (from topographic map). Prior to July 30, 1970, at site 0.2 mile upstream at different datum.

AVERAGE DISCHARGE.--21 years, 983 cfs (712,200 acre-ft per year).

EXTREMES.--Current year: Maximum discharge, 6,140 cfs Jan. 23 (gage height, 10.29 ft); minimum daily, 139 cfs May 10.
Period of record: Maximum discharge, 55,200 cfs Dec. 22, 1964 (gage height, 31.60 ft, site and datum then in use); minimum daily, 80 cfs May 25, 1970.

REMARKS.--Records good. Small diversions for irrigation of about 1,200 acres above station. Flow also affected by diversion into basin (see REMARKS for East Fork Russian River stations) and since November 1958 by storage in Lake Mendocino 28 miles upstream (see sta 11461800).

DISCHARGE, IN CUBIC FEET PER SECOND, WATER YEAR OCTOBER 1971 TO SEPTEMBER 1972

DAY	OCT	NOV	DEC	JAN	FEB	MAR	APR	MAY	JUN	JUL	AUG	SEP
1	225	208	199	485	1,040	2,020	269	640	190	240	267	245
2	225	175	223	453	945	2,290	257	582	181	249	256	246
3	225	165	371	398	885	2,770	250	562	182	256	248	251
4	225	158	445	329	1,210	2,300	239	547	179	256	247	256
5	225	156	301	287	1,730	1,890	344	518	175	259	246	253
6	222	156	345	265	1,430	1,540	431	294	165	252	247	249
7	220	156	349	266	1,200	1,470	336	181	186	229	245	247
8	220	156	265	249	1,070	1,280	290	158	192	223	246	243
9	220	156	241	235	981	960	261	154	196	221	264	238
10	220	156	344	251	895	981	253	139	220	226	266	242
11	220	173	398	404	770	890	312	153	225	223	270	248
12	218	175	997	421	712	825	895	196	227	219	274	236
13	212	199	805	438	671	755	1,180	280	197	236	278	221
14	208	189	474	445	635	550	750	324	185	237	281	238
15	205	174	404	438	586	494	865	334	182	257	262	237
16	203	168	345	428	558	456	800	315	177	265	262	239
17	203	166	307	417	522	432	712	311	198	270	264	246
18	203	163	286	414	505	401	526	282	208	244	261	253
19	205	162	267	413	473	381	475	245	214	236	263	244
20	210	162	257	426	478	367	453	233	228	217	262	236
21	210	162	256	830	481	354	501	246	229	213	262	246
22	210	162	2,130	1,750	910	452	496	248	228	211	262	249
23	215	162	1,310	4,310	2,060	622	490	260	232	210	264	250
24	212	148	1,920	2,800	2,010	442	522	280	216	214	263	259
25	210	141	1,670	3,170	2,060	481	499	275	213	233	261	266
26	210	143	1,680	2,170	2,480	415	481	268	213	236	260	292
27	209	163	2,180	1,630	2,090	369	558	265	202	235	258	291
28	208	211	1,050	1,480	1,910	339	570	263	201	252	259	286
29	208	253	745	1,330	2,740	315	644	263	220	258	256	282
30	208	229	604	1,210	------	299	649	250	226	268	253	280
31	208	------	520	1,120	------	282	------	203	------	271	250	------
TOTAL	6,622	5,147	21,688	29,262	34,037	27,422	15,308	9,269	6,087	7,416	8,057	7,569
MEAN	214	172	700	944	1,174	885	510	299	203	239	260	252
MAX	225	253	2,180	4,310	2,740	2,770	1,180	640	232	271	281	292
MIN	203	141	199	235	473	282	239	139	165	210	245	221
AC-FT	13,130	10,210	43,020	58,040	67,510	54,390	30,360	18,390	12,070	14,710	15,980	15,010

CAL YR 1971 TOTAL 270,815 MEAN 742 MAX 19,100 MIN 141 AC-FT 537,200
WTR YR 1972 TOTAL 177,884 MEAN 486 MAX 4,310 MIN 139 AC-FT 352,800

11463200 BIG SULPHUR CREEK NEAR CLOVERDALE, CALIF.

LOCATION.--Lat 38°49'21", long 122°59'07", in SW¼SW¼ sec.4, T.11 N., R.10 W., Sonoma County, on right bank 0.5 mile downstream from small left-bank tributary, 1.9 miles upstream from mouth, and 2.0 miles northeast of Cloverdale.

DRAINAGE AREA.--82.3 sq mi.

PERIOD OF RECORD.--July 1957 to September 1972 (discontinued).

GAGE.--Water-stage recorder. Datum of gage is 392.78 ft above mean sea level.

AVERAGE DISCHARGE.--15 years, 192 cfs (139,100 acre-ft per year); median of yearly mean discharges, 160 cfs (116,000 acre-ft per year).

EXTREMES.--Current year: Maximum discharge, 822 cfs Jan. 23 (gage height, 5.07 ft); minimum daily, 1.8 cfs Sept. 1.

Period of record: Maximum discharge, 15,700 cfs Dec. 22, 1964 (gage height, 15.08 ft), from rating curve extended above 5,700 cfs on basis of slope-area measurement at gage height 16.8 ft; minimum daily, 1.8 cfs Sept. 24, Oct. 20, 1964, Sept. 1, 1972.

Flood of Dec. 22, 1955, reached a stage of 16.8 ft from floodmarks, present datum (discharge, 20,000 cfs by slope-area measurement of maximum flow).

REMARKS.--Records good. No regulation or diversion above station. Records of water temperatures for the current year are published in Part 2 of this report.

REVISIONS (WATER YEARS).--WSP 1929: 1958-60.

DISCHARGE, IN CUBIC FEET PER SECOND, WATER YEAR OCTOBER 1971 TO SEPTEMBER 1972

DAY	OCT	NOV	DEC	JAN	FEB	MAR	APR	MAY	JUN	JUL	AUG	SEP
1	4.0	6.2	14	120	121	187	49	49	17	6.6	3.7	1.8
2	4.0	6.2	35	105	108	180	48	47	16	6.7	3.6	1.9
3	4.0	5.8	45	85	101	187	45	44	16	7.1	3.6	2.2
4	4.0	5.8	42	75	195	157	44	43	15	7.0	3.5	2.6
5	4.0	5.8	28	65	376	138	135	43	15	7.0	3.7	2.6
6	4.0	5.8	25	60	320	127	204	42	14	7.1	3.5	2.6
7	4.0	5.4	22	55	240	123	118	41	13	6.3	3.2	2.8
8	4.0	5.8	18	50	190	121	97	39	14	5.8	2.9	2.7
9	4.0	5.8	18	47	160	118	86	38	15	5.6	2.8	2.8
10	4.0	6.6	21	44	134	158	79	35	16	5.3	2.6	2.5
11	4.0	19	21	42	123	127	203	34	15	5.3	2.7	2.7
12	4.0	24	120	41	114	114	390	32	14	5.0	2.5	2.9
13	4.0	40	70	40	106	104	301	30	13	4.5	2.5	3.1
14	4.0	33	50	38	101	96	217	28	12	4.2	2.5	3.2
15	3.9	16	33	36	96	88	176	27	11	3.8	2.7	3.1
16	4.2	11	26	34	89	81	148	27	11	3.8	3.4	3.2
17	4.6	9.4	22	33	86	77	129	28	11	4.3	4.4	3.4
18	5.0	8.6	19	32	85	72	115	26	9.8	4.7	4.9	3.9
19	5.4	7.8	17	33	82	67	103	26	9.9	4.9	4.7	4.0
20	6.2	7.8	15	33	84	64	94	31	9.9	5.0	4.5	3.9
21	6.6	7.8	19	75	77	62	86	30	9.3	5.5	4.3	3.4
22	6.2	7.8	260	180	125	116	81	28	9.7	5.8	3.8	3.0
23	7.0	7.8	120	434	225	98	77	26	11	5.4	3.2	2.6
24	7.0	7.8	250	192	246	77	87	24	10	5.0	2.8	2.3
25	6.2	7.8	260	279	215	74	74	23	9.6	5.2	2.4	2.4
26	5.8	9.0	210	211	200	66	67	22	9.0	4.6	2.2	8.3
27	5.4	11	360	211	167	62	62	21	8.6	4.4	2.0	12
28	5.4	23	200	170	185	59	58	20	8.1	4.0	2.1	6.6
29	5.4	28	160	150	261	56	55	19	7.8	3.9	2.5	4.0
30	5.8	19	120	138	------	53	52	18	7.3	4.2	2.2	3.6
31	5.8	------	105	134	------	51	------	17	------	4.0	2.0	------
TOTAL	151.9	364.8	2,725	3,242	4,612	3,160	3,480	958	358.0	162.0	97.4	106.1
MEAN	4.90	12.2	87.9	105	159	102	116	30.9	11.9	5.23	3.14	3.54
MAX	7.0	40	360	434	376	187	390	49	17	7.1	4.9	12
MIN	3.9	5.4	14	32	77	51	44	17	7.3	3.8	2.0	1.8
AC-FT	301	724	5,410	6,430	9,150	6,270	6,900	1,900	710	321	193	210

CAL YR 1971 TOTAL 35,690.2 MEAN 97.8 MAX 2,490 MIN 3.4 AC-FT 70,790
WTR YR 1972 TOTAL 19,417.2 MEAN 53.1 MAX 434 MIN 1.8 AC-FT 38,510

PEAK DISCHARGE (BASE, 7,500 CFS).--No peak above base.

11463900 MAACAMA CREEK NEAR KELLOGG, CALIF.

LOCATION.--Lat 38°38'25", long 122°45'45", in SW¼ sec.9, T.9 N., R.8 W., Sonoma County, on right bank 0.5 mile downstream from Redwood Creek, and 4.4 miles west of Kellogg.

DRAINAGE AREA.--43.4 sq mi.

PERIOD OF RECORD.--Occasional low-flow measurements and annual maximum, water years 1958-60, December 1960 to current year.

GAGE.--Water-stage recorder. Datum of gage is 188.91 ft above mean sea level. Prior to Dec. 20, 1960, crest-stage gage only at site 700 ft upstream at different datum.

AVERAGE DISCHARGE.--11 years (1961-72), 86.4 cfs (62,600 acre-ft per year).

EXTREMES.--Current year: Maximum discharge, 642 cfs Jan. 22 (gage height, 6.43 ft); minimum daily, 0.04 cfs Sept. 15, 24.
Period of record: Maximum discharge, 8,920 cfs Dec. 22, 1964 (gage height, 17.56 ft); no flow for many days in 1964 and 1968.

REMARKS.--Records good. No regulation or diversion above station.

DISCHARGE, IN CUBIC FEET PER SECOND, WATER YEAR OCTOBER 1971 TO SEPTEMBER 1972

DAY	OCT	NOV	DEC	JAN	FEB	MAR	APR	MAY	JUN	JUL	AUG	SEP
1	1.5	1.2	2.9	46	59	87	20	16	6.4	1.8	.89	.15
2	1.5	1.2	4.8	38	49	98	20	16	6.0	1.6	.79	.14
3	1.2	1.1	7.1	28	50	145	19	16	5.9	1.7	.79	.21
4	1.1	1.1	7.5	23	165	108	19	16	6.0	1.7	.69	.30
5	.74	1.1	5.0	22	295	88	38	17	5.6	1.7	.57	.22
6	.89	1.1	4.3	21	217	76	62	16	5.0	2.1	.53	.19
7	.84	1.0	4.0	19	139	67	35	16	5.0	2.0	.45	.12
8	.79	1.1	3.3	16	104	61	28	15	5.2	2.5	.53	.08
9	.74	1.2	3.7	14	84	59	25	14	5.4	1.1	.57	.10
10	.74	1.2	5.4	15	71	88	23	13	5.8	1.4	.53	.12
11	.84	4.0	5.4	14	60	64	85	13	5.0	1.2	.57	.26
12	.79	5.4	59	15	53	56	173	12	4.3	.79	.49	.39
13	.69	13	21	14	48	51	110	11	3.8	1.1	.41	.22
14	.69	4.7	11	13	44	46	70	11	3.4	1.1	.35	.08
15	.57	2.2	8.6	12	39	40	56	10	3.3	.94	.20	.04
16	.74	1.5	6.8	11	36	34	50	10	2.8	.84	.26	.11
17	.84	2.5	6.0	10	33	32	42	10	2.8	.79	.28	.19
18	.79	2.4	5.4	9.7	31	30	37	9.6	2.9	.89	.41	.25
19	1.0	2.4	4.7	9.7	29	28	34	9.6	3.0	1.0	.54	.25
20	1.4	2.0	4.3	11	33	28	32	10	3.2	1.6	.60	.24
21	1.3	1.6	5.0	104	31	28	29	11	2.7	1.2	.59	.20
22	1.1	1.5	177	234	63	54	27	10	1.8	1.6	.58	.14
23	1.5	1.5	75	290	99	38	26	8.7	2.7	1.2	.57	.07
24	1.3	1.5	157	107	98	32	30	8.1	3.2	1.6	.48	.04
25	1.2	1.6	162	181	96	33	26	8.1	3.0	1.8	.38	.07
26	1.1	1.9	126	108	90	28	23	7.7	2.8	1.6	.30	2.3
27	1.1	2.8	238	171	75	25	22	7.8	2.6	1.5	.27	4.1
28	1.0	6.6	84	128	92	25	21	7.4	2.5	1.3	.43	2.7
29	1.1	5.6	59	95	128	24	19	7.0	2.3	.84	.40	1.8
30	1.1	3.7	44	77	------	23	17	6.7	2.0	.74	.35	1.4
31	1.2	------	38	68	------	21	------	6.6	------	.84	.23	------
TOTAL	31.39	79.7	1,345.2	1,924.4	2,411	1,617	1,218	350.3	116.4	42.07	15.03	16.48
MEAN	1.01	2.66	43.4	62.1	83.1	52.2	40.6	11.3	3.88	1.36	.48	.55
MAX	1.5	13	238	290	295	145	173	17	6.4	2.5	.89	4.1
MIN	.57	1.0	2.9	9.7	29	21	17	6.6	1.8	.74	.20	.04
AC-FT	62	158	2,670	3,820	4,780	3,210	2,420	695	231	83	30	33

CAL YR 1971 TOTAL 15,024.54 MEAN 41.2 MAX 951 MIN .14 AC-FT 29,800
WTR YR 1972 TOTAL 9,166.97 MEAN 25.0 MAX 295 MIN .04 AC-FT 18,180

PEAK DISCHARGE (BASE, 2,000 CFS).--No peak above base.

11464000 RUSSIAN RIVER NEAR HEALDSBURG, CALIF.

LOCATION.--Lat 38°36'48", long 122°50'07", in Sotoyome Grant, Sonoma County, on left bank 2 miles east of Healdsburg, and 3.5 miles upstream from Dry Creek.

DRAINAGE AREA.--793 sq mi.

PERIOD OF RECORD.--October 1939 to current year. Monthly discharge only for some periods, published in WSP 1315-B.

GAGE.--Water-stage recorder. Datum of gage is 77.01 ft above mean sea level.

AVERAGE DISCHARGE.--33 years, 1,417 cfs (1,027,000 acre-ft per year).

EXTREMES.--Current year: Maximum discharge, 6,590 cfs Jan. 23 (gage height, 6.77 ft); minimum daily, 161 cfs June 17.
Period of record: Maximum discharge, 71,300 cfs Dec. 23, 1964 (gage height, 27.00 ft); maximum gage height, 30.0 ft Feb. 28, 1940; minimum daily discharge, 38 cfs July 2, 1950.
Flood in December 1937 reached a stage of 30.8 ft, from floodmarks.

REMARKS.--Records good. Several small diversions for irrigation above station. Flow also affected by diversion into basin (see REMARKS for East Fork Russian River stations) and since November 1958 by storage in Lake Mendocino 63 miles upstream (see sta 11461800). Records of water temperatures for the current year are published in Part 2 of this report.

REVISIONS (WATER YEARS).--WSP 981: 1942.

DISCHARGE, IN CUBIC FEET PER SECOND, WATER YEAR OCTOBER 1971 TO SEPTEMBER 1972

DAY	OCT	NOV	DEC	JAN	FEB	MAR	APR	MAY	JUN	JUL	AUG	SEP
1	219	219	254	764	1,340	2,500	418	708	250	191	232	222
2	215	215	262	748	1,220	2,380	400	676	212	207	222	226
3	215	191	325	670	1,140	3,050	382	664	202	232	212	232
4	219	177	478	580	1,510	2,850	370	646	199	250	202	236
5	215	171	460	490	2,660	2,300	406	622	199	258	199	232
6	215	168	358	430	2,460	1,990	732	568	210	262	199	222
7	215	168	418	418	1,960	1,750	634	382	225	250	193	210
8	215	168	370	388	1,650	1,670	532	310	220	212	186	212
9	212	168	310	358	1,440	1,370	484	270	210	199	186	215
10	215	171	320	335	1,290	1,380	442	254	220	191	207	218
11	219	198	394	370	1,140	1,240	532	226	240	191	218	218
12	219	219	592	496	1,040	1,160	1,040	215	230	180	229	216
13	212	240	1,250	508	964	1,080	1,860	222	220	173	246	261
14	201	286	716	520	892	924	1,240	320	210	180	250	214
15	201	243	544	514	836	804	1,050	350	183	183	250	214
16	201	215	466	502	772	716	1,030	350	176	210	232	214
17	201	201	394	502	718	670	924	350	161	240	246	220
18	205	194	346	496	682	634	764	335	180	246	243	231
19	205	191	315	496	646	598	628	310	200	215	236	231
20	212	187	290	508	628	562	574	285	215	202	243	224
21	215	187	282	568	634	544	574	283	236	186	243	220
22	212	187	2,080	1,660	716	580	586	283	243	173	232	224
23	222	187	1,980	4,340	1,820	804	574	310	250	170	232	227
24	222	184	1,730	3,330	2,280	682	616	320	254	170	236	231
25	219	174	2,910	3,480	2,460	622	610	325	229	168	232	241
26	219	168	2,140	3,050	2,520	616	580	325	215	180	236	263
27	219	174	3,510	2,380	2,500	556	592	320	204	188	236	275
28	215	205	1,850	2,140	2,090	514	646	315	180	186	236	275
29	215	250	1,260	1,810	3,120	484	664	310	176	204	240	271
30	215	274	996	1,630	------	454	694	300	188	218	240	267
31	219	------	836	1,480	------	442	------	295	------	232	229	------
TOTAL	6,623	5,980	28,436	35,961	43,128	35,926	20,578	11,449	6,337	6,347	7,023	6,962
MEAN	214	199	917	1,160	1,487	1,159	686	369	211	205	227	232
MAX	222	286	3,510	4,340	3,120	3,050	1,860	708	254	262	250	275
MIN	201	168	254	335	628	442	370	215	161	168	186	210
AC-FT	13,140	11,860	56,400	71,330	85,540	71,260	40,820	22,710	12,570	12,590	13,930	13,810

CAL YR 1971 TOTAL 364,358 MEAN 998 MAX 21,600 MIN 154 AC-FT 722,700
WTR YR 1972 TOTAL 214,750 MEAN 587 MAX 4,340 MIN 161 AC-FT 426,000

11464500 DRY CREEK NEAR CLOVERDALE, CALIF.

LOCATION.--Lat 38°44'59", long 123°05'28", in NE¼NE¼ sec.5, T.10 N., R.11 W., Sonoma County, on left bank 500 ft downstream from Smith Creek, and 5 miles southwest of Cloverdale.

DRAINAGE AREA.--87.8 sq mi.

PERIOD OF RECORD.--October 1941 to current year. Monthly discharge only for some periods, published in WSP 1315-B.

GAGE.--Water-stage recorder. Datum of gage is 304.04 ft above mean sea level.

AVERAGE DISCHARGE.--31 years, 158 cfs (114,500 acre-ft per year); median of yearly mean discharges, 150 cfs (109,000 acre-ft per year).

EXTREMES.--Current year: Maximum discharge, 1,630 cfs Dec. 27 (gage height, 5.43 ft); minimum daily, 0.24 cfs Sept. 23.
Period of record: Maximum discharge, 18,100 cfs Dec. 22, 1964 (gage height, 18.09 ft); minimum, 0.10 cfs several days in 1944, 1949, 1951-53, 1962, 1964.
Flood in December 1937 reached a stage of about 18 ft, from floodmarks.

REMARKS.--Records good. No regulation or diversion above station. Records of water temperatures for the current year are published in Part 2 of this report.

REVISIONS (WATER YEARS).--1395: 1942(M), 1943, 1946(M), 1951-54(M), drainage area.

DISCHARGE, IN CUBIC FEET PER SECOND, WATER YEAR OCTOBER 1971 TO SEPTEMBER 1972

DAY	OCT	NOV	DEC	JAN	FEB	MAR	APR	MAY	JUN	JUL	AUG	SEP
1	1.0	1.7	12	84	123	181	35	29	9.6	2.4	.60	.34
2	1.0	1.7	35	73	105	184	34	27	9.2	2.1	.58	.35
3	.87	1.7	45	63	95	184	33	25	9.3	2.2	.57	.36
4	.95	1.7	36	52	170	158	32	23	8.6	2.1	.56	.38
5	.95	1.8	21	46	396	138	100	22	7.9	2.1	.54	.42
6	.87	1.8	17	42	254	123	118	21	7.3	2.0	.53	.35
7	.80	1.8	16	39	198	108	71	21	6.9	1.8	.52	.33
8	.80	1.9	14	36	164	100	57	21	6.6	1.7	.50	.30
9	.87	2.1	14	33	138	102	51	20	6.1	1.6	.50	.30
10	.87	2.4	18	30	120	133	47	19	3.5	1.5	.49	.36
11	.87	9.9	19	29	105	105	77	19	5.6	1.4	.47	.34
12	.95	12	207	28	93	93	229	18	8.4	1.3	.47	.36
13	.95	27	54	27	82	86	152	18	5.8	1.2	.46	.30
14	.95	14	32	25	75	81	113	18	5.1	1.2	.45	.29
15	.80	8.6	24	24	69	75	90	17	4.7	1.0	.45	.28
16	.73	6.6	18	23	65	69	77	17	4.5	.89	.45	.28
17	.73	5.2	16	22	60	66	69	17	4.3	1.1	.44	.29
18	.80	4.6	16	21	57	61	65	16	3.7	1.0	.44	.29
19	.80	4.0	16	23	54	58	58	16	4.1	.94	.46	.30
20	1.0	4.0	15	25	68	57	52	18	4.6	.90	.47	.31
21	1.0	3.8	21	39	58	54	49	18	4.0	.86	.59	.28
22	1.2	3.8	548	81	113	108	45	17	4.1	.82	.54	.25
23	1.3	3.6	250	254	245	75	43	16	4.2	.78	.42	.24
24	1.3	3.6	432	128	237	58	54	15	4.0	.76	.38	.25
25	1.4	3.6	330	277	188	54	41	14	3.5	.74	.36	.31
26	1.4	5.5	654	181	177	49	38	14	3.5	.72	.33	.80
27	1.4	11	886	213	149	46	36	13	3.1	.70	.33	1.8
28	1.5	18	286	202	195	42	34	12	2.8	.68	.33	1.8
29	1.5	23	167	161	263	40	31	11	2.7	.66	.34	1.6
30	1.5	16	125	155	------	39	30	11	2.5	.64	.32	1.5
31	1.5	------	100	138	------	36	------	10	------	.62	.29	------
TOTAL	32.56	206.4	4,444	2,594	4,116	2,763	1,961	553	160.2	38.41	14.18	15.36
MEAN	1.05	6.88	143	83.7	142	89.1	65.4	17.8	5.34	1.24	.46	.51
MAX	1.5	27	886	277	396	184	229	29	9.6	2.4	.60	1.8
MIN	.73	1.7	12	21	54	36	30	10	2.5	.62	.29	.24
AC-FT	65	409	8,810	5,150	8,160	5,480	3,890	1,100	318	76	28	30

CAL YR 1971 TOTAL 38,657.99 MEAN 106 MAX 4,440 MIN .61 AC-FT 76,680
WTR YR 1972 TOTAL 16,898.11 MEAN 46.2 MAX 886 MIN .24 AC-FT 33,520

PEAK DISCHARGE (BASE, 3,300 CFS).--No peak above base.

11465200 DRY CREEK NEAR GEYSERVILLE, CALIF.

LOCATION.--Lat 38°41'55", long 122°57'25", in Tzabaco Grant, Sonoma County, on left bank pier of bridge 0.3 mile downstream from Pena Creek, and 3 miles west of Geyserville.

DRAINAGE AREA.--162 sq mi.

PERIOD OF RECORD.--October 1959 to current year.

GAGE.--Water-stage recorder. Datum of gage is 159.40 ft above mean sea level. Prior to Oct. 1, 1964, at datum 1.00 ft higher.

AVERAGE DISCHARGE.--13 years, 310 cfs (224,600 acre-ft per year); median of yearly mean discharges, 290 cfs (210,000 acre-ft per year).

EXTREMES.--Current year: Maximum discharge, 3,490 cfs Dec. 27 (gage height, 6.45 ft); no flow for many days. Period of record: Maximum discharge, 32,400 cfs Jan. 31, 1963 (gage height, 17.50 ft, present datum); no flow at times.

REMARKS.--Records good. No regulation; small diversion above station for orchard irrigation of about 400 acres in summer. Records of chemical analyses, water temperatures, suspended-sediment discharge, and sediment and turbidity data for the current year are published in Part 2 of this report.

DISCHARGE, IN CUBIC FEET PER SECOND, WATER YEAR OCTOBER 1971 TO SEPTEMBER 1972

DAY	OCT	NOV	DEC	JAN	FEB	MAR	APR	MAY	JUN	JUL	AUG	SEP
1		0	22	170	194	338	58	54	13	2.6		
2		.18	35	142	163	319	57	47	12	2.3		
3		.54	80	119	146	293	56	45	12	2.2		
4		1.0	62	103	234	274	55	43	11	1.7		
5		1.1	44	90	761	239	127	43	9.8	1.3		
6		1.4	40	84	525	209	221	42	8.6	.98		
7		1.9	36	75	383	189	129	40	8.6	.72		
8		2.4	33	68	310	167	106	40	8.4	.54		
9		3.2	30	62	262	152	90	38	8.4	.42		
10		5.0	28	56	225	203	84	33	7.8	.30		
11		10	36	53	194	163	133	29	6.8	.22		
12		22	380	52	165	146	407	28	7.2	.17		
13		25	134	52	150	131	347	28	8.0	.13		
14		20	80	50	140	120	237	28	6.8	.09		
15		40	60	46	129	114	189	26	6.3	0		
16		25	54	45	119	106	159	25	5.4	0		
17		18	48	45	114	98	140	24	5.1	0		
18		10	44	45	109	90	125	24	4.9	0		
19		9.0	42	45	106	85	112	23	4.5	0		
20		8.0	38	45	114	81	99	25	4.4	0		
21		7.0	40	55	109	76	89	27	4.5	0		
22		6.8	950	99	140	125	85	27	4.3	0		
23		6.6	399	444	319	135	83	25	4.4	0		
24		6.6	656	232	386	104	98	23	4.5	0		
25		6.6	652	446	301	93	83	22	4.4	0		
26		6.6	1,140	299	290	83	74	21	4.3	0		
27		16	1,920	332	257	75	67	20	4.2	0		
28		33	615	344	270	71	61	19	3.2	0		
29		42	360	307	480	66	59	17	2.9	0		
30		29	254	249	------	62	56	16	2.8	0		
31		------	207	220	------	59	------	15	------	0		------
TOTAL	0	363.92	8,519	4,474	7,095	4,466	3,686	917	198.5	13.67	0	0
MEAN	0	12.1	275	144	245	144	123	29.6	6.62	.44	0	0
MAX	0	42	1,920	446	761	338	407	54	13	2.6	0	0
MIN	0	0	22	45	106	59	55	15	2.8	0	0	0
AC-FT	0	722	16,900	8,870	14,070	8,860	7,310	1,820	394	27	0	0

CAL YR 1971 TOTAL 68,229.41 MEAN 187 MAX 8,000 MIN 0 AC-FT 135,300
WTR YR 1972 TOTAL 29,733.09 MEAN 81.2 MAX 1,920 MIN 0 AC-FT 58,980

PEAK DISCHARGE (BASE, 8,200 CFS).--No peak above base.

11466500 LAGUNA DE SANTA ROSA NEAR GRATON, CALIF.

LOCATION.--Lat 38°27'10", long 122°50'03", in Molinos Grant, Sonoma County, on downstream side of left bank pier of highway bridge, 0.2 mile downstream from Santa Rosa Creek, and 2 miles northeast of Graton.

PERIOD OF RECORD.--February 1940 to September 1949 (contents only), October 1964 to current year in reports of Geological Survey. October 1949 to September 1964 available in files of district office.

GAGE.--Water-stage recorder. Datum of gage is at mean sea level (levels by Corps of Engineers). Prior to Dec. 31, 1958, at site 75 ft downstream at same datum.

EXTREMES.--Current year: Maximum elevation, 55.6 ft Dec. 5.
Period of record: Maximum elevation, 73.3 ft Dec. 23, 1964.

REMARKS.--The laguna is a natural water channel and overflow basin connecting Santa Rosa Creek, Mark West Creek, and other smaller creeks with Russian River. During floods directions of flow may be either to or from Russian River and the laguna acts as a natural regulator of floods on lower Russian River. Figures given herein represent elevations above 55.0 ft.

ELEVATION, IN FEET, AT 2400, WATER YEAR OCTOBER 1971 TO SEPTEMBER 1972

DAY	OCT	NOV	DEC	JAN	FEB	MAR	APR	MAY	JUN	JUL	AUG	SEP
1					-							
2					-							
3					-							
4					-							
5					55.60							
6					-							
7					-							
8					-							
9					-							
10					-							
11					-							
12					-							
13					-							
14					-							
15					-							
16					-							
17					-							
18					-							
19					-							
20					-							
21					-							
22					-							
23					-							
24					-							
25					-							
26					-							
27					-							
28					-							
29					-							
30					------							
31		------			------		------		------			------
MEAN					-							
MAX					-							
MIN					-							

11467000 RUSSIAN RIVER NEAR GUERNEVILLE, CALIF.

LOCATION.--Lat 38°30'03", long 122°55'59", in NW¼NE¼ sec.35, T.8 N., R.10 W., Sonoma County, on left bank 0.6 mile downstream from Hobson Creek, and 3.4 miles east of Guerneville.

DRAINAGE AREA.--1,340 sq mi.

PERIOD OF RECORD.--October 1939 to current year. Monthly discharge only for some periods, published in WSP 1315-B. Prior to October 1954, published as "at Guerneville."

GAGE.--Water-stage recorder. Datum of gage is 17.25 ft above mean sea level. Prior to Oct. 1, 1954, nonrecording gage at bridge 5.3 miles downstream at datum 8.58 ft lower. Supplementary water-stage recorder 2.1 miles downstream used during periods of low flow 1948-54.

AVERAGE DISCHARGE.--33 years, 2,279 cfs (1,651,000 acre-ft per year).

EXTREMES.--Current year: Maximum discharge, 8,990 cfs Dec. 27 (gage height, 14.71 ft); minimum daily, 111 cfs May 24.
Period of record: Maximum discharge, 93,400 cfs Dec. 23, 1964 (gage height, 49.6 ft, from floodmarks); maximum gage height, 49.7 ft Dec. 23, 1955, from floodmarks; minimum daily discharge, 52 cfs May 30, 1964.

REMARKS.--Records good. Many diversions above station for irrigation. Flow also affected by diversion into basin (see REMARKS for East Fork Russian River stations), since November 1958 by storage in Lake Mendocino 77 miles upstream (see sta 11461800) and by diversion at Wohler pumping plant beginning in May 1959. Records of water temperatures, suspended-sediment discharge, and sediment and turbidity data for the current year are published in Part 2 of this report.

DISCHARGE, IN CUBIC FEET PER SECOND, WATER YEAR OCTOBER 1971 TO SEPTEMBER 1972

DAY	OCT	NOV	DEC	JAN	FEB	MAR	APR	MAY	JUN	JUL	AUG	SEP
1	202	210	286	1,340	2,050	3,520	535	800	230	145	202	172
2	216	210	298	1,240	1,850	3,030	514	770	206	151	172	169
3	200	196	406	1,130	1,690	3,500	493	706	194	168	164	176
4	196	165	573	985	2,270	3,670	475	686	186	178	164	177
5	192	158	619	830	5,340	3,030	526	674	164	185	162	177
6	182	153	458	718	5,660	2,630	1,020	650	156	190	164	166
7	178	152	422	674	4,090	2,320	985	508	149	193	166	166
8	178	150	447	634	3,150	2,170	755	403	145	179	160	161
9	180	147	367	586	2,590	1,920	650	375	131	167	158	160
10	182	148	332	546	2,240	1,910	582	355	162	156	158	164
11	200	181	396	526	1,930	1,830	722	335	191	146	170	196
12	190	228	725	634	1,690	1,630	1,330	315	198	143	180	244
13	182	283	1,460	690	1,530	1,510	2,540	290	191	141	184	236
14	180	340	872	698	1,400	1,360	1,940	320	188	139	186	214
15	168	302	550	666	1,300	1,190	1,560	355	163	140	188	166
16	170	242	421	646	1,210	1,080	1,470	345	146	145	200	166
17	176	216	339	634	1,140	990	1,330	338	140	167	180	178
18	180	200	282	630	1,070	920	1,200	330	140	201	190	178
19	208	189	246	630	1,010	850	1,010	310	136	168	186	182
20	210	189	223	654	970	785	905	292	148	170	188	190
21	212	187	209	694	980	730	850	290	156	166	192	178
22	210	182	1,930	1,620	1,090	805	845	298	166	154	188	168
23	220	177	3,200	4,260	2,030	1,060	815	267	178	149	182	166
24	220	177	2,050	4,530	3,110	1,020	840	111	180	144	180	168
25	212	173	4,450	4,180	3,060	865	845	230	181	143	181	178
26	200	170	3,790	4,460	3,100	845	775	254	169	143	179	204
27	200	177	7,360	3,800	3,180	740	730	260	159	149	182	248
28	195	200	4,020	3,670	2,730	666	765	260	152	154	182	244
29	195	240	2,550	2,960	3,680	622	755	262	141	150	182	240
30	195	291	1,960	2,570	------	582	805	256	140	164	178	250
31	210	------	1,600	2,280	------	556	------	246	------	180	174	------
TOTAL	6,039	6,033	42,841	50,115	67,140	48,336	28,567	11,891	4,986	4,968	5,522	5,682
MEAN	195	201	1,382	1,617	2,315	1,559	952	384	166	160	178	189
MAX	220	340	7,360	4,530	5,660	3,670	2,540	800	230	201	202	250
MIN	168	147	209	526	970	556	475	111	131	139	158	160
AC-FT	11,980	11,970	84,980	99,400	133,200	95,870	56,660	23,590	9,890	9,850	10,950	11,270

CAL YR 1971 TOTAL 525,179 MEAN 1,439 MAX 37,500 MIN 117 AC-FT 1,042,000
WTR YR 1972 TOTAL 282,120 MEAN 771 MAX 7,360 MIN 111 AC-FT 559,600

PEAK DISCHARGE (BASE, 23,000 CFS).--No peak above base.

11467600 GARCIA RIVER NEAR POINT ARENA, CALIF.

LOCATION.--Lat 38°55'35", long 123°37'45", in SW¼SW¼ sec.3, T.12 N., R.16 W., Mendocino County, on left bank 0.9 mile downstream from North Fork, and 3.5 miles northeast of town of Point Arena.

DRAINAGE AREA.--98.5 sq mi.

PERIOD OF RECORD.--Occasional low-flow measurements, water years 1951-56, and annual maximum, water years 1952-56, August 1962 to current year.

GAGE.--Water-stage recorder. Datum of gage is 55.31 ft above mean sea level. July 17, 1951, to Jan. 31, 1956, crest-stage only, at site 15 ft upstream at different datum.

AVERAGE DISCHARGE.--10 years, 328 cfs (237,600 acre-ft per year).

EXTREMES.--Current year: Maximum discharge, 2,060 cfs Dec. 22 (gage height, 7.21 ft); minimum daily, 8.2 cfs Sept. 24.
Period of record: Maximum discharge, 28,700 cfs Jan. 4, 1966 (gage height, 16.41 ft), from rating curve extended above 9,600 cfs on basis of slope-area measurement at gage height 15.11 ft; maximum gage-height, 16.48 ft Jan. 23, 1970; minimum daily discharge, 8.2 cfs Sept. 24, 1972.

REMARKS.--Records good. No regulation or diversion above station. Records of water temperatures for the current year are published in Part 2 of this report.

DISCHARGE, IN CUBIC FEET PER SECOND, WATER YEAR OCTOBER 1971 TO SEPTEMBER 1972

DAY	OCT	NOV	DEC	JAN	FEB	MAR	APR	MAY	JUN	JUL	AUG	SEP
1	14	12	65	196	248	695	119	87	36	21	13	9.4
2	12	12	101	171	210	660	114	83	35	21	12	9.4
3	11	11	133	147	185	695	109	80	34	20	12	10
4	10	11	129	126	192	611	105	78	33	20	12	10
5	10	11	94	113	260	512	194	75	32	20	12	10
6	9.5	11	122	105	252	416	273	73	31	20	12	10
7	9.5	11	98	100	240	378	199	70	31	20	11	9.4
8	9.5	11	77	93	220	305	174	70	30	19	11	9.4
9	9.5	12	94	88	203	293	157	68	32	19	11	9.4
10	9.5	21	108	80	182	385	144	62	33	18	10	9.4
11	9.5	32	102	70	164	333	184	59	31	18	10	8.8
12	9.5	48	788	66	147	303	551	57	30	18	10	8.8
13	9.5	151	324	62	135	276	551	54	30	18	9.7	8.8
14	9.5	98	200	60	123	251	404	53	30	17	9.4	8.8
15	9.5	62	158	56	115	230	324	51	29	16	9.4	8.8
16	9.5	46	133	54	108	210	265	50	29	16	10	8.8
17	9.5	39	115	52	103	194	226	49	28	16	13	8.8
18	9.5	34	91	50	98	178	200	54	28	16	13	8.8
19	9.5	32	77	54	98	165	178	49	27	16	12	8.8
20	13	31	65	62	147	154	161	49	25	16	12	8.8
21	13	29	65	141	126	145	146	50	25	16	11	8.8
22	11	28	1,060	405	315	262	136	51	25	16	11	8.8
23	13	26	518	1,390	578	249	130	46	25	16	11	8.8
24	13	26	554	625	560	205	155	44	25	16	11	8.2
25	12	26	548	660	482	193	124	43	24	15	10	8.8
26	11	32	695	554	494	173	113	42	24	15	10	23
27	11	77	1,050	584	434	161	107	41	24	14	10	35
28	10	119	566	530	566	150	101	40	23	14	10	25
29	11	108	385	428	1,010	141	94	39	23	14	10	17
30	11	87	285	350	------	132	90	38	22	14	10	15
31	12	------	228	295	------	125	------	37	------	14	10	------
TOTAL	331.0	1,254	9,028	7,767	7,995	9,180	5,828	1,742	854	529	338.5	342.8
MEAN	10.7	41.8	291	251	276	296	194	56.2	28.5	17.1	10.9	11.4
MAX	14	151	1,060	1,390	1,010	695	551	87	36	21	13	35
MIN	9.5	11	65	50	98	125	90	37	22	14	9.4	8.2
AC-FT	657	2,490	17,910	15,410	15,860	18,210	11,560	3,460	1,690	1,050	671	680

CAL YR 1971 TOTAL 78,443.0 MEAN 215 MAX 7,450 MIN 9.0 AC-FT 155,600
WTR YR 1972 TOTAL 45,189.3 MEAN 123 MAX 1,390 MIN 8.2 AC-FT 89,630

PEAK DISCHARGE (BASE, 5,000 CFS).--No peak above base.

NOTE.--No gage-height record May 10 to June 14.

11468000 NAVARRO RIVER NEAR NAVARRO, CALIF.

LOCATION.--Lat 39°10'20", long 123°40'06", in SE¼ sec.7, T.15 N., R.16 W., Mendocino County, on right bank 2.9 miles downstream from North Fork, 5.2 miles upstream from mouth, and 6.8 miles west of Navarro.

DRAINAGE AREA.--303 sq mi.

PERIOD OF RECORD.--October 1950 to current year.

GAGE.--Water-stage recorder. Datum of gage is 4.79 ft above mean sea level. Prior to Oct. 1, 1969, at site 0.2 mile upstream at datum 1.86 ft higher.

AVERAGE DISCHARGE.--22 years, 517 cfs (374,600 acre-ft per year).

EXTREMES.--Current year: Maximum discharge, 2,860 cfs Dec. 22 (gage height, 8.08 ft); minimum daily, 3.8 cfs Aug. 15, 16.

Period of record: Maximum discharge, 64,500 cfs Dec. 22, 1955 (gage height, 40.60 ft, site and datum then in use), from rating curve extended above 19,000 cfs on basis of slope-area measurement of maximum flow; minimum daily, 3.8 cfs Aug. 15, 16, 1972.

Flood in December 1937 reached a stage of 38.2 ft, from floodmarks.

REMARKS.--Records good. No regulation or diversion above station. Records of water temperatures for the current year are published in Part 2 of this report.

REVISIONS (WATER YEARS).--WSP 1445: 1954(M).

DISCHARGE, IN CUBIC FEET PER SECOND, WATER YEAR OCTOBER 1971 TO SEPTEMBER 1972

DAY	OCT	NOV	DEC	JAN	FEB	MAR	APR	MAY	JUN	JUL	AUG	SEP
1	18	15	107	295	458	1,140	165	105	35	14	6.0	4.7
2	17	15	144	266	392	1,150	156	100	33	15	6.0	4.5
3	15	15	249	238	336	1,500	148	95	33	15	6.0	4.4
4	14	12	263	198	350	1,360	138	91	32	15	6.0	4.4
5	13	14	179	170	518	1,030	160	87	31	14	5.6	4.6
6	11	16	208	150	494	790	280	83	30	14	5.6	4.8
7	11	16	214	142	413	606	218	83	28	14	5.8	4.6
8	11	16	146	128	367	502	182	83	27	14	6.0	4.4
9	11	16	134	119	332	423	165	79	30	13	5.5	4.4
10	11	18	172	107	301	438	152	74	32	12	5.1	4.4
11	11	36	198	100	271	391	181	70	31	11	4.7	4.4
12	11	75	572	94	244	342	514	67	30	11	4.4	4.4
13	11	121	577	91	223	310	902	63	26	11	4.0	4.4
14	10	144	304	88	205	282	606	61	25	10	3.9	5.1
15	9.6	85	227	82	193	259	463	58	24	9.8	3.8	5.2
16	9.6	57	172	78	178	233	375	55	24	9.2	3.8	4.8
17	10	45	140	74	165	215	317	58	24	9.0	4.3	5.0
18	10	38	121	70	158	203	281	60	22	8.7	4.4	5.6
19	11	34	107	78	150	185	248	56	22	8.6	4.4	5.6
20	12	31	93	90	168	175	220	56	22	8.8	4.6	5.6
21	13	28	90	140	170	163	199	59	20	8.4	5.4	5.6
22	13	27	1,520	398	265	244	182	60	20	8.4	5.6	5.6
23	16	26	1,060	2,100	1,010	430	171	55	19	7.8	5.5	5.6
24	20	26	1,090	1,170	1,100	310	191	52	18	8.1	5.2	5.8
25	20	25	1,300	1,050	1,010	292	171	49	17	8.7	4.8	6.7
26	17	33	1,090	938	1,110	253	149	47	17	8.9	4.8	18
27	15	72	1,860	996	983	233	139	46	17	7.8	4.8	28
28	15	130	982	992	920	218	127	43	16	7.7	4.8	30
29	14	165	613	794	1,560	205	115	40	16	7.2	4.8	23
30	14	146	435	646	------	185	109	38	14	7.2	4.9	19
31	14	------	345	538	------	178	------	36	------	6.4	4.8	------
TOTAL	408.2	1,497	14,712	12,420	14,044	14,245	7,424	2,009	735	323.7	155.3	242.6
MEAN	13.2	49.9	475	401	484	460	247	64.8	24.5	10.4	5.01	8.09
MAX	20	165	1,860	2,100	1,560	1,500	902	105	35	15	6.0	30
MIN	9.6	12	90	70	150	163	109	36	14	6.4	3.8	4.4
AC-FT	810	2,970	29,180	24,640	27,860	28,250	14,730	3,980	1,460	642	308	481

CAL YR 1971 TOTAL 128,070.3 MEAN 351 MAX 11,600 MIN 7.6 AC-FT 254,000
WTR YR 1972 TOTAL 68,215.8 MEAN 186 MAX 2,100 MIN 3.8 AC-FT 135,300

PEAK DISCHARGE (BASE, 7,000 CFS).--No peak above base.

11468500 NOYO RIVER NEAR FORT BRAGG, CALIF.

LOCATION.--Lat 39°25'42", long 123°44'12", in NE¼ sec.15, T.18 N., R.17 W., Mendocino County, on right bank 0.7 mile downstream from South Fork, and 3.5 miles east of Fort Bragg.

DRAINAGE AREA.--106 sq mi.

PERIOD OF RECORD.--August 1951 to current year.

GAGE.--Water-stage recorder. Datum of gage is 11.73 ft above mean sea level.

AVERAGE DISCHARGE.--21 years, 216 cfs (156,500 acre-ft per year); median of yearly mean discharges, 210 cfs (152,000 acre-ft per year).

EXTREMES.--Current year: Maximum discharge, 3,770 cfs Jan. 23 (gage height, 12.95 ft, from peak-stage indicator); minimum daily, 3.9 cfs Sept. 11, 12, 14, 15, 22.
Period of record: Maximum discharge, 24,000 cfs Dec. 22, 1964 (gage height, 26.30 ft), from rating curve extended above 7,400 cfs on basis of slope-conveyance study; minimum daily, 0.80 cfs Sept. 12, 1968.

REMARKS.--Records good. No regulation or diversion above station. Records of water temperatures for the current year are published in Part 2 of this report.

DISCHARGE, IN CUBIC FEET PER SECOND, WATER YEAR OCTOBER 1971 TO SEPTEMBER 1972

DAY	OCT	NOV	DEC	JAN	FEB	MAR	APR	MAY	JUN	JUL	AUG	SEP
1	14	8.5	53	79	230	680	126	62	25	15	7.1	4.5
2	10	8.5	112	70	210	800	117	59	25	15	7.0	4.5
3	8.5	8.0	156	63	192	1,350	109	56	24	15	6.7	4.5
4	8.0	7.5	130	57	189	880	102	54	24	15	6.4	4.6
5	7.5	7.5	95	52	186	610	113	51	24	15	6.2	4.7
6	7.0	7.5	263	48	176	539	131	49	22	14	5.8	4.9
7	6.5	7.5	158	45	167	398	121	50	22	14	5.6	4.5
8	6.1	7.5	96	43	159	308	109	51	22	14	5.4	4.3
9	7.0	8.0	112	40	148	259	102	46	29	13	5.2	4.1
10	11	9.0	163	38	137	233	96	44	31	13	5.0	4.0
11	5.7	16	170	36	127	215	119	42	24	13	4.9	3.9
12	5.7	27	482	35	115	191	241	40	23	12	4.8	3.9
13	5.7	84	365	34	108	177	332	37	22	12	4.8	4.2
14	6.1	57	209	33	100	162	277	36	21	12	5.5	3.9
15	5.7	31	142	31	93	150	228	34	20	11	5.9	3.9
16	6.1	21	104	30	89	139	190	34	20	11	6.4	4.0
17	6.1	15	82	29	82	129	164	39	20	11	7.8	4.1
18	6.5	13	70	28	82	120	146	36	19	11	7.2	4.3
19	7.5	11	61	39	97	112	131	35	19	11	6.9	4.2
20	10	10	54	56	84	105	118	37	19	11	6.5	4.1
21	11	9.5	52	920	110	100	107	37	18	9.9	6.0	4.0
22	10	9.5	183	2,100	170	152	93	35	18	9.6	5.7	3.9
23	12	9.0	284	2,700	240	194	96	33	18	9.4	5.5	4.0
24	11	11	362	840	600	182	118	32	18	9.0	5.4	4.3
25	11	12	428	630	750	240	101	31	18	8.6	5.2	4.7
26	9.0	26	314	540	1,300	234	90	29	17	8.4	5.0	26
27	8.5	65	236	450	850	215	82	29	16	8.0	5.0	92
28	8.0	84	165	370	840	192	76	28	16	7.8	4.9	35
29	7.5	95	132	320	930	171	69	27	16	7.6	4.8	22
30	7.5	78	108	290	------	152	65	26	15	7.5	4.7	15
31	8.5	------	91	250	------	138	------	26	------	7.3	4.6	------
TOTAL	254.7	763.5	5,432	10,296	8,561	9,527	3,969	1,225	625	351.1	177.9	296.0
MEAN	8.22	25.5	175	332	295	307	132	39.5	20.8	11.3	5.74	9.87
MAX	14	95	482	2,700	1,300	1,350	332	62	31	15	7.8	92
MIN	5.7	7.5	52	28	82	100	65	26	15	7.3	4.6	3.9
AC-FT	505	1,510	10,770	20,420	16,980	18,900	7,870	2,430	1,240	696	353	587

CAL YR 1971 TOTAL 68,887.3 MEAN 189 MAX 6,750 MIN 5.3 AC-FT 136,600
WTR YR 1972 TOTAL 41,478.2 MEAN 113 MAX 2,700 MIN 3.9 AC-FT 82,270

PEAK DISCHARGE (BASE, 2,400 CFS).--Jan. 23 (time unknown) 3,770 cfs (12.95 ft).

NOTE.--No gage-height record Jan. 21 to Feb. 2.

11468600 MIDDLE FORK TENMILE RIVER NEAR FORT BRAGG, CALIF.

LOCATION.--Lat 39°34'22", long 123°41'57", in NE¼NE¼ sec.25, T.20 N., R.17 W., Mendocino County, on right bank 0.8 mile upstream from confluence with North Fork Tenmile River, and 10 miles northeast of Fort Bragg.

DRAINAGE AREA.--32.9 sq mi.

PERIOD OF RECORD.--Occasional low-flow measurements, water years 1951-56, 1961. August 1964 to current year.

GAGE.--Water-stage recorder. Datum of gage is 53.88 ft above mean sea level.

AVERAGE DISCHARGE.--8 years, 85.6 cfs (62,000 acre-ft per year).

EXTREMES.--Current year: Maximum discharge, 2,370 cfs Jan. 23 (gage height, 10.13 ft); minimum daily, 2.8 cfs Sept. 10, 11, 13.
Period of record: Maximum discharge, 5,670 cfs Dec. 21, 1964 (gage height, 15.34 ft); minimum daily, 1.3 cfs Sept. 27-30, 1970.

REMARKS.--Records good. No regulation or diversion above station. Records of water temperatures for the current year are published in Part 2 of this report.

DISCHARGE, IN CUBIC FEET PER SECOND, WATER YEAR OCTOBER 1971 TO SEPTEMBER 1972

DAY	OCT	NOV	DEC	JAN	FEB	MAR	APR	MAY	JUN	JUL	AUG	SEP
1	4.6	5.0	38	41	103	395	62	30	17	8.6	5.0	3.4
2	4.2	4.6	62	36	85	419	56	29	17	8.2	5.0	3.4
3	4.6	4.2	90	33	73	814	51	27	16	8.6	5.0	3.4
4	4.2	4.2	71	30	73	518	48	27	16	8.6	5.0	3.5
5	4.2	4.2	52	27	74	322	55	27	16	8.2	4.6	3.5
6	4.2	4.2	181	26	66	222	68	26	15	8.2	4.6	3.5
7	4.2	4.2	97	24	61	178	59	26	15	8.2	4.2	3.2
8	4.2	4.2	58	23	56	142	52	26	14	7.8	4.2	2.9
9	4.2	6.2	97	22	51	119	48	25	13	7.8	3.8	2.9
10	4.2	7.4	123	21	48	108	45	24	12	7.8	3.4	2.8
11	4.2	15	116	20	44	103	64	24	12	7.4	3.4	2.8
12	4.2	28	232	19	40	90	115	24	11	7.4	3.4	2.9
13	4.2	68	170	18	37	83	120	23	11	7.4	3.4	2.8
14	3.8	35	118	18	35	75	104	23	11	7.0	3.8	2.9
15	3.8	31	85	17	34	69	88	23	11	7.0	3.8	2.9
16	3.8	21	63	16	32	64	75	23	10	6.6	5.2	3.0
17	3.8	16	50	16	30	58	66	23	10	6.6	6.0	3.0
18	3.8	13	43	15	29	53	58	22	10	7.0	5.2	3.2
19	4.6	12	36	20	30	50	53	22	10	7.0	4.9	3.1
20	6.2	10	32	26	43	47	48	22	10	6.6	4.6	2.9
21	5.4	9.8	31	553	37	44	44	22	10	6.6	4.4	3.0
22	5.0	9.0	130	1,220	103	112	41	21	9.8	6.6	4.1	2.9
23	7.8	9.0	150	1,470	185	112	41	21	9.8	6.6	4.1	3.0
24	7.0	9.8	206	532	336	135	51	20	9.7	6.6	4.1	3.2
25	5.4	11	210	383	425	182	40	20	9.5	6.2	3.9	3.7
26	5.0	14	158	291	786	162	37	19	9.3	5.8	3.8	19
27	5.0	66	116	246	546	135	35	19	9.0	5.4	3.7	44
28	4.6	59	84	203	500	110	33	19	8.9	5.4	3.7	20
29	4.2	72	67	174	570	92	33	18	8.6	5.0	3.6	15
30	4.6	62	54	146	------	79	32	18	8.6	5.4	3.5	13
31	5.8	------	47	123	------	69	------	17	------	5.0	3.4	------
TOTAL	145.0	619.0	3,067	5,809	4,532	5,161	1,722	710	350.2	216.6	130.8	188.8
MEAN	4.68	20.6	98.9	187	156	166	57.4	22.9	11.7	6.99	4.22	6.29
MAX	7.8	72	232	1,470	786	814	120	30	17	8.6	6.0	44
MIN	3.8	4.2	31	15	29	44	32	17	8.6	5.0	3.4	2.8
AC-FT	288	1,230	6,080	11,520	8,990	10,240	3,420	1,410	695	430	259	374

CAL YR 1971 TOTAL 27,604.8 MEAN 75.6 MAX 1,850 MIN 2.1 AC-FT 54,750
WTR YR 1972 TOTAL 22,651.4 MEAN 61.9 MAX 1,470 MIN 2.8 AC-FT 44,930

PEAK DISCHARGE (BASE, 900 CFS).--Jan. 23 (0115) 2,370 cfs (10.13 ft).

11469000 MATTOLE RIVER NEAR PETROLIA, CALIF.

LOCATION.--Lat 40°18'42", long 124°15'48", in NW¼ sec.11, T.2 S., R.2 W., Humboldt County, on right bank 0.2 mile upstream from Clear Creek, 1.5 miles southeast of Petrolia, and 1.7 miles upstream from North Fork.

DRAINAGE AREA.--240 sq mi.

PERIOD OF RECORD.--October 1911 to December 1913, October 1950 to current year. Monthly discharge only for some periods, published in WSP 1315-B.

GAGE.--Water-stage recorder. Altitude of gage is 40 ft (from topographic map). November 1911 to December 1913, nonrecording gages at several sites upstream within 0.3 mile of present site at various datums. Dec. 11, 1950, to July 14, 1955, at site 0.3 mile upstream at datum 7.48 ft higher. July 15, 1955, to Oct. 26, 1967, at site 0.4 mile downstream at different datum.

AVERAGE DISCHARGE.--24 years, 1,363 cfs (987,500 acre-ft per year).

EXTREMES.--Current year: Maximum discharge, 46,000 cfs Jan. 22 (gage height, 20.50 ft); minimum daily, 26 cfs Sept. 25.
Period of record: Maximum discharge, 90,400 cfs Dec. 22, 1955 (gage height, 29.60 ft, site and datum then in use), from rating curve extended above 24,000 cfs on basis of slope-area measurement of maximum flow; minimum observed, 20 cfs Sept. 1, 2, 15-30, Oct. 27-31, 1913, Sept. 14-18, 25, Oct. 10-16, 1970.

REMARKS.--Records good. Diversions for irrigation of about 350 acres above station. Records of chemical analyses and water temperatures for the current year are published in Part 2 of this report.

REVISIONS (WATER YEARS).--WSP 1285: 1912-13.

DISCHARGE, IN CUBIC FEET PER SECOND, WATER YEAR OCTOBER 1971 TO SEPTEMBER 1972

DAY	OCT	NOV	DEC	JAN	FEB	MAR	APR	MAY	JUN	JUL	AUG	SEP
1	118	55	2,010	1,540	1,920	6,220	1,090	616	260	93	47	31
2	77	50	2,500	1,420	1,720	6,140	1,020	591	250	90	46	31
3	60	48	2,380	1,330	1,630	7,950	929	566	240	89	45	30
4	53	48	2,280	1,210	1,710	5,470	880	545	235	86	44	31
5	48	46	2,280	1,020	1,860	3,950	1,630	524	230	84	42	30
6	46	46	3,690	1,090	1,790	2,920	1,900	500	220	81	42	31
7	45	47	2,580	1,050	1,760	2,180	1,570	518	219	79	41	30
8	42	45	2,090	1,010	1,660	1,890	1,480	590	210	77	40	29
9	41	1,280	2,310	972	1,560	1,790	1,320	500	245	75	39	29
10	40	7,050	2,390	933	1,470	2,570	1,200	474	290	72	38	29
11	39	2,800	2,310	898	1,380	3,290	1,200	448	280	71	37	28
12	39	4,210	5,510	901	1,310	2,850	3,940	438	200	69	36	28
13	39	7,380	4,180	862	1,250	2,830	3,140	422	190	66	36	28
14	39	3,320	3,260	829	1,210	2,410	2,320	406	180	63	36	28
15	38	1,940	2,590	805	1,160	2,070	1,850	391	181	62	37	28
16	38	1,410	2,060	785	1,110	1,800	1,560	396	164	59	42	28
17	36	1,180	1,800	770	1,070	1,570	1,360	412	155	59	70	28
18	35	1,030	1,620	761	1,040	1,390	1,220	386	150	57	62	28
19	62	929	1,460	773	1,170	1,240	1,110	375	141	59	49	28
20	326	861	1,350	1,350	1,990	1,140	1,020	360	138	59	46	28
21	154	806	1,310	8,000	1,580	1,090	937	375	132	57	45	28
22	96	761	3,790	19,100	3,790	2,640	869	370	128	57	42	28
23	96	733	4,130	19,800	4,370	2,350	882	344	121	57	40	28
24	90	843	6,380	6,590	5,120	2,430	1,330	331	118	56	38	27
25	75	833	5,490	6,270	4,780	2,780	1,020	322	114	55	37	26
26	66	2,570	4,300	4,660	13,600	2,180	874	313	110	53	36	129
27	63	3,200	3,490	3,730	9,120	1,870	798	309	108	52	35	676
28	57	2,960	2,630	2,910	16,300	1,620	742	300	105	50	34	216
29	46	3,440	2,240	2,380	12,100	1,440	695	287	100	50	34	118
30	52	2,630	1,940	2,050	------	1,290	657	277	97	49	34	92
31	55	------	1,710	1,860	------	1,180	------	270	------	47	33	------
TOTAL	2,111	52,551	88,060	97,659	100,530	82,540	40,543	12,956	5,311	2,033	1,283	1,949
MEAN	68.1	1,752	2,841	3,150	3,467	2,663	1,351	418	177	65.6	41.4	65.0
MAX	326	7,380	6,380	19,800	16,300	7,950	3,940	616	290	93	70	676
MIN	35	45	1,310	761	1,040	1,090	657	270	97	47	33	26
AC-FT	4,190	104,200	174,700	193,700	199,400	163,700	80,420	25,700	10,530	4,030	2,540	3,870

CAL YR 1971 TOTAL 462,523 MEAN 1,267 MAX 32,000 MIN 30 AC-FT 917,400
WTR YR 1972 TOTAL 487,526 MEAN 1,332 MAX 19,800 MIN 26 AC-FT 967,000

PEAK DISCHARGE (BASE, 15,000 CFS)

DATE	TIME	G.H.	DISCHARGE	DATE	TIME	G.H.	DISCHARGE
1-22	2245	20.50	46,000	2-28	2200	13.80	19,200
2-26	0845	12.85	16,400				

NOTE.--No gage-height record May 30 to July 12.

11470000 LAKE PILLSBURY NEAR POTTER VALLEY, CALIF.

LOCATION.--Lat 39°24'30", long 122°57'30", on line between secs.14 and 23, T.18 N., R.10 W., Lake County, Mendocino National Forest, at Scott Dam near right bank of Eel River, 0.3 mile downstream from Rice Fork, and 10.2 miles northeast of town of Potter Valley.

DRAINAGE AREA.--289 sq mi.

PERIOD OF RECORD.--October 1922 to September 1928 (daily gage heights only), October 1928 to current year. Monthend contents only for some periods, published in WSP 1315-B. Prior to October 1953, published as "at Hullville."

GAGE.--Water-stage recorder and nonrecording gage. Datum of gage is 81.7 ft below mean sea level (river-profile survey). Prior to Jan. 26, 1950, nonrecording gage at same site and datum.

EXTREMES.--Current year: Maximum contents, 86,800 acre-ft May 3-9; maximum gage height, 1,910.00 ft May 3; minimum contents, 38,900 acre-ft Dec. 20 (gage height, 1,883.41 ft).
Period of record: Maximum contents, 95,600 acre-ft May 13, 16, 1925 (gage height, 1,910.8 ft); maximum gage height, 1,911.84 ft Dec. 22, 1964, from floodmarks; minimum contents, 10 acre-ft Dec. 9, 10, 1931 (gage height, 1,822.5 ft).

REMARKS.--Reservoir is formed by concrete overflow type dam; storage began in December 1921. Usable capacity, 86,400 acre-ft between gage heights 1,822.4 (sill of outlet gate) and 1,910.0 ft (top of spillway gates); dead storage, 397 acre-ft; spillway at gage height 1,900.0 ft. Water is released down Eel River to Van Arsdale Reservoir, from which it is diverted through tunnel to Potter Valley powerhouse; part is then used for irrigation and remainder flows into East Fork Russian River. Records given herein represent total contents.

COOPERATION.--Record of contents furnished by Pacific Gas and Electric Co. in connection with a Federal Power Commission project.

CAPACITY TABLE (GAGE HEIGHT, IN FEET, AND CONTENTS, IN ACRE-FEET)

1,822.4	397	1,840	3,990	1,865	19,100	1,890	48,400
1,824	534	1,845	6,080	1,870	23,500	1,895	56,700
1,827	864	1,850	8,690	1,875	28,700	1,900	65,800
1,830	1,310	1,855	11,800	1,880	34,500	1,905	75,800
1,835	2,410	1,860	15,200	1,885	41,100	1,910	86,800

CONTENTS, IN ACRE-FEET, AT 2400, WATER YEAR OCTOBER 1971 TO SEPTEMBER 1972

DAY	OCT	NOV	DEC	JAN	FEB	MAR	APR	MAY	JUN	JUL	AUG	SEP
1	56,872	46,238	39,323	49,996	66,820	68,519	77,955	86,671	84,211	81,991	66,743	55,425
2	56,473	45,861	39,256	50,012	66,762	68,775	78,019	86,740	84,189	81,859	66,165	55,135
3	56,111	45,471	39,189	50,043	66,801	68,972	78,169	86,785	84,167	81,705	65,494	54,880
4	55,767	45,053	39,215	50,091	67,500	68,597	78,340	86,785	84,122	81,573	64,904	54,609
5	55,408	44,671	39,296	50,123	67,617	68,165	79,871	86,785	84,100	81,420	64,298	54,171
6	55,084	44,262	39,377	50,155	67,442	67,871	81,091	86,785	84,055	81,244	63,678	53,568
7	54,796	43,871	39,404	50,107	67,267	67,695	81,969	86,785	83,988	81,069	63,210	52,953
8	54,474	43,467	39,377	50,028	67,150	67,539	82,543	86,785	83,921	80,873	62,875	52,260
9	54,188	43,381	39,390	49,868	67,072	67,344	83,053	86,671	83,899	80,741	62,560	51,558
10	53,785	43,323	39,417	49,630	66,995	67,208	83,675	86,558	83,832	80,414	62,227	50,877
11	53,368	43,510	39,430	49,393	66,937	67,754	84,749	86,376	83,765	79,893	61,896	50,251
12	52,936	43,496	39,511	49,140	66,898	68,795	85,628	86,149	83,720	79,308	61,584	49,614
13	52,556	43,266	39,633	48,920	66,879	69,798	85,380	85,900	83,631	78,705	61,273	48,998
14	52,145	43,023	39,660	48,685	66,859	70,581	85,538	85,673	83,564	78,062	60,963	48,388
15	51,769	42,795	39,552	48,606	66,820	71,168	85,719	85,447	83,475	77,443	60,672	47,751
16	51,395	42,553	39,444	48,638	66,801	71,818	85,809	85,312	83,408	76,784	60,364	47,136
17	51,006	42,299	39,350	48,669	66,762	72,389	85,719	85,087	83,364	76,213	60,057	46,480
18	50,620	41,975	39,215	48,700	66,724	72,779	85,764	84,907	83,297	75,582	59,751	45,816
19	50,475	41,653	39,095	48,716	66,762	73,046	85,990	84,817	83,186	74,912	59,446	45,171
20	50,299	41,332	38,961	49,582	66,820	73,273	86,194	84,862	83,119	74,287	59,143	44,554
21	49,916	41,027	40,108	52,014	66,879	73,417	86,262	84,817	83,030	73,644	58,840	43,943
22	49,408	40,710	41,975	56,508	67,539	74,474	86,353	84,705	82,964	72,984	58,538	43,237
23	48,998	40,449	43,582	66,492	68,263	75,100	86,580	84,570	82,853	72,369	58,238	42,568
24	48,591	40,244	45,245	67,891	68,538	75,834	86,603	84,480	82,787	71,757	57,921	42,003
25	48,201	40,053	46,952	67,812	68,381	76,572	86,580	84,368	82,698	71,147	57,640	41,513
26	47,782	39,849	48,294	67,500	68,716	77,038	86,626	84,301	82,587	70,481	57,307	41,027
27	47,381	39,660	49,408	67,325	68,361	77,379	86,740	84,301	82,477	69,878	57,028	40,573
28	47,213	39,525	49,996	67,072	69,718	77,656	86,740	84,301	82,344	69,230	56,698	40,149
29	47,197	39,457	49,996	66,956	69,190	77,805	86,626	84,279	82,234	68,597	56,439	39,633
30	47,044	39,390	49,996	66,917	------	77,891	86,626	84,279	82,101	67,969	56,128	39,095
31	46,632	------	49,996	66,879	------	77,955	------	84,256	------	67,364	55,767	------
MAX	56,872	46,238	49,996	67,891	69,718	77,955	86,740	86,785	84,211	81,991	66,743	55,425
MIN	46,632	39,390	38,961	48,606	66,724	67,208	77,955	84,256	82,101	67,364	55,767	39,095
(a)	1,888.84	1,883.77	1,890.99	1,900.58	1,901.76	1,906.00	1,909.93	1,908.88	1,907.91	1,900.83	1,894.48	1,883.55
(b)	-10,700	-7,240	+10,600	+16,900	+2,310	+8,770	+8,670	-2,370	-2,160	-14,700	-11,600	-16,700

CAL YR 1971 b -17,700
WTR YR 1972 b -18,200

a Elevation, in feet, at end of month.
b Change in contents, in acre-feet, rounded to Geological Survey standards.

11470500 EEL RIVER BELOW SCOTT DAM, NEAR POTTER VALLEY, CALIF.

LOCATION.--Lat 39°24'29", long 122°58'13", in SE¼ sec.15, T.18 N., R.10 W., Lake County, Mendocino National Forest, on left bank 0.4 mile upstream from Soda Creek, 0.7 mile downstream from Scott Dam, and 9.7 miles northeast of town of Potter Valley.

DRAINAGE AREA.--290 sq mi.

PERIOD OF RECORD.--October 1922 to current year. Monthly discharge only for some periods, published in WSP 1315-B. Prior to October 1929, published as South Eel River at Hullville, and October 1929 to September 1953 as "at Hullville."

GAGE.--Water-stage recorder. Altitude of gage is 1,740 ft (from topographic map). Prior to Dec. 15, 1930, at datum 3.00 ft higher.

AVERAGE DISCHARGE.--50 years, 543 cfs (393,400 acre-ft per year).

EXTREMES.--Current year: Maximum discharge, 4,190 cfs Feb. 29 (gage height, 10.51 ft); minimum daily, 13 cfs Oct. 29.
Period of record: Maximum discharge, 56,300 cfs Dec. 22, 1964 (gage height, 24.24 ft, from floodmarks), from rating curve extended above 9,400 cfs on basis of computed flow over Scott Dam at gage heights 18.50 and 21.85 ft; minimum daily, 0.1 cfs Sept. 8, 1924.

REMARKS.--Flow regulated by Lake Pillsbury 0.7 mile upstream (see sta 11470000). No diversion above station Records of water temperatures for the current year are published in Part 2 of this report.

COOPERATION.--Records collected by Pacific Gas and Electric Co., under general supervision of the Geological Survey, in connection with a Federal Power Commission project.

REVISIONS (WATER YEARS).--WSP 1315-B: 1923(M), 1938(M). WSP 1395: Drainage area. WRD Calif. 1967: 1963-64.

DISCHARGE, IN CUBIC FEET PER SECOND, WATER YEAR OCTOBER 1971 TO SEPTEMBER 1972

DAY	OCT	NOV	DEC	JAN	FEB	MAR	APR	MAY	JUN	JUL	AUG	SEP
1	202	223	244	268	445	2,410	343	261	124	92	324	159
2	202	223	246	268	394	2,110	343	252	114	80	328	159
3	202	223	246	268	381	2,670	274	253	114	80	330	159
4	202	221	244	270	725	2,400	257	253	108	80	330	159
5	202	230	244	270	1,140	1,920	142	255	103	80	328	244
6	223	237	244	266	1,060	1,550	198	255	103	80	328	322
7	234	235	232	189	885	1,290	246	255	102	80	250	330
8	234	235	216	282	749	1,130	248	257	101	86	169	335
9	152	72	216	290	652	1,140	223	278	101	91	162	339
10	185	63	216	294	583	1,080	131	298	99	168	162	341
11	185	16	216	298	525	694	223	312	99	314	162	343
12	188	101	199	302	483	312	917	318	99	328	160	343
13	194	237	182	302	458	310	1,150	318	99	337	160	341
14	194	237	198	302	445	320	717	318	99	337	160	341
15	194	235	219	308	434	322	717	282	86	335	160	339
16	218	235	219	312	419	322	721	276	77	335	160	339
17	235	232	218	312	401	332	721	276	77	335	160	341
18	235	101	221	312	381	347	562	274	76	332	160	345
19	107	234	224	314	367	347	387	276	76	332	160	343
20	83	234	224	286	413	347	387	276	75	330	160	343
21	250	234	228	172	442	356	387	270	76	330	160	341
22	284	234	171	74	629	296	363	265	76	328	160	341
23	288	237	107	27	1,360	239	328	243	76	328	160	341
24	224	244	109	1,040	2,170	268	439	218	75	326	160	339
25	219	244	108	1,390	1,820	268	419	218	75	326	160	339
26	219	246	163	1,110	2,230	280	316	178	75	328	160	298
27	219	244	211	935	2,070	298	300	149	75	330	160	312
28	107	246	237	729	2,230	312	332	139	88	330	160	292
29	13	246	268	593	3,750	322	343	132	87	328	159	308
30	98	246	270	521	------	343	290	132	97	328	159	328
31	223	------	268	483	------	343	------	132	------	326	159	------
TOTAL	6,015	6,245	6,608	12,787	28,041	24,678	12,424	7,619	2,732	7,840	6,070	9,204
MEAN	194	208	213	412	967	796	414	246	91.1	253	196	307
MAX	288	246	270	1,390	3,750	2,670	1,150	318	124	337	330	345
MIN	13	16	107	27	367	239	131	132	75	80	159	159
AC-FT	11,930	12,390	13,110	25,360	55,620	48,950	24,640	15,110	5,420	15,550	12,040	18,260

CAL YR 1971 TOTAL 205,857 MEAN 564 MAX 13,500 MIN 13 AC-FT 408,300
WTR YR 1972 TOTAL 130,263 MEAN 356 MAX 3,750 MIN 13 AC-FT 258,400

11471000 POTTER VALLEY POWERHOUSE TAILRACE NEAR POTTER VALLEY, CALIF.

LOCATION.--Lat 39°21'42", long 123°07'38", in SW¼NW¼ sec.6, T.17 N., R.11 W., Mendocino County, on right bank 100 ft downstream from powerhouse of Pacific Gas and Electric Co., 1.8 miles southwest of Van Arsdale Dam, and 2.9 miles northwest of town of Potter Valley.

PERIOD OF RECORD.--December 1909 to current year. Prior to October 1922, monthly discharge only, published in WSP 1315-B. Prior to October 1931, published as Snow Mountain Water and Power Co.'s tailrace near Potter Valley.

GAGE.--Water-stage recorder and Parshall flume. Altitude of gage is 1,020 ft (from topographic map). No gage prior to Dec. 1, 1922. Dec. 1, 1922, to Sept. 30, 1923, nonrecording gage and Oct. 1, 1923, to Apr. 12, 1950, water-stage recorder, at site 50 ft upstream at different datum.

AVERAGE DISCHARGE.--62 years (1910-72), 202 cfs (146,300 acre-ft per year).

EXTREMES.--1922 to current year: Maximum daily discharge, 348 cfs Apr. 24, 1953; no flow at times in several years.

REMARKS.--Water is diverted from Eel River above Van Arsdale Dam. After passing through powerhouse, part of it is used for irrigation in Potter Valley and remainder flows into East Fork Russian River. Water for irrigation diverted from tailrace is included in figures of discharge. Records of water temperatures for the current year are published in Part 2 of this report.

COOPERATION.--Records collected by Pacific Gas and Electric Co., under general supervision of the Geological Survey, in connection with a Federal Power Commission project.

REVISIONS (WATER YEARS).--WSP 1395: 1950.

DISCHARGE, IN CUBIC FEET PER SECOND, WATER YEAR OCTOBER 1971 TO SEPTEMBER 1972

DAY	OCT	NOV	DEC	JAN	FEB	MAR	APR	MAY	JUN	JUL	AUG	SEP
1	178	199	229	310	299	196	316	285	122	82	313	148
2	178	195	231	310	300	198	318	284	108	83	314	140
3	178	194	231	309	265	242	235	277	111	83	316	135
4	178	179	231	299	229	303	248	277	106	84	317	135
5	175	183	231	309	230	304	208	275	102	83	318	190
6	186	191	217	307	230	293	272	273	103	80	318	319
7	201	195	194	212	230	254	274	270	101	85	266	321
8	204	193	201	283	229	201	269	186	105	88	133	321
9	157	110	227	300	230	221	273	277	100	92	165	321
10	154	60	233	312	229	302	210	313	102	119	144	321
11	163	43	231	307	226	313	170	314	101	321	147	321
12	162	28	233	312	222	313	220	312	106	319	147	321
13	166	162	231	297	216	313	265	313	102	328	145	321
14	166	166	230	315	221	312	265	316	94	325	143	322
15	165	184	231	313	230	312	265	252	90	321	140	321
16	171	188	231	313	229	313	265	269	82	319	142	319
17	200	183	231	313	229	312	259	269	84	321	149	320
18	204	54	231	313	235	313	269	269	85	325	150	321
19	151	196	231	312	235	309	279	271	87	325	147	321
20	4.5	208	231	312	235	316	290	275	89	320	146	321
21	196	212	226	310	235	316	289	274	94	322	144	321
22	233	209	253	307	237	316	284	259	86	322	143	318
23	245	209	266	283	235	315	284	227	85	322	143	313
24	217	215	313	307	207	315	287	182	83	322	141	312
25	190	222	322	307	202	316	288	161	86	320	147	312
26	181	223	276	303	215	316	287	163	84	320	139	315
27	177	241	291	297	213	316	284	121	86	317	140	316
28	139	272	290	299	208	316	287	123	85	316	142	283
29	4.5	250	314	296	192	316	281	118	87	316	142	283
30	14	215	313	293	------	316	281	125	85	316	140	307
31	178	------	312	299	------	316	------	126	------	317	140	------
TOTAL	5,116.0	5,379	7,712	9,359	6,693	9,114	8,022	7,456	2,841	7,613	5,621	8,639
MEAN	165	179	249	302	231	294	267	241	94.7	246	181	288
MAX	245	272	322	315	300	316	318	316	122	328	318	322
MIN	4.5	28	194	212	192	196	170	118	82	80	133	135
AC-FT	10,150	10,670	15,300	18,560	13,280	18,080	15,910	14,790	5,640	15,100	11,150	17,140

CAL YR 1971 TOTAL 80,679.0 MEAN 221 MAX 324 MIN 4.5 AC-FT 160,000
WTR YR 1972 TOTAL 83,565.0 MEAN 228 MAX 328 MIN 4.5 AC-FT 165,800

11471500 EEL RIVER AT VAN ARSDALE DAM, NEAR POTTER VALLEY, CALIF.

LOCATION.--Lat 39°23'19", long 123°06'54", in NE¼ sec.30, T.18 N., R.11 W., Mendocino County, on left bank 1,000 ft downstream from Van Arsdale Dam, and 4.6 miles north of town of Potter Valley.

DRAINAGE AREA.--349 sq mi.

PERIOD OF RECORD.--November 1909 to September 1922 (combined monthly discharge only, of Eel River at this station and Snow Mountain Water and Power Co.'s tailrace near Potter Valley), October 1922 to current year. Monthly discharge only for some periods, published in WSP 1315-B. Prior to October 1929, published as South Eel River at Van Arsdale Dam, near Potter Valley.

GAGE.--Water-stage recorder. Altitude of gage is 1,400 ft (from topographic map). Nov. 18, 1909, to Mar. 3, 1927, recorder in reservoir 800 ft upstream from Van Arsdale Dam at different datum. Oct. 1, 1927, to Feb. 28, 1937, nonrecording gage at present site and datum.

AVERAGE DISCHARGE (combined flow of Eel River at Van Arsdale Dam and Potter Valley powerhouse tailrace).--63 years (1909-72), 634 cfs (459,300 acre-ft per year).

EXTREMES.--Current year: Maximum discharge, 4,340 cfs Feb. 29 (gage height, 12.51 ft); minimum daily, 0.97 cfs Oct. 31, Nov. 2.
Period of record: Maximum discharge, 64,100 cfs Dec. 22, 1964 (gage height, 33.9 ft from floodmarks); no flow at times.

REMARKS.--Flow regulated by Lake Pillsbury 11 miles upstream (see sta 11470000). Water is diverted from Van Arsdale Reservoir through tunnel to Potter Valley powerhouse (see sta 11471000) after which part is used for irrigation and remainder flows into East Fork Russian River. Records given herein show only flow passing dam down Eel River. Records of chemical analyses for the current year are published in Part 2 of this report.

COOPERATION.--Records collected by Pacific Gas and Electric Co., under general supervision of the Geological Survey, in connection with a Federal Power Commission project.

REVISIONS (WATER YEARS).--WSP 1315-B: 1913, 1920-23, 1925-27. WSP 1395: 1923(M), 1938.

DISCHARGE, IN CUBIC FEET PER SECOND, WATER YEAR OCTOBER 1971 TO SEPTEMBER 1972

DAY	OCT	NOV	DEC	JAN	FEB	MAR	APR	MAY	JUN	JUL	AUG	SEP
1	4.0	1.1	15	18	214	2,590	45	8.0	5.0	2.0	3.0	3.3
2	3.9	.97	31	24	159	2,300	45	6.0	4.0	2.0	3.0	3.3
3	3.7	8.2	35	25	169	2,740	60	4.0	3.0	2.0	3.0	3.3
4	3.3	18	20	18	617	2,430	30	2.0	3.0	2.0	3.0	3.3
5	3.3	18	20	3.3	1,150	1,970	70	2.0	2.5	2.0	3.0	3.3
6	6.0	18	30	1.8	1,090	1,590	50	2.0	2.5	2.0	3.0	3.3
7	4.9	18	20	1.9	875	1,340	35	5.0	2.5	2.0	3.0	3.3
8	7.0	18	23	14	683	1,190	30	10	2.0	2.0	3.0	3.2
9	1.0	15	15	1.3	532	1,170	25	8.0	2.0	2.0	3.0	3.1
10	1.0	3.0	20	1.8	427	1,040	16	10	2.0	2.0	3.0	3.0
11	3.9	2.9	5.6	1.5	361	689	36	12	2.0	2.0	3.0	3.1
12	3.5	8.2	54	1.6	316	130	800	14	2.0	2.2	3.0	3.2
13	1.4	91	6.0	12	288	109	950	14	2.0	2.4	3.0	3.2
14	1.4	70	1.5	1.9	265	108	550	14	2.0	2.5	3.0	3.2
15	9.9	60	14	1.5	240	99	530	30	2.0	2.5	3.0	3.2
16	5.4	27	7.9	1.7	226	91	510	10	2.0	2.5	3.0	3.2
17	5.6	38	2.7	2.0	204	100	505	5.0	2.0	2.5	3.0	3.1
18	5.6	32	2.5	4.5	178	110	370	5.0	2.0	3.0	3.0	2.9
19	4.0	8.2	2.5	32	162	105	210	5.0	2.0	3.0	3.0	2.9
20	32	7.6	2.5	61	206	100	200	5.0	2.0	3.0	3.0	2.9
21	5.6	6.8	9.9	176	234	110	200	5.0	2.0	3.0	3.0	3.0
22	4.7	6.2	389	658	537	280	175	5.0	2.0	3.0	3.0	3.2
23	7.6	3.6	108	964	1,510	100	135	11	2.0	3.0	3.0	3.7
24	19	1.5	113	992	2,620	130	235	16	2.0	3.0	3.0	4.2
25	4.7	1.3	29	1,430	2,130	140	215	30	2.0	3.0	3.0	4.4
26	16	20	9.5	1,100	2,490	90	120	15	2.0	3.0	3.0	3.9
27	17	24	35	841	2,290	65	100	25	2.0	3.0	3.0	3.1
28	17	25	5.2	554	2,380	30	65	17	2.0	3.0	3.0	2.2
29	27	59	11	377	3,840	40	75	13	2.0	3.0	3.0	2.1
30	13	49	11	302	------	45	25	8.0	2.0	3.0	3.0	2.9
31	.97	------	4.7	252	------	45	------	5.0	------	3.0	3.0	------
TOTAL	243.37	659.57	1,053.5	7,874.8	26,393	21,076	6,412	321.0	68.5	78.6	93.0	96.0
MEAN	7.85	22.0	34.0	254	910	680	214	10.4	2.28	2.54	3.00	3.20
MAX	32	91	389	1,430	3,840	2,740	950	30	5.0	3.0	3.0	4.4
MIN	.97	.97	1.5	1.3	159	30	16	2.0	2.0	2.0	3.0	2.1
AC-FT	483	1,310	2,090	15,620	52,350	41,800	12,720	637	136	156	184	190

CAL YR 1971 TOTAL 150,680.84 MEAN 413 MAX 17,600 MIN .97 AC-FT 298,900
WTR YR 1972 TOTAL 64,369.34 MEAN 176 MAX 3,840 MIN .97 AC-FT 127,700

NOTE.--No gage-height record Mar. 17 to Sept. 6.

11472150 EEL RIVER NEAR DOS RIOS, CALIF.

LOCATION.--Lat 39°37'30", long 123°20'25", in SW¼SW¼ sec.32, T.21 N., R.13 W., Mendocino County, on left bank 1,100 ft upstream from Outlet Creek, and 6.3 miles south of Dos Rios.

DRAINAGE AREA.--528 sq mi.

PERIOD OF RECORD.--October 1966 to current year.

GAGE.--Water-stage recorder. Datum of gage is 1,001.28 ft above mean sea level.

AVERAGE DISCHARGE.--6 years, 1,035 cfs (749,900 acre-ft per year).

EXTREMES.--Current year: Maximum discharge, 12,300 cfs Jan. 23 (gage height, 13.23 ft); minimum daily, 2.7 cfs Sept. 15-17.

Period of record: Maximum discharge, 61,600 cfs Jan. 23, 1970 (gage height, 30.35 ft), from rating curve extended above 14,000 cfs; minimum daily, 1.8 cfs Oct. 7, 8, 1970.

Flood of Dec. 22, 1964, reached a stage of 45.52 ft, from information by local resident (discharge, 120,000 cfs).

REMARKS.--Records good. Flow partly regulated by Lake Pillsbury 40 miles upstream (see sta 11470000) and by diversion through Potter Valley powerhouse (see sta 11471000). Records of chemical analyses, water temperatures, and suspended-sediment discharge for the current year are published in Part 2 of this report.

DISCHARGE, IN CUBIC FEET PER SECOND, WATER YEAR OCTOBER 1971 TO SEPTEMBER 1972

DAY	OCT	NOV	DEC	JAN	FEB	MAR	APR	MAY	JUN	JUL	AUG	SEP
1	25	25	55	185	612	4,120	300	169	46	16	6.3	3.5
2	18	18	125	177	492	3,540	286	133	42	16	5.1	3.1
3	11	14	335	177	423	4,200	264	110	41	14	5.7	3.1
4	9.0	12	268	145	1,250	3,620	273	105	40	14	5.1	3.1
5	8.4	11	122	131	1,920	2,920	402	99	39	14	5.1	3.1
6	7.9	18	747	116	1,780	2,370	721	93	37	14	4.5	3.1
7	7.3	25	406	107	1,440	1,970	559	91	36	12	5.1	3.1
8	6.8	25	181	99	1,160	1,730	427	93	36	12	4.5	3.1
9	6.8	27	286	102	935	1,550	374	173	40	11	4.5	3.5
10	7.9	31	350	87	781	1,530	300	93	44	9.5	4.5	3.5
11	8.4	34	350	82	650	1,410	572	83	43	9.5	4.5	3.5
12	6.8	37	1,270	79	558	708	1,980	74	40	9.5	4.5	3.5
13	5.7	99	879	77	486	520	2,630	71	37	8.5	4.5	3.5
14	5.3	177	395	79	450	432	1,470	71	36	8.5	4.5	3.1
15	4.9	97	310	75	395	366	1,250	69	34	7.5	4.5	2.7
16	5.3	87	204	70	360	352	1,120	96	32	6.9	5.7	2.7
17	5.7	53	155	68	335	322	1,020	74	31	6.9	9.5	2.7
18	6.0	53	134	68	291	304	953	69	31	6.3	9.5	3.5
19	8.2	49	119	92	259	291	585	64	29	5.7	8.5	3.5
20	11	36	104	237	291	269	471	96	28	5.7	8.5	3.5
21	19	25	99	2,520	335	252	412	110	28	6.3	7.5	3.5
22	34	24	2,330	5,460	1,620	812	388	91	26	6.9	6.9	4.0
23	22	22	1,470	7,010	3,480	741	335	74	25	6.9	6.3	4.0
24	18	21	1,550	2,760	5,030	526	383	80	25	7.5	5.1	4.0
25	16	22	1,330	2,660	4,510	832	454	83	25	7.5	4.5	4.0
26	28	131	689	2,090	5,500	552	313	91	25	6.9	4.0	20
27	18	145	612	1,660	4,130	448	245	76	23	6.9	4.0	188
28	19	259	406	1,260	4,420	397	211	69	22	6.9	4.0	55
29	24	315	291	963	5,990	361	226	64	19	6.3	4.0	29
30	27	119	242	823	------	339	214	55	16	6.3	3.5	23
31	33	------	208	708	------	322	------	51	------	6.3	3.1	------
TOTAL	433.4	2,011	16,022	30,167	49,883	38,106	19,138	2,770	976	282.2	167.5	398.9
MEAN	14.0	67.0	517	973	1,720	1,229	638	89.4	32.5	9.10	5.40	13.3
MAX	34	315	2,330	7,010	5,990	4,200	2,630	173	46	16	9.5	188
MIN	4.9	11	55	68	259	252	211	51	16	5.7	3.1	2.7
AC-FT	860	3,990	31,780	59,840	98,940	75,580	37,960	5,490	1,940	560	332	791

CAL YR 1971 TOTAL 308,779.1 MEAN 846 MAX 36,300 MIN 4.9 AC-FT 612,500
WTR YR 1972 TOTAL 160,355.0 MEAN 438 MAX 7,010 MIN 2.7 AC-FT 318,100

11472200 OUTLET CREEK NEAR LONGVALE, CALIF.

LOCATION.--Lat 39°37'05", long 123°21'20", in NE¼ sec.1, T.20 N., R.14 W., Mendocino County, on right bank 0.2 mile downstream from Bloody Run Creek, 0.9 mile upstream from mouth, and 6.9 miles northeast of Longvale.

DRAINAGE AREA.--161 sq mi.

PERIOD OF RECORD.--October 1956 to current year.

GAGE.--Water-stage recorder. Datum of gage is 1,018.14 ft above mean sea level.

AVERAGE DISCHARGE.--16 years, 435 cfs (315,200 acre-ft per year).

EXTREMES.--Current year: Maximum discharge, 12,000 cfs Jan. 22 (gage height, 13.38 ft); minimum daily, 1.0 cfs Sept. 3.
Period of record: Maximum discharge, 77,900 cfs Dec. 22, 1964 (gage height, 30.6 ft, from floodmarks), from rating curve extended above 9,900 cfs on basis of slope-area measurement of maximum flow; no flow Aug. 15-17, 1959, Sept. 14, 15, 1967.

REMARKS.--Records good. No regulation or diversion above station.

REVISIONS (WATER YEARS).--WSP 1929: 1958(M), 1960.

DISCHARGE, IN CUBIC FEET PER SECOND, WATER YEAR OCTOBER 1971 TO SEPTEMBER 1972

DAY	OCT	NOV	DEC	JAN	FEB	MAR	APR	MAY	JUN	JUL	AUG	SEP
1	5.5	4.3	142	187	403	1,530	171	80	21	4.0	2.0	1.2
2	3.9	4.3	402	160	339	1,580	159	74	20	3.6	1.7	1.1
3	3.5	4.7	526	142	315	1,990	145	69	20	3.5	1.8	1.0
4	3.1	4.7	466	122	765	1,330	130	65	19	3.3	1.8	1.1
5	3.1	4.3	394	106	780	859	171	60	17	3.2	1.8	1.1
6	3.1	4.3	780	99	570	625	388	57	17	3.1	1.8	1.1
7	3.1	4.3	366	91	444	498	343	57	15	2.9	1.7	1.1
8	3.1	4.3	211	84	371	410	241	66	14	2.8	1.5	1.1
9	3.1	4.3	458	78	315	344	198	64	16	2.7	1.3	1.1
10	2.8	5.1	526	71	272	389	167	57	19	2.6	1.2	1.1
11	2.8	7.5	470	68	247	470	537	53	20	2.6	1.1	1.1
12	2.8	13	1,310	66	216	373	1,350	48	19	2.5	1.1	1.1
13	2.8	139	880	63	186	315	1,130	43	16	2.4	1.1	1.1
14	2.8	95	553	59	165	261	666	39	14	2.3	1.1	1.1
15	2.8	46	410	54	158	225	447	37	12	2.3	1.2	1.1
16	2.8	25	269	51	148	198	342	35	11	2.0	1.6	1.1
17	2.8	17	201	50	143	175	273	36	10	2.0	2.7	1.1
18	2.8	13	163	49	130	155	229	39	9.9	2.0	2.9	1.1
19	3.1	11	133	72	118	139	197	38	9.3	1.8	2.3	1.1
20	4.7	9.8	112	323	219	128	172	41	8.5	1.9	2.2	1.1
21	5.9	8.8	114	2,660	183	120	152	50	7.8	2.1	2.1	1.2
22	5.1	7.9	1,620	5,720	1,680	660	137	51	6.9	2.2	2.0	1.3
23	5.5	7.5	1,110	5,720	2,290	629	128	46	6.8	2.2	1.9	1.3
24	5.9	7.5	1,310	2,320	3,040	633	201	41	6.8	2.2	1.8	1.3
25	5.5	7.5	1,010	1,540	3,400	772	176	37	6.8	2.4	1.7	1.4
26	5.1	334	685	1,070	3,360	504	144	33	6.8	2.5	1.7	7.7
27	4.7	233	695	778	1,840	371	120	31	6.6	2.3	1.6	106
28	4.3	522	495	650	2,770	294	104	29	5.5	2.3	1.4	40
29	4.3	482	359	534	2,470	247	92	26	4.8	2.2	1.4	22
30	4.3	273	280	480	------	215	86	24	4.9	2.1	1.3	13
31	4.3	------	227	440	------	189	------	22	------	2.1	1.2	------
TOTAL	119.4	2,304.1	16,677	23,907	27,337	16,628	8,796	1,448	371.4	78.1	52.0	217.2
MEAN	3.85	76.8	538	771	943	536	293	46.7	12.4	2.52	1.68	7.24
MAX	5.9	522	1,620	5,720	3,400	1,990	1,350	80	21	4.0	2.9	106
MIN	2.8	4.3	112	49	118	120	86	22	4.8	1.8	1.1	1.0
AC-FT	237	4,570	33,080	47,420	54,220	32,980	17,450	2,870	737	155	103	431

CAL YR 1971 TOTAL 128,534.8 MEAN 352 MAX 13,100 MIN 1.3 AC-FT 254,900
WTR YR 1972 TOTAL 97,935.2 MEAN 268 MAX 5,720 MIN 1.0 AC-FT 194,300

PEAK DISCHARGE (BASE, 7,000 CFS).--Jan. 22 (2100) 12,000 cfs (13.38 ft).

11472900 BLACK BUTTE RIVER NEAR COVELO, CALIF.

LOCATION.--Lat 39°49'15", long 123°04'50", in SE¼ sec.28, T.23 N., R.11 W., Mendocino County, on right bank 10 ft upstream from highway bridge, 0.5 mile upstream from mouth, and 9.5 miles east of Covelo.

DRAINAGE AREA.--162 sq mi.

PERIOD OF RECORD.--Occasional low-flow measurements, water years 1951-56, and annual maximum, water years 1954-57, October 1958 to current year.

GAGE.--Water-stage recorder. Datum of gage is 1,456.71 ft above mean sea level. Sept. 10, 1953, to Sept. 30, 1957, crest-stage gage only at same site at different datum. Oct. 1, 1958, to Dec. 22, 1964, water-stage recorder at site 0.1 mile upstream at same datum.

AVERAGE DISCHARGE.--14 years, 307 cfs (222,400 acre-ft per year).

EXTREMES.--Current year: Maximum discharge, 6,980 cfs Jan. 22 (gage height, 19.57 ft); minimum daily, 3.3 cfs Sept. 12, 13, 16-19.

Period of record: Maximum discharge, 29,000 cfs Dec. 22, 1964 (gage height, 26.4 ft, from floodmarks, site then in use), from rating curve extended above 13,000 cfs on basis of slope-area measurement of maximum flow; minimum (1958 to current year), 1.2 cfs Sept. 11, 1959.

Flood of Dec. 11, 1937, reached a stage of 36.2 ft, from floodmarks at crest-stage site (discharge, 26,000 cfs).

REMARKS.--Records poor. No regulation or diversion above station. Records of water temperatures and suspended-sediment discharge for the current year are published in Part 2 of this report.

REVISIONS (WATER YEARS).--WSP 1715: 1959(M).

DISCHARGE, IN CUBIC FEET PER SECOND, WATER YEAR OCTOBER 1971 TO SEPTEMBER 1972

DAY	OCT	NOV	DEC	JAN	FEB	MAR	APR	MAY	JUN	JUL	AUG	SEP
1	16	8.5	55	102	268	855	254	222	89	12	8.0	6.7
2	11	8.8	57	108	235	1,360	264	218	83	11	7.6	6.7
3	9.5	8.5	58	108	232	2,360	254	215	79	10	7.3	6.6
4	8.5	8.5	44	94	349	1,380	241	215	72	9.7	7.3	6.6
5	7.8	8.5	56	88	367	1,100	389	211	61	9.5	7.3	6.8
6	7.4	8.1	376	87	334	936	501	206	58	9.3	7.3	6.6
7	7.1	7.8	124	94	289	830	436	201	54	9.0	7.1	7.4
8	6.7	7.4	84	88	265	745	373	199	52	8.8	7.1	5.0
9	6.4	7.8	170	84	241	630	329	190	53	8.6	7.1	4.2
10	6.0	9.5	124	82	238	589	306	183	58	8.2	7.1	3.7
11	5.7	20	80	77	223	575	376	174	55	7.7	7.1	3.4
12	5.7	57	90	76	218	568	467	169	51	7.4	6.7	3.3
13	5.7	66	64	80	213	568	433	167	47	7.2	6.7	3.3
14	5.4	51	71	84	218	534	405	165	42	7.0	7.1	3.6
15	5.4	28	74	80	220	513	415	158	40	6.8	7.1	3.6
16	5.7	23	44	84	226	510	405	158	36	6.8	8.8	3.3
17	6.0	19	50	85	205	513	373	160	32	7.3	11	3.3
18	6.4	17	61	122	188	483	345	151	27	7.7	11	3.3
19	6.7	16	55	271	188	405	316	149	25	8.5	10	3.3
20	8.8	15	48	538	274	329	301	172	23	8.5	10	3.6
21	8.8	17	38	968	274	287	289	174	22	9.5	10	3.6
22	8.8	17	590	2,180	346	444	280	160	21	12	9.8	3.6
23	8.5	17	296	1,780	629	423	273	146	19	12	9.6	3.6
24	8.5	18	310	679	837	554	277	137	19	10	9.5	3.6
25	8.5	22	229	548	603	674	266	131	18	9.5	9.5	3.6
26	8.5	94	148	419	882	480	257	125	17	9.1	9.2	23
27	8.5	138	118	379	761	410	247	117	16	8.8	8.5	109
28	8.5	157	102	352	1,690	366	245	111	14	8.5	8.1	51
29	8.1	134	92	319	1,320	308	234	105	13	8.5	7.8	20
30	7.8	87	84	286	------	284	224	101	12	8.8	7.8	13
31	8.1	------	85	268	------	268	------	97	------	8.5	7.4	------
TOTAL	240.5	1,096.4	3,877	10,610	12,333	20,281	9,775	5,087	1,208	276.2	255.9	328.3
MEAN	7.76	36.5	125	342	425	654	326	164	40.3	8.91	8.25	10.9
MAX	16	157	590	2,180	1,690	2,360	501	222	89	12	11	109
MIN	5.4	7.4	38	76	188	268	224	97	12	6.8	6.7	3.3
AC-FT	477	2,170	7,690	21,040	24,460	40,230	19,390	10,090	2,400	548	508	651

CAL YR 1971 TOTAL 92,784.6 MEAN 254 MAX 5,170 MIN 4.5 AC-FT 184,000
WTR YR 1972 TOTAL 65,368.3 MEAN 179 MAX 2,360 MIN 3.3 AC-FT 129,700

PEAK DISCHARGE (BASE, 5,500 CFS).--Jan. 22 (time unknown) 6,980 cfs (19.57 ft).

NOTE.--No gage-height record Jan. 21-26.

11473800 ELK CREEK NEAR HEARST, CALIF.

LOCATION.--Lat 39°38'50", long 123°07'13", in NE¼SE¼ sec.30, T.21 N., R.11 W., Mendocino County, on left bank 900 ft upstream from small left-bank tributary, and 13.5 miles northeast of Hearst.

DRAINAGE AREA.--84.1 sq mi.

PERIOD OF RECORD.--July 1964 to current year.

GAGE.--Water-stage recorder. Datum of gage is 1,197.2 ft above mean sea level (levels by Topographic Division). Prior to Nov. 6, 1969, at site 600 ft downstream at same datum.

AVERAGE DISCHARGE.--8 years, 213 cfs (154,300 acre-ft per year).

EXTREMES.--Current year: Maximum discharge, 2,970 cfs Jan. 23 (gage height, 16.08 ft); minimum daily, 0.73 cfs Sept. 9-12, 16-20, 23.
Period of record: Maximum discharge, 25,000 cfs Dec. 22, 1964 (gage height, 22.2 ft, present site, from floodmarks), from rating curve extended above 9,900 cfs on basis of slope-area measurement at gage height 22.2 ft, present site; minimum daily, 0.10 cfs Sept. 24 to Oct. 11, 1964.

REMARKS.--Records good. No regulation or diversion above station. Records of water temperatures and suspended-sediment discharge for the current year are published in Part 2 of this report.

DISCHARGE, IN CUBIC FEET PER SECOND, WATER YEAR OCTOBER 1971 TO SEPTEMBER 1972

DAY	OCT	NOV	DEC	JAN	FEB	MAR	APR	MAY	JUN	JUL	AUG	SEP
1	5.9	4.2	31	96	125	727	138	110	35	6.1	2.1	.81
2	5.1	4.3	43	102	119	670	138	104	35	5.1	2.1	.81
3	4.6	4.0	45	110	117	815	134	104	33	4.7	1.9	.81
4	4.1	3.8	36	102	243	685	132	102	31	4.4	1.7	.81
5	3.5	4.2	27	89	270	580	290	100	28	3.9	1.7	.81
6	3.2	4.0	122	81	234	480	337	98	27	3.7	1.5	.81
7	3.1	3.6	62	81	177	383	251	96	25	3.6	1.4	.81
8	2.9	3.6	43	73	145	337	220	96	22	3.5	1.3	.81
9	2.9	4.0	60	56	133	318	200	92	24	3.4	1.2	.73
10	2.9	5.5	62	45	133	308	183	84	26	3.4	1.2	.73
11	2.8	23	50	44	123	308	257	81	24	3.2	1.2	.73
12	2.8	29	96	73	112	272	361	80	22	3.1	1.1	.73
13	2.7	75	65	85	112	254	294	75	21	2.8	1.1	.81
14	2.8	36	53	68	119	228	254	73	20	2.7	1.1	.81
15	2.8	17	56	61	110	210	245	68	19	2.4	1.1	.81
16	3.1	12	44	76	112	210	236	70	17	2.2	1.7	.73
17	3.0	10	40	76	108	200	213	70	16	2.1	2.1	.73
18	3.1	8.9	45	96	104	188	195	64	15	1.9	1.8	.73
19	3.3	8.0	45	234	104	166	180	67	13	1.7	1.7	.73
20	3.4	7.1	43	365	133	152	168	86	13	1.7	1.5	.73
21	3.1	6.8	51	554	123	143	156	80	12	1.7	1.5	.89
22	3.1	6.8	986	1,070	400	315	150	73	11	1.7	1.4	.81
23	3.5	7.0	475	1,660	626	236	144	67	10	1.7	1.4	.73
24	3.9	6.9	608	572	662	215	162	62	11	1.4	1.4	.89
25	3.9	6.9	380	400	566	266	144	57	11	1.4	1.4	.97
26	3.9	22	255	252	500	215	136	51	10	2.7	1.3	3.9
27	3.8	54	210	210	440	193	130	48	9.0	1.8	1.1	80
28	3.8	59	159	186	799	176	126	46	8.0	1.7	.97	28
29	3.7	74	135	156	1,140	166	118	41	7.2	1.8	.97	12
30	3.9	49	110	143	------	154	114	40	6.8	1.8	.97	7.5
31	4.0	------	94	135	------	146	------	37	------	1.7	.89	------
TOTAL	108.5	559.6	4,531	7,351	8,089	9,716	5,806	2,322	562.0	85.0	43.80	151.17
MEAN	3.50	18.7	146	237	279	313	194	74.9	18.7	2.74	1.41	5.04
MAX	5.8	75	986	1,660	1,140	815	361	110	35	6.1	2.1	80
MIN	2.7	3.6	27	44	104	143	114	37	6.8	1.4	.89	.73
AC-FT	215	1,110	8,990	14,580	16,040	19,270	11,520	4,610	1,110	169	87	300

CAL YR 1971 TOTAL 64,808.50 MEAN 178 MAX 6,680 MIN 2.7 AC-FT 128,500
WTR YR 1972 TOTAL 39,325.07 MEAN 107 MAX 1,660 MIN .73 AC-FT 78,000

PEAK DISCHARGE (BASE, 4,000 CFS).--No peak above base.

11473900 MIDDLE FORK EEL RIVER NEAR DOS RIOS, CALIF.

LOCATION.--Lat 39°42'23", long 123°19'27", in NE¼SE¼ sec.5, T.21 N., R.13 W., Mendocino County, on right bank 0.6 mile upstream from Eastman Creek, 1.7 miles southeast of Dos Rios, and 1.9 miles upstream from mouth.

DRAINAGE AREA.--745 sq mi.

PERIOD OF RECORD.--October 1965 to current year.

GAGE.--Water-stage recorder. Datum of gage is 901.58 ft above mean sea level.

AVERAGE DISCHARGE.--7 years, 1,795 cfs (1,300,000 acre-ft per year).

EXTREMES.--Current year: Maximum discharge, 33,000 cfs Jan. 23 (gage height, 19.66 ft); minimum daily, 12 cfs Sept. 17-25.
Period of record: Maximum discharge, 90,500 cfs Jan. 23, 1970 (gage height, 27.15 ft); minimum daily, 5.8 cfs Sept. 14-16, 1970.

REMARKS.--Records good. No regulation or diversion above station. Records of water temperatures and suspended-sediment discharge for the current year are published in Part 2 of this report.

REVISIONS (WATER YEARS).--WRD Calif. 1967: 1966.

DISCHARGE, IN CUBIC FEET PER SECOND, WATER YEAR OCTOBER 1971 TO SEPTEMBER 1972

DAY	OCT	NOV	DEC	JAN	FEB	MAR	APR	MAY	JUN	JUL	AUG	SEP
1	68	32	513	656	1,220	6,090	1,510	898	337	99	35	15
2	55	34	450	707	1,040	7,110	1,580	890	314	92	35	14
3	44	34	457	761	980	13,400	1,570	914	301	85	34	14
4	38	34	408	648	2,260	8,140	1,450	874	281	81	37	14
5	37	32	326	576	2,830	6,030	2,160	914	273	75	28	16
6	34	32	2,800	544	2,220	4,580	3,740	866	265	71	26	15
7	34	31	1,340	560	1,900	3,850	3,020	858	253	67	26	20
8	31	31	680	552	1,650	3,400	2,360	866	245	63	24	18
9	30	31	950	506	1,510	3,180	1,930	770	245	60	23	17
10	28	32	1,140	492	1,380	3,450	1,650	730	265	58	22	15
11	27	53	716	478	1,290	3,860	2,030	738	245	55	21	14
12	27	218	815	457	1,220	3,610	3,360	716	229	53	20	14
13	25	341	689	568	1,170	3,670	3,100	695	214	48	19	14
14	24	311	492	536	1,170	3,340	2,460	702	203	45	18	14
15	23	146	584	478	1,190	2,860	2,410	709	196	41	18	13
16	23	105	385	485	1,180	2,890	2,400	688	203	36	20	13
17	24	85	336	485	1,140	2,860	2,080	702	186	38	22	12
18	24	78	390	600	1,090	2,680	1,790	639	177	45	24	12
19	25	71	414	1,290	1,060	2,220	1,580	618	170	48	24	12
20	29	66	396	3,340	1,520	1,870	1,430	667	161	50	23	12
21	31	76	358	6,710	1,690	1,630	1,350	702	153	38	23	12
22	31	88	4,780	11,900	3,280	2,880	1,290	688	142	37	24	12
23	32	78	3,720	18,700	5,760	3,040	1,200	611	134	35	22	12
24	32	73	3,250	5,810	8,220	2,830	1,310	569	131	41	21	12
25	32	88	2,620	3,900	5,520	5,320	1,200	520	126	45	20	12
26	32	232	1,700	2,990	8,380	3,360	1,050	508	122	42	20	24
27	31	2,140	1,310	2,410	6,510	2,720	1,010	490	115	39	18	548
28	31	1,580	960	1,950	10,100	2,250	1,010	490	113	38	18	293
29	31	1,450	797	1,600	12,800	1,960	938	478	110	38	17	164
30	30	920	672	1,490	------	1,760	882	454	103	38	17	113
31	31	------	592	1,370	------	1,620	------	380	------	34	16	------
TOTAL	994	8,522	35,040	73,549	91,280	118,460	54,850	21,344	6,012	1,635	715	1,490
MEAN	32.1	284	1,130	2,373	3,148	3,821	1,828	689	200	52.7	23.1	49.7
MAX	68	2,140	4,780	18,700	12,800	13,400	3,740	914	337	99	37	548
MIN	23	31	326	457	980	1,620	882	380	103	34	16	12
AC-FT	1,970	16,900	69,500	145,900	181,100	235,000	108,800	42,340	11,920	3,240	1,420	2,960

CAL YR 1971 TOTAL 604,974 MEAN 1,657 MAX 43,300 MIN 13 AC-FT 1,200,000
WTR YR 1972 TOTAL 413,891 MEAN 1,131 MAX 18,700 MIN 12 AC-FT 821,000

PEAK DISCHARGE (BASE, 35,000 CFS).--No peak above base.

11474500 NORTH FORK EEL RIVER NEAR MINA, CALIF.

LOCATION.--Lat 39°56'18", long 123°20'36", in SW¼ sec.8, T.24 N., R.13 W., Mendocino County, on right bank 0.2 mile upstream from county road bridge, 1.4 miles upstream from Asbill Creek, and 2 miles south of Mina.

DRAINAGE AREA.--248 sq mi.

PERIOD OF RECORD.--August 1953 to current year.

GAGE.--Water-stage recorder. Datum of gage is 1,016.8 ft above mean sea level (levels by Topographic Division). Aug. 27, 1953, to Jan. 15, 1954, water-stage recorder and Jan. 16 to June 22, 1954, nonrecording gage, at site 0.4 mile downstream at different datums. June 23, 1954, to Dec. 21, 1964, water-stage recorder and Feb. 7 to July 8, 1965, nonrecording gage at site 0.2 mile downstream at different datums. July 9, 1965, to Aug. 20, 1967, water-stage recorder at site 0.6 mile downstream at datum 15.1 ft lower.

AVERAGE DISCHARGE.--19 years, 630 cfs (456,400 acre-ft per year); median of yearly mean discharges, 530 cfs (384,000 acre-feet per year).

EXTREMES.--Current year: Maximum discharge, 15,300 cfs Jan. 22 (gage height, 15.57 ft); minimum daily, 1.2 cfs Sept. 8-10.
Period of record: Maximum discharge, 133,000 cfs Dec. 22, 1964 (gage height, 33.6 ft, from floodmarks, site and datum then in use), from rating curve extended above 12,000 cfs on basis of slope-area measurement of maximum flow; minimum, 0.1 cfs Aug. 30, 31, 1959.

REMARKS.--Records good. No regulation or diversion above station.

DISCHARGE, IN CUBIC FEET PER SECOND, WATER YEAR OCTOBER 1971 TO SEPTEMBER 1972

DAY	OCT	NOV	DEC	JAN	FEB	MAR	APR	MAY	JUN	JUL	AUG	SEP
1	42	9.2	260	320	543	2,380	396	173	51	18	4.0	4.0
2	23	11	287	343	461	4,650	373	160	48	17	4.0	3.2
3	16	11	359	334	433	7,080	335	151	47	15	3.2	3.2
4	12	11	318	262	1,320	2,910	308	143	45	14	3.2	2.4
5	11	10	411	235	1,950	2,080	458	137	41	14	3.2	2.4
6	9.0	10	2,050	217	1,480	1,590	629	129	40	13	2.4	2.4
7	8.0	10	636	207	1,040	1,180	585	127	38	12	2.4	1.8
8	6.4	10	375	188	800	912	492	139	37	12	2.4	1.2
9	5.6	10	797	163	660	785	432	123	43	11	2.4	1.2
10	4.8	11	646	151	566	795	380	115	63	11	2.4	1.2
11	4.8	26	501	142	508	1,010	680	109	50	11	3.2	1.8
12	4.0	88	637	140	459	870	1,390	101	43	11	3.2	1.8
13	4.0	427	499	152	418	835	1,390	95	39	10	2.4	1.8
14	3.2	208	573	146	402	715	956	91	37	9.0	2.4	2.4
15	3.2	97	620	137	390	614	774	87	34	8.0	2.4	2.4
16	3.2	64	434	134	358	538	636	87	33	7.2	3.2	1.8
17	4.0	47	410	132	334	506	532	101	32	6.4	3.2	1.8
18	4.0	40	469	166	315	452	464	87	32	6.4	4.0	1.8
19	4.0	33	443	295	303	403	414	81	31	5.6	4.0	3.2
20	5.6	31	382	545	464	364	370	89	28	5.6	4.8	3.2
21	12	29	489	2,410	398	335	337	119	27	5.6	6.4	3.2
22	16	27	3,920	5,650	1,420	942	310	101	26	5.6	4.8	3.2
23	13	23	2,070	7,780	3,380	895	288	85	23	4.8	4.8	3.2
24	12	23	1,990	2,630	4,820	1,440	341	77	22	4.8	4.8	2.4
25	14	35	1,540	1,800	3,100	2,350	317	72	22	4.8	4.0	2.4
26	13	317	839	1,250	5,400	1,300	263	68	22	4.8	4.0	11
27	11	646	592	958	3,050	899	236	65	22	5.6	4.8	51
28	10	885	437	728	4,760	691	215	60	21	5.6	4.8	45
29	9.7	966	367	628	4,420	572	198	57	20	4.8	4.8	29
30	9.0	498	323	602	------	491	185	56	19	4.8	4.0	20
31	9.0	------	294	600	------	437	------	53	------	4.8	3.2	------
TOTAL	306.5	4,613.2	23,968	29,445	43,952	41,021	14,684	3,138	1,036	273.2	112.8	215.4
MEAN	9.89	154	773	950	1,516	1,323	489	101	34.5	8.81	3.64	7.18
MAX	42	966	3,920	7,780	5,400	7,080	1,390	173	63	18	6.4	51
MIN	3.2	9.2	260	132	303	335	185	53	19	4.8	2.4	1.2
AC-FT	608	9,150	47,540	58,400	87,180	81,370	29,130	6,220	2,050	542	224	427

CAL YR 1971 TOTAL 189,125.7 MEAN 518 MAX 18,000 MIN 1.2 AC-FT 375,100
WTR YR 1972 TOTAL 162,765.1 MEAN 445 MAX 7,780 MIN 1.2 AC-FT 322,800

PEAK DISCHARGE (BASE, 8,000 CFS)

DATE	TIME	G.H.	DISCHARGE	DATE	TIME	G.H.	DISCHARGE
1-22	2400	15.57	15,300	3-3	0230	13.91	11,400
2-28	2145	12.06	8,110				

11475000 EEL RIVER AT FORT SEWARD, CALIF.

LOCATION.--Lat 40°13'05", long 123°37'54", in SE¼NE¼ sec.8, T.3 S., R.5 E., Humboldt County, on right bank at downstream side of bridge, 1.0 mile southeast of Fort Seward, 1.9 miles upstream from Dobbyn Creek, and 11.8 miles northeast of Garberville.

DRAINAGE AREA.--2,107 sq mi.

PERIOD OF RECORD.--September 1955 to current year. Prior to October 1965, published as "at Alderpoint."

GAGE.--Water-stage recorder. Datum of gage is 217.26 ft above mean sea level. Prior to Dec. 22, 1964, at site 7.5 miles upstream at datum 46.55 ft higher. Feb. 2 to Sept. 30, 1965, at site 7.7 miles upstream at datum 49.42 ft higher.

AVERAGE DISCHARGE.--17 years, 4,779 cfs (3,462,000 acre-ft per year).

EXTREMES.--Current year: Maximum discharge, 66,800 cfs Jan. 23 (gage height, 28.55 ft); minimum daily, 26 cfs Sept. 7-9, 23.
Period of record: Maximum discharge, 561,000 cfs Dec. 22, 1964 (gage height, 87.2 ft, from floodmarks, site and datum then in use), from rating curve extended above 110,000 cfs on basis of slope-area measurement at gage height 72.5 ft; minimum daily, 10 cfs Aug. 30 to Sept. 5, 1964.

REMARKS.--Records good. Flow slightly regulated by Lake Pillsbury 99 miles upstream (see sta 11470000) and by diversion through Potter Valley powerhouse (see sta 11471000). Records of chemical analyses, water temperatures, suspended-sediment discharge, and sediment and turbidity data for the current year are published in Part 2 of this report.

DISCHARGE, IN CUBIC FEET PER SECOND, WATER YEAR OCTOBER 1971 TO SEPTEMBER 1972

DAY	OCT	NOV	DEC	JAN	FEB	MAR	APR	MAY	JUN	JUL	AUG	SEP
1	142	99	1,980	1,850	4,300	21,500	3,070	1,690	586	143	52	32
2	149	116	1,980	1,880	3,660	20,800	2,890	1,590	554	138	51	32
3	145	128	2,780	1,860	3,250	33,200	2,970	1,530	522	130	48	32
4	124	120	2,670	1,720	6,130	24,200	2,780	1,480	494	123	48	31
5	117	105	2,220	1,490	9,940	18,200	2,800	1,460	454	120	48	29
6	101	95	7,030	1,360	8,500	14,500	5,380	1,430	427	115	48	28
7	92	84	5,450	1,280	6,760	11,800	5,440	1,380	399	110	47	26
8	89	84	2,700	1,240	5,580	9,900	4,490	1,360	374	106	44	26
9	86	101	2,410	1,170	4,770	8,650	3,900	1,310	374	103	42	26
10	83	132	4,210	1,080	4,080	8,380	3,340	1,270	406	99	39	27
11	75	155	3,590	990	3,550	8,880	3,600	1,140	454	95	38	30
12	75	232	5,140	960	3,160	7,850	8,730	1,080	413	92	36	31
13	73	1,280	6,040	960	2,910	6,900	10,900	1,030	371	91	36	29
14	70	1,750	3,640	978	2,790	6,360	7,530	1,020	342	89	35	29
15	68	1,080	3,630	948	2,740	5,340	6,060	1,030	315	88	34	28
16	66	665	2,670	924	2,550	4,930	5,420	996	294	85	36	28
17	63	499	2,050	912	2,420	4,760	4,850	1,030	276	80	38	28
18	61	390	1,950	924	2,280	4,420	4,300	978	267	74	37	28
19	58	330	1,940	1,310	2,170	3,940	3,790	888	257	70	41	28
20	66	293	1,760	3,380	2,620	3,380	3,200	870	244	67	45	27
21	66	270	1,590	11,400	3,320	3,030	2,890	984	226	64	47	27
22	74	239	11,800	24,500	6,040	4,050	2,700	1,070	209	63	48	27
23	108	235	13,300	52,200	18,600	7,430	2,540	936	196	61	47	26
24	126	251	10,100	22,200	27,000	5,800	2,770	835	187	61	44	27
25	136	244	10,600	15,500	21,000	10,900	2,820	805	183	61	43	27
26	122	728	6,080	12,500	30,200	7,450	2,490	775	183	61	41	47
27	113	4,100	4,390	8,900	21,900	5,620	2,190	745	176	59	41	98
28	103	3,950	3,520	7,450	23,300	4,680	2,020	715	170	59	39	1,110
29	105	5,630	2,710	5,980	35,500	4,110	1,920	695	161	58	37	630
30	101	3,570	2,310	5,170	------	3,650	1,810	665	150	58	35	399
31	98	------	1,980	4,770	------	3,310	------	625	------	55	32	------
TOTAL	2,955	26,955	134,220	197,786	271,020	287,920	119,590	33,412	9,664	2,678	1,297	2,993
MEAN	95.3	899	4,330	6,380	9,346	9,288	3,986	1,078	322	86.4	41.8	99.8
MAX	149	5,630	13,300	52,200	35,500	33,200	10,900	1,690	586	143	52	1,110
MIN	58	84	1,590	912	2,170	3,030	1,810	625	150	55	32	26
AC-FT	5,860	53,470	266,200	392,300	537,600	571,100	237,200	66,270	19,170	5,310	2,570	5,940

CAL YR 1971 TOTAL 1,540,341 MEAN 4,220 MAX 122,000 MIN 37 AC-FT 3,055,000
WTR YR 1972 TOTAL 1,090,490 MEAN 2,979 MAX 52,200 MIN 26 AC-FT 2,163,000

PEAK DISCHARGE (BASE, 41,000 CFS).--Jan. 23 (0715) 66,800 cfs (28.55 ft); Feb. 29 (0615) 41,600 cfs (23.46 ft).

11475560 ELDER CREEK NEAR BRANSCOMB, CALIF.
(Hydrologic bench-mark station)

LOCATION.--Lat 39°43'47", long 123°38'34", in NW¼NE¼ sec.29, T.22 N., R.16 W., Mendocino County, on right bank 0.2 mile upstream from mouth, and 5.3 miles north of Branscomb.
Rain gage No. 1: Lat 39°43'50", long 123°38'07", in NW¼NW¼ sec.28, T.22 N., R.16 W., altitude, 1,440 ft at site 0.5 mile east of gaging station.
Rain gage No. 2: Lat 39°42'36", long 123°37'03", in NW¼SW¼ sec.34, T.22 N., R.16 W., altitude, 2,680 ft at site 2 miles southeast of gaging station.

DRAINAGE AREA.--6.50 sq mi.

PERIOD OF RECORD.--October 1967 to current year.

GAGE.--Water-stage recorder and two recording and storage-type precipitation gages. Datum of gage is 1,391.08 ft above mean sea level.

AVERAGE DISCHARGE.--5 years, 29.1 cfs (21,080 acre-ft per year).

EXTREMES.--Current year: Maximum discharge, 728 cfs Jan. 22 (gage height, 7.22 ft); minimum daily, 0.80 cfs Sept. 3, 12, 15, 16.
Period of record: Maximum discharge, 1,320 cfs Dec. 3, 1970 (gage height, 8.45 ft); minimum daily, 0.50 cfs Sept. 28-30, Oct. 4-17, 1970.
Flood of Dec. 22, 1964, reached a stage of 11.41 ft, from floodmarks (discharge, 3,660 cfs, by slope-area measurement of maximum flow).

REMARKS.--Records good. No regulation; small diversion above station for domestic use. Records of chemical analyses, water temperatures, and suspended-sediment discharges for the current year are published in Part 2 of this report.

DISCHARGE, IN CUBIC FEET PER SECOND, WATER YEAR OCTOBER 1971 TO SEPTEMBER 1972

DAY	OCT	NOV	DEC	JAN	FEB	MAR	APR	MAY	JUN	JUL	AUG	SEP
1	2.2	1.7	13	20	31	175	23	11	5.5	3.3	1.7	.88
2	1.7	1.7	16	20	28	138	21	10	5.4	3.2	1.6	.84
3	1.7	1.7	18	20	27	153	20	10	5.2	3.2	1.6	.80
4	1.5	1.7	18	18	31	130	19	9.4	5.1	3.0	1.6	.83
5	1.5	1.7	19	18	39	91	20	9.1	5.0	3.0	1.5	.84
6	1.5	1.6	42	16	42	68	21	8.9	4.9	2.9	1.5	.92
7	1.4	1.6	26	15	41	55	20	9.4	4.9	2.9	1.4	1.0
8	1.4	1.6	20	14	37	46	19	9.8	5.0	2.9	1.4	.96
9	1.4	1.7	24	14	35	41	18	9.2	5.8	2.9	1.4	.89
10	1.3	1.8	23	13	31	37	17	8.8	5.4	2.9	1.3	.82
11	1.3	2.7	21	12	28	39	22	8.4	5.2	2.7	1.2	.82
12	1.3	5.1	37	12	26	34	49	8.2	5.0	2.7	1.1	.80
13	1.3	18	32	11	24	32	57	7.9	4.8	2.7	1.1	.84
14	1.3	7.0	27	11	23	30	49	7.6	4.6	2.6	1.1	.84
15	1.3	4.4	24	10	21	28	41	7.4	4.6	2.6	1.2	.80
16	1.3	3.6	21	9.8	20	26	35	7.3	4.4	2.4	1.3	.80
17	1.3	3.1	19	9.3	18	24	30	7.7	4.4	2.2	1.5	.84
18	1.3	2.8	18	9.0	18	22	27	7.3	4.3	2.2	1.8	.84
19	1.4	2.5	17	10	18	21	25	6.9	4.3	2.4	1.6	.84
20	1.7	2.4	16	15	20	20	23	7.2	4.1	2.3	1.4	.86
21	1.7	2.2	16	127	18	18	21	7.2	4.0	2.2	1.4	.92
22	1.7	2.2	52	361	36	32	19	7.0	3.8	2.2	1.3	.96
23	1.8	2.1	58	430	93	32	18	6.8	3.8	2.2	1.2	.92
24	1.7	2.4	68	203	185	36	18	6.6	3.8	2.2	1.1	.92
25	1.6	2.5	68	128	183	45	16	6.4	3.8	2.1	1.1	1.0
26	1.5	17	49	85	265	43	15	6.2	3.8	2.0	1.1	4.0
27	1.5	14	36	65	200	39	14	6.1	3.6	1.9	1.0	5.8
28	1.5	19	29	52	210	34	13	6.0	3.6	1.9	.97	3.5
29	1.5	26	25	44	248	31	12	5.8	3.6	1.8	.94	2.6
30	1.6	18	22	38	------	27	12	5.7	3.5	1.8	.91	2.0
31	1.7	------	21	34	------	25	------	5.6	------	1.7	.88	------
TOTAL	46.9	173.8	895	1,844.1	1,996	1,572	714	240.9	135.2	77.0	40.20	39.68
MEAN	1.51	5.79	28.9	59.5	68.8	50.7	23.8	7.77	4.51	2.48	1.30	1.32
MAX	2.2	26	68	430	265	175	57	11	5.8	3.3	1.8	5.8
MIN	1.3	1.6	13	9.0	18	18	12	5.6	3.5	1.7	.88	.80
AC-FT	93	345	1,780	3,660	3,960	3,120	1,420	478	268	153	80	79
(a)	-	-	13.02	13.01	13.00	6.75	4.98	.14	.21	1.09	.53	.04
(b)	1.52	12.77	12.78	15.93	16.32	8.62	6.48	1.36	.89	0	.79	3.82

CAL YR 1971 TOTAL 9,218.64 MEAN 25.3 MAX 488 MIN .89 AC-FT 18,290
WTR YR 1972 TOTAL 7,774.78 MEAN 21.2 MAX 430 MIN .80 AC-FT 15,420

PEAK DISCHARGE (BASE, 200 CFS).--Jan. 22 (2400) 728 cfs (7.22 ft); Feb. 28 (1915) 283 cfs (5.81 ft).

a Precipitation, in inches, at rain gage No. 1.
b Precipitation, in inches, at rain gage No. 2.
NOTE.--No gage-height record Apr. 27 to June 7, July 19 to Sept. 22.

11475700 TENMILE CREEK NEAR LAYTONVILLE, CALIF.

LOCATION.--Lat 39°45'45", long 123°32'30", in NW¼ sec.16, T.22 N., R.15 W., Mendocino County, on right bank 0.1 mile downstream from Step Gulch Creek, and 6.0 miles northwest of Laytonville.

DRAINAGE AREA.--50.3 sq mi.

PERIOD OF RECORD.--October 1957 to current year.

GAGE.--Water-stage recorder. Datum of gage is 1,427.42 ft above mean sea level.

AVERAGE DISCHARGE.--15 years, 157 cfs (113,700 acre-ft per year).

EXTREMES.--Current year: Maximum discharge, 4,680 cfs Jan. 22 (gage height, 11.75 ft); minimum daily, 0.65 cfs Aug. 13.

Period of record: Maximum discharge, 14,500 cfs Dec. 22, 1964 (gage height, 21.3 ft, from floodmarks), from rating curve extended above 4,300 cfs on basis of slope-area measurement at gage height 22.9 ft; no flow at times.

Flood of Dec. 22, 1955, reached a stage of 22.9 ft, from floodmarks (discharge, 16,300 cfs by slope-area measurement of maximum flow).

REMARKS.--Records good. No regulation or diversion above station.

DISCHARGE, IN CUBIC FEET PER SECOND, WATER YEAR OCTOBER 1971 TO SEPTEMBER 1972

DAY	OCT	NOV	DEC	JAN	FEB	MAR	APR	MAY	JUN	JUL	AUG	SEP
1	4.7	3.5	45	75	138	578	152	53	11	4.9	1.9	1.1
2	3.7	3.7	198	69	114	686	140	48	11	4.7	1.8	.98
3	3.4	3.5	196	63	130	798	130	46	11	4.7	1.7	.98
4	2.9	3.5	120	57	420	474	121	44	9.8	4.7	1.8	3.1
5	2.6	3.4	126	53	402	350	135	40	8.8	4.7	1.8	4.5
6	2.3	3.4	278	50	263	270	158	38	8.2	4.5	1.3	2.0
7	2.5	3.4	99	48	196	217	138	40	7.7	4.2	1.4	1.6
8	2.3	3.2	66	45	162	175	122	42	7.4	4.2	1.3	1.2
9	2.1	3.8	155	42	137	165	113	36	14	4.0	.98	1.1
10	2.0	4.7	172	40	117	228	106	33	15	3.8	.80	.92
11	1.9	8.5	128	38	100	254	210	30	14	3.7	.75	.80
12	1.9	26	582	37	90	178	420	28	13	3.7	.70	.80
13	1.9	115	240	36	80	160	370	26	11	3.4	.65	.86
14	1.8	37	172	34	75	148	300	24	11	3.1	.75	1.2
15	1.7	16	124	33	70	130	250	22	10	2.8	1.9	1.3
16	1.8	11	86	32	63	126	200	22	9.5	2.3	2.6	1.1
17	2.0	8.5	68	31	59	116	164	24	8.8	2.2	10	1.1
18	2.5	7.4	59	30	55	97	140	21	8.5	2.2	5.8	1.1
19	2.6	6.3	50	54	60	90	118	21	7.1	2.5	4.0	1.2
20	4.7	5.8	45	140	131	85	102	24	5.8	2.9	3.7	1.4
21	4.2	5.3	59	1,050	93	82	92	23	7.1	3.2	3.4	1.4
22	3.7	5.1	810	2,100	698	178	84	21	7.1	3.4	3.1	1.6
23	5.1	4.9	486	1,650	1,080	178	78	19	6.8	3.4	2.8	1.7
24	4.5	5.8	682	582	1,300	275	84	19	7.1	2.8	2.5	1.7
25	3.2	6.0	384	550	1,180	430	95	18	7.1	2.9	2.2	2.3
26	3.7	177	254	375	1,400	400	82	16	6.0	2.8	2.0	9.4
27	3.4	172	199	295	694	300	73	15	6.0	2.8	1.8	20
28	3.1	343	140	226	1,330	242	66	13	5.8	2.3	1.7	8.0
29	3.1	264	119	191	915	210	61	12	5.3	2.2	1.5	4.7
30	3.4	78	98	172	------	186	56	12	5.3	2.2	1.4	3.8
31	3.7	------	86	159	------	177	------	12	------	2.1	1.3	------
TOTAL	92.4	1,338.7	6,326	8,357	11,552	7,983	4,360	842	266.2	103.3	69.33	82.94
MEAN	2.98	44.6	204	270	398	258	145	27.2	8.87	3.33	2.24	2.76
MAX	5.1	343	810	2,100	1,400	798	420	53	15	4.9	10	20
MIN	1.7	3.2	45	30	55	82	56	12	5.3	2.1	.65	.80
AC-FT	183	2,660	12,550	16,580	22,910	15,830	8,650	1,670	528	205	138	165

CAL YR 1971 TOTAL 46,998.33 MEAN 129 MAX 3,900 MIN .52 AC-FT 93,220
WTR YR 1972 TOTAL 41,372.87 MEAN 113 MAX 2,100 MIN .65 AC-FT 82,060

PEAK DISCHARGE (BASE, 5,000 CFS).--No peak above base.

NOTE.--No gage-height record Mar. 14 to Apr. 25.

11475800 SOUTH FORK EEL RIVER AT LEGGETT, CALIF.

LOCATION.--Lat 39°52'30", long 123°43'10", in NE¼SE¼ sec.3, T.23 N., R.17 W., Mendocino County, on right bank near Standish-Hickey State Park, 0.2 mile upstream from Rock Creek, and 0.5 mile northwest of Leggett.

DRAINAGE AREA.--248 sq mi.

PERIOD OF RECORD.--October 1965 to current year.

GAGE.--Water-stage recorder. Datum of gage is 693.32 ft above mean sea level.

AVERAGE DISCHARGE.--7 years, 923 cfs (668,700 acre-ft per year).

EXTREMES.--Current year: Maximum discharge, 31,500 cfs Jan. 22 (gage height, 18.51 ft); minimum daily, 19 cfs Sept. 12, 15, 16.

Period of record: Maximum discharge, 72,700 cfs Jan. 4, 1966 (gage height, 25.4 ft, from floodmarks), from rating curve extended above 21,000 cfs on basis of slope-area measurement at gage height 26.13 ft; minimum daily, 15 cfs Oct. 15, 1966, Sept. 30 to Oct. 17, 1970.

Flood of Dec. 22, 1964, reached a stage of 26.13 ft, from floodmarks (discharge, 78,700 cfs by slope-area measurement of maximum flow).

REMARKS.--Records good. No regulation or diversion above station. Records of water temperatures for the current year are published in Part 2 of this report.

DISCHARGE, IN CUBIC FEET PER SECOND, WATER YEAR OCTOBER 1971 TO SEPTEMBER 1972

DAY	OCT	NOV	DEC	JAN	FEB	MAR	APR	MAY	JUN	JUL	AUG	SEP
1	81	31	515	580	1,120	4,090	705	390	123	62	34	24
2	56	31	683	520	1,040	3,860	666	370	118	60	33	22
3	45	30	832	485	994	5,040	635	354	115	60	33	21
4	42	29	787	406	1,370	3,390	605	338	110	60	33	22
5	37	29	565	350	1,520	2,510	625	326	108	60	31	22
6	34	29	1,500	326	1,360	1,980	820	310	103	58	31	24
7	33	28	916	306	1,210	1,640	738	318	101	54	30	25
8	31	28	570	282	1,100	1,420	677	326	99	53	29	24
9	31	29	738	262	1,010	1,270	635	298	120	53	29	21
10	29	34	862	243	940	1,300	600	274	135	54	28	20
11	25	48	868	229	862	1,390	793	258	115	53	26	20
12	25	182	1,450	222	804	1,210	1,830	243	105	53	25	19
13	25	591	1,810	215	754	1,120	1,740	229	99	51	25	20
14	25	366	1,110	203	721	1,020	1,350	219	97	48	25	20
15	25	197	850	194	688	952	1,070	206	93	46	26	19
16	25	121	610	185	650	886	946	200	89	45	34	19
17	25	89	565	179	625	826	832	212	89	42	40	20
18	26	74	540	173	600	776	754	197	87	43	45	20
19	26	64	515	200	590	738	699	191	83	48	40	20
20	30	58	485	374	782	710	625	197	80	45	37	20
21	31	55	455	5,160	688	683	615	197	76	45	36	21
22	33	49	922	13,800	1,540	1,260	575	185	76	45	34	22
23	36	48	2,450	16,400	3,040	1,280	545	176	74	45	33	24
24	37	59	1,710	4,610	5,700	1,450	672	167	74	45	31	21
25	37	69	1,500	3,280	4,730	1,910	620	158	74	43	30	24
26	36	709	1,300	2,450	9,630	1,480	545	150	72	42	29	56
27	31	760	1,100	1,970	5,050	1,210	495	145	71	39	28	140
28	29	1,150	980	1,590	7,000	1,050	455	138	67	39	26	120
29	29	1,460	820	1,390	7,080	916	433	130	67	37	26	91
30	28	677	720	1,270	------	820	410	128	65	37	25	64
31	29	------	650	1,190	------	754	------	125	------	36	24	------
TOTAL	1,032	7,124	29,378	59,044	63,198	48,941	22,710	7,155	2,785	1,501	956	1,005
MEAN	33.3	237	948	1,905	2,179	1,579	757	231	92.8	48.4	30.8	33.5
MAX	81	1,460	2,450	16,400	9,630	5,040	1,830	390	135	62	45	140
MIN	25	28	455	173	590	683	410	125	65	36	24	19
AC-FT	2,050	14,130	58,270	117,100	125,400	97,070	45,050	14,190	5,520	2,980	1,900	1,990

CAL YR 1971 TOTAL 284,310 MEAN 779 MAX 23,900 MIN 22 AC-FT 563,900
WTR YR 1972 TOTAL 244,829 MEAN 669 MAX 16,400 MIN 19 AC-FT 485,600

PEAK DISCHARGE (BASE, 8,500 CFS)

DATE	TIME	G.H.	DISCHARGE	DATE	TIME	G.H.	DISCHARGE
1-22	2330	18.51	31,500	2-28	2100	12.60	12,100
2-26	0745	12.18	11,100				

11475940 EAST BRANCH SOUTH FORK EEL RIVER NEAR GARBERVILLE, CALIF.

LOCATION.--Lat 40°04'27", long 123°46'08", in SE¼NE¼ sec.31, T.4 S., R.4 E., Humboldt County, on left bank just upstream from Panther Canyon, 1.9 miles upstream from mouth, and 2.3 miles southeast of Garberville.

DRAINAGE AREA.--74.3 sq mi.

PERIOD OF RECORD.--June 1966 to September 1972 (discontinued).

GAGE.--Water-stage recorder. Datum of gage is 385.32 ft above mean sea level.

AVERAGE DISCHARGE.--6 years, 279 cfs (202,100 acre-ft per year).

EXTREMES.--Current year: Maximum discharge, 14,200 cfs Jan. 22 (gage height, 13.86 ft, from high-water mark); minimum daily, 3.2 cfs Oct. 28, 29.
Period of record: Maximum discharge, 21,000 cfs Dec. 21, 1969 (gage height, 14.40 ft), from rating curve extended above 5,600 cfs; minimum daily, 2.2 cfs Oct. 19, 1970.

REMARKS.--Records poor. No regulation; small diversion above station for irrigation.

DISCHARGE, IN CUBIC FEET PER SECOND, WATER YEAR OCTOBER 1971 TO SEPTEMBER 1972

DAY	OCT	NOV	DEC	JAN	FEB	MAR	APR	MAY	JUN	JUL	AUG	SEP
1	3.8	3.4	613	164	245	1,280	170	70	24	11	6.6	4.7
2	3.9	3.4	939	140	236	1,230	156	68	24	11	6.4	4.4
3	4.1	3.4	890	122	239	1,540	140	65	23	11	6.3	4.2
4	4.3	3.6	771	113	517	913	126	62	22	10	6.1	4.2
5	4.4	3.6	787	107	565	642	142	60	21	10	5.9	4.3
6	4.6	3.4	1,080	98	414	470	179	57	20	9.9	5.6	4.9
7	4.5	3.4	736	90	334	362	160	57	20	9.6	5.4	6.0
8	4.7	3.4	638	86	287	290	148	58	19	9.6	5.3	5.4
9	4.5	4.0	729	82	257	248	130	54	23	9.4	5.2	4.7
10	4.4	11	761	78	218	290	118	51	37	9.2	5.1	4.2
11	4.4	52	733	74	182	362	203	48	30	9.0	5.0	4.1
12	4.4	210	1,380	70	146	266	1,200	46	27	8.9	4.8	3.8
13	4.6	58	585	68	128	239	800	45	23	8.8	4.7	4.1
14	4.3	40	465	63	120	221	587	43	21	8.5	4.6	4.6
15	3.8	31	366	60	108	206	470	42	19	8.2	5.4	3.9
16	3.8	25	203	58	98	197	374	41	18	7.9	6.9	3.8
17	3.6	22	134	56	90	182	298	43	17	8.0	10	3.7
18	3.6	21	132	55	84	173	254	41	16	8.6	15	3.8
19	3.8	19	93	66	95	163	206	40	15	9.6	13	3.9
20	3.8	18	87	163	209	156	151	41	15	11	11	4.0
21	3.6	16	92	4,500	144	148	128	45	14	9.5	10	4.2
22	3.6	18	840	5,500	1,270	490	116	42	14	9.1	8.8	4.5
23	3.8	21	580	2,000	2,750	330	122	38	14	8.8	8.0	5.0
24	3.6	28	460	1,150	2,640	672	191	35	13	8.8	7.3	4.2
25	3.4	120	400	720	2,140	624	120	33	13	8.4	6.8	9.7
26	3.6	500	340	580	2,610	398	100	31	12	8.0	6.4	36
27	3.4	782	290	500	1,530	330	92	30	12	7.6	6.0	30
28	3.2	917	250	430	3,040	266	86	28	11	7.3	5.7	15
29	3.2	984	225	350	2,210	230	80	27	11	7.2	5.4	10
30	3.4	721	202	310	------	206	76	26	11	7.2	5.1	8.4
31	3.4	------	190	270	------	188	------	25	------	6.9	4.9	------
TOTAL	121.5	4,645.6	15,991	18,123	22,906	13,312	7,123	1,392	559	278.0	212.7	213.7
MEAN	3.92	155	516	585	790	429	237	44.9	18.6	8.97	6.86	7.12
MAX	4.7	984	1,380	5,500	3,040	1,540	1,200	70	37	11	15	36
MIN	3.2	3.4	87	55	84	148	76	25	11	6.9	4.6	3.7
AC-FT	241	9,210	31,720	35,950	45,430	26,400	14,130	2,760	1,110	551	422	424

CAL YR 1971 TOTAL 83,750.4 MEAN 229 MAX 4,900 MIN 3.2 AC-FT 166,100
WTR YR 1972 TOTAL 84,877.5 MEAN 232 MAX 5,500 MIN 3.2 AC-FT 168,400

PEAK DISCHARGE (BASE, 5,000 CFS).--Jan. 22 (time unknown) 14,200 cfs (13.86 ft); Feb. 28 (1845) 5,970 cfs (11.32 ft).

NOTE.--No gage-height record Dec. 22 to Jan. 11, May 17 to Sept. 30.

11476500 SOUTH FORK EEL RIVER NEAR MIRANDA, CALIF.

LOCATION.--Lat 40°10'55", long 123°46'30", in NW¼ sec.30, T.3 S., R.4 E., Humboldt County, on right bank at Sylvandale Campgrounds on U.S. Highway 101, 0.5 mile upstream from Rocky Glen Creek, 4.3 miles southeast of Miranda, and 20 miles upstream from mouth.

DRAINAGE AREA.--537 sq mi.

PERIOD OF RECORD.--October 1939 to current year. Monthly discharge only for some periods, published in WSP 1315-B.

GAGE.--Water-stage recorder. Datum of gage is 217.57 ft above mean sea level. Prior to Nov. 2, 1940, nonrecording gage at site 200 ft upstream at datum 0.8 ft higher. Nov. 2, 1940, to Oct. 31, 1944, nonrecording gage at present site and datum.

AVERAGE DISCHARGE.--33 years, 1,898 cfs (1,375,000 acre-ft per year).

EXTREMES.--Current year: Maximum discharge, 66,500 cfs Jan. 23 (gage height, 24.26 ft); minimum daily, 44 cfs Sept. 22, 24.

Period of record: Maximum discharge, 199,000 cfs Dec. 22, 1964 (gage height, 46.0 ft, from floodmarks), from rating curve extended above 53,000 cfs on basis of slope-area measurement at gage height 42.7 ft; minimum observed, 9 cfs Oct. 17, 1944.

REMARKS.--Records good. Occasional storage and release for recreation use during summer months at Benbow Dam. No diversion above station. Records of chemical analyses and water temperatures for the current year are published in Part 2 of this report.

REVISIONS.--WSP 1395: Drainage area. WRD Calif. 1971: 1955.

DISCHARGE, IN CUBIC FEET PER SECOND, WATER YEAR OCTOBER 1971 TO SEPTEMBER 1972

DAY	OCT	NOV	DEC	JAN	FEB	MAR	APR	MAY	JUN	JUL	AUG	SEP
1	185	74	1,120	1,160	2,720	10,800	1,400	712	272	148	75	54
2	149	74	1,450	1,040	2,380	8,580	1,300	685	264	143	73	54
3	116	74	2,130	938	1,900	11,000	1,200	657	260	106	70	54
4	96	74	2,380	846	2,870	8,110	1,130	630	252	116	70	54
5	86	70	1,460	767	3,920	5,880	1,220	608	237	128	68	52
6	83	70	2,510	715	3,550	4,450	1,630	586	237	125	68	52
7	74	67	2,030	676	3,040	3,550	1,630	575	228	125	66	50
8	70	67	1,310	638	2,630	2,910	1,430	608	219	123	65	50
9	67	89	1,260	602	2,250	2,550	1,270	575	256	118	63	50
10	64	190	1,910	568	1,810	2,490	1,170	535	296	116	62	49
11	62	176	1,950	543	1,680	3,000	1,400	512	296	111	60	49
12	60	333	3,760	530	1,500	2,580	4,680	490	248	111	58	49
13	59	1,920	3,940	523	1,520	2,420	4,820	467	228	108	55	47
14	60	1,390	2,240	498	1,450	2,180	3,290	449	216	104	55	47
15	60	610	2,030	475	1,400	1,960	2,630	432	207	102	55	88
16	59	388	1,480	456	1,320	1,760	2,170	424	201	102	60	133
17	59	285	1,200	442	1,310	1,600	1,820	436	192	98	75	88
18	59	230	1,060	430	1,590	1,440	1,580	428	186	95	82	52
19	59	190	904	452	1,690	1,320	1,390	408	183	91	81	47
20	90	171	793	666	1,500	1,230	1,250	412	178	85	81	47
21	96	162	723	7,950	3,200	1,170	1,150	420	173	88	79	46
22	93	149	4,350	24,500	6,400	2,070	1,060	392	170	90	73	44
23	90	140	4,980	44,700	10,300	3,020	1,010	280	168	90	68	46
24	100	145	5,560	14,600	13,800	2,970	1,300	316	165	90	66	44
25	100	205	5,720	10,400	11,500	4,700	1,170	312	163	88	63	46
26	96	847	3,770	7,790	24,400	3,440	990	304	160	86	62	96
27	86	2,690	2,880	6,050	14,600	2,770	901	316	160	84	62	458
28	80	2,120	2,180	4,830	16,900	2,370	838	312	155	81	60	396
29	80	3,000	1,770	4,040	21,000	2,030	784	300	153	81	57	222
30	74	2,000	1,490	3,500	------	1,760	745	284	150	79	55	150
31	74	------	1,290	3,070	------	1,560	------	280	------	73	54	------
TOTAL	2,586	18,000	71,630	144,395	164,130	107,670	48,358	14,145	6,273	3,185	2,041	2,714
MEAN	83.4	600	2,311	4,658	5,660	3,473	1,612	456	209	103	65.8	90.5
MAX	185	3,000	5,720	44,700	24,400	11,000	4,820	712	296	148	82	458
MIN	59	67	723	430	1,310	1,170	745	280	150	73	54	44
AC-FT	5,130	35,700	142,100	286,400	325,600	213,600	95,920	28,060	12,440	6,320	4,050	5,380

CAL YR 1971 TOTAL 650,724 MEAN 1,783 MAX 61,000 MIN 42 AC-FT 1,291,000
WTR YR 1972 TOTAL 585,127 MEAN 1,599 MAX 44,700 MIN 44 AC-FT 1,161,000

PEAK DISCHARGE (BASE, 15,000 CFS)

DATE	TIME	G.H.	DISCHARGE	DATE	TIME	G.H.	DISCHARGE
1-23	0200	24.26	66,500	2-29	0230	15.75	27,700
2-26	0715	15.73	27,600				

11476600 BULL CREEK NEAR WEOTT, CALIF.

LOCATION.--Lat 40°21'05", long 124°00'10", in SW¼NW¼ sec.30, T.1 S., R.2 E., Humboldt County, on left bank 0.2 mile downstream from Albee Creek, 4.5 miles northwest of Weott, and 4.6 miles upstream from mouth.

DRAINAGE AREA.--28.1 sq mi.

PERIOD OF RECORD.--October 1960 to current year.

GAGE.--Water-stage recorder. Datum of gage is 269.36 ft above mean sea level. Prior to Dec. 22, 1964, water-stage recorder, and Jan. 14 to Aug. 10, 1965, nonrecording gage at site 150 ft downstream at datum 8.90 ft lower.

AVERAGE DISCHARGE.--12 years, 124 cfs (89,840 acre-ft per year).

EXTREMES.--Current year: Maximum discharge, 4,000 cfs Jan. 22 (gage height, unknown); minimum daily, 1.7 cfs Sept. 22-25.
Period of record: Maximum discharge, 6,520 cfs Dec. 22, 1964 (gage height, 20.6 ft, from floodmarks, site and datum then in use), from rating curve extended above 2,100 cfs on basis of slope-area measurement of maximum flow; minimum daily, 0.82 cfs Oct. 1-6, 1970.

REMARKS.--Records good. Minor diversions above station for domestic use.

DISCHARGE, IN CUBIC FEET PER SECOND, WATER YEAR OCTOBER 1971 TO SEPTEMBER 1972

DAY	OCT	NOV	DEC	JAN	FEB	MAR	APR	MAY	JUN	JUL	AUG	SEP
1	5.8	3.4	196	145	165	450	98	55	19	9.7	4.4	2.5
2	4.4	3.3	240	132	153	450	91	53	18	10	4.4	2.4
3	4.1	3.2	226	122	146	540	84	50	18	10	4.4	2.4
4	3.7	3.1	205	118	160	300	80	48	17	9.7	4.2	2.3
5	3.5	2.9	205	98	164	250	132	47	17	9.4	4.2	2.3
6	3.5	2.9	235	102	151	210	130	44	17	9.4	4.4	2.3
7	3.1	3.0	203	98	146	185	121	46	16	9.1	4.1	2.3
8	3.0	3.0	182	95	138	170	118	46	16	8.8	3.5	2.1
9	3.0	139	203	92	131	160	109	40	19	8.8	3.7	2.0
10	2.8	214	209	88	128	208	103	39	23	8.8	3.9	2.0
11	2.8	140	203	85	123	250	104	36	19	8.4	3.3	2.0
12	2.8	221	346	85	118	195	217	34	17	8.4	3.3	2.0
13	2.7	334	297	82	115	176	183	32	15	9.4	3.1	1.8
14	2.5	203	271	79	111	161	165	31	14	7.5	3.1	1.8
15	2.7	142	242	76	108	148	153	29	15	7.5	3.9	1.8
16	2.7	109	211	75	105	137	139	31	14	6.7	4.4	1.8
17	2.7	91	185	74	103	126	127	31	15	6.7	5.3	2.0
18	2.7	78	165	73	100	115	117	28	13	6.7	3.9	1.8
19	6.3	68	150	75	110	106	108	27	13	6.7	3.9	1.8
20	9.0	61	140	130	140	99	99	28	13	6.7	3.1	1.8
21	5.1	55	135	490	120	95	92	29	12	6.7	3.1	1.8
22	4.4	51	330	1,800	250	138	85	27	12	6.7	3.1	1.7
23	4.9	47	380	1,900	290	111	95	24	12	6.7	3.3	1.7
24	4.4	52	540	580	375	164	104	24	12	6.7	3.1	1.7
25	3.9	45	450	520	350	171	88	22	11	5.8	2.8	1.7
26	3.7	188	350	370	760	153	78	21	11	5.8	3.0	21
27	3.7	171	260	370	560	142	73	21	11	5.8	2.7	13
28	3.6	248	215	250	740	132	69	20	10	5.0	2.7	6.1
29	3.4	310	235	210	880	120	63	19	10	5.3	2.7	4.6
30	3.5	245	178	180	------	112	59	19	10	5.3	2.4	4.1
31	3.7	------	160	160	------	105	------	19	------	5.0	2.3	------
TOTAL	118.1	3,236.8	7,547	8,754	6,940	5,879	3,284	1,020	439	233.2	109.7	98.6
MEAN	3.81	108	243	282	239	190	109	32.9	14.6	7.52	3.54	3.29
MAX	9.0	334	540	1,900	880	540	217	55	23	10	5.3	21
MIN	2.5	2.9	135	73	100	95	59	19	10	5.0	2.3	1.7
AC-FT	234	6,420	14,970	17,360	13,770	11,660	6,510	2,020	871	463	218	196

CAL YR 1971 TOTAL 36,853.9 MEAN 101 MAX 1,850 MIN 2.0 AC-FT 73,100
WTR YR 1972 TOTAL 37,659.4 MEAN 103 MAX 1,900 MIN 1.7 AC-FT 74,700

PEAK DISCHARGE (BASE, 1,700 CFS).--Jan. 24 (time unknown) 4,000 cfs.

NOTE.--No gage-height record Dec. 17 to Feb. 1, Feb. 10 to Mar. 12.

11477000 EEL RIVER AT SCOTIA, CALIF.
(International Hydrological Decade River Station)

LOCATION.--Lat 40°29'30", long 124°05'55", in SW¼ sec.5, T.1 N., R.1 E., Humboldt County, near center of span in left pier of bridge on U.S. Highway 101, 0.5 mile north of Scotia, and 6 miles upstream from Van Duzen River.

DRAINAGE AREA.--3,113 sq mi.

PERIOD OF RECORD.--October 1910 to current year. Monthly discharge only for some periods and yearly estimates for 1915-16, published in WSP 1315-B.

GAGE.--Water-stage recorder. Datum of gage is 35.50 ft above mean sea level. Prior to Dec. 12, 1940, nonrecording gage at same site and datum.

AVERAGE DISCHARGE.--62 years, 7,240 cfs (5,245,000 acre-ft per year).

EXTREMES.--Current year: Maximum discharge, 133,000 cfs Jan. 23 (gage height, 31.77 ft); minimum daily, 88 cfs Sept. 23-25.
Period of record: Maximum discharge, 752,000 cfs Dec. 23, 1964 (gage height, 72.0 ft, from floodmarks), from rating curve extended above 220,000 cfs on basis of maximum flow at upstream stations; minimum observed, 10 cfs Aug. 12-14, 1924.

REMARKS.--Records good. Flow slightly regulated by Lake Pillsbury 138 miles upstream (see sta 11470000) and by diversion through Potter Valley powerhouse (see sta 11471000). Records of chemical analyses, water temperatures, and suspended-sediment discharge for the current year are published in Part 2 of this report.

REVISIONS (WATER YEARS).--WSP 931: 1938. WSP 1315-B: 1914-15(M), 1917(M), 1927-28(M), 1936(M), 1939(M). WSP 1345: Drainage area. WSP 1715: 1959.

DISCHARGE, IN CUBIC FEET PER SECOND, WATER YEAR OCTOBER 1971 TO SEPTEMBER 1972

DAY	OCT	NOV	DEC	JAN	FEB	MAR	APR	MAY	JUN	JUL	AUG	SEP
1	290	214	5,130	4,350	9,220	44,100	5,980	3,230	1,200	398	186	104
2	270	219	4,880	4,110	8,140	36,600	5,410	3,030	1,120	382	174	101
3	257	219	6,530	3,910	7,420	61,200	5,260	2,850	1,040	366	168	101
4	243	221	6,580	3,670	8,590	50,000	4,990	2,740	982	350	162	101
5	233	220	5,900	3,310	16,600	35,500	4,990	2,650	922	334	162	98
6	222	217	9,160	2,980	15,800	26,600	7,270	2,610	886	326	162	98
7	212	215	10,300	2,760	15,000	20,600	9,430	2,550	840	318	150	98
8	205	210	6,250	2,590	10,600	17,100	7,930	2,550	934	310	144	101
9	198	442	5,250	2,470	8,980	14,700	6,670	2,490	994	295	138	101
10	194	2,360	8,980	2,290	8,050	13,400	5,680	2,430	994	275	126	101
11	190	1,520	9,280	2,160	7,240	14,700	5,410	2,210	970	275	120	101
12	185	2,090	14,200	2,210	6,580	14,200	14,800	2,080	886	268	117	101
13	180	5,070	17,400	2,190	5,950	12,600	23,900	2,010	820	261	110	104
14	177	5,270	11,000	2,120	5,680	11,700	21,600	1,920	770	261	110	107
15	180	3,280	9,370	2,050	5,500	10,400	17,900	1,850	740	254	110	107
16	178	2,050	7,420	1,960	5,200	9,220	12,700	1,850	690	240	110	98
17	177	1,440	5,680	1,900	4,880	8,680	9,460	1,940	660	236	117	132
18	172	1,100	4,880	1,900	4,630	8,110	8,110	1,940	641	228	120	186
19	180	900	4,500	2,070	4,480	7,330	7,450	1,820	623	222	132	150
20	203	774	4,080	3,360	5,680	6,610	6,610	1,690	596	216	138	110
21	235	696	3,800	18,900	6,400	6,070	5,770	1,830	560	216	138	101
22	231	633	16,700	56,700	11,500	7,390	5,020	1,940	533	216	138	94
23	227	584	35,200	113,000	29,700	13,900	4,650	1,790	515	210	138	88
24	234	584	25,600	55,500	49,500	11,700	5,200	1,530	506	210	132	88
25	245	626	29,500	35,400	45,000	21,800	5,560	1,450	515	204	132	88
26	252	1,190	16,600	28,200	66,900	17,600	4,830	1,390	506	204	126	126
27	244	6,080	11,600	21,000	54,300	12,400	4,300	1,330	479	204	120	596
28	233	7,270	9,010	16,700	52,000	10,100	3,890	1,310	454	198	114	898
29	224	10,600	7,180	13,300	76,700	9,280	3,580	1,300	422	198	114	1,450
30	217	8,280	5,890	11,300	------	8,470	3,400	1,260	414	198	110	922
31	216	------	4,900	10,000	------	7,690	------	1,220	------	192	104	------
TOTAL	6,704	64,574	322,750	434,360	556,220	549,750	237,750	62,790	22,212	8,065	4,122	6,651
MEAN	216	2,152	10,410	14,010	19,180	17,730	7,925	2,025	740	260	133	222
MAX	290	10,600	35,200	113,000	76,700	61,200	23,900	3,230	1,200	398	186	1,450
MIN	172	210	3,800	1,900	4,480	6,070	3,400	1,220	414	192	104	88
AC-FT	13,300	128,100	640,200	861,600	1,103M	1,090M	471,600	124,500	44,060	16,000	8,180	13,190

CAL YR 1971 TOTAL 2,652,883 MEAN 7,268 MAX 182,000 MIN 130 AC-FT 5,262,000
WTR YR 1972 TOTAL 2,275,948 MEAN 6,218 MAX 113,000 MIN 88 AC-FT 4,514,000

PEAK DISCHARGE (BASE, 72,000 CFS)

DATE	TIME	G.H.	DISCHARGE	DATE	TIME	G.H.	DISCHARGE
1-23	1200	31.77	133,000	2-29	1100	26.30	86,400
2-26	1300	25.14	77,100				

11477500 VAN DUZEN RIVER NEAR DINSMORES, CALIF.

LOCATION.--Lat 40°29'05", long 123°39'25", in NE¼NW¼ sec.7, T.1 N., R.5 E., Humboldt County, on right bank 10 ft upstream from private road bridge, 0.3 mile upstream from South Fork, and 2.8 miles west of Dinsmores.

DRAINAGE AREA.--85.1 sq mi.

PERIOD OF RECORD.--August 1953 to September 1958, October 1963 to current year.

GAGE.--Water-stage recorder. Datum of gage is 1,996.88 ft above mean sea level. Aug. 19, 1953, to Sept. 30, 1958, at site 1.7 miles upstream at different datum.

AVERAGE DISCHARGE.--14 years, 387 cfs (280,400 acre-ft per year).

EXTREMES.--Current year: Maximum discharge, 11,300 cfs Jan. 22 (gage height, 12.15 ft); minimum daily, 1.5 cfs Sept. 23-25.
Period of record: Maximum discharge, 27,000 cfs Dec. 22, 1964 (gage height, 22.5 ft, from floodmarks), from rating curve extended above 10,000 cfs on basis of slope-area measurement of maximum flow; minimum, 1.5 cfs Sept. 23-25, 1972.

REMARKS.--Records good. No regulation or diversion above station. Records of water temperatures for the current year are published in Part 2 of this report.

DISCHARGE, IN CUBIC FEET PER SECOND, WATER YEAR OCTOBER 1971 TO SEPTEMBER 1972

DAY	OCT	NOV	DEC	JAN	FEB	MAR	APR	MAY	JUN	JUL	AUG	SEP
1	37	10	319	217	315	1,700	208	179	54	17	4.2	2.8
2	27	10	277	226	286	3,100	199	170	52	16	4.2	2.8
3	22	10	247	228	276	3,220	179	159	49	15	4.2	2.8
4	17	9.8	209	209	533	1,730	163	154	46	14	3.7	2.8
5	14	9.3	528	199	575	1,400	325	148	43	14	3.7	2.8
6	12	9.0	1,570	193	476	1,140	620	139	41	13	3.7	2.8
7	10	9.0	524	195	442	880	670	139	37	13	3.3	2.4
8	9.3	8.9	335	190	406	727	474	139	34	12	3.7	2.4
9	8.4	27	874	179	387	656	389	129	46	12	3.7	2.4
10	7.7	143	517	175	361	880	337	123	58	11	3.7	2.4
11	7.0	161	358	166	336	1,120	382	117	51	11	3.3	2.4
12	7.0	196	326	186	319	942	658	114	44	11	3.3	2.4
13	6.5	597	268	202	323	938	610	107	38	10	3.3	2.4
14	6.0	250	283	193	349	692	555	106	33	9.5	3.3	2.4
15	6.0	139	271	186	354	590	550	104	30	9.5	2.8	2.4
16	6.0	99	233	193	321	486	486	103	28	8.0	2.8	2.4
17	6.0	75	234	195	300	454	396	111	25	7.0	4.3	2.4
18	6.0	59	258	257	285	410	354	98	24	7.0	5.0	2.2
19	6.2	50	250	422	305	384	322	93	23	6.5	5.6	1.9
20	8.8	46	231	923	877	325	298	98	22	6.5	4.6	1.9
21	12	45	238	2,720	482	307	270	104	21	6.0	4.6	1.9
22	12	41	1,770	6,160	807	712	252	101	20	6.0	4.6	1.8
23	13	39	1,130	4,180	1,250	520	237	86	21	6.0	4.6	1.5
24	14	51	1,080	1,700	1,570	1,190	319	83	21	6.0	4.2	1.5
25	14	90	747	1,330	1,420	1,210	304	78	25	5.5	3.7	1.5
26	13	930	426	842	2,940	742	264	78	20	5.5	3.7	178
27	12	695	319	588	2,150	450	244	72	19	5.1	2.8	193
28	10	1,100	261	464	3,640	358	232	68	18	5.1	2.8	57
29	9.8	1,260	241	404	2,780	310	208	63	18	4.6	2.8	31
30	9.7	565	223	363	------	259	190	59	17	4.6	2.8	21
31	10	------	210	344	------	232	------	57	------	4.2	2.8	------
TOTAL	359.4	6,734.0	14,757	24,029	24,865	28,034	10,695	3,376	978	281.6	115.8	537.4
MEAN	11.6	224	476	775	857	904	357	109	32.6	9.08	3.74	17.9
MAX	37	1,260	1,770	6,160	3,640	3,220	670	179	58	17	5.6	193
MIN	6.0	8.9	209	166	276	232	163	57	17	4.2	2.8	1.5
AC-FT	713	13,360	29,270	47,660	49,320	55,610	21,210	6,700	1,940	559	230	1,070

CAL YR 1971 TOTAL 128,541.7 MEAN 352 MAX 7,460 MIN 2.4 AC-FT 255,000
WTR YR 1972 TOTAL 114,762.2 MEAN 314 MAX 6,160 MIN 1.5 AC-FT 227,600

PEAK DISCHARGE (BASE, 6,000 CFS).--Jan. 22 (2015) 11,300 cfs (12.15 ft); Feb. 28 (2030) 6,420 cfs (9.90 ft).

11478500 VAN DUZEN RIVER NEAR BRIDGEVILLE, CALIF.

LOCATION.--Lat 40°28'50", long 123°53'23", in NE¼SE¼ sec.12, T.1 N., R.2 E., Humboldt County, on left bank at downstream side of bridge on State Highway 36, 0.9 mile upstream from Grizzly Creek, and 5 miles west of Bridgeville.

DRAINAGE AREA.--222 sq mi.

PERIOD OF RECORD.--October 1950 to current year.

GAGE.--Water-stage recorder. Datum of gage is 358.18 ft above mean sea level. Prior to Oct. 1, 1965, at site 2.4 miles upstream at different datum.

AVERAGE DISCHARGE.--22 years, 911 cfs (660,000 acre-ft per year).

EXTREMES.--Current year: Maximum discharge, 21,200 cfs Jan. 29 (gage height, 16.00 ft); minimum daily, 9.4 cfs Sept. 17-25.
Period of record: Maximum discharge, 48,700 cfs Dec. 22, 1964 (gage height, 24.0 ft, present site and datum, from floodmarks), from rating curve extended above 20,000 cfs on basis of slope-area measurement at gage height 21.3 ft, former site and datum; minimum, 5.0 cfs Sept. 13, 1959.

REMARKS.--Records excellent. No storage or large diversion above station. Records of chemical analyses and water temperatures for the current year are published in Part 2 of this report.

DISCHARGE, IN CUBIC FEET PER SECOND, WATER YEAR OCTOBER 1971 TO SEPTEMBER 1972

DAY	OCT	NOV	DEC	JAN	FEB	MAR	APR	MAY	JUN	JUL	AUG	SEP
1	119	33	1,160	637	2,000	4,640	791	374	120	47	16	11
2	74	33	1,360	646	850	11,700	755	353	117	44	16	10
3	54	33	1,400	619	790	11,300	670	328	115	41	15	10
4	47	32	1,100	523	1,360	5,480	616	314	110	40	15	9.7
5	40	31	3,960	474	1,580	3,510	920	300	105	38	15	9.7
6	33	31	4,330	453	1,300	2,160	1,700	287	101	37	14	9.7
7	31	28	1,790	453	1,160	1,680	1,930	278	97	36	14	9.7
8	28	28	1,440	443	1,010	1,400	1,610	296	92	35	13	9.7
9	25	157	2,680	399	940	1,260	1,390	269	110	34	13	9.7
10	24	1,130	1,740	375	880	1,520	1,120	249	145	32	13	9.7
11	23	777	1,520	349	830	2,060	1,180	233	136	32	12	9.7
12	20	889	1,560	339	780	1,850	2,100	222	117	31	12	9.7
13	20	2,540	1,300	460	740	1,750	1,700	211	103	31	12	9.7
14	19	1,190	1,670	538	780	1,440	1,500	208	94	29	12	9.7
15	18	609	1,210	509	840	1,210	1,380	201	90	28	11	9.7
16	18	391	1,050	462	750	1,140	1,210	197	86	26	11	9.7
17	18	279	1,080	440	682	1,000	1,000	226	82	24	13	9.4
18	18	214	1,050	436	646	930	850	208	81	24	14	9.4
19	19	173	960	438	619	810	728	194	77	23	15	9.4
20	28	147	840	586	1,720	700	646	187	73	23	14	9.4
21	38	133	4,860	700	1,210	628	581	201	67	22	14	9.4
22	36	118	7,820	1,020	2,700	1,630	525	208	62	22	14	9.4
23	36	105	5,040	1,000	3,510	1,600	504	187	62	21	14	9.4
24	40	152	4,340	990	4,760	3,620	782	177	62	21	14	9.4
25	42	240	3,280	1,040	2,860	3,960	755	166	61	21	14	9.4
26	38	2,600	1,730	1,100	8,070	2,260	609	157	59	20	13	29
27	36	2,110	1,310	2,270	5,520	1,730	525	148	58	20	13	385
28	33	3,320	1,070	9,630	10,100	1,440	490	142	55	19	12	157
29	33	3,920	900	15,700	7,960	1,180	445	136	50	18	12	84
30	32	1,920	760	7,710	------	1,010	414	128	49	18	11	62
31	32	------	646	4,480	------	890	------	125	------	16	11	------
TOTAL	1,072	23,363	64,956	55,219	66,947	77,488	29,426	6,910	2,636	873	412	958.7
MEAN	34.6	779	2,095	1,781	2,309	2,500	981	223	87.9	28.2	13.3	32.0
MAX	119	3,920	7,820	15,700	10,100	11,700	2,100	374	145	47	16	385
MIN	18	28	646	339	619	628	414	125	49	16	11	9.4
AC-FT	2,130	46,340	128,800	109,500	132,800	153,700	58,370	13,710	5,230	1,730	817	1,900

CAL YR 1971 TOTAL 334,629.0 MEAN 917 MAX 16,500 MIN 11 AC-FT 663,700
WTR YR 1972 TOTAL 330,260.7 MEAN 902 MAX 15,700 MIN 9.4 AC-FT 655,100

PEAK DISCHARGE (BASE, 15,000 CFS).--Jan. 29 (1330) 21,200 cfs (16.00 ft); Mar. 3 (0100) 18,500 cfs (14.97 ft).

11479000 YAGER CREEK NEAR CARLOTTA, CALIF.

LOCATION.--Lat 40°34'15", long 124°02'55", in SW¼NE¼ sec.10, T.2 N., R.1 E., Humboldt County, on right bank 0.8 mile upstream from Cooper Mill Creek, and 2.4 miles north of Carlotta.

DRAINAGE AREA.--127 sq mi.

PERIOD OF RECORD.--August 1953 to October 1955, August 1956 to September 1960, August 1965 to September 1972 (discontinued).

GAGE.--Water-stage recorder. Altitude of gage is 200 ft (from topographic map). Aug. 18, 1953, to Dec. 22, 1955, at same site at different datum. Aug. 14, 1956, to Sept. 30, 1960, at site 0.2 mile downstream at different datum.

AVERAGE DISCHARGE.--13 years, 382 cfs (276,800 acre-ft per year).

EXTREMES.--Current year: Maximum discharge, 19,200 cfs Mar. 2 (gage height, 14.62 ft); minimum daily, 4.6 cfs Sept. 10-18.
Period of record: Maximum discharge, 30,000 cfs Dec. 22, 1964 (gage height, 19.9 ft, from floodmarks), from rating curve extended above 250 cfs on basis of field estimate of maximum flow; minimum, 2.8 cfs Sept. 30, 1969.

REMARKS.--Records good. No regulation or diversion above station.

DISCHARGE, IN CUBIC FEET PER SECOND, WATER YEAR OCTOBER 1971 TO SEPTEMBER 1972

DAY	OCT	NOV	DEC	JAN	FEB	MAR	APR	MAY	JUN	JUL	AUG	SEP
1	41	19	886	366	455	1,620	230	140	52	30	10	5.0
2	25	17	1,150	334	387	9,400	217	130	52	26	9.6	5.0
3	19	16	1,340	309	364	7,440	195	122	48	21	9.6	5.0
4	16	14	1,170	270	598	1,700	179	115	47	21	9.6	5.0
5	14	14	3,210	239	576	1,000	215	110	45	21	9.0	5.0
6	12	13	4,240	219	465	760	379	106	44	20	9.6	5.0
7	12	14	1,600	208	400	614	428	104	42	20	8.2	5.0
8	11	15	1,070	195	340	506	418	104	40	19	7.8	5.0
9	10	95	1,930	187	295	432	355	96	64	18	7.8	5.0
10	9.9	1,410	1,760	178	259	439	288	93	83	17	7.8	4.6
11	9.6	677	1,340	179	226	490	344	87	82	16	7.8	4.6
12	9.2	655	1,620	435	200	546	998	82	63	16	7.3	4.6
13	9.0	2,110	1,200	459	190	490	806	78	53	16	6.9	4.6
14	8.2	939	1,520	354	201	404	574	74	48	16	6.5	4.6
15	8.9	486	1,470	294	227	348	456	71	47	15	6.9	4.6
16	9.8	310	938	257	193	303	372	75	44	14	7.3	4.6
17	9.2	229	762	233	173	270	309	108	42	13	8.2	4.6
18	8.9	175	679	254	162	250	280	101	42	13	7.8	4.6
19	9.4	137	610	447	156	221	235	86	40	13	7.3	4.8
20	21	115	534	395	464	201	213	82	38	13	6.9	5.0
21	23	99	519	5,580	305	189	193	89	36	13	6.5	5.0
22	18	87	2,430	7,620	1,350	530	177	95	34	13	6.5	6.0
23	21	78	2,260	4,500	1,430	574	171	82	32	13	5.8	6.0
24	23	104	2,600	1,940	1,490	1,110	312	77	33	13	5.8	5.6
25	21	137	1,730	1,610	1,450	980	293	74	33	13	5.4	5.2
26	18	1,630	1,110	1,150	2,420	650	225	68	33	12	5.4	14
27	19	1,340	809	878	1,440	502	197	65	33	12	5.4	13
28	18	2,220	651	680	3,080	411	181	60	31	11	5.4	9.0
29	16	2,440	556	599	2,200	341	167	57	30	11	5.4	6.4
30	15	1,550	474	540	------	295	151	56	30	11	5.4	6.0
31	18	------	409	507	------	260	------	52	------	10	5.0	------
TOTAL	483.1	17,145	42,577	31,416	21,496	33,276	9,558	2,739	1,341	490	223.9	172.4
MEAN	15.6	572	1,373	1,013	741	1,073	319	88.4	44.7	15.8	7.22	5.75
MAX	41	2,440	4,240	7,620	3,080	9,400	998	140	83	30	10	14
MIN	8.2	13	409	178	156	189	151	52	30	10	5.0	4.6
AC-FT	958	34,010	84,450	62,310	42,640	66,000	18,960	5,430	2,660	972	444	342

CAL YR 1971 TOTAL 167,731.9 MEAN 460 MAX 7,340 MIN 5.2 AC-FT 332,700
WTR YR 1972 TOTAL 160,917.4 MEAN 440 MAX 9,400 MIN 4.6 AC-FT 319,200

PEAK DISCHARGE (BASE, 4,000 CFS)

DATE	TIME	G.H.	DISCHARGE	DATE	TIME	G.H.	DISCHARGE
12-5	2330	10.20	10,400	3-2	2345	14.62	19,200
1-22	1845	11.17	12,300				

11480400 RUTH RESERVOIR NEAR FOREST GLEN, CALIF.

LOCATION.--Lat 40°21'29", long 123°25'20", in SE¼SE¼ sec.19, T.1 S., R.7 E., Trinity County, Six Rivers National Forest, near center of Ruth Dam on Mad River, 5.2 miles west of Forest Glen.

DRAINAGE AREA.--119 sq mi.

PERIOD OF RECORD.--October 1966 to current year. Records prior to October 1966 in files of Humboldt Bay Municipal Water District.

GAGE.--Water-stage recorder. Datum of gage is at mean sea level (levels by Humboldt Bay Municipal Water District).

EXTREMES.--Current year: Maximum contents, 58,100 acre-ft Feb. 29 (elevation, 2,659.54 ft); minimum, 22,900 acre-ft Nov. 26 (elevation, 2,623.67 ft).
Period of record: Maximum contents, 63,500 acre-ft Jan. 24, 1970 (elevation, 2,663.87 ft); minimum, 14,700 acre-ft Nov. 16 to Dec. 2, 1967 (elevation, 2,612.34 ft).

REMARKS.--Reservoir is formed by earthfill dam; storage began July 1961. Total capacity, 51,800 acre-ft at elevation 2,654.0 ft, crest of spillway. Water is released down Mad River for municipal use. Records given herein represent total contents.

CAPACITY TABLE (ELEVATION, IN FEET, AND CONTENTS, IN ACRE-FEET)

2,595	6,670	2,620	20,100	2,640	37,300	2,660	58,700
2,600	8,520	2,625	23,900	2,645	42,300	2,665	65,000
2,605	10,700	2,630	27,800	2,650	47,400	2,670	72,300
2,610	13,300	2,635	32,500	2,655	52,900	2,675	80,300
2,615	16,500						

CONTENTS, IN ACRE-FEET, AT 2400, WATER YEAR OCTOBER 1971 TO SEPTEMBER 1972

DAY	OCT	NOV	DEC	JAN	FEB	MAR	APR	MAY	JUN	JUL	AUG	SEP
1	33,800	26,800	26,000	40,000	51,900	55,300	51,900	51,900	51,600	49,400	44,200	38,300
2	33,600	26,600	26,100	40,200	51,700	56,100	51,700	52,000	51,500	49,300	44,000	38,000
3	33,400	26,400	26,200	40,400	51,600	56,800	51,500	52,200	51,400	49,100	43,900	37,800
4	33,100	26,200	26,200	40,600	51,900	55,500	51,300	52,200	51,400	49,000	43,700	37,700
5	32,900	26,000	26,400	40,700	52,300	54,500	51,400	52,200	51,300	48,800	43,500	37,400
6	32,600	25,800	27,400	40,700	52,500	54,000	51,600	52,200	51,300	48,700	43,400	37,200
7	32,300	25,600	27,800	40,800	52,600	53,500	51,800	52,200	51,200	48,500	43,200	37,000
8	32,100	25,400	28,100	41,000	52,500	53,100	51,900	52,200	51,100	48,400	43,100	36,800
9	31,800	25,300	28,500	41,100	52,400	53,000	51,800	52,200	51,100	48,200	42,900	36,600
10	31,500	25,100	29,000	41,100	52,300	53,000	51,700	52,200	51,100	48,100	42,700	36,300
11	31,200	25,000	29,300	41,200	52,200	53,000	52,000	52,200	51,000	47,900	42,500	36,100
12	31,000	24,900	29,500	41,300	52,100	52,900	52,400	52,100	51,000	47,800	42,300	35,900
13	30,700	24,900	29,600	41,400	51,900	52,800	52,700	52,100	51,000	47,600	42,100	35,700
14	30,500	24,800	29,700	41,500	51,900	52,700	52,700	52,000	50,900	47,400	41,900	35,500
15	30,300	24,600	29,800	41,600	51,700	52,600	52,700	51,900	50,800	47,200	41,700	35,300
16	30,000	24,500	29,900	41,800	51,600	52,700	52,500	51,900	50,800	46,900	41,500	35,100
17	29,800	24,300	29,900	41,900	51,300	52,600	52,400	51,800	50,700	46,700	41,300	34,900
18	29,700	24,100	30,000	42,200	51,100	52,300	52,200	51,900	50,700	46,500	41,200	34,700
19	29,500	24,000	30,100	42,800	50,900	52,100	52,000	52,000	50,600	46,300	41,000	34,500
20	29,300	23,800	30,200	43,800	50,900	51,900	51,900	52,100	50,500	46,200	40,800	34,200
21	29,100	23,600	30,600	47,400	50,900	51,700	51,700	52,000	50,500	46,000	40,500	34,000
22	28,900	23,400	34,000	56,100	51,600	52,100	51,500	52,000	50,300	45,900	40,300	33,800
23	28,600	23,300	35,700	56,900	53,600	52,200	51,300	52,000	50,300	45,700	40,100	33,500
24	28,400	23,100	37,200	55,300	54,700	53,000	51,200	51,900	50,100	45,500	39,900	33,300
25	28,200	22,900	38,200	54,200	55,100	53,500	51,100	51,900	50,100	45,400	39,700	33,100
26	28,100	23,500	38,800	53,400	56,600	53,300	51,200	51,900	50,000	45,200	39,500	32,900
27	27,800	24,000	39,200	53,000	55,900	52,900	51,300	51,800	49,900	45,000	39,300	32,700
28	27,600	24,800	39,500	52,600	58,000	52,700	51,300	51,800	49,800	44,800	39,100	32,500
29	27,400	25,500	39,700	52,300	56,700	52,400	51,400	51,700	49,700	44,700	38,900	32,200
30	27,200	25,900	39,800	52,200	------	52,200	51,600	51,700	49,600	44,500	38,700	32,000
31	27,000	------	39,900	52,000	------	52,000	------	51,600	------	44,300	38,500	------
MAX	33,800	26,800	39,900	56,900	58,000	56,800	52,700	52,200	51,600	49,400	44,200	38,300
MIN	27,000	22,900	26,000	40,000	50,900	51,700	51,100	51,600	49,600	44,300	38,500	32,000
(a)	2,628.92	2,627.55	2,642.52	2,654.18	2,658.28	2,654.19	2,653.81	2,653.82	2,651.99	2,647.01	2,641.13	2,634.57
(b)	-7,100	-1,100	+14,000	+12,100	+4,700	-4,700	-400	0	-2,000	-5,300	-5,800	-6,500

CAL YR 1971 b -13,200
WTR YR 1972 b -2,100

a Elevation, in feet, at end of month.
b Change in contents, in acre-feet.

11480500 MAD RIVER NEAR FOREST GLEN, CALIF.

LOCATION.--Lat 40°27'30", long 123°30'35", in SW¼ sec.16, T.1 N., R.6 E., Trinity County, Six Rivers National Forest, on right bank 0.7 mile downstream from Lamb Creek, and 11.1 miles northwest of Forest Glen.

DRAINAGE AREA.--143 sq mi.

PERIOD OF RECORD.--June 1953 to current year.

GAGE.--Water-stage recorder. Datum of gage is 2,408.18 ft above mean sea level. Prior to Dec. 22, 1955, water-stage recorder at site 0.7 mile upstream at different datum. Jan. 13 to June 18, 1956, nonrecording gage at former site at datum 4.17 ft lower than former datum.

AVERAGE DISCHARGE.--19 years, 381 cfs (276,000 acre-ft per year).

EXTREMES.--Current year: Maximum discharge, 5,570 cfs Feb. 29 (gage height, 8.73 ft); minimum daily, 32 cfs May 1.

Period of record: Maximum discharge, 39,200 cfs Dec. 22, 1955 (gage height, 24.5 ft, from floodmarks, present datum), from rating curve extended above 8,100 cfs on basis of slope-area measurement of maximum flow; minimum daily, 0.60 cfs Sept. 15, 1961.

REMARKS.--Records excellent. Flow regulated by Ruth Reservoir 9 miles upstream beginning in July 1961 (see sta 11480400). No diversion above station. Records of water temperatures and suspended-sediment discharge for the current year are published in Part 2 of this report.

REVISIONS (WATER YEARS).--WSP 1395: 1954. WSP 1715: 1957(M), 1958(P).

DISCHARGE, IN CUBIC FEET PER SECOND, WATER YEAR OCTOBER 1971 TO SEPTEMBER 1972

DAY	OCT	NOV	DEC	JAN	FEB	MAR	APR	MAY	JUN	JUL	AUG	SEP
1	101	103	132	151	308	3,030	421	32	68	74	81	99
2	101	103	137	157	297	3,060	396	41	67	73	86	99
3	101	103	136	156	289	4,460	386	76	66	73	89	99
4	101	103	130	151	530	3,210	386	98	66	73	86	99
5	100	103	200	146	920	2,090	404	107	65	73	79	99
6	111	103	309	144	890	1,500	417	119	65	73	79	99
7	140	103	178	131	925	1,150	425	120	65	73	79	99
8	141	103	148	98	660	931	418	122	64	72	79	99
9	141	114	200	96	562	793	410	117	68	73	81	99
10	141	110	174	94	515	744	401	111	54	69	95	99
11	127	118	151	93	475	770	431	106	53	62	95	98
12	95	116	151	97	441	732	523	124	51	62	95	97
13	95	154	140	103	417	712	629	144	51	69	95	97
14	96	118	146	98	401	663	663	127	51	129	95	97
15	96	109	145	72	387	605	657	114	50	130	94	95
16	95	106	138	73	379	424	618	108	49	130	96	91
17	95	105	141	74	376	444	560	104	49	121	95	91
18	95	105	150	88	365	550	505	35	49	95	97	92
19	95	104	148	115	379	469	461	38	48	94	100	107
20	92	103	143	134	401	424	427	63	48	81	100	106
21	103	103	172	392	392	395	399	131	48	81	100	106
22	103	103	516	902	481	443	389	120	48	81	99	106
23	106	102	301	4,460	627	476	389	107	48	81	99	108
24	103	104	337	2,740	1,680	624	380	98	48	81	99	108
25	103	103	255	1,620	1,750	985	317	92	48	81	99	107
26	103	200	206	1,010	3,240	963	205	88	47	89	99	128
27	104	151	181	680	3,280	810	167	83	48	101	99	111
28	104	228	165	500	3,970	683	168	80	48	100	99	109
29	105	223	157	410	4,970	580	130	77	73	81	99	108
30	106	158	151	360	------	508	116	73	73	81	99	108
31	104	------	148	330	------	456	------	68	------	81	99	------
TOTAL	3,303	3,661	5,786	15,675	30,307	33,684	12,198	2,923	1,676	2,637	2,886	3,060
MEAN	107	122	187	506	1,045	1,087	407	94.3	55.9	85.1	93.1	102
MAX	141	228	516	4,460	4,970	4,460	663	144	73	130	100	128
MIN	92	102	130	72	289	395	116	32	47	62	79	91
AC-FT	6,550	7,260	11,480	31,090	60,110	66,810	24,190	5,800	3,320	5,230	5,720	6,070

CAL YR 1971 TOTAL 138,026 MEAN 378 MAX 9,240 MIN 27 AC-FT 273,800
WTR YR 1972 TOTAL 117,796 MEAN 322 MAX 4,970 MIN 32 AC-FT 233,600

11480750 MAD RIVER NEAR KNEELAND, CALIF.

LOCATION.--Lat 40°45'50", long 123°53'20", in NW¼NW¼ sec.6, T.4 N., R.3 E., Humboldt County, on left bank at mouth of Maple Creek 30 ft upstream from bridge, and 5.4 miles east of Kneeland.

DRAINAGE AREA.--352 sq mi.

PERIOD OF RECORD.--October 1965 to current year.

GAGE.--Water-stage recorder. Datum of gage is 329.66 ft above mean sea level.

AVERAGE DISCHARGE.--7 years, 1,210 cfs (876,600 acre-ft per year).

EXTREMES.--Current year: Maximum discharge, 33,300 cfs Mar. 2 (gage height, 22.57 ft); minimum daily, 89 cfs Aug. 9.
Period of record: Maximum discharge, 33,300 cfs Mar. 2, 1972 (gage height, 22.57 ft); minimum daily, 55 cfs Oct. 3-8, Nov. 5, 1966.
Flood of Dec. 22, 1964, reached a stage of 37.99 ft, from floodmarks (discharge, 55,000 cfs).

REMARKS.--Records good. Flow regulated by Ruth Reservoir 47 miles upstream (see sta 11480400). No diversion above station. Records of chemical analyses, water temperatures, suspended-sediment discharge, and sediment and turbidity data for the current year are published in Part 2 of this report.

REVISIONS (WATER YEARS).--WRD Calif. 1971: 1970.

DISCHARGE, IN CUBIC FEET PER SECOND, WATER YEAR OCTOBER 1971 TO SEPTEMBER 1972

DAY	OCT	NOV	DEC	JAN	FEB	MAR	APR	MAY	JUN	JUL	AUG	SEP
1	168	148	1,350	787	1,090	7,900	1,150	405	182	116	96	106
2	143	143	1,270	871	960	23,200	1,230	326	182	114	96	106
3	136	139	1,450	859	920	17,100	1,080	308	182	114	100	106
4	132	136	1,030	763	1,340	8,020	984	313	182	110	104	106
5	128	132	4,120	665	1,610	6,200	1,230	313	179	108	100	106
6	126	132	6,950	599	1,530	4,490	1,800	313	175	106	93	106
7	131	131	2,660	615	1,560	3,400	2,360	317	172	104	91	106
8	150	134	1,750	551	1,500	2,780	2,180	322	172	102	91	106
9	148	519	3,800	487	1,440	2,280	1,940	299	189	102	89	104
10	142	2,090	2,980	437	1,370	2,170	1,670	278	196	102	91	104
11	138	1,080	2,110	425	1,280	2,240	1,760	262	186	98	104	104
12	138	1,020	2,210	787	1,190	2,480	3,120	242	175	91	104	104
13	120	3,000	1,560	871	1,190	2,440	2,340	258	169	91	104	104
14	120	1,600	2,210	739	1,320	2,150	2,000	254	163	95	104	102
15	120	871	1,940	675	1,290	1,940	2,060	234	157	140	106	102
16	121	583	1,330	665	1,140	1,720	1,840	250	148	166	108	100
17	120	463	1,230	655	1,080	1,240	1,700	322	145	166	116	95
18	118	390	1,270	1,320	1,040	1,680	1,610	262	135	154	112	95
19	123	332	1,230	1,970	1,020	1,480	1,380	193	130	125	112	96
20	162	305	1,170	2,080	1,840	1,360	1,180	193	125	120	116	112
21	134	280	1,140	9,750	1,380	1,290	996	290	120	106	118	112
22	132	239	5,140	15,500	2,660	2,480	910	313	116	104	116	112
23	160	216	3,920	13,800	3,550	2,380	930	270	114	102	116	112
24	166	385	3,920	6,630	5,530	4,880	1,290	242	112	102	116	112
25	148	437	2,890	5,280	5,400	5,020	1,200	222	110	100	114	116
26	141	4,220	1,960	4,030	9,500	3,400	890	207	106	98	112	182
27	148	3,580	1,490	2,740	8,620	2,720	656	196	102	106	110	317
28	141	5,460	1,170	1,900	13,100	2,100	632	193	100	123	108	151
29	132	5,140	979	1,530	11,100	1,630	522	189	96	123	108	138
30	132	3,180	835	1,370	------	1,420	465	186	114	100	108	133
31	166	------	751	1,200	------	1,250	------	186	------	98	106	------
TOTAL	4,284	36,485	67,815	80,551	86,550	124,840	43,105	8,158	4,434	3,486	3,269	3,555
MEAN	138	1,216	2,188	2,598	2,984	4,027	1,437	263	148	112	105	119
MAX	168	5,460	6,950	15,500	13,100	23,200	3,120	405	196	166	118	317
MIN	118	131	751	425	920	1,240	465	186	96	91	89	95
AC-FT	8,500	72,370	134,500	159,800	171,700	247,600	85,500	16,180	8,790	6,910	6,480	7,050

CAL YR 1971 TOTAL 491,720 MEAN 1,347 MAX 21,300 MIN 99 AC-FT 975,300
WTR YR 1972 TOTAL 466,532 MEAN 1,275 MAX 23,200 MIN 89 AC-FT 925,400

11481000 MAD RIVER NEAR ARCATA, CALIF.

LOCATION.--Lat 40°54'35", long 124°03'35", in NW¼ sec.15, T.6 N., R.1 E., Humboldt County, on right bank 100 ft upstream from bridge on U.S. Highway 299, 1.0 mile downstream from Warren Creek, and 2.8 miles northeast of Arcata.

DRAINAGE AREA.--485 sq mi.

PERIOD OF RECORD.--October 1910 to September 1913, August 1950 to current year. Monthly discharge only for some periods published in WSP 1315-B.

GAGE.--Water-stage recorder. Datum of gage is 12.79 ft above mean sea level. December 1910 to September 1913, nonrecording gage at site 0.1 mile upstream at different datum. Aug. 15, 1950, to July 23, 1956, water-stage recorder at site 0.6 mile upstream at datum 11.00 ft higher. July 24, 1956, to Apr. 9, 1965, water-stage recorder at datum 5.00 ft higher. Aug. 29 to Oct. 26, 1961, auxiliary water-stage recorder at site 0.5 mile downstream at different datum.

AVERAGE DISCHARGE (adjusted for diversions).--25 years, 1,535 cfs (1,112,000 acre-ft per year).

EXTREMES.--Current year: Maximum discharge, 54,400 cfs Mar. 2 (gage height, 23.44 ft); minimum daily, 5.6 cfs Aug. 10, 11.

Period of record: Maximum discharge (revised), 81,000 cfs (revised) Dec. 22, 1964 (gage height, 30.7 ft, present datum, from high-water mark profile); minimum, 0.75 cfs July 31, 1970.

REVISIONS.--The maximum discharge for the water year 1965 has been revised to 81,000 cfs Dec. 22, 1964 (gage height, 30.7 ft, present datum, from high-water mark profile), superseding figure published in WSP 1866-B and 1929.

REMARKS.--Records good. Flow regulated by Ruth Reservoir 68 miles upstream beginning in July 1961 (see sta 11480400). Water is diverted 0.5 mile upstream from station for municipal supply and industrial use in Humboldt Bay area. Records of chemical analyses, water temperatures, suspended-sediment discharge, and sediment and turbidity data for the current year are published in Part 2 of this report.

DISCHARGE, IN CUBIC FEET PER SECOND, WATER YEAR OCTOBER 1971 TO SEPTEMBER 1972

DAY	OCT	NOV	DEC	JAN	FEB	MAR	APR	MAY	JUN	JUL	AUG	SEP
1	255	114	2,280	786	1,760	9,510	1,240	572	173	39	20	39
2	152	100	2,310	778	1,520	34,200	1,280	446	175	42	14	52
3	117	88	2,780	738	1,380	29,800	1,140	394	153	53	10	54
4	93	80	2,290	709	1,590	12,700	1,040	388	149	86	22	61
5	77	75	5,310	632	2,000	8,330	1,090	397	144	80	22	51
6	70	69	12,500	578	1,780	5,800	1,810	385	135	90	15	25
7	60	75	4,550	578	1,720	4,160	2,410	397	118	53	10	12
8	87	79	2,670	554	1,610	3,170	2,160	414	114	39	8.8	8.8
9	105	108	4,980	500	1,490	2,590	1,980	379	194	33	8.0	8.8
10	107	2,690	4,790	454	1,370	2,350	1,600	352	258	42	5.6	20
11	101	1,330	3,970	448	1,250	2,450	1,570	325	219	53	5.6	10
12	96	1,080	3,560	802	1,140	2,540	3,600	304	171	30	8.0	25
13	65	3,420	3,070	899	1,100	2,630	3,000	295	144	25	11	20
14	48	2,540	3,180	770	1,160	2,260	2,500	310	122	22	11	12
15	44	1,220	3,580	688	1,330	1,890	2,300	286	94	34	18	10
16	49	767	2,320	639	1,140	1,660	2,180	307	90	73	28	7.2
17	44	593	1,760	625	1,060	1,240	2,000	467	84	75	28	22
18	37	494	1,580	1,050	998	1,320	1,820	400	88	80	22	7.2
19	49	419	1,390	2,280	962	1,210	1,720	286	86	56	20	6.4
20	100	371	1,190	2,090	1,940	1,050	1,550	253	90	44	28	10
21	114	345	1,030	17,500	1,620	960	1,430	316	58	41	30	30
22	75	307	4,710	30,600	3,600	1,500	1,200	404	53	28	30	28
23	98	285	4,610	22,400	3,960	2,100	1,020	352	46	28	25	33
24	143	363	4,820	10,600	6,100	3,470	1,160	319	49	28	17	30
25	110	538	4,240	7,240	5,560	5,400	1,230	289	46	28	14	42
26	93	4,180	2,640	5,500	10,500	3,650	1,000	258	49	28	17	80
27	102	4,790	1,910	4,210	9,500	2,890	825	238	39	26	22	240
28	97	6,120	1,470	3,250	14,000	2,320	750	217	42	34	20	182
29	87	6,520	1,190	2,620	13,600	1,860	668	197	36	41	12	102
30	86	4,360	998	2,210	------	1,650	604	186	36	34	31	86
31	121	------	850	1,980	------	1,410	------	173	------	30	38	------
TOTAL	2,882	43,520	98,528	124,708	96,740	158,070	47,877	10,306	3,255	1,395	571.0	1,314.4
MEAN	93.0	1,451	3,178	4,023	3,336	5,099	1,596	332	109	45.0	18.4	43.8
MAX	255	6,520	12,500	30,600	14,000	34,200	3,600	572	258	90	38	240
MIN	37	69	850	448	962	960	604	173	36	22	5.6	6.4
AC-FT	5,720	86,320	195,400	247,400	191,900	313,500	94,960	20,440	6,460	2,770	1,130	2,610
(a)	5,080	4,430	4,190	4,630	4,170	4,490	4,510	4,900	5,090	5,140	5,460	5,030

CAL YR 1971 TOTAL 597,831.0 MEAN 1,638 MAX 24,500 MIN 25 AC-FT 1,186,000 a 53,700
WTR YR 1972 TOTAL 589,166.4 MEAN 1,610 MAX 34,200 MIN 5.6 AC-FT 1,169,000 a 57,120

a Diversion, in acre-feet, for municipal supply and industrial use, furnished by Humboldt Municipal Water District.

11481200 LITTLE RIVER NEAR TRINIDAD, CALIF.
(Formerly published as Little River at Crannell)

LOCATION.--Lat 41°00'40", long 124°04'50", in NE¼ sec.8, T.7 N., R.1 E., Humboldt County, on right bank 0.5 mile upstream from Coon Creek, 4.7 miles southeast of Trinidad, and 9.1 miles north of Arcata.

DRAINAGE AREA.--44.4 sq mi.

PERIOD OF RECORD.--October 1955 to current year. Prior to October 1971, published as "at Crannell."

GAGE.--Water-stage recorder. Datum of gage is 17.62 ft above mean sea level.

AVERAGE DISCHARGE.--17 years, 145 cfs (105,100 acre-ft per year).

EXTREMES.--Current year: Maximum discharge, 9,720 cfs Jan. 22 (gage height, 14.08 ft), from rating curve extended as explained below; minimum daily, 6.0 cfs Sept. 9-18.
Period of record: Maximum discharge, 9,720 cfs Jan. 22, 1972 (gage height, 14.08 ft), from rating curve extended above 3,100 cfs on basis of slope-area measurement at gage height 14.08 ft; minimum daily, 2.8 cfs Oct. 20-22, 1964.
Flood of Jan. 17, 18, 1953, reached a stage of 15.7 ft, observed by an employee of Hammond Lumber Co.

REMARKS.--Records good. No storage or diversion above station.

REVISIONS (WATER YEARS).--WRD Calif. 1964: 1956-60.

DISCHARGE, IN CUBIC FEET PER SECOND, WATER YEAR OCTOBER 1971 TO SEPTEMBER 1972

DAY	OCT	NOV	DEC	JAN	FEB	MAR	APR	MAY	JUN	JUL	AUG	SEP
1	59	16	299	91	173	950	112	63	32	17	10	6.4
2	31	16	381	82	146	7,340	120	60	30	16	10	6.4
3	22	14	440	77	127	3,460	104	57	30	16	9.9	6.4
4	19	14	365	69	127	968	98	55	30	16	9.9	6.4
5	16	13	1,930	64	122	618	97	55	29	16	9.9	6.4
6	14	13	2,230	59	108	446	247	53	27	16	9.5	6.4
7	13	14	650	59	100	332	238	59	25	16	9.2	6.4
8	12	14	435	55	94	235	205	66	25	16	8.8	6.4
9	11	104	765	52	87	198	175	54	53	15	8.5	6.0
10	11	700	628	49	80	188	144	50	48	15	8.5	6.0
11	10	230	565	54	74	185	131	47	52	14	8.5	6.0
12	9.8	118	622	117	70	232	276	44	39	14	8.1	6.0
13	9.6	505	586	93	76	367	250	42	33	13	7.8	6.0
14	9.4	307	570	77	80	229	188	40	31	13	7.8	6.0
15	10	156	562	66	87	178	155	39	28	13	7.8	6.0
16	11	102	396	59	78	146	129	55	27	12	8.5	6.0
17	10	76	293	57	71	124	114	83	25	12	8.5	6.0
18	9.6	61	227	139	68	116	104	66	24	12	8.1	6.0
19	10	50	176	338	74	101	97	54	23	12	8.1	6.4
20	14	43	144	182	175	91	90	50	23	13	8.1	6.7
21	15	38	130	4,740	124	90	84	56	22	13	8.1	6.7
22	11	34	265	7,740	466	223	80	56	22	13	7.8	7.4
23	15	33	265	2,330	730	223	84	50	22	12	7.4	7.4
24	16	56	345	944	872	342	133	46	21	12	7.4	7.1
25	15	60	349	765	554	360	104	43	19	12	7.1	6.7
26	13	833	237	554	1,130	256	88	41	19	12	7.1	18
27	14	509	176	430	715	203	80	38	19	12	7.1	17
28	14	633	137	353	1,560	170	77	37	18	12	7.1	11
29	13	834	122	286	848	146	70	35	18	11	7.1	8.5
30	14	516	109	232	------	129	65	33	17	11	7.1	8.1
31	18	------	100	195	------	120	------	33	------	10	6.4	------
TOTAL	469.4	6,112	14,499	20,408	9,016	18,766	3,939	1,560	831	417	255.2	222.2
MEAN	15.1	204	468	658	311	605	131	50.3	27.7	13.5	8.23	7.41
MAX	59	834	2,230	7,740	1,560	7,340	276	83	53	17	10	18
MIN	9.4	13	100	49	68	90	65	33	17	10	6.4	6.0
AC-FT	931	12,120	28,760	40,480	17,880	37,220	7,810	3,090	1,650	827	506	441

CAL YR 1971 TOTAL 64,033.2 MEAN 175 MAX 2,230 MIN 6.2 AC-FT 127,000
WTR YR 1972 TOTAL 76,494.8 MEAN 209 MAX 7,740 MIN 6.0 AC-FT 151,700

PEAK DISCHARGE (BASE, 3,000 CFS)

DATE	TIME	G.H.	DISCHARGE	DATE	TIME	G.H.	DISCHARGE
12-5	2245	10.34	6,500	3-2	2300	13.81	9,510
1-22	1000	14.08	9,720				

11482200 REDWOOD CREEK AT SOUTH PARK BOUNDARY, NEAR ORICK, CALIF.

LOCATION.--Lat 41°10'19", long 123°56'52", in SE¼NE¼ sec.16, T.9 N., R.2 E., Humboldt County, Redwood National Park (south boundary), on left bank 50 ft upstream from small right-bank tributary, 8.6 miles southeast of Orick, and 17 miles upstream from mouth.

DRAINAGE AREA.--183 sq mi.

PERIOD OF RECORD.--October 1970 to current year.

GAGE.--Water-stage recorder. Altitude of gage is 240 ft (from topographic map).

EXTREMES.--Current year: Maximum discharge, 32,600 cfs Mar. 2 (gage height, 29.36 ft), from rating curve extended as explained below; minimum daily, 14 cfs Sept. 13-19.
Period of record: Maximum discharge, 32,600 cfs Mar. 2, 1972 (gage height, 29.36 ft), from rating curve extended above 4,000 cfs on basis of runoff comparisons with upstream and downstream stations; minimum daily, 6.1 cfs Oct. 7-17, 1970.

REMARKS.--Records poor. No regulation or diversion above station. Records of chemical analyses and suspended-sediment discharge for the current year are published in Part 2 of this report.

DISCHARGE, IN CUBIC FEET PER SECOND, WATER YEAR OCTOBER 1971 TO SEPTEMBER 1972

DAY	OCT	NOV	DEC	JAN	FEB	MAR	APR	MAY	JUN	JUL	AUG	SEP
1	150	83	1,600	792	1,400	6,400	666	363	97	67	28	18
2	99	71	1,580	719	1,320	22,300	674	336	91	64	28	17
3	79	63	1,800	642	1,240	15,800	607	318	87	62	28	16
4	67	60	1,710	583	1,230	6,790	561	303	83	59	27	16
5	59	56	3,400	527	1,210	4,080	586	288	80	57	27	16
6	53	55	8,540	490	1,090	2,860	1,010	265	78	54	26	15
7	48	56	3,270	477	980	2,220	1,110	275	76	54	25	15
8	45	57	2,320	441	880	1,860	985	265	75	54	24	15
9	42	187	3,180	429	798	1,630	865	228	212	55	23	15
10	41	1,180	3,220	405	722	1,540	750	230	182	55	23	15
11	39	642	2,740	409	654	1,470	758	234	192	54	22	15
12	38	565	3,010	673	600	1,510	1,480	225	160	48	22	15
13	35	1,900	2,530	615	593	1,570	1,460	210	138	48	22	14
14	34	1,080	2,610	527	622	1,310	1,190	206	124	45	22	14
15	33	654	2,610	481	678	1,180	1,030	198	112	44	22	14
16	33	525	2,040	445	593	1,080	895	224	108	40	24	14
17	33	435	1,760	437	558	985	786	250	103	40	27	14
18	33	355	1,570	815	531	895	710	216	100	39	27	14
19	42	308	1,390	1,130	544	810	650	184	94	38	25	14
20	106	287	1,200	1,030	955	746	600	171	90	37	25	15
21	83	273	1,140	10,400	790	718	568	176	84	36	25	15
22	60	259	2,370	26,500	1,590	1,080	537	148	83	35	23	15
23	87	249	2,340	15,500	2,150	1,090	531	150	80	34	23	15
24	113	405	2,400	6,590	3,050	1,630	674	144	80	33	23	15
25	85	475	2,190	4,260	2,660	1,720	610	138	80	33	22	15
26	71	2,700	1,740	3,160	4,410	1,300	537	130	76	32	22	30
27	71	2,890	1,460	2,630	3,650	1,100	495	122	75	32	20	69
28	63	2,850	1,190	2,050	6,010	955	468	112	74	32	20	50
29	57	3,560	1,090	1,750	5,350	830	432	122	71	31	19	34
30	63	2,450	983	1,620	------	754	393	113	68	31	18	28
31	95	------	878	1,520	------	694	------	106	------	29	18	------
TOTAL	1,957	24,730	69,861	88,047	46,858	88,907	22,618	6,450	3,053	1,372	730	587
MEAN	63.1	824	2,254	2,840	1,616	2,868	754	208	102	44.3	23.5	19.6
MAX	150	3,560	8,540	26,500	6,010	22,300	1,480	363	212	67	28	69
MIN	33	55	878	405	531	694	393	106	68	29	18	14
AC-FT	3,880	49,050	138,600	174,600	92,940	176,300	44,860	12,790	6,060	2,720	1,450	1,160

CAL YR 1971 TOTAL 298,194 MEAN 817 MAX 10,500 MIN 18 AC-FT 591,500
WTR YR 1972 TOTAL 355,170 MEAN 970 MAX 26,500 MIN 14 AC-FT 704,500

PEAK DISCHARGE (BASE, 5,900, REVISED)

DATE	TIME	G.H.	DISCHARGE	DATE	TIME	G.H.	DISCHARGE
11-26	unknown	-	6,430	2-28	2230	16.40	7,300
12-6	do	-	13,900	3-2	2230	29.36	32,600
1-22	do	-	29,800				

NOTE.--No gage-height record Nov. 26 to Jan. 17, May 15 to June 14.

11482500 REDWOOD CREEK AT ORICK, CALIF.

LOCATION.--Lat 41°17'20", long 124°03'30", in NE¼ sec.4, T.10 N., R.1 E., Humboldt County, on left bank at upstream side of bridge on U.S. Highway 101 at Orick, 0.9 mile downstream from Prairie Creek.

DRAINAGE AREA.--278 sq mi.

PERIOD OF RECORD.--September 1911 to September 1913, October 1953 to current year. Monthly discharge only for some periods, published in WSP 1315-B.

GAGE.--Water-stage recorder. Datum of gage is 5.16 ft above mean sea level. Sept. 10, 1911, to Aug. 9, 1913, nonrecording gage at different datum.

AVERAGE DISCHARGE.--21 years, 1,089 cfs (789,000 acre-ft per year).

EXTREMES.--Current year: Maximum discharge, 49,700 cfs Mar. 3 (gage height, 23.67 ft); minimum daily, 16 cfs Sept. 16-18.
Period of record: Maximum discharge, 50,500 cfs Dec. 22, 1964 (gage height, 24.0 ft from outside high-water marks); minimum, 10 cfs Sept. 22-24, 1911.
Flood of Jan. 18, 1953, reached a stage of 23.95 ft, from floodmarks (discharge, 50,000 cfs).

REMARKS.--Records good. No regulation or diversion above station. Records of water temperatures and suspended-sediment discharge for the current year are published in Part 2 of this report.

REVISIONS (WATER YEARS).--WSP 1315-B: 1912-13.

DISCHARGE, IN CUBIC FEET PER SECOND, WATER YEAR OCTOBER 1971 TO SEPTEMBER 1972

DAY	OCT	NOV	DEC	JAN	FEB	MAR	APR	MAY	JUN	JUL	AUG	SEP
1	287	124	2,400	1,200	1,640	7,010	830	548	151	95	48	23
2	179	115	2,390	1,090	1,620	34,600	854	515	146	93	48	22
3	134	103	2,750	972	1,450	29,200	769	495	138	90	47	22
4	98	95	2,600	884	1,500	10,500	720	470	132	85	44	22
5	75	90	5,140	799	1,610	5,970	713	465	129	83	44	22
6	73	85	12,800	743	1,390	3,990	1,320	460	126	83	43	22
7	73	88	4,960	722	1,260	2,910	1,750	490	123	83	41	22
8	66	95	3,510	668	1,120	2,270	1,670	455	121	78	39	21
9	62	221	4,820	650	1,010	1,990	1,500	435	322	78	38	20
10	60	2,280	4,880	614	910	1,960	1,260	412	282	74	37	19
11	57	1,340	4,150	620	830	1,990	1,180	399	289	74	35	19
12	55	908	4,560	1,020	741	2,080	2,290	381	238	72	34	19
13	55	2,490	3,830	932	741	2,520	2,430	367	211	70	33	18
14	53	2,070	3,960	799	755	1,940	1,800	332	192	70	32	18
15	53	1,130	3,960	729	838	1,620	1,490	328	175	66	31	17
16	55	771	3,090	674	720	1,380	1,290	408	169	64	31	16
17	50	602	2,670	662	644	1,200	1,140	445	166	62	33	16
18	47	510	2,380	1,130	590	1,110	1,030	354	163	60	33	16
19	47	450	2,100	1,930	596	990	974	284	157	60	33	19
20	112	400	1,820	1,700	1,250	886	886	280	151	59	32	20
21	109	365	1,720	15,700	998	830	748	296	145	59	31	20
22	85	347	3,590	40,100	2,150	1,610	720	236	142	57	29	24
23	112	333	3,540	23,500	3,600	1,680	966	243	136	56	28	24
24	141	510	3,640	9,990	5,650	2,240	886	229	133	56	26	22
25	121	626	3,320	6,460	4,650	2,570	755	218	128	56	28	21
26	100	4,230	2,640	4,390	7,700	1,800	713	201	123	56	27	34
27	98	4,480	2,210	3,490	6,040	1,440	671	190	118	54	27	62
28	90	4,470	1,800	2,840	11,200	1,210	626	172	113	53	27	66
29	85	5,400	1,650	2,390	9,520	1,050	608	197	108	51	25	45
30	88	3,880	1,490	2,140	------	950	578	175	100	51	24	35
31	115	------	1,330	1,890	------	878	------	160	------	50	24	------
TOTAL	2,835	38,608	105,700	131,428	72,723	132,374	33,167	10,640	4,827	2,098	1,052	746
MEAN	91.5	1,287	3,410	4,240	2,508	4,270	1,106	343	161	67.7	33.9	24.9
MAX	287	5,400	12,800	40,100	11,200	34,600	2,430	548	322	95	48	66
MIN	47	85	1,330	614	590	830	578	160	100	50	24	16
AC-FT	5,620	76,580	209,700	260,700	144,200	262,600	65,790	21,100	9,570	4,160	2,090	1,480

CAL YR 1971 TOTAL 475,633 MEAN 1,303 MAX 16,200 MIN 20 AC-FT 943,400
WTR YR 1972 TOTAL 536,198 MEAN 1,465 MAX 40,100 MIN 16 AC-FT 1,064,000

PEAK DISCHARGE (BASE, 9,000 CFS)

DATE	TIME	G.H.	DISCHARGE	DATE	TIME	G.H.	DISCHARGE
11-26	2000	12.44	9,750	2-28	0945	12.60	12,400
12-6	0345	15.74	20,100	3-3	0045	23.67	49,700
1-22	1430	22.57	45,300				

11489500 ANTELOPE CREEK NEAR TENNANT, CALIF.

LOCATION.--Lat 41°32'48", long 121°55'02", in NW¼ sec.25, T.43 N., R.1 W., Siskiyou County, Shasta National Forest, on right bank 2.5 miles south of Tennant, 4 miles downstream from Frog Lake, and 17 miles southeast of town of Mount Hebron.

DRAINAGE AREA.--18.6 sq mi.

PERIOD OF RECORD.--May 1952 to current year.

GAGE.--Water-stage recorder and concrete control. Altitude of gage is 5,080 ft (from topographic map).

AVERAGE DISCHARGE.--20 years, 36.6 cfs (26,520 acre-ft per year).

EXTREMES.--Current year: Maximum discharge, 161 cfs Apr. 5 (gage height, 2.71 ft); maximum gage height, 3.08 ft Dec. 25 (backwater from ice); minimum daily discharge, 11 cfs on many days.
Period of record: Maximum discharge, 1,170 cfs Jan. 23, 1970 (gage height, 4.93 ft), from rating curve extended above 240 cfs on basis of slope-area measurement at gage height 4.00 ft; minimum daily, 3.6 cfs Jan. 5, 1960.

REMARKS.--Records excellent except those for the winter period, which are fair. No storage or diversion above station.

REVISIONS.--WSP 1929: Drainage area.

DISCHARGE, IN CUBIC FEET PER SECOND, WATER YEAR OCTOBER 1971 TO SEPTEMBER 1972

DAY	OCT	NOV	DEC	JAN	FEB	MAR	APR	MAY	JUN	JUL	AUG	SEP
1	16	12	14	12	12	31	42	45	84	26	14	11
2	16	12	14	12	12	34	45	48	79	25	14	11
3	16	12	14	11	15	44	46	51	74	24	14	11
4	15	13	14	11	18	38	52	54	69	24	14	12
5	15	13	15	11	21	37	123	60	68	21	13	13
6	14	13	15	11	25	36	100	65	70	21	13	12
7	14	13	15	12	18	35	77	72	71	21	13	12
8	14	13	15	12	14	36	68	67	65	20	13	11
9	14	14	15	13	14	44	61	61	62	20	13	11
10	14	18	15	13	14	54	58	60	59	20	13	11
11	14	25	14	13	14	60	55	60	51	19	13	12
12	14	22	14	14	14	58	51	62	46	19	13	12
13	13	19	14	14	14	68	48	67	43	18	13	12
14	13	17	14	14	14	60	48	75	44	18	13	11
15	14	16	14	14	14	58	49	81	44	17	13	11
16	14	14	14	14	14	59	47	86	44	17	14	11
17	14	13	14	14	14	62	44	85	42	17	14	11
18	14	13	14	14	15	67	41	74	41	16	14	11
19	13	13	14	15	15	61	40	71	40	16	13	11
20	13	13	14	15	23	58	40	89	38	16	13	11
21	13	13	15	16	20	59	42	69	38	16	13	11
22	13	13	16	21	16	87	42	63	36	16	13	11
23	13	14	15	21	16	64	43	63	35	16	13	11
24	13	14	15	21	15	58	44	63	33	15	12	11
25	13	14	15	19	15	53	41	63	31	15	12	11
26	12	14	14	18	16	49	42	64	30	15	12	13
27	12	14	14	17	23	46	44	69	29	15	11	13
28	12	14	13	16	57	44	47	77	29	15	11	12
29	12	14	13	15	41	42	44	89	28	15	12	12
30	12	14	13	14	------	42	44	92	27	15	12	11
31	12	------	12	13	------	41	------	91	------	14	11	------
TOTAL	421	436	441	450	533	1,585	1,568	2,136	1,450	562	399	344
MEAN	13.6	14.5	14.2	14.5	18.4	51.1	52.3	68.9	48.3	18.1	12.9	11.5
MAX	16	25	16	21	57	87	123	92	84	26	14	13
MIN	12	12	12	11	12	31	40	45	27	14	11	11
AC-FT	835	865	875	893	1,060	3,140	3,110	4,240	2,880	1,110	791	682

CAL YR 1971 TOTAL 12,907 MEAN 35.4 MAX 188 MIN 12 AC-FT 25,600
WTR YR 1972 TOTAL 10,325 MEAN 28.2 MAX 123 MIN 11 AC-FT 20,480

PEAK DISCHARGE (BASE, 100 CFS)

DATE	TIME	G.H.	DISCHARGE	DATE	TIME	G.H.	DISCHARGE
3-22	0830	2.47	119	5-16	2130	2.39	107
4-5	1900	2.71	161	5-30	2200	2.35	101

11510700 KLAMATH RIVER BELOW JOHN C. BOYLE POWERPLANT, NEAR KENO, OREG.

LOCATION.--Lat 42°05'05", long 122°04'20", in SE¼SE¼ sec.14, T.40 S., R.6 E., Klamath County, on right bank 0.7 mile downstream from John C. Boyle powerplant, 8 miles downstream from Spencer Creek, and 8.5 miles southwest of Keno.

DRAINAGE AREA.--4,080 sq mi, approximately (not including Lost River or Lower Klamath Lake basins).

PERIOD OF RECORD.--January 1959 to current year. Prior to Oct. 1, 1961, published as "below Big Bend powerplant."

GAGE.--Water-stage recorder. Datum of gage is 3,274.82 ft above mean sea level (levels by Pacific Power and Light Co.).

AVERAGE DISCHARGE.--12 years, 1,815 cfs (1,315,000 acre-ft per year).

EXTREMES.--Current year: Maximum discharge, 9,270 cfs Mar. 27 (gage height, 8.66 ft); minimum, 327 cfs Oct. 10; minimum daily, 374 cfs Aug. 7.
Period of record: Maximum discharge, 11,000 cfs Mar. 5, 1972 (gage height, 9.33 ft); minimum, 283 cfs Feb. 17, 1968; minimum daily, 317 cfs July 25, 1968.

REMARKS.--Records excellent. Flow regulated by Upper Klamath Lake (see sta 11507000). Large diurnal fluctuation caused by John C. Boyle powerplant and 2 powerplants below Upper Klamath Lake. Large diversions for irrigation above station.

DISCHARGE, IN CUBIC FEET PER SECOND, WATER YEAR OCTOBER 1971 TO SEPTEMBER 1972

DAY	OCT	NOV	DEC	JAN	FEB	MAR	APR	MAY	JUN	JUL	AUG	SEP
1	1,540	2,780	3,280	3,170	3,190	6,050	4,880	1,510	907	395	662	1,240
2	1,530	2,770	3,250	3,170	3,100	7,760	4,920	1,520	759	395	706	1,510
3	1,530	2,780	3,310	3,170	3,040	9,620	4,640	1,450	395	526	684	1,490
4	827	2,840	3,310	3,170	2,820	10,200	4,210	1,200	391	391	706	1,200
5	2,700	2,780	3,350	3,170	2,670	10,800	3,810	1,150	796	861	700	1,500
6	2,710	2,770	3,350	3,170	2,660	10,700	3,110	609	797	736	667	1,200
7	2,750	2,780	3,370	3,170	2,660	10,400	2,380	839	672	775	724	1,200
8	1,800	2,780	3,610	3,170	2,660	10,100	1,770	1,510	608	391	730	1,520
9	2,800	2,780	3,790	3,170	2,640	9,760	1,790	1,540	602	391	802	1,560
10	2,800	2,770	3,760	2,870	2,640	9,390	1,790	1,870	599	708	846	1,560
11	2,800	2,780	3,760	2,540	2,640	9,760	1,880	2,130	606	580	941	1,780
12	2,800	2,780	3,760	3,140	2,640	9,850	2,340	2,400	599	572	906	1,990
13	2,800	2,780	3,710	3,140	2,640	9,820	2,380	2,610	572	563	934	1,980
14	2,800	2,770	3,760	3,140	2,640	9,760	2,510	2,600	569	582	934	2,040
15	2,780	2,780	3,740	3,140	2,640	9,670	3,050	2,630	572	391	948	2,340
16	2,800	2,810	3,730	3,140	2,640	9,560	3,110	2,630	572	415	999	1,670
17	2,800	2,770	3,490	3,070	2,640	9,280	3,100	2,390	572	687	930	1,910
18	2,800	2,770	3,190	3,110	2,640	9,110	3,120	2,230	577	571	936	2,600
19	2,800	2,770	3,070	3,110	2,640	8,190	3,360	2,040	572	395	846	2,180
20	2,780	2,770	3,070	3,070	2,640	8,300	3,290	1,990	526	630	748	2,010
21	2,780	2,770	3,070	3,070	2,640	8,130	3,020	2,000	572	593	1,070	1,790
22	2,800	2,770	3,080	3,790	2,640	7,920	3,080	2,170	572	447	1,070	2,040
23	2,800	2,780	3,130	5,840	2,660	8,410	3,060	2,350	572	451	1,070	1,480
24	2,780	2,780	3,130	5,450	2,660	7,860	2,990	2,550	395	812	976	1,480
25	2,780	2,770	3,190	4,320	2,660	7,920	2,740	2,780	395	559	1,030	1,750
26	2,780	2,770	3,170	3,920	2,660	8,220	2,810	2,810	610	414	892	1,620
27	2,800	2,780	3,170	3,740	2,660	8,050	2,610	2,850	616	435	754	1,620
28	2,780	2,770	3,170	3,170	3,630	7,400	2,590	2,850	572	550	1,280	1,800
29	2,780	3,010	3,170	3,170	5,410	7,060	2,720	2,590	569	532	1,410	1,800
30	2,800	3,400	3,170	3,170	------	6,410	1,620	2,020	662	532	415	1,800
31	2,780	------	3,170	3,250	------	5,960	------	1,310	------	555	391	------
TOTAL	79,607	84,210	104,280	104,890	82,100	271,420	88,680	63,128	17,798	16,835	26,707	51,660
MEAN	2,568	2,807	3,364	3,384	2,831	8,755	2,956	2,036	593	543	862	1,722
MAX	2,800	3,400	3,790	5,840	5,410	10,800	4,920	2,850	907	861	1,410	2,600
MIN	827	2,770	3,070	2,540	2,640	5,960	1,620	609	391	391	391	1,200
AC-FT	157,900	167,000	206,800	208,000	162,800	538,400	175,900	125,200	35,300	33,390	52,970	102,500

CAL YR 1971 TOTAL 986,299 MEAN 2,702 MAX 8,510 MIN 374 AC-FT 1,956,000
WTR YR 1972 TOTAL 991,315 MEAN 2,709 MAX 10,800 MIN 391 AC-FT 1,966,000

NOTE.--No gage-height record Oct. 16-19, Sept. 28-30.

RESERVOIRS IN KLAMATH RIVER BASIN, CALIF.

11511400 COPCO LAKE NEAR COPCO.--Lat 41°58'46", long 122°20'00", on east edge of SW¼, sec.29, T.48 N., R.4 W., Siskiyou County, 12.7 miles northeast of Hornbrook. Drainage area, 4,300 sq mi. Period of record, October 1967 to current year. Gage is a pressure device and telemark read once daily. Datum of gage is at mean sea level (levels by Pacific Power and Light Co.). Extremes for current year: Maximum contents, 45,577 acre-ft Sept. 19 (elevation, 2,606.19 ft); minimum, 32,956 acre-ft Aug. 12 (elevation, 2,592.37 ft). Extremes for period of record: Maximum contents, 46,818 acre-ft June 24, 1969 (elevation, 2,607.45 ft); minimum, 30,360 acre-ft Aug. 19, 1971 (elevation, 2,589.24 ft).

Reservoir is formed by gravity-type dam completed in 1922. Normal capacity at elevation 2,607.5 ft is 46,867 acre-ft. Records, including extremes, represent contents at 0800 hours. Records of contents furnished by Pacific Power and Light Co.

11516510 IRON GATE RESERVOIR NEAR HORNBROOK.--Lat 41°55'58", long 122°26'06", in SW¼ sec.9, T.47 N., R.5 W., Siskiyou County, 6.6 miles northeast of Hornbrook. Drainage area, 4,573 sq mi. Period of record, October 1967 to current year. Gage is a pressure device and telemark read once daily. Datum of gage is at mean sea level (levels by Pacific Power and Light Co.). Extremes for current year: Maximum contents, 61,776 acre-ft Mar. 3 (elevation, 2,330.96 ft); minimum, 50,772 acre-ft Sept. 19 (elevation, 2,319.20 ft). Extremes for period of record: Maximum contents, 61,776 acre-ft Mar. 3, 1972 (elevation, 2,330.96 ft); minimum, 50,103 acre-ft Dec. 9, 1968 (elevation, 2,318.40 ft).

Reservoir is formed by earthfill and rockfill dam completed in 1962. Capacity is 58,794 acre-ft at elevation 2,328.0 ft (crest of spillway). Records, including extremes, represent contents at 0800 hours. Records of contents furnished by Pacific Power and Light Co.

MONTHEND ELEVATION AND CONTENTS, WATER YEAR OCTOBER 1971 TO SEPTEMBER 1972

Date	Elevation (feet)a	Contents (acre-feet)	Change in contents (acre-feet)	Elevation (feet)a	Contents (acre-feet)	Change in contents (acre-feet)
	Copco Lake			Iron Gate Reservoir		
Oct. 31	2,602.63	42,158	+2,201	2,328.53	59,319	+2,251
Nov. 30	2,601.82	41,397	-761	2,328.55	59,338	+19
Dec. 31	2,603.77	43,239	+1,842	2,328.59	59,378	+40
CAL YR 1971	-	-	-1,084	-	-	+79
Jan. 31	2,603.87	43,334	+95	2,328.75	59,536	+158
Feb. 29	2,604.05	43,506	+172	2,329.74	60,531	+995
Mar. 31	2,601.15	40,772	-2,734	2,329.55	60,340	-191
Apr. 30	2,605.09	44,506	+3,734	2,328.53	59,319	-1,021
May 31	2,602.49	42,027	-2,479	2,327.93	58,726	-593
June 30	2,604.35	43,794	+1,767	2,325.05	55,975	-2,751
July 31	2,600.10	39,800	-3,994	2,324.46	55,429	-546
Aug. 31	2,595.28	35,466	-4,334	2,322.95	54,049	-1,380
Sept. 30	2,603.97	43,429	+7,963	2,324.44	55,411	+1,362
WTR YR 1972	-	-	+3,472	-	-	-1,657

a Elevation at 0800.

11516530 KLAMATH RIVER BELOW IRON GATE DAM, CALIF.

LOCATION.--Lat 41°55'41", long 122°26'35", in SE¼NE¼ sec.17, T.47 N., R.5 W., Siskiyou County, on left bank 0.1 mile downstream from Bogus Creek, 0.6 mile downstream from Iron Gate Dam, and 5.9 miles northeast of Hornbrook.

DRAINAGE AREA.--4,630 sq mi, approximately (not including Lost River and Lower Klamath Lake basins).

PERIOD OF RECORD.--October 1960 to current year.

GAGE.--Water-stage recorder. Datum of gage is 2,162.44 ft above mean sea level (levels by Pacific Power and Light Co.).

AVERAGE DISCHARGE.--12 years, 2,286 cfs (1,656,000 acre-ft per year).

EXTREMES.--Current year: Maximum discharge, 17,000 cfs Mar. 3 (gage height, 10.83 ft); minimum daily, 690 cfs July 5.
Period of record: Maximum discharge, 29,400 cfs Dec. 22, 1964 (gage height, 13.63 ft), from rating curve extended above 15,000 cfs on basis of slope-area measurement of maximum flow; minimum daily, 647 cfs Nov. 6, 1960, Sept. 24, Oct. 1, 1961.

REMARKS.--Records excellent. Flow regulated by Upper Klamath Lake (capacity, 584,000 acre-ft), other smaller reservoirs, and diversions above station. Iron Gate Dam 0.6 mile upstream is a re-regulating reservoir (see sta 11516510). Records of chemical analyses and water temperatures for the current year are published in Part 2 of this report.

DISCHARGE, IN CUBIC FEET PER SECOND, WATER YEAR OCTOBER 1971 TO SEPTEMBER 1972

DAY	OCT	NOV	DEC	JAN	FEB	MAR	APR	MAY	JUN	JUL	AUG	SEP
1	1,720	3,230	3,440	3,390	3,470	7,200	5,880	2,530	1,040	694	1,070	1,330
2	1,720	3,110	3,470	3,390	3,440	12,700	5,780	1,960	785	694	1,070	1,330
3	1,720	3,100	3,560	3,350	3,380	16,200	5,350	1,840	782	694	1,070	1,330
4	1,720	3,100	3,790	3,230	3,300	15,600	4,620	1,760	782	694	1,060	1,330
5	1,740	3,080	3,950	3,230	3,310	14,700	4,460	1,660	785	690	1,010	1,340
6	1,820	3,110	4,310	3,220	3,350	13,900	3,880	1,660	789	701	1,020	1,330
7	1,820	3,110	4,060	3,110	3,430	13,000	3,250	1,670	813	718	1,030	1,330
8	2,020	3,110	4,060	2,890	3,550	12,500	2,880	1,740	797	718	1,030	1,420
9	2,810	3,100	4,230	2,890	3,370	12,000	2,850	1,820	805	718	1,030	1,540
10	2,840	3,140	4,230	2,920	3,310	11,200	2,830	1,820	809	726	1,030	1,540
11	2,840	3,140	4,220	3,070	3,310	11,400	2,820	1,820	797	732	1,030	1,590
12	2,830	3,120	4,220	3,170	3,300	11,700	2,910	1,870	793	726	1,030	1,760
13	2,870	3,160	4,300	3,310	3,260	11,700	3,130	3,170	789	726	1,030	1,770
14	2,950	3,130	4,370	3,220	3,250	11,600	3,500	3,350	789	726	1,030	1,780
15	3,000	3,140	4,330	3,130	3,420	11,300	3,670	3,210	789	726	1,020	1,780
16	3,050	3,110	4,280	3,130	3,460	11,100	3,670	2,870	789	726	1,030	1,780
17	3,060	3,110	4,090	3,160	3,470	10,900	3,690	2,670	789	718	1,020	1,780
18	3,070	3,100	3,610	3,280	3,460	10,600	3,680	2,670	789	718	1,020	1,760
19	3,050	3,100	3,400	3,380	3,420	9,970	3,690	2,390	785	718	1,020	1,750
20	3,080	3,120	3,410	3,400	3,540	9,080	3,710	2,340	832	726	1,020	1,770
21	3,080	3,140	3,410	5,310	3,480	9,340	3,500	2,370	778	729	1,010	1,780
22	3,240	3,110	3,440	10,000	3,570	9,630	3,330	2,480	789	729	1,020	1,780
23	3,300	3,100	3,430	10,300	3,550	9,730	3,360	2,740	797	726	1,010	1,780
24	3,270	3,130	3,480	7,380	3,550	9,390	3,390	2,740	797	718	1,020	1,780
25	3,260	3,140	3,500	5,830	3,510	9,010	3,290	2,800	789	726	1,010	1,780
26	3,280	3,240	3,450	4,460	3,570	9,060	3,270	2,970	755	726	1,010	1,790
27	3,240	3,300	3,440	4,110	3,780	9,010	3,240	3,390	694	726	1,010	1,790
28	3,230	3,320	3,400	4,200	5,210	8,430	3,210	3,480	694	726	1,030	1,790
29	3,230	3,350	3,410	3,910	7,550	7,830	3,200	3,380	694	726	1,030	1,790
30	3,240	3,320	3,400	3,980	------	7,380	3,200	2,780	694	726	1,030	1,790
31	3,240	------	3,390	3,740	------	7,050	------	1,900	------	729	1,040	------
TOTAL	85,340	94,570	117,080	127,090	105,570	334,210	109,240	75,850	23,609	22,276	31,890	49,190
MEAN	2,753	3,152	3,777	4,100	3,640	10,780	3,641	2,447	787	719	1,029	1,640
MAX	3,300	3,350	4,370	10,300	7,550	16,200	5,880	3,480	1,040	732	1,070	1,790
MIN	1,720	3,080	3,390	2,890	3,250	7,050	2,820	1,660	694	690	1,010	1,330
AC-FT	169,300	187,600	232,200	252,100	209,400	662,900	216,700	150,400	46,830	44,180	63,250	97,570

CAL YR 1971 TOTAL 1,196,367 MEAN 3,278 MAX 10,600 MIN 709 AC-FT 2,373,000
WTR YR 1972 TOTAL 1,175,915 MEAN 3,213 MAX 16,200 MIN 690 AC-FT 2,332,000

11516900 LITTLE SHASTA RIVER NEAR MONTAGUE, CALIF.

LOCATION.--Lat 41°45'11", long 122°17'42", in NW¼NW¼ sec.15, T.45 N., R.4 W., Siskiyou County, on right bank 0.5 mile downstream from Dry Creek, and 12 miles east of Montague.

DRAINAGE AREA.--48.2 sq mi.

PERIOD OF RECORD.--October 1957 to current year.

GAGE.--Water-stage recorder. Altitude of gage is 3,360 ft (from topographic map). Prior to May 27, 1965, water-stage recorder at site 0.2 mile downstream at different datum.

AVERAGE DISCHARGE.--15 years, 19.9 cfs (14,420 acre-ft per year).

EXTREMES.--Current year: Maximum discharge, 365 cfs Mar. 3 (gage height, 3.76 ft); minimum daily, 6.5 cfs Nov. 23.
Period of record: Maximum discharge, 5,910 cfs Dec. 22, 1964 (gage height, 12.2 ft, present site and datum), from slope-area measurement of maximum flow; minimum daily, 0.60 cfs Jan. 4, 1966.

REMARKS.--No known diversion or regulation above station.

COOPERATION.--Records furnished by California Department of Water Resources and reviewed by Geological Survey.

DISCHARGE, IN CUBIC FEET PER SECOND, WATER YEAR OCTOBER 1971 TO SEPTEMBER 1972

DAY	OCT	NOV	DEC	JAN	FEB	MAR	APR	MAY	JUN	JUL	AUG	SEP
1	9.5	8.9	8.2	8.9	37	170	74	58	57	22	13	8.5
2	9.5	8.5	8.2	8.9	32	224	118	62	55	21	12	8.4
3	9.0	8.2	7.5	8.5	29	300	92	66	53	20	12	8.8
4	8.4	8.2	7.2	8.5	25	250	85	73	51	20	12	9.2
5	7.7	8.2	21	8.2	21	209	89	80	50	19	12	10
6	7.5	7.5	40	8.2	18	165	82	81	49	19	11	9.6
7	7.5	7.1	16	7.8	15	161	75	79	48	18	11	8.6
8	7.5	7.1	14	7.8	18	140	74	76	47	18	11	8.2
9	7.5	7.1	12	7.5	21	131	68	74	51	18	11	8.1
10	7.5	7.8	9.7	7.1	25	125	64	75	51	17	11	8.5
11	7.5	8.2	9.3	7.1	29	120	68	76	48	17	11	8.5
12	7.5	7.8	8.9	8.2	34	115	62	79	44	16	10	8.5
13	7.5	7.5	8.9	8.9	43	110	66	82	41	16	11	8.3
14	7.5	7.5	8.9	9.7	43	105	68	83	39	16	11	8.0
15	7.5	6.8	8.2	11	46	104	71	83	37	16	11	7.9
16	7.5	7.1	8.2	11	51	107	65	86	37	15	12	7.8
17	7.5	7.1	8.2	11	58	110	57	90	35	15	11	7.8
18	7.8	7.1	8.5	23	54	108	52	81	33	15	10	7.7
19	7.8	6.8	8.9	34	55	100	50	80	32	15	10	8.0
20	8.2	7.2	8.9	42	72	94	49	94	31	15	10	8.1
21	8.2	7.1	8.9	156	65	91	51	84	29	15	10	8.1
22	7.8	6.8	8.9	291	55	108	51	77	28	14	10	8.0
23	10	6.5	9.3	163	51	107	50	74	27	14	10	8.0
24	8.9	8.2	11	95	51	104	52	71	27	14	9.9	8.0
25	8.5	7.5	11	72	48	92	48	68	26	14	9.6	8.1
26	11	17	11	68	56	82	48	66	25	13	9.4	10
27	11	17	10	62	80	75	54	64	24	13	9.2	9.9
28	7.8	13	9.7	57	110	71	57	63	24	13	9.1	8.0
29	8.5	11	9.3	51	140	66	52	62	23	13	9.1	7.7
30	8.5	11	8.9	46	------	63	54	61	23	13	9.1	7.5
31	7.8	------	8.9	41	------	61	------	59	------	12	8.9	------
TOTAL	255.9	256.8	337.6	1,349.3	1,382	3,868	1,946	2,307	1,145	496	327.3	251.8
MEAN	8.25	8.56	10.9	43.5	47.7	125	64.9	74.4	38.2	16.0	10.6	8.39
MAX	11	17	40	291	140	300	118	94	57	22	13	10
MIN	7.5	6.5	7.2	7.1	15	61	48	58	23	12	8.9	7.5
AC-FT	508	509	670	2,680	2,740	7,670	3,860	4,580	2,270	984	649	499

CAL YR 1971 TOTAL 12,418.4 MEAN 34.0 MAX 179 MIN 5.9 AC-FT 24,630
WTR YR 1972 TOTAL 13,922.7 MEAN 38.0 MAX 300 MIN 6.5 AC-FT 27,620

NOTE.--No gage-height record Feb. 26 to Mar. 14.

11517500 SHASTA RIVER NEAR YREKA, CALIF.

LOCATION.--Lat 41°49'23", long 122°35'40", in SE¼NE¼ sec.24, T.46 N., R.7 W., Siskiyou County, on right bank 0.5 mile upstream from mouth, and 7 miles north of Yreka.

DRAINAGE AREA.--793 sq mi.

PERIOD OF RECORD.--October 1933 to December 1941, December 1944 to current year.

GAGE.--Water-stage recorder. Altitude of gage is 2,000 ft (from topographic map). Prior to Nov. 2, 1933, nonrecording gage at same site and datum.

AVERAGE DISCHARGE.--35 years, 185 cfs (134,000 acre-ft per year).

EXTREMES.--Current year: Maximum discharge, 2,700 cfs Mar. 3 (gage height, 6.92 ft); minimum daily, 15 cfs July 20.
Period of record: Maximum discharge, 21,500 cfs Dec. 22, 1964 (gage height, 12.92 ft in gage well, 13.85 ft, from floodmarks), from rating curve extended above 4,100 cfs on basis of slope-area measurement of maximum flow; minimum, 3.4 cfs Aug. 13, 1939, when about 2 cfs was being diverted around gage.

REMARKS.--Records fair. Flow partly regulated by Lake Dwinnell beginning in 1928; storage limited to 50,000 acre-ft. Many diversions above station for irrigation. Records of chemical analyses and water temperatures for the current year are published in Part 2 of this report.

REVISIONS.--WSP 1929: Drainage area.

DISCHARGE, IN CUBIC FEET PER SECOND, WATER YEAR OCTOBER 1971 TO SEPTEMBER 1972

DAY	OCT	NOV	DEC	JAN	FEB	MAR	APR	MAY	JUN	JUL	AUG	SEP
1	164	197	233	228	314	699	305	92	120	29	18	30
2	175	195	236	220	293	1,460	415	84	104	31	16	51
3	182	194	254	214	284	2,280	418	83	83	47	16	42
4	183	199	242	206	293	1,420	360	85	78	43	20	57
5	186	196	244	204	305	1,080	343	94	77	30	22	64
6	187	194	283	205	305	843	367	93	69	25	20	54
7	184	194	260	205	293	725	360	118	77	30	22	44
8	181	196	242	206	266	637	331	152	85	32	30	38
9	180	194	246	205	283	579	315	143	79	25	31	36
10	180	210	247	206	281	543	293	119	130	32	33	39
11	179	250	244	209	280	543	266	99	149	24	34	51
12	185	262	246	222	279	520	283	99	140	29	34	45
13	182	263	242	234	276	512	291	96	124	24	28	48
14	176	240	238	235	281	485	284	98	117	23	23	55
15	174	210	237	222	287	459	260	105	90	17	26	62
16	199	203	230	219	293	432	248	100	81	16	82	64
17	195	192	224	221	289	428	216	111	80	21	78	62
18	186	192	223	225	289	428	192	126	77	16	45	69
19	179	192	221	238	283	402	181	122	72	16	49	76
20	182	192	219	242	288	381	147	134	64	15	40	78
21	197	196	218	382	305	360	142	302	60	21	40	88
22	205	196	234	1,570	302	406	136	300	55	23	33	126
23	209	197	246	1,600	329	547	112	252	54	23	27	135
24	219	199	256	1,120	352	490	105	196	50	21	39	135
25	210	197	289	758	323	419	126	186	51	37	42	132
26	204	220	294	561	310	385	125	168	45	32	42	135
27	204	279	253	450	346	360	97	154	45	42	28	183
28	203	285	241	402	617	347	85	142	44	36	26	149
29	197	266	236	356	907	335	88	124	38	29	21	137
30	200	239	237	330	------	309	82	129	32	28	20	143
31	203	------	233	322	------	297	------	126	------	29	23	------
TOTAL	5,890	6,439	7,548	12,217	9,553	19,111	6,973	4,232	2,370	846	1,008	2,428
MEAN	190	215	243	394	329	616	232	137	79.0	27.3	32.5	80.9
MAX	219	285	294	1,600	907	2,280	418	302	149	47	82	183
MIN	164	192	218	204	266	297	82	83	32	15	16	30
AC-FT	11,680	12,770	14,970	24,230	18,950	37,910	13,830	8,390	4,700	1,680	2,000	4,820

CAL YR 1971 TOTAL 89,832 MEAN 246 MAX 1,300 MIN 18 AC-FT 178,200
WTR YR 1972 TOTAL 78,615 MEAN 215 MAX 2,280 MIN 15 AC-FT 155,900

PEAK DISCHARGE (BASE, 400 CFS).--Jan. 22 (2230) 1,940 cfs (6.28 ft); Mar. 3 (0630) 2,700 cfs (6.92 ft).

11517900 EAST FORK SCOTT RIVER BELOW HOUSTON CREEK, NEAR CALLAHAN, CALIF.

LOCATION.--Lat 41°24'06", long 122°39'08", in SE¼NE¼ sec.16, T.41 N., R.7 W., Siskiyou County, on right bank 1,200 ft downstream from Houston Creek, and 9.9 miles northeast of Callahan.

DRAINAGE AREA.--19.7 sq mi.

PERIOD OF RECORD.--September 1970 to current year.

GAGE.--Water-stage recorder. Datum of gage is 4,170.84 ft above mean sea level.

EXTREMES.--Current year: Maximum discharge, 146 cfs Jan. 22 (gage height, 3.01 ft); minimum daily, 2.1 cfs Oct. 8-14.
Period of record: Maximum discharge, 222 cfs Jan. 18, 1971 (gage height, 3.40 ft); minimum daily, 1.2 cfs Sept. 28-30, Oct. 1-3, 1970.

REMARKS.--Records good. Some diversion for irrigation.

DISCHARGE, IN CUBIC FEET PER SECOND, WATER YEAR OCTOBER 1971 TO SEPTEMBER 1972

DAY	OCT	NOV	DEC	JAN	FEB	MAR	APR	MAY	JUN	JUL	AUG	SEP
1	3.8	2.4	5.4	4.5	10	44	24	34	56	10	3.8	2.5
2	3.8	2.2	5.8	4.5	10	66	30	40	51	11	3.8	2.7
3	3.5	2.9	5.4	3.5	12	100	35	47	48	11	3.8	2.7
4	3.2	2.9	5.4	3.5	12	75	48	51	44	11	3.8	2.7
5	2.6	2.9	6.6	4.5	12	67	95	56	43	10	3.8	3.0
6	2.3	2.6	10	5.0	11	61	79	57	43	10	3.4	2.7
7	2.3	2.9	7.0	5.0	10	54	59	53	46	9.5	3.4	2.7
8	2.1	2.9	7.0	4.5	10	52	50	44	47	9.0	3.4	2.5
9	2.1	4.2	7.0	4.5	10	63	43	40	49	9.0	3.2	2.5
10	2.1	6.2	6.2	4.5	10	61	37	40	45	8.6	3.2	2.5
11	2.1	11	5.5	4.6	10	54	35	42	34	8.2	3.2	2.5
12	2.1	8.2	6.2	5.0	10	54	31	49	28	7.8	3.2	2.5
13	2.1	6.2	6.2	5.0	10	61	29	57	25	7.4	3.2	2.5
14	2.1	5.4	5.8	5.0	10	54	28	65	25	7.4	3.2	2.5
15	2.6	4.6	5.0	5.0	10	52	28	65	24	7.0	3.4	2.3
16	3.2	4.2	4.5	5.4	11	60	28	61	24	7.0	4.2	2.3
17	3.2	4.2	5.0	5.4	11	68	27	53	23	6.6	3.8	2.3
18	3.2	4.2	5.0	7.0	11	68	26	45	21	6.2	3.4	2.5
19	3.5	4.2	4.6	10	13	56	24	43	20	6.2	3.2	2.5
20	3.5	4.2	4.4	12	15	49	24	49	20	6.2	3.2	2.7
21	3.5	4.2	4.0	40	15	47	24	43	19	6.2	3.2	2.7
22	3.2	4.2	5.8	116	15	60	26	39	18	5.8	3.2	2.7
23	3.8	4.2	5.4	76	14	45	26	40	16	5.4	3.0	2.7
24	3.8	4.6	5.8	41	13	40	28	42	16	5.4	3.0	2.7
25	3.5	4.6	5.0	25	13	34	26	45	15	5.0	3.0	3.0
26	3.5	9.0	4.6	18	14	30	26	49	14	4.6	2.7	3.2
27	3.8	8.6	4.2	15	22	27	28	53	14	4.6	2.7	3.8
28	2.9	8.6	3.5	14	50	25	34	58	14	4.6	2.5	3.2
29	2.3	7.0	4.0	10	57	23	30	63	12	4.2	2.5	2.7
30	2.6	6.2	4.5	8.0	------	22	30	61	11	4.2	2.5	2.5
31	2.6	------	4.5	10	------	22	------	59	------	3.8	2.5	------
TOTAL	90.9	149.7	169.3	481.4	431	1,594	1,058	1,543	865	222.9	100.4	80.3
MEAN	2.93	4.99	5.46	15.5	14.9	51.4	35.3	49.8	28.8	7.19	3.24	2.68
MAX	3.8	11	10	116	57	100	95	65	56	11	4.2	3.8
MIN	2.1	2.2	3.5	3.5	10	22	24	34	11	3.8	2.5	2.3
AC-FT	180	297	336	955	855	3,160	2,100	3,060	1,720	442	199	159

CAL YR 1971 TOTAL 9,157.3 MEAN 25.1 MAX 210 MIN 2.1 AC-FT 18,160
WTR YR 1972 TOTAL 6,785.9 MEAN 18.5 MAX 116 MIN 2.1 AC-FT 13,460

PEAK DISCHARGE (BASE, 100 CFS)

DATE	TIME	G.H.	DISCHARGE	DATE	TIME	G.H.	DISCHARGE
1-22	2100	3.01	146	4-5	1200	2.81	111
3-3	2300	2.91	127				

11517950 EAST FORK SCOTT RIVER ABOVE KANGAROO CREEK, NEAR CALLAHAN, CALIF.

LOCATION.--Lat 41°20'22", long 122°43'07", in SE¼SW¼ sec.7, T.40 N., R.7 W., Siskiyou County, on left bank 1,500 ft upstream from Kangaroo Creek, and 4.7 miles northeast of Callahan.

DRAINAGE AREA.--49.5 sq mi.

RECORDS AVAILABLE.--September 1970 to current year.

GAGE.--Water-stage recorder. Altitude of gage is 3,580 ft (from topographic map).

EXTREMES.--Current year: Maximum discharge, 558 cfs Jan. 22 (gage height, 6.18 ft); minimum daily, 0.50 cfs Sept. 8-11.
Period of record: Maximum discharge, 558 cfs Jan. 22, 1972 (gage height, 6.18 ft); minimum daily, 0.48 cfs Sept. 1-3, 1970.

REMARKS.--Records good. Several small diversions upstream for irrigation.

DISCHARGE, IN CUBIC FEET PER SECOND, WATER YEAR OCTOBER 1971 TO SEPTEMBER 1972

DAY	OCT	NOV	DEC	JAN	FEB	MAR	APR	MAY	JUN	JUL	AUG	SEP
1	1.2	4.6	10	8.4	28	112	44	45	70	4.5	.83	.62
2	1.2	4.4	12	8.1	29	170	54	49	65	4.7	.77	.67
3	1.2	4.4	10	7.8	32	268	60	57	63	4.5	.72	.67
4	1.2	4.2	10	7.6	33	212	79	67	54	2.6	.72	.67
5	1.2	4.2	15	7.3	32	182	186	72	51	2.3	.72	.62
6	1.2	4.2	23	7.2	29	148	168	79	51	2.2	.67	.54
7	1.2	4.8	16	7.8	27	130	123	80	54	1.9	.67	.54
8	1.2	5.2	14	8.0	26	119	94	64	59	1.7	.67	.50
9	1.2	8.9	16	8.1	24	136	74	54	72	1.5	.77	.50
10	1.2	16	14	8.4	23	134	65	52	65	1.4	.83	.50
11	1.2	26	12	9.2	22	121	62	54	49	1.3	.72	.50
12	1.2	19	11	12	22	115	56	62	40	1.3	.72	.54
13	1.2	15	11	14	22	124	51	74	35	1.4	.72	.58
14	1.2	11	12	13	22	112	48	98	32	1.3	.77	.58
15	1.2	9.2	11	12	22	103	48	98	32	1.2	.89	.54
16	1.5	8.5	9.6	12	23	107	48	101	29	1.1	.96	.54
17	2.2	7.5	10	13	24	119	45	83	25	.96	.96	.54
18	2.3	6.4	9.3	19	24	126	39	63	24	.96	.83	.54
19	2.3	5.9	8.9	29	24	105	30	59	22	.89	.83	.54
20	2.4	6.1	8.7	34	32	89	25	85	21	.89	.72	.54
21	2.4	6.9	9.2	109	33	82	27	66	18	.89	.67	.54
22	2.9	6.9	11	409	33	119	30	55	15	.83	.77	.54
23	36	6.7	9.6	281	31	89	36	54	13	.83	.77	.54
24	18	6.9	14	175	30	76	40	57	14	.83	.77	.54
25	6.1	6.9	12	108	28	66	34	57	14	.89	.72	.54
26	5.7	16	11	78	36	58	34	61	13	.83	.72	.58
27	5.7	17	10	64	45	52	36	67	12	.83	.67	.62
28	5.2	15	9.5	54	125	47	44	77	8.4	.83	.67	.67
29	4.6	13	9.2	39	146	44	44	89	4.5	.83	.67	.67
30	4.8	11	8.9	23	------	42	43	86	4.7	.83	.67	.67
31	4.8	------	8.6	27	------	41	------	82	------	.83	.62	------
TOTAL	124.9	281.8	356.5	1,612.9	1,027	3,448	1,767	2,147	1,029.6	47.85	23.21	17.18
MEAN	4.03	9.39	11.5	52.0	35.4	111	58.9	69.3	34.3	1.54	.75	.57
MAX	36	26	23	409	146	268	186	101	72	4.7	.96	.67
MIN	1.2	4.2	8.6	7.2	22	41	25	45	4.5	.83	.62	.50
AC-FT	248	559	707	3,200	2,040	6,840	3,500	4,260	2,040	95	46	34

CAL YR 1971 TOTAL 16,006.81 MEAN 43.9 MAX 449 MIN .94 AC-FT 31,750
WTR YR 1972 TOTAL 11,882.94 MEAN 32.5 MAX 409 MIN .50 AC-FT 23,570

PEAK DISCHARGE (BASE, 250 CFS).--Jan. 22 (1930) 558 cfs (6.18 ft); Mar. 2 (2400) 329 cfs (5.71 ft).

11518050 EAST FORK SCOTT RIVER AT CALLAHAN, CALIF.

LOCATION.--Lat 41°18'15", long 122°46'32", in SE¼NW¼ sec.22, T.40 N., R.8 W., Siskiyou County, on right bank 1.0 mile downstream from Big Mill Creek, and 1.4 miles east of Callahan.

DRAINAGE AREA.--110 sq mi.

PERIOD OF RECORD.--October 1959 to current year.

GAGE.--Water-stage recorder. Altitude of gage is 3,200 ft (from topographic map). Prior to July 26, 1961, at site 1.6 miles downstream at different datum. July 26, 1961, to Aug. 23, 1971, at datum 0.46 ft higher.

AVERAGE DISCHARGE.--13 years, 103 cfs (74,620 acre-ft per year).

EXTREMES.--Current year: Maximum discharge, 1,670 cfs Jan. 22 (gage height, 6.76 ft); minimum daily, 2.6 cfs Sept. 4.
Period of record: Maximum discharge, 7,480 cfs Dec. 22, 1964 (gage heights, 10.39 ft in gage well, 10.19 ft, from floodmarks, present datum), from rating curve extended above 3,000 cfs on basis of slope-area measurements at gage heights 9.51 and 10.39 ft (present datum); minimum daily, 0.72 cfs Aug. 22, 23, Sept. 23, 24, 1970.

REMARKS.--Records good except those for April 1 to Aug. 4, which are fair. Small diversions 0.5 mile upstream from station for irrigation.

REVISIONS.--WSP 1929: Drainage area.

DISCHARGE, IN CUBIC FEET PER SECOND, WATER YEAR OCTOBER 1971 TO SEPTEMBER 1972

DAY	OCT	NOV	DEC	JAN	FEB	MAR	APR	MAY	JUN	JUL	AUG	SEP
1	5.9	13	30	30	81	313	98	71	185	24	4.9	2.8
2	5.9	13	36	31	73	475	126	76	165	24	4.9	2.8
3	5.9	13	33	29	71	660	143	94	137	22	4.6	2.8
4	5.9	13	31	34	73	505	214	153	103	21	4.5	2.6
5	5.9	13	41	32	73	435	715	191	101	20	4.3	3.2
6	5.9	12	72	29	68	370	470	200	99	19	4.0	3.0
7	5.9	12	53	31	63	325	317	203	112	17	4.0	2.8
8	6.6	13	45	30	62	289	230	170	135	17	3.8	2.8
9	7.0	19	47	30	59	365	172	146	146	16	3.8	2.8
10	7.0	39	41	29	57	375	153	133	144	16	4.0	2.8
11	7.0	87	36	30	56	334	146	120	86	15	4.0	2.8
12	7.0	58	34	32	56	325	137	150	70	14	4.0	2.8
13	7.0	53	35	39	56	348	124	200	64	13	4.0	2.8
14	6.6	35	34	38	57	282	114	233	65	9.8	4.0	2.8
15	7.4	28	33	36	57	243	116	248	65	10	4.0	2.8
16	8.5	26	30	35	57	254	116	245	60	9.8	4.9	2.8
17	8.5	23	31	36	60	305	108	221	54	9.4	5.5	2.8
18	8.5	21	30	56	59	317	96	150	52	9.0	5.2	2.8
19	9.3	18	29	107	63	240	85	94	48	8.6	5.2	2.8
20	11	18	29	138	109	193	77	146	47	8.3	4.9	2.8
21	11	19	29	544	104	177	77	126	45	8.0	4.9	2.8
22	11	19	32	1,290	98	341	77	89	41	7.2	4.9	2.8
23	35	19	30	763	87	278	82	86	38	6.9	4.3	2.8
24	34	22	42	395	83	226	92	94	35	6.6	4.0	2.8
25	16	22	46	246	78	170	85	96	31	6.6	4.0	2.8
26	14	54	40	180	92	145	74	110	31	6.2	3.8	3.0
27	14	59	38	152	144	129	72	146	29	5.8	3.5	3.2
28	13	49	35	124	555	115	85	185	29	5.8	3.2	3.5
29	13	40	34	104	465	104	77	218	26	5.2	3.0	3.5
30	12	34	32	96	------	98	72	221	26	5.2	3.0	3.5
31	13	------	31	92	------	92	------	206	------	5.2	2.8	------
TOTAL	328.7	864	1,139	4,838	3,016	8,828	4,550	4,821	2,269	371.6	129.9	87.1
MEAN	10.6	28.8	36.7	156	104	285	152	156	75.6	12.0	4.19	2.90
MAX	35	87	72	1,290	555	660	715	248	185	24	5.5	3.5
MIN	5.9	12	29	29	56	92	72	71	26	5.2	2.8	2.6
AC-FT	652	1,710	2,260	9,600	5,980	17,510	9,020	9,560	4,500	737	258	173

CAL YR 1971 TOTAL 40,189.5 MEAN 110 MAX 997 MIN 3.8 AC-FT 79,720
WTR YR 1972 TOTAL 31,242.3 MEAN 85.4 MAX 1,290 MIN 2.6 AC-FT 61,970

PEAK DISCHARGE (BASE, 550 CFS)

DATE	TIME	G.H.	DISCHARGE	DATE	TIME	G.H.	DISCHARGE
1-22	2000	6.76	1,670	3-3	0030	5.87	879
2-28	1915	5.79	823	4-5	0930	6.00	940

11518310 CEDAR GULCH NEAR CALLAHAN, CALIF.

LOCATION.--Lat 41°20'40", long 122°49'47", near center of sec.1, T.40 N., R.9 W., Siskiyou County, on left bank at culvert on county road, 2.9 miles northwest of Callahan.

DRAINAGE AREA.--0.99 sq mi.

PERIOD OF RECORD.--Water years 1961-66 (annual maximum), February 1966 to current year.

GAGE.--Water-stage recorder, crest-stage gages, and float-operated rain gage. Altitude of gage is 3,040 ft (from topographic map). Prior to Feb. 11, 1966, crest-stage gages only at same site and datum.

AVERAGE DISCHARGE.--6 years, 0.40 cfs (290 acre-ft per year).

EXTREMES.--Current year: Maximum discharge, 39 cfs Mar. 2 (gage height, 7.39 ft), from rating curve extended as explained below; no flow for several months.
Period of record: Maximum discharge, 144 cfs Dec. 22, 1964 (gage height, 10.18 ft, from floodmarks), from rating curve extended above 37 cfs on basis of computations of flow through culvert at gage heights 8.25 and 10.18 ft; no flow for several months in each year.

REMARKS.--Records good prior to April 11, fair thereafter. No regulation or diversion above station.

DISCHARGE, IN CUBIC FEET PER SECOND, WATER YEAR OCTOBER 1971 TO SEPTEMBER 1972

DAY	OCT	NOV	DEC	JAN	FEB	MAR	APR	MAY	JUN	JUL	AUG	SEP
1	0	.09	.37	.09	.29	6.1	.41	.24	.30			0
2	0	.09	.35	.09	.24	26	.44	.23	.26			0
3	0	.09	.22	.07	.24	12	.41	.22	.22			.03
4	0	.09	.14	.07	.24	4.1	.38	.20	.20			.06
5	0	.07	.20	.06	.22	2.4	.44	.19	.17			.07
6	0	.07	.32	.05	.22	1.7	.38	.19	.22			.06
7	0	.07	.16	.05	.22	1.4	.35	.22	.30			.12
8	0	.06	.12	.06	.22	1.2	.38	.22	.46			.14
9	0	.06	.28	.05	.22	1.0	.38	.22	.43			.12
10	0	.06	.22	.05	.22	.92	.41	.22	.33			.19
11	0	.05	.16	.05	.22	.87	.52	.22	.24			.38
12	0	.05	.16	.06	.19	.78	.64	.22	.14			.44
13	0	.06	.12	.06	.19	.73	.67	.23	.14			.29
14	0	.06	.12	.06	.16	.68	.70	.24	.14			.06
15	0	.06	.12	.05	.16	.64	.74	.25	.13			.02
16	0	.05	.11	.05	.16	.60	.77	.27	.13			0
17	0	.03	.11	.05	.14	.56	.82	.33	.13			0
18	0	.03	.09	.06	.14	.52	.76	.48	.12			0
19	0	.02	.09	.09	.14	.52	.68	.64	.12			0
20	0	.01	.09	.12	.12	.48	.61	.72	.12			0
21	0	.01	.07	8.6	.12	.48	.55	.58	.14			0
22	0	.01	.12	24	.16	.64	.50	.42	.16			0
23	0	.01	.12	9.3	.26	.56	.46	.34	.16			0
24	0	.01	.24	2.1	.41	.56	.41	.28	.14			0
25	.01	.01	.26	1.7	.44	.52	.38	.23	.07			0
26	.02	.50	.22	1.1	.83	.48	.35	.21	.03			0
27	.03	.76	.16	.82	1.8	.44	.32	.21	.01			0
28	.05	.78	.12	.58	6.8	.44	.30	.21	0			0
29	.07	.56	.12	.38	3.4	.41	.28	.22	0			0
30	.07	.44	.12	.35	------	.38	.26	.25	0			0
31	.09	------	.11	.32	------	.38	------	.28	------			------
TOTAL	.34	4.26	5.21	50.54	18.17	68.49	14.70	8.98	5.01	0	0	1.98
MEAN	.011	.14	.17	1.63	.63	2.21	.49	.29	.17	0	0	.066
MAX	.09	.78	.37	24	6.8	26	.82	.72	.46	0	0	.44
MIN	0	.01	.07	.05	.12	.38	.26	.19	0	0	0	0
AC-FT	.7	8.5	10	100	36	136	29	18	9.9	0	0	3.9
(a)	.05	3.33	2.35	5.32	2.09	.36	0	0	0	0	0	.07

CAL YR 1971 TOTAL 159.35 MEAN .44 MAX 23 MIN 0 AC-FT 316
WTR YR 1972 TOTAL 177.68 MEAN .49 MAX 26 MIN 0 AC-FT 352

a Precipitation, in inches (some precipitation falling as snow may not be included).
NOTE.--No gage-height record Apr. 12 to May 5, May 7 to July 7.

11519500 SCOTT RIVER NEAR FORT JONES, CALIF.

LOCATION.--Lat 41°38'28", long 123°00'54", in NE¼NE¼ sec.29, T.44 N., R.10 W., Siskiyou County, on right bank 1.7 miles upstream from Snow Creek, and 10.8 miles downstream from Fort Jones.

DRAINAGE AREA.--653 sq mi.

PERIOD OF RECORD.--December 1941 to current year. Monthly discharge only October to December 1941, published in WSP 1315-B.

GAGE.--Water-stage recorder. Datum of gage is 2,623.80 ft above mean sea level (levels by Corps of Engineers). Prior to Oct. 1, 1966, water-stage recorder 400 ft downstream at datum 2.00 ft higher.

AVERAGE DISCHARGE.--31 years, 668 cfs (484,000 acre-ft per year).

EXTREMES.--Current year: Maximum discharge, 14,800 cfs Mar. 3 (gage height, 17.14 ft); minimum daily, 59 cfs Aug. 12, 13.
Period of record: Maximum discharge, 54,600 cfs Dec. 22, 1964 (gage height, 25.34 ft, from floodmarks, site and datum then in use), from rating curve extended above 15,000 cfs on basis of slope-area measurement at 21.40 ft; minimum, 20 cfs Sept. 14, 15, 1955.

REMARKS.--Records good. Diversions for irrigation of about 30,000 acres above station. Records of chemical analyses for the current year are published in Part 2 of this report.

REVISIONS (WATER YEARS).--WSP 1445: 1942-43(M), 1946(M), 1948. WSP 1715: 1951-52(M). WSP 1929: Drainage area.

DISCHARGE, IN CUBIC FEET PER SECOND, WATER YEAR OCTOBER 1971 TO SEPTEMBER 1972

DAY	OCT	NOV	DEC	JAN	FEB	MAR	APR	MAY	JUN	JUL	AUG	SEP
1	102	125	418	254	858	3,520	894	562	1,290	275	72	61
2	105	123	374	251	755	8,440	1,100	573	1,220	262	68	61
3	107	123	357	244	725	13,000	1,170	626	1,110	255	68	61
4	107	123	319	222	705	6,860	1,190	758	980	243	67	64
5	107	121	314	216	705	4,730	1,750	971	959	231	66	72
6	105	119	755	227	686	3,670	2,070	1,100	997	213	63	71
7	105	119	650	232	640	2,990	1,590	1,050	1,090	197	63	69
8	105	119	510	225	614	2,580	1,340	949	1,130	178	61	69
9	105	123	538	220	586	2,440	1,220	787	1,120	155	61	68
10	103	197	547	213	560	2,540	1,080	733	1,170	145	60	68
11	102	207	470	215	537	2,530	1,050	704	958	135	61	68
12	100	245	441	225	524	2,400	1,070	738	806	127	59	68
13	99	259	408	239	519	2,840	1,000	918	728	125	59	67
14	100	245	385	232	528	2,460	905	1,200	704	123	60	67
15	100	210	370	224	524	2,120	877	1,440	699	118	60	67
16	103	190	334	221	519	2,100	861	1,360	673	113	61	73
17	102	174	310	225	519	2,250	821	1,330	646	110	62	73
18	103	169	303	259	519	2,320	772	1,060	608	102	61	71
19	111	163	297	382	514	1,950	744	886	584	101	63	71
20	113	160	290	555	596	1,670	686	895	521	91	63	71
21	117	155	282	2,750	650	1,490	647	993	499	91	63	70
22	119	149	308	9,690	710	1,800	638	874	475	91	62	69
23	123	149	333	10,400	760	1,730	641	810	450	89	62	69
24	125	152	321	4,320	840	1,520	683	815	423	92	62	70
25	137	160	335	2,850	750	1,410	650	825	395	84	62	70
26	132	532	311	2,160	830	1,250	590	869	371	82	62	71
27	130	1,240	298	1,760	1,400	1,140	543	1,000	332	82	62	72
28	130	825	284	1,440	5,480	1,050	596	1,190	316	84	63	72
29	130	672	278	1,150	6,130	984	598	1,390	301	82	63	72
30	127	510	271	1,010	------	912	575	1,380	293	80	63	71
31	130	------	261	936	------	888	------	1,310	------	75	62	------
TOTAL	3,484	7,858	11,672	43,547	29,683	87,584	28,351	30,096	21,848	4,231	1,944	2,066
MEAN	112	262	377	1,405	1,024	2,825	945	971	728	136	62.7	68.9
MAX	137	1,240	755	10,400	6,130	13,000	2,070	1,440	1,290	275	72	73
MIN	99	119	261	213	514	888	543	562	293	75	59	61
AC-FT	6,910	15,590	23,150	86,380	58,880	173,700	56,230	59,700	43,340	8,390	3,860	4,100

CAL YR 1971 TOTAL 346,323 MEAN 949 MAX 14,800 MIN 53 AC-FT 686,900
WTR YR 1972 TOTAL 272,364 MEAN 744 MAX 13,000 MIN 59 AC-FT 540,200

PEAK DISCHARGE (BASE, 2,300 CFS)

DATE	TIME	G.H.	DISCHARGE	DATE	TIME	G.H.	DISCHARGE
1-23	0230	16.21	13,200	3-3	0900	17.14	14,800
2-29	0500	13.16	7,320	3-13	1415	10.11	3,070

11520500 KLAMATH RIVER NEAR SEIAD VALLEY, CALIF.

LOCATION.--Lat 41°51'14", long 123°13'52", in SW¼SW¼ sec.3, T.46 N., R.12 W., Siskiyou County, Klamath National Forest, on left bank 0.4 mile upstream from Bittenbender Creek, 1.4 miles downstream from Grider Creek, and 2.2 miles west of Seiad Valley.

DRAINAGE AREA.--6,940 sq mi (revised), approximately (not including Lost River or Lower Klamath Lake basins).

PERIOD OF RECORD.--October 1912 to September 1925, July 1951 to current year. Monthly discharges only for some periods, published in WSP 1315-B.

GAGE.--Water-stage recorder. Altitude of gage is 1,320 ft (from river-profile map). November 1912 to June 1925, nonrecording gage at site 3.5 miles upstream at different datum.

AVERAGE DISCHARGE.--34 years, 4,157 cfs (3,012,000 acre-ft per year).

EXTREMES.--Current year: Maximum discharge, 55,800 cfs Mar. 3 (gage height, 20.20 ft recorded, 21.02 ft, from floodmarks); minimum daily, 1,010 cfs July 31.
Period of record: Maximum discharge, 165,000 cfs Dec. 23, 1964 (gage height, 33.75 ft, from floodmarks), from rating curve extended above 49,000 cfs on basis of slope-area measurements at gage heights 20.1 and 29.2 ft; minimum daily, 320 cfs Nov. 25, 1917.

REMARKS.--Records excellent. Flow considerably regulated by reservoirs and powerplants above station. Large diversions above station for irrigation. Records of water temperatures for the current year are published in Part 2 of this report.

DISCHARGE, IN CUBIC FEET PER SECOND, WATER YEAR OCTOBER 1971 TO SEPTEMBER 1972

DAY	OCT	NOV	DEC	JAN	FEB	MAR	APR	MAY	JUN	JUL	AUG	SEP
1	2,310	3,870	4,750	4,400	6,090	19,000	9,520	4,780	4,270	1,460	1,090	1,270
2	2,310	3,760	4,740	4,390	5,800	34,700	9,340	4,040	3,510	1,430	1,410	1,540
3	2,330	3,670	4,690	4,350	5,690	51,900	9,300	3,850	3,210	1,400	1,370	1,590
4	2,340	3,670	4,900	4,180	5,510	34,200	8,170	3,960	3,000	1,410	1,370	1,590
5	2,330	3,660	5,150	4,110	5,490	27,900	8,380	4,080	2,930	1,370	1,340	1,630
6	2,410	3,660	6,680	4,120	5,490	24,500	8,770	4,220	2,970	1,360	1,310	1,630
7	2,410	3,660	6,140	4,140	5,480	22,200	7,180	4,110	3,130	1,360	1,300	1,620
8	2,410	3,660	5,690	3,840	5,570	20,300	6,540	4,080	3,190	1,300	1,310	1,610
9	2,950	3,790	5,850	3,770	5,380	19,600	6,020	3,950	3,090	1,270	1,310	1,710
10	3,320	4,460	5,940	3,740	5,250	18,800	5,830	3,860	3,170	1,280	1,300	1,770
11	3,320	4,090	5,750	3,880	5,180	18,600	5,740	3,860	2,930	1,210	1,300	1,780
12	3,300	3,970	5,760	4,040	5,170	18,400	5,900	3,960	2,680	1,200	1,290	1,900
13	3,300	4,180	5,660	4,280	5,180	19,600	5,930	4,840	2,500	1,170	1,290	1,990
14	3,410	4,070	5,750	4,280	5,150	18,500	6,040	5,930	2,420	1,170	1,290	2,000
15	3,440	3,950	5,690	4,120	5,220	17,600	6,240	6,110	2,380	1,160	1,290	2,020
16	3,550	3,880	5,540	4,050	5,410	17,200	6,220	5,790	2,310	1,130	1,350	2,020
17	3,560	3,810	5,410	4,090	5,410	17,200	6,130	5,470	2,250	1,110	1,440	2,020
18	3,580	3,800	5,020	4,300	5,420	17,000	5,990	5,150	2,180	1,090	1,370	2,010
19	3,600	3,790	4,570	4,720	5,380	16,200	5,930	4,830	2,120	1,080	1,350	2,010
20	3,670	3,800	4,500	5,150	5,660	14,600	5,860	4,590	2,000	1,070	1,350	2,010
21	3,620	3,810	4,510	12,300	5,750	14,500	5,700	4,860	2,020	1,050	1,350	2,020
22	3,730	3,810	4,630	35,600	5,870	14,900	5,290	4,720	1,900	1,060	1,330	2,070
23	3,900	3,770	4,690	36,400	6,030	15,200	5,280	4,830	1,860	1,050	1,310	2,090
24	3,880	3,840	4,670	20,900	6,180	14,500	5,360	4,830	1,820	1,050	1,300	2,100
25	3,860	3,860	4,900	14,800	6,020	13,700	5,240	4,800	1,760	1,050	1,300	2,100
26	3,870	4,960	4,750	10,900	6,200	13,300	5,130	5,000	1,710	1,050	1,300	2,160
27	3,900	6,210	4,610	8,680	8,000	13,000	5,080	5,430	1,610	1,040	1,290	2,210
28	3,830	5,780	4,540	8,000	18,700	12,600	5,080	5,920	1,530	1,040	1,280	2,200
29	3,810	5,670	4,510	7,250	24,400	11,500	5,040	6,260	1,500	1,030	1,280	2,170
30	3,860	5,060	4,470	6,960	------	10,900	4,990	5,900	1,480	1,030	1,280	2,160
31	3,880	------	4,430	6,720	------	10,600	------	5,020	------	1,010	1,270	------
TOTAL	101,990	123,970	158,890	252,460	196,080	592,700	191,220	149,030	73,430	36,490	40,720	57,000
MEAN	3,290	4,132	5,125	8,144	6,761	19,120	6,374	4,807	2,448	1,177	1,314	1,900
MAX	3,900	6,210	6,680	36,400	24,400	51,900	9,520	6,260	4,270	1,460	1,440	2,210
MIN	2,310	3,660	4,430	3,740	5,150	10,600	4,990	3,850	1,480	1,010	1,090	1,270
AC-FT	202,300	245,900	315,200	500,800	388,900	1,176M	379,300	295,600	145,600	72,380	80,770	113,100

CAL YR 1971 TOTAL 2,160,960 MEAN 5,920 MAX 42,000 MIN 1,300 AC-FT 4,286,000
WTR YR 1972 TOTAL 1,973,980 MEAN 5,393 MAX 51,900 MIN 1,010 AC-FT 3,915,000

11521500 INDIAN CREEK NEAR HAPPY CAMP, CALIF.

LOCATION.--Lat 41°50'07", long 123°22'55", in SW¼SW¼ sec.26, T.17 N., R.7 E., Siskiyou County, on left bank 0.2 mile upstream from Slater Creek, 3.0 miles north of Happy Camp, and 3.5 miles upstream from mouth.

DRAINAGE AREA.--120 sq mi.

PERIOD OF RECORD.--September 1911 to September 1921 (fragmentary), December 1956 to current year. Monthly discharge only for some periods, published in WSP 1315-B.

GAGE.--Water-stage recorder. Altitude of gage is 1,200 ft (from topographic map). Prior to December 1956, nonrecording gages at sites 0.2 mile upstream at different datums. December 1956 to Sept. 20, 1969, water-stage recorder at site 0.8 mile upstream at different datum.

AVERAGE DISCHARGE.--18 years (1911-14, 1957-72), 448 cfs (324,600 acre-ft per year).

EXTREMES.--Current year: Maximum discharge, 15,000 cfs Mar. 2 (gage height, 15.10 ft in gage well, 16.1 ft, from floodmarks); minimum daily, 44 cfs Sept. 16-18.

Period of record: Maximum discharge, 39,000 cfs Dec. 22, 1964 (gage height, 36.59 ft, from floodmarks in gage well, site and datum then in use, 24.3 ft, from floodmarks, present site and datum), from rating curve extended above 6,000 cfs on basis of slope-area measurement at gage height 29.0 ft; minimum observed, 20 cfs Aug. 19 to Sept. 6, 1914.

Flood of Dec. 21, 1955, reached a stage of 29.0 ft, site and datum then in use, from floodmarks (discharge, 23,000 cfs on basis of slope-area measurement of peak flow).

REMARKS.--Records good. Small diversions above station for irrigation.

REVISIONS (WATER YEARS).--WSP 1635: 1957-58.

DISCHARGE, IN CUBIC FEET PER SECOND, WATER YEAR OCTOBER 1971 TO SEPTEMBER 1972

DAY	OCT	NOV	DEC	JAN	FEB	MAR	APR	MAY	JUN	JUL	AUG	SEP
1	94	72	556	229	548	2,080	602	445	307	119	64	48
2	89	77	478	228	506	9,170	644	465	291	115	62	47
3	94	72	416	225	482	6,770	695	510	275	111	63	51
4	112	68	369	217	475	3,350	664	580	259	108	61	55
5	104	66	659	211	465	2,460	1,270	614	259	105	60	56
6	89	66	1,330	207	460	2,030	1,040	566	261	102	60	51
7	78	70	734	206	450	1,730	909	515	249	98	58	50
8	72	68	568	200	450	1,510	845	460	234	97	58	49
9	67	213	743	194	450	1,590	761	435	248	96	57	48
10	64	1,040	644	189	445	1,890	692	430	233	94	56	48
11	62	460	533	191	440	1,990	656	425	223	92	55	48
12	60	288	540	209	450	2,080	692	455	204	91	56	48
13	58	492	447	227	505	2,340	632	520	192	88	56	47
14	57	354	436	223	530	1,800	626	535	192	86	56	46
15	58	252	394	222	510	1,530	674	495	189	84	57	45
16	58	201	355	227	535	1,600	698	505	178	80	69	44
17	56	174	333	251	602	1,630	644	495	170	77	67	44
18	56	157	317	501	608	1,530	590	430	165	76	62	44
19	83	146	299	752	650	1,290	555	385	161	75	60	45
20	102	149	284	2,020	854	1,120	530	405	157	75	66	47
21	76	154	283	6,720	734	1,040	530	405	154	75	63	47
22	70	147	371	11,900	718	1,300	520	365	149	74	60	50
23	68	143	382	5,180	700	1,080	515	342	144	74	57	50
24	66	276	382	2,330	685	985	535	338	141	73	56	50
25	63	293	357	1,540	1,200	887	495	328	137	71	55	48
26	66	2,340	322	1,150	2,400	796	480	338	134	70	53	59
27	75	1,300	293	947	5,450	728	500	365	131	69	52	60
28	68	1,310	272	807	7,350	674	535	380	129	68	50	54
29	65	1,070	258	715	2,740	632	480	360	127	67	49	51
30	70	750	243	654	------	596	450	333	123	67	48	49
31	73	------	232	593	------	572	------	315	------	65	48	------
TOTAL	2,273	12,268	13,830	39,465	32,392	58,780	19,459	13,539	5,816	2,642	1,794	1,479
MEAN	73.3	409	446	1,273	1,117	1,896	649	437	194	85.2	57.9	49.3
MAX	112	2,340	1,330	11,900	7,350	9,170	1,270	614	307	119	69	60
MIN	56	66	232	189	440	572	450	315	123	65	48	44
AC-FT	4,510	24,330	27,430	78,280	64,250	116,600	38,600	26,850	11,540	5,240	3,560	2,930

CAL YR 1971 TOTAL 211,170 MEAN 579 MAX 8,860 MIN 52 AC-FT 418,900
WTR YR 1972 TOTAL 203,737 MEAN 557 MAX 11,900 MIN 44 AC-FT 404,100

PEAK DISCHARGE (BASE, 2,000 CFS)

DATE	TIME	G.H.	DISCHARGE	DATE	TIME	G.H.	DISCHARGE
11-26	1545	9.10	4,140	2-28	unknown	14.02	12,500
12-5	2345	7.71	2,340	3-2	1845	15.10	15,000
1-22	0730	14.23	14,000	3-13	0045	8.29	2,690

11522500 SALMON RIVER AT SOMES BAR, CALIF.

LOCATION.--Lat 41°22'40", long 123°28'35", in NE¼ sec.3, T.11 N., R.6 E., Siskiyou County, Klamath National Forest, on left bank at Somes Bar, 1.0 mile upstream from mouth.

DRAINAGE AREA.--751 sq mi.

PERIOD OF RECORD.--September 1911 to September 1915, October 1927 to current year. Monthly discharge only for some periods, published in WSP 1315-B.

GAGE.--Water-stage recorder. Datum of gage is 482.97 ft above mean sea level. Prior to October 1927, nonrecording gage at different datum, October 1927 to Dec. 22, 1964, water-stage recorder at site 0.5 mile upstream at datum 6.54 ft higher.

AVERAGE DISCHARGE.--49 years, 1,804 cfs (1,307,000 acre-ft per year).

EXTREMES.--Current year: Maximum discharge, 56,900 cfs Mar. 2 (gage height, 24.84 ft), from rating curve extended above 19,000 cfs on basis of slope-area measurement of peak flow; minimum daily, 180 cfs Sept. 17-19.
Period of record: Maximum discharge, 133,000 cfs Dec. 22, 1964 (gage height, 46.6 ft, present site and datum, from floodmarks), from rating curve extended above 33,000 cfs; minimum, 70 cfs Aug. 25, Sept. 4, 5, 1931.
REVISIONS.--Figures of maximum discharge for the water years 1970 and 1971 have been revised to 42,600 cfs Jan. 22, 1970 (gage height, 20.21 ft) and 51,700 cfs Jan. 18, 1971 (gage height, 23.23 ft), superseding figures published in WRD Calif. 1970 and 1971.

REMARKS.--Records good. No storage or large diversion above station. Records of water temperatures for the current year are published in Part 2 of this report.

REVISIONS (WATER YEARS).--WSP 1285: 1912, 1914, 1915(M), 1946(M), 1948(M).

REVISED PEAK DISCHARGE.--1970: Jan. 22 (0930) 42,600 cfs (20.21 ft); Jan. 27 (0230) 40,400 cfs (19.48 ft).
1971: Nov. 24 (1745) 33,800 cfs (17.28 ft); Jan. 18 (0100) 51,700 cfs (23.23 ft).

DISCHARGE, IN CUBIC FEET PER SECOND, WATER YEAR OCTOBER 1971 TO SEPTEMBER 1972

DAY	OCT	NOV	DEC	JAN	FEB	MAR	APR	MAY	JUN	JUL	AUG	SEP
1	405	338	1,820	1,050	2,150	12,600	2,350	2,280	2,950	952	362	205
2	370	330	1,590	1,040	1,800	38,800	3,180	2,420	2,750	889	357	205
3	385	326	1,400	1,030	1,620	43,600	3,240	2,630	2,520	847	353	205
4	425	318	1,240	990	1,580	26,600	3,180	3,000	2,270	798	344	205
5	425	310	1,570	1,020	1,510	19,600	4,540	3,380	2,380	740	335	205
6	390	306	5,170	965	1,430	14,300	4,460	3,370	2,530	692	326	205
7	360	298	3,050	963	1,380	11,300	3,860	3,070	2,570	656	318	201
8	338	298	2,260	954	1,340	9,890	3,590	2,640	2,510	614	314	198
9	318	370	2,630	933	1,320	8,990	3,260	2,410	2,610	590	310	194
10	302	1,880	2,500	909	1,280	9,020	3,030	2,400	2,380	566	306	194
11	290	1,090	2,080	897	1,260	8,680	3,010	2,450	1,930	554	302	194
12	282	968	2,040	902	1,220	8,330	3,160	2,690	1,690	548	298	194
13	274	1,300	1,790	926	1,260	9,270	3,030	3,270	1,570	536	294	194
14	267	1,010	1,680	918	1,330	7,280	2,940	3,680	1,660	519	298	194
15	263	748	1,570	908	1,300	6,240	3,040	3,610	1,730	508	298	191
16	263	628	1,420	912	1,270	6,380	3,160	3,420	1,640	503	318	184
17	263	571	1,380	959	1,260	6,460	3,000	3,220	1,580	481	353	180
18	263	531	1,350	1,600	1,250	6,000	2,790	2,680	1,530	465	318	180
19	294	499	1,330	2,260	1,290	4,720	2,630	2,360	1,450	445	298	180
20	490	502	1,290	3,390	1,820	4,040	2,520	2,500	1,440	430	298	187
21	395	534	1,270	17,100	1,700	3,740	2,490	2,490	1,440	420	282	187
22	334	530	1,840	41,200	1,820	4,600	2,430	2,210	1,290	415	262	191
23	380	516	1,970	31,200	1,920	3,890	2,430	2,180	1,220	410	250	191
24	390	799	1,870	15,400	2,260	3,810	2,530	2,300	1,100	400	243	191
25	350	847	1,800	9,390	2,130	3,690	2,360	2,340	1,020	400	236	191
26	338	5,590	1,630	6,220	2,990	3,290	2,310	2,540	987	395	229	243
27	366	4,950	1,470	4,360	6,330	2,990	2,390	2,960	987	385	222	314
28	365	4,160	1,310	3,550	26,400	2,730	2,630	3,290	1,020	380	219	278
29	330	3,390	1,240	3,050	20,500	2,540	2,400	3,460	1,030	380	212	236
30	334	2,430	1,150	2,680	------	2,390	2,270	3,220	1,010	380	231	222
31	360	------	1,080	2,420	------	2,280	------	3,130	------	366	208	------
TOTAL	10,609	36,367	55,790	160,096	94,720	298,050	88,210	87,600	52,794	16,664	8,994	6,139
MEAN	342	1,212	1,800	5,164	3,266	9,615	2,940	2,826	1,760	538	290	205
MAX	490	5,590	5,170	41,200	26,400	43,600	4,540	3,680	2,950	952	362	314
MIN	263	298	1,080	897	1,220	2,280	2,270	2,180	987	366	208	180
AC-FT	21,040	72,130	110,700	317,600	187,900	591,200	175,000	173,800	104,700	33,050	17,840	12,180

CAL YR 1971 TOTAL 1,082,694 MEAN 2,966 MAX 54,800 MIN 225 AC-FT 2,148,000
WTR YR 1972 TOTAL 916,033 MEAN 2,503 MAX 43,600 MIN 180 AC-FT 1,817,000

PEAK DISCHARGE (BASE, 10,000 CFS)

DATE	TIME	G.H.	DISCHARGE	DATE	TIME	G.H.	DISCHARGE
11-26	1915	10.74	12,200	2-28	2230	15.86	29,500
1-22	2200	20.91	44,700	3-2	2400	24.84	56,900

11523000 KLAMATH RIVER AT ORLEANS, CALIF.

LOCATION.--Lat 41°18'13", long 123°32'00", in SW¼NE¼ sec.31, T.11 N., R.6 E., Humboldt County, Six Rivers National Forest on right bank at Orleans, 25 ft upstream from highway bridge, and 0.2 mile downstream from Cheenitch Creek.

DRAINAGE AREA.--8,475 sq mi (not including Lost River or Lower Klamath Lake basins).

PERIOD OF RECORD.--October 1927 to current year. Monthly discharge only for some periods, published in WSP 1315-B. Prior to October 1965, published as "at Somesbar."

GAGE.--Water-stage recorder. Datum of gage is 355.98 ft above mean sea level. Prior to Oct. 1, 1965, at site 6.7 miles upstream at datum 90.68 ft higher.

AVERAGE DISCHARGE.--45 years, 8,122 cfs (5,884,000 acre-ft per year).

EXTREMES.--Current year: Maximum discharge, 191,000 cfs Mar. 3 (gage height, 32.82 ft); minimum daily, 1,630 cfs Sept. 1.
Period of record: Maximum discharge, 307,000 cfs Dec. 22, 1964 (gage height, 76.5 ft, from floodmarks, site and datum then in use), from rating curve extended above 80,000 cfs by slope-conveyance study; minimum daily, 320 cfs Aug. 25, Sept. 1, 1951.

REMARKS.--Records good. Flow considerably regulated by reservoirs and powerplants above station. Large diversions above station for irrigation. Records of water temperatures and suspended-sediment discharge for the current year are published in Part 2 of this report.

REVISIONS (WATER YEARS).--WSP 1565: 1935(M), 1949.

DISCHARGE, IN CUBIC FEET PER SECOND, WATER YEAR OCTOBER 1971 TO SEPTEMBER 1972

DAY	OCT	NOV	DEC	JAN	FEB	MAR	APR	MAY	JUN	JUL	AUG	SEP
1	3,550	4,360	10,200	7,060	13,300	42,000	15,500	9,800	9,460	3,390	1,720	1,630
2	3,460	4,360	9,200	6,970	12,000	121,000	15,800	9,410	8,550	3,270	1,840	1,800
3	3,490	4,250	8,580	6,860	11,400	151,000	16,000	8,870	7,780	3,140	2,110	1,970
4	3,570	4,220	8,100	6,700	11,200	88,500	15,300	9,510	7,240	3,020	2,170	2,020
5	3,550	4,220	8,900	6,530	10,900	63,100	17,300	9,980	7,220	2,900	2,150	2,040
6	3,480	4,220	22,600	6,470	10,700	49,300	19,400	10,100	7,410	2,740	2,090	2,070
7	3,470	4,260	15,600	6,470	10,500	44,800	17,100	9,660	7,690	2,650	2,060	2,060
8	3,430	4,270	11,900	6,370	10,400	41,100	15,100	9,050	7,770	2,580	2,060	2,020
9	3,430	4,430	12,900	6,130	10,400	41,000	13,600	8,550	7,690	2,540	2,050	2,000
10	3,960	10,000	12,900	6,070	10,000	42,300	12,700	8,390	7,730	2,470	2,040	2,150
11	4,000	7,130	11,400	6,100	9,780	43,200	12,200	8,310	7,250	2,380	2,030	2,170
12	3,970	5,890	11,400	6,290	9,660	43,400	12,800	8,530	6,760	2,340	2,020	2,190
13	3,960	6,860	10,400	6,530	9,780	49,300	12,600	9,390	6,290	2,300	2,020	2,480
14	3,980	6,310	9,940	6,590	10,100	43,400	12,300	11,300	6,050	2,230	2,020	2,500
15	4,050	5,570	9,720	6,440	9,880	38,200	12,700	11,900	5,870	2,160	2,020	2,500
16	4,120	5,320	9,220	6,340	9,980	38,500	12,900	11,800	5,620	2,120	2,100	2,500
17	4,180	5,110	8,800	6,400	10,300	37,500	12,700	11,500	5,370	2,070	2,220	2,500
18	4,180	5,020	8,420	7,980	10,600	35,600	12,300	10,400	5,270	2,030	2,080	2,500
19	4,280	4,940	7,860	10,300	10,400	31,800	11,800	9,530	5,100	2,000	2,030	2,500
20	4,650	4,930	7,460	17,900	13,300	28,000	11,400	9,260	4,970	1,950	1,990	2,510
21	4,390	4,970	7,370	67,600	12,800	25,900	11,100	9,480	4,830	1,910	1,960	2,530
22	4,280	4,960	8,760	135,000	13,200	28,900	10,700	9,050	4,650	1,880	1,930	2,590
23	4,440	4,910	9,300	116,000	14,400	27,900	10,400	8,800	4,380	1,880	1,870	2,670
24	4,430	5,440	9,200	58,100	16,900	26,300	10,700	9,010	4,210	1,850	1,820	2,680
25	4,340	5,670	9,240	39,100	15,900	24,600	10,500	8,970	4,030	1,830	1,780	2,680
26	4,330	21,400	8,840	30,200	18,400	22,400	10,100	9,230	3,860	1,810	1,770	2,950
27	4,410	23,700	8,320	26,200	31,400	20,900	9,910	10,100	3,770	1,780	1,750	3,170
28	4,360	19,400	7,840	20,300	84,600	19,800	10,300	11,700	3,640	1,770	1,710	3,070
29	4,310	19,000	7,530	17,700	69,900	18,200	10,100	11,800	3,570	1,770	1,680	2,930
30	4,330	13,200	7,290	15,800	------	16,800	9,930	11,300	3,470	1,770	1,660	2,870
31	4,410	------	7,130	14,800	------	16,000	------	10,500	------	1,750	1,640	------
TOTAL	124,790	228,320	306,320	687,300	492,080	1,320.7M	385,240	305,180	177,500	70,280	60,390	72,250
MEAN	4,025	7,611	9,881	22,170	16,970	42,600	12,840	9,845	5,917	2,267	1,948	2,408
MAX	4,650	23,700	22,600	135,000	84,600	151,000	19,400	11,900	9,460	3,390	2,220	3,170
MIN	3,430	4,220	7,130	6,070	9,660	16,000	9,910	8,310	3,470	1,750	1,640	1,630
AC-FT	247,500	452,900	607,600	1,363M	976,000	2,620M	764,100	605,300	352,100	139,400	119,800	143,300

CAL YR 1971 TOTAL 4,889,660 MEAN 13,400 MAX 157,000 MIN 2,050 AC-FT 9,699,000
WTR YR 1972 TOTAL 4,230,350 MEAN 11,560 MAX 151,000 MIN 1,630 AC-FT 8,391,000

PEAK DISCHARGE (BASE, 40,000 CFS)

DATE	TIME	G.H.	DISCHARGE	DATE	TIME	G.H.	DISCHARGE
11-26	2015	15.51	42,000	3-3	0030	32.82	191,000
1-22	1645	31.05	174,000	3-13	0945	17.28	53,000
2-28	2300	22.67	93,400				

11523200 TRINITY RIVER ABOVE COFFEE CREEK, NEAR TRINITY CENTER, CALIF.

LOCATION.--Lat 41°06'29", long 122°42'23", on line between secs.31 and 32, T.38 N., R.7 W., Trinity County, Shasta National Forest, on right bank 250 ft downstream from Chinquapin Gulch, 1.8 miles upstream from Coffee Creek, and 8.5 miles north of Trinity Center.

DRAINAGE AREA.--149 sq mi.

PERIOD OF RECORD.--September 1957 to current year.

GAGE.--Water-stage recorder. Datum of gage is 2,533.36 ft above mean sea level.

AVERAGE DISCHARGE.--15 years, 421 cfs (305,000 acre-ft per year).

EXTREMES.--Current year: Maximum discharge, 3,920 cfs Jan. 22 (gage height, 6.65 ft); minimum daily, 33 cfs Sept. 16, 18-21, 23.
Period of record: Maximum discharge, 20,800 cfs Dec. 22, 1964 (gage height, 12.30 ft in gage well, 13.4 ft, from floodmarks), from rating curve extended above 5,000 cfs on basis of slope-area measurement at gage height 9.91 ft; minimum daily, 27 cfs Nov. 3, 1966.
Flood of Dec. 22, 1955, reached a stage of 10.5 ft, from floodmarks (discharge, 11,400 cfs).

REMARKS.--Records excellent. No regulation or diversion above station.

DISCHARGE, IN CUBIC FEET PER SECOND, WATER YEAR OCTOBER 1971 TO SEPTEMBER 1972

DAY	OCT	NOV	DEC	JAN	FEB	MAR	APR	MAY	JUN	JUL	AUG	SEP
1	55	54	104	101	221	1,160	552	731	666	113	47	35
2	56	54	122	106	208	1,930	694	867	621	107	47	35
3	54	53	112	108	200	2,720	798	1,000	561	103	46	38
4	51	52	102	105	200	1,840	1,120	1,150	569	98	45	37
5	48	52	111	105	194	1,610	2,930	1,250	507	94	44	40
6	47	51	183	103	194	1,390	1,960	1,220	502	91	43	39
7	46	50	137	107	195	1,290	1,330	1,110	481	89	42	38
8	45	51	121	106	195	1,250	1,040	842	434	86	42	36
9	44	81	118	103	195	1,600	857	754	579	84	42	35
10	44	157	111	101	200	1,740	744	764	406	83	41	35
11	44	290	101	101	210	1,690	723	796	336	79	40	36
12	42	203	108	111	224	1,560	674	905	303	77	38	39
13	42	203	100	150	240	1,820	604	1,060	296	73	38	38
14	42	127	95	147	257	1,500	588	1,190	293	70	40	36
15	44	98	92	144	260	1,440	637	1,140	282	68	42	35
16	49	86	88	146	290	1,640	672	1,020	266	66	55	33
17	49	80	89	147	310	1,850	627	844	248	63	55	34
18	49	76	91	181	329	1,770	577	690	230	61	47	33
19	53	73	94	296	370	1,330	539	617	217	60	44	33
20	67	78	94	350	799	1,110	524	686	209	59	44	33
21	61	84	101	1,130	717	1,040	556	603	198	59	45	33
22	55	82	118	2,900	622	1,660	586	559	184	60	43	34
23	62	78	120	2,170	529	1,210	622	563	177	58	41	33
24	62	90	155	907	459	1,020	652	594	167	57	39	34
25	56	91	151	608	400	852	572	620	155	55	39	36
26	56	113	128	456	387	723	565	673	144	54	38	42
27	58	116	116	377	488	638	669	746	136	53	37	49
28	54	133	107	314	2,080	579	835	818	130	51	37	42
29	51	139	104	273	1,980	535	711	867	124	50	37	36
30	54	121	100	254	------	510	659	825	118	51	37	36
31	55	------	99	237	------	511	------	747	------	49	36	------
TOTAL	1,595	3,016	3,472	12,444	12,953	41,518	24,617	26,251	9,479	2,221	1,311	1,093
MEAN	51.5	101	112	401	447	1,339	821	847	316	71.6	42.3	36.4
MAX	67	290	183	2,900	2,080	2,720	2,930	1,250	666	113	55	49
MIN	42	50	88	101	194	510	524	559	118	49	36	33
AC-FT	3,160	5,980	6,890	24,680	25,690	82,350	48,830	52,070	18,800	4,410	2,600	2,170

CAL YR 1971 TOTAL 162,580 MEAN 445 MAX 2,640 MIN 40 AC-FT 322,500
WTR YR 1972 TOTAL 139,970 MEAN 382 MAX 2,930 MIN 33 AC-FT 277,600

PEAK DISCHARGE (BASE, 1,900 CFS)

DATE	TIME	G.H.	DISCHARGE	DATE	TIME	G.H.	DISCHARGE
1-22	2200	6.65	3,920	3-17	2100	5.26	2,160
2-28	2100	6.14	3,200	3-22	0730	5.26	2,160
3-3	0130	6.34	3,480	4-5	1030	6.44	3,620

11525400 CLAIR ENGLE LAKE NEAR LEWISTON, CALIF.

LOCATION.--Lat 40°48'05", long 122°45'44", in sec.15, T.34 N., R.8 W., Trinity County, Trinity National Forest, on side of intake structure of Trinity Dam on Trinity River, 9 miles north of Lewiston.

DRAINAGE AREA.--692 sq mi.

PERIOD OF RECORD.--November 1960 to current year. Prior to October 1963 published as Trinity Lake near Lewiston.

GAGE.--Water-stage recorder. Datum of gage is at mean sea level (levels by Bureau of Reclamation). Prior to Jan. 4, 1962, nonrecording gage at same site and datum.

EXTREMES.--Current year: Maximum contents, 2,441,400 acre-ft May 31 (elevation, 2,369.62 ft); minimum, 1,913,000 acre-ft Sept. 30 (elevation, 2,334.85 ft).
Period of record: Maximum contents, 2,548,600 acre-ft Apr. 15, 1963 (elevation, 2,376.02 ft); minimum since lake first filled, 1,305,600 acre-ft Dec. 9, 1968 (elevation, 2,286.22 ft).

REMARKS.--The lake is formed by an earthfill dam completed in November 1960. Storage began Nov. 23, 1960. Usable capacity, 2,437,700 acre-ft between elevations 1,995.5 ft (elevation of invert of river outlets) and 2,370.0 ft (gross pool elevation) above mean sea level. Dead storage, 10,000 acre-ft. Records, including extremes, represent total contents at 2400 hours.

COOPERATION.--Records furnished by Bureau of Reclamation.

CAPACITY TABLE (ELEVATION, IN FEET, AND CONTENTS, IN ACRE-FEET)

1,960	670	2,100	162,231
1,970	1,894	2,140	292,850
1,980	4,131	2,190	529,611
2,000	12,373	2,250	955,140
2,020	26,436	2,310	1,583,590
2,040	47,023	2,380	2,616,990
2,070	92,906		

CONTENTS, IN THOUSANDS OF ACRE-FEET, AT 2400, WATER YEAR OCTOBER 1971 TO SEPTEMBER 1972

DAY	OCT	NOV	DEC	JAN	FEB	MAR	APR	MAY	JUN	JUL	AUG	SEP
1	2,102.70	1,976.70	1,928.20	1,929.50	2,018.30	2,127.00	2,301.60	2,350.00	2,439.70	2,386.20	2,209.80	2,071.80
2	2,099.80	1,972.60	1,928.80	1,929.50	2,019.80	2,149.30	2,301.00	2,352.10	2,437.80	2,381.30	2,203.70	2,067.10
3	2,097.20	1,968.40	1,929.30	1,929.20	2,021.30	2,174.30	2,300.70	2,354.60	2,436.60	2,376.00	2,198.00	2,062.50
4	2,094.40	1,964.20	1,929.30	1,928.60	2,023.20	2,184.80	2,301.80	2,358.30	2,435.80	2,370.80	2,194.50	2,057.60
5	2,091.30	1,960.10	1,929.70	1,928.40	2,024.80	2,194.80	2,311.70	2,361.20	2,436.60	2,364.90	2,190.40	2,052.30
6	2,088.30	1,955.50	1,930.20	1,928.20	2,026.20	2,202.50	2,316.20	2,363.60	2,437.10	2,359.10	2,186.30	2,047.60
7	2,085.30	1,951.50	1,930.30	1,927.80	2,027.30	2,208.40	2,317.80	2,365.20	2,437.40	2,352.90	2,182.30	2,043.10
8	2,082.20	1,947.20	1,930.60	1,927.60	2,028.00	2,212.90	2,318.30	2,365.70	2,436.90	2,346.30	2,178.20	2,038.20
9	2,077.40	1,944.10	1,930.90	1,927.30	2,028.90	2,219.20	2,320.60	2,365.90	2,437.10	2,340.30	2,174.00	2,033.00
10	2,072.70	1,940.50	1,931.20	1,927.10	2,029.90	2,225.00	2,323.00	2,366.50	2,436.60	2,334.70	2,169.40	2,028.00
11	2,067.70	1,938.70	1,931.20	1,926.90	2,030.80	2,232.20	2,326.30	2,369.10	2,438.90	2,329.80	2,164.30	2,023.20
12	2,062.50	1,936.30	1,932.00	1,926.80	2,031.80	2,239.80	2,329.30	2,372.90	2,440.10	2,325.20	2,158.70	2,018.50
13	2,056.60	1,934.60	1,931.70	1,927.10	2,032.70	2,251.40	2,330.90	2,377.50	2,441.20	2,320.20	2,153.40	2,014.30
14	2,050.30	1,930.90	1,931.60	1,926.90	2,033.80	2,256.00	2,333.30	2,382.80	2,440.90	2,315.30	2,147.80	2,010.00
15	2,045.00	1,927.80	1,931.30	1,926.90	2,035.00	2,260.50	2,335.40	2,388.30	2,440.20	2,310.40	2,142.90	2,005.70
16	2,042.80	1,926.40	1,930.90	1,926.50	2,036.30	2,268.70	2,337.30	2,392.70	2,439.20	2,305.20	2,139.00	2,001.50
17	2,038.40	1,925.80	1,927.80	1,926.40	2,037.80	2,279.40	2,338.90	2,395.90	2,439.20	2,299.70	2,135.00	1,997.00
18	2,034.40	1,925.40	1,927.20	1,926.50	2,039.60	2,287.70	2,340.10	2,398.80	2,440.40	2,293.30	2,131.20	1,991.50
19	2,030.80	1,924.80	1,926.80	1,927.80	2,041.60	2,295.40	2,341.10	2,401.40	2,438.40	2,286.30	2,126.80	1,986.40
20	2,027.40	1,924.40	1,926.40	1,931.20	2,046.60	2,299.00	2,342.40	2,405.30	2,435.80	2,279.80	2,123.10	1,981.50
21	2,023.30	1,924.00	1,927.20	1,944.20	2,050.40	2,300.20	2,343.60	2,407.90	2,432.50	2,273.50	2,118.90	1,975.20
22	2,018.90	1,923.40	1,927.50	1,973.30	2,055.40	2,306.20	2,343.30	2,410.20	2,427.70	2,267.60	2,114.70	1,967.50
23	2,015.00	1,922.70	1,928.30	1,991.20	2,059.10	2,308.20	2,342.50	2,412.70	2,421.70	2,261.70	2,110.20	1,959.60
24	2,010.90	1,921.70	1,929.70	1,998.60	2,062.50	2,310.10	2,342.00	2,415.40	2,416.40	2,255.70	2,106.00	1,952.40
25	2,006.70	1,922.50	1,930.20	2,004.40	2,066.20	2,310.30	2,342.00	2,418.50	2,411.50	2,249.50	2,102.10	1,945.50
26	2,002.20	1,924.80	1,931.00	2,008.00	2,077.30	2,309.80	2,343.50	2,422.00	2,407.40	2,243.50	2,098.00	1,939.80
27	1,998.00	1,926.50	1,930.90	2,010.80	2,076.40	2,309.00	2,344.80	2,426.60	2,403.40	2,237.80	2,094.10	1,933.70
28	1,993.50	1,927.80	1,930.60	2,013.00	2,099.20	2,307.40	2,346.80	2,431.00	2,399.10	2,234.40	2,089.90	1,926.80
29	1,989.00	1,928.20	1,930.60	2,013.50	2,116.60	2,306.60	2,348.30	2,435.90	2,395.10	2,228.20	2,085.50	1,919.90
30	1,985.00	1,928.60	1,930.20	2,014.70	------	2,305.10	2,349.10	2,440.60	2,390.40	2,222.40	2,081.00	1,913.00
31	1,980.60	------	1,929.90	2,016.60	------	2,303.00	------	2,441.40	------	2,216.10	2,076.40	------
MAX	2,102.70	1,976.70	1,932.00	2,016.60	2,116.60	2,310.30	2,349.10	2,441.40	2,441.20	2,386.20	2,209.80	2,071.80
MIN	1,980.60	1,921.70	1,926.40	1,926.40	2,018.30	2,127.00	2,300.70	2,350.00	2,390.40	2,216.10	2,076.40	1,913.00
(a)	2,339.60	2,335.96	2,336.05	2,342.08	2,348.85	2,361.02	2,363.93	2,369.62	2,366.50	2,355.41	2,346.15	2,334.85
(b)	-125.4	-52.0	+1.3	+86.7	+100.0	+186.4	+46.1	+92.3	-51.0	-174.3	-139.7	-163.4
(c)	2,160	550	-	-	-	1,490	3,600	6,450	8,370	10,170	8,020	4,670

CAL YR 1971 b -115.1
WTR YR 1972 b -193.0

a Elevation, in feet, at end of month.
b Change in contents, in thousands of acre-feet.
c Evaporation, in acre-feet.

11525430 JUDGE FRANCIS CARR POWERPLANT NEAR FRENCH GULCH, CALIF.

LOCATION.--Lat 40°38'49", long 122°37'34", (unsurveyed), Shasta County, at powerplant 1.6 miles downstream from Mill Creek, and 3.8 miles south of French Gulch.

PERIOD OF RECORD.--April 1963 to current year.

GAGE.--Recorded powerplant output.

EXTREMES.--Period of record: Maximum daily discharge, 3,910 cfs Feb. 11, 1970; no flow for several days in 1963, 1966, 1969, 1972.

REMARKS.--Water is diverted from Trinity River at NW¼SE¼ sec.8, T.33 N., R.8 W., through a tunnel to powerplant and then into Whiskeytown Lake (see sta 11371700). See schematic diagram of Pit and McCloud River basins.

COOPERATION.--Records furnished by Bureau of Reclamation, rounded to Geological Survey standards.

DISCHARGE, IN CUBIC FEET PER SECOND, WATER YEAR OCTOBER 1971 TO SEPTEMBER 1972

DAY	OCT	NOV	DEC	JAN	FEB	MAR	APR	MAY	JUN	JUL	AUG	SEP
1	1,570	1,990	458	382	0	1,050	2,860	1,920	3,230	2,920	2,880	2,050
2	1,290	1,990	366	370	0	1,030	2,860	2,050	2,970	2,860	2,880	2,060
3	1,440	1,990	361	379	0	1,030	2,860	1,850	2,580	2,860	2,880	2,060
4	1,530	1,980	485	346	0	3,250	2,860	1,680	2,320	2,860	2,070	2,060
5	1,580	1,990	372	369	0	3,130	2,860	2,360	1,920	2,860	2,030	2,060
6	1,550	1,990	363	376	5.0	2,130	2,760	2,180	1,930	2,860	2,030	2,060
7	1,500	1,990	363	365	522	2,400	2,960	2,280	1,910	2,860	2,050	2,130
8	1,560	1,990	386	378	394	2,460	2,930	2,350	1,910	2,860	2,030	2,090
9	2,220	1,990	512	378	388	2,640	1,630	2,350	1,930	2,860	2,050	2,060
10	2,170	2,000	499	376	387	3,090	1,340	2,100	1,490	2,860	2,060	2,060
11	2,220	1,790	390	426	353	1,960	1,420	1,280	183	2,860	2,060	2,060
12	2,330	1,980	410	390	400	1,950	1,440	1,400	564	2,860	1,940	2,060
13	2,830	1,960	408	376	367	894	1,450	1,370	720	2,840	2,000	2,060
14	2,840	1,970	397	380	371	3,010	1,360	1,380	1,340	2,860	2,000	2,050
15	2,450	1,600	424	387	502	3,000	1,410	981	1,540	2,860	2,010	2,050
16	154	846	421	701	383	1,860	1,310	1,000	1,560	2,870	2,080	2,030
17	1,760	339	1,840	594	336	424	1,450	1,000	1,400	2,880	2,070	2,040
18	1,940	339	426	694	365	1,500	1,350	903	1,370	2,880	2,060	2,040
19	1,980	342	422	712	373	731	1,340	917	1,700	2,940	2,060	2,040
20	1,870	345	589	578	371	2,200	1,350	755	2,470	2,880	2,060	2,340
21	1,840	337	588	576	370	3,050	1,370	757	2,350	2,880	2,070	2,750
22	1,830	338	582	542	362	2,460	2,340	887	2,880	2,880	2,060	3,360
23	1,940	365	557	545	454	2,800	2,380	964	2,790	2,880	2,060	3,200
24	1,850	523	439	560	435	2,960	2,350	824	2,740	2,880	2,220	3,280
25	1,930	24	447	542	434	2,860	1,930	907	2,880	2,880	2,110	3,280
26	1,840	551	452	647	449	2,860	1,470	868	2,920	2,880	2,060	3,280
27	1,940	365	386	987	424	2,860	1,480	818	2,920	2,840	2,060	3,280
28	1,950	362	394	719	445	2,880	1,460	759	2,870	1,940	2,120	3,350
29	1,900	409	449	475	540	2,890	1,450	815	2,880	2,880	2,060	3,280
30	1,900	409	445	465	------	2,780	1,790	855	2,920	2,880	2,060	3,280
31	1,970	------	370	152	------	2,860	------	2,660	------	2,880	2,060	------
TOTAL	57,674	35,094	15,001	15,167	9,430.0	70,999	57,820	43,220	63,187	88,090	66,240	73,800
MEAN	1,860	1,170	484	489	325	2,290	1,927	1,394	2,106	2,842	2,137	2,460
MAX	2,840	2,000	1,840	987	540	3,250	2,960	2,660	3,230	2,940	2,880	3,360
MIN	154	24	361	152	0	424	1,310	755	183	1,940	1,940	2,030
AC-FT	114,400	69,610	29,750	30,080	18,700	140,800	114,700	85,730	125,300	174,700	131,400	146,400

CAL YR 1971 TOTAL 669,774.0 MEAN 1,835 MAX 3,560 MIN 24 AC-FT 1,328,000
WTR YR 1972 TOTAL 595,722.0 MEAN 1,628 MAX 3,360 MIN 0 AC-FT 1,182,000

11525500 TRINITY RIVER AT LEWISTON, CALIF.

LOCATION.--Lat 40°43'10", long 122°48'09", in SW¼NW¼ sec.17, T.33 N., R.8 W., Trinity County, on right bank 400 ft upstream from Deadwood Creek, and 0.8 mile northeast of Lewiston.

DRAINAGE AREA.--719 sq mi (revised).

PERIOD OF RECORD.--August 1911 to current year.

GAGE.--Water-stage recorder. Altitude of gage is 1,810 ft (from topographic map). Prior to Oct. 16, 1930, nonrecording gage and Oct. 16, 1930, to Sept. 30, 1958, water-stage recorder, at site 1.1 miles downstream at different datum. Oct. 1, 1958, to July 6, 1964, water-stage recorder at site 0.8 mile downstream at different datum.

AVERAGE DISCHARGE (adjusted for storage, evaporation, and diversion).--61 years, 1,692 cfs (1,226,000 acre-ft per year).

EXTREMES.--Current year: Maximum discharge, 276 cfs July 29 (gage height, 3.48 ft); minimum daily, 147 cfs June 1.

Period of record: Maximum discharge, 71,600 cfs Dec. 22, 1955 (gage height, 27.3 ft, from floodmarks, site and datum then in use); minimum, 23 cfs July 30, 1924. Maximum discharge since construction of Lewiston Dam in 1960, 12,700 cfs Apr. 20, 1963 (gage height, 12.38 ft); minimum daily, 125 cfs July 8, 1969.

Flood of December 1861 reached a stage of 21.6 ft, from floodmarks, at site 1.1 miles downstream at different datum (discharge, not determined).

REMARKS.--Records good. Flow regulated by Clair Engle Lake (see sta 11525400) beginning in November 1960. Diversion to Judge Francis Carr powerplant (see sta 11525430), began in April 1963. Small diversions above head of Trinity Lake for irrigation, power, and placer mining. Records of chemical analyses and water temperatures for the current year are published in Part 2 of this report.

REVISIONS (WATER YEARS).--WSP 331: 1911-12. WSP 1181: 1949. WSP 1929: Drainage area.

DISCHARGE, IN CUBIC FEET PER SECOND, WATER YEAR OCTOBER 1971 TO SEPTEMBER 1972

DAY	OCT	NOV	DEC	JAN	FEB	MAR	APR	MAY	JUN	JUL	AUG	SEP
1	201	252	154	156	150	154	153	151	147	155	150	184
2	202	251	157	156	151	158	156	151	148	154	150	203
3	203	251	158	156	152	155	151	150	150	153	150	201
4	203	251	157	156	152	153	149	150	150	153	151	200
5	203	251	157	156	152	152	153	150	150	153	150	201
6	202	251	157	156	153	150	154	151	150	153	151	201
7	199	251	157	157	152	148	151	152	152	153	151	175
8	200	251	158	157	152	148	150	153	151	153	151	155
9	198	251	158	157	153	148	150	152	151	153	151	181
10	199	254	156	157	152	148	152	152	150	153	186	204
11	200	257	156	157	151	148	152	153	150	153	207	203
12	202	255	157	157	152	150	153	153	149	152	152	203
13	200	255	156	156	152	150	152	154	149	153	152	203
14	198	254	156	156	152	150	152	154	151	150	152	202
15	231	220	156	157	152	150	152	153	151	157	153	203
16	253	197	156	157	150	150	152	153	150	158	153	203
17	256	196	156	156	151	148	153	151	150	159	153	203
18	252	197	157	155	151	148	153	150	148	158	153	203
19	251	197	156	156	152	148	154	150	150	154	153	203
20	252	197	157	156	152	148	154	151	150	154	153	203
21	252	197	157	158	152	150	154	151	149	153	153	201
22	253	198	157	161	153	148	154	151	150	153	155	202
23	253	198	157	161	153	150	155	150	151	153	158	201
24	254	200	157	160	152	150	157	150	153	153	157	202
25	254	200	156	160	153	150	155	150	155	153	156	204
26	255	203	156	157	153	150	153	150	155	153	152	205
27	257	203	155	154	152	150	151	148	154	154	150	203
28	254	203	155	149	153	150	151	149	153	154	151	203
29	254	208	155	148	152	150	152	150	153	251	150	203
30	254	199	155	150	------	150	152	151	153	179	151	203
31	253	------	155	150	------	148	------	149	------	150	152	------
TOTAL	7,098	6,748	4,847	4,835	4,407	4,650	4,580	4,683	4,523	4,887	4,807	5,961
MEAN	229	225	156	156	152	150	153	151	151	158	155	199
MAX	257	257	158	161	153	158	157	154	155	251	207	205
MIN	198	196	154	148	150	148	149	148	147	150	150	155
AC-FT	14,080	13,380	9,610	9,590	8,740	9,220	9,080	9,290	8,970	9,690	9,530	11,820
MEAN a	89.9	531	661	2,055	2,216	5,495	2,913	3,152	1,540	330	148	-8.23
AC-FT a	5,530	31,580	40,670	126,400	127,400	337,900	173,300	193,800	91,660	20,310	9,110	-490

CAL YR 1971 TOTAL 91,018 MEAN 249 MAX 845 MIN 139 AC-FT 180,500 MEAN a 1,926 AC-FT a 1,394,000
WTR YR 1972 TOTAL 62,026 MEAN 169 MAX 257 MIN 147 AC-FT 123,000 MEAN a 1,594 AC-FT a 1,157,000

a Adjusted for change in contents, diversions, and evaporation from Clair Engle Lake. Data furnished by Bureau of Reclamation.

11526500 NORTH FORK TRINITY RIVER AT HELENA, CALIF.

LOCATION.--Lat 40°46'55", long 123°07'38", in SW¼SW¼ sec.21, T.34 N., R.11 W., Trinity County, on right bank 500 ft downstream from East Fork of North Fork Trinity River, 0.6 mile north of Helena, 1.0 mile upstream from mouth, and 6 miles northwest of Junction City.

DRAINAGE AREA.--151 sq mi.

PERIOD OF RECORD.--August 1911 to September 1913, January 1957 to current year.

GAGE.--Water-stage recorder. Altitude of gage is 1,380 ft (from topographic map). August 1911 to September 1913, at site 0.8 mile downstream at different datum.

AVERAGE DISCHARGE.--17 years, 439 cfs (318,100 acre-ft per year).

EXTREMES.--Current year: Maximum discharge, 10,000 cfs Jan. 22 (gage height, 18.01 ft); minimum daily, 26 cfs Sept. 21-24.
Period of record: Maximum discharge, 35,800 cfs Dec. 22, 1964 (gage height, 27.93 ft, from floodmarks), from rating curve extended above 9,000 cfs on basis of slope-area measurement of maximum flow; minimum daily, 7.5 cfs Sept. 26, 1964.

REMARKS.--No known regulation or diversion above station.

COOPERATION.--Records furnished by California Department of Water Resources and reviewed by Geological Survey.

REVISIONS (WATER YEARS).--WSP 1565: 1912-13.

DISCHARGE, IN CUBIC FEET PER SECOND, WATER YEAR OCTOBER 1971 TO SEPTEMBER 1972

DAY	OCT.	NOV	DEC	JAN	FEB	MAR	APR	MAY	JUN	JUL	AUG	SEP
1	47	44	363	171	436	2,250	540	385	462	248	53	30
2	44	45	321	174	403	8,340	647	416	441	234	51	30
3	50	43	286	182	393	8,010	654	434	380	227	48	31
4	56	42	247	179	384	3,810	672	472	356	202	45	30
5	50	42	322	172	372	2,550	1,030	505	398	170	43	34
6	46	40	1,060	169	372	1,900	954	494	440	142	43	32
7	43	39	612	170	378	1,610	839	451	473	130	42	30
8	40	39	459	165	378	1,420	749	394	469	108	40	29
9	38	49	537	159	375	1,390	665	354	501	102	40	29
10	36	164	521	153	365	1,450	606	352	383	95	41	29
11	35	164	437	149	359	1,390	610	368	272	94	39	28
12	34	180	401	178	359	1,420	621	410	231	96	38	35
13	32	254	330	260	365	1,580	601	472	239	102	38	32
14	31	153	312	237	390	1,360	599	537	290	98	37	31
15	32	110	288	218	396	1,210	643	525	316	100	36	30
16	33	94	262	211	409	1,240	664	486	307	101	55	28
17	33	86	250	208	400	1,250	617	425	301	100	57	28
18	33	79	253	334	390	1,160	566	358	306	94	47	27
19	36	74	252	593	310	959	521	319	299	85	43	27
20	59	79	250	802	526	835	489	419	308	77	48	27
21	46	87	251	3,140	484	760	474	396	308	70	46	26
22	41	85	330	8,550	499	911	461	335	269	66	42	26
23	58	82	320	4,810	499	816	456	316	249	63	40	26
24	53	121	333	2,050	582	840	459	335	188	63	38	26
25	46	121	346	1,380	568	886	426	359	169	64	36	27
26	45	837	306	1,000	675	783	410	403	167	62	34	94
27	60	709	261	756	1,290	702	423	459	191	61	32	211
28	48	699	228	633	4,670	641	455	505	232	58	32	75
29	43	641	208	561	3,480	593	411	525	263	57	31	55
30	47	475	188	516	------	560	381	521	267	59	31	46
31	47	------	175	478	------	539	------	499	------	54	30	------
TOTAL	1,342	5,677	10,709	28,758	20,507	53,165	17,643	13,229	9,475	3,282	1,276	1,209
MEAN	43.3	189	345	928	707	1,715	588	427	316	106	41.2	40.3
MAX	60	837	1,060	8,550	4,670	8,340	1,030	537	501	248	57	211
MIN	31	39	175	149	310	539	381	316	167	54	30	26
AC-FT	2,660	11,260	21,240	57,040	40,680	05,500	34,990	26,240	18,790	6,510	2,530	2,400

CAL YR 1971 TOTAL 190,110 MEAN 521 MAX 8,690 MIN 25 AC-FT 377,100
WTR YR 1972 TOTAL 166,272 MEAN 454 MAX 8,550 MIN 26 AC-FT 329,800

11527000 TRINITY RIVER NEAR BURNT RANCH, CALIF.

LOCATION.--Lat 40°47'20", long 123°26'20", in S½ sec.19, T.5 N., R.7 E., Trinity County, Trinity National Forest, on left bank 500 ft upstream from Cedar Flat Creek, 700 ft upstream from highway bridge at Cedar Flat, and 2.3 miles southeast of town of Burnt Ranch.

DRAINAGE AREA.--1,439 sq mi.

PERIOD OF RECORD.--October 1931 to September 1940, October 1956 to current year. Monthly discharge only for some periods, published in WSP 1315-B.

GAGE.--Water-stage recorder. Datum of gage is 944.05 ft above mean sea level. Oct. 1, 1931, to Jan. 19, 1940, at site 2 miles upstream at different datum.

AVERAGE DISCHARGE.--13 years (1931-40, 1956-60), 2,785 cfs (2,016,000 acre-ft per year); 12 years (1960-72), 1,617 cfs (1,172,000 acre-ft per year).

EXTREMES.--Current year: Maximum discharge, 25,400 cfs Mar. 3 (gage height, 17.14 ft); minimum daily, 240 cfs Aug. 31, Sept. 1.

Period of record: Maximum discharge, 81,500 cfs Feb. 25, 1958 (gage height, 30.50 ft), from rating curve extended above 40,000 cfs on basis of slope-area measurement at gage height 43.2 ft; minimum, 82 cfs Aug. 31, 1939.

Flood of Dec. 22, 1955, reached a stage of 43.2 ft, from floodmarks (discharge, 172,000 cfs, on basis of slope-area measurement of maximum flow).

REMARKS.--Records excellent. Flow regulated by Clair Engle Lake 64 miles upstream since November 1960 (see sta 11525400). Small diversions above station for mining and irrigation. Records of water temperatures for the current year are published in Part 2 of this report.

DISCHARGE, IN CUBIC FEET PER SECOND, WATER YEAR OCTOBER 1971 TO SEPTEMBER 1972

DAY	OCT	NOV	DEC	JAN	FEB	MAR	APR	MAY	JUN	JUL	AUG	SEP
1	400	458	1,010	739	1,480	6,880	1,710	1,250	1,310	798	307	240
2	382	455	898	732	1,390	14,900	1,940	1,300	1,260	750	293	248
3	385	452	907	741	1,330	20,900	1,990	1,340	1,170	730	290	290
4	397	448	811	727	1,330	11,900	1,950	1,400	1,070	691	288	288
5	400	446	777	705	1,360	8,670	2,590	1,510	1,120	639	283	331
6	391	442	2,130	714	1,350	6,690	2,640	1,520	1,230	585	278	316
7	385	440	1,600	715	1,340	5,580	2,310	1,410	1,270	561	273	304
8	379	438	1,200	710	1,340	4,750	2,080	1,300	1,360	524	270	285
9	373	459	1,200	696	1,330	4,400	1,910	1,180	1,360	502	268	245
10	367	570	1,280	682	1,320	4,440	1,780	1,150	1,290	482	268	245
11	364	604	1,120	672	1,290	4,220	1,830	1,160	973	468	270	288
12	361	732	1,090	679	1,270	4,120	1,950	1,220	851	478	340	293
13	358	835	966	810	1,270	4,610	1,890	1,350	814	485	268	301
14	352	770	900	837	1,300	4,000	1,820	1,510	887	468	263	298
15	346	617	886	808	1,320	3,390	1,870	1,560	979	475	263	290
16	370	543	828	794	1,320	3,370	1,920	1,410	961	468	275	288
17	403	490	795	789	1,300	3,430	1,840	1,360	941	464	319	283
18	409	474	793	906	1,270	3,280	1,730	1,170	951	436	304	283
19	415	461	796	1,350	1,250	2,760	1,630	1,080	929	412	290	280
20	458	456	794	1,640	1,580	2,440	1,550	1,200	937	385	293	283
21	459	468	795	5,020	1,630	2,230	1,500	1,300	959	361	290	285
22	440	470	1,090	13,400	1,770	2,500	1,470	1,140	861	352	283	285
23	466	464	1,250	13,000	1,980	2,410	1,450	1,050	822	343	275	283
24	471	493	1,170	6,540	2,540	2,360	1,460	1,060	740	334	273	283
25	453	554	1,280	4,450	2,520	2,810	1,390	1,100	689	331	273	290
26	449	1,210	1,150	3,260	2,720	2,490	1,340	1,170	681	328	268	370
27	457	2,070	1,030	2,650	3,630	2,260	1,330	1,280	707	322	255	662
28	459	1,750	924	2,200	9,290	2,080	1,390	1,360	769	325	248	529
29	450	1,700	852	1,900	10,300	1,950	1,340	1,480	811	319	245	409
30	455	1,290	800	1,710	------	1,840	1,270	1,440	829	391	243	376
31	475	------	760	1,600	------	1,770	------	1,420	------	361	240	------
TOTAL	12,729	21,059	31,882	72,176	63,120	149,430	52,870	40,180	29,536	14,568	8,596	9,451
MEAN	411	702	1,028	2,328	2,177	4,820	1,762	1,296	985	470	277	315
MAX	475	2,070	2,130	13,400	10,300	20,900	2,640	1,560	1,360	798	340	662
MIN	346	438	760	672	1,250	1,770	1,270	1,050	681	319	240	240
AC-FT	25,250	41,770	63,240	143,200	125,200	296,400	104,900	79,700	58,580	28,900	17,050	18,750

CAL YR 1971 TOTAL 670,928 MEAN 1,838 MAX 22,600 MIN 293 AC-FT 1,331,000
WTR YR 1972 TOTAL 505,597 MEAN 1,381 MAX 20,900 MIN 240 AC-FT 1,003,000

11528500 HAYFORK CREEK NEAR HYAMPOM, CALIF.

LOCATION.--Lat 40°37'34", long 123°26'01", in SE¼NW¼ sec.19, T.3 N., R.7 E., Trinity County, Trinity National Forest, on right bank 1.2 miles upstream from mouth, and 1.3 miles northeast of Hyampom.

DRAINAGE AREA.--378 sq mi.

PERIOD OF RECORD.--August 1953 to current year.

GAGE.--Water-stage recorder. Datum of gage is 1,270.67 ft above mean sea level.

AVERAGE DISCHARGE.--19 years, 526 cfs (381,100 acre-ft per year).

EXTREMES.--Current year: Maximum discharge, 6,660 cfs Mar. 3 (gage height, 10.66 ft); minimum daily, 21 cfs Sept. 18.
Period of record: Maximum discharge, 28,800 cfs Dec. 22, 1964 (gage height, 19.14 ft), from rating curve extended above 6,700 cfs on basis of slope-area measurement at gage height 18.00 ft; minimum daily, 16 cfs Aug. 26, Sept. 27, Oct. 4, 5, 1964.

REMARKS.--Records good. No regulation; diversions for irrigation of about 700 acres above station. Records of water temperatures for the current year are published in Part 2 of this report.

REVISIONS (WATER YEARS).--WSP 1395: 1954(M).

DISCHARGE, IN CUBIC FEET PER SECOND, WATER YEAR OCTOBER 1971 TO SEPTEMBER 1972

DAY	OCT	NOV	DEC	JAN	FEB	MAR	APR	MAY	JUN	JUL	AUG	SEP
1	74	62	223	212	432	2,210	550	293	129	65	37	24
2	62	62	201	208	396	3,330	530	279	125	63	36	25
3	58	60	208	208	392	5,520	500	268	124	61	36	25
4	53	60	180	198	428	3,590	480	254	119	59	35	25
5	52	60	167	208	480	2,640	505	251	114	58	34	28
6	47	58	363	205	468	2,050	515	234	111	56	33	29
7	47	58	367	201	476	1,660	510	231	109	54	32	24
8	46	58	263	201	492	1,420	488	231	118	53	32	23
9	45	62	243	198	500	1,300	468	222	128	52	32	23
10	45	77	263	191	500	1,320	452	216	143	51	30	23
11	43	85	239	191	492	1,280	496	207	131	52	30	23
12	43	113	239	194	488	1,170	620	201	122	52	30	24
13	42	139	215	247	492	1,090	615	192	115	50	30	24
14	42	148	194	271	525	987	570	186	107	48	31	23
15	42	108	205	263	540	896	585	174	100	47	31	23
16	45	92	184	259	525	830	595	171	96	45	33	22
17	46	83	170	259	500	790	565	183	94	45	35	22
18	48	77	170	287	472	740	520	174	93	44	35	21
19	49	74	167	515	464	685	488	172	90	44	35	23
20	58	68	167	684	565	640	460	191	87	43	36	22
21	58	70	170	1,720	575	605	432	214	84	42	35	23
22	56	70	304	2,400	730	685	412	196	81	42	34	23
23	63	68	480	3,260	1,020	655	388	179	80	43	32	22
24	63	72	475	1,650	1,430	715	392	171	79	42	31	23
25	60	74	500	1,180	1,170	1,130	373	163	81	41	29	23
26	56	113	376	872	1,480	926	352	158	78	39	28	55
27	56	251	322	725	1,750	806	335	150	78	38	27	145
28	55	349	275	615	2,920	730	321	145	75	39	27	103
29	55	381	255	530	3,490	670	314	139	73	39	25	74
30	56	309	235	480	------	625	300	134	69	38	24	59
31	63	------	219	456	------	580	------	131	------	37	24	------
TOTAL	1,628	3,361	8,039	19,088	24,192	42,275	14,131	6,110	3,033	1,482	979	1,026
MEAN	52.5	112	259	616	834	1,364	471	197	101	47.8	31.6	34.2
MAX	74	381	500	3,260	3,490	5,520	620	293	143	65	37	145
MIN	42	58	167	191	392	580	300	131	69	37	24	21
AC-FT	3,230	6,670	15,950	37,860	47,980	83,850	28,030	12,120	6,020	2,940	1,940	2,040

CAL YR 1971 TOTAL 210,290 MEAN 576 MAX 10,900 MIN 32 AC-FT 417,100
WTR YR 1972 TOTAL 125,344 MEAN 342 MAX 5,520 MIN 21 AC-FT 248,600

PEAK DISCHARGE (BASE, 4,000 CFS)

DATE	TIME	G.H.	DISCHARGE	DATE	TIME	G.H.	DISCHARGE
1-23	0345	8.91	4,230	3-3	0530	10.66	6,660
2-29	0130	9.17	4,520				

11528700 SOUTH FORK TRINITY RIVER BELOW HYAMPOM, CALIF.

LOCATION.--Lat 40°39'00", long 123°29'35", in NW¼SW¼ sec.10, T.3 N., R.6 E., Trinity County, Trinity National Forest, on left bank 0.3 mile downstream from Big Creek, 3.0 miles northeast of Hyampom, and 3.5 miles downstream from Hayfork Creek.

DRAINAGE AREA.--764 sq mi.

PERIOD OF RECORD.--October 1965 to current year.

GAGE.--Water-stage recorder. Datum of gage is 1,211.37 ft above mean sea level.

AVERAGE DISCHARGE.--7 years, 1,586 cfs (1,149,000 acre-ft per year).

EXTREMES.--Current year: Maximum discharge, 20,800 cfs Mar. 3 (gage height, 15.43 ft); minimum daily, 57 cfs Sept. 17-20.

Period of record: Maximum discharge, 59,100 cfs Jan. 24, 1970 (gage height, 24.62 ft), from rating curve extended above 12,000 cfs on basis of flood-routing study at gage height 30.45 ft; minimum daily, 46 cfs Oct. 6, 1970.

Flood of Dec. 22, 1964, reached a stage of 30.45 ft, from floodmarks (discharge, 88,000 cfs on basis of flood-routing study).

REMARKS.--Records good. No regulation or diversion above station. Records of water temperatures for the current year are published in Part 2 of this report.

DISCHARGE, IN CUBIC FEET PER SECOND, WATER YEAR OCTOBER 1971 TO SEPTEMBER 1972

DAY	OCT	NOV	DEC	JAN	FEB	MAR	APR	MAY	JUN	JUL	AUG	SEP
1	190	129	880	619	1,280	8,060	1,960	929	475	222	101	60
2	152	129	790	607	1,150	11,800	1,920	901	470	215	99	60
3	138	129	820	607	1,120	17,600	1,800	880	460	206	96	60
4	129	127	660	571	1,190	10,600	1,690	852	445	197	94	58
5	125	125	620	571	1,340	7,420	1,910	838	435	194	91	60
6	118	120	1,480	571	1,340	5,850	2,180	810	420	188	88	67
7	114	118	1,500	559	1,380	4,870	2,130	803	410	182	85	69
8	112	118	1,200	559	1,430	4,120	1,910	796	445	179	82	64
9	110	140	1,080	541	1,460	3,780	1,790	768	475	176	79	63
10	106	214	1,190	517	1,470	3,900	1,690	740	495	170	75	61
11	104	220	995	511	1,470	3,880	1,780	722	450	167	74	61
12	100	283	975	523	1,490	3,670	2,290	704	415	167	73	61
13	98	435	860	577	1,550	3,640	2,190	698	385	161	73	61
14	96	405	776	619	1,630	3,310	1,980	686	370	153	73	61
15	96	280	762	613	1,670	3,060	2,100	674	354	148	75	60
16	98	224	692	601	1,650	2,940	2,130	680	342	143	80	58
17	102	202	643	619	1,570	2,830	1,940	716	334	133	92	57
18	106	185	631	734	1,470	2,700	1,790	668	326	133	97	57
19	110	177	619	1,450	1,500	2,460	1,660	650	314	127	91	57
20	129	167	607	2,140	2,050	2,290	1,550	686	306	125	90	57
21	131	162	613	5,700	2,020	2,130	1,440	734	298	123	90	58
22	127	162	1,530	9,680	2,540	2,610	1,350	692	286	130	87	58
23	136	162	1,890	13,400	3,250	2,430	1,280	638	282	125	84	58
24	140	174	1,690	5,960	4,890	2,940	1,320	614	278	121	80	58
25	133	187	1,680	4,410	4,110	4,170	1,240	584	278	119	78	60
26	127	529	1,310	3,330	6,400	3,270	1,150	555	266	115	74	148
27	127	895	1,040	2,720	7,260	2,840	1,080	540	262	112	70	420
28	122	1,400	860	2,150	11,100	2,610	1,040	530	254	109	67	286
29	120	1,600	762	1,700	13,500	2,450	992	520	243	108	64	188
30	122	1,120	699	1,490	------	2,280	957	505	233	106	62	143
31	129	------	649	1,380	------	2,090	------	495	------	105	60	------
TOTAL	3,747	10,318	30,503	66,029	84,280	138,600	50,239	21,608	10,806	4,659	2,524	2,689
MEAN	121	344	984	2,130	2,906	4,471	1,675	697	360	150	81.4	89.6
MAX	190	1,600	1,890	13,400	13,500	17,600	2,290	929	495	222	101	420
MIN	96	118	607	511	1,120	2,090	957	495	233	105	60	57
AC-FT	7,430	20,470	60,500	131,000	167,200	274,900	99,650	42,860	21,430	9,240	5,010	5,330

CAL YR 1971 TOTAL 603,202 MEAN 1,653 MAX 28,400 MIN 78 AC-FT 1,196,000
WTR YR 1972 TOTAL 426,002 MEAN 1,164 MAX 17,600 MIN 57 AC-FT 845,000

PEAK DISCHARGE (BASE, 8,600 CFS)

DATE	TIME	G.H.	DISCHARGE	DATE	TIME	G.H.	DISCHARGE
1-23	0215	14.83	19,000	3-3	0700	15.43	20,800
2-29	0230	14.60	18,300				

11529800 WILLOW CREEK NEAR WILLOW CREEK, CALIF.

LOCATION.--Lat 40°56'50", long 123°39'35", in SE¼SW¼ sec.30, T.7 N., R.5 E., Humboldt County, on right bank 0.1 mile upstream from Boise Creek, 1.5 miles northwest of town of Willow Creek, and 1.8 miles upstream from mouth.

DRAINAGE AREA.--41.0 sq mi.

PERIOD OF RECORD.--August 1959 to current year. Prior to October 1960, published as "at Willow Creek."

GAGE.--Water-stage recorder. Datum of gage is 585.54 ft above mean sea level. Aug. 13, 1959, to Dec. 22, 1964, at site 1.4 miles downstream at datum 85.55 ft lower.

AVERAGE DISCHARGE.--13 years, 176 cfs (127,500 acre-ft per year).

EXTREMES.--Current year: Maximum discharge, 7,580 cfs Mar. 2 (gage height, 10.49 ft); minimum daily, 10 cfs Sept. 17-25, 30.
Period of record: Maximum discharge, 17,000 cfs Dec. 22, 1964 (gage height, 20.6 ft, present datum, from floodmarks); minimum daily, 6.8 cfs Sept. 28, 29, 1965.

REMARKS.--Records good. No regulation; small diversion for irrigation of about 40 acres above station.

DISCHARGE, IN CUBIC FEET PER SECOND, WATER YEAR OCTOBER 1971 TO SEPTEMBER 1972

DAY	OCT	NOV	DEC	JAN	FEB	MAR	APR	MAY	JUN	JUL	AUG	SEP
1	37	31	452	119	268	1,380	195	127	44	25	16	13
2	27	28	392	112	231	5,180	193	123	44	25	16	13
3	23	26	352	110	205	3,890	180	116	43	25	15	13
4	22	24	289	102	213	1,650	170	106	43	25	15	12
5	20	23	673	96	231	1,050	168	100	43	24	15	12
6	19	22	1,530	85	216	710	190	94	43	24	14	12
7	18	22	655	83	213	550	228	91	44	23	14	12
8	18	22	424	81	205	460	222	85	44	23	14	12
9	17	44	780	78	193	374	205	78	50	23	14	11
10	16	257	574	74	168	354	193	76	44	23	14	11
11	16	202	416	76	149	330	195	71	44	23	14	11
12	16	158	392	102	134	338	303	65	41	23	14	11
13	16	392	310	112	140	334	310	60	40	21	13	11
14	16	261	356	106	173	307	282	58	39	21	13	11
15	16	158	336	96	195	289	268	58	38	20	13	11
16	16	112	285	92	178	275	254	64	38	19	13	11
17	16	90	238	96	163	268	231	71	36	18	14	10
18	16	74	211	261	156	247	210	67	36	18	14	10
19	19	66	190	404	156	234	195	62	34	18	14	10
20	47	61	175	368	193	219	183	60	32	17	14	10
21	27	63	172	2,220	168	210	175	58	31	17	14	10
22	23	57	472	5,040	222	237	165	58	30	17	13	10
23	36	51	424	3,580	338	228	163	57	29	17	13	10
24	37	87	464	1,950	546	425	168	55	29	17	12	10
25	30	108	416	1,260	530	440	158	54	27	17	12	10
26	27	1,150	332	764	1,020	354	156	52	27	17	12	32
27	27	1,020	268	562	1,010	300	153	49	27	17	11	23
28	24	1,290	208	445	1,720	268	149	47	26	16	11	13
29	23	1,250	175	390	1,440	244	138	46	25	16	12	11
30	29	755	153	346	------	225	131	46	24	16	13	10
31	35	------	135	307	------	208	------	46	------	16	13	------
TOTAL	729	7,904	12,249	19,517	10,774	21,578	5,931	2,200	1,095	621	419	366
MEAN	23.5	263	395	630	372	696	198	71.0	36.5	20.0	13.5	12.2
MAX	47	1,290	1,530	5,040	1,720	5,180	310	127	50	25	16	32
MIN	16	22	135	74	134	208	131	46	24	16	11	10
AC-FT	1,450	15,680	24,300	38,710	21,370	42,800	11,760	4,360	2,170	1,230	831	726

CAL YR 1971 TOTAL 81,588 MEAN 224 MAX 2,000 MIN 13 AC-FT 161,800
WTR YR 1972 TOTAL 83,383 MEAN 228 MAX 5,180 MIN 10 AC-FT 165,400

PEAK DISCHARGE (BASE, 1,200 CFS)

DATE	TIME	G.H.	DISCHARGE	DATE	TIME	G.H.	DISCHARGE
11-26	1615	6.62	2,310	2-28	1815	7.13	2,470
12-5	2315	7.27	2,950	3-2	2145	10.49	7,580
1-22	1815	10.30	7,240				

11530000 TRINITY RIVER AT HOOPA, CALIF.

LOCATION.--Lat 41°03'00", long 123°40'15", in SE¼NW¼ sec.25, T.8 N., R.4 E., Humboldt County, in Hoopa Valley Indian Reservation, on left bank at Hoopa, 0.4 mile upstream from Supply Creek.

DRAINAGE AREA.--2,854 sq mi.

PERIOD OF RECORD.--October 1911 to January 1914, October 1916 to September 1918, October 1931 to current year. Monthly discharge only for some periods, published in WSP 1315-B. Published as "near Hoopa" 1931-60.

GAGE.--Water-stage recorder. Datum of gage is 274.82 ft above mean sea level. Prior to October 1931, nonrecording gage at site 0.4 mile upstream at different datum. October 1931 to Dec. 22, 1964, water-stage recorder at site 2.5 miles upstream at datum 31.67 ft higher.

AVERAGE DISCHARGE (unadjusted).--45 years (1911-13, 1916-18, 1931-72), 5,410 cfs (3,920,000 acre-ft per year).

EXTREMES.--Current year: Maximum discharge, 97,700 cfs Mar. 3 (gage height, 37.53 ft); minimum, 461 cfs Sept. 2, 10.
Period of record: Maximum discharge, 231,000 cfs Dec. 22, 1964 (gage height, 57.0 ft, from floodmarks, present site and datum); minimum, 162 cfs Oct. 4, 1931.

REMARKS.--Records good. Flow regulated by Clair Engle Lake 84 miles upstream since November 1960 (see sta 11525400). Small diversions above station for mining and irrigation. Records of chemical analyses, water temperatures and suspended-sediment discharge for the current year are published in Part 2 of this report.

REVISIONS (WATER YEARS).--WSP 1565: 1913. WRD Calif. 1970: 1969.

DISCHARGE, IN CUBIC FEET PER SECOND, WATER YEAR OCTOBER 1971 TO SEPTEMBER 1972

DAY	OCT	NOV	DEC	JAN	FEB	MAR	APR	MAY	JUN	JUL	AUG	SEP
1	1,070	873	4,760	2,730	5,850	33,300	5,650	3,440	2,670	1,370	638	466
2	906	842	3,960	2,640	5,330	62,600	6,010	3,440	2,520	1,300	604	461
3	842	830	3,830	2,610	4,940	85,200	5,990	3,510	2,410	1,250	593	483
4	824	812	3,350	2,650	4,960	55,000	5,730	3,570	2,220	1,200	582	499
5	824	800	3,960	2,550	5,160	40,100	6,680	3,700	2,170	1,140	576	505
6	794	794	11,600	2,570	4,960	30,400	7,830	3,680	2,280	1,090	560	554
7	758	788	7,750	2,490	4,890	23,400	7,280	3,510	2,360	1,030	549	532
8	728	782	4,980	2,380	4,870	18,800	6,550	3,350	2,450	1,000	543	527
9	710	860	5,650	2,240	4,820	16,300	5,930	3,060	2,540	971	538	488
10	692	2,220	5,850	2,170	4,710	15,900	5,570	2,940	2,910	951	521	461
11	668	1,960	4,910	2,160	4,570	15,300	5,630	2,890	2,260	932	521	477
12	656	1,970	4,820	2,240	4,440	14,400	7,130	2,940	1,930	932	549	499
13	644	3,060	4,200	2,470	4,440	14,800	7,130	3,100	1,770	919	560	510
14	638	3,020	3,920	2,680	4,660	13,300	6,530	3,300	1,740	919	516	516
15	626	1,940	3,880	2,570	4,800	11,600	6,680	3,360	1,840	893	516	516
16	626	1,540	3,410	2,530	4,620	11,000	6,850	3,220	1,840	893	532	505
17	668	1,320	3,130	2,570	4,480	10,900	6,510	3,330	1,790	873	587	499
18	686	1,200	3,030	3,380	4,280	10,400	5,870	2,920	1,760	854	615	488
19	722	1,130	2,960	5,610	4,160	9,200	5,490	2,660	1,720	824	598	488
20	893	1,100	2,890	7,200	5,490	8,250	4,940	2,800	1,680	794	587	488
21	886	1,100	2,870	23,700	5,710	7,600	4,710	3,240	1,690	770	587	488
22	834	1,090	5,260	58,700	6,350	8,450	4,530	2,980	1,610	746	576	494
23	873	1,050	7,400	64,500	7,880	8,550	4,440	2,680	1,520	734	560	494
24	932	1,170	6,330	36,000	11,200	9,150	4,620	2,570	1,460	716	549	494
25	873	1,380	6,410	23,600	10,400	11,600	4,330	2,560	1,370	698	538	499
26	842	5,950	5,240	16,200	15,800	9,680	4,080	2,610	1,320	686	532	632
27	842	10,400	4,420	11,700	20,300	8,250	3,880	2,750	1,310	674	516	1,150
28	842	10,500	3,800	9,580	36,900	7,150	3,910	2,850	1,340	656	499	1,150
29	812	10,200	3,410	7,950	47,000	6,630	3,780	2,980	1,380	650	483	860
30	824	7,200	3,130	6,850	------	6,130	3,570	2,910	1,390	656	477	740
31	886	------	2,880	6,250	------	5,830	------	2,850	------	710	472	------
TOTAL	24,421	77,881	143,990	323,470	257,970	589,170	167,830	95,700	57,250	27,831	17,074	16,963
MEAN	788	2,596	4,645	10,430	8,896	19,010	5,594	3,087	1,908	898	551	565
MAX	1,070	10,500	11,600	64,500	47,000	85,200	7,830	3,700	2,910	1,370	638	1,150
MIN	626	782	2,870	2,160	4,160	5,830	3,570	2,560	1,310	650	472	461
AC-FT	48,440	154,500	285,600	641,600	511,700	1,169M	332,900	189,800	113,600	55,200	33,870	33,650

CAL YR 1971 TOTAL 2,150,778 MEAN 5,893 MAX 88,200 MIN 530 AC-FT 4,266,000
WTR YR 1972 TOTAL 1,799,550 MEAN 4,917 MAX 85,200 MIN 461 AC-FT 3,569,000

PEAK DISCHARGE (BASE, 22,000 CFS)

DATE	TIME	G.H.	DISCHARGE	DATE	TIME	G.H.	DISCHARGE
1-23	0145	34.58	76,900	3-3	0330	37.53	97,700
2-29	0515	30.55	53,500				

11530300 BLUE CREEK NEAR KLAMATH, CALIF.

LOCATION.--Lat 41°27'00", long 123°53'40", in NE¼NW¼ sec.12, T.12 N., R.2 E., Humboldt County, on left bank 600 ft downstream from West Fork, 3.0 miles upstream from mouth, and 9.2 miles southeast of Klamath.

DRAINAGE AREA.--120 sq mi.

PERIOD OF RECORD.--September 1965 to current year.

GAGE.--Water-stage recorder. Datum of gage is 140.65 ft above mean sea level.

AVERAGE DISCHARGE.--7 years, 802 cfs (581,000 acre-ft per year).

EXTREMES.--Current year: Maximum discharge, 33,000 cfs Mar. 2 (gage height, 18.10 ft); minimum daily, 63 cfs Sept. 16-18.

Period of record: Maximum discharge, 33,000 cfs Mar. 2, 1972 (gage height, 18.10 ft), from rating curve extended above 1,000 cfs on basis of step-backwater computation at 21.55 ft; minimum daily, 43 cfs Nov. 1, 1965.

Flood of Dec. 22, 1964, reached a stage of 21.55 ft, from floodmarks (discharge, 48,000 cfs, by step-backwater computation).

REMARKS.--Records good. No regulation or diversion above station. Records of water temperatures for the current year are published in Part 2 of this report.

DISCHARGE, IN CUBIC FEET PER SECOND, WATER YEAR OCTOBER 1971 TO SEPTEMBER 1972

DAY	OCT	NOV	DEC	JAN	FEB	MAR	APR	MAY	JUN	JUL	AUG	SEP
1	218	121	1,880	695	890	8,100	1,050	742	270	151	95	70
2	163	117	1,610	695	820	20,000	1,110	730	259	149	95	70
3	147	107	1,450	680	750	12,000	1,030	724	249	147	93	70
4	139	102	1,350	625	740	8,000	1,000	712	238	145	93	69
5	123	98	2,950	586	880	6,000	1,070	682	230	138	91	69
6	111	95	4,330	566	1,020	4,000	1,500	628	222	138	91	69
7	104	98	2,710	550	1,100	3,000	1,590	646	214	136	88	69
8	99	96	2,080	534	1,010	2,200	1,470	605	209	136	88	67
9	96	228	2,880	518	930	2,000	1,360	560	295	136	85	66
10	93	1,090	2,460	502	870	1,900	1,230	540	255	131	85	66
11	92	640	2,030	562	810	1,800	1,170	515	275	127	85	66
12	90	458	2,110	745	760	5,380	1,620	505	234	127	84	66
13	89	1,140	1,810	752	940	9,350	1,290	495	219	125	84	66
14	86	850	1,880	655	1,040	7,050	1,220	480	217	122	84	66
15	86	590	1,730	598	930	3,900	1,220	455	208	122	84	66
16	86	478	1,490	594	850	2,590	1,200	505	205	116	85	63
17	85	386	1,340	665	900	2,320	1,110	610	200	116	91	63
18	84	341	1,280	1,550	840	2,110	1,040	545	194	111	88	63
19	119	305	1,190	1,880	800	1,620	983	470	189	111	85	67
20	188	285	1,110	2,850	1,360	1,540	941	440	184	111	85	70
21	119	270	1,050	8,800	1,130	1,460	913	465	179	111	85	67
22	104	248	1,650	24,000	1,500	1,930	857	410	179	109	82	75
23	117	255	1,570	11,000	2,700	1,570	864	428	176	105	81	70
24	119	582	1,480	5,600	2,300	1,830	990	392	174	105	78	67
25	107	574	1,350	3,410	1,950	1,700	934	370	174	105	78	64
26	105	3,930	1,150	2,400	3,980	1,470	892	355	169	105	78	98
27	115	3,180	1,020	1,820	6,800	1,370	913	336	167	105	75	96
28	105	3,400	905	1,410	11,500	1,280	906	322	162	102	75	79
29	99	3,580	855	1,220	8,000	1,170	820	338	160	98	75	72
30	111	2,560	780	1,090	------	1,100	772	308	156	98	73	69
31	129	------	720	980	------	1,040	------	290	------	96	70	------
TOTAL	3,528	26,204	52,200	78,532	58,100	120,800	32,865	15,603	6,262	3,734	2,609	2,098
MEAN	114	873	1,684	2,533	2,003	3,897	1,096	503	209	120	84.2	69.9
MAX	218	3,930	4,330	24,000	11,500	20,000	1,590	742	295	151	95	98
MIN	84	95	720	502	740	1,040	772	290	156	96	70	63
AC-FT	7,000	51,980	103,500	155,800	115,200	239,600	65,190	30,950	12,420	7,410	5,170	4,160

CAL YR 1971 TOTAL 343,593 MEAN 941 MAX 10,700 MIN 77 AC-FT 681,500
WTR YR 1972 TOTAL 402,535 MEAN 1,100 MAX 24,000 MIN 63 AC-FT 798,400

PEAK DISCHARGE (BASE, 5,000 CFS)

DATE	TIME	G.H.	DISCHARGE	DATE	TIME	G.H.	DISCHARGE
11-26	1530	8.80	5,800	2-28	unknown	-	18,000
12-5	2115	8.90	6,000	3-2	1915	18.10	33,000
1-22	1145	18.00	32,600	3-13	0615	13.12	10,200

NOTE.--No gage-height record Jan. 22 to Mar. 2.

11530500 KLAMATH RIVER NEAR KLAMATH, CALIF.
(International Hydrological Decade River Station)

LOCATION.--Lat 41°30'45", long 123°58'30", in SW¼ sec.17, T.13 N., R.2 E., Del Norte County, on right bank 2.8 miles upstream from Turwar Creek, and 3.3 miles east of Klamath.

DRAINAGE AREA.--12,100 sq mi, approximately (not including Lost River or Lower Klamath Lake basins).

PERIOD OF RECORD.--October 1910 to December 1926 (published as "near Requa"), October 1950 to current year. Monthly discharge only for some periods, published in WSP 1315-B.

GAGE.--Water-stage recorder. Datum of gage is 5.60 ft above mean sea level (levels by Corps of Engineers). Prior to June 1926, nonrecording gage at same site at different datum.

AVERAGE DISCHARGE.--38 years, 17,460 cfs (12,650,000 acre-ft per year).

EXTREMES.--Current year: Maximum discharge, 360,000 cfs Mar. 3 (gage height, 37.89 ft); minimum daily, 2,360 cfs Sept. 1.
Period of record: Maximum discharge, 557,000 cfs Dec. 23, 1964 (gage height, 55.3 ft, from floodmarks), from rating curve extended above 230,000 cfs on basis of flood-routing study; minimum observed, 1,340 cfs July 31, Aug. 1, 1924.

REMARKS.--Records fair. Flow considerably regulated by reservoirs and powerplants above station. Large diversions for irrigation above station. Records of chemical analyses and water temperatures for the current year are published in Part 2 of this report.

REVISIONS (WATER YEARS).--WSP 1285: 1951(P). WSP 1445: 1918-20.

DISCHARGE, IN CUBIC FEET PER SECOND, WATER YEAR OCTOBER 1971 TO SEPTEMBER 1972

DAY	OCT	NOV	DEC	JAN	FEB	MAR	APR	MAY	JUN	JUL	AUG	SEP
1	6,000	6,040	29,000	14,400	26,300	115,000	27,200	17,400	15,100	5,310	2,660	2,360
2	5,700	5,950	22,600	14,000	23,500	222,000	27,600	16,900	13,700	5,100	2,600	2,620
3	5,450	5,850	20,900	13,800	21,200	317,000	27,800	16,300	12,400	4,860	2,880	2,800
4	5,200	5,730	19,800	13,500	20,700	184,000	26,500	16,800	11,400	4,730	2,900	2,870
5	5,000	5,700	23,800	12,900	20,800	131,000	27,300	17,800	10,900	4,600	2,880	2,900
6	4,800	5,650	51,800	12,600	20,300	104,000	34,100	18,100	11,000	4,400	2,830	3,000
7	4,550	5,630	41,000	12,400	19,600	90,700	33,800	17,500	11,100	4,250	2,720	2,960
8	4,420	5,630	30,900	12,200	19,200	81,300	30,500	16,700	11,400	4,130	2,680	2,920
9	4,360	5,800	31,000	11,700	19,100	75,600	27,900	15,300	11,500	4,050	2,660	2,900
10	4,660	17,100	33,200	11,400	18,600	73,400	25,500	14,700	12,300	3,950	2,640	3,000
11	5,120	19,500	30,800	11,300	18,200	74,100	24,200	14,400	11,300	3,850	2,600	3,030
12	5,090	13,000	29,200	12,000	17,800	72,500	28,300	14,500	9,940	3,800	2,560	3,090
13	5,040	15,000	28,500	12,400	18,000	78,500	29,900	15,500	8,860	3,750	2,620	3,300
14	5,020	13,000	25,900	12,700	18,700	71,500	28,000	18,500	8,400	3,680	2,580	3,330
15	5,040	11,400	25,200	12,800	18,900	62,500	27,900	20,000	8,400	3,600	2,580	3,330
16	5,100	10,500	23,300	12,300	18,500	59,000	28,400	19,600	8,370	3,500	2,620	3,320
17	5,150	10,000	20,600	12,200	18,600	57,000	27,400	19,900	8,090	3,400	2,930	3,310
18	5,200	9,580	19,200	15,300	18,600	55,300	25,700	17,900	7,840	3,330	3,050	3,300
19	5,500	9,210	18,300	22,900	18,400	50,200	24,100	15,900	7,600	3,230	2,900	3,300
20	6,200	8,980	17,800	28,800	22,600	44,800	22,800	15,100	7,350	3,130	2,800	3,310
21	5,900	8,960	17,300	91,300	23,400	40,300	21,900	16,100	7,210	3,050	2,900	3,340
22	5,600	8,950	19,400	267,000	25,200	43,700	21,400	15,600	7,040	2,980	2,830	3,400
23	5,840	8,790	25,900	250,000	29,800	45,000	21,000	14,600	6,620	2,980	2,720	3,470
24	5,840	9,620	24,900	130,000	38,900	44,100	20,700	14,600	6,340	2,930	2,660	3,470
25	5,700	11,100	25,400	85,500	38,100	45,900	20,200	14,500	6,060	2,900	2,620	3,490
26	5,600	28,000	23,200	65,200	46,200	42,100	19,700	14,500	5,820	2,850	2,600	3,850
27	5,700	54,000	20,800	51,700	60,000	38,400	19,200	15,400	5,670	2,800	2,540	4,600
28	5,970	47,500	18,500	41,100	121,000	35,700	19,500	16,600	5,550	2,740	2,480	4,500
29	5,840	47,500	17,300	35,600	148,000	33,100	19,000	17,800	5,460	2,720	2,440	4,050
30	5,830	42,000	16,400	31,500	------	30,400	18,000	17,700	5,460	2,680	2,400	3,850
31	6,020	------	15,100	28,800	------	28,500	------	16,600	------	2,700	2,380	------
TOTAL	166,440	455,670	767,000	1,359.3M	928,200	2,446.6M	755,500	512,800	268,180	111,980	83,260	98,970
MEAN	5,369	15,190	24,740	43,850	32,010	78,920	25,180	16,540	8,939	3,612	2,686	3,299
MAX	6,200	54,000	51,800	267,000	148,000	317,000	34,100	20,000	15,100	5,310	3,050	4,600
MIN	4,360	5,630	15,100	11,300	17,800	28,500	18,000	14,400	5,460	2,680	2,380	2,360
AC-FT	330,100	903,800	1,521M	2,696M	1,841M	4,853M	1,499M	1,017M	531,900	222,100	165,100	196,300

CAL YR 1971 TOTAL 8,467,610 MEAN 23,200 MAX 260,000 MIN 3,360 AC-FT 16,800,000
WTR YR 1972 TOTAL 7,953,900 MEAN 21,730 MAX 317,000 MIN 2,360 AC-FT 15,780,000

PEAK DISCHARGE (BASE, 90,000 CFS)

DATE	TIME	G.H.	DISCHARGE	DATE	TIME	G.H.	DISCHARGE
1-22	1800	35.49	322,000	3-3	0430	37.89	360,000
2-29	0815	25.16	159,000				

NOTE.--No gage-height record Aug. 31 to Sept. 30.

11532500 SMITH RIVER NEAR CRESCENT CITY, CALIF.

LOCATION.--Lat 41°47'22", long 124°03'14", in SW¼SW¼ sec.10, T.16 N., R.1 E., (unsurveyed), Del Norte County, Six Rivers National Forest, on left bank 0.5 mile downstream from South Fork, and 8 miles east of Crescent City.

DRAINAGE AREA.--609 sq mi.

PERIOD OF RECORD.--October 1931 to current year. Monthly discharge only for some periods, published in WSP 1315-B.

GAGE.--Water-stage recorder and crest-stage gage. Datum of gage is 89.61 ft above mean sea level.

AVERAGE DISCHARGE.--41 years, 3,846 cfs (2,786,000 acre-ft per year).

EXTREMES.--Current year: Maximum discharge, 182,000 cfs Jan. 22 (gage height, 43.37 ft); minimum daily, 200 cfs Sept. 16-18.
Period of record: Maximum discharge, 228,000 cfs Dec. 22, 1964 (gage height, 48.5 ft, from floodmarks), from rating curve extended above 69,000 cfs on basis of slope-area measurement at gage height 39.51 ft; minimum daily, 160 cfs Oct. 24, 25, 1964.

REMARKS.--Records excellent. No regulation or diversion above station. Records of chemical analyses and water temperatures for the current year are published in Part 2 of this report.

DISCHARGE, IN CUBIC FEET PER SECOND, WATER YEAR OCTOBER 1971 TO SEPTEMBER 1972

DAY	OCT	NOV	DEC	JAN	FEB	MAR	APR	MAY	JUN	JUL	AUG	SEP
1	1,480	686	8,960	3,020	4,400	29,100	3,250	2,450	1,020	510	316	232
2	1,100	754	7,210	3,030	4,020	123,000	3,570	2,350	989	500	316	228
3	935	718	6,890	2,930	3,720	69,300	3,330	2,300	961	495	308	224
4	880	658	6,660	2,690	3,760	24,300	3,170	2,280	926	490	300	224
5	794	610	19,600	2,490	4,490	15,300	4,150	2,220	898	480	300	224
6	690	566	30,100	2,330	5,150	11,300	10,300	2,100	870	470	296	224
7	618	602	12,700	2,260	5,640	9,070	11,900	2,040	846	475	288	224
8	566	606	8,200	2,190	5,070	7,530	9,260	1,920	828	465	288	224
9	531	1,550	13,700	2,210	4,730	6,900	7,770	1,780	891	465	284	216
10	503	13,700	12,300	2,320	4,340	7,240	6,170	1,700	912	460	276	212
11	485	9,020	9,080	2,990	4,030	11,300	5,240	1,640	1,050	450	272	212
12	464	6,140	11,200	5,750	3,800	12,600	7,560	1,610	919	445	268	212
13	444	14,500	8,300	4,850	4,890	17,800	6,870	1,630	828	435	268	212
14	429	9,000	8,220	3,800	5,030	11,200	5,660	1,610	786	425	268	212
15	423	6,000	7,980	3,230	4,640	8,340	5,190	1,530	762	401	268	208
16	420	3,900	6,190	2,980	4,290	7,070	4,760	1,600	750	397	296	200
17	408	2,700	5,240	3,180	4,330	6,190	4,150	1,840	726	388	361	200
18	402	2,040	4,840	9,620	4,150	5,580	3,690	1,630	708	383	316	200
19	524	1,850	4,450	11,100	4,170	4,800	3,340	1,480	678	383	296	228
20	1,120	1,690	4,060	25,100	6,820	4,170	3,080	1,440	660	379	288	240
21	766	1,600	3,830	89,700	5,480	4,020	2,940	1,500	648	365	296	244
22	638	1,550	10,500	144,000	7,360	9,160	2,790	1,450	636	361	288	288
23	622	1,610	10,800	60,300	13,500	8,250	2,710	1,390	618	361	280	284
24	678	5,470	9,640	24,300	12,500	6,830	3,430	1,340	618	361	272	264
25	606	4,900	8,100	15,900	9,740	6,310	3,670	1,270	612	361	264	244
26	590	34,800	6,100	11,600	19,200	5,400	3,370	1,230	594	356	260	272
27	650	24,300	4,930	8,950	32,500	4,740	3,270	1,200	582	352	248	356
28	606	25,300	4,120	7,160	52,900	4,220	3,270	1,180	564	343	244	300
29	559	27,200	3,630	6,120	30,400	3,800	2,890	1,140	546	334	240	260
30	583	15,300	3,400	5,400	------	3,460	2,620	1,090	534	329	240	244
31	714	------	3,150	4,880	------	3,200	------	1,060	------	320	236	------
TOTAL	20,228	219,320	264,080	476,380	275,050	451,480	143,370	51,000	22,960	12,739	8,741	7,112
MEAN	653	7,311	8,519	15,370	9,484	14,560	4,779	1,645	765	411	282	237
MAX	1,480	34,800	30,100	144,000	52,900	123,000	11,900	2,450	1,050	510	361	356
MIN	402	566	3,150	2,190	3,720	3,200	2,620	1,060	534	320	236	200
AC-FT	40,120	435,000	523,800	944,900	545,600	895,500	284,400	101,200	45,540	25,270	17,340	14,110

CAL YR 1971 TOTAL 1,766,972 MEAN 4,841 MAX 106,000 MIN 278 AC-FT 3,505,000
WTR YR 1972 TOTAL 1,952,460 MEAN 5,335 MAX 144,000 MIN 200 AC-FT 3,873,000

PEAK DISCHARGE (BASE, 36,000 CFS)

DATE	TIME	G.H.	DISCHARGE	DATE	TIME	G.H.	DISCHARGE
11-26	1630	26.95	57,700	2-28	0145	28.61	67,700
12-5	2345	27.26	59,600	3-2	2015	42.22	173,000
1-22	0700	43.37	182,000				

As the number of streams on which streamflow information is likely to be desired far exceeds the number of stream-gaging stations feasible to operate at one time, the Geological Survey collects limited streamflow data at sites other than stream-gaging stations. When limited streamflow data are collected on a systematic basis over a period of years for use in hydrologic analyses, the site at which the data are collected is called a partial-record station. Data collected at these partial-record stations are usable in low-flow or flood-flow analyses, depending on the type of data collected. In addition, discharge measurements are made at other sites not included in the partial-record program. These measurements are generally made in times of drought or flood to give better areal coverage to those events. Those measurements and others collected for some special reason are called measurements at miscellaneous sites.

Records collected at partial-record stations are presented in two tables. The first is a table of discharge measurements at low-flow partial-record stations and the second is a table of annual maximum discharge at crest-stage stations. Discharge measurements made at miscellaneous sites for both low flow and high flow are given in a third table.

Low-flow partial-record stations

Measurements of streamflow in the area covered by this report made at low-flow partial-record stations are given in the following table. Most of these measurements were made during periods of base flow when streamflow is primarily from ground-water storage. These measurements, when correlated with the simultaneous discharge of a nearby stream where continuous records are available, will give a picture of the low-flow potentiality of the stream. The column headed "Period of record" shows the water years in which measurements were made at the same or practically the same site.

Discharge measurements made at low-flow partial-record stations during water year 1972

Station No.	Station name	Location	Drainage area (sq mi)	Period of record	Measurements	
					Date	Discharge (cfs)
		SALINAS RIVER BASIN				
11147030	Cienega Creek near Templeton	Lat 35°31'39", long 120°51'23", in Asuncion Grant, San Luis Obispo County, 0.4 mile upstream from mouth, and 9.1 miles west of Templeton.	2.51	1967-72	12-08-71 1-12-72 5-16-72 8-10-72	0.08 .52 .26 .10
11147060	South Fork Santa Rita Creek near Templeton	Lat 35°30'48", long 120°48'01", in Asuncion Grant, San Luis Obispo County, 1.1 miles upstream from mouth, and 6.0 miles west of Templeton.	3.02	1968-72	12-08-71 1-12-72 5-16-72	0 .05 .01
		NAPA RIVER BASIN				
11458120	Milliken Creek tributary near Napa	Lat 38°20'06", long 122°16'46", in Yajome Grant, Napa County, at upstream side of bridge, 0.7 mile upstream from mouth, and 2.6 miles north of Napa.	2.54	1971-72	1-04-72 6-12-72	<1.0 0
11458150	Sarco Creek near Napa	Lat 38°19'56", long 122°15'06", in Tulucay Grant, Napa County, at culvert on Vichy Avenue, 3 miles northwest of Napa.	3.56	1971-72	6-12-72	0
		MAD RIVER BASIN				
11480390	Mad River above Ruth Reservoir, near Forest Glen	Lat 40°18'51", long 123°21'44", in NW¼NW¼ sec.11, T.2 S., R.7 E., Trinity County, Six Rivers National Forest, at bridge on Zenia Road, 0.5 mile southeast of Ruth, and 4.6 miles southwest of Forest Glen.	103	1971-72	10-26-71 11-16-71 12-21-71 7-21-72	2.08 19.2 96.4 3.65
11480410	Mad River below Ruth Reservoir, near Forest Glen	Lat 40°21'30", long 123°25'27", in SW¼SE¼ sec.19, T.1 N., R.7 E., Trinity County, Six Rivers National Forest, 1,200 ft downstream from Ruth Dam, 4.1 miles northwest of Ruth, and 5.3 miles southwest of Forest Glen.	119	1971-72	10-27-71 11-16-71 12-21-71 7-21-72	105 99.1 108 60.6

Crest-stage partial-record stations

As explained on page 10 the California district publishes annual maxima on small streams at about 304 sites in a separate publication Floods From Small Drainage Areas. In addition, discharge measurements are generally made in times of drought or flood to give better coverage to those events. Those measurements and others collected for some special reason are called measurements at miscellaneous sites.

The following table contains annual maximum discharges for crest-stage stations not included in the above-mentioned report. A crest-stage gage is a device which will register the peak stage occurring between inspections of the gage. A stage-discharge relation for each gage is developed from discharge measurements made by indirect measurements of peak flow or by current meter. The date of the maximum discharge is not always certain but is usually determined by comparison with nearby continuous-record stations, weather records, or local inquiry. Only the maximum discharge for the current water year is given. Information on some lower floods may have been obtained but is not published herein. The years given in the period of record represent water years for which the annual maximum has been obtained.

Annual maximum discharge at crest-stage partial-record stations during water year 1972

Station No.	Station name	Location	Drainage area (sq mi)	Period of record	Annual maximum		
					Date	Gage height (feet)	Discharge (cfs)
		DALE LAKE BASIN					
10253320	Quail Wash near Joshua Tree	Lat 34°07'04", long 116°18'27", in SW¼NW¼NE¼ sec.1, T.1 S., R.6 E., San Bernardino County, on right bank 0.2 mile downstream from Coyote Hole Spring, and 1.1 miles south of Joshua Tree.	100	1964-71a 1972			0
10253350	Fortynine Palms Creek near Twentynine Palms	Lat 34°07'12", long 116°05'43", (unsurveyed), San Bernardino County, in Joshua Tree National Monument, on left bank 50 ft upstream from North Monument boundary, 1.1 miles downstream from Fortynine Palms Oasis, and 2.6 miles southwest of Twentynine Palms.	8.55	1962-71a 1972			0
		SALTON SEA BASIN					
10257800	Long Creek near Desert Hot Springs	Lat 33°57'53", long 116°26'35", in NW¼SE¼SE¼ sec.27, T.2 S., R.5 E., Riverside County, on left bank 0.4 mile downstream from Metropolitan Water District aqueduct, and 3.3 miles east of Desert Hot Springs.	19.4	1963-71a 1972			0
		EMERSON LAKE BASIN					
10260200	Pipes Creek near Yucca Valley	Lat 34°10'19", long 116°32'45", in NE¼SE¼NE¼ sec.15, T.1 N., R.4 E., San Bernardino County, on left bank 2.8 miles upstream from Antelope Wash, and 6.8 miles northwest of Yucca Valley.	15.1	1958-71a 1972			0
		LUCERNE DRY LAKE BASIN					
10260400	Cushenbury Creek near Lucerne Valley	Lat 34°21'52", long 116°50'42", in NE¼SW¼NE¼ sec.14, T.3 N., R.1 E., San Bernardino County, in San Bernardino National Forest, on right bank 0.3 mile upstream from forest boundary, and 9 miles southeast of Lucerne Valley.	6.36	1957-71a 1972			0
		INDIAN WELLS VALLEY					
10264878	Ninemile Creek near Brown	Lat 35°50'35", long 117°55'35", (unsurveyed), Inyo County, on left bank 600 ft upstream from Los Angeles aqueduct, and 6.4 miles northwest of Brown.	10.4	1961-71a 1972	12-24-71	3.65	2.2

See footnotes at end of table.

Crest-stage partial-record stations--Continued

Annual maximum discharge at crest-stage partial-record stations during water year 1972

Station No.	Station name	Location	Drainage area (sq mi)	Period of record	Annual maximum		
					Date	Gage height (feet)	Discharge (cfs)
		SALINAS RIVER BASIN					
11147030	Cienega Creek[1/] near Templeton	Lat 35°31'39", long 120°51'23", in Asuncion Grant, San Luis Obispo County, 0.4 mile upstream from mouth, and 9.1 miles west of Templeton.	2.51	1967-72	12-26-72	52.56	74
		NAPA RIVER BASIN					
11458120	Milliken Creek[1/] tributary near Napa	Lat 38°20'06", long 122°16'46", in Yajome Grant, Napa County, on right bank at upstream side of bridge, 0.7 mile upstream from mouth, and 2.6 miles north of Napa.	2.54	1972	12-22-71	51.43	29
11458140	Milliken Creek at Napa	Lat 38°19'31", long 122°16'24", in Yajome Grant, Napa County, on right bank at upstream side of West Trancas Road bridge, at Napa, and 0.7 mile upstream from mouth.	20.8	1971-72	--	(b)	--
11458150	Sarco Creek[1/] near Napa	Lat 38°19'56", long 122°15'06", in Tulucay Grant, Napa County, on left bank at culvert on Vichy Avenue, 3 miles northwest of Napa.	3.56	1971-72	12-26-71	50.07	120
		SAN RAFAEL CREEK BASIN					
11459790	San Rafael Creek at Sirard Lane, at San Rafael	Lat 37°59'04", long 122°32'58", in San Pedro Santa Margarita Las Gallinas Grant, Marin County, on left bank on upstream wingwall of culvert on Sirard Lane in San Rafael.	0.19	1972	2-05-72	49.90	12
11459810	Irwin Creek tributary at San Rafael	Lat 37°59'28", long 122°30'29", in San Pedro Santa Margarita Las Gallinas Grant, Marin County, on right bank at end of Cascade Lane in Black Canyon in San Rafael.	.11	1972	--	(b)	--
11459820	Irwin Creek tributary No. 2 at San Rafael	Lat 37°58'56", long 122°30'24", in San Pedro Santa Margarita Las Gallinas Grant, Marin County, on right bank at upstream side of culvert on Deer Park Road at San Rafael.	.16	1972	--	(b)	--
		RUSSIAN RIVER BASIN					
11460940	Russian River near Redwood Valley	Lat 39°19'10", long 123°13'20", in NW¼sec.20, T.17 N., R.12 W., Mendocino County, on left bank 600 ft upstream from Rocky Creek, and 3.8 miles north of town of Redwood Valley.	14.1	1964-68a 1969-72	1-22-72	6.35	1,160
11463940	Franz Creek near Kellogg	Lat 38°36'30", long 122°45'35", in Mallacomes Grant, Sonoma County, on left bank at downstream side of highway bridge, 100 ft downstream from Bidwell Creek, and 2 miles south of Kellogg.	15.7	1956 1958-62 1963-68a 1969-72	2-22-72	3.31	173

See footnotes at end of table.

Crest-stage partial-record stations--Continued

Annual maximum discharge at crest-stage partial-record stations during water year 1972

Station No.	Station name	Location	Drainage area (sq mi)	Period of record	Annual maximum		
					Date	Gage height (feet)	Discharge (cfs)
		ALBION RIVER BASIN					
11468010	Albion River near Comptche	Lat 39°15'40", long 123°37'00", in SW¼ sec.11, T.16 N., R.16 W., Mendocino County, on right bank 2,000 ft downstream from Morrison Gulch, and 1.7 miles west of Comptche.	14.4	1961-69a 1970-72	12-22-71	5.68	340
		EEL RIVER BASIN					
11475500	South Fork Eel River near Branscomb	Lat 39°43'09", long 123°39'06", in NW¼ sec.32, T.22 N., R.16 W., Mendocino County, on right bank 0.4 mile upstream from Jack of Hearts Creek, and 4.7 miles north of Branscomb.	43.9	1946-70a 1972	1-22-72	12.93	12,300
		JACOBY CREEK BASIN					
11480000	Jacoby Creek near Freshwater	Lat 40°47'30", long 124°00'10", in NW¼ sec.30, T.5 N., R.2 E., Humboldt County, 3.7 miles northeast of Freshwater.	6.05	1954-64a 1966-72	3-02-72	9.30	2,510
		KLAMATH RIVER BASIN					
11522300	South Fork Salmon River near Forks of Salmon	Lat 41°13'20", long 123°15'00", in SE¼ sec.30, T.39 N., R.12 W., Siskiyou County, on left bank 100 ft downstream from Methodist Creek, and 4.5 miles southeast of town of Forks of Salmon.	252	1958-66a 1967-72	3-02-72	13.84	13,100
11528400	Hayfork Creek near Hayfork	Lat 40°31'10", long 123°05'05", in SW¼ sec.23, T.31 N., R.11 W., Trinity County, 5.8 miles southwest of Hayfork.	86.7	1956-66a 1967-72	3-03-72	10.06	3,170
		SMITH RIVER BASIN					
11532000	South Fork Smith River near Crescent City	Lat 41°47'30", long 124°01'30", in SE¼ sec.11, T.16 N., R.1 E., Del Norte County, 9.5 miles east of Crescent City.	291	1911-13a 1954-61a 1962-72	3-02-72	34.32	89,200

1. Also a low-flow partial-record station.
a. Operated as a continuous-record gaging station.
b. Peak discharge did not reach base of gage.

Discharge measurements made at miscellaneous sites

Stream	Tributary to	Location	Drainage area (sq mi)	Measured previously (water year)	Measurements	
					Date	Discharge (cfs)
		PAJARO RIVER BASIN				
Unnamed (right bank)	Pajaro River	Lat 36°58'41", long 121°28'07", in Llano del Tequisquita Grant, Santa Clara County, 800 ft downstream from effluence of old river channel of Pajaro River, and 4.1 miles east of Carnadero.	--	--	3-14-72	0
Pajaro River	Pacific Ocean	Lat 36°58'13", long 121°30'00", in Llano del Tequisquita Grant, San Benito County, at bridge on Frazier Lake Road, and 2.3 miles east of Carnadero.	--	--	3-14-72	0
Llagas Creek	Pajaro River	Lat 36°58'07", long 121°30'31", in Las Animas Grant, Santa Clara County, 0.3 mile upstream from mouth, and 2.0 miles southeast of Carnadero.	--	--	3-14-72	9.33
Carnadero Creek	Pajaro River	Lat 36°57'36", long 121°32'00", in Las Animas Grant, Santa Clara County, at bridge on State Highway 25, and 1.3 miles southeast of Carnadero.	--	--	3-14-72	.01
Unnamed (right bank)	Carnadero Creek	Lat 36°57'30", long 121°32'59", in Las Animas Grant, Santa Clara County, 100 ft downstream from bridge on U.S. Highway 101, and 1.1 miles southeast of Carnadero.	--	--	3-14-72	0
Tick Creek	Carnadero Creek	Lat 36°56'38", long 121°30'46", in Juristac Grant, Santa Clara County, 100 ft downstream from private road bridge, and 1.1 miles northwest of Corporal.	--	--	3-14-72	0
Tar Creek	Carnadero Creek	Lat 36°55'45", long 121°32'49", in Juristac Grant, Santa Clara County, just upstream from Southern Pacific Railroad bridge at Corporal.	--	--	3-14-72	.18
Carnadero Creek	Pajaro River	Lat 36°55'34", long 121°32'22", in Juristac Grant, Santa Clara County, 75 ft upstream from mouth, and 0.5 mile southeast of Corporal.	--	--	3-14-72	3.88
Unnamed (left bank)	Pajaro River	Lat 36°55'26", long 121°32'16", in Lomerias Muertas Grant, San Benito County, 150 ft upstream from mouth, and 0.7 mile southeast of Corporal.	--	--	3-14-72	.08
Pajaro River	Pacific Ocean	Lat 36°55'23", long 121°32'17", in Lomerias Muertas Grant, San Benito County, 100 ft downstream from left-bank tributary, and 0.7 mile southeast of Corporal.	--	--	3-14-72	13.3
		KLAMATH RIVER BASIN				
Fall Creek	Klamath River	NE¼ sec.36, T.48 N., R.5 W., Siskiyou County, 1,500 ft upstream from mouth, and 0.8 mile south of Fall Creek powerplant and Copco Post Office.	14.6	1928-59a 1964-71	9-01-72	c 37.0

See footnotes at end of table.

Discharge measurements made at miscellaneous sites--Continued

Stream	Tributary to	Location	Drainage area (sq mi)	Measured previously (water year)	Measurements	
					Date	Discharge (cfs)
KLAMATH RIVER BASIN--Continued						
Bogus Creek	Klamath River	NE¼ sec.17, T.47 N., R.3 W., Siskiyou County, 0.5 mile downstream from Iron Gate Dam, and 6.0 miles northeast of Hornbrook.	--	1965-71	7-20-72 9-08-72	c 13.1 c 14.0
Shasta River	Klamath River	NE¼SW¼ sec.33, T.42 N., R.5 W., Siskiyou County, at bridge on U.S. Highway 99, 1.3 miles south of Edgewood, and 2.7 miles northwest of Weed.	34.9	--	8-23-71 9-29-71 12-08-71 1-26-72 3-22-72 5-03-72	c 1.29 c .21 21.6 57.2 179 21.4
Boles Creek	Shasta River	NE¼NW¼ sec.3, T.41 N., R.5 W., Siskiyou County, just downstream from outlet from sewage ponds, 1.4 miles northwest of Weed.	16.8	--	8-25-71	5.14
Beaughan Creek	Shasta River	NE¼SW¼ sec.28, T.42 N., R.5 W., Siskiyou County, at county bridge 0.1 mile south of Edgewood.	14.9	--	8-26-71	c 1.07
Shasta River	Klamath River	SE¼NE¼ sec.20, T.42 N., R.5 W., Siskiyou County, at county bridge 1.1 miles northwest of Edgewood, and 4.2 miles northwest of Weed.	70.3	--	8-26-71 9-27-71 12-08-71 1-24-72 1-26-72 3-03-72 3-22-72 4-06-72 5-03-72 6-15-72 7-12-72 8-11-72 9-05-72	c 7.45 c 15.5 63.6 190 119 676 282 198 38.1 39.8 c 8.91 c 3.66 c 5.81
Shasta River	Klamath River	NE¼SW¼ sec.9, T.42 N., R.5 W., at Milk Ranch road crossing, 1.4 miles upstream from Lake Shastina, and 2.8 miles north of Edgewood.	72.7	--	8-26-71 9-29-71 12-08-71 5-03-72 6-15-72 7-12-72 8-11-72	c 2.10 c 6.64 61.3 4.86 23.8 5.98 1.61
Garrick Creek	Shasta River	NE¼SW¼ sec.22, T.42 N., R.5 W., Siskiyou County, 20 ft downstream from county bridge, 1.2 miles northeast of Weed.	8.18	--	8-26-71 9-29-71 12-08-71 1-26-72 3-22-72 5-03-72 6-15-72 7-12-72 8-11-72	c .08 c 2.61 9.61 10.2 19.7 .87 1.69 .09 .10
Montague Main Canal	Shasta River	NE¼SW¼ sec.25, T.43 N., R.5 W., Siskiyou County, 230 ft downstream from Dwinnell Dam, 6.5 miles northeast of Edgewood, and 7.7 miles east of Gazelle.	--	--	8-25-71 5-03-72	68 74.4
Beaver Creek	Klamath River	NE¼SW¼ sec.30, T.47 N., R.8 W., Siskiyou County, 1.9 miles upstream from mouth, and 14.8 miles northwest of Yreka.	106	1953-58 1959-65a 1967-71	9-07-71 7-06-72 9-06-72	c 47.8 c 90.3 c 30.3
South Fork Scott River	Scott River	SW¼SE¼ sec.20, T.40 N., R.8 W., Siskiyou County, opposite unnamed tributary 1.1 miles southwest of Callahan, and 1.5 miles above East Fork Scott River.	42.5	1958-60a 1964 1966-71	7-19-72 9-07-72	c 21.8 c 7.59

See footnotes at end of table.

Discharge measurements made at miscellaneous sites--Continued

Stream	Tributary to	Location	Drainage area (sq mi)	Measured previously (water year)	Measurements	
					Date	Discharge (cfs)
KLAMATH RIVER BASIN--Continued						
Moffett Creek	Scott River	SE¼NE¼ sec.27, T.44 N., R.8 W., Siskiyou County, 590 ft upstream from Soap Creek, and 5.1 miles east of Fort Jones.	69.8	1958-67a 1968-71	7-07-72 9-07-72	c 1.65 c .77
Elk Creek	Klamath River	NE¼ sec.36, T.16 N., R.7 E., Siskiyou County, 4.0 miles upstream from mouth, and 4.0 miles south of Happy Camp.	90.4	1956-64a 1967-71	7-19-72 9-06-72	c 54.0 c 36.9
Thompson Creek	Klamath River	SE¼ sec.17, T.17 N., R.8 W., Siskiyou County, 50 ft upstream from highway bridge, 0.1 mile upstream from mouth, and 6.0 miles northeast of Happy Camp.	--	1968-71	7-06-72 9-06-72	c 33.3 c 15.1
Coffee Creek	Trinity River	NW¼SW¼ sec.2, T.37 N., R.8 W., Trinity County, 0.8 mile upstream from Little Boulder Creek, 3.2 miles upstream from mouth, and 8 miles northwest of new location of Trinity Center.	--	1957-66a 1968-71	7-17-72 9-11-72	c 92.8 c 41.0
Deadwood Creek	Trinity River	SW¼NW¼ sec.17, T.33 N., R.8 W., Trinity County, 300 ft upstream from mouth, and 0.7 mile northeast of Lewiston.	--	1965-71	7-14-72 9-11-72	c .56 c .33

a. Operated as a continuous-record gaging station.
c. Base flow.

INDEX

Page

Accuracy of data..... 9
Acre-foot, definition of..... 3
Agua Caliente Creek near Warner Springs..... 118
Alameda Creek, at Union City..... 402
near Niles..... 399
Alamitos Creek near New Almaden..... 384
Alamo Creek near Nipomo..... 295
Alamo Pintado Creek near Solvang..... 277
Alamo River near Niland..... 47
Albion basin, crest-stage partial-record stations in..... 505
Alisal Creek, near Salinas..... 342
near Solvang..... 279
Alisal Reservoir near Solvang..... 278
Aliso Canyon Creek near New Cuyama..... 293
Aliso Creek at El Toro..... 136
All-American Canal, below Pilot Knob wasteway... 31
near Imperial Dam, Ariz.-Calif..... 29
Almaden Reservoir, contents of..... 383
Amargosa River at Tecopa..... 42
Anderson Lake, contents of..... 388
Andreas Creek near Palm Springs..... 60
Antelope Creek near Tennant..... 474
Aptos Creek, at Aptos..... 363
near Aptos..... 362
Arroyo Burro Creek at Santa Barbara..... 259
Arroyo Corte Madera del Presidio at Mill Valley. 425
Arroyo de la Cruz near San Simeon..... 314
Arroyo de la Laguna near Pleasanton..... 398
Arroyo del Hambre at Martinez..... 409
Arroyo del Rey at Del Rey Oaks..... 318
Arroyo Grande, above Phoenix Creek, near Arroyo Grande..... 305
at Arroyo Grande..... 309
Arroyo Hondo near San Jose..... 391
Arroyo Las Positas above Livermore..... 393
Arroyo Mocho, near Livermore..... 392
near Pleasanton..... 394
Arroyo Seco (Los Angeles River basin) near Pasadena..... 214
Arroyo Seco (Salinas River basin), near Greenfield..... 338
near Soledad..... 339
Arroyo Simi near Simi..... 225
Arroyo Trabuco near San Juan Capistrano..... 134
Arroyo Valle, above Lang Canyon, near Livermore. 395
at Pleasanton..... 397
near Livermore..... 396
Atascadero Creek, at Puente Road, near Goleta... 260
near Goleta..... 262

Ballona Creek near Culver City..... 222
Bautista Creek near Valle Vista..... 172
Big Bear Lake near Big Bear Lake..... 139
Big Pine Creek near Big Pine..... 87
Big Rock Creek near Valyermo..... 73
Big Sulphur Creek near Cloverdale..... 434
Big Sur River near Big Sur..... 315
Bishop Creek below powerplant No. 6, near Bishop 86
Black Butte River near Covelo..... 452
Blue Creek near Klamath..... 499
Bodfish Creek near Gilroy..... 351
Boom Creek near Barstow..... 71
Bouquet Creek near Saugus..... 228
Borrego Palm Creek near Borrego Springs..... 51
Bradley ditch near Donovan Road, at Santa Maria. 303
Brea Creek below Brea Dam, near Fullerton..... 203
Bull Creek near Weott..... 462
Butano Creek near Pescadero..... 375

Cache Creek near Mojave..... 79
Cachuma, Lake, near Big Bear Lake..... 275
Cajon Creek below Lone Pine Creek, near Keenbrook..... 160
Calero Reservoir, contents of..... 383
Calleguas Creek at Camarillo State Hospital..... 226
Campo Creek near Campo..... 103
Carbon Creek below Carbon Canyon Dam..... 189
Carmel River, at Robles del Rio..... 316
near Carmel..... 317
Carpinteria Creek near Carpinteria..... 254

Page

Caruthers Creek near Ivanpah..... 44
Castaic Creek near Saugus..... 229
Castro Valley Creek at Hayward..... 404
Cedar Creek near Bell Station..... 345
Cedar Gulch near Callahan..... 483
Cfs-day, definition of..... 3
Chesbro Reservoir, contents of..... 348
China Spring Creek near Mountain Pass..... 43
Chino Creek at Schaeffer Avenue, near Chino..... 185
Cholame Creek near Shandon..... 329
City Creek near Highland..... 147
Clair Engle Lake near Lewiston..... 490
Collection and computation of data..... 5
Colma Creek at South San Francisco..... 378
Colorado River, above Imperial Dam, Ariz.-Calif. 23
at Needles..... 14
at northerly international boundary, above Morelos Dam, near Andrade..... 27
at Palo Verde Dam, Ariz.-Calif..... 22
below Davis Dam, Ariz.-Nev..... 13
below Imperial Dam, Ariz.-Calif..... 24
below Imperial Dam, schematic diagram of..... 38
below Laguna Dam, Ariz.-Calif..... 25
below Parker Dam, Ariz.-Calif..... 20
below Yuma Main Canal wasteway, at Yuma, Ariz. 26
near Topock, Ariz..... 15
Colorado River aqueduct near Parker Dam, Ariz.-Calif..... 17
Conn Creek near Oakville..... 414
Contents, definition of..... 3
Control, definition of..... 3
Convict Creek near Mammoth Lakes..... 82
Cooperation, record of..... 2
Copco Lake near Copco..... 476
Corralitos Creek, at Freedom..... 360
near Corralitos..... 359
Corte Madera Creek at Ross..... 424
Cottonwood Creek (Koehn Lake basin) near Cantil. 81
Cottonwood Creek (Owens Lake basin) near Olancha 94
Cottonwood Creek (Tijuana River basin) above Tecate Creek, near Dulzura..... 102
Cottonwood Creek (tributary to Antelope Valley) near Rosamond..... 76
Cottonwood Wash near Cottonwood Spring..... 64
Coyote Creek (tributary to Salton Sea) near Borrego Springs..... 50
Coyote Creek (tributary to San Francisco Bay), near Gilroy..... 387
near Madrone..... 389
Coyote Creek (tributary to San Gabriel River) at Los Alamitos..... 206
Coyote Creek (tributary to Ventura River), near Oak View..... 249
near Ventura..... 251
Coyote Creek basin, reservoirs in..... 388
Coyote Lake, contents of..... 388
Crest-stage partial-record stations, discharge at..... 503
Cubic foot per second, definition of..... 3
Cucamonga Creek, near Mira Loma..... 187
near Upland..... 186
Cuyama River, below Buckhorn Canyon, near Santa Maria..... 294
below Twitchell Dam..... 297

Dale Lake basin, crest-stage partial-record stations in..... 503
Darwin Creek near Darwin..... 41
Data, accuracy of..... 9
explanation of..... 5
other data available..... 10
Day Creek near Etiwanda..... 167
Deep Creek (Mojave River basin) near Hesperia... 66
Deep Creek (Salton Sea basin) near Palm Desert.. 61
Definition of terms and abbreviations..... 3
Devil Canyon Creek near San Bernardino..... 161
Discharge, definition of..... 4
Downstream order and station numbers..... 4
Drainage area, definition of..... 4
Dry Creek (tributary to Alameda Creek) at Union City..... 400

Page

Dry Creek (tributary to Russian River), near Cloverdale..... 437
near Geyserville..... 438

East Twin Creek near Arrowhead Springs..... 151
Eel River, at Fort Seward..... 456
at Scotia..... 463
at Van Arsdale Dam, near Potter Valley..... 449
below Scott Dam, near Potter Valley..... 447
East Branch, South Fork, near Garberville..... 460
Middle Fork, near Dos Rios..... 454
near Dos Rios..... 450
North Fork, near Mina..... 455
South Fork, at Leggett..... 459
near Miranda..... 461
Eel River basin, crest-stage partial-record stations in..... 505
El Toro Creek near Spreckels..... 341
Elder Creek near Branscomb..... 457
Elk Creek near Hearst..... 453
Emerson Lake basin, crest-stage partial-record stations in..... 503
Estrella River near Estrella..... 330
Explanation of surface-water data..... 5

Fish Creek near Duarte..... 196
Foxen Creek near Sisquoc..... 300
Franklin Creek at Carpinteria..... 255
Fullerton Creek, at Richman Avenue, near Fullerton..... 205
below Fullerton Dam, near Brea..... 204

Gabilan Creek near Salinas..... 343
Gage height, definition of..... 4
Gaging station, definition of..... 4
Garcia River near Point Arena..... 441
Gaviota Creek near Gaviota..... 267
Gibraltar Reservoir, contents of..... 271
Gila Gravity Main Canal at Imperial Dam, Ariz.-Calif..... 28
Goler Gulch near Randsburg..... 78
Guadalupe Reservoir, contents of..... 383
Guadalupe River at San Jose..... 385
Guadalupe River basin, reservoirs in..... 383
Guejito Creek near San Pasqual..... 116

Hayfork Creek near Hyampom..... 495
Hopper Creek near Piru..... 237
Huasna River near Arroyo Grande..... 296
Huerhuero Creek near Creston..... 328
Hydrologic bench-mark station..... 4
Hydrologic conditions..... 10

Independence Creek below Pinyon Creek, near Independence..... 90
Indian Creek near Happy Camp..... 486
Indian Wells Valley, crest-stage partial-record stations in..... 503
International Hydrological Decade (IHD) River Stations..... 4
Introduction..... 1
Inyo Creek near Lone Pine..... 92
Iron Gate Reservoir near Hornbrook..... 476
Irwin Creek at San Rafael..... 423

Jack Creek near Templeton..... 324
Jacoby Creek basin, crest-stage partial-record stations in..... 505
Jalama Creek near Lompoc..... 268
Jameson Lake, contents of..... 269
Jamul Creek near Jamul..... 107
Judge Francis Carr powerplant near French Gulch. 491

Keys Creek tributary at Valley Center..... 123
Klamath River, at Orleans..... 488
below Iron Gate Dam..... 477
below John C. Boyle powerplant, near Keno, Oreg..... 475
near Klamath..... 500
near Seiad Valley..... 485
Klamath River basin, crest-stage partial-record stations in..... 505
discharge measurements at miscellaneous sites in..... 507

La Brea Creek near Sisquoc..... 299
Laguna Creek near Davenport..... 371
Laguna de Santa Rosa near Graton..... 439

Page

Lakes and reservoirs:
Almaden Reservoir..... 383
Anderson Lake..... 388
Big Bear Lake near Big Bear Lake..... 139
Cachuma, Lake, near Santa Ynez..... 275
Calero Reservoir..... 383
Chesbro Reservoir..... 348
Clair Engle Lake near Lewiston..... 490
Copco Lake near Copco..... 476
Coyote Lake..... 388
Elsman, Lake..... 383
Gibraltar Reservoir..... 271
Guadalupe Reservoir..... 383
Havasu, Lake, near Parker Dam, Ariz.-Calif.... 18
Hemet, Lake, near Idyllwild..... 169
Iron Gate Reservoir near Hornbrook..... 476
Jameson Lake..... 269
Lexington Reservoir..... 383
Mendocino Lake near Ukiah..... 430
Mono Lake near Mono Lake..... 96
Nacimiento Reservoir near Bradley..... 332
Pillsbury, Lake, near Potter Valley..... 446
Piru, Lake, near Piru..... 235
Rodriguez Reservoir at Rodriguez Dam, Baja California, Mexico..... 105
Ruth Reservoir near Forest Glen..... 467
San Antonio Reservoir near Bradley..... 332
Santa Margarita Lake near Pozo..... 322
Stevens Creek Reservoir near Monte Vista..... 382
Uvas Reservoir..... 348
Vail Lake..... 127
Las Flores Creek near Oceanside..... 132
Lee Vining Creek near Lee Vining..... 100
Lexington Reservoir, contents of..... 383
Little River near Trinidad..... 471
Little Rock Creek near Little Rock..... 74
Little San Gorgonio Creek near Beaumont..... 149
Little Shasta River near Montague..... 478
Little Tujunga Creek near San Fernando..... 211
Llagas Creek above Chesbro Reservoir, near Morgan Hill..... 347
Lockwood Creek, at Gorge, near Stauffer..... 233
Middle Fork, near Stauffer..... 232
Lone Pine Creek near Keenbrook..... 159
Lopez Creek near Arroyo Grande..... 307
Los Angeles River, at Long Beach..... 221
at Los Angeles..... 213
at Sepulveda Dam..... 207
near Downey..... 215
Los Angeles River basin, schematic diagram of... 193
Los Berros Creek near Nipomo..... 310
Los Penasquitos Creek, below Poway Creek, near Poway..... 112
near Poway..... 113
Low-flow partial-record stations, measurements at..... 502
Lucerne Dry Lake basin, crest-stage partial-record stations in..... 503
Lytle Creek, at Colton..... 162
near Fontana..... 157

Maacama Creek near Kellogg..... 435
Mad River, near Arcata..... 470
near Forest Glen..... 468
near Kneeland..... 469
Mad River basin, discharge measurements at low-flow partial-record stations in..... 502
Majors Creek near Santa Cruz..... 370
Malibu Creek at Crater Camp, near Calabasas..... 224
Maria Ygnacio Creek at University Drive, near Goleta..... 261
Matadero Creek at Palo Alto..... 381
Matilija Creek, at Matilija Hot Springs..... 245
North Fork, at Matilija Hot Springs..... 246
Matilija Reservoir at Matilija Hot Springs..... 244
Mattole River near Petrolia..... 445
Mazourka Creek near Independence..... 91
Meeks and Daley Canal near Colton..... 156
Mendocino Lake near Ukiah..... 430
Miguelito Creek at Lompoc..... 288
Mill Creek (Mono Lake) below Lundy Lake, near Mono Lake..... 97
Mill Creek (Santa Ana River basin) near Yucaipa. 143
Mill Creek, North Fork, near La Canada..... 209
Milliken Creek near Napa..... 416
Miscellaneous sites, measurements at..... 506
Mission Creek (Los Angeles River basin) near Montebello..... 218

Page

Mission Creek (Mission Creek basin) near Mission Street, at Santa Barbara..... 257
Mission Creek (Salton Sea basin) near Desert Hot Springs..... 57
Mojave River, at Afton..... 72
at Barstow..... 70
at lower narrows, near Victorville..... 68
below Forks Reservoir, near Hesperia..... 67
near Hodge..... 69
Mono Lake near Mono Lake..... 96
Morro Creek at Morro Bay..... 311
Murrieta Creek at Temecula..... 128

Nacimiento Reservoir near Bradley..... 332
Nacimiento River, below Nacimiento Dam, near Bradley..... 333
below Sapaque Creek, near Bryson..... 331
Napa Creek at Napa..... 418
Napa River, near Napa..... 415
near St. Helena..... 413
Napa River basin, crest-stage partial-record stations in..... 504
discharge measurements at low-flow partial-record stations in..... 502
Navarro River near Navarro..... 442
New River near Westmorland..... 48
Novato Creek at Novato..... 421
Noyo River near Fort Bragg..... 443

Oak Creek near Mojave..... 77
Oso Creek at Crown Valley Parkway, near Mission Viejo..... 135
Other data available..... 10
Outlet Creek near Longvale..... 451
Owens River, at Keeler Bridge, near Lone Pine... 93
near Big Pine..... 89

Pacheco Creek near Dunneville..... 346
Pacoima Creek near San Fernando..... 208
Pajaro River, at Chittenden..... 358
at Watsonville..... 361
near Gilroy..... 349
Pajaro River basin, reservoirs in..... 348
Palm Canyon Creek, near Palm Springs..... 59
tributary near Anza..... 59
Palo Verde Canal near Blythe..... 21
Partial-record stations, definition of..... 4
discharge at..... 502
Patterson Creek at Union City..... 401
Pauma Creek near Pauma Valley..... 120
Perris Valley Storm Drain at Nuevo Road, near Perris..... 173
Pescadero Creek (tributary to Pacific Ocean) near Pescadero..... 374
Pescadero Creek (tributary to San Benito River) near Chittenden..... 357
Pilarcitos Creek at Half Moon Bay..... 377
Pilot Knob powerplant and wasteway near Pilot Knob..... 30
Pine Creek at division box, near Bishop..... 84
Pine Tree Creek near Mojave..... 80
Pinole Creek at Pinole..... 408
Piru Creek, above Lake Piru..... 234
below Thorn Meadows, near Stauffer..... 231
near Piru..... 236
Plunge Creek near East Highlands..... 145
Pomerado Creek at Poway Road, near Poway..... 111
Potter Valley powerhouse tailrace near Potter Valley..... 448
Precipitation:
Aliso Canyon Creek near New Cuyama..... 293
Boom Creek near Barstow..... 71
Cache Creek near Mojave..... 79
Cedar Gulch near Callahan..... 483
China Spring Creek near Mountain Pass..... 43
Colma Creek at South San Francisco..... 378
Cottonwood Wash near Cottonwood Spring..... 64
Darwin Creek near Darwin..... 41
Elder Creek near Branscomb..... 457
Inyo Creek near Lone Pine..... 92
Los Penasquitos Creek below Poway Creek, near Poway..... 112
Mill Creek, North Fork, near La Canada..... 209
Mission Creek near Desert Hot Springs..... 57
Palm Canyon Creek tributary near Anza..... 59
Perris Valley Storm Drain at Nuevo Road, near Perris..... 173
Pescadero Creek near Chittenden..... 357

Page

Precipitation--Continued
San Luis Rey River tributary near Pala..... 122
Santa Rita Creek near Templeton..... 326
Tar Spring Creek near Arroyo Grande..... 308
Temecula Creek at Vail Dam..... 127
Wildrose Creek near Wildrose Station..... 39
Wilson Creek tributary near Dulzura..... 101
Publications..... 9
Purisima Creek near Lompoc..... 286

Reclamation ditch near Salinas..... 344
Redwood Creek (tributary to Napa Creek) near Napa..... 417
Redwood Creek (tributary to Pacific Ocean) at Orick..... 473
at South Park boundary, near Orick..... 472
Redwood Creek (tributary to San Francisco Bay) at Redwood City..... 379
Return surface flows below Imperial Dam, Ariz.-Calif..... 32
Rheem Creek at San Pablo..... 407
Rio Hondo, above Whittier Narrows Dam..... 216
below Whittier Narrows Dam..... 219
near Downey..... 220
near Montebello..... 217
Riverside Narrows Water Quality Control Plant at Riverside Narrows, near Arlington..... 165
Rock Creek at Little Round Valley, near Bishop..... 83
Rodeo-San Pasqual Creek near Lompoc..... 290
Rodriguez Reservoir at Rodriguez Dam, Baja California, Mexico..... 105
Rush Creek, above Grant Lake, near June Lake.... 99
below Agnew Lake, near June Lake..... 98
Russian River, East Fork, near Calpella..... 429
East Fork, near Ukiah..... 431
near Cloverdale..... 433
near Guerneville..... 440
near Healdsburg..... 436
near Hopland..... 432
near Ukiah..... 428
Russian River basin, crest-stage partial-record stations in..... 504
Ruth Reservoir near Forest Glen..... 467

Salinas River, above Pilitas Creek, near Santa Margarita..... 323
at Paso Robles..... 327
at Soledad..... 337
near Bradley..... 335
near Pozo..... 319
near Spreckels..... 340
Salinas River basin, crest-stage partial-record stations in..... 504
discharge measurements at low-flow partial-record stations in..... 502
Salmon Creek at Bodega..... 427
Salmon River at Somes Bar..... 487
Salsipuedes Creek, near Lompoc..... 284
near Pozo..... 321
Salt Creek (Salton Sea basin) near Mecca..... 46
Salt Creek (Santa Ana River basin) at Railroad Canyon Reservoir, near Elsinore..... 176
Salton Sea, inflow to..... 45
near Westmorland..... 45
Salton Sea basin, crest-stage partial-record stations in..... 503
San Antonio Creek (Santa Ana River basin), below San Antonio Dam..... 184
near Claremont..... 182
San Antonio Creek (tributary to Pacific Ocean), at Los Alamos..... 291
near Casmalia..... 292
San Antonio Creek (Ventura River basin) at Casitas Springs..... 248
San Antonio Reservoir near Bradley..... 332
San Antonio River near Lockwood..... 334
San Benito River, at State Highway 156, near Hollister..... 356
near Hollister..... 355
near Willow Creek School..... 353
San Diego Creek near Irvine..... 137
San Diego River near Santee..... 110
San Dimas Creek below San Dimas Dam..... 198
San Felipe Creek, near Julian..... 49
near Westmorland..... 53
San Francisquito Creek at Stanford University... 380
San Gabriel River, above Whittier Narrows Dam... 200

Page
San Gabriel River, at Pico..... 201
at Spring Street, near Los Alamitos..... 202
below Santa Fe Dam, near Baldwin Park..... 197
East Fork, near Camp Bonita..... 194
West Fork, at Camp Rincon..... 195
San Gabriel River basin, schematic diagram of... 193
San Gorgonio River near White Water..... 55
San Gregorio Creek at San Gregorio..... 376
San Jacinto River, at Railroad Canyon weir, near Elsinore..... 174
near Elsinore..... 179
near San Jacinto..... 170
San Jose Creek (tributary to Pacific Ocean), at Goleta..... 264
near Goleta..... 263
San Jose Creek (tributary to San Gabriel River) near El Monte..... 199
San Juan Creek at San Juan Capistrano..... 133
San Lorenzo Creek (Salinas River basin) below Bitterwater Creek, near King City..... 336
San Lorenzo Creek (tributary to San Francisco Bay), at Hayward..... 403
at San Lorenzo..... 405
San Lorenzo River, at Big Trees..... 369
near Boulder Creek..... 367
San Luis Rey River, at Monserate Narrows, near Pala..... 122
at Oceanside..... 125
near Bonsall..... 124
tributary near Pala..... 122
West Fork, near Warner Springs..... 119
San Pedro Creek at Goleta..... 265
San Rafael Creek at San Rafael..... 422
San Rafael Creek basin, crest-stage partial-record stations in..... 504
San Ramon Creek, at San Ramon..... 410
at Walnut Creek..... 411
San Timoteo Creek near Loma Linda..... 150
Santa Ana Creek near Oak View..... 250
Santa Ana River, at E Street, near San Bernardino..... 154
at Mission Boulevard, at Riverside..... 163
at MWD Crossing, near Arlington..... 164
at Prado Park, near Corona..... 168
at Riverside Narrows, near Arlington..... 166
at Santa Ana..... 192
below Prado Dam..... 188
near Mentone..... 140
Santa Ana River basin, schematic diagram of..... 138
Santa Ana River spreading diversion near Mentone..... 142
Santa Clara River, above Railroad Station, near Lang..... 227
at Los Angeles-Ventura County line..... 230
at Montalvo..... 243
Santa Cruz Creek near Santa Ynez..... 274
Santa Margarita Lake near Pozo..... 322
Santa Margarita River, at Ysidora..... 131
near Fallbrook..... 130
near Temecula..... 129
Santa Maria Creek near Ramona..... 117
Santa Maria River at Guadalupe..... 304
Santa Paula Creek near Santa Paula..... 241
Santa Rita Creek, near Templeton..... 326
tributary near Templeton..... 325
Santa Rosa Creek near Cambria..... 313
Santa Ynez River, above Gibraltar Dam, near Santa Barbara..... 271
at Cooper's Reef, near Lompoc..... 283
at Jameson Lake, near Montecito..... 269
at narrows, near Lompoc..... 285
at Pine Canyon, near Lompoc..... 289
at Solvang..... 280
at 13th Street, near Lompoc..... 287
below Gibraltar Dam, near Santa Barbara..... 272
below Los Laureles Canyon, near Santa Ynez.... 273
near Buellton..... 282
near Santa Ynez..... 276
Santa Ysabel Creek, near Ramona..... 114
near San Pasqual..... 115
Santiago Creek, at Modjeska..... 190
at Santa Ana..... 191
San Vincente Creek near Davenport..... 372
Saratoga Creek at Saratoga..... 386
Saticoy diversion near Saticoy..... 242
Scott Creek above Little Creek, near Davenport..... 373
Scott River, East Fork, above Kangaroo Creek, near Callahan..... 481
Scott River, East Fork, at Callahan..... 482
East Fork, below Houston Creek, near Callahan. 480
near Fort Jones..... 484
Selected references..... 11
Sespe Creek, near Fillmore..... 239
near Wheeler Springs..... 238
Shasta River near Yreka..... 479
Silver Canyon Creek near Laws..... 85
Sisquoc River, near Garey..... 302
near Sisquoc..... 298
Smith River basin, crest-stage partial-record stations in..... 505
Smith River near Crescent City..... 501
Snow Creek near White Water..... 56
Sonoma Creek at Agua Caliente..... 420
Soquel Creek, at Soquel..... 366
near Soquel..... 365
West Branch, near Soquel..... 364
Special networks and programs..... 4
Spencer Canyon Creek near Fairmont..... 75
Stage-discharge relation, definition of..... 4
Stevens Creek Reservoir near Monte Vista..... 382
Sweetwater River near Descanso..... 108
Sycamore Creek at Santa Barbara..... 256

Tahquitz Creek near Palm Springs..... 58
Tar Spring Creek near Arroyo Grande..... 308
Tecolotito Creek near Goleta..... 266
Temecula Creek, at Vail Dam..... 127
near Aguanga..... 126
Temescal Creek, at Corona..... 181
near Corona..... 180
Tenmile Creek near Laytonville..... 458
Tenmile River, Middle Fork, near Fort Bragg..... 444
Tepusquet Creek near Sisquoc..... 301
Terms and abbreviations, definition of..... 3
Tijuana River, near Dulzura..... 104
near Nestor..... 106
Topanga Creek near Topanga Beach..... 223
Toro Creek, near Morro Bay..... 312
near Pozo..... 320
Tres Pinos Creek near Tres Pinos..... 354
Trinity River, above Coffee Creek, near Trinity Center..... 489
at Hoopa..... 498
at Lewiston..... 492
near Burnt Ranch..... 494
North Fork, at Helena..... 493
South Fork, below Hyampom..... 496
Tujunga Creek, below Hansen Dam..... 212
near Sunland..... 210
Tulucay Creek at Napa..... 419

Upper Penitencia Creek at San Jose..... 390
Uvas Creek, above Uvas Reservoir, near Morgan Hill..... 350
near Gilroy..... 352
Uvas Reservoir, contents of..... 348

Vail Lake, contents of..... 127
Vallecito Creek near Julian..... 52
Van Duzen River, near Bridgeville..... 465
near Dinsmores..... 464
Ventura River, near Meiners Oaks..... 247
near Ventura..... 252
Victoria Street drain at outlet, near Santa Barbara..... 258

Walker Creek near Tomales..... 426
Walnut Creek at Concord..... 412
Warm Creek, floodway at San Bernardino..... 153
near San Bernardino..... 155
Wasteway No. 1 near Mecca..... 65
Waterman Canyon Creek near Arrowhead Springs.... 152
Whitewater River, at Indio..... 62
at White Water..... 54
near Mecca..... 63
Wildcat Creek at Richmond..... 406
Wildrose Creek near Wildrose Station..... 39
Willow Creek near Willow Creek..... 497
Wilson Creek tributary near Dulzura..... 101
Wittenberg Creek near Arroyo Grande..... 306
WRD, definition of..... 4
WSP, definition of..... 4

Yager Creek near Carlotta..... 466

Zaca Creek near Buellton..... 281
Zayante Creek at Zayante..... 368

GPO 983-955

U. S. DEPARTMENT OF THE INTERIOR
Geological Survey
855 Oak Grove Avenue
Menlo Park, California 94025

POSTAGE AND FEES PAID
U.S. DEPARTMENT OF THE INTERIOR
INT 413

U.S.MAIL