1973

Water Resources Data for California

Part 1. Surface Water Records

Volume 1: Colorado River Basin, Southern Great Basin, and Pacific Slope Basins excluding Central Valley

UNITED STATES
DEPARTMENT OF THE INTERIOR
GEOLOGICAL SURVEY

Prepared in cooperation with the California Department of Water Resources and with other agencies

CALENDAR FOR WATER YEAR 1973

1972

OCTOBER

S	M	T	W	T	F	S
1	2	3	4	5	6	7
8	9	10	11	12	13	14
15	16	17	18	19	20	21
22	23	24	25	26	27	28
29	30	31				

NOVEMBER

S	M	T	W	T	F	S
			1	2	3	4
5	6	7	8	9	10	11
12	13	14	15	16	17	18
19	20	21	22	23	24	25
26	27	28	29	30		

DECEMBER

S	M	T	W	T	F	S
					1	2
3	4	5	6	7	8	9
10	11	12	13	14	15	16
17	18	19	20	21	22	23
24	25	26	27	28	29	30
31						

1973

JANUARY

S	M	T	W	T	F	S
	1	2	3	4	5	6
7	8	9	10	11	12	13
14	15	16	17	18	19	20
21	22	23	24	25	26	27
28	29	30	31			

FEBRUARY

S	M	T	W	T	F	S
				1	2	3
4	5	6	7	8	9	10
11	12	13	14	15	16	17
18	19	20	21	22	23	24
25	26	27	28			

MARCH

S	M	T	W	T	F	S
				1	2	3
4	5	6	7	8	9	10
11	12	13	14	15	16	17
18	19	20	21	22	23	24
25	26	27	28	29	30	31

APRIL

S	M	T	W	T	F	S
1	2	3	4	5	6	7
8	9	10	11	12	13	14
15	16	17	18	19	20	21
22	23	24	25	26	27	28
29	30					

MAY

S	M	T	W	T	F	S
		1	2	3	4	5
6	7	8	9	10	11	12
13	14	15	16	17	18	19
20	21	22	23	24	25	26
27	28	29	30	31		

JUNE

S	M	T	W	T	F	S
					1	2
3	4	5	6	7	8	9
10	11	12	13	14	15	16
17	18	19	20	21	22	23
24	25	26	27	28	29	30

JULY

S	M	T	W	T	F	S
1	2	3	4	5	6	7
8	9	10	11	12	13	14
15	16	17	18	19	20	21
22	23	24	25	26	27	28
29	30	31				

AUGUST

S	M	T	W	T	F	S
			1	2	3	4
5	6	7	8	9	10	11
12	13	14	15	16	17	18
19	20	21	22	23	24	25
26	27	28	29	30	31	

SEPTEMBER

S	M	T	W	T	F	S
						1
2	3	4	5	6	7	8
9	10	11	12	13	14	15
16	17	18	19	20	21	22
23	24	25	26	27	28	29
30						

1973

Water Resources Data for California

Part 1. Surface Water Records

Volume 1: Colorado River Basin, Southern Great Basin, and Pacific Slope Basins excluding Central Valley

UNITED STATES
DEPARTMENT OF THE INTERIOR
GEOLOGICAL SURVEY

Prepared in cooperation with the California Department of Water Resources and with other agencies

Water-resources records, 1973, for California are in the following reports of the U.S. Geological Survey:

1. Water Resources Data for California
   Part 1: Surface Water Records
   Volume 1: Colorado River Basin, Southern Great Basin, and Pacific Slope Basins excluding Central Valley

2. Water Resources Data for California
   Part 1: Surface Water Records
   Volume 2: Northern Great Basin and Central Valley

3. Water Resources Data for California
   Part 2: Water Quality Records

Copies of these reports may be obtained from District Chief,
Water Resources Division
U.S. Geological Survey
855 Oak Grove Avenue
Menlo Park, California 94025

Prepared in cooperation with

California Department of Water Resources
California Department of Transportation
Alameda County Flood Control and Water Conservation District
Alameda County Water District
Berrenda Mesa Water District
Casitas Municipal Water District
Coachella Valley County Water District
Contra Costa County Flood Control and Water Conservation District
Desert Water Agency
East Bay Municipal Utility District
Georgetown Divide Public Utility District
Imperial Irrigation District
Kern County Water Agency
Lake County Flood and Water Conservation District
Los Angeles County Flood Control District
Los Angeles Department of Water and Power
Madera Irrigation District
Merced Irrigation District
Modoc County Department of Public Works
Montecito County Water District
Monterey County Flood Control and Water Conservation District
Napa County Flood Control and Water Conservation District
Orange County Flood Control District
Oroville-Wyandotte Irrigation District
Paradise Irrigation District
Rio San Diego Municipal Water District
Riverside County Flood Control and Water Conservation District
Sacramento County Department of Public Works, Water Resources Division
San Benito County Water Conservation and Flood Control District
San Bernardino Valley Municipal Water District
San Diego (city) Water Utilities
San Diego (county) Department of Sanitation and Flood Control
San Francisco, City and County, Hetch-Hetchy Water and Power
San Francisco, City and County Water Department
San Luis Obispo County Flood Control and Water Conservation District
San Mateo County
San Rafael, City of, Department of Public Works
Santa Barbara City Water Department
Santa Barbara County Flood Control and Water Conservation District
Santa Barbara County Water Agency
Santa Clara County Flood Control and Water District
Santa Cruz County Flood Control and Water Conservation District
Santa Maria Valley Water Conservation District
Santa Ynez River Water Conservation District
Siskiyou County Flood Control and Water Conservation District
Tehachapi-Cummings County Water District
Terra Bella Irrigation District
Tulare County Flood Control District
Turlock Irrigation District
United Water Conservation District
University of California (Berkeley)
University of California (Davis), Division of Environmental Studies
Ventura County Department of Public Works
Western Municipal Water District
Woodbridge Irrigation District
Yolo County Flood Control and Water Conservation District
Corps of Engineers, U.S. Army
Bureau of Reclamation, U.S. Department of the Interior
National Park Service, U.S. Department of the Interior
Forest Service, U.S. Department of Agriculture
Soil Conservation Service, U.S. Department of Agriculture
U.S. Atomic Energy Commission

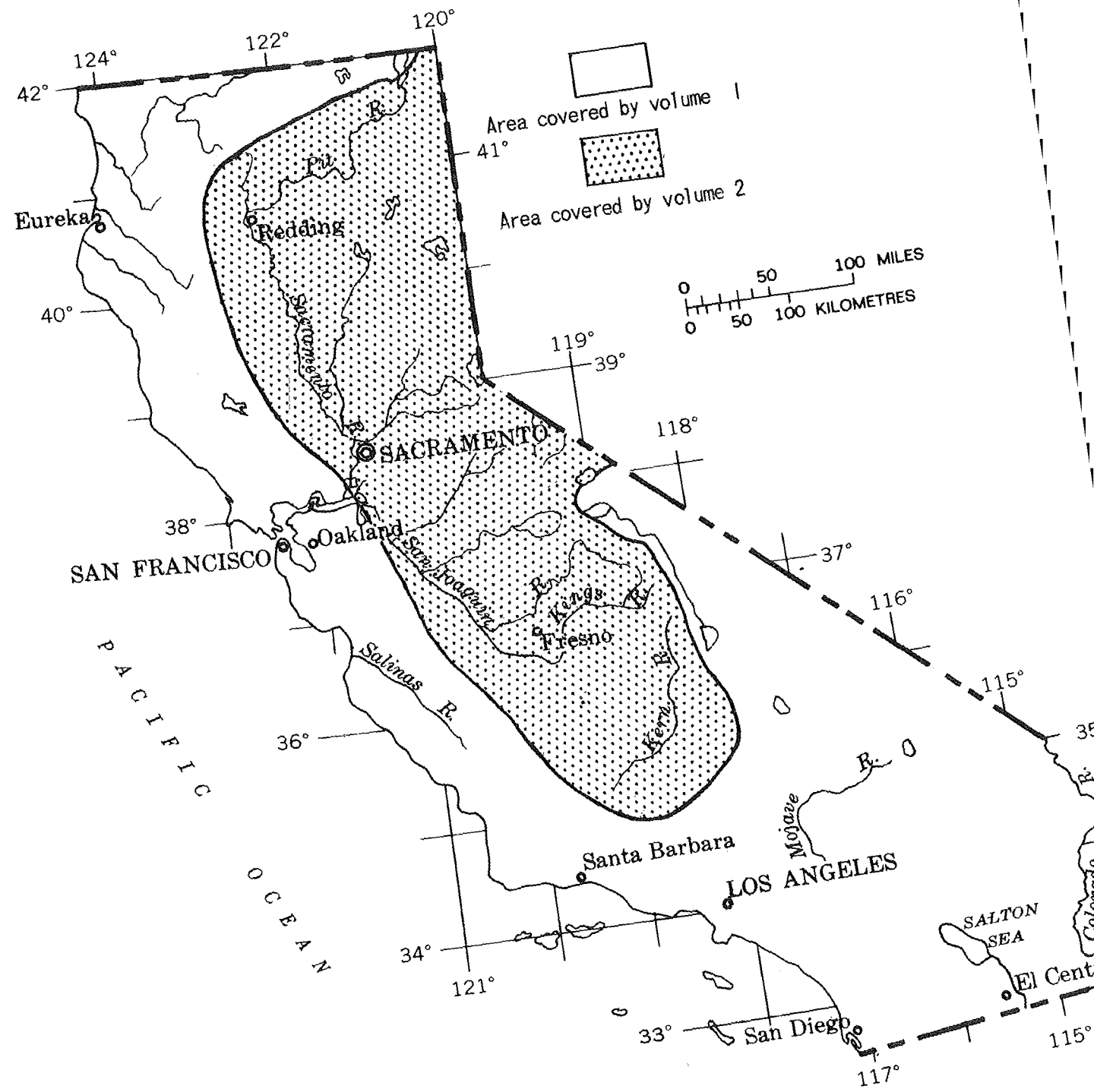
Area covered by volume 1
Area covered by volume 2
0 50 100 MILES
0 50 100 KILOMETRES
Eureka
Redding
Pit R.
Sacramento R.
SACRAMENTO
Oakland
SAN FRANCISCO
San Joaquin R.
Kings R.
Fresno
Kern R.
Salinas R.
Mojave R.
Santa Barbara
LOS ANGELES
SALTON SEA
El Cent
San Diego
PACIFIC OCEAN
124°
122°
120°
42°
41°
40°
39°
38°
37°
36°
34°
33°
119°
118°
116°
115°
121°
117°

CONTENTS

	Page
List of gaging stations, in downstream order, for which records are published	VI
Introduction	1
Cooperation	2
Definition of terms	3
Special networks and programs	4
Downstream order and station numbers	5
Explanation of surface-water data	5
Collection and computation of data	5
Accuracy of data	9
Publications	9
Other data available	10
Records of discharge collected by agencies other than the Geological Survey	10
Hydrologic conditions	10
Selected references	12
Gaging-station records	15
Discharge at partial-record stations and miscellaneous sites	500
Crest-stage partial-record stations	500
Discharge measurements at miscellaneous sites	504
Index	507

ILLUSTRATIONS

		Page
Figure 1.	Map showing runoff for the current water year	13
2.	Schematic diagram showing gaging stations on streams, diversions, and return flows between Imperial Dam and the southerly international boundary	40
3-4.	Schematic diagrams showing diversions and storage in:	
	3. Santa Ana River basin	144
	4. San Gabriel and Los Angeles river basins	193

TABLES

Table 1.	Factors for converting English units to International System (SI) units	14

Page

COLORADO RIVER BASIN
COLORADO RIVER:
Colorado River below Davis Dam, Ariz.-Nev..... 15
Colorado River at Needles..... 16
Colorado River near Topock, Ariz..... 17
LAKE HAVASU:
DIVERSION FROM LAKE HAVASU
Colorado River aqueduct near Parker Dam, Ariz.-Calif..... 19
Lake Havasu near Parker Dam, Ariz.-Calif..... 20
Colorado River below Parker Dam, Ariz.-Calif..... 22
TRIBUTARIES AND DIVERSIONS BETWEEN PARKER DAM AND PALO VERDE DAM
Palo Verde Canal near Blythe..... 23
Colorado River at Palo Verde Dam, Ariz.-Calif..... 24
Colorado River above Imperial Dam, Ariz.-Calif..... 25
Colorado River below Imperial Dam, Ariz.-Calif..... 26
Colorado River below Laguna Dam, Ariz.-Calif..... 27
Colorado River below Yuma Main Canal wasteway, at Yuma, Ariz..... 28
Colorado River at northerly international boundary, above Morelos Dam, near Andrade..... 29
DIVERSIONS AND RETURN FLOWS AT AND BELOW IMPERIAL DAM
Gila Gravity Main Canal at Imperial Dam, Ariz.-Calif..... 30
All-American Canal near Imperial Dam, Ariz.-Calif..... 31
Pilot Knob powerplant and wasteway near Pilot Knob..... 32
All-American Canal below Pilot Knob wasteway..... 33
Return surface flows below Imperial Dam, Ariz.-Calif..... 34
THE GREAT BASIN
PANAMINT VALLEY
Wildrose Creek near Wildrose Station..... 41
Darwin Creek near Darwin..... 43
DEATH VALLEY
Amargosa River at Tecopa..... 44
IVANPAH VALLEY
China Spring Creek near Mountain Pass..... 45
BRISTOL LAKE BASIN
Caruthers Creek near Ivanpah..... 46
SALTON SEA BASIN
Salton Sea near Westmorland..... 47
Inflow to Salton Sea..... 47
Salt Creek near Mecca..... 48
Alamo River near Niland..... 49
New River near Westmorland..... 50
San Felipe Creek near Julian..... 51
Coyote Creek near Borrego Springs..... 52
Borrego Palm Creek near Borrego Springs..... 53
Carrizo Creek:
Vallecito Creek near Julian..... 54
San Felipe Creek near Westmorland..... 55
Whitewater River at White Water..... 56
San Gorgonio River near White Water..... 57
Snow Creek near White Water..... 58
Mission Creek near Desert Hot Springs..... 59
Morongo Wash:
Tahquitz Creek near Palm Springs..... 60
Palm Canyon Creek:
Palm Canyon Creek tributary near Anza..... 61
Palm Canyon Creek near Palm Springs..... 62
Andreas Creek near Palm Springs..... 63
Deep Creek near Palm Desert..... 64
Whitewater River at Indio..... 65
Whitewater River near Mecca..... 66
Box Canyon Wash:
Cottonwood Wash near Cottonwood Spring..... 67
Wasteway No. 1 near Mecca..... 68
MOJAVE RIVER BASIN
Deep Creek (head of Mojave River) near Hesperia..... 69

Page

THE GREAT BASIN--Continued
MOJAVE RIVER BASIN--Continued
Mojave River below Forks Reservoir, near Hesperia..... 70
Mojave River at lower narrows, near Victorville..... 71
Mojave River near Hodge..... 72
Mojave River at Barstow..... 73
Boom Creek near Barstow..... 74
Mojave River at Afton..... 75
ANTELOPE VALLEY
Big Rock Creek near Valyermo..... 76
Little Rock Creek near Little Rock..... 77
Spencer Canyon Creek near Fairmont..... 78
Oak Creek near Mojave..... 79
KOEHN LAKE BASIN
Pine Tree Creek near Mojave..... 80
OWENS LAKE BASIN
Owens River:
Convict Creek near Mammoth Lakes..... 81
Rock Creek at Little Round Valley, near Bishop..... 82
Pine Creek at division box, near Bishop..... 83
Silver Canyon Creek near Laws..... 84
Bishop Creek below powerplant No. 6, near Bishop..... 85
Big Pine Creek near Big Pine..... 86
Owens River near Big Pine..... 88
Independence Creek below Pinyon Creek, near Independence..... 89
Lone Pine Creek:
Inyo Creek near Lone Pine..... 90
Owens River at Keeler Bridge, near Lone Pine..... 91
Cottonwood Creek near Olancha..... 92
MONO LAKE BASIN
Mono Lake near Mono Lake..... 95
Mill Creek below Lundy Lake, near Mono Lake..... 96
Rush Creek below Agnew Lake, near June Lake..... 97
Rush Creek above Grant Lake, near June Lake..... 98
Lee Vining Creek near Lee Vining..... 99
PACIFIC SLOPE BASINS IN CALIFORNIA
TIJUANA RIVER BASIN
Cottonwood Creek (head of Tijuana River):
Wilson Creek:
Wilson Creek tributary near Dulzura..... 100
Cottonwood Creek above Tecate Creek, near Dulzura..... 101
Tecate Creek:
Campo Creek near Campo..... 102
Tijuana River near Dulzura..... 103
Rodriguez Reservoir at Rodriguez Dam, Baja California, Mex..... 104
Tijuana River near Nestor..... 105
OTAY RIVER BASIN
Jamul Creek (head of Otay River) near Jamul..... 106
Lower Otay Reservoir near Chula Vista..... 107
SWEETWATER RIVER BASIN
Sweetwater River near Descanso..... 108
Sweetwater Reservoir near National City..... 110
SAN DIEGO RIVER BASIN
El Capitan Reservoir near Lakeside..... 111
San Vicente Reservoir near Lakeside..... 112
San Diego River near Santee..... 113
LOS PENASQUITOS CREEK BASIN
Poway Creek (head of Los Penasquitos Creek):
Pomerado Creek at Poway Road, near Poway..... 114
Los Penasquitos Creek below Poway Creek, near Poway..... 115
Los Penasquitos Creek near Poway..... 116
SAN DIEGUITO RIVER BASIN
Santa Ysabel Creek (head of San Dieguito River) near Ramona..... 117
Santa Ysabel Creek near San Pasqual..... 118
Guejito Creek near San Pasqual..... 119

Page

PACIFIC SLOPE BASINS IN CALIFORNIA--Continued
SAN DIEGUITO RIVER BASIN--Continued
Santa Ysabel Creek--Continued
Santa Maria Creek near Ramona..... 120
Lake Hodges near Escondido..... 121
ESCONDIDO CREEK BASIN
Lake Wohlford near Escondido..... 122
SAN LUIS REY RIVER BASIN
San Luis Rey River:
Agua Caliente Creek near Warner Springs..... 123
West Fork San Luis Rey River near Warner Springs..... 124
Pauma Creek near Pauma Valley..... 125
San Luis Rey River tributary near Pala..... 127
San Luis Rey River at Monserate Narrows, near Pala..... 128
Keys Creek:
Keys Creek tributary at Valley Center..... 129
San Luis Rey River near Bonsall..... 130
San Luis Rey River at Oceanside..... 131
SANTA MARGARITA RIVER BASIN
Temecula Creek (head of Santa Margarita River) near Aguanga..... 132
Temecula Creek at Vail Dam..... 133
Murrieta Creek at Temecula..... 134
Santa Margarita River near Temecula..... 135
Santa Margarita River near Fallbrook..... 136
Santa Margarita River at Ysidora..... 137
LAS FLORES CREEK BASIN
Las Flores Creek near Oceanside..... 138
SAN JUAN CREEK BASIN
San Juan Creek at San Juan Capistrano..... 139
Arroyo Trabuco:
Oso Creek at Crown Valley Parkway, near Mission Viejo..... 140
Arroyo Trabuco at San Juan Capistrano..... 141
ALISO CREEK BASIN
Aliso Creek at El Toro..... 142
PETERS CANYON WASH BASIN
Peters Canyon Wash:
San Diego Creek near Irvine..... 143
SANTA ANA RIVER BASIN
Santa Ana River:
Bear Creek:
Big Bear Lake near Big Bear Lake..... 145
Santa Ana River near Mentone..... 146
Santa Ana River spreading diversion near Mentone..... 148
Mill Creek near Yucaipa..... 149
Plunge Creek near East Highlands..... 151
Warm Creek:
City Creek near Highland..... 153
San Timoteo Creek:
Little San Gorgonio Creek near Beaumont..... 155
San Timoteo Creek near Loma Linda..... 156
Warm Creek:
East Twin Creek near Arrowhead Springs..... 157
Waterman Canyon Creek near Arrowhead Springs..... 158
Warm Creek Floodway at San Bernardino..... 159
San Bernardino Water Quality Control Plant at San Bernardino..... 160
Santa Ana River at E Street, near San Bernardino..... 161
Warm Creek:
Meeks and Daley Canal near Colton..... 162
Lytle Creek near Fontana..... 163
Cajon Creek:
Lone Pine Creek near Keenbrook..... 165
Cajon Creek below Lone Pine Creek, near Keenbrook..... 166
Devil Canyon Creek near San Bernardino..... 167
Lytle Creek at Colton..... 168
Santa Ana River at Mission Boulevard, at Riverside..... 169

Page

PACIFIC SLOPE BASINS IN CALIFORNIA--Continued
SANTA ANA RIVER BASIN--Continued
Santa Ana River at MWD Crossing, near Arlington..... 170
Riverside Water Quality Control Plant at Riverside Narrows, near Arlington 171
Santa Ana River at Riverside Narrows, near Arlington..... 172
Santa Ana River at Prado Park, near Corona..... 173
San Jacinto River:
Lake Hemet near Idyllwild..... 174
San Jacinto River near San Jacinto..... 175
Bautista Creek near Valle Vista..... 177
Perris Valley Storm Drain at Nuevo Road, near Perris..... 178
San Jacinto River at Railroad Canyon weir, near Elsinore..... 179
Salt Creek at Railroad Canyon Reservoir, near Elsinore..... 180
San Jacinto River near Elsinore..... 181
Temescal Creek near Corona..... 182
Temescal Creek at Corona..... 183
Chino Creek:
San Antonio Creek below San Antonio Dam..... 184
Chino Creek at Schaeffer Avenue, near Chino..... 185
Cucamonga Creek near Upland..... 186
Cucamonga Creek near Mira Loma..... 187
Santa Ana River below Prado Dam..... 188
Carbon Creek below Carbon Canyon Dam..... 189
Santiago Creek at Modjeska..... 190
Santiago Creek at Santa Ana..... 191
Santa Ana River at Santa Ana..... 192
SAN GABRIEL RIVER BASIN
East Fork San Gabriel River (head of San Gabriel River) near Camp Bonita.. 194
West Fork San Gabriel River at Camp Rincon..... 195
Fish Creek near Duarte..... 196
San Gabriel River below Santa Fe Dam, near Baldwin Park..... 197
Walnut Creek:
Dalton Creek:
San Dimas Creek below San Dimas Dam..... 198
San Jose Creek near El Monte..... 199
San Gabriel River above Whittier Narrows Dam..... 200
San Gabriel River at Pico..... 201
San Gabriel River at Spring Street, near Los Alamitos..... 202
Coyote Creek:
Brea Creek below Brea Dam, near Fullerton..... 203
Fullerton Creek below Fullerton Dam, near Brea..... 204
Fullerton Creek at Richman Avenue, at Fullerton..... 205
Coyote Creek at Los Alamitos..... 206
LOS ANGELES RIVER BASIN
Los Angeles River at Sepulveda Dam..... 207
Pacoima Creek near San Fernando..... 208
Tujunga Creek:
Mill Creek:
North Fork Mill Creek near La Canada..... 209
Tujunga Creek near Sunland..... 210
Little Tujunga Creek near San Fernando..... 211
Tujunga Creek below Hansen Dam..... 212
Los Angeles River at Los Angeles..... 213
Arroyo Seco near Pasadena..... 214
Los Angeles River near Downey..... 215
Rio Hondo above Whittier Narrows Dam..... 216
Rio Hondo near Montebello..... 217
Mission Creek near Montebello..... 218
Rio Hondo below Whittier Narrows Dam..... 219
Rio Hondo near Downey..... 220
Los Angeles River at Long Beach..... 221
BALLONA CREEK BASIN
Ballona Creek near Culver City..... 222
TOPANGA CREEK BASIN
Topanga Creek near Topanga Beach..... 223

Page

PACIFIC SLOPE BASINS IN CALIFORNIA--Continued
MALIBU CREEK BASIN
Malibu Creek at Crater Camp, near Calabasas..... 224
CALLEGUAS CREEK BASIN
Calleguas Creek:
Arroyo Simi near Simi..... 225
Conejo Creek above Highway 101, near Camarillo..... 226
Calleguas Creek at Camarillo State Hospital..... 227
SANTA CLARA RIVER BASIN
Santa Clara River above railroad station, near Lang..... 228
Bouquet Creek near Saugus..... 229
Castaic Creek near Saugus..... 230
Santa Clara River at Los Angeles-Ventura County line..... 231
Piru Creek below Thorn Meadows, near Stauffer..... 232
Lockwood Creek:
Middle Fork Lockwood Creek near Stauffer..... 233
Lockwood Creek at Gorge, near Stauffer..... 234
Piru Creek above Lake Piru..... 235
Lake Piru near Piru..... 236
Piru Creek near Piru..... 237
Hopper Creek near Piru..... 238
Sespe Creek near Wheeler Springs..... 239
Sespe Creek near Fillmore..... 240
Santa Paula Creek near Santa Paula..... 242
Saticoy diversion near Saticoy..... 243
Santa Clara River at Montalvo..... 244
VENTURA RIVER BASIN
Matilija Creek (head of Ventura River):
Matilija Reservoir at Matilija Hot Springs..... 245
Matilija Creek at Matilija Hot Springs..... 246
North Fork Matilija Creek at Matilija Hot Springs..... 247
Ventura River near Meiners Oaks..... 248
San Antonio Creek at Casitas Springs..... 249
Coyote Creek near Oak View..... 250
Santa Ana Creek near Oak View..... 251
Coyote Creek near Ventura..... 252
Ventura River near Ventura..... 253
CARPINTERIA CREEK BASIN
Carpinteria Creek near Carpinteria..... 255
FRANKLIN CREEK BASIN
Franklin Creek at Carpinteria..... 256
MISSION CREEK BASIN
Mission Creek near Mission Street, at Santa Barbara..... 257
Victoria Street drain at outlet, at Santa Barbara..... 258
ARROYO BURRO CREEK BASIN
Arroyo Burro Creek at Santa Barbara..... 259
Maria Ygnacio Creek at University Drive, near Goleta..... 260
Atascadero Creek near Goleta..... 261
SAN JOSE CREEK BASIN
San Jose Creek near Goleta..... 262
San Jose Creek at Goleta..... 263
GAVIOTA CREEK BASIN
Gaviota Creek near Gaviota..... 264
JALAMA CREEK BASIN
Jalama Creek near Lompoc..... 265
SANTA YNEZ RIVER BASIN
Santa Ynez River at Jameson Lake, near Montecito..... 266
Santa Ynez River above Gibraltar Dam, near Santa Barbara..... 267
Santa Ynez River below Gibraltar Dam, near Santa Barbara..... 268
Santa Ynez River below Los Laureles Canyon, near Santa Ynez..... 269
Santa Cruz Creek near Santa Ynez..... 270
Lake Cachuma near Santa Ynez..... 271
Santa Ynez River near Santa Ynez..... 272
Alamo Pintado Creek near Solvang..... 273

Page

PACIFIC SLOPE BASINS IN CALIFORNIA--Continued
SANTA YNEZ RIVER BASIN--Continued
Alisal Reservoir near Solvang 274
Santa Ynez River at Solvang 275
Zaca Creek near Buellton 276
Santa Ynez River near Buellton 277
Santa Ynez River at Cooper's Reef, near Lompoc 278
Salsipuedes Creek near Lompoc 279
Santa Ynez River at narrows, near Lompoc 280
Purisima Creek near Lompoc 281
Santa Ynez River at 13th Street, near Lompoc 282
Miguelito Creek at Lompoc 283
Santa Ynez River at Pine Canyon, near Lompoc 284
SAN ANTONIO CREEK BASIN
San Antonio Creek at Los Alamos 285
San Antonio Creek near Casmalia 286
SANTA MARIA RIVER BASIN
Cuyama River (head of Santa Maria River):
Wagon Road Creek near Stauffer 287
Reyes Creek near Ventucopa 289
Cuyama River below Buckhorn Canyon, near Santa Maria 290
Alamo Creek near Nipomo 291
Huasna River near Arroyo Grande 292
Cuyama River below Twitchell Dam 293
Sisquoc River near Sisquoc 294
La Brea Creek near Sisquoc 295
Foxen Creek near Sisquoc 296
Tepusquet Creek near Sisquoc 297
Sisquoc River near Garey 298
Bradley ditch near Donovan Road, at Santa Maria 299
Blosser ditch near Donovan Road, at Santa Maria 300
Santa Maria River at Guadalupe 301
ARROYO GRANDE BASIN
Arroyo Grande above Phoenix Creek, near Arroyo Grande 302
Wittenburg Creek near Arroyo Grande 303
Lopez Creek near Arroyo Grande 304
Tar Spring Creek near Arroyo Grande 305
Arroyo Grande at Arroyo Grande 306
Los Berros Creek near Nipomo 307
MORRO CREEK BASIN
Morro Creek at Morro Bay 308
TORO CREEK BASIN
Toro Creek near Morro Bay 309
ARROYO DE LA CRUZ BASIN
Arroyo de la Cruz near San Simeon 310
BIG SUR RIVER BASIN
Big Sur River near Big Sur 311
CARMEL RIVER BASIN
Carmel River at Robles del Rio 312
Carmel River near Carmel 313
Arroyo del Rey at Del Rey Oaks 314
SALINAS RIVER BASIN
Salinas River near Pozo 315
Toro Creek near Pozo 316
Salsipuedes Creek near Pozo 317
Santa Margarita Lake near Pozo 318
Salinas River above Pilitas Creek, near Santa Margarita 319
Jack Creek near Templeton 320
Santa Rita Creek near Templeton 321
Salinas River at Paso Robles 322
Estrella River near Estrella 323
Nacimiento River below Sapaque Creek, near Bryson 324
Reservoirs in Salinas River basin 325
Nacimiento River below Nacimiento Dam, near Bradley 326
San Antonio River near Lockwood 327

Page

PACIFIC SLOPE BASINS IN CALIFORNIA--Continued
SALINAS RIVER BASIN--Continued
Salinas River near Bradley..... 328
San Lorenzo Creek below Bitterwater Creek, near King City..... 329
Salinas River at Soledad..... 330
Arroyo Seco near Greenfield..... 331
Arroyo Seco near Soledad..... 332
Salinas River near Spreckels..... 333
El Toro Creek near Spreckels..... 334
TEMBLADERO SLOUGH BASIN
Reclamation ditch:
Alisal Creek near Salinas..... 335
Gabilan Creek near Salinas..... 336
Reclamation ditch near Salinas..... 337
PAJARO RIVER BASIN
Pajaro River:
Cedar Creek near Bell Station..... 338
Pacheco Creek near Dunneville..... 339
Llagas Creek above Chesbro Reservoir, near Morgan Hill..... 340
Reservoirs in Pajaro River basin..... 341
Pajaro River near Gilroy..... 342
Carnadero Creek:
Uvas Creek at Sveadal..... 343
Uvas Creek above Uvas Reservoir, near Morgan Hill..... 344
Bodfish Creek near Gilroy..... 345
Uvas Creek near Gilroy..... 346
San Benito River near Willow Creek School..... 347
Tres Pinos Creek near Tres Pinos..... 348
San Benito River near Hollister..... 349
San Benito River at State Highway 156, near Hollister..... 350
Pescadero Creek near Chittenden..... 351
Pajaro River at Chittenden..... 352
Corralitos Creek at Freedom..... 353
Pajaro River at Watsonville..... 354
APTOS CREEK BASIN
Aptos Creek near Aptos..... 355
SOQUEL CREEK BASIN
Soquel Creek at Soquel..... 356
SAN LORENZO RIVER BASIN
San Lorenzo River near Boulder Creek..... 357
Zayante Creek at Zayante..... 358
San Lorenzo River at Big Trees..... 359
MAJORS CREEK BASIN
Majors Creek near Santa Cruz..... 360
LAGUNA CREEK BASIN
Laguna Creek near Davenport..... 361
SAN VINCENTE CREEK BASIN
San Vincente Creek near Davenport..... 362
SCOTT CREEK BASIN
Scott Creek above Little Creek, near Davenport..... 363
PESCADERO CREEK BASIN
Pescadero Creek near Pescadero..... 364
Butano Creek near Pescadero..... 365
SAN GREGORIO CREEK BASIN
San Gregorio Creek at San Gregorio..... 366
PILARCITOS CREEK BASIN
Pilarcitos Creek at Half Moon Bay..... 367
COLMA CREEK BASIN
Colma Creek at South San Francisco..... 368
REDWOOD CREEK BASIN
Redwood Creek at Redwood City..... 369
SAN FRANCISQUITO CREEK BASIN
San Francisquito Creek at Stanford University..... 370
MATADERO CREEK BASIN
Matadero Creek at Palo Alto..... 371

Page

PACIFIC SLOPE BASINS IN CALIFORNIA--Continued
STEVENS CREEK BASIN
Stevens Creek Reservoir near Monte Vista..... 372
GUADALUPE RIVER BASIN
Reservoirs in Guadalupe River basin..... 373
Guadalupe River:
Ross Creek below Jarvis Road, at San Jose..... 374
Guadalupe River at San Jose..... 375
Saratoga Creek at Saratoga..... 376
CALABAZAS CREEK BASIN
Calabazas Creek:
Calabazas Creek tributary at Mt. Eden Road, near Saratoga..... 377
Prospect Creek at Saratoga Golf Course, near Saratoga..... 378
COYOTE CREEK BASIN
Coyote Creek near Gilroy..... 379
Reservoirs in Coyote Creek basin..... 380
Coyote Creek near Madrone..... 381
Upper Penitencia Creek at San Jose..... 382
ALAMEDA CREEK BASIN
Alameda Creek:
Calaveras Creek:
Arroyo Hondo near San Jose..... 383
Arroyo de la Laguna:
Arroyo Mocho near Livermore..... 384
Arroyo Las Positas above Livermore..... 385
Arroyo Mocho near Pleasanton..... 386
Arroyo Valle above Lang Canyon, near Livermore..... 387
Arroyo Valle near Livermore..... 388
Arroyo Valle at Pleasanton..... 389
Arroyo de la Laguna near Pleasanton..... 390
Alameda Creek near Niles..... 391
Dry Creek at Union City..... 392
Patterson Creek at Union City..... 393
Alameda Creek at Union City..... 394
SAN LORENZO CREEK BASIN
San Lorenzo Creek at Hayward..... 395
Castro Valley Creek at Hayward..... 396
San Lorenzo Creek at San Lorenzo..... 397
PERALTA CREEK BASIN
Peralta Creek at Oakland..... 398
CASTRO CREEK BASIN
Castro Creek:
Wildcat Creek at Richmond..... 399
RHEEM CREEK BASIN
Rheem Creek at San Pablo..... 400
PINOLE CREEK BASIN
Pinole Creek at Pinole..... 401
ARROYO DEL HAMBRE BASIN
Arroyo del Hambre at Martinez..... 402
PACHECO CREEK BASIN
Walnut Creek (head of Pacheco Creek):
San Ramon Creek at San Ramon..... 403
San Ramon Creek at Walnut Creek..... 404
Walnut Creek at Concord..... 405
NAPA RIVER BASIN
Napa River near St. Helena..... 406
Conn Creek near Oakville..... 407
Napa River near Napa..... 408
Milliken Creek near Napa..... 409
Redwood Creek (head of Napa Creek) near Napa..... 410
Napa Creek at Napa..... 411
Tulucay Creek at Napa..... 412
SONOMA CREEK BASIN
Sonoma Creek at Agua Caliente..... 413

Page

PACIFIC SLOPE BASINS IN CALIFORNIA--Continued
NOVATO CREEK BASIN
Novato Creek at Novato..... 414
SAN RAFAEL CREEK BASIN
San Rafael Creek at San Rafael..... 415
Irwin Creek at San Rafael..... 416
CORTE MADERA CREEK BASIN
Corte Madera Creek at Ross..... 417
ARROYO CORTE MADERA DEL PRESIDIO BASIN
Arroyo Corte Madera del Presidio at Mill Valley..... 418
WALKER CREEK BASIN
Walker Creek near Tomales..... 419
SALMON CREEK BASIN
Salmon Creek at Bodega..... 420
RUSSIAN RIVER BASIN
Russian River near Ukiah..... 421
East Fork Russian River near Calpella..... 422
Lake Mendocino near Ukiah..... 423
East Fork Russian River near Ukiah..... 424
Russian River near Hopland..... 425
Russian River near Cloverdale..... 426
Maacama Creek near Kellogg..... 427
Russian River near Healdsburg..... 428
Dry Creek near Cloverdale..... 429
Dry Creek near Geyserville..... 430
Santa Rosa Creek:
Laguna de Santa Rosa near Graton..... 431
Russian River near Guerneville..... 432
GARCIA RIVER BASIN
Garcia River near Point Arena..... 433
NAVARRO RIVER BASIN
Navarro River near Navarro..... 434
NOYO RIVER BASIN
Noyo River near Fort Bragg..... 435
TENMILE RIVER BASIN
Tenmile River:
Middle Fork Tenmile River near Fort Bragg..... 436
MATTOLE RIVER BASIN
Mattole River:
Honeydew Creek near Honeydew..... 437
Mattole River near Petrolia..... 438
EEL RIVER BASIN
Lake Pillsbury near Potter Valley..... 439
Eel River below Scott Dam, near Potter Valley..... 440
Potter Valley powerhouse tailrace near Potter Valley..... 441
Eel River at Van Arsdale Dam, near Potter Valley..... 442
Eel River near Dos Rios..... 443
Outlet Creek near Longvale..... 444
Middle Fork Eel River:
Black Butte River near Covelo..... 445
Elk Creek near Hearst..... 446
Middle Fork Eel River near Dos Rios..... 447
North Fork Eel River near Mina..... 448
Chamise Creek near Island Mountain..... 449
Eel River at Fort Seward..... 450
Dobbyn Creek near Fort Seward..... 451
South Fork Eel River:
Elder Creek near Branscomb..... 452
Tenmile Creek near Laytonville..... 453
South Fork Eel River at Leggett..... 456
South Fork Eel River near Miranda..... 457
Bull Creek near Weott..... 458
Eel River at Scotia..... 459
Van Duzen River near Dinsmores..... 460
Van Duzen River near Bridgeville..... 461

Page

PACIFIC SLOPE BASINS IN CALIFORNIA--Continued
MAD RIVER BASIN
Ruth Reservoir near Forest Glen 462
Mad River near Forest Glen 463
Mad River near Kneeland 464
Mad River near Blue Lake 465
North Fork Mad River near Korbel 466
Mad River near Arcata 467
LITTLE RIVER BASIN
Little River near Trinidad 468
REDWOOD CREEK BASIN
Redwood Creek near Blue Lake 469
Redwood Creek at South Park boundary, near Orick 470
Redwood Creek at Orick 471
LOST RIVER BASIN (CLOSED BASIN ADJACENT TO KLAMATH RIVER BASIN)
BUTTE VALLEY BASIN (CLOSED BASIN ADJACENT TO KLAMATH RIVER BASIN)
Butte Creek:
Antelope Creek near Tennant 472
KLAMATH RIVER BASIN
Klamath River below John C. Boyle powerplant, near Keno, Oreg 473
Reservoirs in Klamath River basin 474
Klamath River below Iron Gate Dam 475
Shasta River:
Little Shasta River near Montague 476
Shasta River near Yreka 477
Scott River:
East Fork Scott River below Houston Creek, near Callahan 478
East Fork Scott River above Kangaroo Creek, near Callahan 479
East Fork Scott River at Callahan 480
Cedar Gulch near Callahan 481
Scott River near Fort Jones 482
Klamath River near Seiad Valley 483
Indian Creek near Happy Camp 484
Salmon River at Somes Bar 485
Klamath River at Orleans 486
Trinity River above Coffee Creek, near Trinity Center 487
Clair Engle Lake near Lewiston 488
Judge Francis Carr powerplant near French Gulch 489
Trinity River at Lewiston 490
North Fork Trinity River at Helena 491
Trinity River near Burnt Ranch 492
South Fork Trinity River:
Hayfork Creek near Hyampom 493
South Fork Trinity River below Hyampom 494
Willow Creek near Willow Creek 495
Trinity River at Hoopa 496
Blue Creek near Klamath 497
Klamath River near Klamath 498
SMITH RIVER BASIN
Smith River near Crescent City 499

WATER RESOURCES DATA FOR CALIFORNIA, 1973

PART 1. SURFACE-WATER RECORDS

INTRODUCTION

Surface-water records for the 1973 water year for California, including records of streamflow or reservoir storage at gaging stations, partial-record stations, and miscellaneous sites, are given in this report. Records for a few pertinent gaging stations in bordering States also are included. The records were collected and computed by the Water Resources Division of the U.S. Geological Survey under the direction of Lee R. Peterson, district chief. These data represent that portion of the National Water Data System collected by the Geological Survey and cooperating State and Federal agencies in California.

Beginning with the 1961 water year, streamflow records and related data have been released by the Geological Survey in annual reports on a State-boundary basis. These reports are for limited distribution and are designed primarily for rapid release of data shortly after the end of the water year.

Records of discharge and stage of streams, and contents and stage of lakes and reservoirs are published in a series of U.S. Geological Survey water-supply papers entitled, "Surface Water Supply of the United States." Through September 30, 1960, these water-supply papers were in an annual series and since then are in a 5-year series. More information is given under the heading "Publications" on page 9.

COOPERATION

The U.S. Geological Survey and organizations of the State of California have had cooperative agreements for the systematic collection of surface-water records since 1903. Organizations that supplied data are acknowledged in station descriptions. Organizations that assisted in collecting data through cooperative agreement with the Survey are:

California Department of Water Resources, J. R. Teerink, director.
California Department of Transportation, C. G. Beer, office engineer.
Alameda County Flood Control and Water Conservation District, P. E. Lanferman, engineer-manager.
Alameda County Water District, M. P. Whitfield, general manager-chief engineer.
Berrenda Mesa Water District, H. R. Lampson, engineer-manager.
Casitas Municipal Water District, Robert McKinney, general manager-chief engineer.
Coachella Valley County Water District, L. O. Weeks, general manager-chief engineer.
Contra Costa County Flood Control and Water Conservation District, C. C. Rich, chief engineer.
Desert Water Agency, P. G. Payne, general manager.
East Bay Municipal Utility District, J. S. Harnett, general manager.
Georgetown Divide Public Utility District, C. F. Gierau, general manager.
Imperial Irrigation District, R. F. Carter, general manager.
Kern County Water Agency, S. T. Pyle, engineer-manager.
Lake County Flood Control and Water Conservation District, W. D. Hansen, manager.
Los Angeles County Flood Control District, C. F. Eshelby, division engineer.
Los Angeles Department of Water and Power, J. V. Phillips, general manager and chief engineer.
Madera Irrigation District, F. G. Bandy, secretary-manager.
Merced Irrigation District, K. R. McSwain, chief engineer and manager.
Modoc County Department of Public Works, J. K. Grove, director.
Montecito County Water District, E. A. Elevatorski, general manager.
Monterey County Flood Control and Water Conservation District, Loran Bunte, Jr., district engineer.
Napa County Flood Control and Water Conservation District, Gene Norris, chairman.
Orange County Flood Control District, H. G. Osborne, chief engineer.
Oroville-Wyandotte Irrigation District, J. W. McDonald, general manager.
Paradise Irrigation District, C. P. Kelly, manager.
Rio San Diego Municipal Water District, E. W. Houser, manager-engineer.
Riverside County Flood Control and Water Conservation District, J. W. Bryant, chief engineer.
Sacramento County Department of Public Works, Water Resources Division, J. P. Alessandri, chief.
San Benito County Water Conservation and Flood Control District, R. G. Towle, secretary.
San Bernardino Valley Municipal Water District, J. A. Beaver, general manager.
San Diego, City of, Water Utilities, R. E. Dodson, director.
San Diego, County of, Department of Sanitation and Flood Control, C. J. Houson, director.
San Francisco, City and County, Hetch Hetchy Water and Power, O. L. Moore, general manager.
San Francisco, City and County Water Department, A. H. Frye, Jr., general manager and chief engineer.
San Luis Obispo County Engineering Department, G. C. Protopapas, county engineer.
San Mateo County Flood Control District, V. K. Sanders, manager.
San Rafael, City of, Department of Public Works, Ely Caillovette, Jr., director.

Santa Barbara City Water Department, Neil Mendenall, superintendent.
Santa Barbara County Flood Control and Water Conservation District, James Stubchaer, flood-control engineer.
Santa Barbara County Water Agency, F. H. Beattie, board of directors chairman.
Santa Clara Valley Water District, J. T. O'Halloran, general manager.
Santa Cruz County Flood Control and Water Conservation District, D. A. Porath, district engineer.
Santa Maria Valley Water Conservation District, M. F. Twitchell, secretary.
Santa Ynez River Conservation District, A. T. Petersen, president.
Siskiyou County Flood Control and Water Conservation District, D. A. Gravenkamp, director of public works.
Tehachapi-Cummings County Water District, R. J. Jasper, general manager.
Terra Bella Irrigation District, J. E. Boudreau, engineer-manager.
Tulare County Flood Control District, J. L. Carlsen, flood-control engineer.
Turlock Irrigation District, R. S. Tillner, secretary-general manager.
United Water Conservation District, R. A. Smith, general manager-chief engineer.
University of California (Berkeley), A. S. Leopold, professor of zoology.
University of California (Davis), Division of Environmental Studies, Dr. Robert Leonard, department of zoology.
Ventura County Department of Public Works, J. B. Quinn, deputy director.
Western Municipal Water District, H. A. Hicks, general manager.
Woodbridge Irrigation District, Mabel Hall, secretary.
Yolo County Flood Control and Water Conservation District, W. L. McAnlis, manager.

Assistance in the form of funds or services was given by the Corps of Engineers, U.S. Army; U.S. Navy; Bureau of Reclamation and National Park Service, U.S. Department of the Interior; Forest Service and Soil Conservation Service, U.S. Department of Agriculture; U.S. Atomic Energy Commission.

The following organizations aided in collecting records: Pacific Power and Light Co., Bear Valley Mutual Water Co., Metropolitan Water District of Southern California, Fontana Union Water Co., Rancho California, Pacific Gas and Electric Co., Placer County Water Agency, Sacramento Municipal Utility District, Southern California Edison Co., Merced, Modesto, Nevada, Oroville-Wyandotte, Oakdale-South San Joaquin, and Vista Irrigation Districts, and Yuba County Water Agency.

DEFINITION OF TERMS

Terms related to streamflow and other hydrologic data, as used in this report, are defined below. See also table for converting English units to International System of units (SI) on page 14.

Acre-foot (AC-FT, acre-ft) is the quantity of water required to cover 1 acre to a depth of 1 foot and is equivalent to 43,560 cubic feet or 325,851 gallons or 1,233 cubic metres.

Cfs-day is the volume of water represented by a flow of 1 cubic foot per second for 24 hours. It is equivalent to 86,400 cubic feet, 1.9835 acre-feet, or 646,317 gallons or 2,445 cubic metres. It represents a runoff of 0.0372 inch from 1 square mile or 0.3468 millimetre from 1 square kilometre.

Contents is the volume of water in a reservoir or lake. Unless otherwise indicated, volume is computed on the basis of a level pool and does not include bank storage.

Control designates a feature downstream from the gage that determines the stage-discharge relation at the gage. This feature may be a natural constriction of the channel, an artificial structure, or a uniform cross section over a long reach of the channel.

Cubic foot per second (CFS, cfs) is the rate of discharge representing a volume of 1 cubic foot passing a given point during 1 second, and is equivalent to 7.48 gallons per second or 448.8 gallons per minute or 0.02832 cubic metres per second.

Discharge is the volume of water (or more broadly, total fluids), that passes a given point within a given period of time.

Mean discharge is the arithmetic average of individual daily mean discharges during a specific period.

Instantaneous discharge is the discharge at a given time.

Drainage area of a stream at a specified location is that area, measured in a horizontal plane, enclosed by a topographic divide from which direct surface runoff from precipitation normally drains by gravity into the stream above the specified point. Figures of drainage area given herein include all closed basins, or noncontributing areas, within the area unless otherwise noted.

Gage height is the water-surface elevation referred to some arbitrary gage datum. Gage height is often used interchangeably with the more general term "stage," although gage height is more appropriate when used with a reading on a gage.

Gaging station is a particular site on a stream, canal, lake, or reservoir where systematic observations of gage height or discharge are obtained. When used in connection with a discharge record, the term is applied only to those gaging stations where a continuous record of discharge is computed.

Partial-record station is a particular site where limited streamflow data are collected systematically over a period of years for use in hydrologic analyses.

Stage-discharge relation is the relation between gage height and the volume of water per unit of time, flowing in a channel.

WRD is used as an abbreviation for "Water-Resources Data" in the summary REVISIONS paragraph to refer to previously published State annual basic-data reports.

WSP is used as an abbreviation for "Water-Supply Paper" in references to previously published reports.

SPECIAL NETWORKS AND PROGRAMS

Hydrologic bench-mark station is one that provides hydrologic data for a basin in which the hydrologic regimen will likely be governed solely by natural conditions. Data collected at a bench-mark station may be used to separate effects of natural from manmade changes in other basins which have been developed and in which the physiography, climate, and geology are similar to those in the undeveloped bench-mark basin.

International Hydrological Decade (IHD) River Stations provide a general index of runoff and materials in the water balance (discharge of water, and dissolved and transported solids) of the world. In the United States, IHD Stations provide indices of runoff and of the general distribution of water in the principal river basins of the conterminous United States and Alaska.

DOWNSTREAM ORDER AND STATION NUMBERS

Records are listed in a downstream direction along the main stream, and stations on tributaries are listed between stations on the main stream in the order in which those tributaries enter the main stream. Stations on tributaries entering above all mainstream stations are listed before the first mainstream station. Stations on tributaries to tributaries are listed in a similar manner. In the list of gaging stations in the front of this report the rank of tributaries is indicated by indention, each indention representing one rank.

As an added means of identification, each gaging station and partial-record station has been assigned a station number. These are in the same downstream order used in this report. In assigning station numbers, no distinction is made between partial-record stations and continuous-record gaging stations; therefore, the station number for a partial-record station indicates downstream order position in a list made up of both types of stations. Gaps are left in the series numbers to allow for new stations that may be established; hence the numbers are not consecutive. The complete 8-digit station number for each station, such as 11120800, which appears to the left of the station name includes the 2-digit part number "11" plus the 6-digit number "120800." In this report, the records are listed in downstream order by parts. The part number refers to an area whose boundaries coincide with certain natural drainage lines. Records in this report are in Part 9 (Colorado River basin), Part 10 (The Great Basin), and Part 11 (Pacific Slope basins in California. All records for a drainage basin encompassing more than one State can be arranged in downstream order by assembling pages from the various State reports by station number to include all records in the basin.

EXPLANATION OF SURFACE-WATER DATA

Collection and Computation of Data

The base data collected at gaging stations consist of records of stage and measurements of discharge of streams or canals, and stage, surface area, and contents of lakes or reservoirs. In addition, observations of factors affecting the stage-discharge relation or the stage-capacity relation, weather records, and other information are used to supplement base data in determining the daily flow or volume of water in storage. Records of stage are obtained from direct readings on a nonrecording gage or from a water-stage recorder that gives a continuous graph of the fluctuations or a tape punched at 15-, 30-, or 60-minute intervals. Measurements of discharge are made with a current meter, using the general methods adopted by the Geological Survey on the basis of experience in stream gaging since 1888. These methods are described in standard textbooks, in Water-Supply Paper 888, and in U.S. Geological Survey

Techniques of Water Resources Investigations, book 3, chapter A6. Surface areas of lakes or reservoirs are determined from instrument surveys using standard methods. The configuration of the reservoir bottom is determined by sounding at many points.

For a stream-gaging station rating tables giving the discharge for any stage are prepared from stage-discharge relation curves defined by discharge measurements. If extensions to the rating curves are necessary to define the extremes of discharge, they are made on the basis of indirect measurements of peak discharge (such as slope-area or contracted-opening measurements, computation of flow over dams or weirs), velocity-area studies and logarithmic plotting. The daily mean discharge is computed from gage heights and rating tables, then the monthly and yearly mean discharges are computed from the daily figures. If the stage-discharge relation is subject to change because of frequent or continual change in the physical features that form the control, the daily mean discharge is determined by the shifting-control method, in which correction factors based on individual discharge measurements and notes by engineers and observers are used in applying the gage heights to the rating tables. If the stage-discharge relation for a station is temporarily changed by the presence of aquatic growth or debris on the control, the daily mean discharge is computed by what is basically the shifting-control method.

At some stream-gaging stations the stage-discharge relation is affected by backwater from reservoirs, tributary streams, or other sources. This necessitates the use of the slope method in which the slope or fall in a reach of the stream is a factor in determining discharge. The slope or fall is obtained by means of an auxiliary gage set at some distance from the base gage. At some stations the stage-discharge relation is affected by changing stage; at these stations the rate of change in stage is used as a factor in computing discharge.

At some stream-gaging stations the stage-discharge relation is affected by ice in the winter, and it becomes impossible to compute the discharge in the usual manner. Discharge for periods of ice effect is computed on the basis of the gage-height record and occasional winter discharge measurements, consideration being given to the available information on temperature and precipitation, notes by gage observers and hydrologists, and comparable records of discharge for other stations in the same or nearby basins.

For a lake or reservoir station, capacity tables giving the contents for any stage are prepared from stage-area relation curves defined by surveys. The application of the stage to the capacity table gives the contents, from which the daily, monthly, or yearly change in contents is computed.

If the stage-capacity curve is subject to changes because of deposition of sediment in the reservoir, periodic resurveys of the reservoir are necessary to define new stage-capacity curves. During the period between reservoir surveys the computed contents may be increasingly in error due to the gradual accumulation of sediment.

For some gaging stations there are periods when no gage-height record is obtained or the recorded gage height is so faulty that it cannot be used to compute daily discharge or contents. This happens when the recorder stops or otherwise fails to operate properly, intakes are plugged, the float is frozen in the well, or for various other reasons. For such periods the daily discharges are estimated on the basis of recorded range in stage, adjoining good record, discharge measurements, weather records, and comparison with other station records from the same or nearby basins. Likewise daily contents may be estimated on the basis of operator's log adjoining good record, inflow-outflow studies, and other information.

The data in this report generally comprise a description of the station and tabulations of basic data. For gaging stations on streams or canals a table showing the daily discharge and monthly and yearly discharge is given. For gaging stations on lakes and reservoirs a monthly summary table of stage and contents or a table showing the daily contents is given. Tables of daily mean gage heights are included for some streamflow stations and for some reservoir stations. Records are published for the water year, which begins on October 1 and ends on September 30. A calendar for the current water year is shown on the reverse side of the front cover to facilitate finding the day of the week for any date.

The description of the gaging station gives the location, drainage area, period of record, type and history of gages, average discharge, extremes of discharge or contents, general remarks, and notations of revisions of previously published records. The location of the gaging station and the drainage area are obtained from the most accurate maps available. River mileage, given under "LOCATION" for some stations, is that determined and used by the Corps of Engineers or other agencies. Periods for which there are published records for the present station or for stations generally equivalent to the present one are given under "PERIOD OF RECORD." The type of gage currently in use, the datum of the present gage above mean sea level, and a condensed history of the types, locations, and datums of previous gages used during the period of record are given under "GAGE." In references to datum of gage, the phrase "mean sea level" denotes "Sea Level Datum of 1929" as used by the Topographic Division of the Geological Survey, unless otherwise qualified. The average discharge for the number of years indicated is given under "AVERAGE DISCHARGE"; it is not given for stations having fewer than 5 complete years of record or for stations where changes in water development during the period of record cause the figure to have little significance. The maximum discharge (or contents) and the maximum gage height, the minimum discharge if there is little or no regulation (or the minimum contents), and the minimum gage height if it is significant are given under "EXTREMES." The minimum daily discharge is given if there is extensive regulation (also the minimum discharge and gage height if they are abnormally low). In the first paragraph headed "Current year:" the data given are for the complete current water year unless otherwise specified. In the second paragraph under "EXTREMES" headed "Period of record:" the data given are for the period of record given in the PERIOD OF RECORD paragraph. Reliable information concerning major floods that occurred outside the period of record is given in the third or last paragraph under "EXTREMES." Unless otherwise qualified, the maximum discharge (or contents) corresponds to the crest stage obtained by use of a water-stage recorder (graphic or digital), a crest-stage gage, or a nonrecording gage read at the time of the crest. If the maximum gage height did not occur at the same time as the maximum discharge or maximum contents, it is given separately. Information pertaining to the accuracy of the discharge records, to conditions that affect the natural flow at the gaging station, and availability of Water Quality records, is given under "REMARKS"; for reservoir stations information on the dam forming the reservoir, the capacity, outlet works and spillway, and purpose and use of the reservoir, is also given under "REMARKS."

Previously published records of some stations have been found to be in error on the basis of data or information later obtained. Revisions of such records are usually published along with the current records in one of the annual or compilation reports. In order to make it easier to find such revised records, a paragraph headed "REVISIONS (WATER YEARS)" has been added to the description of all stations for which revised records have been published. Listed therein are all the reports in which revisions have been published, each followed by the water years for which figures are revised in that report. In listing the water years only one number is given; for instance, 1933 stands for the water year October 1, 1932, to

September 30, 1933. If no daily, monthly, or annual figures of discharge were revised, that fact is brought out by notations after the year dates as follows: "(M)" means that only the instantaneous maximum discharge was revised; "(m)" that only the instantaneous minimum was revised; and "(P)" that only peak discharges were revised. If the drainage area has been revised, the report in which the revised figure was first published is given.

Skeleton rating tables are published for stream-gaging stations where they serve a useful purpose and the dates of applicability can be easily identified.

Skeleton capacity tables are published for all reservoirs for which records of contents are published on a daily basis.

The daily table for stream-gaging stations gives the mean discharge for each day and is followed by monthly and yearly summaries. In the monthly summary below the daily table, the line headed "TOTAL" gives the sum of the daily figures. The line headed "MEAN" gives the average flow in cubic feet per second during the month. The lines headed "MAX" and "MIN" give the maximum and minimum daily discharges, respectively, for the month. Discharge for the month also may be expressed in acre-feet (line headed "AC-FT").

In the yearly summary below the monthly summary, the figures following "MAX" are the maximum daily discharges for the calendar and water years; likewise, those following "MIN" are the minimum daily discharges.

Footnotes to the table of daily discharges are introduced by the word "NOTE." Footnotes are used to indicate periods for which the discharge is computed or estimated by special methods because of no gage-height record, backwater from various sources, or other unusual conditions. Periods of no gage-height record are indicated if the period is continuous for a month or more or includes the maximum discharge for the year. Periods of backwater from an unusual source, of indefinite stage-discharge relation, or of any other unusual condition at the gage site are indicated only if they are a month or more in length and the accuracy of the records is affected. Days on which the stage-discharge relation is affected by ice are not indicated. The methods used in computing discharge for various unusual conditions have been explained in preceding paragraphs.

Peak discharges and their times of occurrence and corresponding gage heights for many stations are listed below the yearly summary. All independent peaks above the selected base are given. The base discharge, which is given in parentheses, is selected so that an average of about three peaks a year can be presented. Peak discharges are not published for any canals, ditches, drains, or for any stream for which the peaks are subjected to substantial control by man. Time of day is expressed in 24-hour local standard time; for example, 12:30 a.m. is 0030, 1:30 p.m. is 1330.

For most gaging stations on lakes and reservoirs the data presented comprise a description of the station and a monthly summary table of stage and contents. For some reservoirs a table showing daily contents or stage is given. A skeleton table of capacity at given stages is published for all reservoirs for which records are published on a daily basis, but is not published for reservoirs for which only monthly data are given.

Data collected at partial-record stations and miscellaneous sites are given in three tables at the end of the surface-water records in this report. The first is a table of discharge measurements at low-flow partial-record stations, the second is a table of annual maximum stage and discharge at crest-stage stations, and the third is a table of discharge measurements at miscellaneous sites.

Accuracy of Data

The accuracy of discharge data depends primarily on (1) the stability of the stage-discharge relation or, if the control is unstable, the frequency of discharge measurements, and (2) the accuracy of observations of stage, measurements of discharge, and interpretation of records.

The station description under "REMARKS" states the degree of accuracy of the records. "Excellent" means that about 95 percent of the daily discharges is within 5 percent; "good" within 10 percent; and "fair" within 15 percent. "Poor" means that daily discharges have less than "fair" accuracy.

Figures of daily mean discharge in this report are shown to the nearest hundredth of a cubic foot per second for discharges of less than 1 cfs; to tenths between 1.0 and 10 cfs; to whole numbers between 10 and 1,000 cfs; and to 3 significant figures above 1,000 cfs. The number of significant figures used is based solely on the magnitude of the figure. The same rounding rules apply to discharge figures listed for partial-record stations and miscellaneous sites.

Discharge at many stations, as indicated by the monthly mean, may not reflect natural runoff due to the effects of diversion, consumptive use, regulation, evaporation, or other factors. Evaporation from a reservoir is not included in the adjustments for changes in reservoir contents, unless it is so stated. Even at those stations where adjustments are made, large errors in computed runoff may occur if adjustments or unadjusted losses (consumptive use, evaporation, seepage, etc.) are large in comparison with the observed discharge.

Publications

In each water-supply paper entitled, "Surface Water Supply of the United States" there is a list of numbers of preceding water-supply papers containing streamflow information for the area covered by that report. In addition, there is a list of numbers of water-supply papers containing detailed information on major floods in the area. Records for stations in California for the period October 1960 to September 1965 are in Water-Supply Papers 1926, 1927, 1928, 1929, 1930, and 1931.

Two series of summary reports entitled, "Compilation of Records of Surface Waters of the United States" have been published; the first series covers the entire period of record through September 1950 and the second series covers the period October 1950 to September 1960. These reports contain summaries of monthly and annual discharge and monthend storage for all previously published records, as well as some records not contained in the annual series of water-supply papers. All records were reexamined and revised where warranted. Estimates of discharge were made to fill short gaps whenever practical. The yearly summary table for each gaging station lists the numbers of the water-supply papers in which daily records were published for that station. Records for stations in California are compiled in Water-Supply Papers 1313, 1314, 1315-A, and 1315-B through September 1950, and in 1733, 1734, and 1735 for October 1950 to September 1960.

Special reports on major floods or droughts or of other hydrologic studies for the area have been issued in publications other than water-supply papers. Information relative to these reports may be obtained from the district office.

Other Data Available

Occasionally, discharge measurements are made within a short time period to investigate the seepage gains or losses along a reach of a stream or to determine the low-flow characteristics of an area. Such measurements are also at the end of this report. Data for most crest-stage partial-record stations in California are not included in this report. They are published separately in an annual report, "Floods from Small Drainage Areas," copies of which may be obtained from the district office.

More detailed information than that published for most of the gaging stations, such as discharge measurements, gage-height records, and rating tables, is on file in the district office. Many gaging-station records in California through 1958 have been analyzed to give several statistical summaries: (1) the number of days in each year that the daily discharge was between selected limits (duration tables); (2) the lowest mean discharge for selected numbers of consecutive days in each year; and (3) the highest mean discharge for selected numbers of consecutive days in each year.

At or near some gaging stations, water-quality records also are collected. Data are obtained on the chemical quality of the stream water, on water temperature, on suspended-sediment concentration, and on the particle-size distribution of suspended sediment and bed material. These data are given in Part 2 of this report. Under the "REMARKS" paragraph of the gaging-station description, reference is made to water-quality records collected on a regular basis.

Records of discharge collected by agencies other than the Geological Survey

Records of discharge not published by the Geological Survey have been collected at numerous sites by many other Federal, State, County, City, and local agencies, and by private organizations. A listing of stream-gaging stations and the agencies operating them is published in California Department of Water Resources Bulletin 157, "Index of Stream-Gaging Stations in and Adjacent to California." The Office of Water Data Coordination, Water Resources Division, U.S. Geological Survey, Reston, Virginia, 22092, maintains an index of such sites. Information on records at specific sites can be obtained upon request.

HYDROLOGIC CONDITIONS

Runoff during the year was above normal for most river basins in California and was below normal only in the river basins in extreme north-coastal California. The runoff distribution over the state was influenced by several major storms that caused heavy precipitation over the central and southern areas. High snowmelt runoff occurred in central and southern Sierra Nevada watersheds from an above-average snowpack that persisted well into May.

Storms October 9-18 brought heavy rain to the Sierra Nevada and to the California coast from the Oregon border to San Luis Obispo. The storms then moved southward and caused heavy rain along the central coast. Rainfall in San Francisco was reported to be the highest for October for more than 80 years. Severe flooding occurred in urban areas in and around San Francisco causing heavy property damage and one death. Heavy rains in the Big Sur State Park caused landslides which destroyed or damaged about 13 houses and some park buildings. Slides blocked coastal State Highway 1 several times. In southern California, intense precipitation occurred October 8 and 19, and as much as 1.5 inches of rain fell at the Los Angeles International Airport in 1 hour. Minor flooding occurred in some areas.

Moderate to heavy rains in November increased the seasonal precipitation 2 to 6 times normal except in the extreme north-coastal area. Runoff in November was above normal, but was deficient in north-coastal California. Local flooding and mudslides occurred in the Coast Range. Mudslides recurred in the Big Sur area and were more severe than in October.

Storms in December were accompanied by recordbreaking cold. Precipitation in the form of snow fell in many places in the Central Valley and San Francisco Bay areas and added to the snowpack in the Sierra Nevada. Runoff, however, was generally below normal.

Heavy rains fell throughout California during a 2-week period in the middle of January and were the heaviest along the central coast. Runoff was excessive or above normal for January throughout California, except for the north-coastal area where it continued to be deficient. The snowpack at higher elevations continued to be at or above normal.

Precipitation was near normal in March. However, owing to the heavy rains in the previous month, runoff continued to be excessive along the central coast and above normal elsewhere, except in the north-coastal area where it was nearly normal.

The months of April and May were dry with generally low temperatures which retarded snowmelt. Runoff was generally above or near normal in most areas, but was deficient in the north-coastal area.

Higher temperatures in late May and June caused rapid melting of the snowpack which produced excessive runoff in the southern Sierra Nevada and mountain areas in southern California. Runoff was near normal in the northern Sierra Nevada as the snowpack at the lower elevations had been depleted previously. Runoff in the north-coastal area continued to be deficient.

During the remainder of the water year, the runoff declined seasonally, but heavy rains in September in the north-coastal area produced excessive runoff in that area.

Runoff from the above-normal precipitation in the central and southern Sierra Nevada and other high mountain areas maintained the contents of most reservoirs above normal, with above normal holdover for the 1974 water year.

The areal trends in the total runoff in California for the 1973 water year is shown in figure 1, where runoff is given as a percentage of the median annual runoff for the 30-year period, 1941-70. The circled figures on the map are the percentages for index stream-gaging stations in the various hydrographic areas. The north-coastal area was the only area in which the runoff was below average. The runoff of over 300 percent of average in the south-coastal area was the highest in the State, while the

runoff was more than 200 percent of average in the San Francisco Bay and central-coastal areas, and well above normal in the Sacramento and San Joaquin areas. The average runoff at all of the index stations in the State was 184 percent of average.

SELECTED REFERENCES

Carter, R. W., and Davidian, Jacob, 1968, General procedure for gaging streams: U.S. Geol. Survey Techniques Water-Resources Inv., book 3, chap. A6, 13 p.

Corbett, D. M., and others, 1943, Stream-gaging procedure, a manual describing methods and practices of the Geological Survey: U.S. Geol. Survey Water-Supply Paper 888, 245 p.

Langbein, W. B., and Iseri, K. T., 1960, General introduction and hydrologic definitions: U.S. Geol. Survey Water-Supply Paper 1541-A, 29 p.

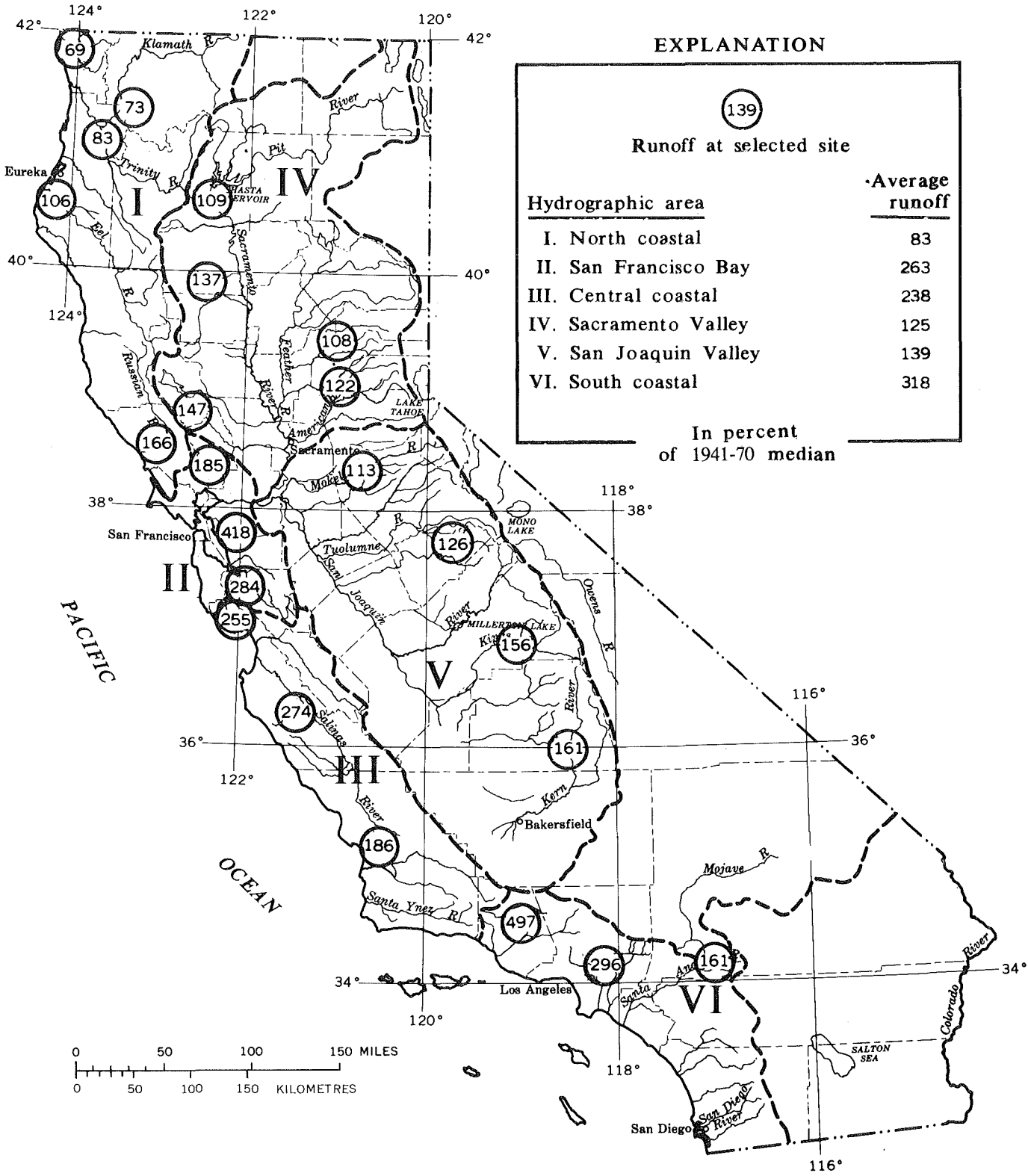

FIGURE 1.--Runoff for the current water year.

Table 1.--Factors for converting English units to International System (SI) units

The following factors may be used to convert the English units published herein to the International System of Units (SI). Subsequent reports will contain both the English and SI unit equivalents in the station manuscript descriptions until such time that all data will be published in SI units.

Multiply English units	By	To obtain SI units
	Length	
inches (in)	25.4	millimetres (mm)
	.0254	metres (m)
feet (ft)	.3048	metres (m)
yards (yd)	.9144	metres (m)
rods	5.0292	metres (m)
miles (mi)	1.609	kilometres (km)
	Area	
acres	4047	square metres (m^2)
	.4047	*hectares (ha)
	.4047	square hectometres (hm^2)
	.004047	square kilometres (km^2)
square miles (mi^2)	2.590	square kilometres (km^2)
	Volume	
gallons (gal)	3.785	**litres (l)
	3.785	cubic decimetres (dm^3)
	3.785×10^{-3}	cubic metres (m^3)
million gallons (10^6 gal)	3785	cubic metres (m^3)
	3.785×10^{-3}	cubic hectometres (hm^3)
cubic feet (ft^3)	28.32	cubic decimetres (dm^3)
	.02832	cubic metres (m^3)
cfs-days [(ft^3/s) · d]	2447	cubic metres (m^3)
	2.447×10^{-3}	cubic hectometres (hm^3)
acre-feet (acre-ft)	1233	cubic metres (m^3)
	1.233×10^{-3}	cubic hectometres (hm^3)
	1.233×10^{-6}	cubic kilometres (km^3)
	Flow	
cubic feet per second (ft^3/s)	28.32	litres per second (l/s)
	28.32	cubic decimetres per second (dm^3/s)
	.02832	cubic metres per second (m^3/s)
gallons per minute (gpm)	.06309	litres per second (l/s)
	.06309	cubic decimetres per second (dm^3/s)
	6.309×10^{-5}	cubic metres per second (m^3/s)
million gallons per day (mgd)	43.81	cubic decimetres per second (dm^3/s)
	.04381	cubic metres per second (m^3/s)
	Mass	
tons (short)	.9072	tonnes (t)

*The unit hectare is approved for use with the International System (SI) for a limited time. See NBS Special Bulletin 330, p.15, 1972 edition.

**The unit litre is accepted for use with the International System (SI). See NBS Special Bulletin 330, p.13, 1972 edition.

09423000 COLORADO RIVER BELOW DAVIS DAM, ARIZ.-NEV.

LOCATION.--Lat 35°11'30", long 114°34'17", in SE¼NE¼ sec.1, T.32 S., R.66 E., Mount Diablo meridian, in Nevada, Clark County, on right bank 0.5 mile downstream from Davis Dam, 29 miles west of Kingman, Ariz., and 68 miles downstream from Hoover Dam.

DRAINAGE AREA.--169,300 sq mi, approximately.

PERIOD OF RECORD.--June 1905 to September 1907 (published as "at Hardyville"), March 1949 to current year.

GAGE.--Water-stage recorder. Datum of gage is 500.00 ft above mean sea level; gage readings have been reduced to elevations above mean sea level. 1905-7, nonrecording gage at site 4.8 miles downstream at datum about 13.4 ft lower. Mar. 16 to May 3, 1949, water-stage recorder at site 0.5 mile downstream at present datum. May 4, 1949, to Feb. 24, 1956, water-stage recorder at site 400 ft upstream at present datum.

AVERAGE DISCHARGE (unadjusted).--24 years (1949-73), 12,690 cfs (9,194,000 acre-ft per year).

EXTREMES.--Current year: Maximum discharge, 26,500 cfs Aug. 10 (elevation, 506.00 ft); minimum daily, 1,870 cfs Feb. 22-25.
1905-7: Maximum daily discharge, 116,000 cfs June 20, 1906; minimum daily, 2,850 cfs Jan. 5, 1906.
1949 to current year: Maximum discharge, 31,200 cfs Apr. 22, 1952 (elevation, 513.91 ft); no flow at Davis Dam parts of several days July to September and Dec. 27, 1950, when gates in dam were closed; minimum daily discharge, 285 cfs Aug. 3, 1950.

REMARKS.--Records excellent. Flow regulated by Lake Mead since Feb. 1, 1935, and by Lake Mohave since Jan. 17, 1950. Many diversions upstream for irrigation, industrial, and municipal uses.

DISCHARGE, IN CUBIC FEET PER SECOND, WATER YEAR OCTOBER 1972 TO SEPTEMBER 1973

DAY	OCT	NOV	DEC	JAN	FEB	MAR	APR	MAY	JUN	JUL	AUG	SEP
1	10,600	9,000	6,120	9,990	8,880	10,600	10,400	14,700	12,400	13,200	15,300	12,200
2	11,400	9,300	7,270	7,850	10,600	11,500	14,000	16,700	13,100	17,100	14,700	12,100
3	10,100	9,120	5,250	10,200	12,000	13,400	13,200	15,000	11,900	16,300	14,200	13,200
4	9,300	9,950	9,140	10,100	7,980	7,010	15,300	16,600	12,900	16,300	13,900	14,000
5	10,400	7,660	7,100	8,210	10,700	13,800	16,200	16,300	13,000	16,000	13,100	13,800
6	3,410	9,060	5,800	9,790	10,000	15,300	17,300	11,800	12,800	15,100	15,100	13,700
7	1,900	9,550	8,480	6,760	9,810	15,800	18,200	14,300	12,000	16,500	14,900	15,200
8	1,900	7,400	9,260	7,980	7,840	17,400	11,800	14,200	12,500	11,900	14,200	14,800
9	1,920	7,440	9,990	6,900	10,200	11,100	16,200	14,300	15,000	15,100	13,100	12,400
10	1,920	10,700	5,730	8,470	7,790	8,660	18,200	13,700	12,800	14,300	17,400	14,000
11	4,840	10,900	8,330	5,630	6,790	8,510	18,400	13,800	16,800	13,700	18,100	14,600
12	3,920	7,190	8,500	7,380	6,900	6,990	18,400	13,700	13,800	13,100	13,400	13,500
13	6,740	9,930	7,910	7,300	6,730	4,680	16,200	11,600	13,400	15,100	15,400	12,400
14	3,260	8,490	8,280	6,900	5,860	4,810	18,300	14,200	14,300	17,100	15,900	14,000
15	4,860	6,940	9,290	8,550	5,840	4,830	11,300	12,200	15,000	13,200	13,300	13,300
16	4,980	5,960	9,350	7,890	5,670	8,460	18,200	12,100	15,000	17,200	15,200	12,100
17	7,020	1,990	7,000	4,320	7,150	8,880	18,400	13,500	12,100	17,400	11,500	12,700
18	3,060	1,990	7,400	4,820	6,750	7,890	15,300	15,200	11,800	17,200	15,000	12,400
19	1,990	2,960	8,150	7,800	9,600	13,200	17,200	14,900	12,000	14,200	12,400	12,600
20	1,990	2,020	7,550	7,280	12,600	12,800	18,000	11,700	14,100	16,800	15,300	12,800
21	1,990	1,990	3,990	6,940	3,520	13,000	18,100	12,400	12,100	17,300	11,100	13,600
22	2,000	2,000	5,790	10,800	1,870	15,600	12,200	9,960	13,300	13,200	9,800	13,100
23	2,000	2,000	8,750	8,190	1,870	15,300	16,100	11,600	15,200	17,200	8,680	12,700
24	2,000	2,000	4,980	7,510	1,870	15,200	16,300	11,600	13,200	16,300	10,600	11,700
25	2,000	4,230	5,910	7,470	1,870	9,650	17,800	15,000	15,300	15,900	12,600	10,500
26	6,850	2,740	7,470	7,330	7,780	13,400	13,700	15,600	15,200	17,100	11,600	8,780
27	7,150	7,230	8,550	9,310	8,410	13,200	17,800	11,700	15,300	15,000	11,900	10,400
28	7,680	8,080	10,500	6,520	11,000	11,800	17,000	12,900	14,500	15,700	13,900	12,000
29	6,940	8,020	10,100	8,790	------	16,300	11,900	11,900	15,400	13,100	13,300	12,500
30	7,730	8,190	10,000	9,380	------	14,200	14,800	12,900	17,300	17,100	13,400	10,100
31	8,050	------	8,020	9,910	------	14,300	------	11,600	------	17,800	14,200	------
TOTAL	159,900	194,030	239,960	246,270	207,880	357,570	476,200	417,660	413,500	482,500	422,480	381,180
MEAN	5,158	6,468	7,741	7,944	7,424	11,530	15,870	13,470	13,780	15,560	13,630	12,710
MAX	11,400	10,900	10,500	10,800	12,600	17,400	18,400	16,700	17,300	17,800	18,100	15,200
MIN	1,900	1,990	3,990	4,320	1,870	4,680	10,400	9,960	11,800	11,900	8,680	8,780
AC-FT	317,200	384,900	476,000	488,500	412,300	709,200	944,500	828,400	820,200	957,000	838,000	756,100

CAL YR 1972 TOTAL 4,169,170 MEAN 11,390 MAX 20,000 MIN 1,900 AC-FT 8,270,000
WTR YR 1973 TOTAL 3,999,130 MEAN 10,960 MAX 18,400 MIN 1,870 AC-FT 7,932,000

09423500 COLORADO RIVER AT NEEDLES, CALIF.

LOCATION.--Lat 34°51'06", long 114°36'33", in SE¼SE¼ sec.19, T.9 N., R.23 E., San Bernardino meridian, San Bernardino County, on right bank at Needles, 18 miles upstream from gaging station near Topock, Ariz., 31 miles downstream from Davis Dam, and 98 miles downstream from Hoover Dam.

DRAINAGE AREA.--170,600 sq mi, approximately.

PERIOD OF RECORD.--April 1931 to current year (elevations only).

GAGE.--Water-stage recorder. Datum of gage is 400.00 ft above mean sea level. Prior to May 15, 1942, at site 550 ft downstream and May 15, 1942, to Feb. 16, 1969, at site 200 ft upstream; at datum 66.23 ft higher prior to Jan. 12, 1952, and at present datum thereafter.

EXTREMES.--Current year: Maximum elevation, 469.86 ft July 17; minimum, 457.84 ft Feb. 26.
Period of record: Maximum elevation, 475.77 ft Nov. 30, 1944; minimum, 457.84 ft Feb. 26, 1973.

REMARKS.--Flow regulated by Lake Mead since Feb. 1, 1935, and by Lake Mohave since Jan. 17, 1950.

REVISIONS (WATER YEARS).--WSP 1119: 1931-47.

GAGE HEIGHT, IN FEET, WATER YEAR OCTOBER 1972 TO SEPTEMBER 1973

DAY	OCT	NOV	DEC	JAN	FEB	MAR	APR	MAY	JUN	JUL	AUG	SEP
1	64.35	62.98	62.42	62.35	62.52	63.59	65.19	66.95	65.00	66.14	67.09	65.37
2	64.51	63.25	62.07	62.92	62.54	64.10	64.85	66.04	65.52	66.48	66.18	64.91
3	64.51	63.12	61.95	63.00	63.28	64.71	66.09	65.74	64.98	67.35	66.30	65.18
4	63.79	63.88	62.44	63.67	62.98	64.12	66.00	65.82	65.06	66.61	65.70	65.65
5	63.99	63.23	62.47	63.49	62.45	63.68	66.72	65.70	65.56	66.99	65.56	65.64
6	63.14	62.91	61.91	63.23	63.10	65.46	67.69	64.89	65.31	66.66	65.61	65.63
7	59.65	63.59	61.86	62.98	62.86	66.48	67.91	65.72	65.08	66.62	66.17	65.84
8	59.34	62.86	63.11	62.62	62.30	67.03	65.74	65.39	64.52	65.83	65.94	65.98
9	59.24	62.82	63.51	62.37	62.13	65.85	66.36	64.49	66.23	65.79	65.83	65.90
10	59.17	62.93	62.73	62.21	62.31	63.03	67.87	66.02	65.62	66.05	66.17	65.27
11	59.96	64.50	61.77	62.50	61.46	63.01	67.95	65.93	65.84	65.85	67.92	65.83
12	60.94	63.42	62.60	61.63	60.98	63.40	68.10	65.59	66.67	65.43	66.44	66.14
13	60.90	62.88	62.49	62.23	61.49	61.29	67.30	65.08	65.16	66.06	65.68	65.32
14	61.51	63.44	62.30	62.12	60.45	60.98	67.64	--	65.80	67.09	66.55	65.35
15	60.53	62.75	62.75	62.16	60.49	60.96	65.79	--	66.17	66.14	66.24	65.63
16	61.12	62.33	62.99	62.93	60.44	61.35	67.07	--	66.15	66.29	65.73	65.30
17	61.26	60.90	62.66	61.88	60.71	63.01	68.07	--	65.60	67.91	65.81	65.11
18	61.87	59.31	61.80	60.65	61.01	62.89	66.68	--	64.69	67.14	65.01	65.15
19	59.30	59.47	62.99	61.18	61.56	63.31	67.46	--	64.55	66.50	65.63	64.94
20	59.10	59.59	61.49	62.89	62.69	65.03	67.74	--	65.57	66.74	65.58	65.12
21	59.06	59.12	61.49	61.69	62.78	65.14	67.86	--	65.23	67.31	65.61	65.43
22	59.05	59.12	60.30	62.45	58.53	65.86	66.06	--	65.31	66.34	64.39	65.57
23	59.03	59.09	61.47	62.85	58.02	66.37	66.15	--	66.37	66.48	63.73	65.09
24	59.03	59.07	62.30	62.10	57.94	66.36	67.29	--	65.46	66.97	63.32	65.12
25	59.01	59.09	60.66	61.83	57.89	64.80	67.59	--	66.24	66.92	64.25	64.76
26	59.80	60.51	61.49	62.11	58.18	64.51	66.35	--	66.09	67.20	65.15	63.92
27	62.29	60.54	61.99	62.05	61.52	65.55	67.22	--	66.44	66.46	64.76	63.48
28	62.24	62.68	63.00	61.99	62.08	65.33	67.52	--	66.04	66.54	65.14	64.45
29	62.44	62.68	62.91	61.65	------	65.93	65.33	--	66.34	65.67	65.51	65.58
30	62.10	62.85	63.37	62.35	------	66.62	65.99	--	67.03	66.50	65.60	64.72
31	62.66	------	62.53	62.43	------	65.94	------	--	------	67.75	65.59	------
MEAN	61.13	61.83	62.25	62.34	61.24	64.38	66.85	--	65.65	66.57	65.62	65.25
MAX	64.51	64.50	63.51	63.67	63.28	67.03	68.10	--	67.03	67.91	67.92	66.14
MIN	59.01	59.07	60.30	60.65	57.89	60.96	64.85	--	64.52	65.43	63.32	63.48

09424000 COLORADO RIVER NEAR TOPOCK, ARIZ.

LOCATION.--Lat 34°41'15", long 114°27'43", in SW¼NW¼ sec.13, T.15 N., R.21 W., Gila and Salt River meridian, Mohave County, on left bank in Mohave Canyon, 2.7 miles downstream from Topock, 39.5 miles upstream from Parker Dam, and 49 miles downstream from Davis Dam.

DRAINAGE AREA.--172,300 sq mi, approximately.

PERIOD OF RECORD.--January 1917 to current year. Daily mean elevations published since October 1938.

GAGE.--Water-stage recorder. Datum of gage is 423.02 ft above mean sea level; gage readings have been reduced to elevations above mean sea level. Prior to Dec. 3, 1922, at site about 1 mile upstream at different datum.

AVERAGE DISCHARGE.--17 years (1917-34), 20,260 cfs (14,670,000 acre-ft per year); 39 years (1934-73), 13,020 cfs (9,433,000 acre-ft per year), unadjusted.

EXTREMES.--Current year: Maximum discharge, 18,000 cfs Aug. 12 (elevation, 455.60 ft); minimum daily, 2,210 cfs Nov. 22-25; minimum elevation, 448.54 ft for part or all of Oct. 24-26, Nov. 21-26, Feb. 23-27.
1917-34: Maximum discharge probably exceeded 200,000 cfs June 22, 1921; minimum, 1,480 cfs Aug. 17, 1934.
1934 to current year: Maximum discharge, 35,700 cfs Jan. 29, 1942; maximum elevation, 457.37 ft July 9, 1959; minimum discharge, 375 cfs Feb. 14, 1935; minimum daily, 422 cfs Feb. 14, 1935.
Discharge of about 300,000 cfs (based on determination at Lees Ferry gaging station) occurred about July 10, 1884. Discharge in excess of 400,000 cfs (estimated) probably occurred within the period 1857-68 and most likely in 1862.

REMARKS.--Records excellent. Many diversions above station for irrigation, municipal, and industrial uses. Flow regulated by Lake Mead since Feb. 1, 1935, and by Lake Mohave since Jan. 17, 1950.

REVISIONS (WATER YEARS).--WSP 918: 1921. WSP 1313: 1918-19(M).

DISCHARGE, IN CUBIC FEET PER SECOND, WATER YEAR OCTOBER 1972 TO SEPTEMBER 1973

DAY	OCT	NOV	DEC	JAN	FEB	MAR	APR	MAY	JUN	JUL	AUG	SEP
1	10,100	7,600	7,070	6,980	8,920	9,100	12,500	13,800	12,100	14,800	15,800	13,100
2	10,100	8,250	5,650	8,380	8,420	9,400	10,400	14,400	12,800	13,100	14,300	11,900
3	10,600	8,350	6,340	7,180	9,800	10,200	12,700	15,000	12,700	16,300	13,600	11,900
4	9,770	8,580	5,760	9,020	10,600	11,200	12,900	15,000	12,300	15,100	13,400	12,700
5	9,090	8,940	7,190	9,070	8,140	7,470	14,000	15,500	12,900	15,100	13,200	13,100
6	9,680	7,330	6,350	7,930	9,870	11,700	15,300	14,500	12,900	14,900	12,900	12,900
7	4,390	8,330	5,430	8,760	9,510	13,400	16,400	13,200	12,700	14,700	13,900	13,000
8	3,120	8,430	7,320	6,860	9,130	14,500	15,100	14,100	12,000	14,900	13,800	13,800
9	2,940	7,240	8,160	7,370	7,850	14,300	12,800	14,200	12,800	12,700	13,600	13,700
10	2,690	7,120	8,450	6,630	9,220	10,000	15,500	14,200	13,700	13,900	13,600	11,900
11	2,740	9,680	5,470	7,720	7,660	8,380	16,800	14,100	12,700	13,700	16,000	12,900
12	4,570	9,590	7,150	5,810	6,710	8,430	17,300	14,100	14,900	13,200	15,500	13,700
13	4,230	7,010	7,310	6,880	6,710	6,420	16,800	13,600	12,700	13,300	13,000	12,500
14	6,040	8,790	6,950	6,970	6,370	4,910	16,000	13,100	13,000	14,700	14,100	12,000
15	4,130	7,830	7,290	6,710	5,590	4,870	15,300	13,900	13,400	14,900	14,300	12,900
16	4,990	6,750	8,030	8,020	5,540	4,930	13,500	12,500	14,000	13,200	13,000	12,600
17	5,100	6,230	8,060	7,600	5,460	7,660	16,600	13,600	14,000	15,900	13,800	11,800
18	6,590	2,770	6,430	4,890	6,480	7,910	15,900	13,800	12,200	15,900	11,900	12,000
19	3,760	2,450	7,240	4,890	6,340	7,660	15,200	14,800	11,600	15,300	13,500	11,600
20	2,820	2,730	6,510	7,060	8,530	11,000	16,100	14,000	12,000	14,000	12,700	12,000
21	2,610	2,230	6,370	6,900	10,700	11,400	16,600	12,600	13,200	15,400	13,700	12,200
22	2,550	2,210	4,030	6,750	4,360	12,200	15,300	12,600	12,400	15,100	11,500	12,600
23	2,480	2,210	5,100	9,130	2,560	13,700	13,000	11,200	13,300	13,500	10,500	12,100
24	2,410	2,210	7,270	7,800	2,450	13,700	14,900	11,700	13,600	15,200	9,480	11,900
25	2,350	2,210	4,680	7,150	2,450	12,700	15,600	12,500	12,900	15,000	10,800	11,000
26	2,530	3,370	5,100	7,250	2,440	9,950	14,900	14,300	13,800	15,200	12,100	9,900
27	5,810	2,880	6,400	7,070	6,180	12,200	14,600	13,300	14,100	15,100	11,600	8,630
28	6,670	5,910	7,480	8,280	7,530	12,300	16,100	11,900	14,000	14,300	11,900	9,870
29	7,020	6,770	8,600	6,530	------	12,300	14,500	12,300	13,900	14,200	13,000	11,800
30	6,450	6,980	8,700	7,960	------	14,100	12,900	12,200	14,900	13,400	12,900	11,300
31	7,090	------	8,560	8,630	------	13,400	------	12,400	------	15,800	12,800	------
TOTAL	165,420	180,980	210,450	228,180	195,520	321,390	445,500	418,400	393,500	451,800	406,180	363,300
MEAN	5,336	6,033	6,789	7,361	6,983	10,370	14,850	13,500	13,120	14,570	13,100	12,110
MAX	10,600	9,680	8,700	9,130	10,700	14,500	17,300	15,500	14,900	16,300	16,000	13,800
MIN	2,350	2,210	4,030	4,890	2,440	4,870	10,400	11,200	11,600	12,700	9,480	8,630
AC-FT	328,100	359,000	417,400	452,600	387,800	637,500	883,600	829,900	780,500	896,100	805,700	720,600

CAL YR 1972 TOTAL 3,901,520 MEAN 10,660 MAX 17,200 MIN 2,210 AC-FT 7,739,000
WTR YR 1973 TOTAL 3,780,620 MEAN 10,360 MAX 17,300 MIN 2,210 AC-FT 7,499,000

09424000 COLORADO RIVER NEAR TOPOCK, ARIZ.--Continued

MEAN ELEVATION, IN FEET, WATER YEAR OCTOBER 1972 TO SEPTEMBER 1973

DAY	OCT	NOV	DEC	JAN	FEB	MAR	APR	MAY	JUN	JUL	AUG	SEP
1	52.60	51.43	51.33	51.29	51.94	52.10	53.36	54.11	53.68	54.57	54.83	53.60
2	52.60	51.72	50.63	51.90	51.74	52.15	52.60	54.32	53.97	53.98	54.33	53.17
3	52.78	51.76	50.98	51.39	52.28	52.44	53.44	54.55	53.93	55.05	54.08	53.16
4	52.46	51.87	50.68	51.96	52.56	52.84	53.51	54.54	53.77	54.63	54.01	53.44
5	52.20	52.02	51.39	51.99	51.61	51.35	53.89	54.71	53.98	54.62	53.94	53.59
6	52.41	51.35	50.98	51.53	52.30	53.03	54.34	54.35	54.00	54.54	53.85	53.52
7	49.92	51.80	50.51	51.86	52.17	53.65	54.74	53.90	53.93	54.45	54.17	53.56
8	49.17	51.83	51.44	51.04	52.01	54.02	54.27	54.22	53.65	54.52	54.16	53.86
9	49.05	51.34	51.82	51.27	51.49	53.97	53.48	54.25	53.96	53.74	54.08	53.80
10	48.87	51.30	51.92	50.92	52.05	52.37	54.41	54.25	54.28	54.19	54.08	53.19
11	48.89	52.38	50.53	51.42	51.41	51.75	54.88	54.22	53.92	54.11	54.91	53.55
12	50.01	52.34	51.36	50.52	50.96	51.78	55.03	54.22	54.70	53.94	54.74	53.83
13	49.83	51.28	51.43	51.05	50.96	50.85	54.86	54.06	53.92	53.97	53.87	53.38
14	50.76	52.05	51.27	51.08	50.79	50.08	54.61	53.86	54.03	54.45	54.26	53.20
15	49.76	51.66	51.43	50.96	50.40	50.06	54.34	54.14	54.19	54.54	54.31	53.54
16	50.21	51.18	51.76	51.55	50.37	50.09	53.75	53.65	54.38	53.92	53.88	53.42
17	50.27	50.90	51.77	51.37	50.33	51.44	54.83	54.03	54.39	54.90	54.12	53.15
18	51.02	48.96	51.02	50.03	50.85	51.57	54.60	54.12	53.72	54.89	53.45	53.24
19	49.50	48.73	51.41	50.03	50.79	51.46	54.39	54.48	53.50	54.66	53.99	53.12
20	48.91	48.94	51.05	51.13	51.78	52.79	54.71	54.21	53.67	54.24	53.67	53.25
21	48.76	48.56	50.99	51.05	52.64	52.94	54.91	53.74	54.11	54.72	54.02	53.33
22	48.71	48.54	49.76	50.98	49.71	53.22	54.49	53.73	53.82	54.59	53.19	53.51
23	48.65	48.54	50.34	52.01	48.62	53.77	53.70	53.24	54.12	54.06	52.80	53.33
24	48.58	48.54	51.42	51.46	48.54	53.77	54.39	53.46	54.23	54.64	52.40	53.26
25	48.54	48.54	50.12	51.17	48.54	53.41	54.62	53.74	54.01	54.58	52.87	52.97
26	48.66	49.33	50.34	51.22	48.54	52.41	54.41	54.43	54.28	54.65	53.35	52.55
27	50.58	49.02	51.01	51.13	50.68	53.22	54.33	54.05	54.37	54.60	53.13	52.06
28	51.01	50.75	51.52	51.65	51.37	53.27	54.87	53.59	54.31	54.33	53.22	52.58
29	51.18	51.19	51.99	50.88	------	53.27	54.32	53.72	54.29	54.28	53.59	53.29
30	50.89	51.29	52.04	51.53	------	53.94	53.78	53.69	54.62	54.00	53.53	53.12
31	51.20	------	51.97	51.81	------	53.67	------	53.81	------	54.86	53.50	------
MEAN	50.26	50.64	51.17	51.26	50.98	52.47	54.26	54.04	54.06	54.43	53.82	53.29
MAX	52.78	52.38	52.04	52.01	52.64	54.02	55.03	54.71	54.70	55.05	54.91	53.86
MIN	48.54	48.54	49.76	50.03	48.54	50.06	52.60	53.24	53.50	53.74	52.40	52.06

WTR YR 1973 MEAN 52.56 MAX 55.05 MIN 48.54

NOTE.--Add 400.00 ft to obtain elevation above mean sea level.

09424150. Colorado River aqueduct near Parker Dam, Ariz.-Calif.

LOCATION.--Lat 34°18'58", long 114°09'23", in NW¼SW¼ sec.28, T.3 N., R.27 E., San Bernardino meridian, in California, San Bernardino County, at intake pumping plant of Metropolitan Water District of Southern California on Lake Havasu, 1.8 mi (2.9 km) upstream from Parker Dam and 154 mi (248 km) downstream from Hoover Dam.

PERIOD OF RECORD.--January 1939 to current year (monthly diversions only since October 1942). Published as a supplement to records for Colorado River below Parker Dam, 1942-50.

GAGE.--Venturi meters in pressure lines at intake pumping plant. Water-stage recorders with weirs on 4 percolation returns; prior to October 1964 miscellaneous measurements only (discontinued).

AVERAGE DISCHARGE.--34 years, 824 ft^3/s (23.34 m^3/s), 597,000 acre-ft/yr (736,000 m^3/yr).

EXTREMES.--Period of record: Maximum daily diversion, 3,986 acre-ft (4.91 hm^3), 2,010 ft^3/s (56.9 m^3/s) Oct. 25, 1970; no diversion at times.

REMARKS.--Pumping began Jan. 7, 1939. Figures of monthly diversion shown represent water pumped from Lake Havasu less return surface flow from Gene and Copper Basin Reservoirs. No water returned as surface flow from these reservoirs this year. Percolation return flow from Gene and Copper Basin Reservoirs was measured in 4 washes between pumping plant and Copper Basin Wash, each about 1 mile from the Colorado River. Infrequent storm runoff registered with percolation flow has not been deducted and is considered negligible. The percolation return flow is not subtracted from the diversion record. The records for these percolation return flows are discontinued. Estimates of percolation of 14 acre-ft/day (17,300 m^3/day) are used for accounting purposes.

COOPERATION.--Diversion records furnished by Metropolitan Water District of Southern California.

MONTHLY DIVERSIONS AND PERCOLATION RETURN FLOW, IN ACRE-FEET, WATER YEAR OCTOBER 1972 TO SEPTEMBER 1973

Month	Total percolation	Diversions			
		Maximum	Minimum	Mean	Total
October	355	3,770	3,326	3,497	108,418
November	319	3,653	2,266	3,266	97,993
December	327	3,561	0	1,984	61,499
CAL YR 1972	4,055	3,930	0	3,347	1,225,017
January	322	3,706	3,197	3,469	107,544
February	291	3,729	1,592	2,402	67,258
March	392	2,143	1,737	1,868	57,922
April	323	3,531	1,864	3,135	94,058
May	306	3,548	3,386	3,490	108,179
June	257	3,625	3,379	3,495	104,851
July	321	3,740	3,371	3,495	108,332
August	317	3,540	3,362	3,473	107,672
September	274	3,654	3,379	3,482	104,473
WTR YR 1973	3,804	3,770	0	3,091	1,128,199

09427500 LAKE HAVASU NEAR PARKER DAM, ARIZ.-CALIF.

LOCATION.--Lat 34°18'58", long 114°09'23", in NW¼SW¼ sec.28, T.3 N., R.27 E., San Bernardino meridian, in California, San Bernardino County, at intake pumping plant for Colorado River aqueduct of Metropolitan Water District of Southern California, 1.8 miles upstream from Parker Dam on Colorado River, and 154 miles downstream from Hoover Dam.

DRAINAGE AREA.--178,800 sq mi, approximately.

PERIOD OF RECORD.--July 1938 to current year. Published as Parker Reservoir near Parker Dam, 1938.

GAGE.--Water-stage recorder. Datum of gage is 400.54 ft above mean sea level. Gage readings have been reduced to elevations above mean sea level.

EXTREMES.--Current year: Maximum contents, 622,000 acre-ft June 19 (elevation, 450.67 ft); minimum, 531,500 acre-ft Mar. 6 (elevation, 445.92 ft).
Period of record: Maximum contents, 693,000 acre-ft (by temporary use of flashboards) Apr. 18, 1943, June 4, 1953; maximum elevation, 450.77 ft June 26, 1958; minimum contents, 71,400 acre-ft June 25, 1942 (elevation, 412.09 ft).

REMARKS.--Lake is formed by concrete-arch dam; dam was completed and storage began July 1, 1938. Usable capacity (based on April 1957 re-survey by Bureau of Reclamation between elevations 430.54 and 450.54 ft) 619,400 acre-ft between elevations 400.54 (sill of regulating gates) and 450.54 ft (top of regulating gates). Prior to Oct. 1, 1956, different capacity table used. Dead storage, 28,600 acre-ft below elevation 400.54 ft (based on original survey). About 0.07 ft fall indicated between gage and Parker Dam under normal operating conditions. Drawdown below elevation 440.54 ft not legally permissible except by consent of the Metropolitan Water District of Southern California or in an emergency affecting the safety of the dam. Lake is used for flood control, power development, re-regulation of river for irrigation demand, and as a basin from which water is pumped by Metropolitan Water District of Southern California to Colorado River aqueduct. Figures given herein represent usable contents. For record of diversion to Colorado River aqueduct and return flow, see record for Colorado River aqueduct near Parker Dam (sta 09424150).

CONTENTS, IN ACRE-FEET, AT 2400, WATER YEAR OCTOBER 1972 TO SEPTEMBER 1973

DAY	OCT	NOV	DEC	JAN	FEB	MAR	APR	MAY	JUN	JUL	AUG	SEP
1	559,800	540,900	535,300	537,300	546,300	541,600	568,800	597,800	609,800	605,800	601,400	575,400
2	559,000	542,900	535,500	535,700	545,200	540,900	564,500	599,800	611,200	602,600	601,800	573,400
3	560,200	542,700	537,300	532,300	545,200	540,000	560,000	605,200	611,200	604,200	603,000	569,400
4	561,800	542,500	537,800	537,300	547,700	542,700	560,300	605,400	611,400	606,000	603,400	567,600
5	563,500	544,000	538,700	539,500	545,600	533,700	560,700	609,600	613,400	607,400	602,800	567,500
6	573,900	542,200	537,500	538,200	547,700	531,700	561,500	612,000	614,600	609,000	600,400	568,600
7	575,400	542,300	535,100	539,100	550,300	535,500	564,400	609,200	613,400	608,600	602,000	568,000
8	573,500	546,100	535,100	538,600	551,300	543,400	564,400	610,200	609,600	610,000	602,800	569,000
9	568,800	547,400	539,300	541,600	547,400	555,000	560,200	612,600	606,400	605,400	604,200	570,500
10	565,200	543,200	539,500	542,700	545,900	557,700	562,000	615,200	605,800	604,200	600,800	568,000
11	562,200	546,100	535,900	546,700	547,200	559,600	567,800	613,800	604,200	605,400	600,200	566,900
12	563,300	548,600	536,600	544,500	548,100	565,800	574,300	613,600	608,600	605,000	601,600	569,400
13	564,600	546,500	538,900	544,900	549,500	569,600	574,700	611,800	607,600	602,800	599,000	572,000
14	568,600	551,500	538,000	545,600	551,700	570,700	577,000	609,400	607,800	601,200	599,400	571,100
15	566,700	555,000	538,900	545,800	554,400	568,200	578,100	609,400	610,400	601,000	601,400	572,000
16	564,800	560,700	541,600	549,900	554,800	562,500	574,300	606,400	613,800	596,000	598,800	572,400
17	562,900	566,700	543,800	553,900	549,900	561,600	580,000	607,800	617,400	597,400	603,400	570,500
18	568,600	562,900	543,100	551,500	546,700	561,500	583,200	607,400	617,400	602,200	597,800	569,600
19	568,600	558,400	544,500	547,200	540,500	557,500	586,100	609,000	615,400	604,400	596,400	568,600
20	566,700	557,700	546,700	546,500	543,800	558,600	587,600	609,800	613,400	599,600	594,800	569,400
21	564,800	556,000	548,600	545,400	559,200	558,800	591,400	607,400	615,600	599,400	599,600	567,800
22	563,500	555,400	549,400	537,500	563,800	562,900	591,800	607,600	611,200	599,800	599,200	568,200
23	561,800	551,700	548,100	540,700	559,800	565,000	587,000	604,800	606,800	597,400	596,400	569,200
24	559,200	548,500	551,200	543,800	555,400	566,700	588,600	603,800	605,600	600,000	589,700	569,700
25	554,800	545,400	546,700	545,800	548,800	568,200	593,400	600,200	603,200	601,400	584,400	570,500
26	549,500	541,100	540,400	545,600	541,100	565,800	600,400	603,800	605,400	604,000	582,300	568,600
27	547,700	535,500	536,000	543,600	538,900	564,400	600,200	607,000	607,800	604,400	578,100	564,400
28	546,700	532,600	534,200	544,700	537,700	561,500	603,400	607,200	610,600	600,000	575,200	561,600
29	548,100	532,800	535,000	542,200	------	559,600	601,400	609,000	607,800	597,800	574,300	561,600
30	547,600	533,700	535,300	540,900	------	563,300	599,400	608,000	605,800	594,000	573,500	562,000
31	542,000	------	540,400	542,200	------	565,000	------	609,400	------	595,400	573,700	------
MAX	575,400	566,700	551,200	553,900	563,800	570,700	603,400	615,200	617,400	610,000	604,200	575,400
MIN	542,000	532,600	534,200	532,300	537,700	531,700	560,000	597,800	603,200	594,000	573,500	561,600
(a)	-21,800	-8,300	+6,700	+1,800	-4,500	+27,300	+34,400	+10,000	-3,600	-10,400	-21,700	-11,700

CAL YR 1972 MAX 621,600 MIN 532,600 a -1,400
WTR YR 1973 MAX 617,400 MIN 531,700 a -1,800

a Change in contents, in acre-feet.

09427500 LAKE HAVASU NEAR PARKER DAM, ARIZ.-CALIF.--Continued

ELEVATION, IN FEET, AT 2400, WATER YEAR OCTOBER 1972 TO SEPTEMBER 1973

DAY	OCT	NOV	DEC	JAN	FEB	MAR	APR	MAY	JUN	JUL	AUG	SEP
1	447.47	446.44	446.13	446.24	446.74	446.48	447.95	449.46	450.06	449.86	449.64	448.30
2	447.43	446.55	446.14	446.15	446.68	446.44	447.56	449.56	450.13	449.70	449.66	448.19
3	447.49	446.54	446.24	445.96	446.68	446.39	447.48	449.83	450.13	449.78	449.72	447.98
4	447.58	446.53	446.27	446.24	446.82	446.54	447.50	449.84	450.14	449.87	449.74	447.89
5	447.67	446.61	446.32	446.36	446.70	446.04	447.52	450.05	450.24	449.94	449.71	447.88
6	448.22	446.51	446.25	446.29	446.82	445.93	447.56	450.17	450.30	450.02	449.59	447.94
7	448.30	446.52	446.12	446.34	446.96	446.14	447.72	450.03	450.24	450.00	449.67	447.91
8	448.20	446.73	446.12	446.31	447.02	446.58	447.72	450.08	450.05	450.07	449.71	447.96
9	447.95	446.80	446.35	446.48	446.80	447.22	447.49	450.20	449.89	449.84	449.78	448.04
10	447.76	446.57	446.36	446.54	446.72	447.36	447.59	450.33	449.86	449.78	449.61	447.91
11	447.60	446.73	446.16	446.76	446.79	447.46	447.90	450.26	449.78	449.84	449.58	447.85
12	447.66	446.87	446.20	446.64	446.84	447.79	448.24	450.25	450.00	449.82	449.65	447.98
13	447.73	446.75	446.33	446.66	446.92	447.99	448.26	450.16	449.95	449.67	449.52	448.12
14	447.94	447.03	446.28	446.70	447.04	448.05	448.38	450.04	449.96	449.63	449.54	448.07
15	447.84	447.22	446.33	446.71	447.19	447.92	448.44	450.04	450.09	449.62	449.64	448.12
16	447.74	447.52	446.48	446.94	447.21	447.62	448.24	449.89	450.26	449.37	449.51	448.14
17	447.64	447.84	446.60	447.16	446.94	447.57	448.54	449.96	450.44	449.44	449.74	448.04
18	447.94	447.64	446.56	447.03	446.76	447.56	448.71	449.94	450.44	449.68	449.46	447.99
19	447.94	447.40	446.64	446.79	446.42	447.35	448.86	450.02	450.34	449.79	449.39	447.94
20	447.84	447.36	446.76	446.75	446.60	447.41	448.94	450.06	450.24	449.55	449.31	447.98
21	447.74	447.27	446.87	446.69	447.44	447.42	449.14	449.94	450.35	449.54	449.55	447.90
22	447.67	447.24	446.91	446.25	447.69	447.64	449.16	449.95	450.13	449.56	449.53	447.92
23	447.58	447.04	446.84	446.43	447.47	447.75	448.91	449.81	449.91	449.44	449.39	447.97
24	447.44	446.86	447.01	446.60	447.24	447.84	448.99	449.76	449.85	449.57	449.05	448.00
25	447.21	446.69	446.76	446.71	446.88	447.92	449.24	449.58	449.73	449.64	448.77	448.04
26	446.92	446.45	446.41	446.70	446.45	447.79	449.59	449.76	449.84	449.77	448.66	447.94
27	446.82	446.14	446.17	446.59	446.33	447.72	449.58	449.92	449.96	449.79	448.44	447.72
28	446.76	445.98	446.07	446.65	446.26	447.56	449.74	449.93	450.10	449.57	448.29	447.57
29	446.84	445.99	446.11	446.51	------	447.46	449.64	450.02	449.96	449.46	448.24	447.57
30	446.81	446.04	446.13	446.44	------	447.66	449.54	449.97	449.86	449.27	448.20	447.59
31	446.50	------	446.41	446.51	------	447.75	------	450.04	------	449.34	448.21	------
MEAN	447.56	446.80	446.40	446.55	446.87	447.30	448.47	449.96	450.07	449.68	449.31	447.95
MAX	448.30	447.84	447.01	447.16	447.69	448.05	449.74	450.33	450.44	450.07	449.78	448.30
MIN	446.50	445.98	446.07	445.96	446.26	445.93	447.48	449.46	449.73	449.27	448.20	447.57

CAL YR 1972.....MAX 450.65 MIN 445.98
WTR YR 1973.....MAX 450.44 MIN 445.93

09427520 COLORADO RIVER BELOW PARKER DAM, ARIZ.-CALIF.

LOCATION.--Lat 34°17'44", long 114°08'22", in NW¼NW¼ sec.3, T.2 N., R.27 E., San Bernardino meridian, in California, San Bernardino County, on north end of powerplant at Parker Dam, 13 miles northeast of Parker, Ariz., and 14 miles upstream from Headgate Rock Dam.

DRAINAGE AREA.--178,800 sq mi, approximately.

PERIOD OF RECORD.--February to September 1934 (gage heights and fragmentary discharge records), October 1934 to current year. Prior to October 1937, published as "near Parker, Ariz."

GAGE.--Water-stage recorder. Datum of gage is 300.54 ft above mean sea level. Prior to Oct. 1, 1967, water-stage recorder at site 3.8 miles downstream at datum 346.23 ft above mean sea level.

AVERAGE DISCHARGE (unadjusted).--39 years, 12,250 cfs (8,875,000 acre-ft per year).

EXTREMES.--Current year: Maximum discharge, 19,300 cfs Sept. 14 (gage height, 72.08 ft); minimum daily, 1,510 cfs Oct. 8.

Period of record: Maximum discharge, 42,400 cfs Feb. 8, 1937; no flow at Parker Dam for parts of several days in 1942 when gates in dam were closed; minimum daily discharge, 1,440 cfs Feb. 15, 1935.

An unregulated discharge of probably less than 1,350 cfs occurred Aug. 18, 1934 (lowest unregulated discharge since 1917 and probably since a much earlier date).

REMARKS.--Records excellent except those below 2,000 cfs, which are good. Flow regulated by Lake Mead since Feb. 1, 1935, Lake Mohave since Jan. 17, 1950, and by Lake Havasu since July 1, 1938. Many diversions above station. For record of diversion to Colorado River aqueduct and return flows, see record for Colorado River aqueduct near Parker Dam (sta 09424150). Records of chemical analyses and water temperatures for the current year are published in Part 2 of this report.

REVISIONS (WATER YEARS).--WSP 1313: 1941(M).

DISCHARGE, IN CUBIC FEET PER SECOND, WATER YEAR OCTOBER 1972 TO SEPTEMBER 1973

DAY	OCT	NOV	DEC	JAN	FEB	MAR	APR	MAY	JUN	JUL	AUG	SEP
1	10,200	6,250	5,930	6,860	5,060	7,250	12,200	12,500	10,400	14,200	13,000	10,800
2	9,360	5,620	5,760	7,660	7,450	9,790	13,500	12,100	9,510	13,900	12,200	11,500
3	7,590	6,730	5,790	7,240	7,800	9,890	13,400	11,300	10,300	13,300	12,200	11,700
4	7,510	6,800	7,050	5,380	7,920	9,890	13,000	12,400	10,200	13,000	12,200	11,700
5	6,470	6,810	6,820	6,810	7,920	11,300	13,500	12,500	9,590	12,900	12,100	11,500
6	3,660	6,790	7,350	6,890	7,210	11,500	14,800	12,100	9,970	12,700	12,000	10,700
7	1,590	6,400	7,490	6,860	6,950	11,400	15,300	12,100	11,000	13,700	12,000	11,500
8	1,510	5,270	7,410	5,520	6,910	10,200	14,900	11,700	11,600	13,200	11,900	11,600
9	2,530	5,010	7,110	4,490	8,150	8,640	14,900	11,100	11,600	13,100	11,300	11,900
10	2,300	7,560	7,790	4,700	8,720	9,600	13,700	10,700	12,300	12,500	13,200	12,100
11	1,850	6,970	7,110	4,030	6,090	9,530	12,900	12,400	11,800	11,800	15,200	12,100
12	1,670	6,880	7,180	5,430	5,290	5,650	12,500	12,100	11,600	11,600	13,800	10,800
13	1,650	6,820	6,670	5,140	5,520	5,840	14,500	12,500	11,100	12,900	13,500	10,200
14	1,700	5,110	6,400	5,160	5,380	5,290	14,600	11,900	11,000	13,800	12,400	11,100
15	2,890	4,680	6,610	5,210	4,370	6,030	13,900	11,800	10,700	13,800	12,200	10,800
16	3,430	3,500	6,210	3,650	5,670	7,780	13,800	11,600	10,400	14,200	12,100	10,800
17	4,090	1,930	6,200	4,420	7,010	8,520	13,000	10,800	10,600	13,800	11,500	10,900
18	2,220	2,880	6,050	4,430	7,640	9,690	13,100	12,200	10,600	13,200	12,200	11,200
19	1,640	2,880	5,450	5,420	8,780	10,900	12,700	12,100	10,200	13,000	12,600	10,500
20	1,650	2,200	4,780	5,380	6,060	11,700	13,400	12,000	10,600	14,700	11,700	9,690
21	1,670	1,920	4,150	5,610	3,480	12,000	13,700	11,200	10,100	15,000	9,920	11,400
22	1,670	1,900	2,430	9,170	2,010	12,100	14,200	10,300	12,500	14,000	9,700	10,900
23	1,680	1,890	4,530	5,840	3,790	13,700	14,000	10,200	13,300	13,500	9,360	10,600
24	1,670	2,310	4,630	4,910	4,250	14,000	12,800	9,600	13,200	13,200	10,200	10,300
25	2,070	2,280	5,690	4,630	5,550	13,900	11,700	11,500	12,700	13,300	10,400	9,610
26	2,550	4,090	6,850	5,920	5,760	13,300	11,100	11,200	11,700	12,700	11,100	9,270
27	4,890	5,080	7,090	6,520	6,510	13,200	13,100	11,000	11,900	13,900	11,600	8,930
28	4,890	5,150	6,830	6,160	8,010	13,900	12,900	9,840	11,000	14,600	11,300	9,980
29	4,530	5,610	7,800	6,260	------	12,700	13,400	9,480	13,400	14,600	11,600	10,300
30	5,460	5,230	8,240	6,900	------	11,800	12,700	9,910	14,400	14,200	10,800	10,300
31	6,190	------	6,630	6,520	------	12,500	------	8,950	------	13,700	10,800	------
TOTAL	112,780	142,550	196,030	179,120	175,260	323,490	403,200	351,080	339,270	418,000	366,080	324,680
MEAN	3,638	4,752	6,324	5,778	6,259	10,440	13,440	11,330	11,310	13,480	11,810	10,820
MAX	10,200	7,560	8,240	9,170	8,780	14,000	15,300	12,500	14,400	15,000	15,200	12,100
MIN	1,510	1,890	2,430	3,650	2,010	5,290	11,100	8,950	9,510	11,600	9,360	8,930
AC-FT	223,700	282,700	388,800	355,300	347,600	641,600	799,700	696,400	672,900	829,100	726,100	644,000

CAL YR 1972 TOTAL 3,422,350 MEAN 9,351 MAX 15,600 MIN 1,510 AC-FT 6,788,000
WTR YR 1973 TOTAL 3,331,540 MEAN 9,128 MAX 15,300 MIN 1,510 AC-FT 6,608,000

09429000 PALO VERDE CANAL NEAR BLYTHE, CALIF.

LOCATION.--Lat 33°43'55", long 114°30'40", in NW¼NE¼ sec.19, T.5 S., R.24 E., San Bernardino meridian, Riverside County, at canal intake structure on west side of Palo Verde Diversion Dam, 10 miles northeast of Blythe, and 44 miles downstream from Headgate Rock Dam.

PERIOD OF RECORD.--January 1922 to December 1923, January 1925 to current year (prior to October 1950, monthly discharge only).

GAGE.--Recording gages above and below intakes to record head. Since May 18, 1964, recorder to show gate openings. Datum of gage is: Forebay gage, at mean sea level; tailrace gage, 274.13 ft above mean sea level. Aug. 7, 1950, to Nov. 30, 1952, water-stage recorder on tailrace and auxiliary recorder 0.5 mile downstream and Dec. 1, 1952, to Oct. 28, 1957, recording gage above and below former intake structure 0.2 mile upstream, at different datums.

AVERAGE DISCHARGE.--23 years (1950-73), 1,196 cfs (886,500 acre-ft per year).

EXTREMES.--1950 to current year: Maximum daily discharge, 2,180 cfs Aug. 7, 1962; no flow at times in several years.

REMARKS.--Records excellent. Daily diversions computed on basis of head on intake gates and gate openings. Records published herein represent flow diverted from Colorado River for irrigation of 91,453 acres during the 1972 calendar year. Return flows to Colorado River are measured by 11 wasteways and drains extending throughout the project; 5 of these are equipped with water-stage recorder and Parshall flume, 3 are equipped with Sparling flowmeters. Return flows have not been subtracted; combined monthly return flows are given in table below.

REVISIONS (WATER YEARS).--WSP 1213: 1946-48.

DISCHARGE, IN CUBIC FEET PER SECOND, WATER YEAR OCTOBER 1972 TO SEPTEMBER 1973

DAY	OCT	NOV	DEC	JAN	FEB	MAR	APR	MAY	JUN	JUL	AUG	SEP
1	971	922	972	0	770	656	1,270	1,830	1,680	1,780	1,870	1,670
2	1,090	942	837	0	957	743	1,470	1,740	1,790	1,840	1,880	1,520
3	1,130	953	772	0	960	892	1,490	1,800	1,590	1,810	1,890	1,550
4	1,120	963	856	0	876	841	1,620	1,800	1,650	1,750	1,860	1,630
5	1,060	817	827	0	1,030	1,150	1,590	1,790	1,660	1,890	1,740	1,760
6	930	858	813	0	1,020	1,160	1,640	1,710	1,740	1,850	1,800	1,800
7	306	1,090	795	0	992	1,260	1,650	1,810	1,670	1,800	1,780	1,860
8	339	1,090	836	0	996	1,170	1,490	1,960	1,740	1,890	1,800	1,990
9	396	1,010	851	0	1,100	1,050	1,540	2,020	1,660	1,990	1,810	1,900
10	434	1,030	787	750	979	1,080	1,690	2,100	1,690	1,930	1,880	1,860
11	410	657	820	776	830	822	1,820	2,080	1,860	1,910	1,830	1,850
12	410	991	735	974	806	583	1,820	2,040	1,770	1,950	1,700	1,730
13	456	819	906	951	680	417	1,880	1,800	1,780	1,960	1,810	1,670
14	465	1,060	913	792	668	321	1,880	1,820	1,770	1,970	1,770	1,620
15	409	1,010	936	933	636	299	1,630	1,910	1,710	2,000	1,780	1,380
16	493	887	867	1,080	621	306	1,660	1,910	1,630	1,850	1,740	1,260
17	509	602	806	1,060	621	449	1,740	1,940	1,500	1,950	1,420	1,290
18	409	635	913	1,050	552	485	1,820	1,890	1,600	1,900	1,410	1,380
19	298	571	931	930	667	867	1,820	1,810	1,640	1,930	1,330	1,590
20	308	662	921	822	736	1,070	1,820	1,670	1,740	1,920	1,500	1,640
21	288	687	1,040	759	561	1,210	1,700	1,770	1,750	1,990	1,560	1,680
22	283	684	1,060	907	391	1,260	1,460	1,780	1,740	2,020	1,530	1,620
23	296	686	951	865	377	1,330	1,750	1,800	1,810	2,040	1,560	1,550
24	322	827	571	874	396	1,190	1,760	1,720	1,650	1,970	1,570	1,500
25	333	764	421	904	410	1,170	1,790	1,510	1,790	1,950	1,660	1,400
26	434	775	931	883	399	1,300	1,860	1,500	1,750	1,920	1,530	1,310
27	418	861	1,200	719	437	1,390	1,900	1,450	1,780	2,040	1,630	1,350
28	509	844	1,260	639	605	1,490	1,960	1,620	1,790	1,900	1,750	1,270
29	533	855	1,360	688	------	1,430	1,890	1,680	1,780	1,970	1,790	1,130
30	707	932	1,250	716	------	1,420	1,980	1,630	1,910	1,810	1,810	880
31	746	------	912	765	------	1,430	------	1,640	------	1,950	1,760	------
TOTAL	16,812	25,484	28,050	18,837	20,073	30,241	51,390	55,530	51,620	59,430	52,750	46,640
MEAN	542	849	905	608	717	976	1,713	1,791	1,721	1,917	1,702	1,555
MAX	1,130	1,090	1,360	1,080	1,100	1,490	1,980	2,100	1,910	2,040	1,890	1,990
MIN	283	571	421	0	377	299	1,270	1,450	1,500	1,750	1,330	880
AC-FT	33,350	50,550	55,640	37,360	39,810	59,980	101,900	110,100	102,400	117,900	104,600	92,510
(a)	41,540	33,960	37,940	29,130	29,090	31,370	35,640	43,450	40,770	42,640	45,390	44,840

CAL YR 1972 TOTAL 446,801 MEAN 1,221 MAX 2,040 MIN 0 AC-FT 886,200 a 446,600
WTR YR 1973 TOTAL 456,857 MEAN 1,252 MAX 2,100 MIN 0 AC-FT 906,200 a 455,800

a Return flows, in acre-feet, to Colorado River.

09429010 COLORADO RIVER AT PALO VERDE DAM, ARIZ.-CALIF.

LOCATION.--Lat 33°43'55", long 114°30'40", in NW¼NE¼ sec.19, T.5 S., R.24 E., San Bernardino meridian, in California, Riverside County, on west side of Palo Verde Diversion Dam, 10 miles northeast of Blythe, Calif., and 44 miles downstream from Headgate Rock Dam.

DRAINAGE AREA.--182,200 sq mi, approximately.

PERIOD OF RECORD.--April 1969 to current year. If records (available in files of Tucson district office) for Colorado River Indian Reservation drains entering below Palo Verde Dam are added to records for this station, records equivalent to those published 1956-69 as Colorado River below Palo Verde Dam can be obtained.

GAGE.--Water-stage recorders above and below dam to record head and water-stage recorder to record gate opening. Datum of gages is at mean sea level.

EXTREMES.--Current year: Maximum daily discharge, 12,500 cfs Apr. 14; minimum daily, 1,060 cfs Nov. 24.
Period of record: Maximum daily discharge, 13,200 cfs Apr. 8, 1970; minimum daily, 1,060 cfs Nov. 24, 1972.

REMARKS.--Records excellent. Record does not include diversion to Palo Verde Canal. (See elsewhere in this report.) Daily discharge computed from relation between discharge, head, and gate openings. Many diversions above station for irrigation, municipal, and industrial uses. Flow regulated by Lake Mead, Lake Mohave, and Lake Havasu.

DISCHARGE, IN CUBIC FEET PER SECOND, WATER YEAR OCTOBER 1972 TO SEPTEMBER 1973

DAY	OCT	NOV	DEC	JAN	FEB	MAR	APR	MAY	JUN	JUL	AUG	SEP
1	7,810	4,990	3,830	6,420	5,610	7,020	9,990	9,690	6,340	10,100	9,860	7,450
2	7,950	5,020	4,500	5,390	4,540	6,240	10,400	9,710	7,370	11,300	9,040	7,950
3	7,340	4,460	4,440	6,570	6,420	8,010	10,500	8,860	6,640	9,710	8,670	8,270
4	6,150	5,440	4,560	7,030	6,640	8,120	10,400	8,690	7,560	9,910	8,820	8,690
5	6,630	5,510	5,320	5,990	6,470	8,050	9,550	9,620	7,320	9,380	9,150	8,320
6	5,720	5,510	6,420	6,720	6,060	9,300	11,300	9,480	6,720	9,650	8,800	8,140
7	2,740	5,250	4,700	7,010	5,420	9,070	11,700	9,330	7,310	9,670	8,700	7,470
8	2,070	4,840	5,870	7,200	4,860	8,750	12,300	9,110	8,010	9,800	8,420	8,010
9	1,600	3,830	6,050	6,740	4,890	8,540	11,800	8,480	8,530	9,540	8,880	8,350
10	2,600	3,640	5,870	4,160	6,110	6,500	11,300	7,620	8,900	9,440	8,190	8,560
11	2,110	5,630	6,230	3,840	6,660	8,610	10,300	7,760	8,970	8,670	10,300	8,780
12	1,820	5,390	5,860	3,460	4,050	7,740	9,770	9,050	8,600	8,430	10,800	8,560
13	1,610	5,170	5,650	4,390	3,830	4,950	10,100	9,030	8,440	8,590	9,980	7,640
14	1,580	5,170	5,270	4,320	3,830	5,470	12,500	9,150	7,960	9,560	9,980	7,410
15	1,820	3,680	5,080	4,170	4,020	4,990	11,300	8,690	8,020	10,200	8,870	8,030
16	2,670	3,260	5,210	4,090	3,180	5,370	11,100	8,200	7,790	10,200	9,030	8,290
17	3,170	2,620	4,880	2,920	4,380	6,760	10,900	8,280	7,730	10,600	9,270	8,110
18	3,440	1,690	4,740	3,580	5,760	7,400	10,100	8,010	8,080	9,880	8,780	8,160
19	1,970	2,370	4,610	3,710	6,530	8,230	9,930	8,900	7,600	9,620	9,170	8,090
20	1,700	2,100	4,060	4,650	6,910	8,420	11,100	9,000	7,210	9,980	9,490	8,340
21	1,730	1,530	3,000	4,730	4,900	9,020	10,300	8,640	7,260	11,100	8,590	7,600
22	1,700	1,260	2,360	5,010	2,630	9,720	11,000	7,940	7,250	10,400	7,310	8,410
23	1,610	1,200	1,910	4,940	2,330	9,780	11,200	6,740	9,530	10,400	6,930	6,860
24	1,580	1,060	3,580	4,800	3,450	11,200	10,400	7,290	9,880	9,660	6,490	7,740
25	1,610	1,500	3,880	4,120	3,810	11,300	9,690	7,230	9,700	9,890	7,340	7,660
26	1,910	1,660	4,740	3,810	4,860	10,900	11,600	8,500	8,790	9,320	7,880	7,180
27	2,770	3,270	4,850	5,160	4,530	10,200	6,500	8,320	8,810	9,840	8,070	6,800
28	4,180	3,710	5,080	5,630	5,410	10,500	9,770	8,100	8,280	10,200	8,210	6,730
29	4,260	3,800	4,530	5,380	------	10,600	9,670	7,400	8,230	11,200	8,400	7,670
30	3,830	4,120	5,470	5,510	------	9,750	10,300	6,900	10,500	10,700	8,220	8,260
31	4,480	------	6,320	6,170	------	9,440	------	7,110	------	10,500	7,600	------
TOTAL	102,160	108,680	148,870	157,620	138,090	259,950	316,770	260,830	243,330	307,440	269,240	237,530
MEAN	3,295	3,623	4,802	5,085	4,932	8,385	10,560	8,414	8,111	9,917	8,685	7,918
MAX	7,950	5,630	6,420	7,200	6,910	11,300	12,500	9,710	10,500	11,300	10,800	8,780
MIN	1,580	1,060	1,910	2,920	2,330	4,950	6,500	6,740	6,340	8,430	6,490	6,730
AC-FT	202,600	215,600	295,300	312,600	273,900	515,600	628,300	517,400	482,600	609,800	534,000	471,100

CAL YR 1972 TOTAL 2,629,970 MEAN 7,186 MAX 11,800 MIN 1,060 AC-FT 5,217,000
WTR YR 1973 TOTAL 2,550,510 MEAN 6,988 MAX 12,500 MIN 1,060 AC-FT 5,059,000

09429490. Colorado River above Imperial Dam, Ariz.-Calif.

LOCATION.--Lat 32°52'59", long 114°27'55", at Imperial Dam. The Arizona end of the dam is in SW¼NW¼ sec.30, T.6 S., R.21 W., Gila and Salt River meridian; the California end is in NW¼SW¼ sec.9, T.15 S., R.24 E., San Bernardino meridian. Imperial Dam is 5 mi (8 km) upstream from Laguna Dam, 15 mi (24 km) northeast of Yuma, Ariz., 90 mi (145 km) downstream from Palo Verde Dam, and 147 mi (237 km) downstream from Parker Dam.

DRAINAGE AREA.--184,600 mi^2 (478,100 km^2), approximately.

PERIOD OF RECORD.--1903-34 (yearly discharge only, published in WSP 1313), July 1934 to current year (monthly discharge only since October 1942). Prior to October 1942 published as "near Picacho, Calif." October 1942 to September 1971 published as "at Imperial Dam" (monthly discharge shown as "flow reaching Imperial Dam", listed as supplement to "flow passing Imperial Dam").

GAGE.--None. This record is synthesized from records of several other stations (see REMARKS). July 13, 1934, to Sept. 30, 1942, water-stage recorder at site 14.5 mi (23.3 km) upstream at datum 167.38 ft (51.017 m) above mean sea level.

AVERAGE DISCHARGE.--39 years (1934-73), 11,320 ft^3/s (320.6 m^3/s), 8,201,000 acre-ft/yr (10,100 hm^3/yr).

EXTREMES.--1934-73: Maximum discharge, 40,800 ft^3/s (1,160 m^3/s) Sept. 5, 1939; minimum, 538 ft^3/s (15.2 m^3/s) Aug. 3, 1934; minimum daily since regulation of Hoover Dam began, 1,450 ft^3/s (41.1 m^3/s) Feb. 17, 1935.

REMARKS.--Records show flow of Colorado River reaching Imperial Dam, and are based on combined monthly total flow of Colorado River below Imperial Dam (sta 09429500), All-American Canal near Imperial Dam (sta 09523000), Gila Gravity Main Canal at Imperial Dam (sta 09522500), and diversions to Mittry Lake. Records for 1903-34 and for October 1942 to September 1960 were computed as combined flow of Colorado River at Yuma (sta 09521000) and the canals diverting at Imperial and Laguna Dams, less the flow of Gila River near Dome (sta 09520500); for some of these periods drainage and waste return flows and channel losses between the gaging stations and Imperial Dam were considered, and for other periods they were neglected. Records for July 1934 to September 1942 show daily discharge of Colorado River at gaging station near Picacho, Calif.

Natural flow of Colorado River at this point affected by transmountain diversions, storage reservoirs, power developments, ground-water withdrawals, and diversions for irrigation, municipal, and industrial uses, and return flows from irrigated areas. Diversions to Mittry Lake, which began June 23, 1970, are included in river records in table below. Additional regulation, beginning Jan. 31, 1966, to equalize supplies for downstream water users, is provided by pumped storage in reservoir on Senator Wash, about 2 mi (3 km) upstream from Imperial Dam. Monthend contents of Senator Wash Reservoir--capacity, 13,840 acre-ft (17.1 hm^3)--is given in table below.

COOPERATION.--Records of Sparling meter readings of diversion to Mittry Lake and contents of Senator Wash Reservoir furnished by Bureau of Reclamation.

COLORADO RIVER ABOVE IMPERIAL DAM, DIVERSIONS TO MITTRY LAKE, AND MONTHEND CONTENTS OF SENATOR WASH RESERVOIR, WATER YEAR OCTOBER 1972 TO SEPTEMBER 1973

Month	Discharge of Colorado River		Diversions to Mittry Lake (acre-feet)*	Monthend contents, Senator Wash Reservoir (acre-feet)
	Mean (cubic feet per second)	Runoff in acre-feet		
October	4,798	295,000	575	3,130
November	4,490	267,200	292	6,770
December	5,535	340,400	598	3,740
CAL YR 1972	7,988	5,799,000	5,660	-
January	5,839	359,000	600	5,260
February	5,566	309,100	546	10,660
March	8,713	535,700	593	6,010
April	11,150	663,700	598	5,790
May	9,358	575,400	734	8,290
June	8,820	524,800	616	5,890
July	10,500	645,700	733	5,800
August	10,030	616,600	744	8,010
September	9,174	545,900	699	2,780
WTR YR 1973	7,844	5,678,000	7,330	-

* Included in first two columns of table.

NOTE.--Discharge of Colorado River, in first two columns of table above, is combined discharge of Colorado River below Imperial Dam (sta 09429500) and diversions to All-American Canal, Gila Gravity Main Canal, and Mittry Lake.

09429500 COLORADO RIVER BELOW IMPERIAL DAM, ARIZ.-CALIF.

LOCATION.--Forebay gage: Lat 32°52'59", long 114°27'57", in NW¼SW¼ sec.9, T.15 S., R.24 E., San Bernardino meridian, in California, Imperial County, near All-American Canal headworks at west end of Imperial Dam, 5 miles upstream from Laguna Dam, 15 miles northeast of Yuma, 90 miles downstream from Palo Verde Dam, and 147 miles downstream from Parker Dam.

DRAINAGE AREA.--184,600 sq mi, approximately.

PERIOD OF RECORD.--October 1960 to current year. Prior to October 1971, published as "at Imperial Dam." Records of flow reaching Imperial Dam, formerly published with this station, are now published separately as sta 09429490, Colorado River above Imperial Dam.

GAGE.--Water-stage recorder in forebay, 12 calibrated gates on California sluiceway, 8 calibrated gates on Gila sluiceway, and calibrated manometer on each discharge pipe from desilting basin. Datum of forebay gage is 162.00 ft above mean sea level (Bureau of Reclamation bench mark).

EXTREMES.--Current year: Maximum daily discharge, 3,680 cfs Oct. 7; minimum daily, 225 cfs Nov. 1-5, 7.
Period of record: Maximum daily discharge, 5,040 cfs Mar. 3, 1970; minimum daily, 27 cfs Dec. 15-18, 1969.

REMARKS.--Records good. Records of daily discharge show flow of Colorado River passing Imperial Dam, and include water released to river through California and Gila sluiceways, sludge from desilting basins returned to river, and leakage through dam. Records of flow reaching Imperial Dam, formerly published as supplement to this station, are now published separately (see sta 09429490).
Flow of Colorado River regulated by many reservoirs, principally Lake Mead, since 1935. Many diversions from Colorado River and tributaries above station. Diversion to Mittry Lake and monthend contents of Senator Wash Reservoir also are now published with sta 09429490.

COOPERATION.--Records of gate openings furnished by Bureau of Reclamation. Records of sludge return flow from desilting basins furnished by Imperial Irrigation District.

DISCHARGE, IN CUBIC FEET PER SECOND, WATER YEAR OCTOBER 1972 TO SEPTEMBER 1973

DAY	OCT	NOV	DEC	JAN	FEB	MAR	APR	MAY	JUN	JUL	AUG	SEP
1	236	225	434	238	239	249	330	330	248	228	638	275
2	336	225	404	238	239	249	610	330	248	418	347	275
3	236	225	242	238	239	249	330	528	248	332	347	275
4	236	225	241	238	239	249	330	621	248	238	642	275
5	236	225	390	238	239	249	330	350	248	338	347	275
6	2,460	344	437	238	339	438	330	350	248	443	357	364
7	3,680	225	241	238	239	249	330	350	248	348	461	265
8	2,560	511	241	238	434	248	330	350	248	348	357	265
9	981	235	241	521	239	248	330	350	248	348	357	265
10	441	235	241	334	239	722	518	250	248	348	357	265
11	226	235	240	238	239	722	519	250	332	348	357	265
12	226	235	240	238	239	778	424	250	322	348	357	450
13	309	235	240	238	239	422	330	250	228	348	357	547
14	327	426	240	239	239	1,500	330	250	228	348	1,040	548
15	226	235	428	239	239	468	330	250	419	348	1,810	245
16	226	247	524	430	239	248	330	250	308	348	1,130	245
17	226	609	239	430	239	248	330	250	228	348	609	245
18	512	307	339	239	239	248	330	250	423	348	367	245
19	694	261	239	239	239	243	330	250	228	348	367	245
20	2,220	235	239	239	239	233	330	250	323	348	434	245
21	742	235	239	239	792	333	330	344	228	348	1,100	245
22	501	235	238	239	1,260	333	330	250	228	348	1,480	245
23	226	408	238	239	1,300	333	330	250	228	536	878	245
24	226	247	238	239	315	332	330	344	228	535	541	345
25	226	243	238	239	349	332	330	344	228	536	277	245
26	226	243	238	239	249	332	516	250	416	442	277	245
27	226	243	238	239	249	429	330	250	371	348	277	245
28	226	243	237	239	249	427	330	250	415	348	277	245
29	226	243	237	239	------	332	330	250	323	348	277	245
30	232	243	237	239	------	332	330	250	228	348	277	245
31	226	------	237	239	------	332	------	250	------	442	277	------
TOTAL	19,877	8,283	8,695	8,157	9,838	12,107	10,837	9,341	8,412	11,448	16,976	8,629
MEAN	641	276	280	263	351	391	361	301	280	369	548	288
MAX	3,680	609	524	521	1,300	1,500	610	621	423	536	1,810	548
MIN	226	225	237	238	239	233	330	250	228	228	277	245
AC-FT	39,430	16,430	17,250	16,180	19,510	24,010	21,500	18,530	16,690	22,710	33,670	17,120

CAL YR 1972 TOTAL 125,161 MEAN 342 MAX 3,680 MIN 224 AC-FT 248,300
WTR YR 1973 TOTAL 132,600 MEAN 363 MAX 3,680 MIN 225 AC-FT 263,000

09429600 COLORADO RIVER BELOW LAGUNA DAM, ARIZ.-CALIF.

LOCATION.--Lat 32°48'44", long 114°30'51", in SE¼NE¼ sec.35, T.15 S., R.23 E., San Bernardino meridian, in California, Imperial County, on right bank 1.4 miles downstream from Laguna Dam, 2.8 miles northeast of Bard, Calif., and 10 miles northeast of Yuma, Ariz.

DRAINAGE AREA.--184,700 sq mi, approximately.

PERIOD OF RECORD.--December 1971 to current year.

GAGE.--Water-stage recorder. Datum of gage is 120.84 ft above mean sea level (Bureau of Reclamation bench mark).

EXTREMES.--Current year: Maximum discharge, 3,650 cfs Oct. 7 (gage height, 10.09 ft); minimum daily, 71 cfs May 29.
Period of record: Maximum discharge, 3,650 cfs Oct. 7, 1972 (gage height, 10.09 ft); minimum daily, 71 cfs May 29, 1973.

REMARKS.--Records good. Natural flow of Colorado River at this point is affected by transmountain diversions, storage reservoirs, power developments, ground-water withdrawals, diversions for irrigation, municipal and industrial uses, and return flows from irrigated areas. Flow past station consists mainly of water released through Imperial Dam, sludge from the desilting basins at Imperial Dam, seepage through Imperial Dam, and seepage from the All-American Canal and the Gila Gravity Main Canal.

DISCHARGE, IN CUBIC FEET PER SECOND, WATER YEAR OCTOBER 1972 TO SEPTEMBER 1973

DAY	OCT	NOV	DEC	JAN	FEB	MAR	APR	MAY	JUN	JUL	AUG	SEP
1	259	295	373	337	283	506	358	340	217	260	356	276
2	314	295	382	325	283	430	357	333	222	258	364	276
3	320	300	325	319	285	316	354	337	242	245	358	276
4	313	303	340	322	280	300	352	342	246	223	364	289
5	313	278	460	308	278	295	631	345	249	312	369	309
6	1,040	248	706	328	373	263	649	316	249	365	367	311
7	3,320	248	322	310	303	248	399	330	254	359	353	315
8	3,010	253	298	295	273	260	366	456	236	357	322	297
9	1,340	238	295	275	340	270	360	465	440	353	312	278
10	542	300	295	255	406	275	344	456	497	354	329	439
11	263	421	290	250	349	319	327	398	473	485	339	523
12	182	376	290	305	303	409	344	287	462	548	342	493
13	221	300	288	424	300	282	349	276	328	526	345	508
14	298	245	288	415	298	1,440	344	275	254	469	940	376
15	229	238	260	391	295	670	324	270	230	415	1,810	288
16	299	305	253	295	295	670	319	271	208	378	1,300	288
17	313	433	275	253	293	583	318	271	214	372	580	372
18	282	388	376	253	293	520	366	268	233	372	570	452
19	295	427	513	255	290	397	630	272	242	369	478	448
20	1,930	382	370	258	303	328	575	276	247	369	437	404
21	1,010	352	248	270	273	400	392	270	252	364	492	326
22	485	373	283	270	766	403	390	215	255	362	1,320	308
23	400	331	263	391	1,580	400	378	196	415	354	888	302
24	349	331	230	460	481	394	369	238	545	329	549	267
25	379	337	208	424	397	394	364	245	431	332	308	265
26	403	322	230	370	406	388	339	241	286	363	391	266
27	400	319	278	300	403	364	332	228	267	344	400	283
28	412	325	295	295	448	340	336	141	243	494	306	281
29	406	316	322	298	------	343	340	71	470	774	304	279
30	373	325	364	300	------	346	340	184	572	537	290	272
31	308	------	352	288	------	352	------	222	------	379	279	------
TOTAL	20,008	9,604	10,072	9,839	10,877	12,905	11,646	8,835	9,479	12,021	16,162	10,067
MEAN	645	320	325	317	388	416	388	285	316	388	521	336
MAX	3,320	433	706	460	1,580	1,440	649	465	572	774	1,810	523
MIN	182	238	208	250	273	248	318	71	208	223	279	265
AC-FT	39,690	19,050	19,980	19,520	21,570	25,600	23,100	17,520	18,800	23,840	32,060	19,970

CAL YR 1972 TOTAL 134,708 MEAN 368 MAX 3,320 MIN 182 AC-FT 267,200
WTR YR 1973 TOTAL 141,515 MEAN 388 MAX 3,320 MIN 71 AC-FT 280,700

09521100 COLORADO RIVER BELOW YUMA MAIN CANAL WASTEWAY, AT YUMA, ARIZ.

LOCATION.--Lat 32°43'54", long 114°37'55", in SW¼SW¼ sec.26, T.16 S., R.22 E., San Bernardino meridian, in California, Imperial County, on right bank 1,000 ft downstream from Yuma Main Canal wasteway, 0.6 mile downstream from former gaging station on Colorado River at Yuma, 1.1 miles northwest of post office in Yuma, 5.2 miles downstream from Gila River, and 6.4 miles upstream from northerly international boundary.

DRAINAGE AREA.--242,900 sq mi, approximately, including all closed basins entirely within the drainage boundary.

PERIOD OF RECORD.--October 1963 to current year. If records for Yuma Main Canal wasteway at Yuma (sta 09525000) and Reservation Main Drain No. 4 (sta 09530000) are subtracted from records at this station, records equivalent to those published 1902-64 as "Colorado River at Yuma" (sta 09521000) can be obtained.

GAGE.--Water-stage recorder. Datum of gage is 101.99 ft above mean sea level.

AVERAGE DISCHARGE.--10 years, 851 cfs (616,500 acre-ft per year).

EXTREMES.--Current year: Maximum discharge, 3,480 cfs Oct. 8 (gage height, 14.61 ft); minimum daily, 460 cfs Dec. 16.
Period of record: Maximum discharge, 5,040 cfs Mar. 3, 1970 (gage height, 15.05 ft); minimum daily, 260 cfs Jan. 17, 1970.
Maximum gage height since at least 1878, 34.0 ft Jan. 22, 1916 (discharge, 250,000 cfs), at former gaging station at Yuma.

REMARKS.--Records excellent. Natural flow of stream affected by transmountain diversions, storage reservoirs, power developments, ground-water withdrawals and diversions for irrigation, municipal and industrial uses, and return flows from irrigated areas.

DISCHARGE, IN CUBIC FEET PER SECOND, WATER YEAR OCTOBER 1972 TO SEPTEMBER 1973

DAY	OCT	NOV	DEC	JAN	FEB	MAR	APR	MAY	JUN	JUL	AUG	SEP
1	547	574	583	570	788	683	633	1,230	1,450	880	538	1,320
2	588	583	543	543	788	724	706	1,250	1,460	764	546	1,150
3	592	579	620	534	766	556	609	1,220	1,460	776	547	1,170
4	588	592	484	556	725	549	597	1,220	1,450	732	525	1,190
5	592	570	538	556	755	529	731	1,140	1,440	702	533	1,190
6	766	579	745	552	1,060	510	958	911	1,460	795	548	1,210
7	2,990	597	1,040	574	1,030	484	694	928	1,490	768	556	1,210
8	3,380	579	516	543	1,050	502	616	936	1,390	744	536	1,210
9	2,100	583	512	534	1,060	528	601	1,050	1,250	705	512	1,200
10	980	583	516	504	1,320	544	655	1,280	1,290	690	492	1,190
11	645	597	508	488	1,300	552	589	1,240	1,300	731	485	1,160
12	496	565	508	496	1,260	705	592	1,210	1,490	881	484	1,180
13	516	561	512	615	1,260	548	593	1,220	1,750	854	508	1,120
14	615	570	504	620	1,170	1,210	611	1,200	1,780	842	656	1,150
15	496	565	496	592	496	1,120	571	1,220	1,750	746	1,600	1,140
16	561	597	460	543	492	906	549	1,240	1,670	682	1,720	1,180
17	597	680	492	476	520	827	564	1,220	1,800	658	788	1,150
18	561	601	516	512	512	789	571	1,220	1,750	682	780	1,120
19	565	597	725	1,060	500	671	799	1,240	1,760	687	696	1,120
20	1,290	579	725	826	500	588	816	1,280	1,780	693	764	1,110
21	1,630	547	512	730	516	621	674	1,300	1,850	676	559	1,150
22	670	565	520	755	655	662	619	1,320	1,900	685	1,130	1,120
23	583	552	534	777	1,500	665	602	1,300	1,780	668	1,300	1,110
24	492	547	512	755	903	667	585	1,300	1,800	635	836	1,110
25	496	556	484	766	592	659	601	1,330	1,790	528	524	1,150
26	534	565	472	771	620	659	570	1,330	1,820	547	506	1,110
27	538	547	512	777	592	640	539	1,370	1,820	547	608	1,130
28	547	601	534	804	655	611	581	1,360	1,850	534	502	1,130
29	552	645	538	804	------	620	1,610	1,270	1,830	881	585	1,160
30	574	705	570	810	------	606	1,250	1,330	1,890	782	1,400	1,130
31	640	------	583	793	------	617	------	1,420	------	606	1,120	------
TOTAL	26,721	17,561	17,314	20,236	23,385	20,552	20,686	38,085	49,300	22,101	22,884	34,770
MEAN	862	585	559	653	835	663	690	1,229	1,643	713	738	1,159
MAX	3,380	705	1,040	1,060	1,500	1,210	1,610	1,420	1,900	881	1,720	1,320
MIN	492	547	460	476	492	484	539	911	1,250	528	484	1,110
AC-FT	53,000	34,830	34,340	40,140	46,380	40,760	41,030	75,540	97,790	43,840	45,390	68,970

CAL YR 1972 TOTAL 259,018 MEAN 708 MAX 3,380 MIN 442 AC-FT 513,800
WTR YR 1973 TOTAL 313,595 MEAN 859 MAX 3,380 MIN 460 AC-FT 622,000

09429600 COLORADO RIVER BELOW LAGUNA DAM, ARIZ.-CALIF.

LOCATION.--Lat 32°48'44", long 114°30'51", in SE¼NE¼ sec.35, T.15 S., R.23 E., San Bernardino meridian, in California, Imperial County, on right bank 1.4 miles downstream from Laguna Dam, 2.8 miles northeast of Bard, Calif., and 10 miles northeast of Yuma, Ariz.

DRAINAGE AREA.--184,700 sq mi, approximately.

PERIOD OF RECORD.--December 1971 to current year.

GAGE.--Water-stage recorder. Datum of gage is 120.84 ft above mean sea level (Bureau of Reclamation bench mark).

EXTREMES.--Current year: Maximum discharge, 3,650 cfs Oct. 7 (gage height, 10.09 ft); minimum daily, 71 cfs May 29.
Period of record: Maximum discharge, 3,650 cfs Oct. 7, 1972 (gage height, 10.09 ft); minimum daily, 71 cfs May 29, 1973.

REMARKS.--Records good. Natural flow of Colorado River at this point is affected by transmountain diversions, storage reservoirs, power developments, ground-water withdrawals, diversions for irrigation, municipal and industrial uses, and return flows from irrigated areas. Flow past station consists mainly of water released through Imperial Dam, sludge from the desilting basins at Imperial Dam, seepage through Imperial Dam, and seepage from the All-American Canal and the Gila Gravity Main Canal.

DISCHARGE, IN CUBIC FEET PER SECOND, WATER YEAR OCTOBER 1972 TO SEPTEMBER 1973

DAY	OCT	NOV	DEC	JAN	FEB	MAR	APR	MAY	JUN	JUL	AUG	SEP
1	259	295	373	337	283	506	358	340	217	260	356	276
2	314	295	382	325	283	430	357	333	222	258	364	276
3	320	300	325	319	285	316	354	337	242	245	358	276
4	313	303	340	322	280	300	352	342	246	223	364	289
5	313	278	460	308	278	295	631	345	249	312	369	309
6	1,040	248	706	328	373	263	649	316	249	365	367	311
7	3,320	248	322	310	303	248	399	330	254	359	353	315
8	3,010	253	298	295	273	260	366	456	236	357	322	297
9	1,340	238	295	275	340	270	360	465	440	353	312	278
10	542	300	295	255	406	275	344	456	497	354	329	439
11	263	421	290	250	349	319	327	398	473	485	339	523
12	182	376	290	305	303	409	344	287	462	548	342	493
13	221	300	288	424	300	282	349	276	328	526	345	508
14	298	245	288	415	298	1,440	344	275	254	469	940	376
15	229	238	260	391	295	670	324	270	230	415	1,810	288
16	299	305	253	295	295	670	319	271	208	378	1,300	288
17	313	433	275	253	293	583	318	271	214	372	580	372
18	282	388	376	253	293	520	366	268	233	372	570	452
19	295	427	513	255	290	397	630	272	242	369	478	448
20	1,930	382	370	258	303	328	575	276	247	369	437	404
21	1,010	352	248	270	273	400	392	270	252	364	492	326
22	485	373	283	270	766	403	390	215	255	362	1,320	308
23	400	331	263	391	1,580	400	378	196	415	354	888	302
24	349	331	230	460	481	394	369	238	545	329	549	267
25	379	337	208	424	397	394	364	245	431	332	308	265
26	403	322	230	370	406	388	339	241	286	363	391	266
27	400	319	278	300	403	364	332	228	267	344	400	283
28	412	325	295	295	448	340	336	141	243	494	306	281
29	406	316	322	298	------	343	340	71	470	774	304	279
30	373	325	364	300	------	346	340	184	572	537	290	272
31	308	------	352	288	------	352	------	222	------	379	279	------
TOTAL	20,008	9,604	10,072	9,839	10,877	12,905	11,646	8,835	9,479	12,021	16,162	10,067
MEAN	645	320	325	317	388	416	388	285	316	388	521	336
MAX	3,320	433	706	460	1,580	1,440	649	465	572	774	1,810	523
MIN	182	238	208	250	273	248	318	71	208	223	279	265
AC-FT	39,690	19,050	19,980	19,520	21,570	25,600	23,100	17,520	18,800	23,840	32,060	19,970

CAL YR 1972 TOTAL 134,708 MEAN 368 MAX 3,320 MIN 182 AC-FT 267,200
WTR YR 1973 TOTAL 141,515 MEAN 388 MAX 3,320 MIN 71 AC-FT 280,700

09521100 COLORADO RIVER BELOW YUMA MAIN CANAL WASTEWAY, AT YUMA, ARIZ.

LOCATION.--Lat 32°43'54", long 114°37'55", in SW¼SW¼ sec.26, T.16 S., R.22 E., San Bernardino meridian, in California, Imperial County, on right bank 1,000 ft downstream from Yuma Main Canal wasteway, 0.6 mile downstream from former gaging station on Colorado River at Yuma, 1.1 miles northwest of post office in Yuma, 5.2 miles downstream from Gila River, and 6.4 miles upstream from northerly international boundary.

DRAINAGE AREA.--242,900 sq mi, approximately, including all closed basins entirely within the drainage boundary.

PERIOD OF RECORD.--October 1963 to current year. If records for Yuma Main Canal wasteway at Yuma (sta 09525000) and Reservation Main Drain No. 4 (sta 09530000) are subtracted from records at this station, records equivalent to those published 1902-64 as "Colorado River at Yuma" (sta 09521000) can be obtained.

GAGE.--Water-stage recorder. Datum of gage is 101.99 ft above mean sea level.

AVERAGE DISCHARGE.--10 years, 851 cfs (616,500 acre-ft per year).

EXTREMES.--Current year: Maximum discharge, 3,480 cfs Oct. 8 (gage height, 14.61 ft); minimum daily, 460 cfs Dec. 16.

Period of record: Maximum discharge, 5,040 cfs Mar. 3, 1970 (gage height, 15.05 ft); minimum daily, 260 cfs Jan. 17, 1970.

Maximum gage height since at least 1878, 34.0 ft Jan. 22, 1916 (discharge, 250,000 cfs), at former gaging station at Yuma.

REMARKS.--Records excellent. Natural flow of stream affected by transmountain diversions, storage reservoirs, power developments, ground-water withdrawals and diversions for irrigation, municipal and industrial uses, and return flows from irrigated areas.

DISCHARGE, IN CUBIC FEET PER SECOND, WATER YEAR OCTOBER 1972 TO SEPTEMBER 1973

DAY	OCT	NOV	DEC	JAN	FEB	MAR	APR	MAY	JUN	JUL	AUG	SEP
1	547	574	583	570	788	683	633	1,230	1,450	880	538	1,320
2	588	583	543	543	788	724	706	1,250	1,460	764	546	1,150
3	592	579	620	534	766	556	609	1,220	1,460	776	547	1,170
4	588	592	484	556	725	549	597	1,220	1,450	732	525	1,190
5	592	570	538	556	755	529	731	1,140	1,440	702	533	1,190
6	766	579	745	552	1,060	510	958	911	1,460	795	548	1,210
7	2,990	597	1,040	574	1,030	484	694	928	1,490	768	556	1,210
8	3,380	579	516	543	1,050	502	616	936	1,390	744	536	1,210
9	2,100	583	512	534	1,060	528	601	1,050	1,250	705	512	1,200
10	980	583	516	504	1,320	544	655	1,280	1,290	690	492	1,190
11	645	597	508	488	1,300	552	589	1,240	1,300	731	485	1,160
12	496	565	508	496	1,260	705	592	1,210	1,490	881	484	1,180
13	516	561	512	615	1,260	548	593	1,220	1,750	854	508	1,120
14	615	570	504	620	1,170	1,210	611	1,200	1,780	842	656	1,150
15	496	565	496	592	496	1,120	571	1,220	1,750	746	1,600	1,140
16	561	597	460	543	492	906	549	1,240	1,670	682	1,720	1,180
17	597	680	492	476	520	827	564	1,220	1,800	658	788	1,150
18	561	601	516	512	512	789	571	1,220	1,750	682	780	1,120
19	565	597	725	1,060	500	671	799	1,240	1,760	687	696	1,120
20	1,290	579	725	826	500	588	816	1,280	1,780	693	764	1,110
21	1,630	547	512	730	516	621	674	1,300	1,850	676	559	1,150
22	670	565	520	755	655	662	619	1,320	1,900	685	1,130	1,120
23	583	552	534	777	1,500	665	602	1,300	1,780	668	1,300	1,110
24	492	547	512	755	903	667	585	1,300	1,800	635	836	1,110
25	496	556	484	766	592	659	601	1,330	1,790	528	524	1,150
26	534	565	472	771	620	659	570	1,330	1,820	547	506	1,110
27	538	547	512	777	592	640	539	1,370	1,820	547	608	1,130
28	547	601	534	804	655	611	581	1,360	1,850	534	502	1,130
29	552	645	538	804	------	620	1,610	1,270	1,830	881	585	1,160
30	574	705	570	810	------	606	1,250	1,330	1,890	782	1,400	1,130
31	640	------	583	793	------	617	------	1,420	------	606	1,120	------
TOTAL	26,721	17,561	17,314	20,236	23,385	20,552	20,686	38,085	49,300	22,101	22,884	34,770
MEAN	862	585	559	653	835	663	690	1,229	1,643	713	738	1,159
MAX	3,380	705	1,040	1,060	1,500	1,210	1,610	1,420	1,900	881	1,720	1,320
MIN	492	547	460	476	492	484	539	911	1,250	528	484	1,110
AC-FT	53,000	34,830	34,340	40,140	46,380	40,760	41,030	75,540	97,790	43,840	45,390	68,970

CAL YR 1972 TOTAL 259,018 MEAN 708 MAX 3,380 MIN 442 AC-FT 513,800
WTR YR 1973 TOTAL 313,595 MEAN 859 MAX 3,380 MIN 460 AC-FT 622,000

09522000 COLORADO RIVER AT NORTHERLY INTERNATIONAL BOUNDARY ABOVE MORELOS DAM, NEAR ANDRADE, CALIF.

LOCATION.--Lat 32°43'07", long 114°43'05", in NE¼SE¼ sec.21, T.8 S., R.24 W., Gila and Salt River meridian, in Arizona, Yuma County, on left bank at northerly international boundary, 0.5 mile east of Andrade, 1.1 miles upstream from Morelos Dam, 1.1 miles downstream from Rockwood Gate, and 6.4 miles downstream from gaging station on Colorado River below Yuma Main Canal wasteway.

DRAINAGE AREA.--243,000 sq mi, approximately, including all closed basins entirely within the drainage boundary.

PERIOD OF RECORD.--January 1950 to current year. Prior to October 1958, published as "at international boundary."

GAGE.--Water-stage recorder. Datum of gage is at mean sea level. Supplementary water-stage recorder 1,680 ft upstream at same datum.

EXTREMES.--Current year: Maximum discharge, 5,290 cfs Oct. 8; maximum elevation, 111.51 ft Oct. 8; minimum discharge, 518 cfs Oct. 12; minimum elevation, 101.92 ft Dec. 4.
Period of record: Maximum discharge, 25,390 cfs Jan. 1, 1953; maximum elevation, 114.24 ft Jan. 28, 1958; minimum discharge, 495 cfs Sept. 28, 1970; minimum elevation, 101.82 ft Sept. 18, 1971.

REMARKS.--This record shows water passing northerly international boundary. Minor diversions to the United States below this station from river and by pumping from ground water for irrigation in the floodway between river and Yuma levee.

COOPERATION.--Records furnished by International Boundary and Water Commission, U.S. Section (monthly summary figures rounded in accordance with Geological Survey standard practice).

DISCHARGE, IN CUBIC FEET PER SECOND, WATER YEAR OCTOBER 1972 TO SEPTEMBER 1973

DAY	OCT	NOV	DEC	JAN	FEB	MAR	APR	MAY	JUN	JUL	AUG	SEP
1	716	719	746	2,090	925	2,350	2,790	1,320	1,370	1,970	2,290	1,370
2	706	702	711	2,340	925	2,620	2,790	1,340	1,430	2,160	2,310	1,280
3	735	719	802	2,360	925	2,600	2,800	1,320	1,450	2,200	2,340	1,290
4	726	711	651	2,420	882	2,600	2,850	1,310	1,450	2,160	2,330	1,290
5	726	711	719	2,460	872	2,560	2,840	1,320	1,430	2,210	2,240	1,330
6	804	696	927	2,400	1,220	2,620	2,840	1,070	1,450	2,230	2,230	1,330
7	3,860	755	1,280	2,110	1,220	2,620	2,800	1,020	1,520	2,240	2,280	1,340
8	5,230	719	1,640	2,210	1,250	2,580	2,880	1,020	1,460	2,240	2,280	1,370
9	3,140	728	1,700	2,240	1,220	2,620	2,860	1,050	1,330	2,260	2,280	1,340
10	1,350	728	1,700	2,210	1,510	2,630	2,860	1,300	1,410	2,240	2,280	1,330
11	783	746	1,630	2,180	1,490	2,630	2,860	1,320	1,360	2,200	2,260	1,310
12	583	719	1,600	2,210	1,510	2,600	3,130	1,310	1,530	2,170	2,280	1,320
13	640	711	1,620	2,210	1,510	2,620	2,830	1,310	1,790	2,190	2,310	1,300
14	669	728	1,590	2,200	1,450	3,130	2,850	1,320	1,820	2,190	2,280	1,280
15	620	719	1,590	2,200	1,650	2,940	2,840	1,330	1,850	2,290	2,310	1,310
16	693	746	1,580	1,880	1,630	2,870	2,820	1,340	1,780	2,540	2,310	1,330
17	728	793	1,590	1,620	1,870	2,890	2,640	1,310	1,880	2,540	2,080	1,320
18	711	719	1,590	1,600	1,820	2,910	2,500	1,310	1,880	2,520	2,100	1,310
19	719	711	1,890	1,290	1,840	2,940	2,560	1,310	1,860	2,520	2,060	1,290
20	1,120	746	1,890	1,030	1,860	3,000	2,520	1,320	1,860	2,240	2,270	1,280
21	1,840	737	1,660	925	1,870	3,050	2,550	1,320	1,970	2,280	1,980	1,310
22	940	737	1,640	914	1,910	3,040	2,530	1,320	1,980	2,380	2,380	1,280
23	676	728	1,670	915	2,570	3,000	2,490	1,290	1,950	2,370	2,560	1,280
24	628	719	1,630	936	2,130	2,990	2,430	1,320	1,950	2,400	2,080	1,280
25	651	719	1,590	925	1,750	3,000	2,460	1,330	1,960	2,400	1,790	1,340
26	676	728	1,590	914	1,800	2,910	2,460	1,320	1,980	2,380	1,860	1,310
27	676	728	1,630	936	1,750	2,910	2,170	1,320	1,960	2,400	1,890	1,310
28	685	755	1,660	959	2,010	2,980	1,920	1,320	1,960	2,400	1,760	1,310
29	693	802	1,670	970	------	2,970	1,620	1,230	1,980	2,400	1,760	1,360
30	685	862	1,750	970	------	3,000	1,370	1,250	2,030	2,440	1,500	1,330
31	775	------	1,800	914	------	2,980	------	1,330	------	2,540	1,190	------
TOTAL	34,184	22,041	45,736	51,538	43,369	87,160	77,860	39,600	51,630	71,700	65,870	39,430
MEAN	1,103	735	1,475	1,663	1,549	2,812	2,595	1,277	1,721	2,313	2,125	1,314
MAX	5,230	862	1,890	2,460	2,570	3,130	3,130	1,340	2,030	2,540	2,560	1,370
MIN	583	696	651	914	872	2,350	1,370	1,020	1,330	1,970	1,190	1,280
AC-FT	67,800	43,720	90,720	102,200	86,020	172,900	154,400	78,550	102,400	142,200	130,700	78,210

CAL YR 1972 TOTAL 668,045 MEAN 1,825 MAX 5,230 MIN 583 AC-FT 1,325,000
WTR YR 1973 TOTAL 630,118 MEAN 1,726 MAX 5,230 MIN 583 AC-FT 1,250,000

09522500 GILA GRAVITY MAIN CANAL AT IMPERIAL DAM, ARIZ.-CALIF.

LOCATION.--Lat 32°52'34", long 114°27'18", in SE¼SW¼ sec.30, T.6 S., R.21 W., Gila and Salt River meridian, in Arizona, Yuma County, on right bank 3,200 ft downstream from intake at east end of Imperial Dam.

PERIOD OF RECORD.--August 1943 to current year.

GAGE.--Water-stage recorder. Datum of gage is 160.00 ft above mean sea level.

AVERAGE DISCHARGE.--14 years (1959-73), 1,206 cfs (873,700 acre-ft per year).

EXTREMES.--Period of record: Maximum daily discharge, 2,240 cfs May 25, 1965; no flow at canal intake at times in several years when intake gates were closed.

REMARKS.--Records excellent except those below 100 cfs, which are fair. Gila Gravity Main Canal diverts water from Colorado River at left end of Imperial Dam for irrigation of lands in the Gila Project area in Arizona. Diversions to this canal began Aug. 17, 1943. Diversions to North Gila Valley from this canal began Dec. 16, 1954. During the 1972 calendar year, water was used for irrigation of 99,484 acres divided as follows: North and South Gila Valleys, 16,240 acres; Yuma Mesa Division, 17,697 acres; Wellton-Mohawk Division, 62,351 acres; Yuma Mesa Auxiliary Division, 3,196 acres. Records of water temperatures for the current water year are published in Part 2 of this report.

DISCHARGE, IN CUBIC FEET PER SECOND, WATER YEAR OCTOBER 1972 TO SEPTEMBER 1973

DAY	OCT	NOV	DEC	JAN	FEB	MAR	APR	MAY	JUN	JUL	AUG	SEP
1	677	960	95	485	1,070	721	965	1,830	1,710	1,540	2,000	1,910
2	1,230	708	327	809	989	774	787	1,960	1,260	1,770	2,040	1,630
3	1,310	917	595	864	774	368	1,120	1,980	1,020	1,950	2,000	1,660
4	1,380	492	1,250	909	730	628	1,360	1,790	1,440	1,930	1,910	1,870
5	1,350	441	1,390	632	1,340	1,160	1,980	1,420	1,710	1,940	1,520	1,880
6	626	779	1,380	460	1,190	1,240	1,810	1,270	1,750	1,980	1,900	1,870
7	116	864	1,330	355	1,230	1,360	1,840	1,750	1,950	1,730	1,620	1,710
8	47	979	837	715	1,150	1,510	1,330	2,150	1,980	1,420	1,760	1,530
9	172	943	620	774	1,190	845	1,630	1,990	1,860	1,890	1,780	1,370
10	119	1,080	671	763	758	490	1,520	2,000	1,320	1,990	1,840	1,820
11	173	567	885	795	551	333	1,630	1,840	1,830	2,130	1,850	1,920
12	261	624	1,060	473	984	303	1,680	1,560	1,880	2,150	1,610	1,980
13	158	907	830	410	1,040	472	1,660	1,260	1,940	2,110	1,860	1,910
14	146	763	790	279	888	339	1,270	1,980	1,670	1,620	2,080	1,900
15	111	876	578	540	993	231	1,160	2,160	1,610	1,400	2,070	1,570
16	404	948	297	614	702	170	1,680	2,050	1,310	1,800	2,080	1,400
17	458	756	206	588	551	235	1,830	2,060	1,080	1,830	1,980	1,670
18	584	593	866	704	470	300	1,840	1,820	1,490	1,750	2,040	1,770
19	321	526	779	537	603	533	1,770	1,560	1,660	1,790	1,530	1,900
20	202	1,010	837	671	779	840	1,310	1,300	1,710	1,820	1,010	1,640
21	79	950	558	426	546	984	1,090	1,750	1,890	1,860	1,070	1,520
22	107	492	567	650	461	900	831	1,760	1,850	1,700	1,190	1,200
23	419	42	239	809	237	1,010	1,750	1,930	1,770	2,120	1,330	690
24	377	0	96	732	237	912	1,690	1,760	1,490	2,190	1,330	957
25	434	0	8.4	654	234	725	1,830	1,590	1,750	2,200	1,290	1,260
26	544	0	548	548	549	1,360	1,670	1,380	1,920	2,200	1,220	1,360
27	507	0	648	409	603	1,470	1,550	1,040	1,940	2,130	1,770	1,460
28	288	0	584	489	555	1,490	1,620	1,600	1,840	2,100	1,900	1,300
29	237	0	614	917	------	1,750	1,290	1,560	1,890	1,730	1,860	921
30	786	0	588	1,170	------	1,730	1,710	1,870	1,890	1,970	1,920	783
31	955	------	369	1,090	------	1,430	------	1,710	------	2,040	1,920	------
TOTAL	14,578	17,217	20,442.4	20,271	21,404	26,613	45,203	53,680	50,410	58,780	53,280	46,361
MEAN	470	574	659	654	764	858	1,507	1,732	1,680	1,896	1,719	1,545
MAX	1,380	1,080	1,390	1,170	1,340	1,750	1,980	2,160	1,980	2,200	2,080	1,980
MIN	47	0	8.4	279	234	170	787	1,040	1,020	1,400	1,010	690
AC-FT	28,920	34,150	40,550	40,210	42,450	52,790	89,660	106,500	99,990	116,600	105,700	91,960

CAL YR 1972 TOTAL 440,945.4 MEAN 1,205 MAX 2,220 MIN 0 AC-FT 874,600
WTR YR 1973 TOTAL 428,239.4 MEAN 1,173 MAX 2,200 MIN 0 AC-FT 849,400

09523000 ALL-AMERICAN CANAL NEAR IMPERIAL DAM, ARIZ.-CALIF.

LOCATION.--Lat 32°52'17", long 114°28'47", in SE¼NW¼ sec.17, T.15 S., R.24 E., San Bernardino meridian, in California, Imperial County, on left bank 6,000 ft downstream from intake at west end of Imperial Dam, and 13.7 miles upstream from turnout to Yuma Main Canal.

PERIOD OF RECORD.--October 1938 to current year. Prior to October 1939 monthly discharge only, published in WSP 1313.

GAGE.--Water-stage recorder. Datum of gage is 150.00 ft above mean sea level (subject to undetermined changes caused by earthquake of May 18, 1940). Since Aug. 21, 1952, auxiliary water-stage recorder 18.5 miles downstream from base gage.

AVERAGE DISCHARGE.--32 years (1941-73), 6,955 cfs (5,039,000 acre-ft per year).

EXTREMES.--Period of record: Maximum daily discharge, 13,500 cfs Apr. 16, 1938; no flow at times.

REMARKS.--Records excellent. All-American Canal diverts water from Colorado River at Imperial Dam. Water is used for power development and for irrigation in Yuma, Coachella, and Imperial Valleys. Water can be released back to the river through Pilot Knob powerplant and wasteway for power, regulatory purposes, or for downstream use in Mexico. First diversion to All-American Canal began October 1938, but prior to October 1940 was used only for priming canal.

COOPERATION.--Gage-height record furnished by Imperial Irrigation District.

DISCHARGE, IN CUBIC FEET PER SECOND, WATER YEAR OCTOBER 1972 TO SEPTEMBER 1973

DAY	OCT	NOV	DEC	JAN	FEB	MAR	APR	MAY	JUN	JUL	AUG	SEP
1	6,070	4,140	3,840	5,180	4,930	5,520	8,930	8,120	6,390	7,190	8,850	7,200
2	6,470	4,230	3,950	5,710	5,110	6,050	8,910	8,110	6,210	7,830	8,570	7,110
3	6,530	4,130	3,420	5,920	4,800	6,420	9,020	7,890	5,990	8,280	8,270	6,840
4	6,620	4,250	3,830	6,180	4,500	6,400	9,330	7,640	6,080	8,700	8,200	6,920
5	6,380	4,100	3,970	5,660	4,760	6,570	9,630	8,240	6,050	8,730	7,750	6,990
6	4,070	4,470	4,270	6,030	4,970	6,460	9,390	7,770	6,360	8,250	7,700	7,260
7	3,810	4,730	5,220	5,630	5,020	7,040	9,420	7,820	6,800	8,030	7,650	7,130
8	4,200	4,760	5,290	5,780	5,240	7,750	9,450	7,890	6,740	8,000	7,840	7,210
9	3,370	4,840	5,090	5,490	4,810	7,570	9,570	7,800	6,840	7,980	8,210	7,100
10	3,490	4,550	5,200	5,910	4,850	7,290	9,620	7,670	6,830	8,250	8,010	7,120
11	3,260	4,710	5,440	6,080	4,550	7,190	9,680	7,520	6,820	8,230	8,250	7,260
12	3,540	4,530	5,460	5,490	4,070	7,330	9,650	7,000	7,170	7,940	8,290	7,420
13	2,940	4,310	5,460	4,580	4,250	6,960	9,470	7,020	7,420	7,380	8,540	7,380
14	2,850	4,170	5,620	3,800	3,820	6,250	9,540	7,150	7,310	7,380	8,440	7,330
15	2,900	4,260	4,830	3,980	4,370	5,790	9,230	7,230	6,980	7,380	7,500	7,500
16	2,770	3,760	4,850	3,800	4,330	6,170	9,180	7,150	6,810	8,370	7,490	7,300
17	3,340	2,440	4,850	3,670	4,300	6,140	9,180	7,200	6,650	8,780	7,880	7,300
18	2,310	2,920	4,870	4,410	3,970	6,350	9,270	6,770	6,460	8,860	7,800	7,460
19	2,070	2,290	4,950	4,040	4,290	6,850	9,600	6,780	6,510	8,790	7,520	7,650
20	2,000	2,540	4,920	4,210	4,910	7,570	9,350	6,820	6,570	8,370	7,760	7,720
21	2,630	2,670	5,110	4,080	4,930	7,850	9,250	7,060	7,080	8,210	7,410	7,560
22	2,470	2,540	4,840	4,340	4,100	8,460	9,290	7,250	7,050	8,130	7,350	7,560
23	2,640	2,320	4,120	4,370	3,530	8,400	9,060	7,580	7,310	8,310	7,710	7,310
24	2,560	2,540	3,000	4,350	3,660	8,540	9,420	7,410	6,940	8,250	7,390	7,460
25	2,860	2,560	2,450	4,480	3,520	8,750	9,480	6,960	7,340	8,320	6,840	7,500
26	3,020	2,520	3,600	4,720	3,730	8,880	9,330	6,720	7,450	8,370	6,930	7,510
27	3,100	2,960	4,080	4,760	4,130	9,010	9,270	6,590	7,520	8,440	6,920	7,590
28	3,400	3,250	4,750	4,550	4,890	9,400	9,120	6,900	7,370	8,460	7,150	7,480
29	3,720	3,510	5,040	4,840	------	9,450	8,390	6,830	7,070	8,200	7,590	7,490
30	4,290	4,050	5,150	4,980	------	9,360	8,260	6,980	7,340	8,410	7,420	7,230
31	4,320	------	4,690	5,260	------	9,300	------	6,850	------	8,670	7,000	------
TOTAL	114,000	109,050	142,160	152,280	124,340	231,070	278,290	226,720	205,460	254,490	240,230	219,890
MEAN	3,677	3,635	4,586	4,912	4,441	7,454	9,276	7,314	6,849	8,209	7,749	7,330
MAX	6,620	4,840	5,620	6,180	5,240	9,450	9,680	8,240	7,520	8,860	8,850	7,720
MIN	2,000	2,290	2,450	3,670	3,520	5,520	8,260	6,590	5,990	7,190	6,840	6,840
AC-FT	226,100	216,300	282,000	302,000	246,600	458,300	552,000	449,700	407,500	504,800	476,500	436,200

CAL YR 1972 TOTAL 2,354,680 MEAN 6,434 MAX 9,850 MIN 2,000 AC-FT 4,671,000
WTR YR 1973 TOTAL 2,297,980 MEAN 6,296 MAX 9,680 MIN 2,000 AC-FT 4,558,000

09527000 PILOT KNOB POWERPLANT AND WASTEWAY NEAR PILOT KNOB, CALIF.

LOCATION.--Lat 32°44'15", long 114°42'56", in NW¼SW¼ sec.25, T.16 S., R.21 E., San Bernardino meridian, Imperial County, 2 miles east of summit of Pilot Knob, 6 miles west of Yuma, Ariz., and 20.8 miles downstream from intake of All-American Canal at Imperial Dam.

PERIOD OF RECORD.--February 1939 to current year. Prior to October 1943 monthly discharge only, published in WSP 1313. Prior to October 1956, published as Pilot Knob wasteway near Pilot Knob.

GAGE.--Totalizing flowmeter on each turbine. In addition, water-stage recorder in forebay on right bank of All-American Canal (also used as auxiliary gage for sta 09527500); tailrace gage with remote recorder logged hourly in control house; calibrated wicket gates for turbine flow and calibrated bypass gates for wasteway flow which are logged for each change. Datum of forebay nonrecording gage is 150.00 ft; that of tailrace nonrecording gage is 0.00 ft; elevation of sill of bypass gates is 147.88 ft above mean sea level.

EXTREMES.--Period of record: Maximum daily discharge, 8,350 cfs Jan. 26, 1958; no flow for long periods.

REMARKS.--Records excellent except those for Aug. 15-17, which are good. Daily discharge computed from flowmeter equipment or from head and gate openings on wicket gates. Records show water released through Pilot Knob powerplant and wasteway from All-American Canal and returned to Colorado River through Rockwood gates. Pilot Knob wasteway completed in summer of 1938 and first flow occurred Feb. 5, 1939. Pilot Knob powerplant was completed in January 1957 and first flow occurred Jan. 14, 1957. See table below for monthly return flow by Pilot Knob wasteway only.

COOPERATION.--Midnight readings of flowmeter, recorder graph of forebay, and record of tailrace elevation and gate openings furnished by Imperial Irrigation District.

DISCHARGE, IN CUBIC FEET PER SECOND, WATER YEAR OCTOBER 1972 TO SEPTEMBER 1973

DAY	OCT	NOV	DEC	JAN	FEB	MAR	APR	MAY	JUN	JUL	AUG	SEP
1	0		0	1,420	0	1,470	2,040			908	1,530	
2	0		0	1,660	0	1,630	1,940			1,350	1,540	
3	0		0	1,660	0	1,790	2,070			1,370	1,560	
4	0		0	1,710	0	1,800	2,120			1,380	1,580	
5	0		0	1,760	0	1,810	1,990			1,460	1,480	
6	5.0		0	1,680	0	1,890	1,740			1,380	1,420	
7	1,690		28	1,350	0	1,940	2,000			1,420	1,470	
8	1,910		978	1,520	0	1,880	2,140			1,430	1,540	
9	429		1,050	1,520	0	1,890	2,080			1,440	1,570	
10	0		1,030	1,530	0	1,900	2,050			1,440	1,580	
11	0		980	1,520	0	1,900	2,120			1,410	1,520	
12	0		952	1,560	0	1,740	2,350			1,210	1,550	
13	0		950	1,410	0	1,950	2,100			1,210	1,550	
14	0		951	1,400	36	1,950	2,130			1,220	1,430	
15	0		951	1,430	932	1,470	2,090			1,410	590	
16	0		992	1,160	950	1,860	2,090			1,720	275	
17	0		963	963	1,170	1,870	1,910			1,750	1,030	
18	0		956	911	1,080	1,900	1,800			1,720	1,210	
19	0		1,070	0	1,140	2,050	1,640			1,720	1,190	
20	0		1,040	0	1,160	2,230	1,560			1,410	1,400	
21	0		957	0	1,160	2,220	1,680			1,460	1,370	
22	0		950	0	1,120	2,180	1,750			1,600	1,240	
23	0		951	0	1,100	2,110	1,720			1,600	1,040	
24	0		950	0	1,000	2,080	1,700			1,640	1,030	
25	0		950	0	1,000	2,100	1,710			1,750	1,050	
26	0		950	0	999	2,120	1,710			1,690	1,300	
27	0		949	0	1,000	2,120	1,440			1,680	1,040	
28	0		952	0	1,150	2,210	1,200			1,700	1,030	
29	0		952	0	------	2,230	0			1,370	1,030	
30	0		1,030	0	------	2,250	17			1,420	0	
31	0	------	1,060	0	------	2,190	------		------	1,690	0	------
TOTAL	4,034.0	0	23,542	26,164	14,997	60,730	52,887	0	0	45,958	37,145	0
MEAN	130	0	759	844	536	1,959	1,763	0	0	1,483	1,198	0
MAX	1,910	0	1,070	1,760	1,170	2,250	2,350	0	0	1,750	1,580	0
MIN	0	0	0	0	0	1,470	0	0	0	908	0	0
AC-FT	8,000	0	46,700	51,900	29,750	120,500	104,900	0	0	91,160	73,680	0

CAL YR 1972 TOTAL 344,227.0 MEAN 941 MAX 2,440 MIN 0 AC-FT 682,800
WTR YR 1973 TOTAL 265,457.0 MEAN 727 MAX 2,350 MIN 0 AC-FT 526,500

09527500 ALL-AMERICAN CANAL BELOW PILOT KNOB WASTEWAY, CALIF.

LOCATION.--Lat 32°44'07", long 114°43'23", in NW¼SE¼ sec.26, T.16 S., R.21 E., San Bernardino meridian, Imperial County, on left bank 0.4 mile downstream from Pilot Knob wasteway, 6 miles west of Yuma, Ariz., 15 miles upstream from turnout to Coachella Canal, and 21.2 miles downstream from intake at Imperial Dam.

PERIOD OF RECORD.--October 1961 to current year.

GAGE.--Water-stage recorder. Datum of gage is 150.00 ft above mean sea level. Auxiliary water-stage recorder on right bank 0.4 mile upstream used to determine head on Pilot Knob check gates (also used as forebay gage for sta 09527000, Pilot Knob powerplant and wasteway). Datum of auxiliary gage is 150.00 ft above mean sea level.

AVERAGE DISCHARGE.--12 years, 4,670 cfs (3,383,000 acre-ft per year).

EXTREMES.--Period of record: Maximum daily discharge, 7,220 cfs July 12, 1963; no flow Jan. 4, 1967.

REMARKS.--Records excellent. Water is used for power development at three sites below station and for irrigation in Coachella and Imperial Valleys.

COOPERATION.--Gage-height record and log of gate operation furnished by Imperial Irrigation District.

DISCHARGE, IN CUBIC FEET PER SECOND, WATER YEAR OCTOBER 1972 TO SEPTEMBER 1973

DAY	OCT	NOV	DEC	JAN	FEB	MAR	APR	MAY	JUN	JUL	AUG	SEP
1	5,300	3,540	3,330	3,560	3,890	3,240	6,190	6,510	5,420	5,540	6,260	5,610
2	5,560	3,600	3,570	3,780	4,010	3,600	6,350	6,450	5,310	5,670	5,930	5,680
3	5,620	3,580	3,260	3,910	3,880	3,850	6,290	6,300	5,380	5,810	5,700	5,430
4	5,720	3,660	3,510	4,180	3,810	3,900	6,470	6,090	5,410	6,130	5,680	5,420
5	5,600	3,610	3,700	3,710	3,980	4,190	6,550	6,490	5,390	6,100	5,750	5,420
6	3,590	3,720	3,830	4,150	4,040	4,050	6,590	6,570	5,590	5,840	5,620	5,600
7	1,950	3,980	4,070	4,080	4,020	4,420	6,440	6,560	5,760	5,720	5,510	5,520
8	2,100	3,980	3,710	3,940	4,000	4,960	6,480	6,620	5,670	5,760	5,620	5,650
9	2,560	4,090	3,630	3,600	3,560	5,130	6,480	6,530	5,720	5,660	5,650	5,580
10	3,020	3,880	3,880	3,920	3,580	4,990	6,510	6,390	5,800	5,820	5,540	5,650
11	2,920	4,050	3,930	4,200	3,290	4,940	6,460	6,260	5,700	5,830	5,720	5,810
12	3,260	3,920	3,950	3,660	2,860	5,270	6,310	5,890	5,780	5,820	5,750	5,920
13	2,760	3,720	4,120	2,880	2,910	4,560	6,370	5,960	5,720	5,350	5,900	6,000
14	2,730	3,550	4,350	2,180	2,610	3,850	6,460	6,060	5,500	5,350	5,970	5,980
15	2,730	3,620	3,700	2,190	2,830	3,820	6,500	6,020	5,290	5,640	5,900	5,980
16	2,520	3,190	3,590	2,190	2,810	3,820	6,510	5,990	5,240	5,790	6,090	5,770
17	2,990	2,020	3,600	2,210	2,730	3,760	6,570	6,130	5,240	6,060	5,830	5,800
18	2,030	2,620	3,530	2,880	2,590	4,060	6,560	5,860	5,160	6,100	5,670	5,980
19	1,780	2,050	3,420	2,900	2,780	4,370	6,770	5,870	5,280	6,040	5,660	6,160
20	1,740	2,250	3,420	3,400	3,270	4,710	6,650	6,000	5,310	5,970	5,680	6,200
21	2,350	2,280	3,690	3,410	3,320	4,950	6,490	6,060	5,670	5,830	5,490	6,010
22	2,300	2,230	3,520	3,610	2,590	5,310	6,590	6,270	5,680	5,760	5,410	6,010
23	2,410	2,110	2,850	3,620	1,980	5,360	6,370	6,400	5,990	5,860	5,650	5,830
24	2,410	2,280	1,890	3,690	2,220	5,590	6,570	6,280	5,890	5,660	5,360	5,850
25	2,640	2,240	1,510	3,740	2,190	5,890	6,590	5,980	6,040	5,600	4,900	5,780
26	2,790	2,200	2,310	3,830	2,200	5,920	6,440	5,850	6,040	5,710	4,870	5,800
27	2,880	2,510	2,600	3,900	2,440	5,900	6,670	5,820	6,090	5,810	4,960	5,880
28	3,130	2,620	3,020	3,660	2,870	6,110	6,650	5,980	5,770	5,890	5,080	5,900
29	3,430	2,830	3,420	3,750	------	6,220	6,510	5,870	5,390	5,960	5,280	5,860
30	3,780	3,330	3,510	3,800	------	6,190	6,530	5,920	5,830	5,990	5,510	5,730
31	3,730	------	3,190	4,090	------	6,270	------	5,800	------	6,010	5,490	------
TOTAL	98,330	93,260	105,610	108,620	87,260	149,200	194,920	190,780	168,060	180,080	173,430	173,810
MEAN	3,172	3,109	3,407	3,504	3,116	4,813	6,497	6,154	5,602	5,809	5,595	5,794
MAX	5,720	4,090	4,350	4,200	4,040	6,270	6,770	6,620	6,090	6,130	6,260	6,200
MIN	1,740	2,020	1,510	2,180	1,980	3,240	6,190	5,800	5,160	5,350	4,870	5,420
AC-FT	195,000	185,000	209,500	215,400	173,100	295,900	386,600	378,400	333,300	357,200	344,000	344,800

CAL YR 1972 TOTAL 1,717,530 MEAN 4,693 MAX 6,430 MIN 1,510 AC-FT 3,407,000
WTR YR 1973 TOTAL 1,723,360 MEAN 4,722 MAX 6,770 MIN 1,510 AC-FT 3,418,000

Return surface flows below Imperial Dam, Ariz.-Calif.

Between Imperial Dam and the international boundary return surface flows from irrigated areas enter the Colorado River through many drains and wasteways in Arizona and California. Other return flows enter the Gila River below the gaging station near Dome (09520500). In addition, return flows collected by the Main Drain and East Main Canal are delivered across the international boundary for use in Mexico.

Diversions for irrigation in the Gila Project in Arizona are made at Imperial Dam by the Gila Gravity Main Canal. (See sta 09522500.) Diversions for the Yuma Project in Arizona and California are made at Imperial Dam by the All-American Canal (see sta 09523000)

See figure 2 for a schematic diagram showing location of diversions and return flows.

09527000. PILOT KNOB POWERPLANT AND WASTEWAY.--See daily table elsewhere in this report.

09528600. LAGUNA CANAL WASTEWAY.
LOCATION.--Water-stage recorder and sharp-crested weir, in SE¼SW¼ sec.14, T.7 S., R.22 W., 1,000 ft (300 m) downstream from Laguna Dam and 0.7 mi (1.1 km) upstream from outlet to Colorado River.

PERIOD OF RECORD.--Monthly discharge October 1960 to current year.

REMARKS.--Record shows waste water from North Gila Valley Irrigation District returned to Colorado River. Flow record computed from standard weir rating.

09528800. LEVEE CANAL WASTEWAY.
LOCATION.--Water-stage recorder and sharp-crested weir, in SE¼SW¼ sec.4, T.8 S., R.22 W., 1,000 ft (300 m) upstream from outlet to Colorado River.

PERIOD OF RECORD.--Monthly discharge October 1960 to current year.

REMARKS.--Record shows waste water from North Gila Valley Irrigation District returned to Colorado River.

09529000. NORTH GILA DRAIN NO. 1.
LOCATION.--Enters Colorado River in NE¼NW¼ sec.9, T.8 S., R.22 W., 5.6 mi (9.0 km) downstream from Laguna Dam.

PERIOD OF RECORD.--Monthly discharge October 1960 to current year.

REMARKS.--Record shows waste water from North Gila Valley Irrigation District returned to Colorado River. There is no gage, but, due to fairly constant drainage, flow record is computed by interpolation between discharge measurements made monthly.

09529050. NORTH GILA DRAIN NO. 3.
LOCATION.--Drain enters wasteway to Gila River in NE¼NE¼ sec.18, T.8 S., R.21 W., 1,000 ft (300 m) upstream from Gila River.

PERIOD OF RECORD.--Monthly discharge April 1962 to current year.

REMARKS.--Record shows seepage from Gila Gravity Main Canal. There is no gage; records are computed by interpolation between discharge measurements made monthly.

09529100. FORTUNA WASTEWAY.
LOCATION.--Water-stage recorder and sharp-crested weir, in NE¼ sec.30, T.8 S., R.21 W., 1.3 mi (2.1 km) upstream from Gila River.

PERIOD OF RECORD.--Monthly discharge October 1960 to September 1963, October 1964 to current year.

REMARKS.--Record shows waste water spilled from Gila Gravity Main Canal; flow rarely reaches Gila River.

09529150. NORTH GILA MAIN CANAL WASTEWAY.
LOCATION.--Water-stage recorder in NE¼NW¼ sec.22, T.8 S., R.22 W., 1,000 ft (300 m) upstream from outlet to Gila River. Prior to July 1966 water-stage recorder and sharp-crested weir, 1 mi (1.6 km) upstream from outlet to Gila River.

PERIOD OF RECORD.--Monthly discharge October 1960 to current year.

REMARKS.--Record shows waste water from North Gila Valley Irrigation District. Prior to July 1966 record shows waste water less flow diverted for irrigation between gage and Gila River.

09529160. SOUTH GILA PUMP OUTLET CHANNEL NO. 3.
LOCATION.--Water-stage recorder in NW¼SE¼ sec.22, T.8 S., R.22 W., 0.5 mi (0.8 km) upstream from outlet to Gila River. Prior to Aug. 1, 1965, record obtained by Badger total-flow meter about 500 ft (150 m) downstream.

PERIOD OF RECORD.--Monthly discharge January 1965 to current year.

REMARKS.--Record shows water pumped from wells in South Gila Valley Unit.

09529200. BRUCE CHURCH DRAIN.
LOCATION.--Pump in NW¼NE¼ sec.21, T.8 S., R.22 W., 0.2 mi (0.3 km) upstream from outlet to Gila River.

PERIOD OF RECORD.--Monthly discharge April 1962 to current year.

REMARKS.--Record shows seepage water from parts of secs.15, 16, and 21 (Bruce Church Ranch). Flow computed by interpolation between discharge measurements; prior to Nov. 30, 1970, flow determined from pump rating.

Return surface flows below Imperial Dam, Ariz.-Calif.--Continued

09529240. SOUTH GILA PUMP OUTLET CHANNEL NO. 2.
LOCATION.--Water-stage recorder in NW¼SW¼ sec.28, T.8 S., R.22 W., 0.6 mi (1.0 km) upstream from outlet to Gila River; prior to Oct. 18, 1965, outlet was to Wellton-Mohawk Main Outlet Drain. Prior to Aug. 1, 1965, Sparling meter at outlet to Wellton-Mohawk Main Outlet Drain.

PERIOD OF RECORD.--Monthly discharge January 1962 to current year.

REMARKS.--Record shows water pumped from wells in South Gila Valley Unit and conveyed by concrete channel to the Gila River.

09529250. BRUCE CHURCH WASTEWAY.
LOCATION.--Water-stage recorder and sharp-crested weir, in SE¼SE¼ sec.20, T.8 S., R.22 W., 500 ft (150 m) upstream from outlet to Gila River.

PERIOD OF RECORD.--Monthly discharge October 1960 to current year.

REMARKS.--Record shows waste water from North Gila Valley Irrigation District returned to Gila River.

09529300. WELLTON-MOHAWK MAIN OUTLET DRAIN (CONVEYANCE CHANNEL).
LOCATION.--Water-stage recorder in NW¼NE¼ sec.17, T.8 S., R.21 W., 8 mi (13 km) upstream from outlet to Gila River (M.O.D.E. 1), which is 0.6 mi (1.0 km) upstream from mouth of Gila River. Prior to Feb. 20, 1962, gage heights measured from reference point on measuring bridge.

PERIOD OF RECORD.--Monthly discharge October 1960 to current year.

REMARKS.--Record shows water pumped from numerous wells in Wellton-Mohawk Irrigation and Drainage District to lower the water table. Drainage is conveyed by concrete and earth channels to Gila River or Colorado River. (See stas 09529350, 09531800, and 09531900.)

09529350. MAIN OUTLET DRAIN ABOVE GILA RIVER.
LOCATION.--Water-stage recorder in NE¼NE¼ sec.30, T.8 S., R.22 W., about 1,000 ft (300 m) upstream from outlet to Gila River (M.O.D.E. 1), which is 0.6 mi (1.0 km) upstream from mouth of Gila River, and 8 mi (13 km) downstream from sta 09529300.

PERIOD OF RECORD.--Monthly discharge October 1965 to current year.

REMARKS.--Record shows water pumped from numerous drainage wells in Wellton-Mohawk Irrigation and Drainage District. Above this station flow passes through 8 mi (13 km) of unlined channel. Since completion of the Main Outlet Drain Extension on Nov. 15, 1965, flow can be returned to the Gila River or Colorado River by any one of, or combination of, three outlets. These outlets are known as: M.O.D.E. 1 (release to the Gila River about 1,000 ft (300 m) below sta 09529350); M.O.D.E. 2 (see sta 09531800), release to Colorado River above Morelos Dam; and M.O.D.E. 3 (see sta 09531900), release to Colorado River below Morelos Dam. For the 1973 water year water was released to Gila River through M.O.D.E. 1 on only 5 days in June and to Colorado River through M.O.D.E. 2 on only 1 day in July; total amount released was 38 acre-ft (46,900 m^3).

09529360. SOUTH GILA PUMP OUTLET CHANNEL NO. 1.
LOCATION.--Water-stage recorder in SW¼NE¼ sec.30, T.8 S., R.22 W., 0.2 mi (0.3 km) upstream from outlet to Gila River, which is 0.6 mi (1.0 km) upstream from mouth of Gila River. Prior to Aug. 1, 1965, Sparling flowmeter 300 feet (90 m) upstream.

PERIOD OF RECORD.--Monthly discharge August 1961 to current year.

REMARKS.--Record shows water pumped from wells in South Gila Valley Unit and conveyed by concrete channel to Gila River.

09529400. SOUTH GILA DRAIN NO. 2.
LOCATION.--Near center of sec.24, T.8 S., R.23 W., at outlet to Colorado River. Prior to Oct. 1, 1969, Sparling flowmeter at same site.

PERIOD OF RECORD.--Monthly discharge October 1960 to current year.

REMARKS.--Record shows ground-water drainage and occasional waste water from South Gila Valley Unit returned to Colorado River. There is no gage; flow record computed by interpolation between discharge measurements made monthly.

09529420. SOUTH GILA TERMINAL WASTEWAY.
LOCATION.--Water-stage recorder and Parshall flume in SW¼NW¼ sec.36, T.8 S., R.23 W., 2.0 mi (3.2 km) upstream from outlet to Colorado River. Prior to Aug. 1, 1965, total-flow meter at same site.

PERIOD OF RECORD.--Monthly discharge March 1965 to current year.

REMARKS.--Record shows waste water from South Gila Canal of South Gila Valley Unit returned to Colorado River.

09529440. SOUTH GILA PUMP OUTLET CHANNEL NO. 4.
LOCATION.--Water-stage recorder and broad-crested weir, in NW¼NW¼ sec.26, T.8 S., R.23 W., 1.5 mi (2.4 km) upstream from outlet to Colorado River.

PERIOD OF RECORD.--Monthly discharge July 1965 to current year.

REMARKS.--Record shows water pumped from wells in South Gila Valley Unit and conveyed by concrete-lined channel to Colorado River.

09529600. RESERVATION DRAIN NO. 7.
LOCATION.--At downstream end of culvert on Avenue C in NE¼NE¼ sec.33, T.15 S., R.23 E., San Bernardino meridian, 0.5 mi (0.8 km) upstream from outlet to Reservation Main Drain. Prior to Oct. 1, 1969, nonrecording gage at same site.

PERIOD OF RECORD.--Monthly discharge March 1966 to current year.

REMARKS.--Record shows drainage water from sec.34, T.15 S., R.23 E., and is used with sta 09529700 to determine seepage from All-American Canal. There is no gage; flow record computed by interpolation between discharge measurements made monthly. Beginning June 20, 1967, Imperial Irrigation District makes discharge measurements weekly.

Return surface flows below Imperial Dam, Ariz.-Calif.--Continued

09529700. RESERVATION MAIN DRAIN NO. 6.
LOCATION.--Nonrecording gage on upstream right piling of 9th Street Bridge, in SE¼SW¼ sec.32, T.15 S., R.23 E., San Bernardino meridian.

PERIOD OF RECORD.--Monthly discharge March 1966 to current year.

REMARKS.--Record shows waste and drainage water from the Reservation Division, and is used with sta 09529600 to determine seepage from All-American Canal, which parallels drain for 4 mi (6.4 km). Flow record computed by interpolation between discharge measurements made monthly. The Imperial Irrigation District makes discharge measurements weekly.

09529800. RESERVATION DRAIN NO. 2.
LOCATION.--At upstream side of bridge in SW¼NW¼ sec.6, T.16 S., R.23 E., San Bernardino meridian, 0.9 mi (1.4 km) upstream from outlet to Reservation Main Drain.

PERIOD OF RECORD.--Monthly discharge March 1966 to current year.

REMARKS.--Record used to compute seepage from All-American Canal in sec.31, T.15 S., R.22 E. There is no gage; flow record computed by interpolation between discharge measurements made monthly. The Imperial Irrigation District makes discharge measurements weekly.

09529900. RESERVATION DRAIN NO. 3.
LOCATION.--Nonrecording gage on pier on right side of 5th Street Bridge in SE¼SE¼ sec.10, T.16 S., R.22 E., San Bernardino meridian, 1.0 mi (1.6 km) upstream from outlet to Reservation Main Drain.

PERIOD OF RECORD.--Monthly discharge March 1966 to current year.

REMARKS.--Record used to compute seepage from All-American Canal upstream from Yuma Main Canal. Flow record computed by interpolation between discharge measurements made monthly. Imperial Irrigation District makes discharge measurements weekly.

09530000. RESERVATION MAIN DRAIN NO. 4.
LOCATION.--Water-stage recorder in NW¼SE¼ sec.26, T.16 S., R.22 E., San Bernardino meridian, at upstream side of railroad culvert. Drainage canal enters Yuma Main Canal wasteway 200 ft (60 m) downstream from spillway structure. Prior to May 1955, it entered 500 ft (150 m) upstream from outlet of Yuma Main Canal wasteway in SE¼SW¼ sec.26, T.16 S., R.22 E., San Bernardino meridian.

PERIOD OF RECORD.--Monthly discharge January 1913 to April 1920, October 1921 to March 1925, January 1934 to current year (calendar year discharge only 1934-36). Prior to October 1955, published as California drainage canal. Prior to January 1937, no gage; 1937 to Apr. 16, 1941, nonrecording gages at same site at different datums.

REMARKS.--Record shows waste and drainage water from area east of Yuma Main Canal on Reservation Division. Since 1939, seepage from All-American Canal has caused large increase. Flow is not included in the record of Yuma Main Canal wasteway.

09530200. YUMA MESA OUTLET DRAIN.
LOCATION.--Venturi meter with recorder in SE¼SW¼ sec.28, T.16 S., R.22 E., San Bernardino meridian, in Arizona, Yuma County, 0.3 mi (0.5 km) from outlet to Colorado River.

PERIOD OF RECORD.--Monthly discharge July 1970 to current year.

REMARKS.--Record shows water pumped from wells on the Yuma Mesa and conveyed by underground conduit to Colorado River.

COOPERATION.--Records furnished by Bureau of Reclamation prior to July 21, 1972.

09530400. RESERVATION DRAIN NO. 11.
LOCATION.--At outlet to Drain 8-B (Araz drain), in NE¼NE¼ sec.19, T.16 S., R.22 E., San Bernardino meridian.

PERIOD OF RECORD.--Monthly discharge March 1966 to current year.

REMARKS.--Record shows drainage from sec.20, T.16 S., R.22 E. Flow at this station, with that at sta 09530500, is used to determine seepage from All-American Canal. There is no gage; flow record computed by interpolation between discharge measurements made monthly. Beginning June 20, 1967, Imperial Irrigation District makes discharge measurements weekly.

09530500. DRAIN 8-B.
LOCATION.--Enters Colorado River in NE¼NW¼ sec.30, T.16 S., R.22 E., San Bernardino meridian, 4 mi (6.4 km) downstream from outlet of Yuma Main Canal wasteway.

PERIOD OF RECORD.--Monthly discharge March 1948 to current year. Prior to October 1955, published as Araz drain.

REMARKS.--Record shows seepage from All-American Canal, and waste and drainage water west of Yuma Main Canal on the Reservation Division. Flow at this station, with that at sta 09530400, is used to determine seepage from All-American Canal. There is no gage, but due to fairly constant drainage, flow record is computed by interpolation between discharge measurements made monthly. Imperial Irrigation District makes discharge measurements weekly at site 1,000 ft (300 m) upstream.

09531800. MAIN OUTLET DRAIN EXTENSION ABOVE MORELOS DAM (M.O.D.E. 2).
LOCATION.--Water-stage recorder and Parshall flume in NW¼NW¼ sec.36, T.16 S., R.21 E., San Bernardino meridian, at outlet to Colorado River, 1.7 mi (2.7 km) upstream from Morelos Dam.

PERIOD OF RECORD.--Monthly discharge November 1965 to current year.

REMARKS.--Record shows water conveyed to Colorado River 1.7 mi (2.7 km) above Morelos Dam, from numerous drainage wells in Wellton-Mohawk Irrigation and Drainage District. (See also stas 09529300, 09529350, 09531900.)

Return surface flows below Imperial Dam, Ariz.-Calif.--Continued

09531850. COOPER WASTEWAY.
LOCATION.--Water-stage recorder and weir, in NE¼NE¼ sec.28, T.8 S., R.24 W., 0.6 mi (1.0 km) upstream from Morelos Dam. Prior to July 14, 1971, at site 1 mi (1.6 km) downstream.

PERIOD OF RECORD.--Monthly discharge January 1934 to current year.

REMARKS.--Record shows waste water from Valley Division returned to Colorado River.

COOPERATION.--Record furnished by International Boundary and Water Commission (U.S. Section).

09531900. MAIN OUTLET DRAIN EXTENSION BELOW MORELOS DAM (M.O.D.E 3).
LOCATION.--Water-stage recorder and Parshall flume in NW¼SE¼ sec.28, T.8 S., R.24 W., at outlet to Colorado River just downstream from Morelos Dam.

PERIOD OF RECORD.--Monthly discharge November 1965 to current year.

REMARKS.--Record shows water conveyed to Colorado River below Morelos Dam, from numerous drainage wells in Wellton-Mohawk Irrigation and Drainage District. (See also stas 09529300, 09529350, 09531800.)

COOPERATION.--Record furnished by International Boundary and Water Commission (U.S. Section).

09532500. ELEVEN MILE WASTEWAY.
LOCATION.--Water-stage recorder and regulating gate in SE¼NW¼ sec.8, T.9 S., R.24 W., 3.2 mi (5.1 km) downstream from Morelos Dam.

PERIOD OF RECORD.--Monthly discharge January 1924 to current year.

REMARKS.--Record shows waste water from Valley Division returned to Colorado River.

COOPERATION.--Record furnished by International Boundary and Water Commission (U.S. Section).

09533000. TWENTY-ONE MILE WASTEWAY.
LOCATION.--Water-stage recorder and weir in NE¼NW¼ sec.35, T.10 S., R.25 W., 0.6 mi (1.0 km) upstream from outlet to Colorado River, which is 2.4 mi (3.9 km) upstream from southerly international boundary and 2.6 mi (4.2 km) northwest of San Luis, Ariz. Prior to May 1, 1971, water-stage recorder and Parshall flume at site 200 ft (60 m) upstream.

PERIOD OF RECORD.--Monthly discharge March 1939 to current year.

REMARKS.--Record shows waste water from Valley Division returned to Colorado River.

COOPERATION.--Record furnished by International Boundary and Water Commission (U.S. Section).

09534000. MAIN DRAIN.
LOCATION.--Flowmeters in discharge pipes at pumping plant in SE¼NE¼ sec.11, T.11 S., R.25 W., 0.4 mi (0.6 km) west of San Luis, Ariz. Prior to Apr. 1, 1969, rated pumps with forebay and afterbay gages to measure head.

PERIOD OF RECORD.--Monthly discharge January 1919 to current year.

REMARKS.--Record shows flow which consists mostly of drainage water from the Valley Division which is pumped across the Arizona-Sonora boundary for use in Mexico. Flowmeters checked by discharge measurements made by International Boundary and Water Commission (U.S. Section).

COOPERATION.--Record furnished by International Boundary and Water Commission (U.S. Section).

09534300. WEST MAIN CANAL WASTEWAY.
LOCATION.--Water-stage recorder in SE¼NE¼ sec.11, T.11 S., R.25 W., 150 ft (46 m) upstream from outlet to Main drain, which is 175 ft (53 m) upstream from East Main Canal wasteway and 0.4 mi (0.6 km) west of San Luis, Ariz.

PERIOD OF RECORD.--Monthly discharge February 1971 to current year.

REMARKS.--Record shows waste water from Valley Division which is discharged across the Arizona-Sonora boundary for use in Mexico.

COOPERATION.--Record furnished by International Boundary and Water Commission (U.S. Section).

09534500. EAST MAIN CANAL WASTEWAY.
LOCATION.--Water-stage recorder, in NW¼SW¼ sec.12, T.11 S., R.25 W., 0.2 mi (0.3 km) east of Main drain pumping plant and 0.2 mi (0.3 km) west of San Luis, Ariz.

PERIOD OF RECORD.--Monthly discharge January 1924 to June 1928, January 1932 to December 1933, April 1935 to current year. Calendar year estimates 1934 and 1935, published in WSP 1313.

REMARKS.--Record shows amount of unused water at the extreme end of the Valley Division which is discharged across the Arizona-Sonora boundary for use in Mexico.

COOPERATION.--Record furnished by International Boundary and Water Commission (U.S. Section).

Return surface flows below Imperial Dam, Ariz.-Calif.--Continued

MONTHLY RETURN FLOWS, IN ACRE-FEET, WATER YEAR OCTOBER 1972 TO SEPTEMBER 1973

Month	Laguna Canal wasteway 09528600	Levee Canal wasteway 09528800	North Gila Drain No. 1 09529000	North Gila Drain No. 3 09529050	Fortuna wasteway 09529100
October	0	56	383	36	104
November	0	86	262	34	69
December	2.6	72	254	14	72
CAL YR 1972	9.1	1,460	3,730	404	932
January	0	38	185	15	48
February	0	87	200	11	40
March	0	92	191	14	42
April	0	96	188	14	125
May	0	118	306	12	31
June	0	107	434	24	55
July	0	152	516	48	33
August	0	221	581	55	30
September	0	193	557	39	36
WTR YR 1973	2.6	1,320	4,060	316	685

Month	North Gila Main Canal wasteway 09529150	South Gila Pump Outlet Channel No. 3 09529160	Bruce Church Drain 09529200	South Gila Pump Outlet Channel No. 2 09529240	Bruce Church wasteway 09529250
October	62	14	6.1	330	31
November	32	37	2.4	439	14
December	13	532	0	1,760	160
CAL YR 1972	246	12,010	141	18,760	774
January	9.7	656	6.1	1,840	67
February	33	11	49	1,290	74
March	13	1,270	94	2,190	33
April	27	1,800	65	2,100	16
May	0	17	61	472	13
June	0	942	60	943	78
July	0	1,600	24	1,890	44
August	0	4.3	8.5	2.5	33
September	0	6.3	6.0	0	40
WTR YR 1973	191	6,890	382	13,260	602

Month	Wellton-Mohawk Main Outlet Drain 09529300	Main Outlet Drain above Gila River 09529350	South Gila Pump Outlet Channel No. 1 09529360	South Gila Drain No. 2 09529400	South Gila Terminal wasteway 09529420
October	18,390	18,580	1,090	0	104
November	17,890	18,450	1,420	23	32
December	18,230	18,110	2,670	14	29
CAL YR 1972	210,200	207,400	25,850	92	613
January	18,070	17,940	2,750	24	41
February	16,860	16,640	1,880	24	35
March	17,540	17,740	2,750	30	21
April	17,460	17,270	2,410	39	47
May	18,440	18,790	1,670	54	87
June	17,850	18,640	2,720	38	97
July	14,510	13,130	3,000	17	121
August	15,940	1,260	2,650	6.9	94
September	17,860	1,320	3,040	0	99
WTR YR 1973	209,000	177,900	28,060	270	807

NOTE.--Yearly totals given above have been computed from total cfs-days and may differ slightly from the summation of monthly total acre-feet on occasion.

Return surface flows below Imperial Dam, Ariz.-Calif.--Continued

MONTHLY RETURN FLOWS, IN ACRE-FEET, WATER YEAR OCTOBER 1972 TO SEPTEMBER 1973

Month	South Gila Pump Outlet Channel No. 4 09529440	Reservation Drain No. 7 09529600	Reservation Main Drain No. 6 09529700	Reservation Drain No. 2 09529800	Reservation Drain No. 3 09529900	Reservation Main Drain No. 4 09530000
October	6.0	67	1,040	18	240	3,140
November	.06	61	950	14	228	3,060
December	0	65	875	18	218	2,840
CAL YR 1972	4,970	947	11,290	295	2,840	37,640
January	.3	58	783	14	200	2,760
February	716	53	674	5.6	184	2,550
March	488	71	829	11	241	2,940
April	3.6	77	976	12	282	3,190
May	1.1	87	1,110	12	265	3,470
June	131	82	960	7.9	226	2,980
July	413	80	992	11	244	3,290
August	1,260	102	1,040	12	244	3,270
September	1,170	116	1,110	9.7	282	3,330
WTR YR 1973	4,190	919	11,340	145	2,850	36,820

Month	Yuma Mesa Outlet Drain 09530200	Reservation Drain No. 11 09530400	Drain 8-B 09530500	M.O.D.E. 2 (above Morelos Dam) 09531800	Cooper wasteway 09531850	M.O.D.E. 3 (below Morelos Dam) 09531900
October	3,900	18	151	0	62	18,600
November	5,290	15	120	0	90	17,940
December	5,970	12	103	0	93	18,050
CAL YR 1972	32,810	101	1,370	57,870	637	148,400
January	5,840	12	84	0	61	17,910
February	4,340	11	85	0	33	16,720
March	4,990	12	105	0	85	17,850
April	5,120	12	101	0	39	17,380
May	3,650	18	119	0	48	18,770
June	4,250	18	119	0	72	18,760
July	5,510	17	110	8.5	53	16,290
August	4,300	20	158	0	43	18,270
September	4,870	24	196	0	27	18,010
WTR YR 1973	58,040	189	1,450	8.5	706	214,600

Month	Eleven Mile wasteway 09532500	Twenty-one Mile wasteway 09533000	Main Drain 09534000	West Main Canal wasteway 09534300	East Main Canal wasteway 09534500
October	91	23	10,470	728	357
November	19	.8	9,120	498	404
December	298	.6	8,770	518	336
CAL YR 1972	1,490	185	125,000	5,240	3,970
January	28	.4	8,300	506	306
February	171	1.4	7,560	563	302
March	150	2.8	8,550	652	431
April	164	1.0	8,560	639	372
May	19	1.2	9,260	376	451
June	138	0	8,820	410	596
July	42	1.8	9,190	369	537
August	202	0	9,020	236	582
September	15	.8	9,790	190	612
WTR YR 1973	1,340	34	107,400	5,680	5,290

NOTE.--Yearly totals given above have been computed from total cfs-days and may differ slightly from the summation of monthly total acre-feet on occasion.

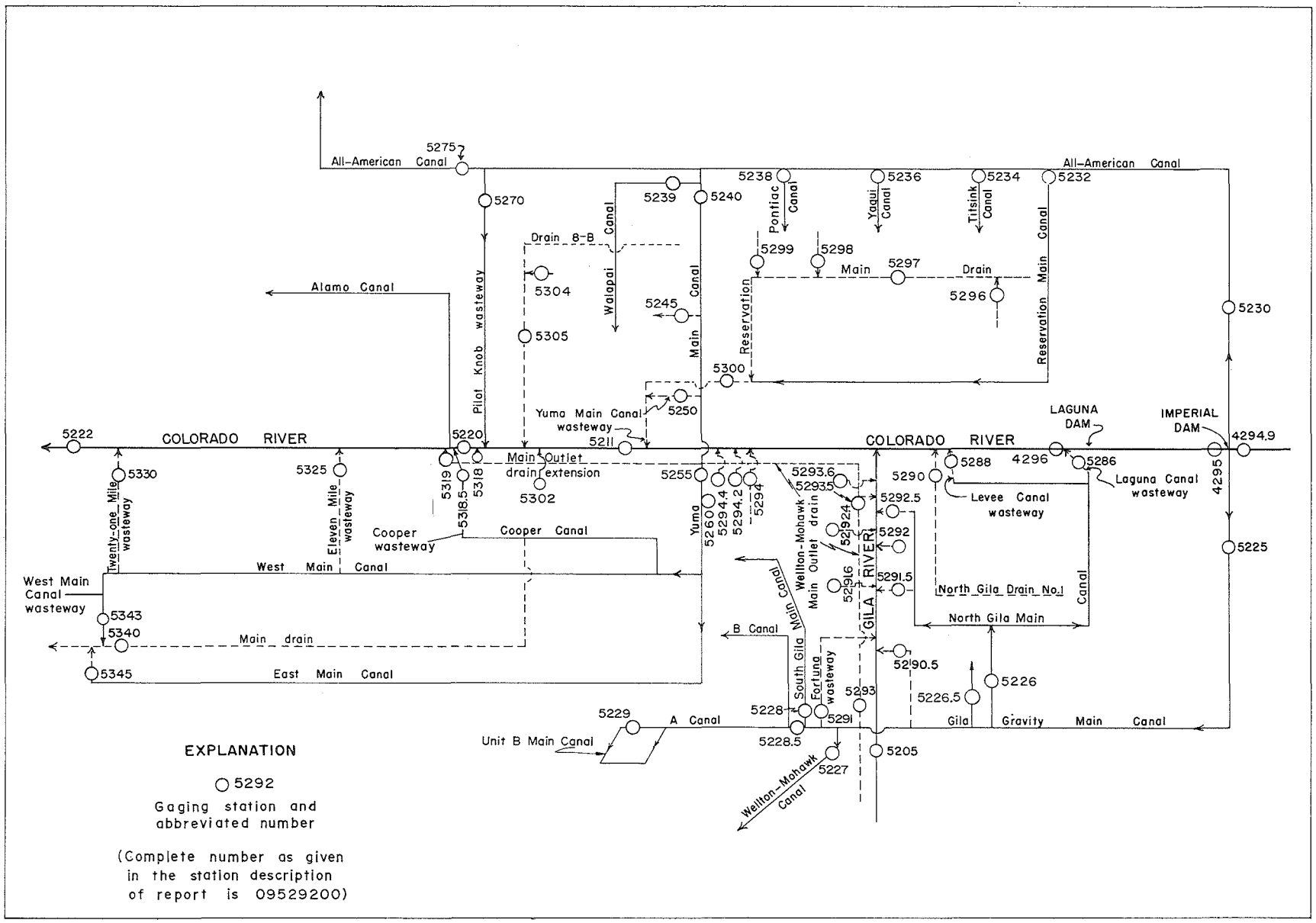

Figure 2.--Schematic diagram showing gaging stations on streams, diversions, and return flows between Imperial Dam and the southerly international boundary

10250600 WILDROSE CREEK NEAR WILDROSE STATION, CALIF.
(Hydrologic bench-mark station)

LOCATION.--Lat 36°15'54", long 117°10'40", (unsurveyed), Inyo County, Death Valley National Monument, on left bank 0.4 mile east of Wildrose Range headquarters, 2 miles east of Wildrose Spring, and 2.5 miles east of Wildrose Station.

DRAINAGE AREA.--23.7 sq mi.

PERIOD OF RECORD.--October 1960 to current year. Weather records since June 1964.

INSTRUMENTATION.--Water-stage recorder with rain-gage attachment at altitude of 4,300 ft (from topographic map). Recording and storage-type precipitation gages, recording anemometer, and maximum-minimum thermometer at altitude of 9,990 ft; similar instruments and 24-inch screened evaporation pan at altitude of 5,750 ft; recording rain gages at altitudes of 7,200, 6,400, 5,300, and 5,200 ft; flowmeter recording ground-water withdrawals at altitude of 4,300 ft.

AVERAGE DISCHARGE.--13 years, 0.021 cfs (15 acre-ft per year).

EXTREMES.--Current year: Maximum discharge, 0.33 cfs Feb. 11 (gage height, 0.38 ft); no flow all year except Jan. 18, 19, Feb. 11, 12.
Period of record: Maximum discharge, 1,060 cfs Sept. 4, 1967 (gage height, 6.24 ft), on basis of slope-area measurement of maximum flow; no flow all or most of each year.

REMARKS.--Records poor. No regulation or diversion above station except spring diversion to ranger headquarters.

Period	Pan evaporation (inches)	Temperature (°C) at altitude: 9,990 ft Maximum	9,990 ft Minimum	5,750 ft Maximum	5,750 ft Minimum	Ground water (acre-feet) 4,300 ft
Aug. 16 to Oct. 13	18.52	12.2	-3.9	20.0	4.4	--
Oct. 13 to Dec. 12	5.82				-14.4	1.68
Dec. 12 to Mar. 1	--			12.8	-5.6	2.47
Mar. 1 to Apr. 26	7.29			23.9	1.1	2.71
Apr. 26 to June 15	12.85			20.0	8.9	1.87
June 15 to Aug. 15	22.20			33.3	18.9	1.98

Precipitation (inches) at location and altitude:

Month	117°05'05" 36°13'05" 9,990 ft	117°04'15" 36°15'30" 7,200 ft	117°06'50" 36°13'55" 6,400 ft	117°06'40" 36°15'10" 5,750 ft	117°08'10" 36°16'15" 5,300 ft	117°09'50" 36°14'45" 5,200 ft	117°10'40" 36°15'55" 4,300 ft
October 1972.....	--	1.47	1.44	1.50	0.80	0.90	0.90
November.....	--	1.54	.82	.10	.40	1.12	1.10
December.....	--	--	.48	.10	.02	.10	.10
CAL YR 1972.....	--	--	5.86	3.94	1.51	2.77	2.60
January 1973.....	--	--	1.59	--	.67	1.22	1.00
February.....	--	1.95	1.93	2.60	1.85	3.98	3.40
March.....	--	2.39	2.08	1.27	1.25	1.74	1.20
April.....	--	.26	.20	.20	.42	.04	.20
May.....	--	.52	.81	.35	.03	.20	.30
June.....	--	.06	.06	0	0	0	0
July.....	--	.02	0	0	0	0	0
August.....	1.02	1.09	.37	.44	.10	.07	0
September.....	0	0	0	0	0	0	0
WTR YR 1973.....	--	--	9.78	--	5.54	9.37	8.20

Average Wind Velocity (mph) at location and altitude:

Month	117°05'05", 36°13'05" 9,990 ft	117°06'40", 36°15'10" 5,750 ft
October 1972....	5.56	5.13
November.....	1.94	4.17
December.....	3.25	4.61
January 1973....	6.37	3.58
February.....	1.84	4.33
March.....	3.08	5.15
April.....	3.90	5.90
May.....	3.88	5.67
June.....	8.00	5.92
July.....	7.43	5.90
August.....	8.15	5.75
September.....	7.76	6.11

10250600 WILDROSE CREEK NEAR WILDROSE STATION, CALIF.--Continued

DISCHARGE, IN CUBIC FEET PER SECOND, WATER YEAR OCTOBER 1972 TO SEPTEMBER 1973

DAY	OCT	NOV	DEC	JAN	FEB	MAR	APR	MAY	JUN	JUL	AUG	SEP
1				0	0							
2				0	0							
3				0	0							
4				0	0							
5				0	0							
6				0	0							
7				0	0							
8				0	0							
9				0	0							
10				0	0							
11				0	.15							
12				0	.04							
13				0	0							
14				0	0							
15				0	0							
16				0	0							
17				0	0							
18				.06	0							
19				.08	0							
20				0	0							
21				0	0							
22				0	0							
23				0	0							
24				0	0							
25				0	0							
26				0	0							
27				0	0							
28				0	0							
29				0	------							
30				0	------							
31		------		0	------		------		------			------
TOTAL	0	0	0	.14	.19	0	0	0	0	0	0	0
MEAN	0	0	0	.005	.007	0	0	0	0	0	0	0
MAX	0	0	0	.08	.15	0	0	0	0	0	0	0
MIN	0	0	0	0	0	0	0	0	0	0	0	0
AC-FT	0	0	0	.3	.4	0	0	0	0	0	0	0

CAL YR 1972 TOTAL 0.00 MEAN .0000 MAX .00 MIN 0 AC-FT .00
WTR YR 1973 TOTAL 0.33 MEAN .0009 MAX .15 MIN 0 AC-FT .7

PEAK DISCHARGE (BASE, 5.0 CFS).--No peak above base.

19S/44E-23K1. U.S. Geological Survey observation well drilled in alluvium to bedrock. Diameter 1¼ inches. Depth 30.0 ft. LSD 4,320 ft above MSL.

HIGHEST WATER LEVEL.--24.37 ft below LSD, Feb. 17, 1969.

LOWEST STATIC WATER LEVEL.--26.59 ft below LSD, Apr. 28, 1971.

PERIOD OF RECORD.--February 1969 to current year.

Date	Water level	Date	Water level	Date	Water level	Date	Water level
Oct. 13, 1972	26.38	Dec. 12, 1972	26.37	Feb. 14, 1973	26.29	Apr. 26, 1973	26.30
June 15, 1973	26.27	Aug. 15, 1973	26.31				

10250800 DARWIN CREEK NEAR DARWIN, CALIF.

LOCATION.--Lat 36°19'14", long 117°31'23", in NW¼SE¼SW¼ sec.34, T.18 S., R.41 E., Inyo County, on left bank 510 ft downstream from Darwin Falls, 1.6 miles upstream from unnamed tributary, and 5.2 miles northeast of Darwin.

DRAINAGE AREA.--173 sq mi.

PERIOD OF RECORD.--October 1962 to current year.

GAGE.--Water-stage recorder. Altitude of gage is 2,640 ft (from topographic map). U.S. Weather Bureau nonrecording rain gage at Darwin. Prior to Aug. 6, 1970, at site 190 ft downstream at same datum.

AVERAGE DISCHARGE.--11 years, 0.50 cfs (362 acre-ft per year).

EXTREMES.--Current year: Maximum discharge, 54 cfs Aug. 4 (gage height, 4.25 ft); minimum daily, 0.06 cfs May 17, 18.

Period of record: Maximum discharge, 4,400 cfs Jan. 25, 1969 (gage height, 8.40 ft, at site then in use, from floodmarks), on basis of slope-conveyance measurement of maximum flow; maximum gage height, 20.42 ft, present site from floodmarks, date and discharge unknown; minimum daily discharge, 0.05 cfs Aug. 30 to Sept. 4, 1969.

REMARKS.--Records good. No regulation above station. Town of Darwin pumps water above station for municipal supply.

DISCHARGE, IN CUBIC FEET PER SECOND, WATER YEAR OCTOBER 1972 TO SEPTEMBER 1973

DAY	OCT	NOV	DEC	JAN	FEB	MAR	APR	MAY	JUN	JUL	AUG	SEP
1	.22	.18	.27	.30	.18	.21	.18	.24	.21	.16	.27	.16
2	.22	.16	.26	.30	.18	.21	.16	.21	.21	.14	.30	.16
3	.21	.16	.26	.27	.21	.21	.16	.21	.21	.14	.33	.16
4	.21	.16	.26	.27	.24	.18	.16	.21	.18	.14	2.2	.14
5	.21	.16	.26	.27	.27	.18	.18	.21	.18	.14	.24	.14
6	.20	.16	.25	.27	.30	.18	.18	.18	.21	.14	.21	.16
7	.20	.18	.25	.27	.33	.18	.18	.18	.21	.16	.18	.14
8	.20	.21	.25	.27	.37	.18	.18	.16	.18	.16	.18	.14
9	.19	.21	.25	.27	.41	.16	.16	.16	.21	.18	.18	.16
10	.19	.21	.25	.27	.45	.16	.16	.14	.21	.21	.18	.18
11	.19	.21	.24	.27	.59	.19	.18	.14	.21	.21	.18	.16
12	.18	.21	.24	.27	.37	.18	.18	.12	.21	.21	.21	.14
13	.18	.21	.24	.27	.30	.21	.21	.14	.21	.21	.21	.14
14	.18	.24	.24	.27	.24	.16	.18	.14	.24	.21	.21	.16
15	.18	.24	.21	.30	.24	.16	.21	.12	.26	.18	.21	.16
16	.18	.27	.21	.30	.21	.16	.21	.08	.24	.18	.21	.16
17	.18	.27	.21	.30	.18	.16	.21	.06	.24	.21	.21	.14
18	.18	.30	.21	.33	.18	.18	.21	.06	.24	.21	.21	.14
19	.18	.30	.24	.33	.18	.14	.18	.08	.24	.24	.21	.12
20	.21	.30	.24	.33	.18	.16	.21	.10	.24	.24	.21	.12
21	.21	.29	.24	.33	.21	.16	.21	.12	.24	.24	.24	.10
22	.24	.29	.24	.33	.18	.21	.21	.14	.21	.24	.24	.10
23	.24	.29	.24	.27	.18	.21	.21	.14	.21	.18	.24	.12
24	.24	.28	.24	.21	.18	.21	.21	.16	.24	.16	.24	.14
25	.24	.28	.24	.24	.18	.18	.21	.18	.21	.18	.21	.14
26	.21	.28	.24	.24	.18	.24	.21	.18	.21	.24	.21	.14
27	.21	.28	.24	.24	.16	.27	.21	.18	.21	.21	.21	.14
28	.21	.27	.24	.21	.18	.27	.24	.18	.18	.21	.18	.15
29	.21	.27	.24	.18	------	.24	.24	.18	.18	.24	.16	.15
30	.21	.27	.30	.18	------	.21	.24	.18	.18	.24	.16	.15
31	.21	------	.30	.18	------	.21	------	.21	------	.27	.16	------
TOTAL	6.32	7.14	7.60	8.34	7.06	5.96	5.87	4.79	6.41	6.08	8.59	4.31
MEAN	.20	.24	.25	.27	.25	.19	.20	.15	.21	.20	.28	.14
MAX	.24	.30	.30	.33	.59	.27	.24	.24	.26	.27	2.2	.18
MIN	.18	.16	.21	.18	.16	.14	.16	.06	.18	.14	.16	.10
AC-FT	13	14	15	17	14	12	12	9.5	13	12	17	8.5
(a)	.31	.32	0	.41	.94	.52	.04	.18	.11	0	.64	0

CAL YR 1972 TOTAL 73.99 MEAN .20 MAX 9.6 MIN .10 AC-FT 147
WTR YR 1973 TOTAL 78.47 MEAN .22 MAX 2.2 MIN .06 AC-FT 156

PEAK DISCHARGE (BASE, 10 CFS).--Aug. 4 (2000) 54 cfs (4.25 ft).

a Precipitation, in inches.

10251300 AMARGOSA RIVER AT TECOPA, CALIF.

LOCATION.--Lat 35°50'53", long 116°13'43", in NW¼NW¼SE¼ sec.9, T.20 N., R.7 E., Inyo County, on right bank 20 ft upstream from county road, and 0.2 mile west of Tecopa.

PERIOD OF RECORD.--October 1961 to current year.

GAGE.--Water-stage recorder and concrete-culvert control. Altitude of gage is 1,310 ft (from topographic map).

AVERAGE DISCHARGE.--12 years, 2.50 cfs (1,810 acre-ft per year).

EXTREMES.--Current year: Maximum discharge, 2,000 cfs (estimated) Oct. 3 (gage height, 16.58 ft, from floodmark); no flow Oct. 1, 2, June 10 to Sept. 30.
Period of record: Maximum discharge, 5,000 cfs (estimated) Feb. 26, 1969 (gage height, 18.34 ft, from floodmark); no flow many days in most years.

REMARKS.--Records poor. Gage destroyed during flood of Oct. 3. No gage-height record during year. Mean monthly flows estimated on basis of discharge measurements, high-water marks, rainfall records, and hydrographic analysis.

MONTHLY AND YEARLY MEAN DISCHARGE, WATER YEAR OCTOBER 1972 TO SEPTEMBER 1973

Month	Mean discharge (cubic feet per second)
October	17.3
November	.55
December	.77
CAL YR 1972	2.03
January	1.57
February	5.75
March	4.47
April	1.00
May	.15
June	.02
July	0
August	0
September	0
WTR YR 1973	2.63

10252300 CHINA SPRING CREEK NEAR MOUNTAIN PASS, CALIF.

LOCATION.--Lat 35°28'07", long 115°30'29", in E½ sec.31, T.16 N., R.14 E., San Bernardino County, on upstream right bank of State highway culvert on U.S. Highways 466 and 91, and 2.0 miles east of Mountain Pass.

DRAINAGE AREA.--0.94 sq mi.

PERIOD OF RECORD.--January 1959 to September 1973 (discontinued).

GAGE.--Water-stage recorder with rain-gage attachment. Culvert control since Oct. 9, 1963. Altitude of gage is 4,400 ft (from topographic map). Prior to Oct. 9, 1963, at different datum.

AVERAGE DISCHARGE.--14 years (1960-73), 0.0009 cfs (0.7 acre-ft per year).

EXTREMES.--Current year: No flow during year.
Period of record: Maximum discharge, 113 cfs Aug. 5, 1964 (gage height, 2.75 ft), by computation of maximum flow through culvert; no flow most years.

REMARKS.--No flow since Aug. 29, 1971. No regulation or diversion above station. Monthly precipitation, in inches, is as follows: October, 0.3; November, 1.3; December, 0.6; January, 0.7; February, 1.7; March, 2.0; August, 0.1; the water year, 6.7.

10252550 CARUTHERS CREEK NEAR IVANPAH, CALIF.

LOCATION.--Lat 35°14'33", long 115°17'58", in NW¼NW¼NE¼ sec.6, T.13 N., R.16 E., San Bernardino County, on left bank 6.6 miles south of Ivanpah.

DRAINAGE AREA.--1.13 sq mi.

PERIOD OF RECORD.--October 1963 to current year.

GAGE.--Water-stage recorder. Altitude of gage is 5,640 ft (from topographic map).

AVERAGE DISCHARGE.--10 years, 0.076 cfs (55 acre-ft per year).

EXTREMES.--Current year: Maximum discharge, 2.8 cfs Mar. 7 (gage height, 1.47 ft); no flow most of year.
Period of record: Maximum discharge, 518 cfs Aug. 25, 1969 (gage height, 4.77 ft), on basis of slope-conveyance measurement of maximum flow; no flow most of each year.

REMARKS.--Records good. No regulation or diversion above station.

DISCHARGE, IN CUBIC FEET PER SECOND, WATER YEAR OCTOBER 1972 TO SEPTEMBER 1973

DAY	OCT	NOV	DEC	JAN	FEB	MAR	APR	MAY	JUN	JUL	AUG	SEP
1		0	0	0	0	.10	.35	.07				
2		0	0	0	0	.07	.27	.02				
3		0	0	0	0	.02	.20	0				
4		0	.16	0	0	.02	.14	0				
5		0	.04	0	0	.02	.10	0				
6		0	0	0	0	.08	.10	0				
7		0	0	0	0	1.3	.14	0				
8		0	0	0	0	.65	.14	0				
9		0	0	0	0	1.0	.10	0				
10		0	0	0	0	.77	.14	0				
11		0	0	0	0	.54	.14	0				
12		0	0	0	0	1.2	.20	0				
13		0	0	0	.07	.54	.20	.01				
14		0	0	0	.10	.54	.20	.01				
15		0	0	0	.20	.44	.14	0				
16		.29	0	0	.14	.54	.10	0				
17		.14	0	.14	.07	.90	.04	0				
18		0	0	.04	.07	.44	.07	0				
19		0	0	.10	.10	.27	.07	0				
20		0	0	.04	.04	.35	.07	0				
21		0	0	.04	.10	.65	.04	0				
22		0	0	.04	.65	1.5	.07	0				
23		0	0	.01	.35	2.0	.04	0				
24		0	0	0	.27	1.5	.02	0				
25		0	0	0	.27	.90	.01	0				
26		0	0	0	.14	1.0	0	0				
27		0	0	0	.14	.77	0	0				
28		0	0	0	.20	.91	0	0				
29		0	0	0	------	.77	0	0				
30		0	0	0	------	.54	.15	0				
31		------	0	0	------	.44	------	0	------			------
TOTAL	0	.43	.20	.41	2.91	20.77	3.24	.11	0	0	0	0
MEAN	0	.014	.007	.013	.10	.67	.11	.004	0	0	0	0
MAX	0	.29	.16	.14	.65	2.0	.35	.07	0	0	0	0
MIN	0	0	0	0	0	.02	0	0	0	0	0	0
AC-FT	0	.9	.4	.8	5.8	41	6.4	.2	0	0	0	0

CAL YR 1972 TOTAL 4.70 MEAN .013 MAX 1.6 MIN 0 AC-FT 9.3
WTR YR 1973 TOTAL 28.07 MEAN .077 MAX 2.0 MIN 0 AC-FT 56

PEAK DISCHARGE (BASE, 10 CFS).--No peak above base.

10254005 SALTON SEA NEAR WESTMORLAND, CALIF.

LOCATION.--Lat 33°11'37", long 115°49'54", in NE¼SE¼SW¼ sec.21, T.11 S., R.11 E., Imperial County, at outer end of third mooring pier from western shore at Sandy Beach, and 15.5 miles northwest of Westmorland.

DRAINAGE AREA.--8,360 sq mi, approximately.

PERIOD OF RECORD.--November 1904 to current year. Records prior to 1932 are published in WSP 735.

GAGE.--Water-stage recorder. Datum of gage is 250.00 ft below mean sea level; gage readings have been converted to elevations below mean sea level. See WSP 1734 for history of changes prior to Mar. 2, 1956.

EXTREMES.--Current year: Maximum elevation, 231.1 ft below mean sea level Apr. 27 to June 9; minimum, 232.3 ft below mean sea level Oct. 1-24, Oct. 30 to Nov. 17.
Period of record: Maximum elevation, 195.9 ft below mean sea level in February and March 1907; minimum since 1906, 251.6 ft below mean sea level in November 1924.

REMARKS.--Bottom of sea is 277.7 ft below mean sea level. See WSP 300, 735, and 918 for condensed history of Salton Sea.

MONTHEND ELEVATIONS, IN FEET, BELOW MEAN SEA LEVEL, WATER YEAR OCTOBER 1972 TO SEPTEMBER 1973

Date	Elevation (feet)	Date	Elevation (feet)
Sept. 30	232.3	Apr. 30	231.1
Oct. 31	232.3	May 31	a 231.1
Nov. 30	232.2	June 30	231.3
Dec. 31	232.1	July 31	a 231.5
Jan. 31	231.8	Aug. 31	a 231.7
Feb. 28	231.5	Sept. 30	232.1
Mar. 31	231.3		

a Estimated.

INFLOW TO SALTON SEA, CALIF.

Salton Sea, located near the northeast corner of Imperial County, is a closed basin consisting of 8,360 sq mi. The following table shows monthly and annual inflow, in acre-feet, for the water year October 1972 to September 1973 and the calendar year January to December 1972. Inflow from Imperial Valley is the sum of flows in Alamo River (see sta 10254730), New River (see sta 10255550), 22 drains and wasteways, and since October 1967 San Felipe Creek (see sta 10255885). Since October 1967 inflow from Coachella Valley is the sum of flows in Whitewater River (see sta 10259540), Salt Creek (see sta 10254050), and 20 drains. Flow in Whitewater River and Salt Creek was measured at gaging stations, that for the drains was furnished by Coachella County Water District (see Salton Sea basin for other flows to the sea). Table also shows amount of flow in Alamo and New Rivers contributed by Mexico as furnished by Imperial Irrigation District.

	OCT	NOV	DEC	JAN	FEB	MAR	APR	MAY	JUN	JUL	AUG	SEP
Inflow from												
Imperial Valley	101,200	83,370	88,480	94,220	83,120	104,700	124,600	115,600	90,470	87,660	86,390	100,800
Coachella Valley	11,400	9,940	12,220	12,640	10,860	13,160	13,700	15,560	13,450	12,820	14,520	14,370

TOTAL CAL YR 1972 1,304,000 AC-FT
TOTAL WTR YR 1973 1,315,000 AC-FT

FLOW FROM MEXICO AT INTERNATIONAL BOUNDARY

Alamo River	117	135	140	135	146	152	110	98	84	103	125	104
New River	13,900	9,220	8,600	10,550	10,290	10,620	10,640	10,200	8,850	8,950	9,210	8,640

CAL YR 1972: Alamo River 1,440 AC-FT WTR YR 1973: 1,450 AC-FT
CAL YR 1972: New River 111,200 AC-FT WTR YR 1973: 119,700 AC-FT

10254050 SALT CREEK NEAR MECCA, CALIF.

LOCATION.--Lat 33°26'49", long 115°50'33", in NE¼SE¼SW¼ sec.28, T.8 S., R.11 E., Riverside County, on pier of Southern Pacific Railroad bridge, 0.3 mile upstream from mouth, and 16 miles southeast of Mecca.

DRAINAGE AREA.--269 sq mi.

PERIOD OF RECORD.--January 1961 to current year.

GAGE.--Water-stage recorder. Altitude of gage is 230 ft below mean sea level (from topographic map).

AVERAGE DISCHARGE.--12 years, 5.55 cfs (4,020 acre-ft per year).

EXTREMES.--Current year: Maximum discharge, 225 cfs Aug. 4 (gage height, 6.21 ft), from rating curve extended above 11 cfs; minimum daily, 0.84 cfs Sept. 8.
Period of record: Maximum discharge, 1,260 cfs Aug. 10, 1971 (gage height, 6.92 ft), from rating curve extended above 25 cfs on basis of slope-area measurement at gage height 6.62 ft; minimum daily, 0.40 cfs Aug. 10, 1966.

REMARKS.--Records good below 11 cfs and poor above. No regulation or diversion above station. Flow sustained by irrigation seepage.

DISCHARGE, IN CUBIC FEET PER SECOND, WATER YEAR OCTOBER 1972 TO SEPTEMBER 1973

DAY	OCT	NOV	DEC	JAN	FEB	MAR	APR	MAY	JUN	JUL	AUG	SEP
1	3.2	4.8	6.3	7.8	8.0	7.8	6.1	3.9	2.2	1.8	1.7	1.8
2	3.2	5.0	6.7	7.8	7.8	7.2	5.9	3.9	2.3	1.8	1.7	1.8
3	3.2	5.4	7.0	7.8	7.5	7.2	5.6	3.8	2.3	1.8	3.0	1.8
4	3.3	5.6	7.2	8.0	8.0	7.2	5.4	3.8	2.4	1.8	23	1.8
5	3.4	5.6	7.5	8.0	7.8	7.2	5.0	3.8	2.4	1.8	2.0	1.9
6	3.6	5.6	7.0	8.0	7.8	7.0	4.8	3.6	2.2	1.7	1.8	1.9
7	3.8	5.6	6.7	8.0	8.0	7.0	5.0	3.8	2.0	1.7	1.7	1.7
8	3.9	5.6	7.5	8.0	7.8	7.8	5.2	3.8	2.0	1.7	1.6	.84
9	4.0	5.6	7.2	8.3	7.5	14	4.8	3.8	1.9	1.7	1.6	.91
10	4.1	5.6	7.0	8.3	7.2	15	5.0	3.6	1.9	1.7	1.6	1.3
11	4.1	5.9	7.2	8.3	8.0	9.4	6.1	3.5	1.9	1.7	1.7	.88
12	4.1	6.3	7.5	8.0	9.8	8.6	5.4	3.4	2.0	1.7	1.7	1.1
13	4.3	6.5	7.2	8.0	9.1	8.3	4.7	3.3	2.1	1.7	1.6	1.5
14	4.3	12	7.8	8.3	8.3	7.8	4.6	3.2	2.1	1.7	1.7	1.8
15	4.3	12	7.5	8.3	8.0	7.5	4.5	3.1	2.0	1.7	1.7	2.0
16	4.5	7.9	7.5	8.6	8.0	6.7	4.3	3.0	2.1	1.7	1.7	2.0
17	4.3	9.1	7.8	8.9	7.8	6.7	4.5	3.0	2.2	1.7	1.7	2.0
18	4.8	10	8.0	8.9	7.5	7.0	4.5	3.0	2.2	1.7	1.6	2.0
19	7.0	7.5	8.0	8.6	7.5	7.0	4.3	2.8	2.1	1.7	1.6	2.1
20	7.8	7.0	8.0	9.8	7.8	6.7	4.3	2.6	2.2	1.6	1.6	2.2
21	6.3	6.5	7.8	8.6	8.3	6.7	4.3	2.5	1.9	1.5	1.7	2.2
22	6.1	6.1	7.8	8.3	10	7.0	4.2	2.5	1.8	1.5	1.7	2.2
23	5.6	6.5	8.0	8.3	9.4	7.2	4.2	2.4	1.8	1.6	1.7	2.2
24	7.2	6.5	8.0	7.8	8.9	6.7	4.3	2.5	1.8	1.7	1.7	2.2
25	6.5	5.9	8.0	7.8	8.3	6.5	4.3	2.6	1.8	1.7	1.7	2.2
26	5.6	6.3	7.8	8.0	8.0	6.5	4.2	2.6	1.8	1.6	1.7	2.1
27	6.1	6.5	7.5	8.6	8.0	6.5	4.0	2.5	1.8	1.6	1.7	2.0
28	6.1	6.7	7.8	8.0	8.0	6.5	3.9	2.5	1.7	1.7	1.8	2.4
29	6.1	6.5	8.3	7.8	------	6.3	3.9	2.3	1.7	1.7	1.8	2.1
30	5.8	6.3	7.8	8.0	------	6.3	3.8	2.2	1.8	1.7	1.8	2.2
31	5.0	------	7.2	8.3	------	6.1	------	2.2	------	1.7	1.7	------
TOTAL	151.6	202.4	232.6	255.2	228.1	235.4	141.1	95.5	60.4	52.4	75.3	55.13
MEAN	4.89	6.75	7.50	8.23	8.15	7.59	4.70	3.08	2.01	1.69	2.43	1.84
MAX	7.8	12	8.3	9.8	10	15	6.1	3.9	2.4	1.8	23	2.4
MIN	3.2	4.8	6.3	7.8	7.2	6.1	3.8	2.2	1.7	1.5	1.6	.84
AC-FT	301	401	461	506	452	467	280	189	120	104	149	109

CAL YR 1972 TOTAL 1,650.43 MEAN 4.51 MAX 18 MIN .67 AC-FT 3,270
WTR YR 1973 TOTAL 1,785.13 MEAN 4.89 MAX 23 MIN .84 AC-FT 3,540

10254730 ALAMO RIVER NEAR NILAND, CALIF.

LOCATION.--Lat 33°12'03", long 115°36'07", in NE¼SW¼NE¼ sec.22, T.11 S., R.13 E., Imperial County, on left bank 0.6 mile upstream from mouth, and 5.8 miles southwest of Niland.

PERIOD OF RECORD.--January 1943 to current year. Monthly discharge only for January 1943 to September 1960, published in WSP 1734.

GAGE.--Water-stage recorder. Datum of gage is 235 ft below mean sea level (from topographic map).

EXTREMES.--Period of record: Maximum daily discharge, 2,080 cfs Nov. 27, 1967; minimum daily, 288 cfs Jan. 2, 1966.

REMARKS.--Discharge represents seepage and return flow from irrigated areas.

COOPERATION.--Records furnished by Imperial Irrigation District and reviewed by Geological Survey.

DISCHARGE, IN CUBIC FEET PER SECOND, WATER YEAR OCTOBER 1972 TO SEPTEMBER 1973

DAY	OCT	NOV	DEC	JAN	FEB	MAR	APR	MAY	JUN	JUL	AUG	SEP
1	1,080	823	700	719	903	616	1,110	1,120	965	871	747	762
2	1,070	856	743	677	913	681	1,070	1,130	917	871	762	724
3	1,140	871	738	696	951	733	1,120	1,150	908	805	757	771
4	1,210	917	790	829	941	809	1,130	1,140	847	757	790	786
5	1,180	927	786	809	885	809	1,140	1,130	833	766	809	814
6	1,330	852	800	866	927	790	1,170	1,080	823	771	786	795
7	1,740	838	819	833	922	833	1,250	1,120	823	790	771	823
8	1,540	842	809	847	955	875	1,220	1,140	829	781	705	814
9	1,020	861	781	908	932	1,010	1,210	1,120	842	795	710	861
10	861	838	800	951	871	1,020	1,210	1,110	829	795	710	880
11	875	894	809	989	894	1,010	1,220	1,090	829	738	738	903
12	889	852	852	965	866	1,070	1,180	1,090	809	719	762	946
13	847	819	800	955	776	1,040	1,180	1,100	809	714	747	979
14	795	823	814	903	733	998	1,170	1,090	814	700	762	1,060
15	738	790	856	644	686	871	1,180	1,030	790	733	752	1,040
16	700	838	922	582	672	847	1,200	975	842	757	786	1,030
17	724	951	932	592	649	838	1,220	984	823	771	771	1,030
18	809	653	975	502	696	823	1,200	960	847	733	805	941
19	738	649	1,010	544	686	856	1,250	960	809	786	809	1,010
20	644	686	932	582	710	889	1,280	955	743	795	762	1,080
21	620	592	852	762	842	880	1,270	965	729	766	776	1,160
22	649	577	842	823	852	880	1,240	951	733	757	847	1,120
23	705	606	861	842	719	927	1,220	979	800	738	752	1,130
24	691	577	781	819	667	975	1,200	1,030	786	781	681	1,100
25	677	582	667	833	582	1,040	1,140	1,030	805	762	681	1,090
26	686	630	558	833	563	1,120	1,150	970	795	724	681	1,080
27	733	587	563	833	601	1,060	1,120	984	800	724	691	1,070
28	743	601	696	875	620	989	1,170	946	786	752	672	1,090
29	766	630	667	866	------	994	1,170	1,040	819	776	672	1,150
30	805	677	691	932	------	1,040	1,140	1,030	823	795	724	1,220
31	814	------	719	871	------	1,100	------	1,080	------	805	757	------
TOTAL	27,819	22,639	24,565	24,682	22,014	28,423	35,530	32,479	24,607	23,828	23,175	29,259
MEAN	897	755	792	796	786	917	1,184	1,048	820	769	748	975
MAX	1,740	951	1,010	989	955	1,120	1,280	1,150	965	871	847	1,220
MIN	620	577	558	502	563	616	1,070	946	729	700	672	724
AC-FT	55,180	44,900	48,720	48,960	43,660	56,380	70,470	64,420	48,810	47,260	45,970	58,040

CAL YR 1972 TOTAL 322,046 MEAN 880 MAX 1,740 MIN 558 AC-FT 638,800
WTR YR 1973 TOTAL 319,020 MEAN 874 MAX 1,740 MIN 502 AC-FT 632,800

10255550 NEW RIVER NEAR WESTMORLAND, CALIF.

LOCATION.--Lat 33°06'17", long 115°39'49", in SW¼SW¼SW¼ sec.19, T.12 S., R.13 E., Imperial County, on right bank 3.5 miles upstream from mouth, and 5.2 miles northwest of Westmorland.

PERIOD OF RECORD.--January 1943 to current year. Monthly discharge only for January 1943 to September 1960, published in WSP 1734.

GAGE.--Water-stage recorder. Altitude of gage is 220 ft below mean sea level (from topographic map).

EXTREMES.--Period of record: Maximum daily discharge, 1,180 cfs Sept. 19, 1963; minimum daily, 293 cfs Jan. 6, 1967.

REMARKS.--Discharge represents seepage and return flow from irrigated areas.

COOPERATION.--Records furnished by Imperial Irrigation District and reviewed by Geological Survey.

DISCHARGE, IN CUBIC FEET PER SECOND, WATER YEAR OCTOBER 1972 TO SEPTEMBER 1973

DAY	OCT	NOV	DEC	JAN	FEB	MAR	APR	MAY	JUN	JUL	AUG	SEP
1	594	559	461	561	559	543	698	718	563	528	600	492
2	582	555	496	576	592	563	732	695	543	566	570	519
3	615	517	536	536	607	559	730	726	555	543	592	519
4	615	523	528	543	626	563	708	720	576	534	615	547
5	621	534	526	594	619	568	697	676	566	572	720	515
6	722	523	496	647	638	609	700	683	572	545	580	528
7	885	555	517	662	572	584	728	683	584	551	555	540
8	874	555	523	655	561	588	712	689	586	555	526	563
9	889	540	509	660	547	628	730	687	582	568	500	574
10	841	540	504	617	555	681	722	714	588	540	472	576
11	806	553	511	617	576	670	722	704	584	530	507	549
12	768	588	515	559	600	710	704	695	588	551	526	578
13	660	590	515	538	600	689	730	683	574	496	536	572
14	609	574	528	580	590	666	738	660	549	513	582	572
15	598	532	511	594	559	659	744	643	532	526	551	566
16	564	526	530	632	563	647	762	653	545	540	530	576
17	568	572	526	666	566	630	758	670	564	553	545	596
18	590	564	511	630	553	609	764	676	586	543	536	572
19	598	588	580	576	543	596	754	685	582	553	534	592
20	538	555	549	561	534	626	722	643	538	526	559	584
21	538	507	538	561	607	624	742	630	528	561	633	588
22	525	483	580	549	681	651	740	666	523	534	526	626
23	528	481	561	584	677	647	742	626	538	582	525	643
24	549	475	561	582	598	653	762	662	547	576	504	641
25	517	466	525	603	600	674	740	657	570	545	526	630
26	461	473	446	603	570	695	716	592	568	517	509	628
27	483	481	470	590	607	752	702	613	555	496	492	622
28	513	446	534	580	570	693	728	638	538	502	505	655
29	509	461	542	605	------	687	746	674	519	515	494	651
30	513	463	561	617	------	698	730	638	538	519	490	651
31	523	------	592	566	------	679	------	572	------	561	504	------
TOTAL	19,196	15,779	16,282	18,444	16,470	19,841	21,903	20,671	16,781	16,741	16,844	17,465
MEAN	619	526	525	595	588	640	730	667	559	540	543	582
MAX	889	590	592	666	681	752	764	726	588	582	720	655
MIN	461	446	446	536	534	543	697	572	519	496	472	492
AC-FT	38,080	31,300	32,300	36,580	32,670	39,350	43,440	41,000	33,290	33,210	33,410	34,640

CAL YR 1972 TOTAL 210,721 MEAN 576 MAX 889 MIN 446 AC-FT 418,000
WTR YR 1973 TOTAL 216,417 MEAN 593 MAX 889 MIN 446 AC-FT 429,300

10255700 SAN FELIPE CREEK NEAR JULIAN, CALIF.

LOCATION.--Lat 33°07'07", long 116°26'04", San Diego County, in Anza Borrego State Park, on left bank under bridge on State Highway 78 in Sentenac Canyon, 1.0 mile upstream from Grapevine Canyon, and 10 miles northeast of Julian.

DRAINAGE AREA.--89.2 sq mi.

PERIOD OF RECORD.--August 1958 to current year.

GAGE.--Water-stage recorder and concrete low-water control. Datum of gage is 1,872.69 ft above mean sea level.

AVERAGE DISCHARGE.--15 years, 0.25 cfs (181 acre-ft per year).

EXTREMES.--Current year: Maximum discharge, 4.5 cfs Feb. 11 (gage height, 1.59 ft); no flow Oct. 1 to Nov. 29, May 18 to Sept. 30.
Period of record: Maximum discharge, 1,050 cfs Aug. 22, 1967 (gage height, 4.08 ft), from rating curve extended above 12 cfs on basis of slope-area measurement at gage height 3.50 ft; no flow for many days in each year.

REMARKS.--Records good. No regulation or diversion above station.

DISCHARGE, IN CUBIC FEET PER SECOND, WATER YEAR OCTOBER 1972 TO SEPTEMBER 1973

DAY	OCT	NOV	DEC	JAN	FEB	MAR	APR	MAY	JUN	JUL	AUG	SEP
1		0	.08	.23	.27	.34	.24	.24				
2		0	.10	.24	.27	.33	.23	.18				
3		0	.10	.28	.28	.31	.22	.14				
4		0	.14	.36	.28	.32	.22	.12				
5		0	.27	.39	.28	.36	.21	.14				
6		0	.16	.25	.37	.35	.21	.17				
7		0	.15	.24	.32	.48	.20	.13				
8		0	.24	.24	.30	.39	.20	.11				
9		0	.46	.27	.55	.41	.19	.09				
10		0	.22	.25	.66	.35	.18	.07				
11		0	.20	.24	2.3	.37	.17	.05				
12		0	.18	.25	1.6	.47	.17	.04				
13		0	.20	.25	2.1	.38	.17	.03				
14		0	.18	.26	.76	.46	.18	.02				
15		0	.18	.27	.71	.39	.18	.01				
16		0	.18	.28	.79	.37	.19	.01				
17		0	.20	.36	.57	.36	.19	.01				
18		0	.21	.30	.46	.35	.20	0				
19		0	.20	.46	.36	.34	.24	0				
20		0	.21	.29	.37	.36	.24	0				
21		0	.20	.27	.73	.40	.26	0				
22		0	.21	.26	.85	.34	.25	0				
23		0	.19	.24	.45	.31	.23	0				
24		0	.21	.25	.40	.30	.19	0				
25		0	.19	.27	.35	.29	.18	0				
26		0	.19	.35	.33	.28	.16	0				
27		0	.21	.28	.34	.27	.13	0				
28		0	.21	.27	.35	.28	.11	0				
29		0	.19	.27	------	.26	.14	0				
30		.06	.18	.29	------	.25	.22	0				
31		------	.21	.29	------	.24	------	0	------			------
TOTAL	0	.06	6.05	8.75	17.40	10.71	5.90	1.56	0	0	0	0
MEAN	0	.002	.20	.28	.62	.35	.20	.050	0	0	0	0
MAX	0	.06	.46	.46	2.3	.48	.26	.24	0	0	0	0
MIN	0	0	.08	.23	.27	.24	.11	0	0	0	0	0
AC-FT	0	.1	12	17	35	21	12	3.1	0	0	0	0

CAL YR 1972 TOTAL 32.59 MEAN .089 MAX .46 MIN 0 AC-FT 65
WTR YR 1973 TOTAL 50.43 MEAN .14 MAX 2.3 MIN 0 AC-FT 100

PEAK DISCHARGE (BASE, 50 CFS).--No peak above base.

10255800 COYOTE CREEK NEAR BORREGO SPRINGS, CALIF.

LOCATION.--Lat 33°22'06", long 116°25'14", in NE¼NE¼NE¼ sec.26, T.9 S., R.5 E., San Diego County, on left bank 0.5 mile downstream from Box Canyon, 1.8 miles northwest of Rancho De Anza, and 8.2 miles northwest of Borrego Springs.

DRAINAGE AREA.--144 sq mi.

PERIOD OF RECORD.--October 1950 to current year. Monthly discharge only for October and November 1950, published in WSP 1734.

GAGE.--Water-stage recorder. Altitude of gage is 1,250 ft (from topographic map). Prior to Mar. 24, 1967, at site 0.6 mile upstream at different datum.

AVERAGE DISCHARGE.--23 years, 1.94 cfs (1,410 acre-ft per year).

EXTREMES.--Current year: Maximum discharge, 102 cfs Nov. 16 (gage height, 8.28 ft), from rating curve extended above 2.0 cfs on basis of slope-area measurement at gage height 10.3 ft; no flow on several days.
Period of record: Maximum discharge, 3,800 cfs July 28, 1951 (gage height, 14.14 ft, from floodmarks, site and datum then in use), on basis of slope-area measurement of maximum flow; no flow on several days in 1973.

REMARKS.--Records fair. Some regulation by diversion for irrigation about 0.5 mile above station since January 1973.

REVISIONS (WATER YEARS).--WRD Calif. 1972: 1969, 1971.

DISCHARGE, IN CUBIC FEET PER SECOND, WATER YEAR OCTOBER 1972 TO SEPTEMBER 1973

DAY	OCT	NOV	DEC	JAN	FEB	MAR	APR	MAY	JUN	JUL	AUG	SEP
1	.91	1.0	.95	1.8	.53	.44	0	.39	.63	.19	.17	.81
2	.97	1.0	.95	1.8	1.5	.44	.04	.38	.63	.02	.10	.83
3	.98	1.0	1.0	1.8	2.1	.44	0	.35	.63	0	.10	.57
4	.98	1.0	2.5	1.7	1.9	.44	0	.36	.63	.02	.10	.73
5	.92	1.0	2.0	1.7	1.9	.44	0	.32	.53	.19	.10	.53
6	.97	1.0	1.5	1.6	1.9	.74	.09	.38	.53	.15	.10	.73
7	.96	1.0	1.5	1.6	1.9	.44	.78	.37	.53	.30	.10	.59
8	.95	1.0	3.0	1.5	1.1	.53	1.5	.34	.44	.24	.13	.63
9	.99	1.0	2.0	1.5	.48	.44	1.5	.34	.44	.15	.13	.73
10	1.0	1.0	1.8	1.4	.44	.44	.69	.34	.53	.09	.14	.73
11	1.0	1.0	1.7	1.4	1.5	.44	.59	.40	.53	.15	.13	.63
12	1.1	1.0	1.7	1.3	2.1	.44	.59	.43	.53	.24	.10	.63
13	1.0	1.0	1.7	1.3	2.1	.44	.51	.46	.44	.30	.11	.63
14	1.1	1.2	1.7	1.3	1.9	.36	.58	.48	.53	.19	.13	.63
15	1.1	2.2	1.7	1.2	.96	.36	.93	.49	.63	.24	.16	.63
16	1.0	36	1.7	1.2	.44	.36	.89	.46	.53	.24	.14	.63
17	1.1	1.6	1.6	1.2	.44	.36	.67	.42	.53	.12	.12	.53
18	1.2	1.2	1.6	1.2	.44	.53	.41	.46	.53	.17	.10	.63
19	1.2	1.1	1.6	.75	.44	.73	.41	.44	.53	.12	.10	.63
20	1.8	1.0	1.6	.53	.44	.73	.39	.53	.63	.07	.45	.73
21	1.1	1.0	1.7	.53	.44	.53	.36	.53	.63	.10	.15	.73
22	1.1	1.0	1.7	.63	.44	.24	.36	.44	.63	.27	0	.73
23	1.0	1.0	1.9	.53	.44	.24	.50	.53	.63	.08	0	.73
24	1.0	1.0	1.6	.53	.36	.19	.66	.53	.33	.08	0	.73
25	1.0	.95	1.7	.53	.36	.12	.27	.53	.13	.07	0	.63
26	1.0	.93	1.8	.53	.36	0	.29	.53	.15	.12	0	.63
27	1.0	.95	1.8	.53	.44	0	.29	.53	.36	.27	0	.73
28	1.0	.95	1.9	.53	.44	0	.35	.53	.30	.09	.40	.67
29	1.0	.95	1.9	.53	------	0	.50	.44	.12	.06	.79	.65
30	1.0	.95	1.9	.53	------	0	.40	.44	.09	.07	.88	.66
31	1.0	------	1.9	.53	------	0	------	.53	------	.60	.73	------
TOTAL	32.43	66.98	53.60	33.71	27.79	10.86	14.55	13.70	14.30	5.00	5.66	20.07
MEAN	1.05	2.23	1.73	1.09	.99	.35	.49	.44	.48	.16	.18	.67
MAX	1.8	36	3.0	1.8	2.1	.74	1.5	.53	.63	.60	.88	.83
MIN	.91	.93	.95	.53	.36	0	0	.32	.09	0	0	.53
AC-FT	64	133	106	67	55	22	29	27	28	9.9	11	40

CAL YR 1972 TOTAL 493.98 MEAN 1.35 MAX 45 MIN .53 AC-FT 980
WTR YR 1973 TOTAL 298.65 MEAN .82 MAX 36 MIN 0 AC-FT 592

PEAK DISCHARGE (BASE, 20 CFS).--Nov. 16 (1715) 102 cfs (8.28 ft).

10255810 BORREGO PALM CREEK NEAR BORREGO SPRINGS, CALIF.

LOCATION.--Lat 33°16'44", long 116°25'45", in Anza-Borrego Desert State Park, San Diego County, on left bank 3.3 miles northwest of Borrego Springs.

DRAINAGE AREA.--21.8 sq mi.

PERIOD OF RECORD.--October 1950 to current year. Prior to October 1960, published as "Palm Canyon Creek near Borrego Springs." Monthly discharge only for October to November 1950, published in WSP 1734.

GAGE.--Water-stage recorder. Altitude of gage is 1,200 ft (from topographic map).

AVERAGE DISCHARGE.--23 years, 0.34 cfs (246 acre-ft per year).

EXTREMES.--Current year: Maximum discharge, 4.8 cfs Feb. 12 (gage height, 2.13 ft); no flow most of year. Period of record: Maximum discharge, 2,000 cfs (estimated) Aug. 23, 1955 (gage height, 9.9 ft, from floodmarks); no flow for several months in each year.

REMARKS.--Records good. No regulation or diversion above station.

DISCHARGE, IN CUBIC FEET PER SECOND, WATER YEAR OCTOBER 1972 TO SEPTEMBER 1973

DAY	OCT	NOV	DEC	JAN	FEB	MAR	APR	MAY	JUN	JUL	AUG	SEP
1			0	.19	.31	.61	2.3	.31				
2			0	.19	.31	.51	2.2	.22				
3			0	.19	.31	.46	1.8	.15				
4			0	.22	.31	.51	1.5	.15				
5			0	.25	.31	.51	1.2	.17				
6			0	.25	.31	.51	1.1	.28				
7			0	.25	.34	2.1	.85	.17				
8			0	.25	.28	2.0	.72	.13				
9			.09	.25	.22	2.1	.72	.13				
10			.02	.31	.22	1.6	.72	.11				
11			0	.31	1.8	2.0	.61	.10				
12			0	.31	3.7	2.8	.61	.09				
13			0	.31	3.4	3.0	.61	.08				
14			0	.28	2.4	3.4	.72	.07				
15			0	.28	2.0	2.7	.66	.06				
16			0	.28	1.5	2.3	.61	.06				
17			0	.51	1.2	2.1	.56	.05				
18			0	.46	1.1	2.0	.56	.04				
19			0	1.4	.99	1.6	.56	.02				
20			0	1.1	.92	2.1	.51	.02				
21			0	.78	1.1	2.2	.42	.02				
22			.04	.61	.99	3.0	.38	.01				
23			.07	.46	.78	2.7	.38	.01				
24			.09	.34	.66	2.4	.34	.01				
25			.13	.34	.56	2.6	.31	0				
26			.13	.46	.46	2.6	.28	0				
27			.15	.34	.46	2.7	.22	0				
28			.17	.34	.66	3.5	.19	0				
29			.17	.31	------	3.4	.19	0				
30			.19	.31	------	3.0	.31	0				
31		------	.19	.31	------	2.6	------	0	------			------
TOTAL	0	0	1.44	12.19	27.60	65.61	22.14	2.46	0	0	0	0
MEAN	0	0	.047	.39	.99	2.12	.74	.079	0	0	0	0
MAX	0	0	.19	1.4	3.7	3.5	2.3	.31	0	0	0	0
MIN	0	0	0	.19	.22	.46	.19	0	0	0	0	0
AC-FT	0	0	2.9	24	55	130	44	4.9	0	0	0	0

CAL YR 1972 TOTAL 4.76 MEAN .013 MAX .19 MIN 0 AC-FT 9
WTR YR 1973 TOTAL 131.44 MEAN .36 MAX 3.7 MIN 0 AC-FT 261

PEAK DISCHARGE (BASE, 15 CFS).--No peak above base.

10255850 VALLECITO CREEK NEAR JULIAN, CALIF.

LOCATION.--Lat 32°59'10", long 116°25'10", in SW¼NE¼ sec.1, T.14 S., R.5 E., San Diego County, on right bank 0.2 mile downstream from Cottonwood Wash, and 12.6 miles southeast of Julian.

DRAINAGE AREA.--39.7 sq mi.

PERIOD OF RECORD.--October 1963 to current year.

GAGE.--Water-stage recorder. Altitude of gage is 1,950 ft above mean sea level (from topographic map).

AVERAGE DISCHARGE.--10 years, 0.14 cfs (94 acre-ft per year).

EXTREMES.--Current year: Maximum discharge, 0.48 cfs Nov. 16 (gage height, 1.32 ft); minimum daily, 0.02 cfs Aug. 16 to Sept. 2, Sept. 4-30.
Period of record: Maximum discharge, 434 cfs July 17, 1969 (gage height, 5.82 ft, from high-water mark in well), from rating curve extended above 160 cfs on basis of velocity-area study of maximum flow; no flow at times in some years.

REMARKS.--Records good. No regulation or diversion above station. Precipitation record discontinued Sept. 30, 1972.

DISCHARGE, IN CUBIC FEET PER SECOND, WATER YEAR OCTOBER 1972 TO SEPTEMBER 1973

DAY	OCT	NOV	DEC	JAN	FEB	MAR	APR	MAY	JUN	JUL	AUG	SEP
1	.06	.04	.05	.06	.07	.06	.05	.05	.04	.04	.04	.02
2	.06	.04	.05	.06	.07	.06	.05	.05	.04	.04	.04	.02
3	.06	.04	.05	.06	.07	.06	.05	.05	.04	.04	.03	.03
4	.06	.04	.05	.06	.07	.06	.05	.04	.04	.05	.03	.02
5	.06	.04	.05	.06	.07	.06	.05	.04	.04	.04	.03	.02
6	.05	.04	.05	.05	.07	.06	.04	.05	.04	.04	.03	.02
7	.04	.04	.05	.06	.07	.06	.04	.05	.04	.04	.03	.02
8	.04	.04	.05	.06	.07	.06	.04	.04	.04	.04	.03	.02
9	.04	.04	.05	.06	.07	.06	.04	.04	.04	.05	.03	.02
10	.04	.04	.05	.06	.07	.06	.04	.04	.04	.04	.03	.02
11	.04	.04	.05	.06	.08	.06	.04	.04	.04	.04	.03	.02
12	.04	.04	.06	.06	.07	.06	.04	.04	.04	.04	.03	.02
13	.04	.04	.06	.06	.07	.06	.05	.04	.04	.04	.03	.02
14	.04	.04	.06	.06	.07	.06	.04	.04	.04	.04	.03	.02
15	.04	.04	.06	.06	.07	.06	.04	.05	.04	.04	.03	.02
16	.04	.07	.06	.06	.07	.06	.04	.05	.04	.04	.02	.02
17	.04	.04	.06	.06	.07	.06	.04	.05	.04	.04	.02	.02
18	.04	.04	.06	.06	.07	.06	.04	.05	.04	.04	.02	.02
19	.04	.04	.06	.06	.06	.06	.04	.05	.04	.04	.02	.02
20	.04	.04	.06	.06	.06	.06	.04	.05	.04	.04	.02	.02
21	.04	.04	.06	.06	.06	.06	.04	.05	.04	.04	.02	.02
22	.04	.04	.06	.06	.06	.06	.04	.04	.04	.04	.02	.02
23	.04	.04	.06	.06	.06	.06	.04	.04	.04	.04	.02	.02
24	.04	.04	.06	.06	.06	.06	.04	.04	.04	.04	.02	.02
25	.04	.04	.06	.06	.06	.05	.04	.05	.04	.04	.02	.02
26	.04	.04	.06	.06	.06	.05	.05	.05	.04	.04	.02	.02
27	.04	.04	.06	.06	.06	.05	.05	.05	.04	.04	.02	.02
28	.04	.04	.06	.06	.06	.05	.04	.04	.04	.04	.02	.02
29	.04	.04	.06	.06	------	.05	.05	.04	.04	.04	.02	.02
30	.04	.05	.06	.06	------	.05	.05	.04	.04	.04	.02	.02
31	.04	------	.06	.06	------	.05	------	.04	------	.04	.02	------
TOTAL	1.35	1.24	1.75	1.85	1.87	1.79	1.30	1.39	1.20	1.26	.79	.61
MEAN	.044	.041	.057	.060	.067	.058	.043	.045	.040	.041	.026	.020
MAX	.06	.07	.06	.06	.08	.06	.05	.05	.04	.05	.04	.03
MIN	.04	.04	.05	.05	.06	.05	.04	.04	.04	.04	.02	.02
AC-FT	2.7	2.5	3.5	3.7	3.7	3.6	2.6	2.8	2.4	2.5	1.6	1.2

CAL YR 1972 TOTAL 17.81 MEAN .049 MAX .07 MIN .03 AC-FT 35
WTR YR 1973 TOTAL 16.40 MEAN .045 MAX .08 MIN .02 AC-FT 33

PEAK DISCHARGE (BASE, 15 CFS).--No peak above base.

10255885 SAN FELIPE CREEK NEAR WESTMORLAND, CALIF.

LOCATION.--Lat 33°07'25", long 115°51'08", in NW¼SW¼ sec.17, T.12 S., R.11 E., Imperial County, on left bank 320 ft downstream from U.S. Highway 99, and 14.6 miles northwest of Westmorland.

DRAINAGE AREA.--1,693 sq mi.

PERIOD OF RECORD.--December 1960 to current year.

GAGE.--Water-stage recorder and crest-stage gage. Altitude of gage is 190 ft below mean sea level (from topographic map).

AVERAGE DISCHARGE.--12 years (1961-73), 3.53 cfs (2,560 acre-ft per year).

EXTREMES.--Current year: Maximum discharge, 242 cfs Aug. 4 (gage height, 6.33 ft), from rating curve extended above 5 cfs on basis of slope-area measurements at gage heights 8.23, 9.30, and 12.36 ft; no flow most of year.

Period of record: Maximum discharge, 7,790 cfs Sept. 2, 1967 (gage height, 10.93 ft), from rating curve extended above 6 cfs on basis of slope-area measurements at gage heights 6.56, 10.18, and 10.75 ft; no flow for some months in each year.

REMARKS.--Records poor. No regulation above station. Diversion and pumping for domestic use and irrigation in Borrego Valley 25 miles upstream.

DISCHARGE, IN CUBIC FEET PER SECOND, WATER YEAR OCTOBER 1972 TO SEPTEMBER 1973

DAY	OCT	NOV	DEC	JAN	FEB	MAR	APR	MAY	JUN	JUL	AUG	SEP
1	0		0	.08	.08	.06	.02				0	
2	0		0	.08	.08	.06	.02				0	
3	0		0	.08	.08	.05	.02				.45	
4	0		0	.09	.08	.05	.02				18	
5	2.3		.01	.09	.08	.05	.02				.90	
6	0		.02	.09	.08	.05	.01				0	
7	0		.03	.09	.08	.05	.01				0	
8	0		.04	.09	.08	4.7	.01				0	
9	0		.05	.09	.07	.10	.01				0	
10	0		.06	.09	.07	.04	.01				0	
11	0		.06	.10	.07	.04	0				0	
12	0		.06	.10	.07	.04	0				0	
13	0		.06	.10	.07	.04	0				0	
14	0		.06	.10	.07	.04	0				0	
15	0		.06	.10	.07	.03	0				0	
16	0		.06	.10	.07	.03	0				0	
17	.24		.06	.10	.06	.03	0				0	
18	0		.06	.10	.06	.03	0				0	
19	0		.06	.10	.06	.03	0				0	
20	0		.06	.10	.06	.03	0				0	
21	0		.06	.10	.06	.03	0				0	
22	0		.07	.10	.06	.03	0				0	
23	0		.07	.10	.06	.03	0				0	
24	0		.07	.09	.06	.03	0				0	
25	0		.07	.09	.06	.03	0				0	
26	0		.07	.09	.06	.02	0				0	
27	0		.07	.09	.06	.02	0				0	
28	0		.08	.09	.06	.02	0				0	
29	0		.08	.09	------	.02	0				0	
30	0		.08	.09	------	.02	0				0	
31	0	------	.08	.09	------	.02	------		------		0	------
TOTAL	2.54	0	1.61	2.89	1.92	5.82	.15	0	0	0	19.35	0
MEAN	.082	0	.052	.093	.069	.19	.005	0	0	0	.62	0
MAX	2.3	0	.08	.10	.08	4.7	.02	0	0	0	18	0
MIN	0	0	0	.08	.06	.02	0	0	0	0	0	0
AC-FT	5.0	0	3.2	5.7	3.8	12	.3	0	0	0	38	0

CAL YR 1972 TOTAL 560.75 MEAN 1.53 MAX 422 MIN 0 AC-FT 1,110
WTR YR 1973 TOTAL 34.28 MEAN .09 MAX 18 MIN 0 AC-FT 68

PEAK DISCHARGE (BASE, 200 CFS).--Aug. 4 (1930) 242 cfs (6.33 ft).

NOTE.--No gage-height record Oct. 1 to Aug. 3, Aug. 5 to Sept. 30.

10256000 WHITEWATER RIVER AT WHITE WATER, CALIF.

LOCATION.--Lat 33°56'48", long 116°38'24", in NW¼NW¼NE¼ sec.2, T.3 S., R.3 E., Riverside County, on right bank 1.5 miles north of White Water, and 3.5 miles upstream from San Gorgonio River.
DRAINAGE AREA.--57.4 sq mi.
PERIOD OF RECORD.--October 1948 to current year.
GAGE.--Water-stage recorder on river (supplementary gage used Oct. 1 to Apr. 16); water-stage recorder and Cipolletti weir on diversion 500 ft downstream. Datum of gage is 1,610 ft above mean sea level. Feb. 24, 1950, to Sept. 30, 1952, and Apr. 13, 1960, to June 19, 1968, supplementary gages at different sites and datums within 200 ft of base gage. Since Aug. 12, 1969, supplementary gage at site 1.5 miles downstream at different datum.
AVERAGE DISCHARGE (River only).--25 years, 16.4 cfs (11,920 acre-ft per year).
(Combined river and infiltration line).--24 years (1949-73), 18.0 cfs (13,070 acre-ft per year).
EXTREMES (River only).--Current year: Maximum discharge, 233 cfs Mar. 6, on basis of slope-conveyance measurement; minimum daily, 5.5 cfs Dec. 25-29.
Period of record: Maximum discharge, 24,000 cfs Nov. 22, 1965 (gage height, 13.60 ft), from rating curve extended above 660 cfs on basis of field estimate of maximum flow; no flow at times in some years.
Maximum discharge, 42,000 cfs Mar. 2, 1938, by slope-area measurement of peak flow, at site 2.5 miles upstream (drainage area, 51.4 sq mi).
REMARKS.--Records poor. White Water Mutual Water Co. diverts 50 ft downstream. Diversion was added to flow at supplementary gage to obtain daily discharge for the period Oct. 1, 1972, to Apr. 16, 1973. Monthly discharge is combined with flow from infiltration line that bypasses station. No regulation above station. Water is diverted out of basin about 15 miles upstream to powerplants in San Gorgonio River basin and then to an area north of Banning for irrigation. One small diversion for domestic use and one for irrigation are made 2 to 3 miles upstream. Records of suspended-sediment discharge for the current year are published in Part 2 of this report.
COOPERATION.--Records of bypass in infiltration line furnished by White Water Mutual Water Co.; records of diversion, 15 miles upstream, furnished by Southern California Edison Co.

DISCHARGE, IN CUBIC FEET PER SECOND, WATER YEAR OCTOBER 1972 TO SEPTEMBER 1973

DAY	OCT	NOV	DEC	JAN	FEB	MAR	APR	MAY	JUN	JUL	AUG	SEP
1	8.5	7.7	8.4	5.6	6.4	25	18	24	18	12	12	11
2	8.4	7.7	8.4	5.6	6.3	21	18	23	18	12	12	11
3	8.4	7.7	8.4	5.6	6.3	20	18	24	16	11	12	11
4	8.4	7.7	30	5.6	6.2	30	18	26	17	11	13	11
5	8.4	7.7	11	5.6	6.2	20	18	25	16	9.8	13	10
6	8.3	7.7	12	5.6	8.8	30	18	25	16	10	13	10
7	8.3	7.8	11	5.6	7.0	50	19	25	14	9.7	12	10
8	8.3	7.8	10	5.6	7.0	30	19	25	13	10	11	10
9	8.3	7.8	9.0	5.8	7.0	28	20	24	13	11	11	10
10	8.2	8.2	8.4	6.0	7.0	20	22	23	13	11	11	11
11	8.2	13	7.7	6.2	40	25	25	20	14	11	11	11
12	8.2	10	7.0	6.2	10	30	27	27	14	11	11	11
13	8.2	14	6.6	6.2	15	30	28	23	14	11	12	11
14	8.1	20	6.3	6.2	11	25	27	21	15	12	12	11
15	8.1	15	6.1	6.3	9.0	60	20	22	15	11	11	10
16	8.0	25	6.0	9.0	8.6	35	18	23	15	12	11	10
17	8.0	12	5.9	14	8.0	30	21	22	15	11	11	11
18	8.0	11	5.9	7.4	7.7	25	21	21	16	11	11	10
19	8.0	10	5.8	22	7.5	21	25	20	16	11	11	11
20	11	9.5	5.7	10	7.3	20	22	21	15	10	12	11
21	8.6	9.4	5.6	8.8	7.2	40	23	20	14	11	12	12
22	8.3	9.1	5.6	7.8	7.0	20	22	21	14	11	12	11
23	8.1	9.0	5.6	7.3	6.8	25	25	20	14	11	9.9	11
24	8.0	8.9	5.6	7.0	6.7	22	29	17	15	11	10	11
25	7.8	8.8	5.5	6.8	6.7	21	27	17	14	12	11	11
26	7.8	8.7	5.5	6.6	6.7	20	27	18	14	12	12	11
27	7.7	8.7	5.5	6.6	7.0	20	26	20	14	13	12	11
28	7.7	8.6	5.5	6.5	35	20	26	18	13	12	11	12
29	7.7	8.5	5.5	6.4	------	26	26	18	13	12	11	13
30	7.6	8.4	5.6	6.4	------	21	25	17	12	11	11	12
31	7.6	------	5.6	6.4	------	19	------	18	------	10	11	------
TOTAL	254.2	305.4	240.7	226.7	275.4	829	678	668	440	344.5	355.9	327
MEAN	8.20	10.2	7.76	7.31	9.84	26.7	22.6	21.5	14.7	11.1	11.5	10.9
MAX	11	25	30	22	40	60	29	27	18	13	13	13
MIN	7.6	7.7	5.5	5.6	6.2	19	18	17	12	9.7	9.9	10
AC-FT	504	606	477	450	546	1,640	1,340	1,320	873	683	706	649
(a)	551	667	539	518	608	1,710	1,410	1,390	941	754	776	719
(b)	81	68	74	66	73	84	159	299	263	236	205	176

CAL YR 1972 TOTAL 3,106.5 MEAN 8.49 MAX 30 MIN 5.5 AC-FT 6,160 AC-FT a 6,760
WTR YR 1973 TOTAL 4,944.8 MEAN 13.5 MAX 60 MIN 5.5 AC-FT 9,810 AC-FT a 10,600

PEAK DISCHARGE (BASE, 100 CFS).--Mar. 6 (time unknown) 233 cfs (ac-ft unknown).

a Combined discharge, in acre-feet, of river and infiltration line.
b Discharge, in acre-feet, diverted from basin 15 miles upstream.
NOTE.--Stage-discharge relation indefinite at supplementary gage Oct. 1 to Apr. 16.

10256400 SAN GORGONIO RIVER NEAR WHITE WATER, CALIF.

LOCATION.--Lat 33°55'14", long 116°41'45", in NW¼SE¼SW¼ sec.8, T.3 S., R.3 E., Riverside County, on right bank 0.2 mile south of Interstate Highway 10, and 3.4 miles west of town of White Water.

DRAINAGE AREA.--154 sq mi.

PERIOD OF RECORD.--February 1966 to current year.

GAGE.--Water-stage recorder. Altitude of gage is 1,320 ft (from topographic map). Prior to Mar. 19, 1968, flood-hydrograph recorder.

AVERAGE DISCHARGE.--7 years, 1.84 cfs (1,330 acre-ft per year).

EXTREMES.--Current year: Maximum discharge, 270 cfs Feb. 13 (gage height, 2.95 ft), on basis of slope-conveyance measurement of maximum flow; no flow most of year.
Period of record: Maximum discharge, 7,250 cfs Jan. 25, 1969 (gage height, 6.0 ft, from floodmarks), on basis of slope-area measurement of maximum flow; no flow most of each year.
Flood of Nov. 23, 1965, reached a stage of 6.10 ft, from floodmarks (discharge, 4,500 cfs on basis of slope-area measurement).

REMARKS.--Records poor. No regulation or diversion above station.

DISCHARGE, IN CUBIC FEET PER SECOND, WATER YEAR OCTOBER 1972 TO SEPTEMBER 1973

DAY	OCT	NOV	DEC	JAN	FEB	MAR	APR	MAY	JUN	JUL	AUG	SEP
1		0	0	0	0	0						
2		0	0	0	0	0						
3		0	0	0	0	0						
4		0	2.8	0	0	0						
5		0	0	0	0	0						
6		0	0	0	0	0						
7		0	0	0	0	.55						
8		0	0	0	0	1.2						
9		0	0	0	0	0						
10		0	0	0	0	0						
11		0	0	0	9.5	1.2						
12		0	0	0	0	0						
13		0	0	0	8.2	0						
14		.07	0	0	0	0						
15		0	0	0	0	0						
16		4.6	0	0	0	0						
17		0	0	0	0	0						
18		0	0	0	0	0						
19		0	0	.04	0	0						
20		0	0	0	0	0						
21		0	0	0	0	0						
22		0	0	0	0	.30						
23		0	0	0	0	0						
24		0	0	0	0	0						
25		0	0	0	0	0						
26		0	0	0	0	0						
27		0	0	0	0	0						
28		0	0	0	0	0						
29		0	0	0	------	0						
30		0	0	0	------	0						
31		------	0	0	------	0	------		------			------
TOTAL	0	4.67	2.8	.04	17.7	3.25	0	0	0	0	0	0
MEAN	0	.16	.090	.001	.63	.10	0	0	0	0	0	0
MAX	0	4.6	2.8	.04	9.5	1.2	0	0	0	0	0	0
MIN	0	0	0	0	0	0	0	0	0	0	0	0
AC-FT	0	9.3	5.6	.08	35	6.4	0	0	0	0	0	0

CAL YR 1972	TOTAL 7.47	MEAN .020	MAX 4.6	MIN 0	AC-FT 15
WTR YR 1973	TOTAL 28.46	MEAN .078	MAX 9.5	MIN 0	AC-FT 56

PEAK DISCHARGE (BASE, 50 CFS)

DATE	TIME	G.H.	DISCHARGE	DATE	TIME	G.H.	DISCHARGE
11-16	1800	2.04	109	2-11	1115	2.45	185
12-4	unknown	1.90	66	2-13	0545	2.95	270

10256500 SNOW CREEK NEAR WHITE WATER, CALIF.

LOCATION.--Lat 33°52'14", long 116°40'49", in SE¼NW¼NW¼ sec.33, T.3 S., R.3 E., Riverside County, on left bank 300 ft upstream from Southern Pacific Railroad diversion dam, 300 ft downstream from East Fork, 2.5 miles upstream from mouth, and 4.4 miles southwest of White Water.

DRAINAGE AREA.--10.8 sq mi.

PERIOD OF RECORD.--July to December 1921, May 1922 to February 1927, December 1927 to September 1931, October 1959 to current year. Yearly discharge only for 1930, published in WSP 1314.

GAGE.--Water-stage recorder. Altitude of gage is 2,000 ft (from topographic map). Prior to September 1931, at various sites within 500 ft of present site at different datums. September 1931 to Oct. 6, 1970, at site 250 ft downstream at datum 15.9 ft lower.

AVERAGE DISCHARGE.--21 years (1922-26, 1928-31, 1959-73), 8.40 cfs (6,090 acre-ft per year).

EXTREMES.--Current year: Maximum discharge, 128 cfs Dec. 4 (gage height, 17.58 ft); minimum daily, 2.5 cfs Oct. 16.
Period of record: Maximum discharge, 13,000 cfs Jan. 25, 1969 (gage height, 27.4 ft, from floodmarks, present datum), from rating curve extended above 55 cfs on basis of slope-area measurement of maximum flow; minimum daily, 2.1 cfs June 23-27, Sept. 5-11, 1961.

REMARKS.--Records fair. No regulation or diversion above station. Palm Springs Water Company diverts 50 ft downstream, generally taking the entire base flow.

DISCHARGE, IN CUBIC FEET PER SECOND, WATER YEAR OCTOBER 1972 TO SEPTEMBER 1973

DAY	OCT	NOV	DEC	JAN	FEB	MAR	APR	MAY	JUN	JUL	AUG	SEP
1	2.8	2.7	4.3	4.9	4.7	6.8	6.8	14	17	6.1	4.1	3.6
2	3.0	2.7	4.3	5.2	4.6	6.6	6.8	14	16	6.1	4.5	3.8
3	3.0	2.7	4.9	5.1	4.5	6.4	6.8	14	15	6.1	4.8	3.7
4	3.0	3.0	29	5.0	4.4	9.4	6.4	15	14	6.1	5.0	3.7
5	3.0	3.2	10	4.9	4.4	9.0	6.0	15	13	6.1	4.7	3.7
6	3.0	3.2	7.6	4.8	5.4	7.4	6.8	13	12	6.4	4.3	3.7
7	2.8	3.1	7.3	4.7	5.4	18	7.6	14	12	6.1	4.0	3.6
8	2.8	3.2	7.4	4.6	5.2	14	8.4	16	12	5.8	3.8	3.4
9	2.8	3.3	6.7	4.5	4.9	15	8.6	20	12	5.6	3.8	3.5
10	2.9	3.3	6.2	5.8	4.9	12	9.2	26	10	5.5	3.8	3.7
11	2.9	5.1	5.4	5.3	21	15	10	24	10	5.6	3.8	3.6
12	2.8	4.5	4.9	5.1	14	14	12	25	9.6	5.7	3.7	3.6
13	2.8	3.7	4.9	4.9	14	13	14	24	9.0	5.5	3.7	3.5
14	2.9	4.2	4.9	4.7	9.6	12	13	24	8.6	5.3	4.4	3.5
15	2.7	4.3	4.9	4.5	8.8	10	11	23	8.4	5.1	4.3	3.5
16	2.5	6.6	4.9	4.3	7.2	9.6	10	22	8.0	5.1	4.2	3.5
17	2.8	5.7	4.9	4.3	6.8	8.8	12	23	7.8	4.9	4.2	3.5
18	2.9	4.3	4.9	4.3	6.4	8.8	13	24	7.6	4.9	4.3	3.6
19	3.0	4.0	4.9	7.3	6.0	8.8	12	25	7.3	4.9	4.0	3.6
20	3.1	3.8	4.9	13	5.7	10	12	25	7.0	4.9	4.1	3.6
21	3.1	3.5	4.9	21	5.8	8.9	10	24	6.8	4.8	4.1	3.7
22	2.9	3.2	5.2	11	5.7	10	9.6	23	7.1	4.8	3.9	3.7
23	2.8	3.2	5.4	8.4	5.6	8.8	11	21	7.1	4.6	3.7	3.7
24	2.7	3.0	5.2	7.6	5.5	8.5	13	21	6.8	4.4	3.7	3.7
25	2.8	3.0	5.2	6.4	5.5	8.1	19	22	6.8	4.3	3.8	3.7
26	2.9	3.2	5.4	5.7	5.2	7.6	22	23	6.8	4.2	3.6	3.8
27	3.0	4.3	5.2	5.4	5.1	8.0	24	23	6.7	4.3	3.7	3.8
28	3.0	4.6	5.2	5.2	5.0	7.6	24	22	6.7	4.3	3.6	3.7
29	2.8	4.6	5.2	4.9	------	6.8	22	21	6.4	4.1	3.5	3.7
30	2.7	4.3	4.9	4.8	------	7.2	19	19	6.2	4.4	3.7	3.7
31	2.7	------	5.2	4.8	------	7.2	------	18	------	4.2	3.6	------
TOTAL	88.9	113.5	194.2	192.4	191.3	303.3	366.0	637	283.7	160.2	124.4	109.1
MEAN	2.87	3.78	6.26	6.21	6.83	9.78	12.2	20.5	9.46	5.17	4.01	3.64
MAX	3.1	6.6	29	21	21	18	24	26	17	6.4	5.0	3.8
MIN	2.5	2.7	4.3	4.3	4.4	6.4	6.0	13	6.2	4.1	3.5	3.4
AC-FT	176	225	385	382	379	602	726	1,260	563	318	247	216

CAL YR 1972 TOTAL 1,624.1 MEAN 4.44 MAX 29 MIN 2.4 AC-FT 3,220
WTR YR 1973 TOTAL 2,764.0 MEAN 7.57 MAX 29 MIN 2.5 AC-FT 5,480

PEAK DISCHARGE (BASE, 50 CFS)

DATE	TIME	G.H.	DISCHARGE	DATE	TIME	G.H.	DISCHARGE
12-4	0930	17.58	128	2-11	1545	17.22	54
1-21	0900	17.21	52				

10257600 MISSION CREEK NEAR DESERT HOT SPRINGS, CALIF.

LOCATION.--Lat 34°00'40", long 116°37'38", in NE¼SW¼ sec.12, T.2 S., R.3 E., Riverside County, in Mission Creek Indian Reservation, 0.6 mile downstream from West Fork, and 6.8 miles northwest of Desert Hot Springs.

DRAINAGE AREA.--35.7 sq mi.

PERIOD OF RECORD.--October 1967 to current year.

GAGE.--Water-stage recorder with rain-gage attachment. Altitude of gage is 2,400 ft (from topographic map).

AVERAGE DISCHARGE.--6 years, 2.40 cfs (1,740 acre-ft per year).

EXTREMES.--Current year: Maximum discharge, 1.3 cfs Mar. 11 (gage height, 2.16 ft); no flow for several months. Period of record: Maximum discharge, 1,660 cfs Jan. 25, 1969 (gage height, 6.40 ft), on basis of slope-area measurement of maximum flow; no flow for much of most years.

REMARKS.--Records good. Slight regulation of low flow by two small dams with a combined capacity of about three acre-ft two miles above station.

DISCHARGE, IN CUBIC FEET PER SECOND, WATER YEAR OCTOBER 1972 TO SEPTEMBER 1973

DAY	OCT	NOV	DEC	JAN	FEB	MAR	APR	MAY	JUN	JUL	AUG	SEP
1		0	0		0	.45	.49	.45				
2		0	0		0	.41	.45	.41				
3		0	0		0	.41	.90	.37				
4		0	.07		0	.49	.90	.37				
5		0	.04		0	.49	.90	.37				
6		0	0		0	.67	.90	.37				
7		0	0		0	.97	.78	.31				
8		0	.04		0	.97	.84	.28				
9		0	0		0	.97	.84	.25				
10		0	0		0	.97	.84	.17				
11		0	0		.22	1.0	.67	.15				
12		0	0		.28	.97	.72	.10				
13		0	0		.26	.97	.72	.03				
14		0	0		.22	.97	.72	.02				
15		0	0		.17	.97	.67	.02				
16		.04	0		.16	.97	.72	0				
17		.08	0		.16	.97	.67	0				
18		0	0		.18	.97	.72	0				
19		0	0		.19	.97	.67	0				
20		0	0		.28	.97	.72	0				
21		0	0		.28	.97	.67	0				
22		0	0		.26	.90	.67	0				
23		0	0		.21	.90	.57	0				
24		0	0		.15	.90	.62	0				
25		0	0		.19	.90	.57	0				
26		0	0		.21	.90	.53	0				
27		0	0		.20	.90	.45	0				
28		0	0		.49	.90	.45	0				
29		0	0		------	.90	.45	0				
30		0	0		------	.90	.53	0				
31		------	0		------	.90	------	0	------			------
TOTAL	0	.12	.15	0	4.11	26.50	20.35	3.67	0	0	0	0
MEAN	0	.004	.005	0	.15	.85	.68	.12	0	0	0	0
MAX	0	.08	.07	0	.49	1.0	.90	.45	0	0	0	0
MIN	0	0	0	0	0	.41	.45	0	0	0	0	0
AC-FT	0	.2	.3	0	8.2	53	40	7.3	0	0	0	0
(a)	0	2.1	.8	1.0	2.0	1.9	0	0	.2	0	0	0

CAL YR 1972 TOTAL 20.56 MEAN .056 MAX .77 MIN 0 AC-FT 41
WTR YR 1973 TOTAL 54.90 MEAN .15 MAX 1.0 MIN 0 AC-FT 109

PEAK DISCHARGE (BASE, 50 CFS).--No peak above base.

a Precipitation, in inches.

10258000 TAHQUITZ CREEK NEAR PALM SPRINGS, CALIF.

LOCATION.--Lat 33°48'18", long 116°33'30", in NE¼SW¼SW¼ sec.22, T.4 S., R.4 E., Riverside County, on left bank 2.2 miles southwest of Palm Springs, and 7 miles upstream from mouth.

DRAINAGE AREA.--16.8 sq mi.

PERIOD OF RECORD.--October 1947 to current year.

GAGE.--Water-stage recorder. Datum of gage is 762.5 ft above mean sea level (levels by Riverside County Flood Control District). Prior to Aug. 25, 1970, at datum 2.00 ft higher.

AVERAGE DISCHARGE.--26 years, 3.92 cfs (2,840 acre-ft per year).

EXTREMES.--Current year: Maximum discharge, 30 cfs May 19 (gage height, 5.26 ft); no flow Oct. 1 to Nov. 10, Sept. 11-30.
Period of record: Maximum discharge, 2,900 cfs Nov. 22, 1965, Jan. 25, 1969 (gage height, 12.34 ft, present datum), from rating curve extended above 80 cfs on basis of slope-area measurements at gage heights 8.45 and 10.34 ft; no flow for parts of each year.

REMARKS.--Records poor. No regulation or diversion above station.

DISCHARGE, IN CUBIC FEET PER SECOND, WATER YEAR OCTOBER 1972 TO SEPTEMBER 1973

DAY	OCT	NOV	DEC	JAN	FEB	MAR	APR	MAY	JUN	JUL	AUG	SEP
1		0	.17	.61	.81	.64	1.5	12	22	4.5	1.1	.17
2		0	.16	.60	.77	.75	1.5	12	21	4.3	1.0	.16
3		0	.16	.64	.76	.91	1.5	13	20	4.1	.98	.15
4		0	.48	.64	.75	1.1	1.7	15	19	3.8	.94	.13
5		0	1.3	.64	.73	1.1	1.7	15	19	3.4	.91	.12
6		0	.92	.64	.73	1.1	1.7	13	18	3.3	.86	.11
7		0	.54	.62	.74	2.0	3.6	14	17	3.0	.83	.10
8		0	1.1	.64	.76	2.0	5.6	16	16	2.8	.79	.07
9		0	5.2	.66	.73	3.1	5.8	19	15	2.5	.75	.04
10		0	1.8	.66	.70	1.8	6.0	21	15	2.1	.72	.01
11		1.0	1.0	.66	6.7	1.6	7.0	23	14	1.8	.68	0
12		.70	.80	.66	1.9	1.4	7.6	23	13	1.8	.65	0
13		.35	.72	.66	1.4	1.2	7.7	23	12	1.8	.62	0
14		.25	.64	.68	.94	1.8	7.8	24	12	1.8	.59	0
15		.25	.60	.72	.83	1.5	7.0	25	11	1.7	.55	0
16		4.0	.58	.74	.77	1.3	6.9	24	10	1.7	.52	0
17		6.0	.56	.74	.72	1.3	7.7	25	9.6	1.7	.50	0
18		2.8	.56	.76	.70	1.3	8.7	26	9.0	1.6	.47	0
19		1.0	.54	.78	.69	1.3	8.6	27	8.4	1.6	.44	0
20		.52	.55	1.0	.68	1.3	8.5	27	8.1	1.6	.41	0
21		.43	.66	1.2	.69	1.3	7.8	26	7.6	1.5	.38	0
22		.32	.74	1.2	.68	1.3	7.8	24	7.3	1.5	.36	0
23		.26	.78	1.1	.66	1.4	8.3	23	6.9	1.4	.34	0
24		.24	.74	1.1	.62	1.4	9.6	23	6.5	1.4	.32	0
25		.22	.66	1.0	.59	1.4	11	24	5.9	1.3	.30	0
26		.21	.64	.98	.56	1.4	13	26	5.7	1.3	.27	0
27		.20	.60	.95	.55	1.4	14	26	5.3	1.3	.25	0
28		.19	.58	.92	.60	1.4	13	25	4.9	1.2	.23	0
29		.18	.58	.90	------	1.5	13	24	5.0	1.2	.22	0
30		.17	.58	.88	------	1.5	12	24	4.8	1.1	.20	0
31		------	.60	.85	------	1.5	------	23	------	1.1	.19	------
TOTAL	0	19.29	25.54	24.83	27.76	44.00	217.6	665	349.0	65.2	17.37	1.06
MEAN	0	.64	.82	.80	.99	1.42	7.25	21.5	11.6	2.10	.56	.035
MAX	0	6.0	5.2	1.2	6.7	3.1	14	27	22	4.5	1.1	.17
MIN	0	0	.16	.60	.55	.64	1.5	12	4.8	1.1	.19	0
AC-FT	0	38	51	49	55	87	432	1,320	692	129	34	2.1

CAL YR 1972 TOTAL 200.12 MEAN .55 MAX 6.0 MIN 0 AC-FT 397
WTR YR 1973 TOTAL 1,456.65 MEAN 3.99 MAX 27 MIN 0 AC-FT 2,890

PEAK DISCHARGE (BASE, 50 CFS).--No peak above base.

10258100 PALM CANYON CREEK TRIBUTARY NEAR ANZA, CALIF.

LOCATION.--Lat 33°34'08", long 116°30'43", in SW¼NE¼NW¼ sec.18, T.7 S., R.5 E., Riverside County, in San Bernardino National Forest, on left bank at culvert on State Highway 74, or Pines to Palms Highway, and 9.4 miles east of Anza.

DRAINAGE AREA.--0.47 sq mi.

PERIOD OF RECORD.--Water years 1962-67 (annual maximum), February 1967 to September 1973 (discontinued).

GAGE.--Water-stage recorder with rain-gage attachment and crest-stage gage. Altitude of gage is 4,500 ft (from topographic map). Nov. 8, 1961, to Feb. 15, 1967, crest-stage gage only at same site and datum.

AVERAGE DISCHARGE.--6 years, 0.003 cfs (2.2 acre-ft per year).

EXTREMES.--Current year: Maximum discharge, 6.5 cfs Nov. 16 (gage height, 5.00 ft); no flow most of year. Period of record: Maximum discharge, 28 cfs Aug. 30, 1967 (gage height, 6.23 ft, 5.92 ft from crest-stage gage), on basis of computation of maximum flow through culvert; no flow most of each year.

REMARKS.--No regulation or diversion above station.

DISCHARGE, IN CUBIC FEET PER SECOND, WATER YEAR OCTOBER 1972 TO SEPTEMBER 1973

DAY	OCT	NOV	DEC	JAN	FEB	MAR	APR	MAY	JUN	JUL	AUG	SEP
1	0	0			0	0						
2	0	0			0	0						
3	0	0			0	0						
4	0	0			0	0						
5	0	0			0	0						
6	0	0			0	0						
7	0	0			0	0						
8	0	0			0	0						
9	0	0			0	0						
10	0	0			0	0						
11	0	.03			.69	.16						
12	0	0			.19	0						
13	0	0			.01	0						
14	0	.05			0	0						
15	0	0			0	0						
16	0	.16			0	0						
17	0	0			0	0						
18	0	0			0	0						
19	0	0			0	0						
20	.15	0			0	0						
21	0	0			0	0						
22	0	0			0	0						
23	0	0			0	0						
24	0	0			0	0						
25	0	0			0	0						
26	0	0			0	0						
27	0	0			0	0						
28	0	0			0	0						
29	0	0			------	0						
30	0	0			------	0						
31	0	------			------	0	------		------			------
TOTAL	.15	.24	0	0	.89	.16	0	0	0	0	0	0
MEAN	.005	.008	0	0	.032	.005	0	0	0	0	0	0
MAX	.15	.16	0	0	.69	.16	0	0	0	0	0	0
MIN	0	0	0	0	0	0	0	0	0	0	0	0
AC-FT	.3	.5	0	0	1.8	.3	0	0	0	0	0	0
(a)	1.1	2.4	1.5	1.5	3.1	3.2	.1	0	0	0	8	0

CAL YR 1972 TOTAL 0.39 MEAN .0010 MAX .16 MIN 0 AC-FT .8
WTR YR 1973 TOTAL 1.44 MEAN .0040 MAX .69 MIN 0 AC-FT 2.9

a Precipitation, in inches.

10258500 PALM CANYON CREEK NEAR PALM SPRINGS, CALIF.

LOCATION.--Lat 33°44'42", long 116°32'05", in NE¼SW¼SE¼ sec.11, T.5 S., R.4 E., Riverside County, on right bank 0.8 mile upstream from Murray Canyon Creek, and 6 miles south of Palm Springs.

DRAINAGE AREA.--93.3 sq mi.

PERIOD OF RECORD.--January 1930 to January 1942, October 1947 to current year.

GAGE.--Water-stage recorder. Altitude of gage is 700 ft (from topographic map). Prior to Jan. 14, 1942, at datum 0.2 ft higher.

AVERAGE DISCHARGE.--37 years (1930-41, 1947-73), 3.42 cfs (2,480 acre-ft per year).

EXTREMES.--Current year: Maximum discharge, 206 cfs Feb. 11 (gage height, 2.96 ft); no flow for several months. Period of record: Maximum discharge, 3,850 cfs Feb. 6, 1937 (gage height, 5.80 ft, present datum), from rating curve extended above 120 cfs on basis of velocity-area measurement of maximum flow; no flow for several months in most years.

REMARKS.--Records good. No regulation or diversion above station.

DISCHARGE, IN CUBIC FEET PER SECOND, WATER YEAR OCTOBER 1972 TO SEPTEMBER 1973

DAY	OCT	NOV	DEC	JAN	FEB	MAR	APR	MAY	JUN	JUL	AUG	SEP
1		0		0	.13	2.7	4.1	.80				
2		0		0	.13	2.2	4.1	.68				
3		0		0	.13	2.0	3.8	.57				
4		0		0	.10	2.0	3.5	.57				
5		0		0	.13	1.8	3.5	.57				
6		0		0	.22	1.8	3.2	.57				
7		0		0	.33	3.8	3.0	.48				
8		0		0	.27	4.1	2.7	.40				
9		0		0	.27	12	2.7	.33				
10		0		0	.27	6.3	2.5	.27				
11		0		0	64	7.5	2.2	.22				
12		0		0	37	11	2.2	.22				
13		0		0	23	8.7	2.2	.17				
14		0		0	11	11	2.2	.17				
15		0		0	7.6	7.2	2.0	.13				
16		0		0	5.5	6.3	2.0	.10				
17		.87		.09	4.1	5.5	1.8	.06				
18		0		.11	3.2	5.1	2.0	.03				
19		0		8.8	2.7	4.4	1.8	.02				
20		0		2.5	2.5	7.0	1.6	.02				
21		0		1.2	2.2	8.1	1.4	.01				
22		0		.68	2.0	13	1.4	.01				
23		0		.48	2.0	8.1	1.2	0				
24		0		.40	1.6	6.3	1.2	0				
25		0		.33	1.4	5.5	1.1	0				
26		0		.33	1.4	5.1	.93	0				
27		0		.22	1.4	5.1	.80	0				
28		0		.22	2.2	5.5	.80	0				
29		0		.22	------	6.7	.80	0				
30		0		.22	------	5.1	.93	0				
31		------		.17	------	4.8	------	0	------			------
TOTAL	0	.87	0	15.97	176.78	185.7	63.66	6.40	0	0	0	0
MEAN	0	.029	0	.52	6.31	5.99	2.12	.21	0	0	0	0
MAX	0	.87	0	8.8	64	13	4.1	.80	0	0	0	0
MIN	0	0	0	0	.10	1.8	.80	0	0	0	0	0
AC-FT	0	1.7	0	32	351	368	126	13	0	0	0	0

CAL YR 1972 TOTAL 0.87 MEAN .00 MAX .8 MIN 0 AC-FT 1
WTR YR 1973 TOTAL 449.38 MEAN 1.23 MAX 64 MIN 0 AC-FT 891

PEAK DISCHARGE (BASE, 100 CFS).--Feb. 11 (2015) 206 cfs (2.96 ft).

10259000 ANDREAS CREEK NEAR PALM SPRINGS, CALIF.

LOCATION.--Lat 33°45'36", long 116°32'57", in NW¼SE¼SE¼ sec.3, T.5 S., R.4 E., Riverside County, on left bank at Bureau of Indian Affairs diversion dam, 1.1 miles above mouth, and 5.1 miles south of Palm Springs.

DRAINAGE AREA.--8.61 sq mi.

PERIOD OF RECORD.--October 1948 to current year.

GAGE.--Water-stage recorder and concrete control. Altitude of gage is 800 ft (from topographic map). Prior to Mar. 25, 1949, reference point at same site at different datum.

AVERAGE DISCHARGE.--25 years, 2.14 cfs (1,550 acre-ft per year).

EXTREMES.--Current year: Maximum discharge, 23 cfs Dec. 4 (gage height, 1.79 ft); minimum daily, 0.31 cfs Oct. 1.
Period of record: Maximum discharge, 1,960 cfs Aug. 31, 1954 (gage height, 7.11 ft), from rating curve extended above 80 cfs on basis of slope-area measurement of maximum flow; no flow at times in some years.

REMARKS.--Records fair. No regulation above station. One small diversion for domestic use about one mile above station.

DISCHARGE, IN CUBIC FEET PER SECOND, WATER YEAR OCTOBER 1972 TO SEPTEMBER 1973

DAY	OCT	NOV	DEC	JAN	FEB	MAR	APR	MAY	JUN	JUL	AUG	SEP
1	.31	1.3	1.1	1.3	1.8	2.6	3.8	3.7	1.8	.96	.78	.68
2	.38	1.3	1.1	1.3	1.8	2.3	3.3	3.5	1.8	.92	.80	.69
3	.52	1.3	1.1	1.4	1.8	2.4	3.2	3.6	1.8	.94	.86	.56
4	.55	1.2	4.5	1.6	1.8	2.7	3.3	3.8	1.8	.91	1.5	.55
5	.57	1.3	1.3	1.6	1.8	2.7	3.1	4.1	1.6	.89	1.3	.57
6	.58	1.3	1.2	1.6	1.8	3.3	3.1	3.5	1.7	.80	.92	.52
7	.71	1.3	1.2	1.6	1.8	3.8	3.4	3.1	1.7	.83	.90	.44
8	.68	1.4	1.2	1.6	1.8	2.9	3.5	3.3	1.6	.86	.82	.45
9	.73	1.4	1.2	1.7	1.8	3.3	3.6	3.3	1.6	.82	.68	.50
10	.77	1.4	1.8	1.8	1.8	2.8	3.3	3.3	1.6	.74	.65	.63
11	.74	2.1	1.4	1.8	7.6	3.5	3.7	3.1	1.5	.73	.64	.63
12	.80	1.9	1.4	1.8	2.5	2.9	4.2	2.9	1.5	.81	.64	.56
13	.80	1.7	1.2	1.8	2.3	4.2	4.5	2.5	1.5	.85	.64	.57
14	.75	1.8	1.1	1.8	2.0	4.9	4.4	2.3	1.5	.93	.64	.63
15	.76	1.7	1.1	1.8	2.0	4.1	4.1	2.4	1.6	.90	.65	.59
16	.69	3.3	1.1	2.2	2.0	3.8	4.6	2.4	1.6	.89	.66	.56
17	.80	1.4	1.2	6.3	2.2	3.6	4.8	2.3	1.6	.65	.68	.56
18	.85	1.0	1.4	3.1	2.2	3.4	5.2	2.3	1.5	.62	.70	.45
19	.85	1.0	1.8	6.0	2.2	3.1	4.5	2.1	1.3	.58	.89	.47
20	.85	1.2	1.7	2.6	2.2	4.3	3.5	2.0	1.3	.56	1.0	.53
21	.86	1.3	1.3	1.9	2.2	4.1	3.1	1.7	1.2	.54	1.1	.54
22	.98	1.2	1.4	1.8	2.2	4.8	3.1	1.8	1.2	.55	.82	.56
23	.95	1.2	1.5	1.8	2.2	2.9	3.3	1.9	1.2	.56	.72	.62
24	.93	1.2	1.6	2.0	2.2	2.7	3.7	1.9	1.2	.56	.77	.63
25	.85	1.2	1.6	1.9	2.2	3.2	4.4	1.9	1.2	.53	.81	.57
26	.89	1.2	1.6	1.9	2.1	4.0	4.5	1.9	1.2	.56	.93	.53
27	.98	1.1	1.5	1.8	2.1	4.1	4.2	1.9	1.1	.73	.98	.54
28	.98	1.1	1.3	1.8	3.0	4.0	4.3	1.8	.92	.69	.82	.48
29	.98	1.2	1.4	1.8	------	4.0	4.6	1.7	1.0	.74	.74	.44
30	.98	1.2	1.6	1.8	------	4.0	4.2	1.8	1.0	.93	.67	.42
31	1.2	------	1.5	1.8	------	4.0	------	1.8	------	.89	.66	------
TOTAL	24.27	42.2	45.4	65.0	63.4	108.4	116.5	79.6	43.12	23.47	25.37	16.47
MEAN	.78	1.41	1.46	2.10	2.26	3.50	3.88	2.57	1.44	.76	.82	.55
MAX	1.2	3.3	4.5	6.3	7.6	4.9	5.2	4.1	1.8	.96	1.5	.69
MIN	.31	1.0	1.1	1.3	1.8	2.3	3.1	1.7	.92	.53	.64	.42
AC-FT	48	84	90	129	126	215	231	158	86	47	50	33

CAL YR 1972 TOTAL 385.42 MEAN 1.05 MAX 4.5 MIN .09 AC-FT 764
WTR YR 1973 TOTAL 653.20 MEAN 1.79 MAX 7.6 MIN .31 AC-FT 1,300

PEAK DISCHARGE (BASE, 30 CFS).--No peak above base.

10259200 DEEP CREEK NEAR PALM DESERT, CALIF.

LOCATION.--Lat 33°37'52", long 116°23'29", in SE¼NE¼SE¼ sec.19, T.6 S., R.6 E., Riverside County, on left bank 500 ft downstream from unnamed tributary, and 6.3 miles south of Palm Desert.

DRAINAGE AREA.--30.6 sq mi.

PERIOD OF RECORD.--May 1962 to current year.

GAGE.--Water-stage recorder. Altitude of gage is 1,440 ft (from topographic map).

AVERAGE DISCHARGE.--11 years, 0.56 cfs (406 acre-ft per year).

EXTREMES.--Current year: Maximum discharge, 244 cfs Aug. 2 (gage height, 3.73 ft), from rating curve extended above 3.3 cfs on basis of slope-area measurements at gage heights 2.68 and 5.15 ft; no flow part of year.
Period of record: Maximum discharge, 1,300 cfs Nov. 23, 1965 (gage height, 5.15 ft in gage well, 6.15 ft, from profile of floodmarks), from rating curve extended above 3.3 cfs on basis of slope-area measurements at gage heights 2.68 and 5.15 ft; no flow for much of each year.

REMARKS.--Records good. No regulation or diversion above station.

DISCHARGE, IN CUBIC FEET PER SECOND, WATER YEAR OCTOBER 1972 TO SEPTEMBER 1973

DAY	OCT	NOV	DEC	JAN	FEB	MAR	APR	MAY	JUN	JUL	AUG	SEP
1		0			0	.80	.56	.48	.04		0	
2		0			0	.80	.52	.40	.04		8.8	
3		0			0	.56	.52	.33	.03		2.3	
4		0			0	.52	.52	.30	.03		.12	
5		0			0	.44	.52	.30	.03		0	
6		0			0	.44	.52	.30	.02		0	
7		0			0	.48	.48	.27	.02		0	
8		0			0	.91	.56	.24	.02		0	
9		0			0	2.0	.65	.21	.01		0	
10		0			0	2.1	.65	.21	.01		0	
11		0			2.2	2.5	.75	.19	0		0	
12		0			3.9	3.3	.86	.19	.01		0	
13		0			2.0	2.3	1.0	.19	0		0	
14		0			1.4	1.9	1.0	.15	0		0	
15		0			1.0	1.5	.80	.17	0		0	
16		.01			.80	1.2	.65	.15	0		5.0	
17		0			.70	1.0	.60	.15	0		.37	
18		0			.60	.92	.70	.13	0		0	
19		0			.52	.80	.70	.11	0		0	
20		0			.44	1.0	.65	.09	0		0	
21		0			.52	.98	.56	.09	0		0	
22		0			.56	.92	.52	.09	0		0	
23		0			.60	.86	.48	.07	0		0	
24		0			.65	.80	.48	.07	0		0	
25		0			.65	.75	.52	.07	0		0	
26		0			.65	.75	.60	.07	0		0	
27		0			.60	.75	.60	.06	0		0	
28		0			.65	.80	.56	.06	0		0	
29		0			------	.75	.56	.05	0		0	
30		0			------	.65	.56	.04	0		0	
31		------			------	.60	------	.04	------		0	------
TOTAL	0	.01	0	0	18.44	34.08	18.65	5.27	.26	0	16.59	0
MEAN	0	.0003	0	0	.66	1.10	.62	.17	.009	0	.54	0
MAX	0	.01	0	0	3.9	3.3	1.0	.48	.04	0	8.8	0
MIN	0	0	0	0	0	.44	.48	.04	0	0	0	0
AC-FT	0	.02	0	0	37	68	37	10	.5	0	33	0

CAL YR 1972 TOTAL 3.82 MEAN .010 MAX .06 MIN 0 AC-FT 7
WTR YR 1973 TOTAL 93.30 MEAN .26 MAX 8.8 MIN 0 AC-FT 185

PEAK DISCHARGE (BASE, 20 CFS).--Aug. 2 (1800) 244 cfs (3.73 ft); Aug. 16 (1600) 154 cfs (3.43 ft).

10259300 WHITEWATER RIVER AT INDIO, CALIF.

LOCATION.--Lat 33°44'06", long 116°14'39", in NW¼NE¼SW¼ sec.15, T.5 S., R.7 E., Riverside County, at center bridge pier on Interstate Highway 10, 2 miles northwest of Indio.

DRAINAGE AREA.--1,073 sq mi.

PERIOD OF RECORD.--March 1966 to current year.

GAGE.--Water-stage recorder and crest-stage gage. Altitude of gage is 5 ft (from topographic map).

AVERAGE DISCHARGE.--7 years, 3.31 cfs (2,400 acre-ft per year).

EXTREMES.--Current year: No flow during year.
Period of record: Maximum discharge, 11,400 cfs Jan. 25, 1969 (gage height, 14.41 ft), from rating curve extended above 1,300 cfs on basis of slope-area measurement at gage height 15.3 ft; no flow all or most of each year.
Flood of Mar. 2 or 3, 1938, 29,000 cfs, result of slope-area measurement at site 4.5 miles upstream.
Flood of Nov. 22, 1965, reached a stage of 15.3 ft, from floodmarks (discharge, 14,100 cfs, on basis of slope-area measurement of peak flow).

REMARKS.--No flow since May 11, 1972. No regulation above station. Water diverted from tributary streams for municipal supply in vicinity of Palm Springs. At times water is released to river at Coachella Canal crossing, 0.8 mile upstream. Figures for the calendar year 1972 are as follows: Maximum daily discharge, 7.1 cfs; minimum, zero; mean, 0.04 cfs; runoff, 29 acre-ft.

REVISIONS (WATER YEARS).--WRD Calif. 1972: 1971.

10259540 WHITEWATER RIVER NEAR MECCA, CALIF.

LOCATION.--Lat 33°31'29", long 116°04'36", in NW¼NW¼NW¼ sec.32, T.7 S., R.9 E., Riverside County, on left bank 1.6 miles upstream from mouth, and 3.3 miles south of Mecca.

DRAINAGE AREA.--1,494 sq mi.

PERIOD OF RECORD.--October 1960 to current year.

GAGE.--Water-stage recorder. Datum of gage is 221.00 ft below mean sea level (levels by Coachella County Water District). Oct. 1, 1960, to Mar. 22, 1967, at site 1.3 miles downstream and Mar. 23, 1967, to July 22, 1970, at site 0.7 mile downstream at different datums.

EXTREMES.--Period of record: Maximum daily discharge, 2,500 cfs (estimated) Jan. 25, 1969; minimum daily, 37 cfs Nov. 25-29, 1960.

REMARKS.--Records good. Most of the flow represents seepage and return flow from irrigated areas.

COOPERATION.--Fifty-two discharge measurements furnished by Coachella Valley County Water District.

DISCHARGE, IN CUBIC FEET PER SECOND, WATER YEAR OCTOBER 1972 TO SEPTEMBER 1973

DAY	OCT	NOV	DEC	JAN	FEB	MAR	APR	MAY	JUN	JUL	AUG	SEP
1	122	100	121	122	122	126	149	154	157	133	135	151
2	124	99	115	124	129	126	141	164	162	130	137	153
3	118	98	112	132	122	127	140	169	149	122	137	151
4	112	97	116	132	121	130	138	164	148	122	138	148
5	118	96	112	126	120	127	137	157	127	123	140	146
6	116	95	114	126	122	124	140	153	137	123	140	146
7	118	114	121	124	126	127	138	146	138	124	137	145
8	118	116	124	122	129	133	137	148	138	125	149	143
9	120	118	137	124	132	143	141	151	141	125	151	143
10	121	121	135	116	132	140	143	156	138	127	153	142
11	122	118	129	118	143	145	140	154	135	129	157	98
12	126	105	132	122	141	137	140	157	140	131	161	101
13	129	105	115	116	126	140	143	153	149	134	167	120
14	118	112	115	116	121	137	149	145	151	137	169	130
15	115	111	120	118	124	130	151	149	148	133	170	137
16	109	116	115	118	120	141	140	148	141	143	165	135
17	122	121	115	122	124	153	138	159	141	137	164	137
18	137	99	115	118	121	151	138	165	138	149	162	137
19	156	102	118	124	121	149	137	167	143	140	161	137
20	154	102	120	118	124	138	137	164	143	127	165	137
21	153	101	120	122	130	129	143	164	140	133	145	153
22	153	106	122	121	137	126	138	164	139	129	133	161
23	151	109	115	116	137	132	135	151	138	130	143	154
24	151	106	108	116	138	135	137	140	137	132	154	140
25	137	105	98	118	132	135	140	130	136	132	149	159
26	120	106	105	118	132	137	151	133	133	133	143	148
27	112	109	109	116	133	141	156	141	130	133	140	137
28	108	115	115	118	129	148	165	140	130	135	149	146
29	106	116	105	121	------	145	151	159	132	135	153	145
30	104	121	111	124	------	153	151	159	133	137	161	141
31	102	------	120	121	------	153	------	156	------	133	154	------
TOTAL	3,872	3,239	3,629	3,749	3,588	4,258	4,284	4,760	4,212	4,076	4,682	4,221
MEAN	125	108	117	121	128	137	143	154	140	131	151	141
MAX	156	121	137	132	143	153	165	169	162	149	170	161
MIN	102	95	98	116	120	124	135	130	127	122	133	98
AC-FT	7,680	6,420	7,200	7,440	7,120	8,450	8,500	9,440	8,350	8,080	9,290	8,370

CAL YR 1972 TOTAL 45,866 MEAN 125 MAX 156 MIN 94 AC-FT 90,980
WTR YR 1973 TOTAL 48,570 MEAN 133 MAX 170 MIN 95 AC-FT 96,340

10259600 COTTONWOOD WASH NEAR COTTONWOOD SPRING, CALIF.

LOCATION.--Lat 33°44'40", long 115°49'35", in SW¼NW¼SE¼ sec.10, T.5 S., R.11 E., Riverside County, on right bank on Cottonwood Spring Road, 1 mile northwest of Cottonwood Spring.

DRAINAGE AREA.--0.71 sq mi.

PERIOD OF RECORD.--October 1959 to September 1973 (discontinued).

GAGE.--Water-stage recorder with rain-gage attachment, crest-stage gage, and corrugated-pipe culvert control. Altitude of gage is 3,100 ft (from topographic map).

AVERAGE DISCHARGE.--14 years, 0.0006 cfs (0.4 acre-ft per year).

EXTREMES.--Current year: No flow during year.
Period of record: Maximum discharge, 34 cfs Oct. 3, 1966 (gage height, 3.77 ft, from crest-stage gage), on basis of culvert computation of maximum flow; no flow for all or most of each year.

REMARKS.--No flow since Aug. 28, 1971. No regulation or diversion above station. Monthly precipitation, in inches, is as follows: October, 0.6; November, 0.9; December, 0.1; February, 0.9; March, 1.4; the water year, 3.9.

10259920 WASTEWAY NO. 1 NEAR MECCA, CALIF.

LOCATION.--Lat 33°31'40", long 115°58'23", in NW¼SW¼SW¼ sec.29, T.7 S., R.10 E., Riverside County, on right bank of channel, 1,000 ft upstream from mouth, 2,250 ft downstream from State Highway 111, and 6.6 miles southeast of Mecca.

PERIOD OF RECORD.--February 1966 to current year.

GAGE.--Water-stage recorder. Altitude of gage is 220 ft below mean sea level (from topographic map).

EXTREMES.--Period of record: Maximum daily discharge, 348 cfs Mar. 7, 1971; minimum daily, 2.0 cfs Dec. 26, 27, 1969, Mar. 8, 1970.

REMARKS.--Records poor. Discharge represents seepage and return flows from irrigated areas. At times water is wasted from Coachella Canal.

DISCHARGE, IN CUBIC FEET PER SECOND, WATER YEAR OCTOBER 1972 TO SEPTEMBER 1973

DAY	OCT	NOV	DEC	JAN	FEB	MAR	APR	MAY	JUN	JUL	AUG	SEP
1	4.4	3.5	3.8	3.8	4.8	4.4	5.2	4.8	4.8	4.8	4.8	5.2
2	4.4	3.5	4.1	4.1	4.8	4.4	5.2	4.8	4.8	40	4.8	5.2
3	4.4	3.2	4.8	4.4	4.8	4.4	5.2	4.8	127	4.8	4.8	98
4	4.4	3.2	4.8	4.8	4.8	4.8	5.2	4.8	63	4.8	5.2	58
5	4.4	3.2	4.8	5.5	4.8	4.8	5.5	4.8	34	4.8	108	5.2
6	4.4	3.2	5.2	5.9	5.2	5.2	5.5	4.8	41	4.8	63	5.2
7	4.4	3.2	5.2	6.3	5.2	5.2	5.5	5.2	4.8	4.8	5.2	5.2
8	4.4	3.2	5.9	6.3	5.2	5.5	5.5	5.2	4.8	5.9	5.2	5.2
9	4.1	3.2	5.9	60	5.2	5.5	5.5	5.9	5.2	5.5	5.2	5.2
10	3.8	3.8	6.7	144	5.2	5.5	5.5	5.9	5.2	4.8	5.2	5.2
11	4.1	4.8	6.7	4.1	5.5	5.5	5.9	5.9	5.5	4.8	5.2	5.5
12	4.1	14	7.2	3.8	5.5	5.5	5.9	5.9	5.5	4.8	5.2	5.5
13	4.1	109	7.2	3.8	5.5	89	5.9	5.9	5.5	4.8	5.2	6.3
14	4.1	92	7.2	3.8	5.5	188	5.5	5.9	5.2	4.8	5.2	6.3
15	4.1	4.0	218	3.8	5.2	183	5.5	5.9	5.2	4.8	5.2	5.9
16	4.1	3.2	254	3.8	5.2	13	5.5	5.9	5.2	4.8	5.2	5.9
17	4.1	3.0	25	3.8	5.2	4.1	5.5	5.9	197	4.8	5.2	5.5
18	4.1	3.0	3.8	3.8	4.8	4.1	5.5	5.9	151	5.2	5.2	5.5
19	4.1	3.0	3.5	3.8	4.8	4.4	4.8	5.5	55	5.2	5.2	5.2
20	4.1	3.0	3.5	3.8	4.4	4.4	4.8	5.2	5.2	5.5	5.5	5.2
21	34	3.0	3.5	3.8	4.4	4.4	4.8	5.2	5.2	4.8	5.5	5.2
22	61	3.0	3.5	3.8	4.4	4.4	64	4.8	5.2	4.8	5.5	5.2
23	94	45	3.5	4.1	4.4	4.4	135	4.8	5.2	4.8	5.5	57
24	3.2	49	3.8	4.8	4.4	4.4	4.8	4.8	5.2	4.8	5.5	71
25	31	3.2	3.8	5.2	4.4	4.8	4.8	4.8	5.2	4.8	5.5	78
26	3.2	75	3.8	5.2	4.4	4.8	4.8	4.8	4.8	4.8	5.5	120
27	3.2	6.1	3.8	5.2	4.4	4.8	4.8	4.8	4.8	4.8	5.5	9.6
28	3.2	3.2	3.8	4.8	4.4	4.8	5.2	4.8	4.8	4.8	5.5	5.2
29	3.2	3.5	3.8	4.8	------	4.8	5.2	4.8	4.8	101	5.2	5.2
30	3.5	3.5	3.8	4.8	------	5.2	5.2	4.8	4.8	32	5.2	8.4
31	3.5	------	3.8	4.8	------	5.2	------	4.8	------	30	5.2	------
TOTAL	327.1	466.7	628.2	334.7	136.8	602.7	347.2	162.1	784.9	335.9	323.3	619.2
MEAN	10.6	15.6	20.3	10.8	4.89	19.4	11.6	5.23	26.2	10.8	10.4	20.6
MAX	94	109	254	144	5.5	188	135	5.9	197	101	108	120
MIN	3.2	3.0	3.5	3.8	4.4	4.1	4.8	4.8	4.8	4.8	4.8	5.2
AC-FT	649	926	1,250	664	271	1,200	689	322	1,560	666	641	1,230

CAL YR 1972 TOTAL 4,480.5 MEAN 12.2 MAX 254 MIN 3.0 AC-FT 8,890
WTR YR 1973 TOTAL 5,068.8 MEAN 13.9 MAX 254 MIN 3.0 AC-FT 10,050

10260500 DEEP CREEK NEAR HESPERIA, CALIF.

LOCATION.--Lat 34°20'28", long 117°13'39", in NW¼NE¼SE¼ sec.18, T.3 N., R.3 W., San Bernardino County, on right bank 0.5 mile upstream from confluence with West Fork Mojave River, and 7 miles southeast of Hesperia.

DRAINAGE AREA.--136 sq mi.

PERIOD OF RECORD.--October 1904 to September 1922, October 1929 to current year. Monthly discharge only prior to January 1930, published in WSP 1314.

GAGE.--Water-stage recorder. Broad-crested weir since December 1938. Altitude of gage is 3,050 ft (from topographic map). See WSP 1314 for history of change prior to Dec. 10, 1938.

AVERAGE DISCHARGE.--62 years, 67.8 cfs (49,120 acre-ft per year).

EXTREMES.--Current year: Maximum discharge, 6,810 cfs Feb. 11 (gage height, 6.57 ft); minimum daily, 1.7 cfs Sept. 21, 22.
Period of record: Maximum discharge, 46,600 cfs Mar. 2, 1938, based on slope-area measurement of maximum flow; no flow July 17, 18, 1961.

REMARKS.--Records fair. Slight regulation by Lake Arrowhead (capacity, 48,000 acre-ft), used principally for recreation.

DISCHARGE, IN CUBIC FEET PER SECOND, WATER YEAR OCTOBER 1972 TO SEPTEMBER 1973

DAY	OCT	NOV	DEC	JAN	FEB	MAR	APR	MAY	JUN	JUL	AUG	SEP
1	1.8	3.9	7.6	13	19	261	122	131	27	6.2	3.3	2.1
2	1.9	3.9	7.4	13	18	167	105	120	27	5.8	3.6	2.0
3	1.9	4.1	7.2	15	20	129	102	131	24	5.5	3.8	2.1
4	1.9	4.1	18	17	50	124	117	136	22	5.2	3.4	2.0
5	1.9	3.9	82	13	42	99	110	140	22	5.1	2.9	2.0
6	2.0	3.9	29	13	281	121	137	110	21	4.8	2.7	2.0
7	2.0	4.2	21	12	188	249	185	109	20	4.6	2.5	2.1
8	2.0	4.3	19	13	91	187	208	115	18	4.5	2.4	2.0
9	2.1	4.7	15	13	64	151	199	124	16	4.5	2.6	1.9
10	2.2	4.6	11	18	55	133	185	124	15	4.4	2.0	1.9
11	2.3	5.4	7.4	15	2,180	188	230	124	15	4.0	2.0	1.9
12	2.5	8.3	6.9	14	441	177	261	106	14	4.1	2.0	1.9
13	2.6	7.0	8.3	15	228	162	304	95	14	3.8	2.1	1.9
14	2.7	7.2	7.4	15	145	137	277	88	14	3.5	2.1	1.9
15	2.7	14	6.9	15	115	118	206	88	16	3.6	2.1	1.9
16	2.7	16	8.3	16	93	118	195	78	16	3.5	2.2	1.8
17	3.2	45	10	141	83	127	247	70	15	3.5	2.5	1.8
18	3.4	19	13	57	78	124	263	62	14	3.4	2.4	1.8
19	4.2	13	13	82	78	125	228	65	12	3.5	2.1	2.0
20	5.7	11	16	42	77	157	200	58	12	3.6	2.2	1.8
21	4.7	8.9	23	33	73	143	161	53	11	3.5	2.6	1.7
22	4.3	8.2	24	28	67	135	163	49	9.3	3.5	2.3	1.7
23	4.1	7.9	22	22	67	122	175	44	9.1	3.3	2.4	1.8
24	3.7	7.5	19	20	70	145	205	42	8.2	3.3	2.2	1.9
25	3.6	7.4	17	22	75	156	224	39	7.7	3.3	2.1	2.1
26	3.5	7.2	14	23	81	158	239	37	7.7	3.2	2.1	2.1
27	3.8	7.2	13	18	91	129	237	34	6.9	3.2	2.1	2.1
28	4.1	7.7	14	19	439	125	222	32	6.7	3.2	2.2	2.0
29	4.2	7.9	13	20	------	108	201	29	6.6	3.1	2.3	1.9
30	4.2	7.7	9.3	21	------	100	175	28	6.2	3.1	2.3	1.9
31	3.8	------	12	21	------	107	------	27	------	3.2	2.2	------
TOTAL	95.7	265.1	494.7	799	5,309	4,482	5,883	2,491	433.4	123.0	75.7	58.0
MEAN	3.09	8.84	16.0	25.8	190	145	196	80.4	14.4	3.97	2.44	1.93
MAX	5.7	45	82	141	2,180	261	304	140	27	6.2	3.8	2.1
MIN	1.8	3.9	6.9	12	18	99	102	27	6.2	3.1	2.0	1.7
AC-FT	190	526	981	1,580	10,530	8,890	11,670	4,940	860	244	150	115

CAL YR 1972 TOTAL 3,553.62 MEAN 9.71 MAX 82 MIN .84 AC-FT 7,050
WTR YR 1973 TOTAL 20,509.60 MEAN 56.2 MAX 2,180 MIN 1.7 AC-FT 40,680

PEAK DISCHARGE (BASE, 400 CFS)

DATE	TIME	G.H.	DISCHARGE	DATE	TIME	G.H.	DISCHARGE
2-6	1730	3.21	700	2-28	0730	3.19	699
2-11	0630	6.57	6,810				

10261100 MOJAVE RIVER BELOW FORKS RESERVOIR, NEAR HESPERIA, CALIF.

LOCATION.--Lat 34°20'38", long 117°14'15", in SW¼NE¼SW¼ sec.18, T.3 N., R.3 W., San Bernardino County, on left bank of reservoir outlet channel, 6.5 miles southeast of Hesperia.

DRAINAGE AREA.--211 sq mi.

PERIOD OF RECORD.--October 1971 to current year.

GAGE.--Water-stage recorder. Altitude of gage is 3,000 ft (from topographic map).

EXTREMES.--Current year: Maximum discharge, 7,300 cfs Feb. 11, on basis of computation of flow through dam; maximum gage height, 3.97 ft Nov. 15; minimum daily discharge, 1.8 cfs Sept. 7, 18.
Period of record: Maximum discharge, 7,300 cfs Feb. 11, on basis of computation of flow through dam; maximum gage height, 4.50 ft Dec. 23, 1971; minimum daily discharge, 0.69 cfs Aug. 6-27, 1972.

REMARKS.--Records fair except those above 600 cfs, which are poor. Flow partially regulated by Lake Arrowhead (capacity, 48,000 acre-ft) used principally for recreation, Silverwood Lake (capacity, 78,000 acre-ft) used for the storage and distribution of imported water and recreation, and Mojave Forks Reservoir (capacity, 79,800 acre-ft) used for flood control with ungated opening, capacity, 23,500 cfs. Silverwood Reservoir releases all natural inflow to the west fork of the Mojave River as soon as possible after a storm. Sewage effluent from Lake Arrowhead area is released above gage at times.

DISCHARGE, IN CUBIC FEET PER SECOND, WATER YEAR OCTOBER 1972 TO SEPTEMBER 1973

DAY	OCT	NOV	DEC	JAN	FEB	MAR	APR	MAY	JUN	JUL	AUG	SEP
1	2.1	6.0	9.0	14	39	409	208	90	29	5.5	2.3	2.3
2	1.9	6.0	11	13	35	320	182	138	27	5.2	2.3	2.2
3	2.3	6.0	13	14	40	230	176	179	26	5.0	2.3	2.2
4	2.5	6.0	21	17	85	170	193	196	24	4.7	2.3	2.2
5	2.5	6.3	94	14	84	130	176	193	23	4.5	2.2	2.1
6	2.7	6.0	35	11	354	181	204	144	21	4.3	2.2	2.1
7	2.1	5.4	26	12	276	486	248	144	20	4.1	2.2	1.8
8	2.3	5.1	22	12	304	469	248	172	19	3.9	2.2	2.4
9	2.9	6.0	19	15	111	494	228	186	18	3.7	2.3	3.0
10	3.4	7.0	15	20	114	355	172	176	17	3.5	2.3	2.9
11	3.4	7.8	14	19	3,500	546	228	150	16	3.3	2.9	3.0
12	3.4	13	16	18	780	275	260	138	15	3.2	3.9	2.9
13	3.4	12	16	18	532	345	300	125	14	3.1	3.7	3.0
14	3.4	493	17	19	452	310	268	112	13	3.0	3.2	3.2
15	3.2	947	17	19	208	244	186	102	15	2.9	3.4	3.2
16	3.4	35	17	20	160	200	179	94	14	2.9	3.2	3.0
17	3.4	56	18	142	137	168	285	86	13	2.8	3.5	2.2
18	3.7	31	21	62	121	176	290	79	12	2.8	2.8	1.8
19	4.8	16	22	129	112	176	248	73	11	2.8	2.3	2.0
20	6.0	13	25	100	108	408	212	67	10	2.7	2.9	2.2
21	6.3	12	33	79	100	478	124	62	9.2	2.7	3.5	2.0
22	6.3	11	37	47	95	442	119	58	8.7	2.7	2.9	2.2
23	6.3	10	32	41	93	305	150	53	8.3	2.6	2.9	3.0
24	5.7	9.4	28	40	105	320	200	50	7.9	2.6	2.9	2.6
25	5.1	9.0	25	43	117	320	232	47	7.5	2.6	2.8	2.3
26	5.4	8.6	23	45	132	305	276	44	7.1	2.5	3.5	2.4
27	5.7	8.2	20	42	160	272	248	40	6.8	2.5	2.9	2.4
28	5.7	8.6	20	51	585	268	204	37	6.4	2.5	2.4	2.4
29	5.4	9.0	19	53	------	244	179	35	6.1	2.4	2.4	3.0
30	6.0	9.0	15	48	------	240	147	33	5.8	2.4	2.4	3.0
31	5.7	------	14	45	------	190	------	31	------	2.4	2.3	------
TOTAL	126.4	1,778.4	714.0	1,222	8,939	9,476	6,370	3,134	430.8	101.8	85.3	75.0
MEAN	4.08	59.3	23.0	39.4	319	306	212	101	14.4	3.28	2.75	2.50
MAX	6.3	947	94	142	3,500	546	300	196	29	5.5	3.9	3.2
MIN	1.9	5.1	9.0	11	35	130	119	31	5.8	2.4	2.2	1.8
AC-FT	251	3,530	1,420	2,420	17,730	18,800	12,630	6,220	854	202	169	149

CAL YR 1972 TOTAL 5,884.01 MEAN 16.1 MAX 947 MIN .69 AC-FT 11,670
WTR YR 1973 TOTAL 32,452.70 MEAN 88.9 MAX 3,500 MIN 1.8 AC-FT 64,370

10261500 MOJAVE RIVER AT LOWER NARROWS, NEAR VICTORVILLE, CALIF.

LOCATION.--Lat 34°34'23", long 117°19'11", in SW¼SW¼SE¼ sec.29, T.6 N., R.4 W., San Bernardino County, on left bank 650 ft upstream from bridge on county road, formerly U.S. Highway 66, 0.6 mile downstream from Atchison, Topeka, and Santa Fe Railway bridge, and 3 miles northwest of Victorville.

DRAINAGE AREA.--514 sq mi.

PERIOD OF RECORD.--February 1899 to September 1906, October 1930 to current year. Monthly discharge only for January to September 1906, October, November 1930, published in WSP 1314. Prior to October 1936, published as "at Victorville" and as "near Victorville" in 1937.

GAGE.--Water-stage recorder. Datum of gage is 2,642.97 ft above mean sea level. See WSP 1314 for history of gage changes prior to Mar. 28, 1938. Mar. 28, 1938, to Apr. 14, 1966, at site 350 ft upstream at datum 5.00 ft higher; Apr. 14, 1966, to July 17, 1969, at site 350 ft upstream at datum 3.00 ft higher.

AVERAGE DISCHARGE.--50 years, 74.4 cfs (53,900 acre-ft per year).

EXTREMES.--Current year: Maximum discharge, 2,400 cfs Feb. 11 (gage height, 5.20 ft, from floodmarks); minimum daily, 7.9 cfs Aug. 9-12.
Period of record: Maximum discharge, 70,600 cfs Mar. 2, 1938 (gage height, 23.7 ft, present datum), from rating curve extended above 10,000 cfs on basis of slope-area measurement of maximum flow; minimum daily, 6 cfs Aug. 19, 21, 26, 1951.

REMARKS.--Records poor. Slight regulation by Lake Arrowhead (capacity, 48,000 acre-ft) used principally for recreation, Silverwood Lake (capacity, 78,000 acre-ft) used for the storage and distribution of imported water and recreation, and by Mojave Forks Reservoir since June 1970 (capacity, 89,700 acre-ft) with ungated opening, capacity, 23,500 cfs. Since 1970 effluent from Mojave State Fish Hatchery diverted to Spring Valley Lake. Diversions and pumping for irrigation of about 5,000 acres above station.

DISCHARGE, IN CUBIC FEET PER SECOND, WATER YEAR OCTOBER 1972 TO SEPTEMBER 1973

DAY	OCT	NOV	DEC	JAN	FEB	MAR	APR	MAY	JUN	JUL	AUG	SEP
1	16	28	31	28	36	77	55	53	19	13	9.5	16
2	18	28	31	28	36	47	61	34	19	13	9.5	13
3	18	28	31	31	36	49	63	51	19	12	9.5	16
4	18	28	31	32	37	45	59	57	19	12	9.5	16
5	18	28	32	32	39	39	65	57	19	12	9.5	18
6	18	28	32	32	39	39	59	57	19	11	9.5	15
7	19	28	32	32	39	41	84	45	19	11	9.5	15
8	19	28	32	32	39	70	116	45	19	11	9.5	15
9	19	28	32	34	39	156	134	45	19	10	7.9	15
10	20	30	34	34	37	122	98	39	19	10	7.9	16
11	20	31	34	34	1,420	126	92	30	18	9.0	7.9	18
12	21	32	34	34	1,190	107	130	20	18	9.0	7.9	18
13	22	32	32	34	355	107	176	20	18	9.0	9.5	18
14	24	32	32	32	679	104	183	16	18	9.0	13	18
15	24	34	34	34	200	98	145	20	17	9.0	14	18
16	24	34	36	34	54	72	110	20	17	9.0	13	18
17	24	36	37	36	50	60	130	22	17	9.0	12	20
18	24	36	36	39	48	50	179	19	17	9.0	12	21
19	55	36	36	43	47	45	179	20	16	9.0	8.7	22
20	49	36	36	36	46	165	142	15	16	9.0	11	22
21	39	34	36	34	46	250	92	18	16	9.0	13	24
22	36	32	37	34	45	150	65	18	16	9.0	12	25
23	32	32	37	34	45	122	65	16	15	9.0	11	26
24	31	31	36	34	45	119	77	19	15	9.0	11	25
25	30	32	34	34	44	138	98	20	15	9.0	11	24
26	30	32	32	34	44	134	119	19	15	9.0	12	24
27	28	32	31	34	44	138	142	16	14	9.5	12	24
28	28	32	32	34	49	110	116	19	14	9.5	15	22
29	28	31	30	34	------	98	90	19	14	9.5	16	24
30	28	31	26	34	------	84	67	19	13	9.5	13	25
31	28	------	26	34	------	74	------	19	------	9.5	14	------
TOTAL	808	940	1,022	1,045	4,828	3,036	3,191	887	509	306.5	340.8	591
MEAN	26.1	31.3	33.0	33.7	172	97.9	106	28.6	17.0	9.89	11.0	19.7
MAX	55	36	37	43	1,420	250	183	57	19	13	16	26
MIN	16	28	26	28	36	39	55	15	13	9.0	7.9	13
AC-FT	1,600	1,860	2,030	2,070	9,580	6,020	6,330	1,760	1,010	608	676	1,170

CAL YR 1972 TOTAL 7,831.0 MEAN 21.4 MAX 55 MIN 10 AC-FT 15,530
WTR YR 1973 TOTAL 17,504.3 MEAN 48.0 MAX 1,420 MIN 7.9 AC-FT 34,720

NOTE.--No gage-height record Feb. 11, 12, 15-27, May 29 to Aug. 7.

10262000 MOJAVE RIVER NEAR HODGE, CALIF.

LOCATION.--Lat 34°50'09", long 117°11'27", in SW¼SE¼SE¼ sec.28, T.9 N., R.3 W., San Bernardino County, at county bridge 1.5 miles north of Hodge, and 10.9 miles southwest of Barstow.

DRAINAGE AREA.--1,090 sq mi.

PERIOD OF RECORD.--October 1930 to September 1932, October 1970 to current year.

GAGE.--Water-stage recorder and crest-stage gage. Altitude of gage is 2,260 ft (from topographic map). Prior to Oct. 1, 1970, at different datum.

AVERAGE DISCHARGE.--5 years (1930-32, 1970-73), 18.4 cfs (13,330 acre-ft per year).

EXTREMES.--Current year: Maximum discharge, 813 cfs Feb. 12 (gage height, 7.42 ft), on basis of slope-conveyance computation of maximum flow; no flow most of year.
Period of record: Maximum discharge, 8,900 cfs Feb. 9, 1932 (gage height, 5.20 ft, datum then in use); no flow most of each year.

REMARKS.--Records poor. Slight regulation by Lake Arrowhead (capacity, 48,000 acre-ft) used principally for recreation, Silverwood Lake (capacity, 78,000 acre-ft) used for water distribution and recreation, and Mojave Forks Reservoir (capacity, 89,700 acre-ft) with ungated opening, capacity, 23,500 cfs. Diversion and pumping for irrigation of about 12,000 acres above station.

DISCHARGE, IN CUBIC FEET PER SECOND, WATER YEAR OCTOBER 1972 TO SEPTEMBER 1973

DAY	OCT	NOV	DEC	JAN	FEB	MAR	APR	MAY	JUN	JUL	AUG	SEP
1					0	0	5.0	18				
2					0	0	0	0				
3					0	0	0	0				
4					0	0	0	0				
5					0	0	0	0				
6					0	0	0	0				
7					0	0	0	0				
8					0	0	0	0				
9					0	0	0	0				
10					0	0	0	0				
11					100	0	0	0				
12					430	0	0	0				
13					20	0	88	0				
14					10	0	100	0				
15					35	0	70	0				
16					9.0	0	58	0				
17					0	0	50	0				
18					0	0	50	0				
19					0	0	60	0				
20					0	0	70	0				
21					0	64	50	0				
22					0	138	30	0				
23					0	118	0	0				
24					0	62	0	0				
25					0	66	0	0				
26					0	72	0	0				
27					0	63	50	0				
28					0	58	84	0				
29					------	52	50	0				
30					------	27	28	0				
31		------			------	28	------	0	------			------
TOTAL	0	0	0	0	604.0	748	843.0	18	0	0	0	0
MEAN	0	0	0	0	21.6	24.1	28.1	.58	0	0	0	0
MAX	0	0	0	0	430	138	100	18	0	0	0	0
MIN	0	0	0	0	0	0	0	0	0	0	0	0
AC-FT	0	0	0	0	1,200	1,480	1,670	36	0	0	0	0

CAL YR 1972 TOTAL 0.00 MEAN .00 MAX .0 MIN 0 AC-FT 0
WTR YR 1973 TOTAL 2,213.00 MEAN 6.06 MAX 430 MIN 0 AC-FT 4,390

PEAK DISCHARGE (BASE, 100 CFS).--Feb. 12, 813 cfs (7.42 ft); Mar. 21, 155 cfs (estimated).

NOTE.--No gage-height record Oct. 1 to Sept. 6.

10262500 MOJAVE RIVER AT BARSTOW, CALIF.

LOCATION.--Lat 34°54'25", long 117°01'19", in SE¼SW¼SW¼ sec.31, T.10 N., R.1 W., San Bernardino County, on left bank 75 ft upstream from bridge on U.S. Highway 91 at Barstow.

DRAINAGE AREA.--1,290 sq mi.

PERIOD OF RECORD.--October 1930 to current year.

GAGE.--Water-stage recorder. Datum of gage is 2,089.80 ft above mean sea level.

AVERAGE DISCHARGE.--43 years, 23.6 cfs (17,100 acre-ft per year).

EXTREMES.--Current year: Maximum discharge, 670 cfs Feb. 12 (gage height, 3.20 ft), on basis of slope-conveyance computation of maximum flow; no flow most of year.
Period of record: Maximum discharge, 64,300 cfs Mar. 3, 1938 (gage height, 8.60 ft), on basis of slope-area measurement of maximum flow; no flow for several months in each year.

REMARKS.--Records poor. Slight regulation by Lake Arrowhead (capacity, 48,000 acre-ft) used principally for recreation, Silverwood Lake (capacity, 78,000 acre-ft) used for water distribution and recreation, and Mojave Forks Reservoir (capacity, 89,700 acre-ft), with ungated opening, capacity, 23,500 cfs. Diversions and pumping for irrigation of about 15,000 acres above station.

DISCHARGE, IN CUBIC FEET PER SECOND, WATER YEAR OCTOBER 1972 TO SEPTEMBER 1973

DAY	OCT	NOV	DEC	JAN	FEB	MAR	APR	MAY	JUN	JUL	AUG	SEP
1					0	0						
2					0	0						
3					0	0						
4					0	0						
5					0	0						
6					0	0						
7					0	0						
8					0	0						
9					0	0						
10					0	0						
11					0	0						
12					56	0						
13					.50	0						
14					.20	0						
15					6.8	0						
16					.40	0						
17					.30	0						
18					.20	0						
19					.10	0						
20					0	0						
21					0	0						
22					0	3.0						
23					0	5.0						
24					0	2.0						
25					0	1.0						
26					0	.50						
27					0	0						
28					0	0						
29					------	0						
30					------	0						
31		------			------	0	------		------			------
TOTAL	0	0	0	0	64.50	11.50	0	0	0	0	0	0
MEAN	0	0	0	0	2.30	.37	0	0	0	0	0	0
MAX	0	0	0	0	56	5.0	0	0	0	0	0	0
MIN	0	0	0	0	0	0	0	0	0	0	0	0
AC-FT	0	0	0	0	128	23	0	0	0	0	0	0

CAL YR 1972 TOTAL 2.40 MEAN .007 MAX 2.4 MIN 0 AC-FT 4
WTR YR 1973 TOTAL 76.00 MEAN .21 MAX 56 MIN 0 AC-FT 151

PEAK DISCHARGE (BASE, 100 CFS).--Feb. 12 (1100) 670 cfs (3.20 ft).

NOTE.--No gage-height record Jan. 12 to Mar. 27.

10262600 BOOM CREEK NEAR BARSTOW, CALIF.

LOCATION.--Lat 34°54'20", long 116°56'57", in NE¼NW¼NE¼ sec.2, T.9 N., R.1 W., San Bernardino County, at culvert on U.S. Highways 91 and 466, 4.3 miles east of Barstow.

DRAINAGE AREA.--0.24 sq mi.

PERIOD OF RECORD.--Water years 1959-66 (annual maximum), October 1966 to September 1973 (discontinued).

GAGE.--Water-stage recorder and crest-stage gage with rain-gage attachment and culvert control. Altitude of gage is 2,280 ft (from topographic map). Jan. 13, 1959, to Feb. 8, 1967, crest-stage gage only at same site and datum.

AVERAGE DISCHARGE.--7 years, 0.002 cfs (1.4 acre-ft per year).

EXTREMES.--Current year: Maximum discharge, 2.7 cfs Feb. 14 (gage height, 8.30 ft); no flow except Oct. 19, 20, Feb. 11, 14.
Period of record: Maximum discharge, 125 cfs Sept. 1, 1960 (gage height,14.23 ft), on basis of computation of maximum flow through culvert; no flow most of each year.

REMARKS.--Records poor. No regulation or diversion above station.

DISCHARGE, IN CUBIC FEET PER SECOND, WATER YEAR OCTOBER 1972 TO SEPTEMBER 1973

DAY	OCT	NOV	DEC	JAN	FEB	MAR	APR	MAY	JUN	JUL	AUG	SEP
1	0				0							
2	0				0							
3	0				0							
4	0				0							
5	0				0							
6	0				0							
7	0				0							
8	0				0							
9	0				0							
10	0				0							
11	0				.05							
12	0				0							
13	0				0							
14	0				.06							
15	0				0							
16	0				0							
17	0				0							
18	0				0							
19	.02				0							
20	.03				0							
21	0				0							
22	0				0							
23	0				0							
24	0				0							
25	0				0							
26	0				0							
27	0				0							
28	0				0							
29	0				------							
30	0				------							
31	0	------			------		------		------			------
TOTAL	.05	0	0	0	.11	0	0	0	0	0	0	0
MEAN	.002	0	0	0	.004	0	0	0	0	0	0	0
MAX	.03	0	0	0	.06	0	0	0	0	0	0	0
MIN	0	0	0	0	0	0	0	0	0	0	0	0
AC-FT	.10	0	0	0	.2	0	0	0	0	0	0	0
(a)	.3	.5	.3	.1	.9	.8	.3	0	0	0	0	0

CAL YR 1972 TOTAL 1.91 MEAN .0050 MAX 1.4 MIN 0 AC-FT 3.8
WTR YR 1973 TOTAL 0.16 MEAN .0004 MAX .06 MIN 0 AC-FT .3

a Precipitation, in inches.
NOTE.--No gage-height record Dec. 19 to Feb. 14.

10263000 MOJAVE RIVER AT AFTON, CALIF.

LOCATION.--Lat 35°02'14", long 116°23'00", in SW¼NW¼SE¼ sec.18, T.11 N., R.6 E., San Bernardino County, on downstream end of right pier of Union Pacific Railroad bridge, 0.3 mile west of Afton.

DRAINAGE AREA.--2,120 sq mi.

PERIOD OF RECORD.--October 1929 to September 1932, October 1952 to current year. Records for the water year 1930 incomplete, yearly estimate published in WSP 1314.

GAGE.--Water-stage recorder. Datum of gage is 1,400.15 ft above mean sea level. Dec. 21, 1929, to Sept. 30, 1932, at site 1.7 miles downstream at different datum.

AVERAGE DISCHARGE.--24 years, 5.90 cfs (4,270 acre-ft per year).

EXTREMES.--Current year: Maximum discharge, 62 cfs Feb. 13 (gage height, unknown), on basis of slope-conveyance measurement of maximum flow; no flow June 9 to Sept. 30.
Period of record: Maximum discharge, 18,000 cfs Jan. 26, 1969 (gage height, 10.40 ft), from rating curve extended above 3,200 cfs on basis of slope-area measurement of maximum flow; no flow for some days in many years.

REMARKS.--Records fair. Natural flow affected by ground-water withdrawals, diversions, municipal use, and storage in two small reservoirs.

DISCHARGE, IN CUBIC FEET PER SECOND, WATER YEAR OCTOBER 1972 TO SEPTEMBER 1973

DAY	OCT	NOV	DEC	JAN	FEB	MAR	APR	MAY	JUN	JUL	AUG	SEP
1	.35	.54	.78	.72	.66	.72	.60	.66	.27			
2	.35	.54	.78	.72	.66	.72	.54	.60	.27			
3	.39	.54	.78	.72	.66	.72	.54	.60	.24			
4	.39	.54	.78	.72	.66	.72	.54	.54	.14			
5	.39	.54	.78	.72	.66	.72	.54	.49	.14			
6	.39	.54	.78	.78	.72	.78	.54	.49	.16			
7	.39	.54	.78	.72	.72	1.3	.54	.44	.12			
8	.39	.54	.85	.78	.60	.85	.54	.44	.01			
9	.39	.54	.85	.78	.60	.85	.54	.44	0			
10	.39	.60	.85	.78	.60	.78	.54	.39	0			
11	.39	.72	.85	.78	.72	.78	.54	.39	0			
12	.39	.60	.85	.78	.66	.78	.54	.39	0			
13	.44	.60	.85	.78	3.9	.85	.54	.39	0			
14	.49	.60	.85	.78	1.0	.85	.54	.39	0			
15	.49	.60	.85	.78	1.1	.72	.54	.44	0			
16	.49	.72	.85	.85	.78	.72	.54	.39	0			
17	.49	.72	.78	.92	.72	.72	.54	.39	0			
18	.49	.60	.78	.85	.72	.72	.49	.35	0			
19	.49	.60	.78	1.1	.72	.72	.49	.31	0			
20	.49	.60	.78	.85	.72	.72	.49	.24	0			
21	.49	.60	.78	.85	.72	.72	.49	.21	0			
22	.49	.60	.78	.78	.72	.72	.49	.24	0			
23	.49	.60	.78	.78	.72	.72	.49	.27	0			
24	.49	.60	.78	.78	.72	.72	.49	.24	0			
25	.49	.66	.78	.78	.72	.72	.54	.21	0			
26	.49	.72	.78	.72	.72	.72	.49	.14	0			
27	.54	.72	.72	.72	.72	.72	.49	.16	0			
28	.54	.72	.72	.66	.72	.72	.49	.21	0			
29	.54	.72	.72	.66	------	.66	.49	.27	0			
30	.54	.72	.72	.66	------	.66	.66	.24	0			
31	.54	------	.72	.66	------	.66	------	.21	------			------
TOTAL	14.11	18.48	24.51	23.96	23.34	23.48	15.83	11.17	1.35	0	0	0
MEAN	.46	.62	.79	.77	.83	.76	.53	.36	.045	0	0	0
MAX	.54	.72	.85	1.1	3.9	1.3	.66	.66	.27	0	0	0
MIN	.35	.54	.72	.66	.60	.66	.49	.14	0	0	0	0
AC-FT	28	37	49	48	46	47	31	22	2.7	0	0	0

CAL YR 1972 TOTAL 296.50 MEAN .81 MAX 139 MIN 0 AC-FT 588
WTR YR 1973 TOTAL 156.23 MEAN .43 MAX 3.9 MIN 0 AC-FT 310

PEAK DISCHARGE (BASE, 100 CFS).--No peak above base.

NOTE.--No gage-height record Feb. 13.

10263500 BIG ROCK CREEK NEAR VALYERMO, CALIF.

LOCATION.--Lat 34°25'15", long 117°50'19", in NW¼SE¼NE¼ sec.20, T.4 N., R.9 W., Los Angeles County, on left bank 0.1 mile upstream from Punchbowl Canyon, and 1.9 miles southeast of Valyermo.
DRAINAGE AREA.--22.9 sq mi.
PERIOD OF RECORD.--January 1923 to current year. Monthly discharge only for October 1937 to January 1939, published in WSP 1314. Prior to October 1954, published as Rock Creek near Valyermo.
GAGE.--Water-stage recorder. Altitude of gage is 4,050 ft (from topographic map). Prior to May 4, 1938, at same site at different datums. May 4, 1938, to Jan. 26, 1939, at site 0.2 mile downstream (below Punchbowl Canyon) at different datum.
AVERAGE DISCHARGE.--50 years, 16.0 cfs (11,590 acre-ft per year).
EXTREMES.--Current year: Maximum discharge, 161 cfs Feb. 11 (gage height, 4.39 ft); minimum daily, 2.7 cfs Oct. 1.
Period of record: Maximum discharge, 8,300 cfs Mar. 2, 1938, on basis of slope-area measurement of maximum flow; minimum daily, 0.70 cfs Nov. 5, 1951.
REMARKS.--Records fair. No regulation or diversion above station. Some infiltration into the streambed in the immediate vicinity of station. Records of water temperatures for the current year are published in Part 2 of this report.
COOPERATION.--Thirteen discharge measurements furnished by Los Angeles County Flood Control District.
REVISIONS (WATER YEARS).-Revised figures of discharge, in cubic feet per second, for the water year 1972, superseding those published in WRD Calif. 1972, are given herewith:

Date	Discharge	Date	Discharge	Date	Discharge
1972		1972-Con.		1972-Con.	
Sept. 12	2.9	Sept. 19	2.8	Sept. 25	2.7
13	2.9	20	2.8	26	2.7
14	2.9	21	2.7	27	2.7
15	2.9	22	2.7	28	2.7
16	2.8	23	2.7	29	2.7
17	2.8	24	2.7	30	2.7
18	2.8				

Month	Cfs-days	Max	Min	Mean	Ac-ft
Sept. 1972	87.9	3.4	2.7	2.93	174
WTR YR 1972	2,677.3	190	2.7	7.32	5,310

DISCHARGE, IN CUBIC FEET PER SECOND, WATER YEAR OCTOBER 1972 TO SEPTEMBER 1973

DAY	OCT	NOV	DEC	JAN	FEB	MAR	APR	MAY	JUN	JUL	AUG	SEP
1	2.7	2.9	4.1	4.9	3.8	34	26	34	30	20	14	8.6
2	2.9	2.9	4.1	4.9	3.8	34	27	33	29	20	14	8.6
3	2.9	2.8	4.3	4.9	4.3	32	26	34	26	20	14	8.6
4	2.9	2.9	3.8	4.8	4.3	31	27	34	25	19	13	8.6
5	2.9	3.1	3.3	4.6	4.3	26	27	35	25	19	13	8.6
6	2.9	3.2	3.3	4.7	7.6	26	28	33	25	19	13	8.6
7	2.9	3.1	3.3	4.8	9.0	26	31	33	24	19	13	8.2
8	2.9	3.1	3.3	4.6	7.5	25	33	33	24	19	13	8.2
9	2.9	3.1	3.3	5.1	6.8	22	34	34	24	19	13	8.2
10	2.9	3.1	3.3	4.9	7.7	21	34	36	24	19	14	8.2
11	3.0	3.3	3.1	4.9	50	24	36	36	23	19	13	8.2
12	3.0	3.4	2.9	4.9	29	23	39	35	23	19	13	7.8
13	3.0	3.6	2.9	4.9	27	21	38	35	23	20	13	7.8
14	3.1	3.7	2.9	4.9	25	20	37	35	23	18	13	7.8
15	3.3	3.6	2.9	4.6	23	20	36	34	22	17	13	7.8
16	3.3	3.8	2.9	5.8	23	20	36	34	22	16	14	7.8
17	3.3	3.8	3.4	4.9	22	20	37	34	21	15	12	7.4
18	3.4	3.6	4.1	6.2	20	22	38	33	22	14	12	7.4
19	3.6	3.6	4.1	6.0	19	22	36	35	22	14	12	7.4
20	3.6	3.6	4.1	5.1	19	26	34	34	22	14	12	7.4
21	3.4	3.5	4.1	4.8	17	26	31	33	22	13	12	7.2
22	3.3	3.5	4.1	4.5	16	26	30	32	22	14	12	7.2
23	2.8	3.5	4.1	4.3	14	25	31	31	22	15	12	7.0
24	2.8	3.2	4.1	4.2	14	26	32	32	22	15	12	7.0
25	2.8	3.2	4.2	4.1	13	26	35	31	22	15	11	7.0
26	2.8	3.3	4.3	4.0	13	27	38	31	21	14	10	6.8
27	2.8	3.3	4.3	3.8	14	27	38	30	21	14	10	6.6
28	2.8	3.3	4.3	3.8	66	27	40	31	21	14	10	6.4
29	2.9	3.3	4.3	3.8	------	26	40	31	20	15	10	6.4
30	2.9	3.6	4.3	4.0	------	26	36	30	19	15	9.5	6.2
31	2.9	------	4.4	3.8	------	26	------	30	------	14	9.5	------
TOTAL	93.6	99.9	115.9	145.5	483.1	783	1,011	1,026	691	517	379.0	229.0
MEAN	3.02	3.33	3.74	4.69	17.3	25.3	33.7	33.1	23.0	16.7	12.2	7.63
MAX	3.6	3.8	4.4	6.2	66	34	40	36	30	20	14	8.6
MIN	2.7	2.8	2.9	3.8	3.8	20	26	30	19	13	9.5	6.2
AC-FT	186	198	230	289	958	1,550	2,010	2,040	1,370	1,030	752	454

CAL YR 1972 TOTAL 2,205.5 MEAN 6.03 MAX 13 MIN 2.7 AC-FT 4,370
WTR YR 1973 TOTAL 5,574.0 MEAN 15.3 MAX 66 MIN 2.7 AC-FT 11,060

PEAK DISCHARGE (BASE, 50 CFS).--Feb. 11 (0515) 161 cfs (4.39 ft); Feb. 28 (0830) 79 cfs (3.65 ft).

10264000 LITTLE ROCK CREEK NEAR LITTLE ROCK, CALIF.

LOCATION.--Lat 34°27'47", long 118°01'04", in SW¼SW¼NE¼ sec.3, T.4 N., R.11 W., Los Angeles County, on right bank 0.3 mile upstream from Santiago Creek, 1.6 miles upstream from Little Rock Palmdale Irrigation District's dam, and 5 miles south of Little Rock.

DRAINAGE AREA.--49.0 sq mi.

PERIOD OF RECORD.--October 1930 to February 1938, May to September 1938, April 1939 to current year.

GAGE.--Water-stage recorder. Altitude of gage is 3,290 ft (from topographic map). Prior to May 1943, at site 500 ft downstream at different datums (datum changed in March 1939).

AVERAGE DISCHARGE.--41 years (1930-37, 1939-73), 16.7 cfs (12,100 acre-ft per year).

EXTREMES.--Current year: Maximum discharge, 1,880 cfs Feb. 11 (gage height, 9.75 ft); no flow Oct. 1 to Nov. 13, Aug. 29 to Sept. 30.
Period of record: Maximum discharge, 17,000 cfs (estimated) Mar. 2, 1938; no flow at times in most years.

REMARKS.--No regulation or diversion above station.

COOPERATION.--Records furnished by Los Angeles County Flood Control District and reviewed by Geological Survey.

DISCHARGE, IN CUBIC FEET PER SECOND, WATER YEAR OCTOBER 1972 TO SEPTEMBER 1973

DAY	OCT	NOV	DEC	JAN	FEB	MAR	APR	MAY	JUN	JUL	AUG	SEP
1		0	2.7	2.1	3.9	89	38	49	8.7	1.4	.20	
2		0	2.5	2.3	3.9	64	37	45	8.7	1.2	.20	
3		0	2.5	2.5	4.2	51	37	46	8.0	1.0	.60	
4		0	4.2	2.5	8.0	46	37	46	7.7	.90	.50	
5		0	8.7	2.1	7.4	40	36	45	7.4	.70	.50	
6		0	5.2	2.0	26	41	41	40	6.7	.70	.30	
7		0	4.6	2.1	60	42	54	39	6.4	.70	.20	
8		0	4.2	2.3	27	42	65	40	6.1	.60	.20	
9		0	3.4	2.7	17	40	60	40	5.2	.60	.10	
10		0	2.7	3.2	15	40	56	41	4.9	.50	.10	
11		0	2.7	2.7	556	49	65	41	4.6	.50	.10	
12		0	2.7	2.7	127	49	72	37	4.4	.50	.10	
13		0	2.7	2.7	72	45	72	35	4.4	.40	.10	
14		.30	2.5	2.7	52	41	64	32	4.4	.40	.10	
15		2.0	2.5	2.7	42	38	59	31	4.6	.40	.10	
16		2.1	2.5	4.2	34	36	56	29	4.4	.40	.10	
17		6.4	2.5	11	31	36	60	27	4.4	.40	.10	
18		3.4	2.7	11	30	36	70	27	4.4	.30	.10	
19		2.3	2.7	20	29	36	62	24	3.9	.30	.10	
20		2.3	3.4	8.7	29	45	58	22	3.4	.30	.10	
21		2.3	4.4	7.0	27	38	52	20	3.2	.30	.10	
22		2.3	4.4	6.4	25	36	49	19	3.2	.30	.10	
23		2.3	3.9	5.2	23	36	52	17	2.9	.30	.10	
24		2.3	3.6	4.9	23	38	60	15	2.7	.30	.10	
25		2.1	3.2	4.6	24	41	66	15	2.1	.30	.10	
26		2.0	2.7	4.6	25	42	74	14	2.1	.20	.10	
27		2.9	2.7	3.9	29	40	78	12	2.1	.20	.10	
28		3.6	2.7	3.6	153	37	76	11	2.0	.20	.10	
29		3.2	2.5	3.6	------	36	66	11	1.8	.20	0	
30		2.9	2.3	3.9	------	33	58	9.5	1.6	.20	0	
31		------	2.3	4.4	------	36	------	9.1	------	.20	0	------
TOTAL	0	44.70	102.3	144.3	1,503.4	1,319	1,730	888.6	136.4	14.90	4.70	0
MEAN	0	1.49	3.30	4.65	53.7	42.5	57.7	28.7	4.55	.48	.15	0
MAX	0	6.4	8.7	20	556	89	78	49	8.7	1.4	.60	0
MIN	0	0	2.3	2.0	3.9	33	36	9.1	1.6	.20	0	0
AC-FT	0	89	203	286	2,980	2,620	3,430	1,760	271	30	9.3	0

CAL YR 1972 TOTAL 1,254.57 MEAN 3.43 MAX 19 MIN 0 AC-FT 2,490
WTR YR 1973 TOTAL 5,888.30 MEAN 16.1 MAX 556 MIN 0 AC-FT 11,680

10264560 SPENCER CANYON CREEK NEAR FAIRMONT, CALIF.

LOCATION.--Lat 34°46'33", long 118°34'08", in SE¼SW¼SW¼ sec.15, T.8 N., R.16 W., Los Angeles County, on county road culvert, 8.5 miles northwest of Fairmont.

DRAINAGE AREA.--3.60 sq mi.

PERIOD OF RECORD.--Water years 1959-64 (annual maximum), August 1964 to September 1973 (discontinued).

GAGE.--Flood-hydrograph recorder and crest-stage gage. Altitude of gage is 2,950 ft (from topographic map). Jan. 19, 1959, to Aug. 26, 1964, crest-stage gage at same site and datum.

AVERAGE DISCHARGE.--9 years (1964-73), 0.053 cfs (38 acre-ft per year).

EXTREMES.--Current year: Maximum discharge, 73 cfs Feb. 11 (gage height, 10.58 ft); no flow most of year. Period of record: Maximum discharge, 290 cfs Feb. 25, 1969 (gage height, 12.50 ft, from crest-stage gage), from rating curve based on computation of flow through culvert at gage heights 11.11, 11.29, and 11.90 ft; no flow most of each year.

REMARKS.--Records fair. No regulation or diversion above station.

DISCHARGE, IN CUBIC FEET PER SECOND, WATER YEAR OCTOBER 1972 TO SEPTEMBER 1973

DAY	OCT	NOV	DEC	JAN	FEB	MAR	APR	MAY	JUN	JUL	AUG	SEP
1					0							
2					0							
3					0							
4					0							
5					0							
6					0							
7					0							
8					0							
9					0							
10					0							
11					6.1							
12					0							
13					0							
14					0							
15					0							
16					0							
17					0							
18					0							
19					0							
20					0							
21					0							
22					0							
23					0							
24					0							
25					0							
26					0							
27					0							
28					0							
29					------							
30					------							
31		------			------		------		------			------
TOTAL	0	0	0	0	6.1	0	0	0	0	0	0	0
MEAN	0	0	0	0	.22	0	0	0	0	0	0	0
MAX	0	0	0	0	6.1	0	0	0	0	0	0	0
MIN	0	0	0	0	0	0	0	0	0	0	0	0
AC-FT	0	0	0	0	12	0	0	0	0	0	0	0

CAL YR 1972 TOTAL 0.00 MEAN .0000 MAX .00 MIN 0 AC-FT .0
WTR YR 1973 TOTAL 6.10 MEAN .017 MAX 6.1 MIN 0 AC-FT 12

NOTE.--No gage-height record Oct. 1 to Sept. 30.

10264600 OAK CREEK NEAR MOJAVE, CALIF.

LOCATION.--Lat 35°03'00", long 118°21'25", in NW¼ sec.15, T.11 N., R.14 W., Kern County, on upstream right wingwall of culvert, 100 ft downstream from unnamed tributary, 0.1 mile west of junction of Oak Creek and Willow Springs Roads, and 10.5 miles west of Mojave.

DRAINAGE AREA.--15.8 sq mi.

PERIOD OF RECORD.--August 1957 to current year.

GAGE.--Water-stage recorder and concrete control. Altitude of gage is 4,100 ft (from topographic map).

AVERAGE DISCHARGE.--16 years, 0.76 cfs (551 acre-ft per year).

EXTREMES.--Current year: Maximum discharge, 1,740 cfs May 14; maximum gage height, 10.53 ft May 14, as explained below; minimum daily discharge, 0.02 cfs July 27.
Period of record: Maximum discharge, 1,740 cfs May 14, 1973, by slope-area measurement, caused by failure of small earthen dam 4 miles upstream during intense local thunderstorm; maximum gage height, 10.53 ft May 14, 1973 (ponding at culvert 0.1 mile downstream); no flow for some months in most years.

REMARKS.--Records good below 15 cfs and poor above. No regulation or diversion above station.

DISCHARGE, IN CUBIC FEET PER SECOND, WATER YEAR OCTOBER 1972 TO SEPTEMBER 1973

DAY	OCT	NOV	DEC	JAN	FEB	MAR	APR	MAY	JUN	JUL	AUG	SEP
1	.03	.08	.04	.12	.21	.39	1.0	6.7	5.3	1.7	.13	.04
2	.04	.10	.04	.13	.22	.39	.99	6.3	5.2	1.6	.16	.05
3	.04	.10	.04	.14	.23	.39	.99	4.7	4.9	1.6	.21	.05
4	.04	.11	.06	.13	.22	.64	.99	4.7	4.7	1.4	.18	.04
5	.04	.11	.05	.13	.25	.42	1.0	5.2	4.6	.66	.21	.04
6	.04	.12	.05	.13	.36	.46	.98	5.1	4.5	.51	.21	.04
7	.04	.11	.05	.13	.27	.41	.99	5.3	4.3	.50	.17	.04
8	.05	.11	.05	.14	.25	.68	1.0	5.0	4.2	.48	.15	.04
9	.05	.10	.05	.18	.25	.49	1.0	4.4	4.0	.46	.15	.05
10	.05	.10	.05	.15	.32	.44	1.0	4.8	3.9	.45	.13	.05
11	.05	.13	.05	.14	3.5	.57	1.0	4.9	3.8	.42	.12	.05
12	.06	.10	.06	.14	.73	.47	1.0	4.7	3.6	.41	.10	.05
13	.06	.10	.06	.14	.67	.49	1.2	4.9	3.5	.42	.10	.04
14	.06	.09	.05	.14	.69	.47	1.2	80	3.3	.42	.10	.04
15	.06	.09	.05	.15	.54	.42	1.3	14	3.2	.43	.09	.04
16	.06	.09	.05	.20	.48	.44	2.0	9.3	3.1	.45	.07	.04
17	.07	.08	.06	.17	.44	.47	2.8	7.8	2.9	.43	.05	.04
18	.08	.08	.05	.40	.42	.48	3.4	7.6	2.8	.39	.03	.04
19	.08	.08	.05	.31	.42	.48	4.2	7.0	2.6	.33	.03	.04
20	.08	.07	.05	.26	.39	.97	3.9	6.6	2.5	.32	.03	.04
21	.08	.07	.05	.29	.39	.99	1.0	6.6	2.4	.35	.03	.04
22	.08	.07	.05	.24	.37	.94	1.5	6.7	2.4	.34	.03	.04
23	.08	.06	.05	.22	.36	.78	3.6	6.6	2.1	.27	.03	.05
24	.08	.06	.06	.23	.35	.74	3.6	6.4	1.7	.24	.04	.05
25	.08	.06	.06	.25	.34	.77	3.9	6.3	1.5	.27	.06	.05
26	.10	.05	.07	.24	.34	.94	4.3	6.1	1.3	.16	.06	.07
27	.10	.05	.09	.21	.66	.95	5.1	6.0	1.3	.02	.07	.06
28	.10	.05	.11	.22	.56	.98	5.8	5.9	1.6	.17	.07	.05
29	.08	.04	.10	.22	------	.92	6.9	5.7	1.8	.21	.06	.06
30	.08	.04	.11	.22	------	.96	7.0	5.6	1.8	.19	.05	.06
31	.08	------	.12	.22	------	.92	------	5.4	------	.15	.05	------
TOTAL	2.02	2.50	1.88	5.99	14.23	19.86	74.64	266.3	94.8	15.75	2.97	1.39
MEAN	.065	.083	.061	.19	.51	.64	2.49	8.59	3.16	.51	.096	.046
MAX	.10	.13	.12	.40	3.5	.99	7.0	80	5.3	1.7	.21	.07
MIN	.03	.04	.04	.12	.21	.39	.98	4.4	1.3	.02	.03	.04
AC-FT	4.0	5.0	3.7	12	28	39	148	528	188	31	5.9	2.8

CAL YR 1972 TOTAL 85.29 MEAN .23 MAX 16 MIN .03 AC-FT 169
WTR YR 1973 TOTAL 502.33 MEAN 1.38 MAX 80 MIN .02 AC-FT 996

PEAK DISCHARGE (BASE, 10 CFS).--Feb. 11 (0545) 19 cfs (1.48 ft); May 14 (time unknown) 1,740 cfs (10.53 ft[1]).

1. Maximum gage height and maximum discharge occurred at different times; times unknown.

10264750 PINE TREE CREEK NEAR MOJAVE, CALIF.

LOCATION.--Lat 35°13'50", long 118°05'07", in SW¼NW¼SE¼ sec.14, T.31 S., R.36 E., Kern County, on downstream side of city of Los Angeles aqueduct-siphon pier near right bank, 0.5 mile downstream from unnamed tributary, and 13 miles northeast of Mojave.

DRAINAGE AREA.--33.5 sq mi.

PERIOD OF RECORD.--July 1958 to current year.

GAGE.--Water-stage recorder with rain-gage attachment. Altitude of gage is 2,700 ft (from topographic map). Prior to Oct. 1, 1961, at datum 3.0 ft higher.

AVERAGE DISCHARGE.--15 years, 0.20 cfs (145 acre-ft per year).

EXTREMES.--Current year: Maximum discharge, 77 cfs Nov. 17, on basis of field estimate of maximum flow; no flow most of year.
Period of record: Maximum discharge, 30,000 cfs Aug. 23, 1961, on basis of field estimate of maximum flow; no flow most of each year.

REMARKS.--Records poor. No regulation or diversion above station.

DISCHARGE, IN CUBIC FEET PER SECOND, WATER YEAR OCTOBER 1972 TO SEPTEMBER 1973

DAY	OCT	NOV	DEC	JAN	FEB	MAR	APR	MAY	JUN	JUL	AUG	SEP
1		0			0			0				
2		0			0			0				
3		0			0			0				
4		0			0			0				
5		0			0			0				
6		0			0			0				
7		0			0			0				
8		0			0			0				
9		0			0			0				
10		0			0			0				
11		0			1.6			0				
12		0			.09			0				
13		0			0			0				
14		0			0			.08				
15		0			0			0				
16		0			0			0				
17		3.2			0			0				
18		0			0			0				
19		0			0			0				
20		0			0			0				
21		0			0			0				
22		0			0			0				
23		0			0			0				
24		0			0			0				
25		0			0			0				
26		0			0			0				
27		0			0			0				
28		0			0			0				
29		0			------			0				
30		0			------			0				
31		------			------		------	0	------			------
TOTAL	0	3.2	0	0	1.69	0	0	.08	0	0	0	0
MEAN	0	.11	0	0	.060	0	0	.003	0	0	0	0
MAX	0	3.2	0	0	1.6	0	0	.08	0	0	0	0
MIN	0	0	0	0	0	0	0	0	0	0	0	0
AC-FT	0	6.3	0	0	3.4	0	0	.2	0	0	0	0
(a)	.1	.2	.2	0	.1	0	0	0	0	0	0	.3

CAL YR 1972 TOTAL 7.70 MEAN .021 MAX 4.5 MIN 0 AC-FT 15
WTR YR 1973 TOTAL 4.97 MEAN .014 MAX 3.2 MIN 0 AC-FT 9.9

a Precipitation, in inches.
NOTE.--No gage-height record Nov. 17, May 14.

10265200 CONVICT CREEK NEAR MAMMOTH LAKES, CALIF.

LOCATION.--Lat 37°36'26", long 118°50'52", in NE¼NE¼ sec.14, T.4 S., R.28 E., Mono County, on right bank 1.1 miles downstream from Convict Lake, 2.0 miles upstream from U.S. Highway 395, and 7.0 miles southeast of Mammoth Lakes (Ranger Station).

DRAINAGE AREA.--18.2 sq mi.

PERIOD OF RECORD.--July 1925 to current year. Prior to October 1959 monthly discharge only, published in WSP 1314 and 1734.

GAGE.--Water-stage recorder and wood control. Altitude of gage is 7,450 ft (from topographic map). Prior to Nov. 15, 1926, nonrecording gage at same site and datum.

AVERAGE DISCHARGE.--48 years, 24.4 cfs (17,710 acre-ft per year).

EXTREMES.--Current year: Maximum discharge, 123 cfs June 13 (gage height, 2.63 ft); minimum daily, 9.0 cfs Mar. 18, 23-27, Apr. 3-12.
Period of record: Maximum discharge, 290 cfs June 29, 1932 (gage height, 4.43 ft); minimum daily, 1.3 cfs Jan. 10, 1951.

REMARKS.--Some regulation by Convict Lake above station. No diversion above station.

COOPERATION.--Records furnished by city of Los Angeles, Department of Water and Power and reviewed by Geological Survey.

DISCHARGE, IN CUBIC FEET PER SECOND, WATER YEAR OCTOBER 1972 TO SEPTEMBER 1973

DAY	OCT	NOV	DEC	JAN	FEB	MAR	APR	MAY	JUN	JUL	AUG	SEP
1	11	13	12	11	11	12	10	22	126	93	43	23
2	11	13	12	11	11	12	10	22	121	89	43	22
3	15	13	12	11	11	12	9.0	22	123	87	43	22
4	17	13	12	11	11	12	9.0	22	124	81	43	21
5	18	13	12	11	11	12	9.0	21	124	79	43	21
6	18	13	12	11	12	11	9.0	21	125	79	43	20
7	18	13	12	11	15	11	9.0	21	126	76	43	20
8	18	13	12	11	15	11	9.0	22	126	76	40	19
9	17	13	12	11	15	11	9.0	26	128	75	38	19
10	17	13	12	11	17	11	9.0	30	129	74	37	19
11	16	13	12	11	18	12	9.0	36	129	71	36	19
12	15	13	12	11	17	11	9.0	41	130	71	34	19
13	15	12	12	11	16	11	10	49	130	71	32	18
14	14	14	12	11	15	11	10	59	130	70	33	17
15	14	14	12	11	15	11	10	65	126	67	33	16
16	14	14	12	11	15	10	10	70	118	65	32	16
17	14	13	12	12	14	10	10	74	112	63	32	16
18	14	13	12	15	13	9.0	10	87	108	60	31	16
19	13	13	12	16	13	10	10	97	106	59	30	16
20	13	13	12	14	12	10	10	101	106	57	30	16
21	13	13	12	13	11	11	10	98	106	54	30	15
22	13	13	11	13	11	10	10	94	107	51	29	16
23	13	13	11	14	11	9.0	11	93	106	51	28	15
24	13	13	11	15	11	9.0	11	94	105	49	27	14
25	13	13	11	15	11	9.0	12	98	103	47	27	14
26	13	13	11	15	11	9.0	13	96	104	46	27	14
27	13	13	11	14	11	9.0	14	93	107	44	28	14
28	14	13	11	13	13	10	17	95	114	43	27	14
29	13	13	11	12	------	10	19	104	117	43	27	14
30	12	13	11	12	------	10	21	115	118	43	26	14
31	12	------	11	11	------	10	------	119	------	43	25	------
TOTAL	444	392	362	380	367	326.0	328.0	2,007	3,534	1,977	1,040	519
MEAN	14.3	13.1	11.7	12.3	13.1	10.5	10.9	64.7	118	63.8	33.5	17.3
MAX	18	14	12	16	18	12	21	119	130	93	43	23
MIN	11	12	11	11	11	9.0	9.0	21	103	43	25	14
AC-FT	881	778	718	754	728	647	651	3,980	7,010	3,920	2,060	1,030

CAL YR 1972 TOTAL 7,161.8 MEAN 19.6 MAX 65 MIN 7.0 AC-FT 14,210
WTR YR 1973 TOTAL 11,676.0 MEAN 32.0 MAX 130 MIN 9.0 AC-FT 23,160

10265700 ROCK CREEK AT LITTLE ROUND VALLEY, NEAR BISHOP, CALIF.

LOCATION.--Lat 37°33'15", long 118°41'03", in SE¼SE¼ sec.32, T.4 S., R.30 E., Mono County, on right bank just upstream from diversion to Little Round Valley, 0.6 mile south of Toms Place, and 20 miles northwest of Bishop.

DRAINAGE AREA.--35.8 sq mi.

PERIOD OF RECORD.--January to December 1918, January 1920 to current year. Prior to October 1959 monthly discharge only, published in WSP 1314 and 1734.

GAGE.--Water-stage recorder. Parshall flume since May 1953. Altitude of gage is 7,280 ft (from topographic map). See WSP 1734 for history of changes prior to May 28, 1953.

AVERAGE DISCHARGE.--53 years (1920-73), 29.7 cfs (21,520 acre-ft per year).

EXTREMES.--Current year: Maximum discharge, 160 cfs May 31 (gage height, 3.28 ft); minimum daily, 7.0 cfs Dec. 2. 1926 to current year: Maximum discharge, 312 cfs May 30, 1969 (gage height, 5.00 ft); minimum daily, 2.2 cfs Nov. 30, 1971.

REMARKS.--No regulation or diversion above station.

COOPERATION.--Records furnished by city of Los Angeles, Department of Water and Power and reviewed by Geological Survey.

DISCHARGE, IN CUBIC FEET PER SECOND, WATER YEAR OCTOBER 1972 TO SEPTEMBER 1973

DAY	OCT	NOV	DEC	JAN	FEB	MAR	APR	MAY	JUN	JUL	AUG	SEP
1	11	9.8	7.2	11	16	13	7.7	25	142	109	38	16
2	14	9.8	7.0	11	16	13	8.2	26	122	96	39	16
3	12	9.8	7.2	9.5	16	13	7.7	28	103	81	42	15
4	14	9.8	7.2	9.8	16	13	7.7	28	94	70	45	15
5	13	9.8	11	10	16	13	8.2	26	94	66	49	15
6	13	10	11	11	16	13	8.5	26	96	68	49	14
7	12	9.8	11	11	16	12	8.7	27	105	71	45	14
8	12	9.8	12	11	14	13	8.7	31	119	71	41	13
9	12	11	13	11	14	13	9.0	37	135	71	37	13
10	11	9.8	14	11	14	13	9.2	44	136	70	34	13
11	11	9.8	14	11	14	13	9.5	56	130	68	33	13
12	11	9.8	13	11	14	13	9.8	70	123	71	31	13
13	11	10	13	11	14	13	9.2	80	118	69	29	13
14	11	10	12	11	14	13	8.7	94	115	63	28	13
15	11	11	12	11	14	12	8.5	96	103	58	27	13
16	10	11	12	11	14	12	8.7	99	86	59	27	13
17	10	11	12	11	14	11	9.8	111	74	58	27	13
18	10	12	9.0	12	14	10	9.5	123	68	57	26	14
19	11	11	8.7	13	14	10	9.2	128	68	55	26	14
20	12	15	8.5	15	14	8.5	9.0	122	72	51	25	14
21	12	16	8.2	13	14	9.8	9.5	115	77	47	24	13
22	12	11	8.2	15	14	11	10	106	81	44	23	13
23	12	16	8.0	14	14	11	12	104	80	42	21	13
24	11	12	8.0	14	14	11	13	108	74	39	20	13
25	11	9.5	8.0	14	14	11	15	107	68	37	19	13
26	11	9.5	8.0	14	14	11	17	101	75	36	21	13
27	11	9.8	7.7	15	15	11	21	94	103	36	21	13
28	11	9.8	8.2	15	13	11	25	105	137	37	20	13
29	9.5	8.5	11	15	------	11	26	125	134	38	19	13
30	11	8.2	8.7	15	------	11	26	148	119	39	18	13
31	12	------	7.7	15	------	11	------	154	------	39	17	------
TOTAL	355.5	320.3	306.5	382.3	406	364.3	350.0	2,544	3,051	1,816	921	407
MEAN	11.5	10.7	9.89	12.3	14.5	11.8	11.7	82.1	102	58.6	29.7	13.6
MAX	14	16	14	15	16	13	26	154	142	109	49	16
MIN	9.5	8.2	7.0	9.5	13	8.5	7.7	25	68	36	17	13
AC-FT	705	635	608	758	805	723	694	5,050	6,050	3,600	1,830	807

CAL YR 1972 TOTAL 6,536.4 MEAN 17.9 MAX 65 MIN 7.0 AC-FT 12,960
WTR YR 1973 TOTAL 11,223.9 MEAN 30.8 MAX 154 MIN 7.0 AC-FT 22,260

10267000 PINE CREEK AT DIVISION BOX, NEAR BISHOP, CALIF.

LOCATION.--Lat 37°24'59", long 118°37'15", in SE¼NW¼ sec.19, T.6 S., R.31 E., Inyo County, on right bank 0.2 mile upstream from division box (at Rovana), 1.9 miles west of Round Valley schoolhouse, and 13 miles northwest of Bishop.

DRAINAGE AREA.--36.4 sq mi.

PERIOD OF RECORD.--October 1921 to current year. Prior to October 1959 monthly discharge only, published in WSP 1314 and 1734.

GAGE.--Water-stage recorder. Parshall flume since November 1938. Altitude of gage is 5,280 ft (from topographic map).

AVERAGE DISCHARGE.--52 years, 45.2 cfs (32,750 acre-ft per year).

EXTREMES.--Current year: Maximum discharge, 296 cfs June 27 (gage height, 4.83 ft); minimum daily, 20 cfs Mar. 13-15, 17-19, 22.
Period of record: Maximum discharge, 509 cfs July 2, 1967 (gage height, 6.05 ft); minimum daily, 10 cfs Jan. 8, 1930, Jan. 21, 1935.

REMARKS.--No regulation or diversion above station.

COOPERATION.--Records furnished by city of Los Angeles, Department of Water and Power and reviewed by Geological Survey.

DISCHARGE, IN CUBIC FEET PER SECOND, WATER YEAR OCTOBER 1972 TO SEPTEMBER 1973

DAY	OCT	NOV	DEC	JAN	FEB	MAR	APR	MAY	JUN	JUL	AUG	SEP
1	25	23	23	22	22	22	21	46	167	175	62	35
2	24	23	23	21	22	21	21	43	141	140	65	34
3	26	22	23	21	22	21	21	46	144	132	65	33
4	28	22	24	21	22	21	21	48	162	132	80	33
5	27	22	23	21	22	21	21	45	179	137	71	33
6	28	22	23	21	22	21	22	42	191	144	67	32
7	29	22	22	21	22	21	22	42	217	137	62	33
8	29	21	23	22	22	21	22	52	234	137	60	31
9	29	21	23	22	22	21	23	71	240	133	58	31
10	28	22	23	21	22	21	22	94	213	129	56	30
11	27	22	22	21	22	21	23	118	213	130	52	30
12	27	23	22	21	22	21	25	133	203	133	49	30
13	27	23	22	21	23	20	25	138	195	118	46	30
14	26	24	23	21	23	20	25	119	171	112	47	29
15	26	23	22	21	22	20	25	114	137	108	47	29
16	26	24	22	22	22	21	25	137	125	103	46	29
17	26	24	22	22	22	20	25	159	133	96	47	29
18	25	24	22	23	22	20	25	170	130	84	45	27
19	26	24	22	23	22	20	26	175	148	80	45	29
20	26	24	22	22	22	21	26	167	156	75	44	29
21	26	24	22	22	22	21	26	138	163	77	42	30
22	26	24	22	22	22	20	26	139	163	74	42	29
23	26	24	22	23	22	21	27	144	142	68	40	29
24	26	24	22	23	22	21	28	166	133	61	40	29
25	25	24	22	23	22	21	31	144	152	59	38	29
26	25	23	22	23	22	21	37	126	183	60	39	29
27	23	23	22	23	21	21	42	146	260	61	40	28
28	24	23	22	23	21	21	45	198	233	62	40	28
29	24	23	21	23	------	21	45	231	204	63	38	28
30	24	23	21	22	------	21	47	222	200	62	37	28
31	23	------	21	22	------	21	------	213	------	62	36	------
TOTAL	807	690	690	679	616	645	820	3,826	5,332	3,144	1,546	903
MEAN	26.0	23.0	22.3	21.9	22.0	20.8	27.3	123	178	101	49.9	30.1
MAX	29	24	24	23	23	22	47	231	260	175	80	35
MIN	23	21	21	21	21	20	21	42	125	59	36	27
AC-FT	1,600	1,370	1,370	1,350	1,220	1,280	1,630	7,590	10,580	6,240	3,070	1,790

CAL YR 1972 TOTAL 14,031 MEAN 38.3 MAX 151 MIN 21 AC-FT 27,830
WTR YR 1973 TOTAL 19,698 MEAN 54.0 MAX 260 MIN 20 AC-FT 39,070

10268700 SILVER CANYON CREEK NEAR LAWS, CALIF.

LOCATION--Lat 37°24'28", long 118°16'43", in Inyo National Forest, Inyo County, on right bank 1.7 miles upstream from mouth of canyon, 3.7 miles east of Laws. Feb. 24, 1943, to Sept. 30, 1972, at site 1.7 miles downstream.

DRAINAGE AREA.--19.7 sq mi; at site Feb. 24, 1943, to Sept. 30, 1972, 21.6 sq mi; prior to Feb. 24, 1943, 22.4 sq mi.

PERIOD OF RECORD.--March 1930 to current year. Prior to October 1959 monthly discharge only, published in WSP 1314 and 1734.

GAGE.--Water-stage recorder and Parshall flume. Altitude of gage is 5,120 ft (from topographic map). Feb. 24, 1943, to Sept. 30, 1972, at site 1.7 miles downstream at different datum. Prior to Feb. 24, 1943, nonrecording gage and Cipolletti weir at site 3.2 miles downstream at different datum.

AVERAGE DISCHARGE.--43 years, 1.64 cfs (1,190 acre-ft per year).

EXTREMES.--Current year: Maximum discharge, 3.0 cfs June 1 (gage height, 0.78 ft); minimum daily, 1.2 cfs Mar. 29, 30.
Period of record: Maximum discharge, 9.6 cfs June 16, 1969 (gage height, 1.65 ft, site and datum then in use); no flow at times in some years.

REMARKS.--No regulation; occasional diversion above station.

COOPERATION.--Records furnished by city of Los Angeles, Department of Water and Power and reviewed by Geological Survey.

DISCHARGE, IN CUBIC FEET PER SECOND, WATER YEAR OCTOBER 1972 TO SEPTEMBER 1973

DAY	OCT	NOV	DEC	JAN	FEB	MAR	APR	MAY	JUN	JUL	AUG	SEP
1	1.6	1.8	1.7	1.7	1.6	1.5	1.3	1.8	2.7	2.4	2.2	2.3
2	1.6	1.8	1.7	1.7	1.6	1.5	1.4	1.8	2.7	2.4	2.2	2.3
3	1.5	1.8	1.8	1.7	1.6	1.5	1.5	1.8	2.7	2.4	2.2	2.3
4	1.6	1.8	1.7	1.7	1.6	1.5	1.5	1.8	2.7	2.4	2.2	2.3
5	1.6	1.8	1.8	1.7	1.6	1.5	1.5	1.8	2.7	2.4	2.2	2.3
6	1.6	1.8	1.8	1.7	1.6	1.5	1.5	1.9	2.7	2.4	2.2	2.3
7	1.6	1.8	1.8	1.7	1.6	1.5	1.5	1.9	2.7	2.4	2.3	2.3
8	1.6	1.8	1.8	1.7	1.6	1.5	1.5	1.9	2.7	2.4	2.3	2.3
9	1.6	1.8	1.8	1.7	1.6	1.5	1.5	1.9	2.7	2.4	2.3	2.3
10	1.7	1.8	1.7	1.7	1.6	1.5	1.5	2.0	2.7	2.4	2.3	2.3
11	1.7	1.8	1.7	1.7	1.6	1.5	1.5	2.0	2.7	2.3	2.3	2.3
12	1.7	1.8	1.7	1.7	1.6	1.5	1.5	2.0	2.7	2.3	2.3	2.3
13	1.7	1.8	1.7	1.6	1.6	1.5	1.5	2.1	2.7	2.3	2.3	2.3
14	1.7	1.8	1.7	1.6	1.6	1.5	1.5	2.1	2.7	2.3	2.3	2.3
15	1.7	1.8	1.7	1.6	1.6	1.5	1.5	2.1	2.7	2.3	2.3	2.3
16	1.7	1.8	1.7	1.7	1.6	1.5	1.5	2.2	2.7	2.3	2.3	2.3
17	1.7	1.8	1.7	1.7	1.6	1.5	1.5	2.2	2.6	2.3	2.3	2.3
18	1.7	1.8	1.7	1.7	1.6	1.5	1.5	2.2	2.6	2.3	2.3	2.3
19	1.8	1.8	1.7	1.7	1.6	1.5	1.5	2.3	2.6	2.3	2.3	2.3
20	1.8	1.8	1.7	1.7	1.6	1.5	1.5	2.3	2.6	2.3	2.3	2.3
21	1.8	1.8	1.7	1.6	1.6	1.5	1.5	2.3	2.5	2.2	2.3	2.3
22	1.8	1.7	1.7	1.6	1.6	1.5	1.6	2.4	2.5	2.2	2.3	2.3
23	1.7	1.7	1.7	1.6	1.5	1.5	1.7	2.4	2.5	2.2	2.3	2.3
24	1.8	1.8	1.7	1.6	1.5	1.5	1.7	2.5	2.5	2.2	2.3	2.3
25	1.8	1.7	1.7	1.6	1.5	1.5	1.7	2.5	2.5	2.2	2.3	2.3
26	1.8	1.7	1.7	1.6	1.5	1.5	1.7	2.6	2.5	2.2	2.3	2.3
27	1.8	1.7	1.7	1.6	1.5	1.5	1.7	2.6	2.5	2.2	2.3	2.3
28	1.8	1.7	1.7	1.6	1.5	1.4	1.7	2.6	2.5	2.2	2.3	2.3
29	1.8	1.7	1.7	1.6	------	1.2	1.8	2.7	2.5	2.2	2.3	2.3
30	1.8	1.7	1.7	1.6	------	1.2	1.8	2.7	2.5	2.2	2.3	2.3
31	1.8	------	1.7	1.6	------	1.3	------	2.7	------	2.2	2.3	------
TOTAL	52.9	53.2	53.3	51.3	44.2	45.6	46.6	68.1	78.6	71.2	70.7	69.0
MEAN	1.71	1.77	1.72	1.65	1.58	1.47	1.55	2.20	2.62	2.30	2.28	2.30
MAX	1.8	1.8	1.8	1.7	1.6	1.5	1.8	2.7	2.7	2.4	2.3	2.3
MIN	1.5	1.7	1.7	1.6	1.5	1.2	1.3	1.8	2.5	2.2	2.2	2.3
AC-FT	105	106	106	102	88	90	92	135	156	141	140	137

CAL YR 1972 TOTAL 544.3 MEAN 1.49 MAX 2.0 MIN 1.0 AC-FT 1,080
WTR YR 1973 TOTAL 704.7 MEAN 1.93 MAX 2.7 MIN 1.2 AC-FT 1,400

10271210 BISHOP CREEK BELOW POWERPLANT NO. 6, NEAR BISHOP, CALIF.

LOCATION.--Lat 37°20'59", long 118°27'41", in SE¼SE¼ sec.9, T.7 S., R.32 E., Inyo County, below powerplant No. 6 tailrace, and 3.6 miles west of Bishop.

DRAINAGE AREA.--104 sq mi (Natural flow).

PERIOD OF RECORD.--October 1936 to current year. Monthly and yearly mean discharges prior to October 1969, published in WRD Calif. 1971.

GAGE.--None.

AVERAGE DISCHARGE (Actual flow).--38 years, 98.5 cfs (71,360 acre-ft per year).
(Natural flow).--38 years, 106 cfs (76,800 acre-ft per year).

EXTREMES (Actual flow).--Current year: Maximum daily discharge, 337 cfs June 28; minimum daily, 60 cfs many days. Period of record (1970 to current year): Maximum daily discharge, 337 cfs June 28, 1973; minimum daily, 46 cfs Apr. 30, 1972.

REMARKS.--Flow regulated for power development by South Lake, Lake Sabrina, and Intake No. 2 Reservoir (combined capacity, 20,660 acre-ft) and many powerhouses. Records for "actual flow" include Bishop Creek above powerplant No. 6 tailrace and Bishop Creek powerplant No. 6 conduit. Records for "natural flow" include "actual flow" of Bishop Creek below powerplant No. 6, Abelour ditch near Bishop, minus Birch-McGee diversion to Bishop Creek powerplant near Bishop, and the change in contents and evaporation for South Lake, Lake Sabrina, and Intake No. 2 Reservoir.

COOPERATION.--Records furnished by Southern California Edison Co. and reviewed by Geological Survey, in connection with a Federal Power Commission project.

DISCHARGE, IN CUBIC FEET PER SECOND, WATER YEAR OCTOBER 1972 TO SEPTEMBER 1973

DAY	OCT	NOV	DEC	JAN	FEB	MAR	APR	MAY	JUN	JUL	AUG	SEP
1	71	60	68	63	63	86	101	104	175	302	165	103
2	72	60	71	60	61	91	100	132	158	265	165	86
3	66	60	71	60	61	101	100	130	150	233	170	80
4	66	61	71	61	61	100	100	131	148	214	193	86
5	64	62	69	62	60	100	100	128	149	213	192	90
6	69	62	72	62	60	101	100	132	149	218	190	90
7	62	62	70	62	62	100	100	131	158	215	181	90
8	62	62	72	62	61	101	101	130	170	217	169	90
9	64	60	73	62	61	100	100	131	181	219	161	90
10	62	60	72	61	60	100	101	131	185	223	154	90
11	60	60	72	61	61	100	101	137	186	268	150	90
12	62	60	72	60	61	101	101	136	264	313	145	90
13	62	60	72	61	61	101	98	151	298	306	132	90
14	62	69	72	61	61	100	101	153	285	289	124	91
15	62	68	72	60	71	100	100	157	255	273	130	92
16	62	68	71	61	77	101	101	146	217	259	133	92
17	62	66	72	61	75	100	92	146	202	246	133	92
18	62	62	72	61	75	100	77	155	190	236	132	92
19	62	61	73	61	76	100	78	166	192	226	126	92
20	62	61	72	61	76	100	79	169	212	210	124	92
21	62	60	70	61	75	100	78	157	232	199	118	91
22	62	60	71	61	81	100	78	152	252	191	114	91
23	62	60	72	61	88	100	78	151	237	182	109	91
24	61	60	71	62	86	102	78	151	214	174	110	91
25	62	60	71	63	87	108	80	150	211	168	110	91
26	63	60	73	62	87	107	104	149	240	162	107	91
27	62	60	72	62	86	107	111	150	297	165	109	90
28	60	60	72	61	87	109	111	150	337	166	109	91
29	63	60	74	61	------	102	107	159	333	166	108	91
30	60	60	72	61	------	100	111	174	327	166	106	90
31	60	------	72	62	------	100	------	178	------	166	107	------
TOTAL	1,953	1,844	2,219	1,900	1,981	3,118	2,867	4,517	6,604	6,850	4,276	2,716
MEAN	63.0	61.5	71.6	61.3	70.8	101	95.6	146	220	221	138	90.5
MAX	72	69	74	63	88	109	111	178	337	313	193	103
MIN	60	60	68	60	60	86	77	104	148	162	106	80
AC-FT	3,870	3,660	4,400	3,770	3,930	6,180	5,690	8,960	13,100	13,590	8,480	5,390
(a)	2,790	2,310	2,410	2,560	2,390	2,320	3,330	16,010	21,370	14,150	7,370	3,300

CAL YR 1972 TOTAL 27,486 MEAN 75.1 MAX 137 MIN 46 AC-FT 54,520 a 50,870
WTR YR 1973 TOTAL 40,845 MEAN 112 MAX 337 MIN 60 AC-FT 81,020 a 80,310

a Computed natural flow, in acre-feet.

10276000 BIG PINE CREEK NEAR BIG PINE, CALIF.

LOCATION.--Lat 37°08'42", long 118°18'52", in SW¼SW¼SE¼ sec.24, T.9 S., R.33 E., Inyo County, on left bank 0.3 mile downstream from Little Pine Creek, 0.5 mile downstream from powerhouse No. 3, and 2.2 miles southwest of Big Pine.

DRAINAGE AREA.--39.0 sq mi.

PERIOD OF RECORD.--November 1907 to February 1911, January 1920 to current year; combined records of creek and diversions, June 1930 to current year. Monthly discharge only for some periods, published in WSP 1314 and 1734.

GAGE.--Water-stage recorder and Parshall flume since April 1949 on creek; water-stage recorder and Parshall flume on each diversion. Altitude of gage is 4,500 ft (from topographic map). Prior to January 1923, nonrecording gage at same site and datum.

AVERAGE COMBINED DISCHARGE.--43 years (1930-73), 41.1 cfs (29,780 acre-ft per year).

EXTREMES (Creek only).--Current year: Maximum discharge, 192 cfs June 9 (gage height, 3.68 ft); minimum daily, 5.1 cfs Apr. 3.
Period of record: Maximum discharge, 458 cfs July 3, 1932 (gage height, 6.55 ft); no flow Dec. 3-12, 1935.
(Combined flow).--Current year: Maximum discharge, 201 cfs June 9; minimum daily, 11 cfs Jan. 18, 19, Apr. 3-5.
Period of record: Maximum discharge, 458 cfs July 3, 1932; minimum daily, 6.4 cfs Dec. 11, 12, 1935.

REMARKS.--No regulation above station. Diversions above station for power and irrigation. At times since 1962 discharge from Little Pine Creek has been spread in nearby meadows and does not reach gage as surface flow. For records of combined discharge of Big Pine Creek and Giroux ditches which divert above station, see following page.

COOPERATION.--Records furnished by city of Los Angeles, Department of Water and Power and reviewed by Geological Survey.

DISCHARGE, IN CUBIC FEET PER SECOND, WATER YEAR OCTOBER 1972 TO SEPTEMBER 1973

DAY	OCT	NOV	DEC	JAN	FEB	MAR	APR	MAY	JUN	JUL	AUG	SEP
1	15	13	11	9.0	8.5	9.0	6.7	17	115	156	77	21
2	19	13	11	9.5	8.5	8.7	6.7	16	94	136	77	23
3	16	13	11	9.5	8.5	8.7	5.1	17	94	111	86	23
4	18	12	11	10	8.5	8.5	5.6	16	109	111	99	22
5	17	12	9.8	9.8	8.5	8.5	6.2	17	116	122	93	21
6	17	12	10	9.8	9.0	8.5	7.2	16	130	128	83	21
7	17	13	9.5	9.8	9.5	8.5	7.4	17	147	123	68	21
8	16	13	9.8	9.2	8.7	8.5	7.4	20	163	124	65	20
9	15	13	10	10	8.7	8.5	8.0	28	178	124	68	20
10	15	13	11	9.5	9.8	8.5	8.2	35	171	129	62	20
11	14	13	11	9.2	9.0	8.7	8.5	40	166	138	56	20
12	14	12	12	9.2	12	8.5	9.2	45	151	142	54	20
13	14	13	12	8.7	11	8.5	9.0	47	144	128	54	21
14	14	14	11	8.5	10	8.2	8.5	47	132	120	60	21
15	14	14	11	8.5	9.8	8.5	8.2	49	109	118	66	20
16	14	14	11	9.8	9.2	8.5	8.5	49	85	106	75	20
17	14	14	11	9.8	9.2	8.2	11	52	84	100	67	20
18	14	13	11	7.4	9.2	8.2	10	58	86	89	60	18
19	14	13	11	7.4	9.0	8.5	9.8	65	105	80	58	16
20	15	13	10	9.8	9.0	8.5	9.8	63	116	79	54	16
21	15	11	9.8	10	8.5	8.5	10	54	119	75	48	16
22	14	11	10	9.8	8.7	8.5	10	52	125	74	46	15
23	14	11	9.8	9.5	8.5	8.2	11	55	107	68	44	14
24	14	11	9.8	9.2	8.7	8.5	12	62	91	65	33	13
25	14	11	9.8	9.2	8.7	8.2	14	58	113	66	30	13
26	14	11	9.5	9.2	8.7	8.2	16	61	147	72	28	12
27	13	11	9.5	9.0	9.2	7.7	20	73	171	80	24	12
28	13	11	9.0	9.0	9.5	7.4	21	100	175	72	21	13
29	12	11	9.5	9.0	------	7.2	20	135	175	77	21	13
30	12	11	9.5	8.7	------	7.0	19	147	168	69	27	12
31	13	------	9.5	8.7	------	7.2	------	143	------	68	24	------
TOTAL	454	370	320.8	285.7	256.1	256.8	314.0	1,654	3,886	3,150	1,728	537
MEAN	14.6	12.3	10.3	9.22	9.15	8.28	10.5	53.4	130	102	55.7	17.9
MAX	19	14	12	10	12	9.0	21	147	178	156	99	23
MIN	12	11	9.0	7.4	8.5	7.0	5.1	16	84	65	21	12
AC-FT	901	734	636	567	508	509	623	3,280	7,710	6,250	3,430	1,070

CAL YR 1972 TOTAL 8,848.0 MEAN 24.2 MAX 156 MIN 6.7 AC-FT 17,550
WTR YR 1973 TOTAL 13,212.4 MEAN 36.2 MAX 178 MIN 5.1 AC-FT 26,210

10276000 BIG PINE CREEK NEAR BIG PINE, CALIF.--Continued

COMBINED DISCHARGE, IN CUBIC FEET PER SECOND, OF BIG PINE CREEK AND UPPER AND LOWER GIROUX DITCHES, NEAR BIG PINE, CALIF., WATER YEAR OCTOBER 1972 TO SEPTEMBER 1973

DAY	OCT	NOV	DEC	JAN	FEB	MAR	APR	MAY	JUN	JUL	AUG	SEP
1	21	16	15	13	12	13	12	22	124	168	89	32
2	23	16	15	13	12	13	12	21	102	148	89	34
3	21	16	15	13	12	13	11	23	103	124	98	34
4	22	16	16	14	12	12	11	22	118	123	111	33
5	21	16	14	14	12	12	11	22	124	134	105	32
6	21	16	14	14	13	12	12	21	138	140	95	32
7	21	16	14	14	13	12	13	25	156	135	80	32
8	21	16	14	13	12	12	13	29	171	136	77	31
9	20	16	14	14	12	12	13	36	186	136	80	31
10	19	16	15	13	13	12	13	42	179	141	75	31
11	18	16	15	13	12	13	14	48	175	150	69	31
12	18	16	16	13	15	12	14	55	160	154	66	31
13	18	16	17	13	14	12	14	57	152	140	66	32
14	18	17	16	12	14	12	14	57	141	133	72	32
15	18	17	15	12	13	12	13	58	118	131	78	31
16	18	17	15	14	13	12	14	59	94	118	87	31
17	18	17	15	14	13	12	14	61	93	112	79	30
18	18	16	15	11	13	12	14	67	95	101	72	28
19	18	16	15	11	13	12	14	74	114	92	70	27
20	19	16	14	13	13	12	14	72	125	91	66	27
21	19	15	14	14	12	12	15	63	129	87	60	26
22	18	16	14	14	12	12	15	61	137	86	58	26
23	18	15	14	13	12	12	16	65	119	81	56	24
24	18	15	14	13	12	12	17	71	103	77	45	23
25	18	16	14	13	12	12	20	67	125	78	41	23
26	18	16	14	13	12	13	22	70	159	84	40	22
27	17	15	14	13	13	13	25	82	183	92	35	22
28	17	15	13	13	13	12	27	109	187	85	32	23
29	16	15	13	13	------	12	25	144	187	89	32	23
30	15	15	14	12	------	12	25	155	180	81	38	22
31	16	------	14	12	------	12	------	152	------	80	35	------
TOTAL	581	477	451	404	354	378	467	1,910	4,177	3,527	2,096	856
MEAN	18.7	15.9	14.5	13.0	12.6	12.2	15.6	61.6	139	114	67.6	28.5
MAX	23	17	17	14	15	13	27	155	187	168	111	34
MIN	15	15	13	11	12	12	11	21	93	77	32	22
AC-FT	1,150	946	895	801	702	750	926	3,790	8,290	7,000	4,160	1,700

CAL YR 1972 TOTAL 11,646 MEAN 31.8 MAX 170 MIN 11 AC-FT 23,100
WTR YR 1973 TOTAL 15,678 MEAN 43.0 MAX 187 MIN 11 AC-FT 31,100

10277500 OWENS RIVER NEAR BIG PINE, CALIF.

LOCATION.--Lat 37°00'55", long 118°13'25", in NW¼SE¼ sec.2, T.11 S., R.34 E., Inyo County, on left bank 0.1 mile downstream from Little Seeley Spring, 0.2 mile downstream from Charlies Butte, and 10.8 miles southeast of Big Pine.

DRAINAGE AREA.--1,977 sq mi.

PERIOD OF RECORD.--January 1906 to current year. Monthly discharge only for some periods, published in WSP 1314. Prior to 1912 published as "near Tinemaha".

GAGE.--Water-stage recorder. Rock control since October 1958. Altitude of gage is 3,800 ft (from topographic map). Prior to Oct. 8, 1922, nonrecording gage at same site and datum.

EXTREMES.--Current year: Maximum daily discharge, 834 cfs Sept. 18; minimum daily, 12 cfs Sept. 5.
Period of record: Maximum discharge, 3,220 cfs (estimated) Jan. 26, 1914 (gage height, 11.2 ft), from rating curve extended above 1,100 cfs; no flow Jan. 9-13, 21-26, 1937.

REMARKS.--Flow regulated since 1941 by Lake Crowley (capacity, 183,500 acre-ft) and several small reservoirs (combined capacity, 41,400 acre-ft). Diversions from both main stream and tributaries. Water imported from Mono Lake basin since 1941 for diversion to Los Angeles aqueduct which diverts 4 miles downstream.

COOPERATION.--Records furnished by city of Los Angeles, Department of Water and Power and reviewed by Geological Survey.

DISCHARGE, IN CUBIC FEET PER SECOND, WATER YEAR OCTOBER 1972 TO SEPTEMBER 1973

DAY	OCT	NOV	DEC	JAN	FEB	MAR	APR	MAY	JUN	JUL	AUG	SEP
1	379	549	275	431	359	680	649	350	269	600	631	658
2	379	551	560	428	359	538	648	347	268	600	631	658
3	376	552	401	402	360	322	645	345	266	600	645	592
4	374	553	315	382	359	314	648	345	263	597	678	178
5	378	552	315	379	359	310	648	343	263	597	681	12
6	378	552	314	348	360	307	651	341	263	595	684	160
7	378	552	313	347	360	307	651	390	263	595	687	625
8	472	552	312	350	359	305	646	521	263	595	684	705
9	580	531	372	350	358	305	648	527	263	592	681	700
10	582	499	372	348	361	303	646	530	263	594	681	702
11	586	497	372	347	363	300	647	587	261	592	681	716
12	589	497	372	348	360	228	645	619	311	590	679	755
13	586	497	372	347	640	117	645	535	362	590	679	757
14	585	500	372	346	641	115	643	524	371	589	679	759
15	584	150	453	349	645	114	643	478	398	590	678	51
16	585	150	453	357	650	115	643	440	479	592	681	358
17	582	150	453	345	652	114	632	437	485	592	684	774
18	585	150	453	354	650	115	610	436	487	592	685	834
19	586	150	453	360	650	115	609	414	517	592	683	816
20	540	150	453	354	652	113	609	380	544	590	681	801
21	476	100	453	354	650	113	609	379	547	589	684	780
22	474	55	454	350	650	113	611	377	568	587	685	763
23	474	55	454	353	655	112	610	374	596	589	690	746
24	474	55	455	353	680	112	450	375	593	589	727	731
25	472	55	454	353	680	111	350	373	596	586	716	717
26	474	55	453	353	681	113	350	371	599	584	702	706
27	472	55	454	350	681	112	350	373	605	604	688	697
28	474	55	454	342	682	253	350	373	605	633	676	692
29	476	55	454	346	------	630	350	374	605	630	666	683
30	477	55	453	350	------	640	350	371	607	631	660	678
31	503	------	454	350	------	648	------	351	------	631	658	------
TOTAL	15,330	8,929	12,747	11,126	14,856	8,094	17,186	12,980	12,780	18,527	21,045	18,804
MEAN	495	298	411	359	531	261	573	419	426	598	679	627
MAX	589	553	560	431	682	680	651	619	607	633	727	834
MIN	374	55	275	342	358	111	350	341	261	584	631	12
AC-FT	30,410	17,710	25,280	22,070	29,470	16,050	34,090	25,750	25,350	36,750	41,740	37,300

CAL YR 1972 TOTAL 184,182 MEAN 503 MAX 698 MIN 55 AC-FT 365,300
WTR YR 1973 TOTAL 172,404 MEAN 472 MAX 834 MIN 12 AC-FT 342,000

10281800 INDEPENDENCE CREEK BELOW PINYON CREEK, NEAR INDEPENDENCE, CALIF.

LOCATION.--Lat 36°46'43", long 118°15'49", in NE¼SE¼NW¼ sec.27, T.13 S., R.34 E., Inyo County, on right bank 0.2 mile downstream from Pinyon Creek, and 4.0 miles southwest of Independence.

DRAINAGE AREA.--18.1 sq mi.

PERIOD OF RECORD.--January 1923 to current year. Prior to October 1959 monthly discharge only, published in WSP 1734.

GAGE.--Water-stage recorder and Parshall flume (Cipolletti weir used during low flow). Altitude of gage is 5,300 ft (from topographic map). See WSP 1734 for history of changes prior to Dec. 13, 1936.

AVERAGE DISCHARGE.--50 years, 12.6 cfs (9,130 acre-ft per year).

EXTREMES.--Current year: Maximum discharge, 59 cfs June 9 (gage height, 2.29 ft); minimum daily, 0.80 cfs Jan. 5. Period of record: Maximum discharge, 169 cfs June 1, 1969 (gage height, 4.45 ft); minimum daily, 0.70 cfs Jan. 25, 1926, Dec. 15, 1935.

REMARKS.--No regulation or diversion above station.

COOPERATION.--Records furnished by city of Los Angeles, Department of Water and Power and reviewed by Geological Survey.

DISCHARGE, IN CUBIC FEET PER SECOND, WATER YEAR OCTOBER 1972 TO SEPTEMBER 1973

DAY	OCT	NOV	DEC	JAN	FEB	MAR	APR	MAY	JUN	JUL	AUG	SEP
1	2.3	2.0	1.8	2.3	1.8	2.4	2.3	12	47	51	22	9.5
2	2.4	2.0	1.8	1.6	1.8	2.3	2.3	12	48	49	23	9.1
3	2.3	1.9	1.7	1.8	1.8	2.3	2.3	13	48	47	24	8.9
4	2.5	1.9	2.6	1.4	1.8	2.3	2.3	14	49	45	24	8.5
5	2.5	1.9	1.5	.80	1.8	2.3	2.3	14	50	44	25	8.3
6	2.4	1.9	2.2	1.1	1.9	2.2	2.5	13	54	44	24	7.7
7	2.3	2.0	2.3	1.5	1.9	2.2	2.9	14	56	44	22	7.5
8	2.2	2.0	1.9	1.8	1.8	2.2	3.2	16	56	44	21	7.7
9	2.2	1.9	1.2	1.9	1.8	2.0	3.3	18	56	43	20	7.7
10	2.2	2.0	2.3	2.2	2.2	2.2	3.3	22	56	42	20	7.7
11	2.2	2.0	2.8	2.2	2.9	2.2	3.3	28	54	42	19	7.5
12	2.2	2.0	2.6	1.9	2.6	2.2	4.4	35	52	45	18	7.2
13	2.2	2.0	2.6	1.8	2.5	2.2	4.5	34	51	46	18	7.0
14	2.2	2.6	2.2	1.8	2.4	2.0	4.2	39	49	43	19	6.8
15	2.2	2.6	2.0	1.7	2.3	2.0	4.1	43	47	40	18	6.8
16	2.2	3.2	2.0	2.5	2.2	2.0	4.1	41	44	39	17	6.6
17	2.2	3.0	2.3	2.5	2.2	2.0	4.5	39	42	37	17	6.6
18	2.2	2.5	2.3	2.8	2.0	2.0	4.5	40	43	36	16	6.4
19	2.2	2.3	2.4	2.2	2.0	2.2	4.4	41	45	34	16	6.0
20	2.4	1.7	2.3	3.0	2.0	2.3	4.2	44	45	33	16	5.7
21	2.4	2.0	1.8	3.5	1.9	2.2	4.1	45	46	31	15	5.7
22	2.3	2.3	1.8	2.6	1.9	2.4	3.8	44	46	30	14	5.5
23	2.2	2.0	1.7	2.4	1.9	2.4	4.4	43	47	29	13	5.4
24	2.0	2.0	1.7	2.4	1.9	2.4	5.5	43	46	27	13	5.4
25	2.0	2.0	1.6	2.2	2.0	2.4	6.4	43	49	26	12	5.4
26	2.3	2.2	1.7	2.0	2.0	2.6	8.1	43	50	25	13	5.5
27	2.0	2.0	1.7	1.8	2.2	2.5	9.7	41	51	25	12	5.4
28	2.0	1.9	1.8	2.0	2.6	2.5	12	37	52	24	11	5.2
29	1.7	1.9	2.0	2.0	------	2.5	13	39	52	22	11	5.0
30	1.7	1.8	1.7	1.9	------	2.4	13	47	52	22	10	5.0
31	1.8	------	1.6	1.8	------	2.4	------	46	------	21	9.7	------
TOTAL	67.9	63.5	61.9	63.40	58.1	70.2	148.9	1,003	1,483	1,130	532.7	202.7
MEAN	2.19	2.12	2.00	2.05	2.08	2.26	4.96	32.4	49.4	36.5	17.2	6.76
MAX	2.5	3.2	2.8	3.5	2.9	2.6	13	47	56	51	25	9.5
MIN	1.7	1.7	1.2	.80	1.8	2.0	2.3	12	42	21	9.7	5.0
AC-FT	135	126	123	126	115	139	295	1,990	2,940	2,240	1,060	402

CAL YR 1972 TOTAL 1,479.60 MEAN 4.04 MAX 17 MIN 1.2 AC-FT 2,930
WTR YR 1973 TOTAL 4,885.30 MEAN 13.4 MAX 56 MIN .80 AC-FT 9,690

10284800 INYO CREEK NEAR LONE PINE, CALIF.

LOCATION.--Lat 36°35'50", long 118°10'55", in SE¼SE¼ sec.29, T.15 S., R.35 E., Inyo County, Inyo National Forest, at culvert on Mount Whitney Road, 7 miles west of Lone Pine.

DRAINAGE AREA.--1.54 sq mi.

PERIOD OF RECORD.--Water years 1963-68 (annual maximum), May 1968 to September 1973 (discontinued).

GAGE.--Water-stage recorder with rain-gage attachment. Altitude of gage is 6,000 ft (from topographic map). Prior to May 9, 1968, crest-stage gage at same site at datum 2.05 ft lower.

AVERAGE DISCHARGE.--5 years, 0.42 cfs (304 acre-ft per year).

EXTREMES.--Current year: Maximum discharge, 13 cfs Jan. 14 (gage height, 4.26 ft); no flow many days. Period of record: Maximum discharge, 42 cfs Aug. 2, 1969 (gage height, 7.57 ft), from rating curve extended above 6.6 cfs on basis of culvert computations of flow at gage heights 4.9 and 7.57 ft; no flow most of each year.

REMARKS.--Records poor. No regulation or diversion above station. Rainfall data incomplete.

DISCHARGE, IN CUBIC FEET PER SECOND, WATER YEAR OCTOBER 1972 TO SEPTEMBER 1973

DAY	OCT	NOV	DEC	JAN	FEB	MAR	APR	MAY	JUN	JUL	AUG	SEP
1				0				0	6.6	1.7	.08	
2				0				0	6.7	1.7	.06	
3				0				0	6.8	1.6	.01	
4				0				0	7.1	1.4	0	
5				0				0	7.5	1.4	0	
6				0				.15	7.7	1.3	0	
7				0				.90	7.8	1.1	0	
8				0				1.4	7.9	1.0	0	
9				0				2.8	8.0	.90	0	
10				0				3.1	7.9	.80	0	
11				0				4.3	7.8	.70	0	
12				0				5.2	7.6	.50	0	
13				0				6.0	7.3	.50	0	
14				1.1				6.6	7.1	.40	0	
15				0				7.2	6.8	.40	0	
16				0				5.9	6.4	.30	0	
17				0				5.6	5.9	.30	0	
18				0				5.6	5.4	.28	0	
19				0				6.0	5.1	.28	0	
20				0				6.2	4.7	.26	0	
21				0				6.2	4.5	.24	0	
22				0				6.2	4.1	.22	0	
23				0				6.1	3.8	.18	0	
24				0				6.0	3.5	.16	0	
25				0				6.0	3.1	.15	0	
26				0				5.9	2.8	.15	0	
27				0				5.7	2.6	.13	0	
28				0				5.4	2.3	.12	0	
29				0	------			6.0	2.1	.12	0	
30				0	------			6.6	1.9	.10	0	
31		------		0	------		------	6.6	------	.09	0	------
TOTAL	0	0	0	1.1	0	0	0	133.65	168.8	18.48	.15	0
MEAN	0	0	0	.036	0	0	0	4.31	5.63	.60	.005	0
MAX	0	0	0	1.1	0	0	0	7.2	8.0	1.7	.08	0
MIN	0	0	0	0	0	0	0	0	1.9	.09	0	0
AC-FT	0	0	0	2.2	0	0	0	265	335	37	.3	0

CAL YR 1972 TOTAL 1.96 MEAN .005 MAX .98 MIN 0 AC-FT 3
WTR YR 1973 TOTAL 322.18 MEAN .88 MAX 8.0 MIN 0 AC-FT 639

NOTE.--No gage-height record Oct. 16 to May 14, May 19 to July 18.

10285700 OWENS RIVER AT KEELER BRIDGE, NEAR LONE PINE, CALIF.

LOCATION.--Lat 36°34'46", long 118°01'06", in NE¼NW¼NW¼ sec.1, T.16 S., R.36 E., Inyo County, on left bank under old timber bridge 0.5 mile upstream from bridge on State Highway 190, and 3.4 miles southeast of Lone Pine.

DRAINAGE AREA.--2,604 sq mi.

PERIOD OF RECORD.--January 1927 to current year. Prior to October 1959 monthly discharge only, published in WSP 1314 and 1734.

GAGE.--Water-stage recorder and Cipolletti weir. Altitude of gage is 3,600 ft (from topographic map). See WSP 1734 for history of changes prior to Feb. 14, 1935. Feb. 14, 1935, to Nov. 22, 1964, water-stage recorder and Cipolletti weir at same site and datum. Nov. 23, 1964, to June 26, 1967, nonrecording gage and Cipolletti weir at same site and datum.

EXTREMES.--Current year: Maximum daily discharge, 72 cfs Sept. 17 (gage height, unknown); no flow July 10 to Aug. 31.
Period of record: Maximum daily discharge, 1,360 cfs June 19, 1969 (gage height, 5.98 ft); no flow at times in some years.

REMARKS.--Natural flow affected by storage in several reservoirs, many natural lakes, diversions for irrigation, and return flow from irrigated areas. Major portion of discharge from basin is diverted through Los Angeles Aqueduct. Discharge reported herein is wasted into Owens Lake.

COOPERATION.--Records furnished by city of Los Angeles, Department of Water and Power and reviewed by Geological Survey.

DISCHARGE, IN CUBIC FEET PER SECOND, WATER YEAR OCTOBER 1972 TO SEPTEMBER 1973

DAY	OCT	NOV	DEC	JAN	FEB	MAR	APR	MAY	JUN	JUL	AUG	SEP
1	2.6	4.2	6.7	7.9	9.8	12	10	4.5	2.6	.62		.10
2	2.8	4.2	7.0	7.9	9.8	12	9.5	7.6	2.6	.49		.49
3	3.0	4.2	7.0	8.2	9.8	12	9.2	5.5	2.4	.49		.62
4	3.0	4.2	6.7	8.2	10	11	8.8	4.5	2.4	.49		.49
5	3.7	4.5	6.7	8.2	10	10	8.8	4.0	2.2	.38		.49
6	3.7	4.5	7.0	8.2	10	10	9.2	4.0	2.0	.27		.49
7	3.7	4.2	7.0	7.6	10	10	8.8	3.7	2.2	.17		.49
8	3.7	4.2	7.3	7.6	10	11	8.8	3.7	2.4	.17		.62
9	3.7	4.2	7.0	8.2	10	11	8.8	3.5	2.2	.10		.62
10	3.7	4.5	7.0	8.2	11	11	8.8	3.5	1.8	0		.76
11	4.0	4.5	7.0	8.5	12	11	8.8	3.7	1.6	0		2.2
12	4.0	4.5	6.7	8.8	12	10	8.5	3.7	1.2	0		2.2
13	4.0	4.5	6.7	8.8	12	10	6.7	3.5	1.2	0		1.8
14	4.2	4.5	6.7	9.2	13	10	5.8	3.7	1.2	0		1.4
15	4.5	5.0	6.4	9.2	12	10	5.3	4.0	1.2	0		1.2
16	3.7	5.0	6.7	9.5	12	9.8	5.0	3.7	1.2	0		1.1
17	3.5	5.5	7.0	10	12	9.8	5.0	3.5	1.2	0		72
18	3.5	5.8	7.0	12	12	9.8	4.7	3.5	1.1	0		43
19	3.7	5.8	7.3	13	12	9.8	4.5	3.2	1.1	0		18
20	3.7	6.1	7.3	13	12	9.5	4.7	3.0	1.1	0		12
21	3.7	6.1	7.6	14	12	9.5	8.2	3.0	.91	0		8.5
22	3.7	6.1	8.2	12	12	9.8	12	3.0	.91	0		6.1
23	3.7	6.1	8.2	12	12	9.8	11	2.8	.76	0		5.0
24	3.7	6.1	8.2	10	12	9.5	10	2.8	.76	0		4.0
25	3.7	6.1	8.2	10	12	9.8	8.2	2.6	.62	0		4.0
26	3.7	6.4	8.2	10	12	9.8	7.6	2.6	.62	0		4.0
27	4.0	6.4	8.2	10	12	10	7.3	2.4	.62	0		4.0
28	4.0	6.7	8.2	10	12	10	6.4	2.4	.76	0		4.0
29	4.0	6.7	7.9	10	------	10	5.0	2.4	.76	0		4.0
30	4.0	6.7	7.9	10	------	12	4.5	2.4	.62	0		4.0
31	4.0	------	7.9	10	------	11	------	2.4	------	0		------
TOTAL	114.6	157.5	226.9	300.2	317.4	320.9	229.9	108.8	42.24	3.18	0	207.67
MEAN	3.70	5.25	7.32	9.68	11.3	10.4	7.66	3.51	1.41	.10	0	6.92
MAX	4.5	6.7	8.2	14	13	12	12	7.6	2.6	.62	0	72
MIN	2.6	4.2	6.4	7.6	9.8	9.5	4.5	2.4	.62	0	0	.10
AC-FT	227	312	450	595	630	637	456	216	84	6.3	0	412

CAL YR 1972 TOTAL 2,355.97 MEAN 6.44 MAX 13 MIN .18 AC-FT 4,670
WTR YR 1973 TOTAL 2,029.29 MEAN 5.56 MAX 72 MIN 0 AC-FT 4,030

10286000 COTTONWOOD CREEK NEAR OLANCHA, CALIF.

LOCATION.--Lat 36°26'20", long 118°04'48", (unsurveyed), Inyo County, Inyo National Forest, just downstream from intake to Cottonwood powerhouse, and 11.2 miles north of Olancha.

DRAINAGE AREA.--40.1 sq mi.

PERIOD OF RECORD.--January 1906 to March 1911, January 1914 to current year; combined records of creek and flow through powerhouse, November 1938 to current year. Monthly discharge only January 1914 to September 1959, published in WSP 1314 and 1734.

GAGE.--Water-stage recorder and Parshall flume (Cipolletti weir used during low flow) on creek, destroyed by flood of May 15, 1969; water-stage recorder and Cipolletti weir on powerhouse diversion. Altitude of gage is 4,660 ft (from topographic map). See WSP 1734 for history of changes prior to Oct. 31, 1938. Since May 15, 1969, supplementary gage at site 5.0 miles downstream at different datum.

AVERAGE COMBINED DISCHARGE.--63 years (1906-10, 1914-73), 22.5 cfs (16,300 acre-ft per year).

EXTREMES (Creek only).--Current year: Maximum daily discharge, 175 cfs May 31; minimum daily, 0.05 cfs Nov. 6 to Dec. 2.
Period of record: Maximum discharge, 520 cfs June 3, 1969 (gage height, unknown); no flow for some days in some years.
(Combined flow).--Current year: Maximum daily discharge, 187 cfs May 31; minimum daily, 3.4 cfs Oct. 30, Dec. 5.
Period of record: Maximum discharge, 520 cfs June 3, 1969; minimum daily, 1.0 cfs July 22, 23, 1961.

REMARKS.--No regulation above station. Cottonwood powerhouse (maximum capacity, 22 cfs) has diverted since Nov. 13, 1908. Discharge figures for creek only are estimated by correlation with station 3.0 miles downstream at the Los Angeles Aqueduct. For records of combined discharge of Cottonwood Creek and powerhouse, see following page.

COOPERATION.--Records furnished by city of Los Angeles, Department of Water and Power and reviewed by Geological Survey.

REVISIONS.--Revised figures of discharge for the water year 1972, superseding those published in WRD Calif., 1972, are given herein. The maximum daily discharge (creek only) for the water year 1972 has been revised to 8.0 cfs Mar. 14-16, 29, 30.

DISCHARGE, IN CUBIC FEET PER SECOND, WATER YEAR OCTOBER 1971 TO SEPTEMBER 1972

DAY	OCT	NOV	DEC	JAN	FEB	MAR	APR	MAY	JUN	JUL	AUG	SEP
1	.50	.50	.50	.30	.20	.30	.30	1.5	.20	.20	.10	.10
2	.50	.50	.50	.30	.20	.30	.30	1.5	.20	.20	.10	.10
3	.50	.50	.50	.30	.20	.30	.30	1.5	.20	.20	.10	.10
4	.50	.50	.50	.30	.20	.30	.30	1.5	.20	.20	.10	.10
5	.50	.50	.50	.30	.20	.30	.30	1.5	.20	.20	.10	.10
6	.50	.50	.50	.30	.20	.50	.30	1.0	.20	.20	.10	.10
7	.50	.50	.50	.30	.20	.50	.30	1.0	.20	.20	.10	.10
8	.50	.50	.50	.30	.20	.70	.30	1.0	.20	.20	.10	.10
9	.50	.50	.50	.30	.20	.70	.30	1.0	.20	.20	.10	.10
10	.50	.50	.50	.30	.20	.90	.30	1.0	.20	.20	.10	.10
11	.50	.50	.50	.30	.20	1.0	.30	.50	.30	.20	.10	.10
12	.50	.50	.50	.30	.20	1.0	.30	.50	.30	.20	.10	.10
13	.50	.50	.50	.30	.20	1.0	.30	.50	.30	.20	.10	.10
14	.50	.50	.50	.30	.20	8.0	.30	.50	.30	.20	.10	.10
15	.50	.50	.50	.30	.20	8.0	.30	.50	.30	.20	.10	.10
16	.50	.50	.50	.30	.20	8.0	.30	.30	.30	.20	.10	.10
17	.50	.50	.50	.30	.20	7.0	.30	.30	.30	.20	.10	.10
18	.50	.50	.50	.30	.20	2.5	.30	.30	.30	.20	.10	.10
19	.50	.50	.50	.30	.20	3.5	.30	.30	.30	.20	.10	.10
20	.50	.50	.50	.30	.20	3.5	.30	.30	.30	.20	.10	.10
21	.50	.50	.50	.30	.20	4.0	.30	.20	.20	.20	.10	.10
22	.50	.50	.50	.30	.20	4.0	.30	.20	.20	.20	.10	.10
23	.50	.50	.50	.30	.20	2.5	.30	.20	.20	.20	.10	.10
24	.50	.50	.50	.30	.20	2.5	.30	.20	.20	.20	.10	.10
25	.50	.50	.50	.30	.20	3.0	.30	.20	.20	.20	.10	.10
26	.50	.50	.50	.30	.20	2.5	.30	.20	.20	.20	.10	.10
27	.50	.50	.50	.20	.20	2.0	.30	.20	.20	.20	.10	.10
28	.50	.50	.50	.20	.20	4.5	.30	.20	.20	.20	.10	.10
29	.50	.50	.50	.20	.20	8.0	.30	.20	.20	.20	.10	.10
30	.50	.50	.50	.20	------	8.0	.30	.20	.20	.20	.10	.10
31	.50	------	.50	.20	------	5.0	------	.20	------	.20	.10	------
TOTAL	15.50	15.00	15.50	8.80	5.80	94.30	9.00	18.70	7.00	6.20	3.10	3.00
MEAN	.50	.50	.50	.28	.20	3.04	.30	.60	.23	.20	.10	.10
MAX	.50	.50	.50	.30	.20	8.0	.30	1.5	.30	.20	.10	.10
MIN	.50	.50	.50	.20	.20	.30	.30	.20	.20	.20	.10	.10
AC-FT	31	30	31	17	12	187	18	37	14	12	6.1	6.0

CAL YR 1971 TOTAL 1,418.98 MEAN 3.89 MAX 24 MIN 0 AC-FT 2,810
WTR YR 1972 TOTAL 201.90 MEAN .55 MAX 8.0 MIN .10 AC-FT 400

NOTE.--Figures for Cottonwood powerhouse diversion were inadvertently published as Cottonwood Creek for the water year 1972.

10286000 COTTONWOOD CREEK NEAR OLANCHA, CALIF.--Continued

DISCHARGE, IN CUBIC FEET PER SECOND, WATER YEAR OCTOBER 1972 TO SEPTEMBER 1973

DAY	OCT	NOV	DEC	JAN	FEB	MAR	APR	MAY	JUN	JUL	AUG	SEP
1	.10	.10	.05	.10	.10	.15	.20	31	141	29	.50	.50
2	.10	.10	.05	.10	.10	.15	.20	30	131	27	.50	.50
3	.10	.10	.10	.10	.10	.15	.20	32	125	25	3.5	.50
4	.10	.10	.10	.10	.10	.15	.20	41	120	23	2.0	6.0
5	.10	.10	.10	.10	.10	.15	.20	51	119	22	.50	9.0
6	.10	.05	.10	.10	.10	.15	.20	49	118	22	.50	8.5
7	.10	.05	.10	.10	.10	.15	.20	55	118	20	.50	4.5
8	.10	.05	.10	.10	.10	.15	.20	60	117	18	.50	.50
9	.10	.05	.10	.10	.10	.20	.20	73	117	17	.50	.50
10	.10	.05	.10	.10	.10	.20	.20	86	112	17	.50	.50
11	.10	.05	.10	.10	.10	.20	.20	113	111	14	5.2	.50
12	.10	.05	.10	.10	.10	.20	.20	126	103	13	6.6	.50
13	.10	.05	.10	.10	.10	.20	.20	127	98	13	8.0	.50
14	.10	.05	.10	.10	.15	.20	.20	145	88	12	7.4	.50
15	.10	.05	.10	.10	.15	.20	.20	147	80	10	4.8	.50
16	.10	.05	.10	.10	.15	.20	.20	149	72	9.0	1.4	.50
17	.10	.05	.10	.10	.15	.20	.20	161	67	8.3	.50	.50
18	.10	.05	.10	.10	.15	.20	.20	165	62	7.8	.50	.50
19	.10	.05	.10	.10	.15	.20	1.4	172	59	7.8	.50	.50
20	.10	.05	.10	.10	.15	.20	.48	168	55	5.6	.50	.50
21	.10	.05	.10	.10	.15	.20	.57	168	52	4.5	.50	.50
22	.10	.05	.10	.10	.15	.20	.40	165	47	4.0	2.0	.50
23	.10	.05	.10	.10	.15	.20	.57	161	45	3.8	.50	.50
24	.10	.05	.10	.10	.15	.20	.48	159	43	5.0	.50	.50
25	.10	.05	.10	.10	.15	.20	.76	155	42	1.5	.50	.50
26	.10	.05	.10	.10	.15	.20	5.1	141	38	.50	.50	.50
27	.10	.05	.10	.10	.15	.20	12	141	37	.50	.50	.50
28	.10	.05	.10	.10	.15	.20	25	147	38	.50	.50	.50
29	.10	.05	.10	.10	------	.20	42	149	35	.50	.50	.50
30	.10	.05	.10	.10	------	.20	35	153	32	3.5	.50	.50
31	.10	------	.10	.10	------	.20	------	175	------	.50	.50	------
TOTAL	3.10	1.75	3.00	3.10	3.55	5.80	127.36	3,695	2,422	345.30	51.90	41.00
MEAN	.10	.058	.097	.10	.13	.19	4.25	119	80.7	11.1	1.67	1.37
MAX	.10	.10	.10	.10	.15	.20	42	175	141	29	8.0	9.0
MIN	.10	.05	.05	.10	.10	.15	.20	30	32	.50	.50	.50
AC-FT	6.1	3.5	6.0	6.1	7.0	12	253	7,330	4,800	685	103	81

CAL YR 1972 TOTAL 163.75 MEAN .45 MAX 8.0 MIN .05 AC-FT 325
WTR YR 1973 TOTAL 6,702.86 MEAN 18.4 MAX 175 MIN .05 AC-FT 13,300

10286000 COTTONWOOD CREEK NEAR OLANCHA, CALIF.--Continued

COMBINED DISCHARGE, IN CUBIC FEET PER SECOND, OF COTTONWOOD CREEK AND POWERHOUSE NEAR OLANCHA, CALIF., WATER YEAR OCTOBER 1972 TO SEPTEMBER 1973

DAY	OCT	NOV	DEC	JAN	FEB	MAR	APR	MAY	JUN	JUL	AUG	SEP
1	4.8	4.6	5.0	5.3	6.4	6.8	6.8	31	158	49	20	10
2	4.6	4.3	5.0	5.3	6.1	6.8	6.2	36	148	44	20	10
3	4.1	4.3	5.3	5.3	6.1	6.4	6.5	43	142	45	20	10
4	5.1	4.1	5.1	5.1	6.1	6.4	6.5	47	137	43	22	9.8
5	5.3	3.9	3.4	4.1	6.4	6.4	6.8	51	136	42	22	9.2
6	4.6	3.8	4.3	4.1	6.4	6.4	7.0	53	134	40	20	8.5
7	4.3	4.0	5.1	4.1	6.4	6.8	7.9	57	133	40	20	8.3
8	4.3	4.0	4.8	4.6	6.4	6.4	8.2	64	134	38	20	8.5
9	4.3	4.0	4.1	4.6	6.4	6.5	8.7	73	133	37	18	8.2
10	4.3	4.0	4.1	4.3	6.7	6.5	8.7	86	128	35	16	8.2
11	4.3	4.0	4.1	4.3	6.7	6.5	9.0	113	127	34	16	8.2
12	4.3	4.0	4.1	4.6	6.9	6.2	9.6	126	120	33	15	8.7
13	4.3	4.2	4.1	4.6	7.8	6.2	10	127	115	33	16	8.7
14	4.3	4.6	4.8	4.6	7.8	5.9	9.6	145	107	32	18	8.7
15	4.3	4.6	5.3	4.6	7.8	6.5	9.0	147	99	27	19	8.7
16	4.3	5.0	5.1	5.6	7.2	6.2	9.4	149	89	29	14	8.5
17	4.3	5.0	5.1	5.1	7.0	6.2	10	161	86	28	14	8.5
18	4.3	5.0	5.1	4.3	6.8	6.2	10	165	77	28	14	8.2
19	5.1	5.2	5.1	4.1	6.8	6.2	10	172	79	28	12	8.2
20	4.8	5.0	5.3	4.6	6.4	6.2	11	168	75	23	12	7.9
21	5.3	5.0	5.3	5.3	6.2	5.9	12	168	72	24	14	7.9
22	5.1	5.6	5.3	5.1	6.2	6.2	11	165	64	24	12	7.6
23	4.8	6.0	5.3	5.3	5.8	6.5	14	161	65	24	12	7.6
24	4.6	6.4	5.3	5.3	5.8	6.5	18	159	63	22	12	7.3
25	4.6	5.6	5.3	5.6	5.8	6.5	21	165	59	22	10	7.3
26	4.6	6.0	5.3	5.8	6.2	7.0	25	157	58	20	10	7.3
27	4.6	5.8	5.3	6.1	6.4	6.8	32	159	57	20	12	7.3
28	4.6	5.6	5.3	6.7	6.4	6.8	35	163	58	20	12	7.3
29	3.9	5.6	5.3	7.5	------	6.5	43	163	54	20	10	7.3
30	3.4	5.0	5.3	7.5	------	6.5	36	170	53	20	10	7.3
31	4.1	------	5.3	6.7	------	7.0	------	187	------	20	12	------
TOTAL	139.6	144.2	152.6	160.1	183.4	199.9	417.9	3,831	2,960	944	474	249.2
MEAN	4.50	4.81	4.92	5.16	6.55	6.45	13.9	124	98.7	30.5	15.3	8.31
MAX	5.3	6.4	5.3	7.5	7.8	7.0	43	187	158	49	22	10
MIN	3.4	3.8	3.4	4.1	5.8	5.9	6.2	31	53	20	10	7.3
AC-FT	277	286	303	318	364	397	829	7,600	5,870	1,870	940	494

CAL YR 1972 TOTAL 2,611.7 MEAN 7.14 MAX 19 MIN 1.7 AC-FT 5,180
WTR YR 1973 TOTAL 9,855.9 MEAN 27.0 MAX 187 MIN 3.4 AC-FT 19,550

10287000 MONO LAKE NEAR MONO LAKE, CALIF.

LOCATION.--Lat 37°58'46", long 119°08'11", in NW¼ sec.5, T.2 N., R.26 E., Mono County, on west bank 1 mile south of town of Mono Lake.

DRAINAGE AREA.--785 sq mi.

PERIOD OF RECORD.--June 1912 to current year. Records prior to September 1934, published in WSP 765.

GAGE.--Nonrecording gage or reference point read once a week. Gage heights prior to October 1944 are converted to elevations above mean sea level in WSP 1314. Gage readings have been reduced to elevations above mean sea level.

EXTREMES.--Period of record: Maximum elevation observed, 6,428.1 ft July 18, 1919, present datum; minimum observed, 6,382.80 ft Sept. 26, 1973.

REMARKS.--Since 1941 water diverted to Owens Lake basin via Mono tunnel (capacity, 200 cfs).

COOPERATION.--Records furnished by city of Los Angeles, Department of Water and Power.

ELEVATION, IN FEET, WATER YEAR OCTOBER 1972 TO SEPTEMBER 1973

Date	Elevation	Date	Elevation	Date	Elevation	Date	Elevation
Oct. 5	6,384.33	Jan. 9	6,383.96	Apr. 25	6,384.25	July 9	6,383.78
10	6,384.28	24	6,384.04	May 2	6,384.22	16	6,383.76
17	6,384.17	Feb. 1	6,384.06	10	6,384.16	23	6,383.69
27	6,384.16	7	6,384.09	14	6,384.19	30	6,383.70
Nov. 2	6,384.08	16	6,384.19	23	6,384.16	Aug. 6	6,383.45
16	6,384.12	23	6,384.18	June 1	6,384.10	13	6,383.40
21	6,384.03	Mar. 7	6,384.28	4	6,384.07	20	6,383.39
28	6,383.98	15	6,384.31	11	6,384.03	29	6,383.28
Dec. 5	6,383.98	22	6,384.32	18	6,383.88	Sept. 6	6,383.04
15	6,383.88	27	6,384.33	25	6,383.92	20	6,382.92
27	6,383.95	Apr. 5	6,384.29	July 2	6,383.85	26	6,382.80
Jan. 2	6,383.94	16	6,384.30				

10287070 MILL CREEK BELOW LUNDY LAKE, NEAR MONO LAKE, CALIF.

LOCATION.--Lat 38°01'58", long 119°12'53", in SE¼NE¼ sec.16, T.2 N., R.25 E., Mono County, Inyo National Forest, at road crossing 1,500 ft downstream from Lundy Lake Dam, and 4.9 miles northwest of Mono Lake Post Office.

DRAINAGE AREA.--18.1 sq mi (Natural flow).

PERIOD OF RECORD.--October 1942 to current year. Monthly and yearly mean discharges prior to October 1969, published in WRD Calif. 1971.

GAGE.--Water-stage recorder and Parshall flume on creek. Altitude of gage is 7,760 ft (from topographic map).

AVERAGE DISCHARGE (Actual flow).--32 years, 28.7 cfs (20,790 acre-ft per year).
(Natural flow).--32 years, 30.6 cfs (22,170 acre-ft per year).

EXTREMES (Actual flow).--Current year: Maximum daily discharge, 117 cfs June 14; minimum daily, 5.9 cfs Nov. 22. Period of record (1970 to current year): Maximum daily discharge, 117 cfs June 14, 1973; no flow Apr. 13-18, 1971.

REMARKS.--Flow regulated for power development by Lundy Lake (capacity, 3,820 acre-ft). Records for "actual flow" include Mill Creek, Lundy powerplant tailrace, and Upper Conway ditch. Records for "natural flow" are computed as the "actual flow" plus change in contents and evaporation of Lundy Lake.

COOPERATION.--Records furnished by Southern California Edison Co. and reviewed by Geological Survey, in connection with a Federal Power Commission project.

DISCHARGE, IN CUBIC FEET PER SECOND, WATER YEAR OCTOBER 1972 TO SEPTEMBER 1973

DAY	OCT	NOV	DEC	JAN	FEB	MAR	APR	MAY	JUN	JUL	AUG	SEP
1	14	8.8	6.5	10	8.6	9.0	9.6	11	85	92	27	22
2	14	8.8	6.7	10	8.6	9.0	9.6	11	86	92	28	22
3	14	8.8	6.7	9.6	8.8	9.0	9.6	11	86	92	31	22
4	14	8.8	6.9	9.2	8.8	9.0	33	18	86	84	34	22
5	14	8.8	6.9	9.2	8.8	9.0	67	29	87	84	34	22
6	12	8.8	6.9	9.2	8.8	7.4	46	29	87	91	38	20
7	10	8.8	6.9	9.2	8.8	9.2	20	29	88	91	40	14
8	10	8.8	6.9	9.2	9.0	9.1	20	30	88	91	40	14
9	10	7.1	6.9	8.6	9.0	9.1	25	30	89	90	40	14
10	10	6.5	6.9	7.6	9.1	9.0	41	30	91	91	40	14
11	10	6.7	6.9	7.7	9.1	9.0	42	36	91	90	40	14
12	11	6.7	6.9	7.8	9.2	9.0	24	48	91	90	40	14
13	11	6.7	6.9	7.8	9.2	9.0	12	48	101	88	40	14
14	11	6.7	6.9	7.8	9.4	9.0	11	54	117	87	40	14
15	11	6.7	6.9	7.8	9.4	9.0	11	60	108	86	40	14
16	11	6.7	6.9	7.8	9.4	9.0	11	61	98	85	40	14
17	11	6.7	6.9	7.8	9.4	9.0	11	62	96	83	40	14
18	11	6.7	6.9	7.8	9.4	9.0	11	62	92	82	39	14
19	11	6.7	7.1	8.2	9.2	9.0	11	65	88	80	38	14
20	11	7.3	8.2	8.6	9.2	9.2	11	66	88	79	37	15
21	11	7.6	7.0	8.6	9.0	9.2	11	68	87	79	30	15
22	11	5.9	9.0	8.6	9.0	9.1	11	72	87	78	26	15
23	11	6.2	10	8.6	8.9	9.1	11	78	86	76	26	15
24	11	6.2	10	8.6	8.9	9.1	11	79	86	75	26	15
25	9.4	6.2	10	8.6	8.9	9.2	11	80	86	74	26	15
26	8.8	6.2	10	8.6	8.9	9.2	11	78	87	73	27	15
27	8.8	6.2	10	8.6	8.9	9.3	11	79	88	72	26	15
28	8.4	6.4	10	8.8	9.0	9.3	11	80	88	73	26	15
29	8.4	6.0	10	8.8	------	9.4	11	80	88	72	26	15
30	8.6	6.5	10	8.8	------	9.5	11	80	89	72	26	15
31	8.8	------	10	8.6	------	9.6	------	83	------	46	26	------
TOTAL	336.2	215.0	244.7	266.1	252.7	281.0	545.8	1,647	2,715	2,538	1,037	477
MEAN	10.8	7.17	7.89	8.58	9.03	9.06	18.2	53.1	90.5	81.9	33.5	15.9
MAX	14	8.8	10	10	9.4	9.6	67	83	117	92	40	22
MIN	8.4	5.9	6.5	7.6	8.6	7.4	9.6	11	85	46	26	14
AC-FT	667	426	485	528	501	557	1,080	3,270	5,390	5,030	2,060	946
(a)	689	536	523	487	491	542	940	4,960	6,140	3,630	1,740	706

CAL YR 1972 TOTAL 6,955.8 MEAN 19.0 MAX 71 MIN 5.9 AC-FT 13,800 a 14,040
WTR YR 1973 TOTAL 10,555.5 MEAN 28.9 MAX 117 MIN 5.9 AC-FT 20,940 a 21,380

a Computed natural flow, in acre-feet.

10287290 RUSH CREEK BELOW AGNEW LAKE, NEAR JUNE LAKE, CALIF.

LOCATION.--Lat 37°45'32", long 119°07'47", in NE¼SW¼ sec.20, T.2 S., R.26 E., Mono County, Inyo National Forest, 500 ft downstream from Agnew Lake Dam, and 3.4 miles southwest of town of June Lake.

DRAINAGE AREA.--23.3 sq mi (Natural flow).

PERIOD OF RECORD.--October 1951 to current year. Monthly and yearly mean discharges prior to October 1969, published in WRD Calif. 1971.

GAGE.--Water-stage recorder and Parshall flume on creek. Altitude of gage is 8,480 ft (from topographic map).

AVERAGE DISCHARGE (Actual flow).--22 years, 55.3 cfs (40,060 acre-ft per year).
(Natural flow).--22 years, 60.5 cfs (43,830 acre-ft per year).

EXTREMES (Actual flow).--Current year: Maximum daily discharge, 214 cfs June 30; minimum daily, 11 cfs Sept. 30. Period of record (1970 to current year): Maximum daily discharge, 214 cfs June 30, 1973; minimum daily, 11 cfs Sept. 30, 1973.

REMARKS.--Flow regulated for power development by Waugh, Gem, and Agnew Lakes (combined capacity, 23,420 acre-ft) and Rush Creek powerplant. "Actual flow" is total flow of Rush Creek below Agnew Lake and Rush Creek powerplant tailrace. "Natural flow" is the sum of "actual flow", change in contents and evaporation for Waugh, Gem, and Agnew Lakes.

COOPERATION.--Records furnished by Southern California Edison Co. and reviewed by Geological Survey, in connection with a Federal Power Commission project.

DISCHARGE, IN CUBIC FEET PER SECOND, WATER YEAR OCTOBER 1972 TO SEPTEMBER 1973

DAY	OCT	NOV	DEC	JAN	FEB	MAR	APR	MAY	JUN	JUL	AUG	SEP
1	42	31	30	32	30	54	54	78	104	184	96	24
2	44	31	26	31	31	56	54	86	104	142	96	22
3	38	31	31	32	32	54	52	92	105	121	96	21
4	32	32	33	31	32	54	56	90	89	119	95	22
5	34	31	31	28	31	54	66	90	103	115	96	19
6	32	37	32	28	31	52	64	90	100	109	96	18
7	30	37	31	31	32	52	66	91	104	124	96	27
8	32	38	30	31	31	52	66	93	105	118	96	20
9	34	42	41	31	31	52	64	95	110	113	97	21
10	32	31	43	29	32	52	64	99	109	103	76	21
11	32	32	34	28	31	54	66	100	108	102	58	20
12	34	31	31	29	30	52	64	102	109	101	62	20
13	34	31	31	30	29	52	66	104	108	99	62	20
14	32	52	31	31	34	52	66	87	106	98	62	21
15	32	66	31	31	50	52	66	105	105	97	63	19
16	33	66	30	33	50	52	70	100	104	97	62	23
17	32	53	32	33	50	52	74	107	103	97	62	22
18	32	31	31	31	50	52	74	106	103	97	62	18
19	32	31	31	30	50	52	76	107	102	97	61	18
20	31	33	32	31	50	52	76	105	102	96	60	24
21	30	31	33	31	49	54	76	105	101	97	52	20
22	35	30	33	31	49	54	75	96	101	96	49	18
23	32	31	33	31	49	52	76	96	101	94	47	23
24	34	30	33	30	50	54	76	104	101	96	39	31
25	33	30	33	31	49	52	77	105	101	93	34	42
26	40	30	33	31	38	52	76	103	113	96	35	22
27	42	31	31	33	50	52	78	104	122	96	27	33
28	33	30	32	30	55	54	78	102	136	96	19	26
29	34	32	33	29	------	52	76	102	159	96	19	12
30	33	32	33	30	------	52	78	102	214	96	17	11
31	32	------	32	30	------	52	------	103	------	96	22	------
TOTAL	1,052	1,074	1,001	948	1,126	1,634	2,070	3,049	3,332	3,281	1,914	658
MEAN	33.9	35.8	32.3	30.6	40.2	52.7	69.0	98.4	111	106	61.7	21.9
MAX	44	66	43	33	55	56	78	107	214	184	97	42
MIN	30	30	26	28	29	52	52	78	89	93	17	11
AC-FT	2,090	2,130	1,990	1,880	2,230	3,240	4,110	6,050	6,610	6,510	3,800	1,310
(a)	885	710	482	575	567	397	1,680	17,870	15,620	4,830	1,560	111

CAL YR 1972 TOTAL 16,374 MEAN 44.7 MAX 97 MIN 21 AC-FT 32,480 a 34,340
WTR YR 1973 TOTAL 21,139 MEAN 57.9 MAX 214 MIN 11 AC-FT 41,930 a 45,290

a Computed natural flow, in acre-feet.

10287400 RUSH CREEK ABOVE GRANT LAKE, NEAR JUNE LAKE, CALIF.

LOCATION.--Lat 37°48'23", long 119°06'29", in NE¼ sec.4, T.2 S., R.26 E., Mono County, on left bank in narrows, 0.6 mile upstream from Grant Lake, and 2.7 miles northwest of town of June Lake.

DRAINAGE AREA.--51.3 sq mi.

PERIOD OF RECORD.--December 1936 to current year. Prior to October 1959 monthly discharge only, published in WSP 1314 and 1734.

GAGE.--Water-stage recorder and Parshall flume. Altitude of gage is 7,200 ft (from topographic map).

AVERAGE DISCHARGE.--36 years (1937-73), 81.8 cfs (59,260 acre-ft per year).

EXTREMES.--Current year: Maximum discharge, 282 cfs June 30 (gage height, 2.69 ft); minimum daily, 22 cfs Sept. 30.
Period of record: Maximum discharge, 1,070 cfs July 14, 1967 (gage height, 6.20 ft); minimum daily, 5.5 cfs Sept. 6-8, 14, 1954.

REMARKS.--Flow regulated by Gem Lake, Lake Agnew, Waugh Lake (combined capacity, 23,400 acre-ft) and by many natural lakes. No diversion above station.

COOPERATION.--Records furnished by city of Los Angeles, Department of Water and Power and reviewed by Geological Survey.

DISCHARGE, IN CUBIC FEET PER SECOND, WATER YEAR OCTOBER 1972 TO SEPTEMBER 1973

DAY	OCT	NOV	DEC	JAN	FEB	MAR	APR	MAY	JUN	JUL	AUG	SEP
1	50	41	45	42	40	63	65	125	254	260	117	31
2	56	41	40	42	40	64	66	126	235	216	117	32
3	56	41	40	40	41	64	64	135	221	187	119	31
4	49	43	45	40	42	64	65	143	207	168	120	31
5	47	42	44	38	42	63	76	135	216	164	119	30
6	47	45	44	36	44	62	81	131	224	156	119	28
7	45	47	43	40	47	62	84	133	236	168	117	29
8	44	47	42	40	45	62	85	139	241	164	115	30
9	44	49	42	41	43	62	85	151	254	159	114	30
10	45	47	51	40	47	62	85	164	239	148	102	29
11	43	43	52	40	50	63	88	177	232	144	76	28
12	43	42	47	40	45	63	90	188	225	143	74	28
13	43	40	44	40	43	63	91	201	219	147	75	27
14	43	51	44	42	43	63	88	197	207	138	74	27
15	43	72	43	41	55	63	87	200	191	134	75	27
16	43	78	40	46	60	63	90	206	179	133	74	28
17	43	75	43	50	61	63	97	219	172	131	74	28
18	43	53	44	49	61	63	100	235	170	130	74	25
19	43	46	45	47	61	63	100	249	172	129	71	24
20	43	46	46	46	61	65	98	242	172	126	70	25
21	42	45	46	47	61	65	98	230	175	125	66	26
22	43	45	46	46	61	65	100	219	178	124	61	24
23	44	44	46	45	61	64	102	218	172	120	58	25
24	45	44	45	44	63	64	108	230	166	120	54	30
25	45	44	45	43	63	64	114	228	164	118	48	40
26	44	43	45	44	56	64	124	213	174	118	46	36
27	51	44	44	44	56	65	129	207	209	118	45	34
28	47	44	43	43	65	66	135	228	228	118	36	36
29	44	44	43	41	------	65	131	249	227	117	32	28
30	42	45	44	41	------	64	133	255	275	117	30	22
31	40	------	43	41	------	64	------	260	------	115	29	------
TOTAL	1,400	1,431	1,374	1,319	1,457	1,970	2,859	6,033	6,234	4,455	2,401	869
MEAN	45.2	47.7	44.3	42.5	52.0	63.5	95.3	195	208	144	77.5	29.0
MAX	56	78	52	50	65	66	135	260	275	260	120	40
MIN	40	40	40	36	40	62	64	125	164	115	29	22
AC-FT	2,780	2,840	2,730	2,620	2,890	3,910	5,670	11,970	12,370	8,840	4,760	1,720

CAL YR 1972 TOTAL 23,111 MEAN 63.1 MAX 164 MIN 40 AC-FT 45,840
WTR YR 1973 TOTAL 31,802 MEAN 87.1 MAX 275 MIN 22 AC-FT 63,080

10287900 LEE VINING CREEK NEAR LEE VINING, CALIF.

LOCATION.--Lat 37°55'46", long 119°10'10", in SE¼NW¼SW¼ sec.24, T.1 N., R.25 E., Mono County, on right bank 0.8 mile upstream from Gibbs Canyon, and 3.3 miles southwest of Lee Vining.

DRAINAGE AREA.--34.9 sq mi.

PERIOD OF RECORD.--April 1934 to current year. Prior to October 1959 monthly discharge only, published in WSP 1314 and 1734.

GAGE.--Water-stage recorder and partial concrete control. Altitude of gage is 7,400 ft (from topographic map). See WSP 1734 for history of changes prior to Aug. 6, 1944.

AVERAGE DISCHARGE.--39 years, 66.8 cfs (48,400 acre-ft per year).

EXTREMES.--Current year: Maximum discharge, 337 cfs May 18 (gage height, 3.43 ft); minimum daily, 22 cfs Feb. 21, 22.
Period of record: Maximum discharge, 590 cfs July 4, 1967 (gage height, 4.42 ft); no flow Nov. 29, 1935.

REMARKS.--Flow regulated for power development by Ellery, Saddlebag, Tioga Lakes (combined capacity, 13,269 acre-ft) and by several small natural lakes. No diversion above station.

COOPERATION.--Records furnished by city of Los Angeles, Department of Water and Power and reviewed by Geological Survey.

DISCHARGE, IN CUBIC FEET PER SECOND, WATER YEAR OCTOBER 1972 TO SEPTEMBER 1973

DAY	OCT	NOV	DEC	JAN	FEB	MAR	APR	MAY	JUN	JUL	AUG	SEP
1	26	26	25	27	25	25	66	80	263	163	48	33
2	28	31	25	27	30	35	66	80	252	158	60	32
3	30	51	25	46	35	36	66	80	245	148	70	32
4	45	42	25	35	30	53	66	81	245	108	63	39
5	44	29	24	45	25	44	66	81	269	112	64	46
6	43	53	24	26	27	55	67	61	272	130	57	37
7	43	60	24	39	40	56	62	58	293	117	49	34
8	43	64	31	24	27	46	58	96	295	90	50	32
9	38	60	51	35	24	37	71	123	317	123	55	32
10	26	30	29	25	33	57	63	142	267	108	55	32
11	29	29	27	35	31	46	32	176	269	100	50	32
12	36	29	27	40	26	36	38	185	241	117	39	32
13	36	29	26	29	37	67	47	221	230	96	38	32
14	36	29	26	24	35	38	40	215	196	90	44	32
15	35	29	26	23	30	94	40	229	169	82	44	32
16	35	30	31	31	25	65	40	256	151	82	48	32
17	35	37	49	41	24	74	41	300	108	82	52	31
18	35	37	34	24	24	75	40	312	120	82	43	31
19	35	32	31	23	33	75	39	296	155	80	42	31
20	60	27	27	37	29	75	39	267	155	66	50	31
21	39	27	27	35	22	75	39	235	156	61	39	32
22	34	27	36	56	22	75	40	239	158	59	38	32
23	34	26	28	48	23	75	42	227	156	57	38	32
24	34	27	27	27	30	75	53	239	153	56	38	31
25	47	27	27	25	30	69	80	223	155	65	37	40
26	50	27	27	35	27	68	77	187	160	59	38	32
27	43	27	31	37	24	68	82	182	198	58	38	37
28	25	28	39	24	24	76	101	237	222	57	37	38
29	24	27	26	29	------	70	89	293	169	57	35	32
30	24	27	27	37	------	67	82	291	167	56	34	31
31	24	------	26	25	------	66	------	282	------	51	33	------
TOTAL	1,116	1,024	908	1,014	792	1,873	1,732	5,974	6,206	2,770	1,426	1,002
MEAN	36.0	34.1	29.3	32.7	28.3	60.4	57.7	193	207	89.4	46.0	33.4
MAX	60	64	51	56	40	94	101	312	317	163	70	46
MIN	24	26	24	23	22	25	32	58	108	51	33	31
AC-FT	2,210	2,030	1,800	2,010	1,570	3,720	3,440	11,850	12,310	5,490	2,830	1,990

CAL YR 1972 TOTAL 17,749 MEAN 48.5 MAX 190 MIN 19 AC-FT 35,210
WTR YR 1973 TOTAL 25,837 MEAN 70.8 MAX 317 MIN 22 AC-FT 51,250

11010900 WILSON CREEK TRIBUTARY NEAR DULZURA, CALIF.

LOCATION.--Lat 32°43'22", long 116°42'06", in NE¼SE¼NW¼ sec.5, T.17 S., R.3 E., San Diego County, on right bank on Japatul Lyons Valley Road, 6.6 miles northeast of Dulzura.

DRAINAGE AREA.--0.61 sq mi.

PERIOD OF RECORD.--Water years 1962-67 (annual maximum), October 1967 to September 1973 (discontinued).

GAGE.--Water-stage recorder with rain-gage attachment and culvert control. Altitude of gage is 2,200 ft (from topographic map).

AVERAGE DISCHARGE.--6 years (1967-73), 0.059 cfs (43 acre-ft per year).

EXTREMES.--Current year: Maximum discharge, 91 cfs Mar. 11 (gage height, 11.89 ft); no flow most of year.
Period of record: Maximum discharge, 98 cfs Dec. 6, 1966 (gage height, 12.22 ft, from crest-stage gage), from rating curve extended above 1.6 cfs on basis of computation of flow through culvert at gage heights 8.0, 10.67, and 12.22 ft; no flow all or most of each year.

REMARKS.--Records good. No regulation or diversion above station.

DISCHARGE, IN CUBIC FEET PER SECOND, WATER YEAR OCTOBER 1972 TO SEPTEMBER 1973

DAY	OCT	NOV	DEC	JAN	FEB	MAR	APR	MAY	JUN	JUL	AUG	SEP
1	0	0	0	0	0	0						
2	0	0	0	0	0	0						
3	0	0	0	0	0	0						
4	0	0	3.3	0	0	.26						
5	0	0	0	0	0	.08						
6	0	0	0	0	0	.09						
7	0	0	0	0	0	2.4						
8	0	0	3.1	0	0	2.4						
9	0	0	.33	0	0	.37						
10	0	0	0	0	0	.12						
11	0	4.0	0	0	2.7	3.8						
12	0	.05	0	0	.16	2.3						
13	0	0	0	0	1.7	2.2						
14	0	.32	0	0	0	1.5						
15	0	0	0	0	1.1	.04						
16	0	1.9	0	.06	0	0						
17	0	0	0	0	0	0						
18	.16	0	0	.71	0	0						
19	.12	0	0	.81	0	0						
20	.40	0	0	0	0	2.8						
21	0	0	0	0	0	0						
22	0	0	0	0	0	1.0						
23	0	0	0	0	0	0						
24	0	0	0	0	0	0						
25	0	0	0	0	0	0						
26	0	0	0	0	0	.20						
27	0	0	0	0	0	0						
28	0	0	0	0	1.0	1.1						
29	0	0	0	0	------	.01						
30	0	0	0	0	------	0						
31	0	------	0	0	------	0	------		------			------
TOTAL	.68	6.27	6.73	1.58	6.66	20.67	0	0	0	0	0	0
MEAN	.022	.21	.22	.051	.24	.67	0	0	0	0	0	0
MAX	.40	4.0	3.3	.81	2.7	3.8	0	0	0	0	0	0
MIN	0	0	0	0	0	0	0	0	0	0	0	0
AC-FT	1.3	12	13	3.1	13	41	0	0	0	0	0	0
(a)	2.1	1.9	1.9	1.5	2.5	4.2	0	0	0	0	0	0

CAL YR 1972 TOTAL 13.70 MEAN .037 MAX 4.0 MIN 0 AC-FT 27
WTR YR 1973 TOTAL 42.59 MEAN .12 MAX 4.0 MIN 0 AC-FT 84

a Precipitation, in inches.

11012000 COTTONWOOD CREEK ABOVE TECATE CREEK, NEAR DULZURA, CALIF.

LOCATION.--Lat 32°34'30", long 116°45'11", in NW¼NW¼SW¼ sec.26, T.18 S., R.2 E., San Diego County, on right bank 0.8 mile upstream from confluence with Tecate Creek, and 5.1 miles south of Dulzura.

DRAINAGE AREA.--310 sq mi.

PERIOD OF RECORD.--October 1936 to current year.

GAGE.--Water-stage recorder. Datum of gage is 569.40 ft above mean sea level (levels by International Boundary and Water Commission).

AVERAGE DISCHARGE.--37 years, 6.31 cfs (4,570 acre-ft per year).

EXTREMES.--Current year: Maximum discharge, 80 cfs Mar. 14 (gage height, 3.20 ft); no flow most of year. Period of record: Maximum discharge, 4,340 cfs Feb. 7, 1937 (gage height, 9.65 ft), from rating curve extended above 1,500 cfs; no flow for part of each year.

REMARKS.--Records good. Flow regulated by Morena Reservoir (capacity, 50,210 acre-ft) and Barrett Reservoir (capacity, 44,760 acre-ft). Water released from Barrett Reservoir through Dulzura conduit is diverted to Lower Otay Reservoir.

DISCHARGE, IN CUBIC FEET PER SECOND, WATER YEAR OCTOBER 1972 TO SEPTEMBER 1973

DAY	OCT	NOV	DEC	JAN	FEB	MAR	APR	MAY	JUN	JUL	AUG	SEP
1			0	0	.25	1.8	9.9	.58				
2			0	0	.18	1.4	8.4	.35				
3			0	0	.16	1.2	7.1	.20				
4			0	.02	.17	1.5	6.2	.16				
5			.39	.11	.20	1.7	5.1	.20				
6			0	.05	.47	2.3	4.6	.24				
7			0	.01	.47	10	4.3	.22				
8			2.3	.01	.34	18	3.8	.16				
9			4.0	.03	.33	23	3.3	.15				
10			1.7	.20	.31	14	3.1	.11				
11			1.0	.12	7.4	23	3.0	.08				
12			.59	.08	9.5	60	2.7	.08				
13			.37	.06	18	50	2.7	.11				
14			.25	.03	11	60	2.4	.20				
15			.18	.01	14	32	2.3	.22				
16			.09	.04	12	20	1.9	.13				
17			.07	.89	8.5	14	1.7	.07				
18			.06	.33	6.1	11	1.6	.05				
19			.04	1.9	4.5	8.3	1.3	.03				
20			.04	1.0	3.4	10	1.3	.01				
21			.03	.77	2.8	11	1.1	0				
22			.02	.62	2.5	14	.70	0				
23			.01	.47	2.3	11	.51	0				
24			.01	.34	2.0	8.9	.42	0				
25			0	.31	1.8	8.2	.40	0				
26			0	.37	1.6	8.2	.32	0				
27			0	.28	1.3	10	.29	0				
28			0	.19	3.4	13	.29	0				
29			0	.17	------	14	.33	0				
30			0	.25	------	12	.64	0				
31		------	0	.32	------	11	------	0	------			------
TOTAL	0	0	11.15	8.98	114.98	484.5	81.70	3.35	0	0	0	0
MEAN	0	0	.36	.29	4.11	15.6	2.72	.11	0	0	0	0
MAX	0	0	4.0	1.9	18	60	9.9	.58	0	0	0	0
MIN	0	0	0	0	.16	1.2	.29	0	0	0	0	0
AC-FT	0	0	22	18	228	961	162	6.6	0	0	0	0

CAL YR 1972 TOTAL 11.15 MEAN .03 MAX 4.0 MIN 0 AC-FT 22
WTR YR 1973 TOTAL 704.66 MEAN 1.93 MAX 60 MIN 0 AC-FT 1,400

11012500 CAMPO CREEK NEAR CAMPO, CALIF.

LOCATION.--Lat 32°35'28", long 116°31'29", in SW¼NE¼SE¼ sec.24, T.18 S., R.4 E., San Diego County, on left bank just upstream from bridge on State Highway 94, 3.5 miles southwest of Campo.

DRAINAGE AREA.--85.0 sq mi, of which 3 sq mi are in Mexico.

PERIOD OF RECORD.--October 1936 to current year.

GAGE.--Water-stage recorder and broad-crested weir. Datum of gage is 2,178.92 ft above mean sea level. Prior to Dec. 1, 1954, at datum 1 ft higher.

AVERAGE DISCHARGE.--37 years, 1.71 cfs (1,240 acre-ft per year).

EXTREMES.--Current year: Maximum discharge, 2.0 cfs Nov. 11 (gage height, 1.45 ft); no flow for part of year. Period of record: Maximum discharge, 880 cfs Feb. 6, 1937 (gage height, 4.80 ft, present datum), from rating curve extended above 110 cfs on basis of velocity mean-depth relation and cross-sectional area at control; no flow for part of most years.

REMARKS.--Records good except those for period of no gage-height record, which are poor. Flow partly regulated by small conservation reservoir since August 1956. No diversion above station.

DISCHARGE, IN CUBIC FEET PER SECOND, WATER YEAR OCTOBER 1972 TO SEPTEMBER 1973

DAY	OCT	NOV	DEC	JAN	FEB	MAR	APR	MAY	JUN	JUL	AUG	SEP
1	0	0	.01	.02	.04	.07	.09	.09	.08	.17	.04	
2	0	0	.02	.02	.03	.07	.09	.08	.08	.16	.04	
3	0	0	.02	.02	.03	.07	.09	.07	.08	.12	.03	
4	0	0	.14	.03	.05	.09	.08	.07	.08	.12	.02	
5	0	0	.02	.03	.05	.09	.08	.09	.08	.14	.02	
6	0	0	.02	.03	.07	.11	.08	.08	.09	.16	.02	
7	0	0	.03	.03	.05	.12	.08	.08	.09	.17	.02	
8	0	0	.05	.03	.05	.15	.08	.07	.09	.16	.02	
9	0	0	.02	.04	.05	.11	.08	.07	.09	.15	.02	
10	0	0	.01	.05	.05	.10	.08	.05	.09	.15	.01	
11	0	.08	.01	.03	.21	.16	.08	.05	.09	.11	.01	
12	0	.02	.01	.03	.13	.22	.08	.06	.09	.02	.01	
13	0	.01	.01	.03	.14	.21	.07	.08	.09	.02	.01	
14	0	.02	.01	.03	.08	.17	.07	.09	.09	.02	.01	
15	0	.01	.01	.03	.07	.14	.07	.07	.09	.02	.01	
16	0	.10	.01	.05	.07	.12	.07	.07	.09	.03	.01	
17	0	.02	.01	.06	.07	.12	.07	.06	.09	.03	.01	
18	.01	.01	.01	.07	.06	.14	.07	.06	.09	.03	0	
19	0	.01	.01	.07	.05	.12	.07	.08	.09	.03	0	
20	0	0	.01	.05	.05	.11	.07	.08	.13	.04	0	
21	0	0	.01	.05	.07	.10	.07	.08	.13	.04	0	
22	0	0	.01	.05	.07	.10	.06	.08	.10	.04	0	
23	0	0	.01	.04	.07	.10	.07	.08	.10	.03	0	
24	0	0	.01	.04	.07	.10	.07	.08	.12	.03	0	
25	0	0	.02	.05	.07	.10	.07	.08	.14	.02	0	
26	0	0	.01	.05	.07	.10	.07	.08	.17	.02	0	
27	0	0	.01	.04	.07	.10	.08	.08	.17	.02	0	
28	0	.01	.01	.03	.09	.10	.09	.08	.19	.03	0	
29	0	.01	.01	.03	------	.09	.09	.08	.21	.03	0	
30	0	.01	.01	.04	------	.09	.09	.08	.22	.04	0	
31	0	------	.02	.05	------	.09	------	.08	------	.04	0	------
TOTAL	.01	.31	.57	1.22	1.98	3.56	2.31	2.33	3.34	2.19	.31	0
MEAN	.0003	.010	.018	.039	.071	.11	.077	.075	.11	.071	.010	0
MAX	.01	.10	.14	.07	.21	.22	.09	.09	.22	.17	.04	0
MIN	0	0	.01	.02	.03	.07	.06	.05	.08	.02	0	0
AC-FT	.02	.6	1.1	2.4	3.9	7.1	4.6	4.6	6.6	4.3	.6	0

CAL YR 1972 TOTAL 6.61 MEAN .018 MAX .14 MIN 0 AC-FT 13
WTR YR 1973 TOTAL 18.13 MEAN .050 MAX .22 MIN 0 AC-FT 36

PEAK DISCHARGE (BASE, 20 CFS).--No peak above base.

NOTE.--No gage-height record Dec. 10 to Jan. 8, Mar. 20 to Apr. 20, May 19 to June 19.

11013000 TIJUANA RIVER NEAR DULZURA, CALIF.

LOCATION.--Lat 32°33'56", long 116°46'27", in E½ sec.33, T.18 S., R.2 E., San Diego County, on left bank 0.5 mile downstream from confluence of Cottonwood and Tecate Creeks, and 5.5 miles south of Dulzura.

DRAINAGE AREA.--481 sq mi, of which 70 sq mi are in Mexico.

PERIOD OF RECORD.--October 1936 to current year.

GAGE.--Water-stage recorder. Datum of gage is 542.42 ft above mean sea level (levels by International Boundary and Water Commission). Prior to Sept. 19, 1939, at datum 2.00 ft higher.

AVERAGE DISCHARGE.--37 years, 10.1 cfs (7,320 acre-ft per year).

EXTREMES.--Current year: Maximum discharge, 277 cfs Mar. 14 (gage height, 4.03 ft); no flow Oct. 6.
Period of record: Maximum discharge, 4,700 cfs Feb. 7, 1937 (gage height, 8.50 ft, present datum), from rating curve extended above 300 cfs on basis of velocity, mean-depth, and area studies; no flow for part of most years.

REMARKS.--Records good. Flow regulated by Morena Reservoir (capacity, 50,210 acre-ft) and Barrett Reservoir (capacity, 44,760 acre-ft). Water diverted from Cottonwood Creek at Barrett Dam by Dulzura conduit to Jamul Creek.

DISCHARGE, IN CUBIC FEET PER SECOND, WATER YEAR OCTOBER 1972 TO SEPTEMBER 1973

DAY	OCT	NOV	DEC	JAN	FEB	MAR	APR	MAY	JUN	JUL	AUG	SEP
1	.02	.06	.10	.22	.94	4.0	19	2.4	1.1	.41	.10	.07
2	.02	.07	.10	.24	.85	3.2	16	1.8	1.1	.50	.09	.05
3	.02	.07	.12	.26	.77	2.9	14	1.5	1.1	.45	.10	.05
4	.02	.07	.39	.50	.85	3.2	12	1.4	1.1	.25	.10	.06
5	.01	.08	6.9	1.1	.85	3.5	9.3	1.7	1.0	.21	.09	.04
6	0	.07	.44	.90	1.1	4.1	8.3	1.7	.99	.15	.09	.04
7	.01	.08	.34	.80	1.3	22	7.8	1.4	.93	.12	.10	.04
8	.01	.08	3.3	.75	1.1	31	6.0	1.3	.82	.12	.11	.04
9	.02	.08	19	.66	.99	62	5.2	1.3	.65	.12	.11	.04
10	.03	.08	3.0	1.3	.98	31	5.1	1.4	.71	.15	.12	.05
11	.03	.10	1.8	1.3	17	44	4.8	1.4	.69	.15	.14	.04
12	.03	.10	1.2	1.0	24	164	4.8	1.4	.69	.14	.10	.05
13	.03	.09	.81	.99	42	100	4.7	1.5	.52	.13	.11	.07
14	.03	.11	.68	.92	20	195	4.4	1.6	.56	.10	.13	.09
15	.03	.10	.66	.84	24	66	4.0	1.5	.58	.11	.13	.09
16	.03	.13	.50	.94	24	38	3.7	1.3	.60	.12	.13	.13
17	.04	4.9	.57	4.8	14	26	3.4	1.3	.62	.10	.11	.19
18	.10	.15	.53	2.0	10	19	3.5	1.3	.57	.11	.09	.24
19	.08	.12	.46	9.9	7.8	14	3.5	1.3	.53	.11	.10	.24
20	.09	.12	.45	3.8	6.0	20	3.5	1.3	.53	.10	.08	.27
21	.08	.10	.46	2.5	5.0	24	2.9	1.3	.50	.10	.10	.29
22	.08	.10	.51	2.1	4.3	32	2.9	1.3	.56	.10	.07	.33
23	.08	.10	.53	1.6	3.8	24	2.6	1.4	.39	.11	.07	.38
24	.08	.10	.53	1.4	3.4	19	2.2	1.4	.21	.10	.05	.37
25	.08	.10	.35	1.1	3.1	16	2.2	1.4	.15	.09	.06	.39
26	.08	.10	.15	1.4	2.6	15	2.0	1.4	.15	.10	.06	.33
27	.08	.10	.11	1.4	2.4	20	2.0	1.3	.15	.09	.06	.18
28	.08	.10	.14	1.0	5.7	26	2.1	1.2	.21	.10	.07	.12
29	.08	.10	.18	.85	------	32	2.2	1.1	.21	.11	.06	.09
30	.09	.10	.20	.85	------	24	2.6	1.0	.29	.09	.06	.09
31	.08	------	.20	.94	------	21	------	1.1	------	.09	.06	------
TOTAL	1.54	7.66	44.71	48.36	228.83	1,105.9	166.7	43.7	18.21	4.73	2.85	4.46
MEAN	.050	.26	1.44	1.56	8.17	35.7	5.56	1.41	.61	.15	.092	.15
MAX	.10	4.9	19	9.9	42	195	19	2.4	1.1	.50	.14	.39
MIN	0	.06	.10	.22	.77	2.9	2.0	1.0	.15	.09	.05	.04
AC-FT	3.1	15	89	96	454	2,190	331	87	36	9.4	5.7	8.8

CAL YR 1972 TOTAL 96.77 MEAN .26 MAX 19 MIN 0 AC-FT 192
WTR YR 1973 TOTAL 1,677.65 MEAN 4.60 MAX 195 MIN 0 AC-FT 3,330

11013200 RODRIGUEZ RESERVOIR AT RODRIGUEZ DAM, BAJA CALIFORNIA, MEXICO

LOCATION.--Lat 32°26'40", long 116°54'25", Baja California, Mexico, at Rodriguez Dam on Rio de las Palmas, 0.2 mile upstream from Arroyo Matanuco, and 10 miles southeast of Tijuana.

DRAINAGE AREA.--977 sq mi, of which 10 sq mi are in the United States.

PERIOD OF RECORD.--April 1937 to current year. Published with record for Tijuana River near Nestor, Calif., October 1953 to September 1957. Monthend contents for April 1937 to September 1950 published in WSP 1315-B and for October 1950 to September 1960 in WSP 1735.

GAGE.--Nonrecording gage read once a day. Datum of gage is at mean sea level (levels by National Irrigation Commission, Mexico).

EXTREMES.--Current year: Maximum contents, 3,030 acre-ft Apr. 12 to May 1; minimum, 357 acre-ft Oct. 1.
Period of record: Reservoir spilled during March 1938, September 1940, February to May 1941, March 1942, and February, March 1944; reservoir dry Apr. 2, 1964, to Apr. 9, 1965, Aug. 21 to Nov. 22, 1965.

REMARKS.--Reservoir is formed by thin-shell concrete arch dam completed in 1936; storage began in 1937. Capacity table is based on surveys made in 1927. Maximum storage at crest of spillway gates (elevation, 410.10 ft), 111,070 acre-ft; at spillway lip (elevation, 380.08 ft), 74,580 acre-ft; dead storage below outlet (elevation, 267.39 ft), 1,650 acre-ft included in contents. Reservoir stores water for irrigation of 3,000 acres on both banks 0.5 to 5.5 miles downstream and municipal supply for city of Tijuana. Since August 1972 Colorado River water diverted through Otay aqueduct into the reservoir for Tijuana emergency use; this year 881 acre-ft was imported.

COOPERATION.--Records furnished by Ministry of Hydraulic Resources, Government of Mexico, through International Boundary and Water Commission, United States section.

MONTHEND CONTENTS, WATER YEAR OCTOBER 1972 TO SEPTEMBER 1973

Date	Contents (acre-feet)	Change in contents (acre-feet)
Sept. 30	357	-
Oct. 31	447	+90
Nov. 30	538	+91
Dec. 31	558	+20
CAL YR 1972	-	+260
Jan. 31	676	+118
Feb. 28	790	+114
Mar. 31	2,960	+2,170
Apr. 30	3,030	+70
May 31	2,930	-100
June 30	2,820	-110
July 31	2,910	+90
Aug. 31	2,940	+30
Sept. 30	2,900	-40
WTR YR 1973	--	+2,543

11013500 TIJUANA RIVER NEAR NESTOR, CALIF.

LOCATION.--Lat 32°33'06", long 117°05'00", on line between secs. 3 and 4, T.19 S., R.2 W., San Diego County, on downstream side of county highway bridge, 1.7 miles south of Nestor, and 2.9 miles upstream from mouth.

DRAINAGE AREA.--1,695 sq mi (revised), of which 1,236 sq mi are in Mexico.

PERIOD OF RECORD.--October 1914 to September 1915, October 1936 to current year.

GAGE.--Water-stage recorder. Datum of gage is 15.14 ft above mean sea level. See WSP1735 for history of changes prior to Aug. 5, 1958.

AVERAGE DISCHARGE.--38 years, 29.6 cfs (21,450 acre-ft per year).

EXTREMES.--Current year: Maximum discharge, 34 cfs Feb. 13 (gage height, 3.26 ft); no flow most of year.
Period of record (1936 to current year): Maximum discharge, 17,700 cfs Feb. 7, 1937 (gage height, 8.20 ft, datum then in use), from rating curve extended above 2,000 cfs on basis of velocity-depth relation and cross section after peak; no flow parts of each year.

REMARKS.--Records good. Flow regulated by Morena Reservoir (capacity, 50,210 acre-ft) and Barrett Reservoir (capacity, 44,760 acre-ft) in the United States, and Rodriguez Reservoir (see sta 11013200) in Mexico. Water diverted from Cottonwood Creek at Barrett Dam by Dulzura conduit to Jamul Creek. AVERAGE DISCHARGE represents flow to the ocean regardless of upstream development. Records of suspended-sediment discharge for the current year are published in Part 2 of this report.

DISCHARGE, IN CUBIC FEET PER SECOND, WATER YEAR OCTOBER 1972 TO SEPTEMBER 1973

DAY	OCT	NOV	DEC	JAN	FEB	MAR	APR	MAY	JUN	JUL	AUG	SEP
1			0	0	0	0						
2			0	0	0	0						
3			0	0	0	0						
4			.43	0	0	0						
5			2.2	0	0	0						
6			0	0	0	0						
7			0	0	0	0						
8			1.2	0	0	.05						
9			3.4	0	0	1.0						
10			0	0	0	0						
11			0	0	4.4	1.2						
12			0	0	1.5	6.4						
13			0	0	11	.11						
14			0	0	.59	0						
15			0	0	0	0						
16			0	0	0	0						
17			0	0	0	0						
18			0	0	0	0						
19			0	4.0	0	0						
20			0	.01	0	1.8						
21			0	0	0	1.4						
22			0	0	0	0						
23			0	0	0	0						
24			0	0	.01	0						
25			0	0	0	0						
26			0	0	0	0						
27			0	0	0	0						
28			0	0	0	0						
29			0	0	------	0						
30			0	0	------	0						
31		------	0	0	------	0	------		------			------
TOTAL	0	0	7.23	4.01	17.50	11.96	0	0	0	0	0	0
MEAN	0	0	.23	.13	.63	.39	0	0	0	0	0	0
MAX	0	0	3.4	4.0	11	6.4	0	0	0	0	0	0
MIN	0	0	0	0	0	0	0	0	0	0	0	0
AC-FT	0	0	14	8.0	35	24	0	0	0	0	0	0

CAL YR 1972 TOTAL 7.23 MEAN .020 MAX 3.4 MIN 0 AC-FT 14
WTR YR 1973 TOTAL 40.70 MEAN .11 MAX 11 MIN 0 AC-FT 81

11014000 JAMUL CREEK NEAR JAMUL, CALIF.

LOCATION.--Lat 32°38'15", long 116°53'00", in NE¼ sec.4, T.18 S., R.1 E., San Diego County, on right bank 300 ft upstream from county road crossing at upper end of Lower Otay Reservoir, 1.4 miles downstream from Dulzura Creek, and 5.5 miles south of Jamul.

DRAINAGE AREA.--70.2 sq mi (revised).

PERIOD OF RECORD.--April 1940 to current year.

GAGE.--Water-stage recorder and broad-crested weir control with low-water Parshall flume. Datum of gage is 511.64 ft above mean sea level. Prior to Oct. 1, 1951, at datum 1.00 ft higher.

EXTREMES.--Current year: Maximum discharge, 1,250 cfs Nov. 11 (gage height, 4.31 ft); no flow Oct. 1 to Nov. 10, Sept. 1-30.
Period of record: Maximum discharge, 4,000 cfs Dec. 1, 1947 (gage height, 6.42 ft, present datum), from rating curve extended above 1,200 cfs; no flow at times in some years.

REMARKS.--Records good. No regulation above station. Water diverted from Cottonwood Creek by Dulzura conduit discharges into Jamul Creek via Dulzura Creek and is included in discharge for this station (see sta 11012000).

DISCHARGE, IN CUBIC FEET PER SECOND, WATER YEAR OCTOBER 1972 TO SEPTEMBER 1973

DAY	OCT	NOV	DEC	JAN	FEB	MAR	APR	MAY	JUN	JUL	AUG	SEP
1		0	.30	.24	.16	16	41	26	22	23	7.3	
2		0	.30	.17	.16	16	40	25	23	22	6.0	
3		0	.30	.16	.12	16	39	25	22	22	4.8	
4		0	35	3.6	.12	17	38	25	22	21	4.1	
5		0	1.0	.32	.12	17	37	25	21	21	3.4	
6		0	.30	.24	.04	17	37	25	21	21	2.8	
7		0	.47	.24	.04	41	36	24	20	21	2.3	
8		0	24	.24	.04	55	34	24	20	20	1.9	
9		0	4.6	.24	.04	54	32	23	20	19	1.6	
10		0	.78	2.2	.04	36	32	9.4	20	19	1.2	
11		130	.58	.41	61	80	32	26	19	18	.92	
12		1.0	.46	.41	3.7	82	32	28	19	18	.72	
13		.41	.41	.41	16	69	31	29	19	17	.50	
14		.30	.32	.41	2.3	77	31	29	18	17	.25	
15		.30	.32	.41	4.0	56	31	28	19	17	.10	
16		50	.32	.61	1.6	47	29	28	23	21	.02	
17		1.5	.32	9.7	1.2	41	30	28	23	19	.02	
18		1.0	.32	2.3	1.2	37	30	27	23	19	.02	
19		.41	.32	25	1.1	34	29	27	22	18	.02	
20		.30	.32	1.0	.85	122	29	26	21	17	.02	
21		.30	.32	.70	.82	55	27	24	21	16	.02	
22		.30	.32	.60	14	67	27	9.0	21	19	.02	
23		.30	.32	.50	16	65	26	5.0	20	18	.02	
24		.30	.32	.40	16	52	26	3.5	20	15	.01	
25		.30	.32	.40	16	45	26	3.0	20	15	.01	
26		.30	.32	.60	15	44	26	19	20	13	.01	
27		.30	.32	.40	16	48	26	21	20	8.0	.01	
28		.30	.32	.30	25	50	26	21	21	6.2	.01	
29		.30	.28	.20	------	49	26	21	25	7.7	.01	
30		.30	.24	.20	------	44	27	21	24	9.7	.01	
31		------	.24	.20	------	42	------	22	------	10	.01	------
TOTAL	0	188.22	74.06	52.81	212.65	1,491	933	676.9	629	527.6	38.13	0
MEAN	0	6.27	2.39	1.70	7.59	48.1	31.1	21.8	21.0	17.0	1.23	0
MAX	0	130	35	25	61	122	41	29	25	23	7.3	0
MIN	0	0	.24	.16	.04	16	26	3.0	18	6.2	.01	0
AC-FT	0	373	147	105	422	2,960	1,850	1,340	1,250	1,050	76	0

CAL YR 1972 TOTAL 436.55 MEAN 1.19 MAX 130 MIN 0 AC-FT 866
WTR YR 1973 TOTAL 4,823.37 MEAN 13.2 MAX 130 MIN 0 AC-FT 9,570

11014550 LOWER OTAY RESERVOIR NEAR CHULA VISTA, CALIF.

LOCATION.--Lat 32°36'35", long 116°55'35", in NW¼NW¼ sec.18, T.18 S., R.1 E., San Diego County, on upstream face 200 ft from right end of Savage Dam on Otay River, and 9 miles east of Chula Vista.

DRAINAGE AREA.--99.0 sq mi.

PERIOD OF RECORD.--October 1945 to September 1959 published with Otay River at Savage Dam (sta 11014500). October 1972 to September 1973. Records of monthend gage heights October 1936 to September 1945, in files of San Diego County Department of Sanitation and Flood Control.

GAGE.--Water-stage recorder. Datum of gage is 397.20 ft above mean sea level; gage readings have been reduced to elevations above mean sea level. Prior to Oct. 1, 1972, nonrecording gage at different site at datum 50.0 ft lower.

EXTREMES.--Current year: Maximum contents observed, 12,380 acre-ft July 31 (elevation, 435.28 ft); minimum, 5,760 acre-ft Feb. 10 (elevation, 417.81 ft).
Period of record (1945-59, 1972-73): Maximum contents, 48,197 acre-ft Oct. 31, 1945 (elevation, 493.87 ft); minimum, 3,155 acre-ft Dec. 31, 1951 (elevation, 407.56 ft).

REMARKS.--Reservoir is formed by gravity section cyclopean concrete and masonary dam, built in 1919. Capacity from Geological Survey table dated Apr. 3, 1956. Maximum capacity at top of spillway gates (elevation, 490.70 ft), 56,520 acre-ft. Capacity at permanent spillway level (elevation, 484.70 ft), 49,510 acre-ft. Dead storage below lowest outlet (elevation, 395.05 ft), 1,150 acre-ft. Dulzura conduit carries water from Barrett Reservoir on Cottonwood Creek to Dulzura Creek, where water is carried to the reservoir by Jamul Creek (11014000). Reservoir storage includes supplemental Colorado River water. Small diversions for local use near reservoir. Water used for municipal supply by city of San Diego.

COOPERATION.--Gage heights furnished by San Diego County Department of Sanitation and Flood Control.

MONTHEND ELEVATION AND CONTENTS, WATER YEAR OCTOBER 1972 TO SEPTEMBER 1973

Date	Elevation (feet)a	Contents (acre-feet)	Change in contents (acre-feet)
Sept. 30.....	421.79	7,040	--
Oct. 31.....	420.35	6,570	-470
Nov. 30.....	420.87	6,740	+170
Dec. 31.....	419.20	6,200	-540
CAL YR 1972....	--	--	--
Jan. 31.....	418.10	5,850	-350
Feb. 28.....	418.42	5,950	+100
Mar. 31.....	427.41	9,070	+3,120
Apr. 30.....	430.58	10,330	+1,260
May 31.....	432.52	11,150	+820
June 30.....	434.06	11,830	+680
July 31.....	435.28	12,380	+550
Aug. 31.....	434.42	11,990	-390
Sept. 30.....	433.60	11,620	-370
WTR YR 1973....	--	--	+4,580

a Elevation at 0800.

11015000 SWEETWATER RIVER NEAR DESCANSO, CALIF.

LOCATION.--Lat 32°50'05", long 116°37'20", in NW¼SE¼ sec.25, T.15 S., R.3 E., San Diego County, on right bank at county road bridge, 0.7 mile downstream from unnamed tributary, and 1.3 miles south of Descanso.

DRAINAGE AREA.--45.4 sq mi (revised).

PERIOD OF RECORD.--October 1905 to September 1927, October 1956 to current year. Monthly discharge only for October to December 1905, January to February 1916, February, March, June to September 1927, published in WSP 1315-B. Combined records of river and diversion, October 1956 to current year.

GAGE.--Water-stage recorder on river; water-stage recorder on concrete diversion. Datum of gage is 3,269.24 ft above mean sea level. Prior to June 25, 1927, nonrecording gages at several sites within 0.1 mile upstream at various datums.

AVERAGE DISCHARGE (Creek only).--39 years, 10.5 cfs (7,610 acre-ft per year).
(Combined).--17 years, 4.02 cfs (2,640 acre-ft per year).

EXTREMES (Creek only).--Current year: Maximum discharge, 266 cfs Mar. 13 (gage height, 5.17 ft), from rating extended above 80 cfs; no flow many days.
Period of record: Maximum discharge, 11,200 cfs Feb. 16, 1927 (gage height, 13.2 ft, from floodmarks, site and datum then in use), on basis of slope-area measurement of maximum flow; no flow many days in most years.
(Combined).--Current year: Maximum discharge, 266 cfs Mar. 13; no flow many days.
Period of record: Maximum discharge, 3,890 cfs Dec. 6, 1966; no flow many days in each year.

REMARKS.--Records good. No regulation above station. Sweetwater River diversion diverts 0.3 mile above station for irrigation below. For records of combined discharge of river and diversion, see following page.

DISCHARGE, IN CUBIC FEET PER SECOND, WATER YEAR OCTOBER 1972 TO SEPTEMBER 1973

DAY	OCT	NOV	DEC	JAN	FEB	MAR	APR	MAY	JUN	JUL	AUG	SEP
1	0	0	.22	.37	.58	5.1	64	9.2	2.8	.08	.14	
2	0	0	.37	.37	.58	3.6	56	8.8	3.0	.05	.16	
3	0	0	.52	.58	.58	2.8	50	8.5	2.8	.02	.19	
4	0	0	4.8	1.0	.55	4.0	46	8.0	2.2	0	.14	
5	0	0	1.7	.79	.52	7.4	40	9.0	1.8	0	.14	
6	0	0	.87	.58	.95	9.9	37	8.7	1.5	0	.11	
7	0	0	1.1	.52	.65	57	34	8.5	1.3	0	.09	
8	0	0	7.9	.52	.65	66	29	8.3	1.2	0	.08	
9	0	0	2.6	.52	.58	59	28	8.0	1.1	0	.08	
10	0	0	1.5	.79	.58	38	27	7.7	1.1	.20	.06	
11	0	1.2	1.3	.52	21	95	25	7.5	1.1	.22	.04	
12	0	.47	1.0	.52	37	120	23	7.3	1.1	.22	.03	
13	0	.33	.95	.47	54	148	21	7.0	1.2	.22	.02	
14	0	.42	.79	.37	27	175	22	6.8	1.3	.22	.01	
15	0	.33	.65	.47	18	93	21	6.2	1.5	.19	.01	
16	0	3.7	.65	.96	12	72	20	5.9	1.9	.22	.01	
17	0	1.3	.65	2.2	9.5	64	19	6.2	1.9	.22	.01	
18	.01	1.0	.65	.65	8.0	59	19	5.9	1.9	.22	0	
19	0	.95	.58	4.2	6.5	51	18	5.4	1.3	.22	0	
20	.01	.79	.52	1.3	5.4	90	18	5.1	1.0	.22	0	
21	0	.72	.52	1.0	5.6	85	16	4.4	.95	.22	0	
22	0	.65	.52	.95	5.6	163	15	2.8	.87	.19	0	
23	0	.65	.52	.79	4.6	105	14	3.2	.79	.16	0	
24	0	.58	.52	.79	4.0	90	13	3.6	.72	.16	0	
25	0	.58	.47	.79	3.6	81	12	3.6	.47	.14	0	
26	0	.58	.37	.87	3.4	87	11	3.6	.16	.11	0	
27	0	.58	.52	.65	3.4	107	9.5	3.2	.25	.09	0	
28	0	.52	.58	.65	6.2	111	9.0	2.5	.29	.09	0	
29	0	.29	.47	.65	------	102	9.0	2.3	.11	.09	0	
30	0	.22	.47	.79	------	82	10	2.3	.09	.09	0	
31	0	------	.47	.65	------	69	------	2.3	------	.09	0	------
TOTAL	.02	15.86	34.75	26.28	241.02	2,301.8	735.5	181.8	37.70	3.95	1.32	0
MEAN	.0006	.53	1.12	.85	8.61	74.3	24.5	5.86	1.26	.13	.043	0
MAX	.01	3.7	7.9	4.2	54	175	64	9.2	3.0	.22	.19	0
MIN	0	0	.22	.37	.52	2.8	9.0	2.3	.09	0	0	0
AC-FT	.04	31	69	52	478	4,570	1,460	361	75	7.8	2.6	0

CAL YR 1972 TOTAL 105.92 MEAN .29 MAX 7.9 MIN 0 AC-FT 210
WTR YR 1973 TOTAL 3,580.00 MEAN 9.81 MAX 175 MIN 0 AC-FT 7,100

PEAK DISCHARGE (BASE, 100 CFS)

DATE	TIME	G.H.	DISCHARGE	DATE	TIME	G.H.	DISCHARGE
3-8	2000	4.65	135	3-20	1000	4.62	128
3-11	1900	4.93	203	3-22	1130	4.93	203
3-13	2330	5.17	266	3-28	2030	4.72	150

11015000 SWEETWATER RIVER NEAR DESCANSO, CALIF.--Continued

COMBINED DISCHARGE, IN CUBIC FEET PER SECOND, OF SWEETWATER RIVER AND SWEETWATER DIVERSION NEAR DESCANSO, CALIF., WATER YEAR OCTOBER 1972 TO SEPTEMBER 1973

DAY	OCT	NOV	DEC	JAN	FEB	MAR	APR	MAY	JUN	JUL	AUG	SEP
1	0	.02	.50	.38	.59	5.1	64	9.2	3.1	.44	.16	.03
2	0	.02	.54	.38	.59	3.6	56	8.8	3.0	.39	.18	.03
3	0	.02	.54	.59	.59	2.8	50	8.5	2.8	.32	.21	.03
4	0	.02	4.8	1.0	.56	4.0	46	8.0	2.2	.16	.15	.03
5	0	.02	1.7	.80	.53	7.4	40	9.0	1.8	.15	.15	.03
6	0	.02	.88	.59	.96	9.9	37	8.7	1.5	.18	.12	.03
7	0	.02	1.1	.53	.66	57	34	8.5	1.3	.20	.10	.03
8	0	.02	7.9	.53	.66	66	29	8.3	1.2	.20	.09	.03
9	0	.02	2.6	.53	.59	59	28	8.0	1.1	.17	.09	.03
10	0	.02	1.5	.80	.59	38	27	7.7	1.1	.22	.07	.03
11	0	1.2	1.3	.52	21	95	25	7.5	1.1	.24	.05	.03
12	0	.48	1.0	.52	37	120	23	7.3	1.1	.24	.04	.03
13	0	.34	.96	.47	54	148	21	7.0	1.2	.24	.02	.03
14	0	.43	.80	.37	27	175	22	6.8	1.3	.24	.01	.03
15	0	.34	.66	.47	18	93	21	6.2	1.5	.21	.01	.03
16	0	3.7	.66	.97	12	72	20	5.9	1.9	.24	.01	.03
17	0	1.3	.66	2.2	9.5	64	19	6.2	1.9	.24	.02	.04
18	.03	1.0	.66	.66	8.0	59	19	5.9	1.9	.24	0	.04
19	.03	.97	.58	4.2	6.5	51	18	5.4	1.3	.24	0	.03
20	.07	.81	.52	1.3	5.4	90	18	5.1	1.0	.24	.02	.04
21	.04	.74	.52	1.0	5.6	85	16	4.8	.96	.24	.03	.04
22	.03	.66	.52	.96	5.6	163	15	4.3	.89	.21	.03	.04
23	.03	.66	.52	.80	4.6	105	14	4.2	.81	.18	.03	.06
24	.02	.59	.52	.80	4.0	90	13	4.3	.74	.17	.03	.06
25	.02	.58	.48	.80	3.6	81	12	4.3	.80	.15	.03	.04
26	.02	.59	.38	.88	3.4	87	11	4.3	.59	.12	.03	.01
27	.02	.59	.54	.66	3.4	107	9.5	3.9	.53	.10	.03	.02
28	.02	.63	.60	.66	6.2	111	9.0	3.2	.55	.10	.03	.04
29	.02	.63	.48	.66	------	102	9.0	3.0	.47	.10	.03	.04
30	.02	.52	.48	.80	------	82	10	3.0	.45	.10	.03	.04
31	.02	------	.48	.66	------	69	------	3.0	------	.11	.03	------
TOTAL	.39	16.96	35.38	26.49	241.12	2,301.8	735.5	190.3	40.09	6.38	1.83	1.02
MEAN	.013	.57	1.14	.85	8.61	74.3	24.5	6.14	1.34	.21	.059	.034
MAX	.07	3.7	7.9	4.2	54	175	64	9.2	3.1	.44	.21	.06
MIN	0	.02	.38	.37	.53	2.8	9.0	3.0	.45	.10	0	.01
AC-FT	.8	34	70	53	478	4,570	1,460	377	80	13	3.6	2.0

CAL YR 1972 TOTAL 119.73 MEAN .33 MAX 7.9 MIN 0 AC-FT 237
WTR YR 1973 TOTAL 3,597.26 MEAN 9.86 MAX 175 MIN 0 AC-FT 7,140

PEAK DISCHARGE (BASE, 100 CFS)

DATE	TIME	DISCHARGE	DATE	TIME	DISCHARGE
3-8	2000	135	3-20	1000	128
3-11	1900	203	3-22	1130	203
3-13	2330	266	3-28	2030	150

11016550 SWEETWATER RESERVOIR NEAR NATIONAL CITY, CALIF.

LOCATION.--Lat 32°41'20", long 117°00'35", San Diego County, in La Nacion Grant, at Sweetwater Dam, 6 miles east of National City, and 8 miles upstream from mouth.

DRAINAGE AREA.--182 sq mi.

PERIOD OF RECORD.--October 1943 to September 1966 published with Sweetwater River at Sweetwater Dam, Calif. (sta 110165(October 1972 to September 1973. Records of monthend gage heights October 1891 to September 1943, in files of San Diego County Department of Sanitation and Flood Control.

GAGE.--Water-stage recorder. Datum of gage is 149.28 ft above mean sea level (levels by San Diego County); gage readings have been reduced to elevations above mean sea level. Prior to Oct. 1, 1972, nonrecording gage at same site at datum 0.16 ft lower.

EXTREMES.--Current year: Maximum contents observed, 5,740 acre-ft May 16, 17 (elevation, 203.15 ft); minimum, 2,010 acre-ft Dec. 31 (elevation, 189.80 ft).
Period of record (1943-1966, 1972-73): Maximum contents, 20,900 acre-ft Oct. 31, 1943 (elevation, 231.24 ft); minimum, 1,740 acre-ft Nov. 1, 1949 (elevation, 188.48 ft).

REMARKS.--Reservoir is formed by concrete gravity dam. Dam completed Apr. 7, 1888, to elevation 223.82 ft, raised to elevation 228.82 ft in 1895, and raised to elevation 243.82 ft in 1911. In 1939 the spillway was completed at its present elevation. Capacity table dated December 1947. Capacity of reservoir at spillway level (elevation, 238.82 ft), 27,690 acre-ft. Dead storage below lowest outlet (elevation, 168.82 ft), 4.0 acre-ft. Diversions for irrigation. Regulation at Loveland Reservoir. Water is released by California-American Water Co. as required for irrigation and domestic use in Chula Vista, National City, and contiguous areas.

COOPERATION.--Gage heights furnished by San Diego County Department of Sanitation and Flood Control.

MONTHEND ELEVATION AND CONTENTS, WATER YEAR OCTOBER 1972 TO SEPTEMBER 1973

Date	Elevation (feet)a	Contents (acre-feet)	Change in contents (acre-feet)
Sept. 30.....	196.83	3,740	--
Oct. 31.....	195.12	3,290	-450
Nov. 30.....	193.20	2,800	-490
Dec. 31.....	189.80	2,010	-790
CAL YR 1972....	--	--	--
Jan. 31.....	189.91	2,040	+30
Feb. 28.....	191.68	2,440	+400
Mar. 31.....	193.60	2,900	+460
Apr. 30.....	199.43	4,510	+1,610
May 31.....	202.72	5,590	+1,080
June 30.....	200.07	4,710	-880
July 31.....	197.80	4,020	-690
Aug. 31.....	195.29	3,330	-690
Sept. 30.....	193.41	2,850	-480
WTR YR 1973....	--	--	-890

a Elevation at 0800.

11020600 EL CAPITAN RESERVOIR NEAR LAKESIDE, CALIF.

LOCATION.--Lat 32°53'00", long 116°48'25", in NE¼SE¼NE¼ sec.7, T.15 S., R.2 E., San Diego County, on outlet tower of El Capitan Dam on San Diego River, 7 miles east of Lakeside.

DRAINAGE AREA.--188 sq mi.

PERIOD OF RECORD.--October 1945 to September 1966 published with San Diego River at El Capitan Dam (sta 11020500). October 1972 to September 1973. October 1936 to September 1945 not equivalent owing to exclusion of greater part of flow released from Cuyamaca Reservoir.

GAGE.--Water-stage recorder. Datum of gage is 663.0 ft above mean sea level; gage readings have been converted to elevations above mean sea level. Prior to Oct. 1, 1972, nonrecording gage at same site at datum 110 ft lower.

EXTREMES.--Current year: Maximum contents observed, 45,330 acre-ft July 5 (elevation, 694.08 ft); minimum, 9,620 acre-ft Dec. 31 (elevation, 635.37 ft).
Period of record (1945-66, 1972-73): Maximum contents, 62,400 acre-ft Oct. 1, 1945 (elevation, 708.75 ft); minimum, 2,252 acre-ft May 1, 1957 (elevation, 606.28 ft).

REMARKS.--Reservoir is formed by hydraulic fill rock embankment, completed in 1935. Capacity table dated Mar. 29, 1956. Capacity of reservoir at spillway level (elevation, 750.00 ft), 112,810 acre-ft. Dead storage below lowest outlet (elevation, 574.0 ft), 59.2 acre-ft. Reservoir storage includes supplemental Colorado River water. No significant diversion above reservoir. Flow partly regulated by Cuyamaca Reservoir. Water is released as required for municipal use and irrigation.

COOPERATION.--Records furnished by San Diego County, Department of Sanitation and Flood Control.

MONTHEND ELEVATION AND CONTENTS, WATER YEAR OCTOBER 1972 TO SEPTEMBER 1973

Date	Elevation (feet)a	Contents (acre-feet)	Change in contents (acre-feet)
Sept. 30.....	636.96	10,180	--
Oct. 31.....	636.86	10,140	-40
Nov. 30.....	637.04	10,210	+70
Dec. 31.....	635.37	9,620	-590
CAL YR 1972....	--	--	--
Jan. 31.....	639.54	11,130	+1,510
Feb. 28.....	652.28	16,620	+5,490
Mar. 31.....	674.81	29,980	+13,360
Apr. 30.....	682.80	35,950	+5,970
May 31.....	690.40	42,150	+6,200
June 30.....	693.79	45,080	+2,930
July 31.....	688.86	40,850	-4,230
Aug. 31.....	682.90	36,020	-4,830
Sept. 30.....	678.99	33,020	-3,000
WTR YR 1973....	--	--	+22,840

a Elevation at 0800.

11022100 SAN VICENTE RESERVOIR NEAR LAKESIDE, CALIF.

LOCATION.--Lat 32°54'45", long 116°55'25", in SE¼SW¼NW¼ sec.31, T.14 S., R.1 E., San Diego County, near center of upstream face of San Vicente Dam on San Vicente Creek, 3.6 miles north of Lakeside.

DRAINAGE AREA.--74.2 sq mi.

PERIOD OF RECORD.--October 1946 to September 1961 published with San Vicente Creek at San Vicente Dam, at Foster (sta 11022000). October 1972 to September 1973.

GAGE.--Water-stage recorder. Datum of gage is 560.0 ft above mean sea level; gage readings have been converted to elevations above mean sea level. October 1946 to September 1961, nonrecording gage at same site at datum 100 ft lower.

EXTREMES.--Current year: Maximum contents observed, 83,980 acre-ft July 31 (elevation, 644.07 ft); minimum, 61,060 acre-ft Oct. 1 (elevation, 620.50 ft).
Period of record (1946-61, 1972-73): Maximum contents, 83,980 acre-ft July 31, 1973 (elevation, 664.07 ft); minimum, 12,390 acre-ft Nov. 1, 1947 (elevation, 549.22 ft).

REMARKS.--Reservoir is formed by concrete gravity dam, constructed in 1941-43 by city of San Diego; storage began during construction period. Capacity table is dated Feb. 18, 1944. Capacity of reservoir at spillway level (elevation, 650 ft), 90,230 acre-ft. Dead storage below lowest outlet (elevation, 493.0 ft), 350 acre-ft. Reservoir storage includes supplemental water from the San Diego River, Santa Ysabel Creek, and Colorado River basins. No diversion above reservoir. Water is released as required for municipal use.

COOPERATION.--Gage heights furnished by San Diego County, Department of Sanitation and Flood Control.

MONTHEND ELEVATION AND CONTENTS, WATER YEAR OCTOBER 1972 TO SEPTEMBER 1973

Date	Elevation (feet)a	Contents (acre-feet)	Change in contents (acre-feet)
Sept. 30.....	620.36	60,940	--
Oct. 31.....	625.46	65,620	+4,680
Nov. 30.....	630.93	70,810	+5,190
Dec. 31.....	630.00	69,920	-890
CAL YR 1972....	--	--	--
Jan. 31.....	634.52	74,310	+4,390
Feb. 28.....	637.03	76,800	+2,490
Mar. 31.....	641.67	81,500	+4,700
Apr. 30.....	643.22	83,100	+1,600
May 31.....	643.36	83,250	+150
June 30.....	641.94	81,780	-1,470
July 31.....	644.07	83,980	+2,200
Aug. 31.....	641.76	81,600	-2,380
Sept. 30.....	639.02	78,800	-2,800
WTR YR 1973....	--	--	+17,860

a Elevation at 0800.

11022500 SAN DIEGO RIVER NEAR SANTEE, CALIF.

LOCATION.--Lat 32°49'29", long 117°03'17", in Ex Mission San Diego Grant, San Diego County, on right bank in Mission Gorge, 0.2 mile upstream from left tributary, and 6 miles west of Santee.

DRAINAGE AREA.--377 sq mi.

PERIOD OF RECORD.--May 1912 to December 1915, March 1916 to current year. Monthly discharge only for some periods and yearly estimates only for 1924-25, published in WSP 1315-B.

GAGE.--Water-stage recorder and unfinished rubble dam control. Altitude of gage is 180 ft (from topographic map). Prior to Nov. 10, 1920, nonrecording gage at site 1.5 miles upstream at different datum. Nov. 10, 1920, to Dec. 1, 1954, water-stage recorder at present site at datum 1.0 ft higher.

AVERAGE DISCHARGE.--60 years, 22.4 cfs (16,230 acre-ft per year).

EXTREMES.--Current year: Maximum discharge, 509 cfs Feb. 13 (gage height, 5.13 ft); minimum daily, 1.5 cfs June 13, 14.
Period of record: Maximum discharge, 70,200 cfs Jan. 27, 1916 (gage height, 25.1 ft, site and datum then in use), based on slope-conveyance computation; no flow at times in some years.

REMARKS.--Records good. Flow regulated by Cuyamaca Reservoir (capacity, 11,540 acre-ft), El Capitan Reservoir (see sta 11020500), and San Vicente Reservoir (see sta 11022000). Diversions by city of San Diego for municipal supply and by Helix Irrigation District. AVERAGE DISCHARGE represents flow to ocean during period of record, regardless of upstream development. Records of suspended-sediment discharge for the current year are published in Part 2 of this report.

DISCHARGE, IN CUBIC FEET PER SECOND, WATER YEAR OCTOBER 1972 TO SEPTEMBER 1973

DAY	OCT	NOV	DEC	JAN	FEB	MAR	APR	MAY	JUN	JUL	AUG	SEP
1	3.1	5.2	8.1	9.3	10	19	15	10	5.3	3.8	4.4	3.3
2	3.3	5.2	8.0	9.2	9.9	16	16	9.6	5.5	3.5	4.1	3.6
3	3.1	5.2	8.2	9.3	9.7	15	15	9.1	5.6	3.2	4.0	3.4
4	3.1	5.2	39	20	14	16	14	8.2	5.4	2.9	4.0	3.4
5	2.8	6.2	108	34	11	19	14	8.2	4.9	3.1	5.2	2.8
6	2.7	7.4	17	11	26	21	14	8.1	4.3	2.9	5.2	2.3
7	2.9	7.6	35	9.7	16	60	14	7.8	3.6	3.2	4.5	1.9
8	3.7	8.2	48	9.1	12	57	15	7.3	3.1	4.1	4.2	2.1
9	4.1	7.9	52	9.1	11	56	14	7.0	2.5	3.6	4.1	2.4
10	4.1	7.1	19	26	11	30	14	6.6	2.1	4.0	4.3	3.3
11	4.2	46	16	12	157	96	13	6.3	2.0	4.5	4.2	3.8
12	4.4	29	13	9.4	74	133	13	6.4	1.7	4.2	5.1	3.7
13	5.2	12	12	8.8	187	65	11	6.2	1.5	4.0	4.9	3.4
14	5.0	13	11	8.6	64	56	12	6.4	1.5	3.9	4.2	3.5
15	4.8	29	11	8.4	92	33	12	6.4	2.1	4.5	4.5	3.5
16	4.6	55	10	8.7	55	26	12	6.2	2.9	4.3	4.4	3.9
17	4.4	110	9.5	74	30	22	10	6.0	3.8	4.1	4.0	4.0
18	12	26	9.3	14	24	20	10	5.8	4.5	3.6	4.0	3.4
19	14	13	9.1	52	24	21	10	5.6	4.2	3.5	4.7	3.3
20	30	11	9.0	16	20	101	10	5.9	4.0	3.5	5.0	4.2
21	16	10	8.8	12	17	57	12	6.1	3.8	3.7	5.3	4.5
22	8.0	9.5	8.7	11	16	59	9.2	5.8	4.0	4.2	4.7	5.2
23	7.0	9.1	8.7	10	17	30	8.3	5.5	4.2	3.8	4.2	5.7
24	6.4	9.0	8.9	9.8	16	21	7.6	5.4	4.7	3.2	3.5	5.8
25	5.7	9.2	9.1	9.6	15	19	7.0	5.4	4.6	3.2	3.0	5.6
26	5.2	9.1	9.0	9.7	14	24	6.8	5.4	3.9	3.5	3.3	5.8
27	5.6	9.0	8.9	8.9	15	42	7.0	5.5	3.4	3.8	3.2	5.5
28	5.4	8.8	9.0	8.7	36	29	7.1	5.7	3.0	4.3	2.5	5.0
29	5.2	8.3	9.1	8.7	------	30	7.4	5.5	2.6	5.4	2.1	5.2
30	5.2	8.2	9.1	9.5	------	18	8.9	5.0	2.8	5.2	2.8	5.2
31	5.2	------	9.3	14	------	16	------	5.1	------	4.7	3.3	------
TOTAL	196.4	499.4	550.8	470.5	1,003.6	1,227	339.3	203.5	107.5	119.4	126.9	118.7
MEAN	6.34	16.6	17.8	15.2	35.8	39.6	11.3	6.56	3.58	3.85	4.09	3.96
MAX	30	110	108	74	187	133	16	10	5.6	5.4	5.3	5.8
MIN	2.7	5.2	8.0	8.4	9.7	15	6.8	5.0	1.5	2.9	2.1	1.9
AC-FT	390	991	1,090	933	1,990	2,430	673	404	213	237	252	235

CAL YR 1972 TOTAL 2,432.7 MEAN 6.65 MAX 110 MIN 1.1 AC-FT 4,830
WTR YR 1973 TOTAL 4,963.0 MEAN 13.6 MAX 187 MIN 1.5 AC-FT 9,840

11023320 POMERADO CREEK AT POWAY ROAD, NEAR POWAY, CALIF.

LOCATION.--Lat 32°57'07", long 117°03'48", in NE¼SW¼SW¼ sec.14, T.14 S., R.2 W., San Diego County, on right bank at Poway Road, 0.2 mile upstream from mouth, and 2.0 miles southwest of Poway.

DRAINAGE AREA.--4.14 sq mi.

PERIOD OF RECORD.--October 1970 to current year.

GAGE.--Water-stage recorder. Altitude of gage is 440 ft (from topographic map).

EXTREMES.--Current year: Maximum discharge, 111 cfs Nov. 16 (gage height, 4.33 ft); no flow many days.
Period of record: Maximum discharge, 111 cfs Nov. 16, 1972 (gage height, 4.33 ft); no flow many days in each year.

REMARKS.--Records good. No regulation or diversion.

DISCHARGE, IN CUBIC FEET PER SECOND, WATER YEAR OCTOBER 1972 TO SEPTEMBER 1973

DAY	OCT	NOV	DEC	JAN	FEB	MAR	APR	MAY	JUN	JUL	AUG	SEP
1	0	0	.02	.06	.04	.10	.11	.03	.02	.01	0	
2	0	0	.02	.06	.04	.06	.10	.03	.02	.01	0	
3	0	0	.02	.08	.24	.06	.09	.02	.02	0	0	
4	0	0	11	1.0	.18	.33	.08	.02	.02	0	0	
5	0	.05	.63	.11	.06	.38	.09	.07	.01	0	0	
6	0	0	.11	.08	.33	.89	.08	.02	.01	.01	0	
7	.03	0	1.3	.07	.06	2.5	.08	.02	.01	.01	0	
8	0	.76	4.2	.08	.05	8.6	.08	.02	.01	.02	0	
9	0	0	1.3	.35	.05	1.3	.08	.02	.02	.02	0	
10	0	0	.20	1.4	.05	.39	.06	.03	.01	0	0	
11	0	6.8	.12	.10	8.8	15	.07	.06	.01	.01	.01	
12	0	.06	.13	.08	1.8	6.7	.07	.03	0	0	0	
13	0	0	.10	.08	8.6	2.3	.08	.05	.01	0	0	
14	0	11	.07	.08	.65	2.1	.08	.03	0	.01	0	
15	0	.29	.06	.08	.40	.59	.07	.02	0	.03	0	
16	0	14	.06	3.5	.27	.22	.07	.02	.01	.01	.02	
17	0	4.1	.06	1.7	.18	.15	.11	.02	.01	0	.01	
18	.01	.15	.06	2.1	.06	.13	.13	.02	.01	.01	0	
19	.87	.06	.08	3.5	.07	.11	.09	.02	0	0	0	
20	1.4	.04	.08	.13	.08	9.4	.10	.02	0	.01	0	
21	0	.03	.06	.06	.07	.69	.05	.02	0	.02	0	
22	0	.03	.06	.05	.06	2.0	.04	.01	.01	.03	0	
23	0	.03	.06	.04	.06	.28	.04	.03	.01	.11	0	
24	0	.02	.06	.04	.05	.16	.04	.02	0	.04	0	
25	0	.02	.06	.07	.05	.13	.04	.14	.01	.01	0	
26	0	.02	.06	.07	.05	.60	.04	.02	.01	.02	0	
27	0	.02	.06	.04	.05	3.0	.04	.01	.01	0	0	
28	0	.02	.06	.04	1.6	2.4	.04	.01	.01	0	0	
29	0	.01	.06	.05	------	1.0	.05	.02	0	0	0	
30	0	.01	.06	.14	------	.18	.17	.01	.02	0	0	
31	0	------	.06	.05	------	.13	------	.01	------	0	0	------
TOTAL	2.31	37.52	20.28	15.29	24.00	61.88	2.27	.87	.28	.39	.04	0
MEAN	.075	1.25	.65	.49	.86	2.00	.076	.028	.009	.013	.001	0
MAX	1.4	14	11	3.5	8.8	15	.17	.14	.02	.11	.02	0
MIN	0	0	.02	.04	.04	.06	.04	.01	0	0	0	0
AC-FT	4.6	74	40	30	48	123	4.5	1.7	.6	.8	.08	0

CAL YR 1972 TOTAL 63.36 MEAN .17 MAX 14 MIN 0 AC-FT 126
WTR YR 1973 TOTAL 165.13 MEAN .45 MAX 15 MIN 0 AC-FT 328

11023330 LOS PENASQUITOS CREEK BELOW POWAY CREEK, NEAR POWAY, CALIF.

LOCATION.--Lat 32°56'58", long 117°04'08", in NW¼NE¼NE¼ sec.22, T.14 S., R.2 W., San Diego County, on right bank at Cobblestone Creek Road, 0.2 mile downstream from confluence of Poway and Pomerado Creeks, and 2.0 miles southwest of Poway.

DRAINAGE AREA.--31.2 sq mi.

PERIOD OF RECORD.--October 1970 to current year.

GAGE.--Water-stage recorder and rain-gage attachment. Altitude of gage is 415 ft (from topographic map).

EXTREMES.--Current year: Maximum discharge, 368 cfs Nov. 16 (gage height, 7.05 ft); no flow many days.
Period of record: Maximum discharge, 368 cfs Nov. 16, 1972 (gage height, 7.05 ft); no flow for parts of each year.

REMARKS.--Records good. Flow partly regulated by small conservation reservoirs.

DISCHARGE, IN CUBIC FEET PER SECOND, WATER YEAR OCTOBER 1972 TO SEPTEMBER 1973

DAY	OCT	NOV	DEC	JAN	FEB	MAR	APR	MAY	JUN	JUL	AUG	SEP
1	0	.01	.07	.14	.31	.85	2.3	.28	.10	.04	.01	.01
2	0	.01	.07	.10	.29	.63	1.8	.17	.09	.02	.02	.01
3	0	.01	.07	.15	.90	.97	1.2	.33	.08	.01	.02	0
4	0	.01	42	5.6	1.8	2.7	.82	.71	.06	.03	.02	.01
5	0	.05	4.1	1.5	.46	2.8	.48	.58	.05	.03	.03	.01
6	0	.03	.66	.39	2.8	5.7	1.0	.25	.03	.03	.03	0
7	0	.02	5.2	.29	.50	16	1.8	.49	.03	.04	.03	0
8	0	1.5	21	.23	.62	39	1.9	.26	.01	.05	.04	.01
9	0	.06	5.7	.79	.13	9.3	1.3	.22	.02	.06	.05	0
10	0	.04	1.3	5.2	.12	2.4	1.1	.16	.03	.06	.04	0
11	0	24	.80	1.1	50	45	.80	.20	.04	.04	.04	0
12	0	1.8	.58	.61	18	40	1.6	.17	.06	.01	.04	0
13	0	.28	.53	.61	56	17	1.4	.24	.05	.01	.04	0
14	0	45	.41	.51	8.1	19	1.8	.25	.05	.01	.04	0
15	0	5.3	.36	.36	7.0	7.6	1.8	.20	.06	.01	.02	0
16	0	66	.33	9.7	4.2	4.6	1.6	.13	.07	0	.02	0
17	0	20	.31	13	2.4	3.0	1.5	.13	.08	.01	.02	0
18	0	1.3	.29	5.2	1.5	2.1	1.8	.12	.08	0	.02	0
19	2.2	.52	.28	20	1.2	1.6	1.5	.13	.05	.01	.02	0
20	10	.33	.32	1.6	.99	53	1.3	.21	.04	0	.03	.01
21	.92	.24	.26	.90	1.5	10	.27	.17	.02	0	.02	0
22	.06	.20	.24	.61	1.1	15	.12	.15	.01	0	.01	.01
23	.05	.15	.25	.31	.78	6.4	.15	.17	.01	.01	.01	.01
24	.04	.12	.25	.30	.63	4.4	.16	.16	.01	.01	.01	.01
25	.03	.11	.18	.36	.55	2.9	.19	.94	.01	0	0	.01
26	.02	.10	.14	.60	.56	4.0	.20	.17	.01	.01	0	.01
27	.04	.10	.15	.29	.61	12	.16	.09	.02	0	0	.01
28	.03	.09	.17	.24	11	11	.18	.07	.01	0	0	.01
29	.02	.09	.22	.24	------	9.4	.27	.07	.01	0	0	.01
30	.02	.07	.13	1.4	------	3.8	1.1	.07	.02	0	.01	.02
31	.01	------	.11	.59	------	2.9	------	.07	------	.01	.01	------
TOTAL	13.50	167.54	36.48	77.92	174.05	355.05	31.60	7.36	1.21	.51	.65	.16
MEAN	.44	5.58	2.79	2.51	6.22	11.5	1.05	.24	.040	.017	.021	.005
MAX	10	66	42	20	56	53	2.3	.94	.10	.06	.05	.02
MIN	0	.01	.07	.10	.12	.63	.12	.07	.01	0	0	0
AC-FT	27	332	172	155	345	704	63	15	2.4	1.0	1.3	.3
(a)	1.14	3.69	1.98	2.28	2.28	3.35	0	0	0	0	0	0

CAL YR 1972 TOTAL 281.62 MEAN .77 MAX 66 MIN 0 AC-FT 557
WTR YR 1973 TOTAL 916.03 MEAN 2.51 MAX 66 MIN 0 AC-FT 1,820

a Precipitation, in inches.

11023340 LOS PENASQUITOS CREEK NEAR POWAY, CALIF.

LOCATION.--Lat 32°56'35", long 117°07'15", in Los Penasquitos Grant, San Diego County, on left bank 1.0 mile downstream from Cypress Creek, and 5.5 miles southwest of Poway.

DRAINAGE AREA.--42.1 sq mi.

PERIOD OF RECORD.--October 1964 to current year.

GAGE.--Water-stage recorder and crest-stage gage. Altitude of gage is 260 ft (from topographic map).

AVERAGE DISCHARGE.--9 years, 3.93 cfs (2,850 acre-ft per year).

EXTREMES.--Current year: Maximum discharge, 512 cfs Nov. 16 (gage height, 4.94 ft); minimum daily, 0.03 cfs Aug. 19, 23, 24.
Period of record: Maximum discharge, 2,100 cfs Dec. 6, 1966 (gage height, 6.90 ft, in gage well, 7.70 ft, from profile of floodmarks), from rating curve extended above 400 cfs on basis of slope-area measurement at gage height 6.23 ft in gage well, 7.40 ft, from outside gage; no flow May 16, 17, 1968, July 1, 1972.

REMARKS.--Records fair. Flow partly regulated by several conservation reservoirs above station. Pumping from wells along stream for irrigation. Flow augmented by reclaimed water from Poway area.

DISCHARGE, IN CUBIC FEET PER SECOND, WATER YEAR OCTOBER 1972 TO SEPTEMBER 1973

DAY	OCT	NOV	DEC	JAN	FEB	MAR	APR	MAY	JUN	JUL	AUG	SEP
1	.30	.09	.32	.38	1.5	4.5	4.6	2.2	.34	.17	.14	.06
2	.30	.08	.31	.34	1.3	4.0	4.3	1.6	.42	.14	.16	.08
3	.38	.08	.30	.36	1.5	3.0	3.8	1.4	.47	.12	.16	.08
4	.40	.09	56	3.2	3.4	3.3	3.3	1.1	.36	.11	.20	.09
5	.42	.15	45	5.3	1.6	3.5	2.9	1.1	.27	.11	.21	.08
6	.29	.25	2.0	1.2	3.8	3.8	3.0	1.2	.22	.11	.24	.09
7	.17	.23	6.7	.82	2.4	17	3.8	.95	.22	.13	.24	.09
8	.13	1.7	23	.70	1.1	56	4.7	.95	.20	.12	.10	.10
9	.35	.61	18	.94	1.0	40	3.7	.99	.15	.09	.09	.10
10	.28	.27	2.6	9.9	.84	8.6	3.2	.72	.15	.08	.08	.10
11	.40	65	1.6	1.4	68	71	3.8	.58	.16	.10	.09	.10
12	.31	5.9	1.2	.90	40	107	3.0	.61	.13	.12	.10	.12
13	.26	1.2	1.0	.77	88	39	3.8	.61	.17	.11	.10	.12
14	.22	52	.96	.79	18	34	3.7	.54	.17	.10	.07	.13
15	.21	47	.91	.74	8.8	13	3.6	.60	.21	.10	.05	.14
16	.22	107	.77	4.8	8.1	8.8	3.3	.46	.17	.09	.04	.12
17	.27	84	.74	49	4.6	6.8	3.1	.39	.15	.08	.04	.11
18	.42	7.4	.72	4.1	3.4	5.7	3.3	.43	.13	.06	.04	.13
19	4.7	3.6	.68	47	3.0	4.3	2.9	.33	.12	.06	.03	.12
20	4.4	2.4	.72	3.4	2.8	74	2.4	.28	.09	.06	.11	.11
21	1.7	1.7	.78	1.6	2.7	39	2.6	.27	.07	.05	.05	.10
22	.79	1.1	.73	1.7	3.4	19	1.4	.35	.07	.05	.04	.10
23	.48	.83	.69	1.1	2.7	11	1.3	.28	.08	.06	.03	.09
24	.34	.58	.63	.94	2.3	7.8	1.3	.30	.10	.06	.03	.09
25	.34	.48	.56	1.0	2.1	6.5	1.2	.27	.11	.07	.04	.08
26	.27	.42	.47	1.4	1.9	6.6	1.2	.61	.10	.07	.04	.08
27	.21	.51	.39	1.1	2.2	12	1.3	.44	.72	.08	.05	.07
28	.19	.42	.39	1.1	14	11	1.5	.29	.92	.09	.05	.07
29	.15	.34	.42	1.3	------	14	2.0	.22	.92	.11	.04	.06
30	.19	.33	.42	1.4	------	6.6	2.7	.19	.50	.12	.05	.06
31	.10	------	.39	2.5	------	5.4	------	.21	------	.13	.06	------
TOTAL	19.19	385.76	169.40	151.18	294.44	646.2	86.7	20.47	7.89	2.95	2.77	2.87
MEAN	.62	12.9	5.46	4.88	10.5	20.8	2.89	.66	.26	.095	.089	.096
MAX	4.7	107	56	49	88	107	4.7	2.2	.92	.17	.24	.14
MIN	.10	.08	.30	.34	.84	3.0	1.2	.19	.07	.05	.03	.06
AC-FT	38	765	336	300	584	1,280	172	41	16	5.9	5.5	5.7

CAL YR 1972 TOTAL 1,040.30 MEAN 2.84 MAX 107 MIN 0 AC-FT 2,060
WTR YR 1973 TOTAL 1,789.82 MEAN 4.90 MAX 107 MIN .03 AC-FT 3,550

PEAK DISCHARGE (BASE, 60 CFS)

DATE	TIME	G.H.	DISCHARGE	DATE	TIME	G.H.	DISCHARGE
11-11	1200	3.16	131	1-19	0400	2.90	94
11-14	1800	4.30	350	2-11	0815	3.11	126
11-15	0015	3.09	121	2-11	1600	3.04	116
11-16	1815	4.94	512	2-13	0845	3.34	167
11-17	0730	3.76	242	3-8	1400	3.54	198
12-4	1800	3.76	242	3-11	2000	3.32	156
12-8	2030	2.83	85	3-12	0445	3.40	170
1-17	0445	2.91	95	3-20	1545	3.48	186

11025500 SANTA YSABEL CREEK NEAR RAMONA, CALIF.

LOCATION.--Lat 33°06'25", long 116°51'55", in SW¼NW¼NE¼ sec.27, T.12 S., R.1 E., San Diego County, on left bank 1.6 miles downstream from Temescal Creek, and 4.5 miles north of Ramona.

DRAINAGE AREA.--112 sq mi.

PERIOD OF RECORD.--February 1912 to February 1923, October 1943 to current year. Monthly discharge only for February 1912, published in WSP 1315-B.

GAGE.--Water-stage recorder and concrete cutoff wall, repaired at times. Datum of gage is 847.88 ft above mean sea level (levels by city of San Diego Water Department). See WSP 1315-A for history of changes prior to Feb. 3, 1923.

EXTREMES.--Current year: Maximum discharge, 141 cfs Mar. 11 (gage height, 3.47 ft); no flow for many days.
Period of record: Maximum discharge, 28,400 cfs Jan. 27, 1916 (gage height, 14.0 ft, datum then in use), from rating curve extended above 1,500 cfs based on slope-conveyance computation of maximum flow; no flow at times in some years.

REMARKS.--Records good except those for period of no gage-height record, which are poor. Flow regulated by Sutherland Reservoir (see sta 11024000) since July 1954. Some small diversions above station.

DISCHARGE, IN CUBIC FEET PER SECOND, WATER YEAR OCTOBER 1972 TO SEPTEMBER 1973

DAY	OCT	NOV	DEC	JAN	FEB	MAR	APR	MAY	JUN	JUL	AUG	SEP
1	0	.01	.04	.04	.87	9.9	23	8.3	.90	.01	.01	0
2	0	.01	.06	.05	.67	5.5	21	5.5	1.5	.01	0	0
3	0	.01	.17	.10	.58	4.3	19	4.3	2.0	.01	.01	0
4	0	.02	.80	.09	.66	4.6	17	3.9	1.8	.01	.01	0
5	0	.02	.04	.04	.66	8.8	16	5.4	1.6	.01	.02	0
6	0	.02	.01	.02	1.4	9.4	15	7.0	1.2	.01	.02	0
7	0	.02	.01	.02	1.5	45	14	5.4	.90	.01	.02	0
8	0	.02	.41	.02	1.6	40	13	4.3	.75	.01	.03	0
9	0	.02	.11	.06	1.2	46	12	3.8	.60	.01	.03	0
10	0	.04	.01	.06	1.1	19	12	3.4	.48	.01	.04	0
11	0	.46	.01	.02	16	45	12	3.0	.40	.01	0	0
12	0	.12	.01	.02	30	62	11	3.0	.32	.01	0	0
13	0	.01	.01	.02	33	51	11	3.0	.29	.01	0	0
14	0	1.2	.01	.02	14	62	10	3.1	.24	.01	0	0
15	0	.04	.01	.02	11	30	10	2.9	.22	.01	0	0
16	0	1.7	.01	.17	8.6	24	10	2.5	.21	.01	0	0
17	0	.13	.01	1.2	6.6	21	9.9	2.2	.20	.01	0	.01
18	0	.04	.02	1.4	5.6	19	11	2.0	.20	.01	0	.01
19	0	.02	.02	10	4.7	16	9.9	2.0	.06	0	0	.01
20	.01	.04	.04	7.1	4.0	31	9.2	2.0	.03	0	0	0
21	.01	.04	.04	4.0	3.8	33	8.5	1.8	.01	0	0	0
22	0	.04	.06	2.8	3.8	64	7.6	1.7	.01	0	0	0
23	0	.07	.09	2.2	3.5	32	7.0	1.5	.01	0	0	0
24	0	.12	.10	1.7	3.3	25	6.8	1.4	.01	0	0	0
25	0	.09	.12	1.6	3.0	22	5.9	1.4	.01	0	0	0
26	0	.04	.13	2.4	2.8	22	5.3	1.5	.01	0	0	0
27	0	.06	.08	1.9	2.6	30	4.9	1.6	.01	0	0	0
28	0	.06	.11	1.4	8.3	38	4.8	1.4	.01	0	0	0
29	0	.09	.09	1.1	------	52	5.3	1.0	.01	0	0	0
30	0	.04	.13	1.1	------	29	7.4	.70	.01	0	0	0
31	.01	------	.13	.95	------	25	------	.52	------	.01	0	------
TOTAL	.03	4.60	2.89	41.62	174.84	925.5	329.5	91.52	14.00	.19	.19	.03
MEAN	.001	.15	.093	1.34	6.24	29.9	11.0	2.95	.47	.006	.006	.001
MAX	.01	1.7	.80	10	33	64	23	8.3	2.0	.01	.04	.01
MIN	0	.01	.01	.02	.58	4.3	4.8	.52	.01	0	0	0
AC-FT	.06	9.1	5.7	83	347	1,840	654	182	28	.4	.4	.06

CAL YR 1972 TOTAL 18.93 MEAN .05 MAX 1.7 MIN 0 AC-FT 38
WTR YR 1973 TOTAL 1,584.91 MEAN 4.34 MAX 64 MIN 0 AC-FT 3,140

NOTE.--No gage-height record May 11 to June 17.

11026000 SANTA YSABEL CREEK NEAR SAN PASQUAL, CALIF.

LOCATION.--Lat 33°05'10", long 116°54'56", in NE¼NW¼SE¼ sec.31, T.12 S., R.1 E., San Diego County, on left bank 1.1 miles downstream from Clevenger Canyon, and 2 miles east of San Pasqual.

DRAINAGE AREA.--128 sq mi.

PERIOD OF RECORD.--December 1905 to September 1910 and May 1911 to September 1912 (published as "near Escondido"), April 1947 to November 1955 (irrigation seasons only), April 1956 to current year. Records for October to December 1910, published in WSP 447, have been found to be in error and should not be used.

GAGE.--Water-stage recorder. Concrete control since April 1947. Altitude of gage is 510 ft (from topographic map). Dec. 17, 1905, to Sept. 30, 1912, nonrecording gage at site 0.2 mile downstream at different datum.

EXTREMES.--Current year: Maximum discharge, 270 cfs Mar. 22 (gage height, 3.50 ft, from high-water mark); no flow Oct. 1 to Nov. 15, July 2 to Sept. 30.
1905-12, 1947 to current year: Maximum discharge observed, 8,000 cfs Mar. 24, 1906 (gage height, 6.3 ft, site and datum then in use); no flow at times in most years.

REMARKS.--Records good except those for periods of no gage-height record, which are poor. Flow regulated by Sutherland Reservoir (capacity, 29,680 acre-ft) since July 1954. Small diversion above station.

DISCHARGE, IN CUBIC FEET PER SECOND, WATER YEAR OCTOBER 1972 TO SEPTEMBER 1973

DAY	OCT	NOV	DEC	JAN	FEB	MAR	APR	MAY	JUN	JUL	AUG	SEP
1		0	.02	.08	.90	11	27	10	1.7	.01		
2		0	.03	.07	.79	5.7	24	7.2	2.1	0		
3		0	.03	.09	.81	4.5	21	5.3	2.3	0		
4		0	.16	.26	.88	4.5	20	4.6	2.1	0		
5		0	.40	.26	.82	7.3	18	5.6	1.6	0		
6		0	.08	.16	1.3	9.2	16	8.0	1.0	0		
7		0	.09	.12	1.5	52	15	6.7	.47	0		
8		0	.40	.12	1.5	44	14	5.3	.25	0		
9		0	.94	.16	1.3	83	13	4.6	.14	0		
10		0	.23	.24	1.2	24	13	3.9	.09	0		
11		0	.13	.16	14	47	12	3.5	.06	0		
12		0	.09	.14	37	112	12	3.5	.06	0		
13		0	.08	.13	43	67	11	3.5	.06	0		
14		0	.08	.12	18	105	11	3.6	.06	0		
15		0	.07	.12	14	43	10	3.4	.06	0		
16		2.4	.06	.20	11	30	10	2.7	.06	0		
17		.73	.05	1.0	7.8	25	10	2.3	.06	0		
18		.10	.05	.35	6.4	21	10	2.3	.05	0		
19		.02	.05	6.6	5.2	19	9.5	2.3	.04	0		
20		.02	.05	7.5	4.3	34	9.1	2.2	.03	0		
21		.01	.05	3.9	3.8	46	8.4	2.0	.03	0		
22		.01	.05	2.7	3.6	120	7.6	1.8	.02	0		
23		.01	.05	2.0	3.4	70	7.2	1.6	.02	0		
24		.01	.05	1.7	3.2	45	7.0	1.6	.01	0		
25		.01	.05	1.6	3.0	42	6.9	1.6	.01	0		
26		.01	.05	2.4	2.9	42	6.7	1.9	.01	0		
27		.01	.05	1.8	2.7	50	6.3	1.6	.01	0		
28		.02	.08	1.4	5.4	63	5.9	1.2	.01	0		
29		.02	.09	1.2	------	90	6.5	.71	.01	0		
30		.02	.09	1.2	------	54	8.4	.57	.01	0		
31		------	.09	1.1	------	35	------	.79	------	0		------
TOTAL	0	3.40	3.79	38.88	199.70	1,405.2	356.5	105.87	12.43	.01	0	0
MEAN	0	.11	.12	1.25	7.13	45.3	11.9	3.42	.41	.0003	0	0
MAX	0	2.4	.94	7.5	43	120	27	10	2.3	.01	0	0
MIN	0	0	.02	.07	.79	4.5	5.9	.57	.01	0	0	0
AC-FT	0	6.7	7.5	77	396	2,790	707	210	25	.02	0	0

CAL YR 1972 TOTAL 18.65 MEAN .05 MAX 2.4 MIN 0 AC-FT 37
WTR YR 1973 TOTAL 2,125.78 MEAN 5.82 MAX 120 MIN 0 AC-FT 4,220

NOTE.--No gage-height record Mar. 22 to Apr. 16; July 12 to Aug. 22.

11027000 GUEJITO CREEK NEAR SAN PASQUAL, CALIF.

LOCATION.--Lat 33°06'57", long 116°57'08", in NW¼NW¼SE¼ sec.23, T.12 S., R.1 W., San Diego County, on left bank 0.3 mile upstream from Rockwood Canyon Creek, and 1.8 miles north of San Pasqual.

DRAINAGE AREA.--22.5 sq mi.

PERIOD OF RECORD.--December 1946 to current year.

GAGE.--Water-stage recorder and concrete control. Altitude of gage is 560 ft (from topographic map).

AVERAGE DISCHARGE.--26 years (1947-73), 1.48 cfs (1,070 acre-ft per year).

EXTREMES.--Current year: Maximum discharge, 80 cfs Mar. 13 (gage height, 2.79 ft); no flow many days.
Period of record: Maximum discharge, 2,920 cfs Dec. 6, 1966 (gage height, 6.78 ft), from rating curve extended above 440 cfs on basis of slope-area measurements at gage heights 5.83 and 6.30 ft; no flow at times in most years.

REMARKS.--Records good. No regulation above station. Diversion for irrigation 0.2 mile upstream.

DISCHARGE, IN CUBIC FEET PER SECOND, WATER YEAR OCTOBER 1972 TO SEPTEMBER 1973

DAY	OCT	NOV	DEC	JAN	FEB	MAR	APR	MAY	JUN	JUL	AUG	SEP
1		0	.01	.17	.36	2.4	4.0	1.4	.40	.04	.01	0
2		0	.01	.16	.33	1.3	3.6	1.1	.57	.04	.01	0
3		0	.01	.19	.34	.99	3.2	.87	.60	.04	0	0
4		0	1.7	.61	.59	1.3	2.9	.72	.50	.04	0	0
5		0	1.6	.64	.44	2.2	2.5	.77	.36	.04	0	0
6		0	.37	.35	.70	2.9	2.3	.87	.27	.04	0	0
7		0	.49	.29	.72	19	2.3	.84	.19	.04	0	0
8		.01	2.2	.27	.54	27	2.1	.72	.13	.03	0	0
9		.01	3.0	.49	.44	18	1.8	.62	.12	.03	0	0
10		.01	.95	.96	.42	6.2	1.9	.53	.11	.03	0	0
11		.01	.59	.49	4.1	12	1.8	.46	.11	.02	0	0
12		.01	.41	.37	12	19	1.7	.46	.11	.03	0	0
13		.01	.36	.33	15	17	1.7	.48	.12	.03	0	0
14		.06	.30	.31	3.3	18	1.7	.57	.13	.03	0	0
15		.12	.27	.31	2.4	7.2	1.7	.61	.12	.03	0	0
16		3.0	.23	.58	1.9	4.6	1.6	.50	.12	.03	0	0
17		.90	.21	5.3	1.4	3.8	2.1	.44	.11	.02	0	.01
18		.19	.22	1.2	1.1	3.4	1.8	.41	.11	.02	.01	.01
19		.07	.21	8.0	.90	3.1	1.6	.37	.10	.02	.01	0
20		.04	.23	1.6	.71	5.6	1.5	.38	.09	.02	.01	0
21		.03	.21	1.0	.64	9.3	1.4	.37	.07	.02	.01	0
22		.01	.19	.78	.59	25	1.2	.36	.07	.02	.01	0
23		.01	.19	.59	.59	11	1.1	.32	.07	.02	.01	0
24		.01	.18	.51	.56	5.5	1.1	.30	.06	.02	0	0
25		.01	.16	.51	.53	4.4	1.1	.31	.06	.01	.01	0
26		.01	.13	.87	.51	4.0	1.0	.38	.06	.01	0	0
27		.01	.14	.55	.51	4.8	.96	.35	.05	.01	0	0
28		.01	.16	.40	4.7	8.2	.95	.29	.05	.01	0	0
29		.01	.16	.36	------	10	1.0	.22	.05	.01	.01	0
30		.01	.15	.41	------	6.4	1.4	.19	.05	.01	.01	0
31		------	.16	.43	------	4.7	------	.22	------	.01	0	------
TOTAL	0	4.56	15.20	29.03	56.32	268.29	55.01	16.43	4.96	.77	.11	.02
MEAN	0	.15	.49	.94	2.01	8.65	1.83	.53	.17	.025	.004	.0007
MAX	0	3.0	3.0	8.0	15	27	4.0	1.4	.60	.04	.01	.01
MIN	0	0	.01	.16	.33	.99	.95	.19	.05	.01	0	0
AC-FT	0	9.0	30	58	112	532	109	33	9.8	1.5	.2	.04

CAL YR 1972 TOTAL 50.74 MEAN .14 MAX 3.0 MIN 0 AC-FT 101
WTR YR 1973 TOTAL 450.70 MEAN 1.23 MAX 27 MIN 0 AC-FT 894

PEAK DISCHARGE (BASE, 30 CFS)

DATE	TIME	G.H.	DISCHARGE	DATE	TIME	G.H.	DISCHARGE
2-13	0500	2.46	37	3-13	2245	2.79	80
3-8	1645	2.77	77	3-22	0415	2.59	51
3-11	1900	2.40	32				

11028500 SANTA MARIA CREEK NEAR RAMONA, CALIF.

LOCATION.--Lat 33°03'08", long 116°56'41", in SE¼SE¼SE¼ sec.11, T.13 S., R.1 W., San Diego County, on left bank 3.8 miles northwest of Ramona, and 4.6 miles upstream from mouth.

DRAINAGE AREA.--57.6 sq mi.

PERIOD OF RECORD.--November 1912 to September 1920, October 1946 to current year.

GAGE.--Water-stage recorder. Concrete control since October 1946. Datum of gage is 1,294.44 ft above mean sea level. Prior to Oct. 1, 1946, at datum 1.78 ft lower.

AVERAGE DISCHARGE.--34 years (1913-20, 1946-73), 3.51 cfs (2,540 acre-ft per year).

EXTREMES.--Current year: Maximum discharge, 220 cfs Feb. 13 (gage height, 2.70 ft); no flow Oct. 1 to Nov. 14, June 19 to Sept. 30.
Period of record: Maximum discharge, 7,140 cfs Jan. 27, 1916 (gage height, 14.1 ft, from floodmarks, present datum), from rating curve extended above 600 cfs on basis of slope-area measurement of maximum flow; no flow for several months in each year.

REMARKS.--Records good. No regulation above station.

DISCHARGE, IN CUBIC FEET PER SECOND, WATER YEAR OCTOBER 1972 TO SEPTEMBER 1973

DAY	OCT	NOV	DEC	JAN	FEB	MAR	APR	MAY	JUN	JUL	AUG	SEP
1		0	.04	.01	.05	1.6	3.4	.27	.03			
2		0	.04	.01	.05	1.0	2.8	.36	.05			
3		0	.07	.01	.09	.77	2.5	.18	.02			
4		0	.11	.02	.19	.90	2.2	.09	.04			
5		0	2.9	.05	.13	1.3	1.9	.05	.04			
6		0	.28	.02	.19	1.5	1.8	.05	.02			
7		0	.26	.02	.18	18	1.9	.06	.02			
8		0	7.4	.02	.16	39	1.6	.03	.01			
9		0	19	.02	.13	41	1.2	.03	.02			
10		0	2.1	.05	.12	11	1.1	.02	.03			
11		0	.68	.03	31	40	1.1	.02	.04			
12		0	.26	.02	25	80	.97	.03	.02			
13		0	.13	.01	77	32	.93	1.2	.02			
14		0	.06	.01	11	91	.89	.71	.01			
15		3.8	.02	.01	4.2	19	.78	.22	.02			
16		32	.01	.02	4.4	9.3	.74	.08	.01			
17		20	.01	1.7	2.4	6.6	.67	.05	.01			
18		2.3	.01	.68	1.7	5.1	.69	.05	.01			
19		.24	.01	14	1.4	3.9	.67	.05	0			
20		.02	.01	1.8	1.1	40	.57	.05	0			
21		.01	.01	.67	1.1	28	.57	.04	0			
22		.01	.01	.34	1.1	47	.39	.04	0			
23		.01	.01	.17	.93	18	.23	.04	0			
24		.01	.01	.10	.82	8.5	.20	.04	0			
25		.01	.01	.08	.71	5.9	.18	.04	0			
26		.01	.01	.18	.62	5.4	.14	.04	0			
27		.01	.01	.10	.58	7.6	.13	.04	0			
28		.01	.01	.05	1.5	11	.13	.03	0			
29		.01	.02	.03	------	15	.16	.04	0			
30		.02	.02	.06	------	7.2	.28	.02	0			
31		------	.03	.07	------	4.3	------	.02	------			------
TOTAL	0	58.47	33.95	20.36	167.85	600.87	30.82	3.99	.42	0	0	0
MEAN	0	1.95	1.08	.66	5.99	19.4	1.03	.13	.014	0	0	0
MAX	0	32	19	14	77	91	3.4	1.2	.05	0	0	0
MIN	0	0	.01	.01	.05	.77	.13	.02	0	0	0	0
AC-FT	0	116	67	40	333	1,190	61	7.9	.8	0	0	0

CAL YR 1972 TOTAL 92.40 MEAN .25 MAX 32 MIN 0 AC-FT 183
WTR YR 1973 TOTAL 916.33 MEAN 2.51 MAX 91 MIN 0 AC-FT 1,820

PEAK DISCHARGE (BASE, 20 CFS)

DATE	TIME	G.H.	DISCHARGE	DATE	TIME	G.H.	DISCHARGE
11-16	1915	2.43	148	3-11	2030	2.49	163
12-8	2115	1.88	41	3-14	0215	2.59	188
1-19	0900	1.75	26	3-20	1730	2.20	97
2-13	0500	2.70	220	3-22	1045	2.15	86
3-8	2015	2.40	140				

11030020 LAKE HODGES NEAR ESCONDIDO CALIF.

LOCATION.--Lat 33°02'41", long 117°07'39", in SE¼SE¼NW¼ sec.18, T.13 S., R.2 W., San Diego County, on face near left bank of Hodges Dam on San Dieguito River, and 6.4 miles southwest of Escondido.

DRAINAGE AREA.--303 sq mi.

PERIOD OF RECORD.--October 1945 to September 1968 published with San EDieguito River at Lake Hodges (sta 11030000). October 1972 to September 1973. Records of monthend gage heights February 1919 to September 1945, in files of San Diego County Department of Sanitation and Flood Control.

GAGE.--Water-stage recorder. Datum of gage is 200 ft above mean sea level; gage readings have been reduced to elevations above mean sea level. Prior to Oct. 1, 1972, nonrecording gage at site 800 ft upstream on right bank at same datum.

EXTREMES.--Current year: Maximum contents observed, 3,860 acre-ft Apr. 2 (elevation, 268.70 ft); minimum, 378 acre-ft Nov. 7 (elevation, 244.55 ft).
Period of record (1945-68, 1972-73): Maximum contents, 37,930 acre-ft Apr. 1, 1946 (elevation, 315.30 ft); minimum, 114 acre-ft Oct. 31, 1965 (elevation, 235.80 ft).

REMARKS.--Reservoir is formed by multiple arch reinforced concrete dam, constructed in 1917-19. Storage began in February 1919. Capacity table based on a 1948 survey; table dated Sept. 18, 1951. Capacity of reservoir at spillway level (elevation, 315.0 ft), 33,550 acre-ft. Dead storage below lowest outlet at elevation 254.0 ft, 1,160 acre-ft, included in these records. Reservoir can be pumped to (elevation, 240.0 ft) 207 acre-ft. Water drawn from Lake Hodges passes through a conduit to San Dieguito re-regulating reservoir, from which it is released as required for municipal use. Flow regulated since July 1954 by Sutherland Reservoir (see sta 11024000). Diversions for irrigation above Lake Hodges.

COOPERATION.--Gage heights furnished by San Diego County Department of Sanitation and Flood Control.

MONTHEND ELEVATION AND CONTENTS, WATER YEAR OCTOBER 1972 TO SEPTEMBER 1973

Date	Elevation (feet)a	Contents (acre-feet)	Change in contents (acre-feet)
Sept. 30.....	244.85	393	--
Oct. 31.....	244.65	383	-10
Nov. 30.....	250.85	822	+439
Dec. 31.....	254.55	1,220	+398
CAL YR 1972....	--	--	--
Jan. 31.....	259.05	1,870	+650
Feb. 28.....	262.80	2,560	+690
Mar. 31.....	268.65	3,850	+1,290
Apr. 30.....	264.40	2,880	-970
May 31.....	261.90	2,390	-490
June 30.....	258.40	1,770	-620
July 31.....	257.90	1,690	-80
Aug. 31.....	256.80	1,520	-170
Sept. 30.....	254.60	1,230	-290
WTR YR 1973....	--	--	+837

a Elevation at 0800.

11030700 LAKE WOHLFORD NEAR ESCONDIDO, CALIF.

LOCATION.--Lat 33°10'00", long 117°00'14", in NW¼NE¼ sec.5, T.12 S., R.1 W., San Diego County, on face of Lake Wohlford Dam, 330 ft left of spillway, 3.9 miles southeast of Valley Center Post Office, and 5.7 miles northeast of Escondido.

DRAINAGE AREA.--7.96 sq mi.

PERIOD OF RECORD.--October 1972 to September 1973. October 1933 to September 1972 in files of San Diego County Department of Sanitation and Flood Control.

GAGE.--Water-stage recorder. Datum of gage is 1,400 ft above mean sea level (levels by city of Escondido Engineering Department); gage readings have been reduced to elevation above mean sea level.

EXTREMES.--Current year: Maximum contents observed, 5,740 acre-ft Apr. 15 (elevation, 1,474.3 ft); minimum, 1,970 acre-ft Dec. 31 (elevation, 1,450.6 ft).
Period of record: Maximum contents, 6,940 acre-ft Apr. 30 to May 10, 1952 (elevation, 1,480 ft); minimum, 809 acre-ft Dec. 1, 1953 (elevation, 1,447.5 ft).

REMARKS.--Reservoir is formed by earthfill dam riprapped upstream and downstream, with concrete spillway anchored to natural rock. Dam was completed in 1932. Capacity table dated March 1955. Capacity at spillway level (elevation, 1,480.00 ft), 6,940 acre-ft. Dead storage below lowest outlet (elevation, 1,420.0 ft), 131 acre-ft. Reservoir storage includes supplemental water diverted from the San Luis Rey River via Escondido Mutual Water Co.'s canal to Lake Wohlford Reservoir. Stored water is released for municipal use by Vista Irrigation District and city of Escondido.

COOPERATION.--Gage heights furnished by San Diego County Department of Sanitation and Flood Control.

MONTHEND ELEVATION AND CONTENTS, WATER YEAR OCTOBER 1972 TO SEPTEMBER 1973

Date	Elevation (feet)a	Contents (acre-feet)	Change in contents (acre-feet)
Sept. 30.....	1,460.5	3,290	--
Oct. 31.....	1,453.9	2,370	-920
Nov. 30.....	1,453.2	2,280	-90
Dec. 31.....	1,450.6	1,970	-310
CAL YR 1972....	--	--	--
Jan. 31.....	1,460.2	3,250	+1,280
Feb. 28.....	1,464.7	3,970	+720
Mar. 31.....	1,473.3	5,540	+1,570
Apr. 30.....	1,471.9	5,260	-280
May 31.....	1,470.6	5,020	-240
June 30.....	1,466.3	4,240	-780
July 31.....	1,464.0	3,850	-390
Aug. 31.....	1,464.5	3,390	+80
Sept. 30.....	1,464.6	3,950	+20
WTR YR 1973....	--	--	+660

a Elevation at 0800.

11031500 AGUA CALIENTE CREEK NEAR WARNER SPRINGS, CALIF.

LOCATION.--Lat 33°17'19", long 116°39'11", in San Jose del Valle Grant, San Diego County, on downstream end of right pier of bridge on State Highway 79, 1.2 miles upstream from Canada Verde Creek, and 1.2 miles northwest of Warner Springs.

DRAINAGE AREA.--19.0 sq mi.

PERIOD OF RECORD.--February 1961 to current year.

GAGE.--Water-stage recorder. Altitude of gage is 2,950 ft (from topographic map). Prior to Jan. 29, 1966, at site 120 ft upstream at same datum, used as supplementary gage since Dec. 12, 1968.

AVERAGE DISCHARGE.--12 years, 1.18 cfs (855 acre-ft per year).

EXTREMES.--Current year: Maximum discharge, 41 cfs Mar. 11 (gage height, 2.73 ft); no flow most of year. Period of record: Maximum discharge, 1,200 cfs Dec. 6, 1966 (gage height, 5.18 ft), from rating curve extended above 240 cfs; no flow for much of each year.

REMARKS.--Records good. No regulation or diversion above station.

DISCHARGE, IN CUBIC FEET PER SECOND, WATER YEAR OCTOBER 1972 TO SEPTEMBER 1973

DAY	OCT	NOV	DEC	JAN	FEB	MAR	APR	MAY	JUN	JUL	AUG	SEP
1					0	1.4	4.5	.34	.05	.02		
2					0	.57	3.6	.21	.05	.01		
3					0	.21	2.7	.17	.05	0		
4					0	.17	2.4	.17	.05	0		
5					0	.14	2.1	.17	.05	0		
6					0	.90	1.8	.25	.05	0		
7					0	19	1.6	.25	.05	0		
8					0	14	1.4	.21	.05	0		
9					0	16	1.4	.17	.05	0		
10					0	10	1.2	.14	.05	0		
11					5.8	18	1.1	.14	.04	0		
12					18	21	.88	.11	.04	0		
13					23	18	.88	.11	.04	0		
14					12	14	.88	.09	.04	0		
15					6.7	9.0	.88	.09	.04	0		
16					4.0	6.4	.80	.09	.04	0		
17					2.6	4.7	.72	.09	.04	0		
18					1.8	4.0	.72	.09	.04	0		
19					1.1	3.4	.72	.07	.04	0		
20					.17	5.0	.72	.07	.04	0		
21					.57	5.2	.64	.07	.04	0		
22					.21	9.3	.51	.06	.04	0		
23					.09	7.3	.51	.06	.04	0		
24					.01	5.8	.45	.06	.03	0		
25					0	4.5	.39	.06	.03	0		
26					0	4.3	.29	.06	.03	0		
27					0	5.8	.25	.06	.03	0		
28					.95	8.6	.25	.06	.03	0		
29					------	8.2	.25	.06	.02	0		
30					------	6.1	.34	.06	.02	0		
31		------			------	5.2	------	.06	------	0		------
TOTAL	0	0	0	0	77.00	236.19	34.88	3.70	1.21	.03	0	0
MEAN	0	0	0	0	2.75	7.62	1.16	.12	.040	.001	0	0
MAX	0	0	0	0	23	21	4.5	.34	.05	.02	0	0
MIN	0	0	0	0	0	.14	.25	.06	.02	0	0	0
AC-FT	0	0	0	0	153	468	69	7.3	2.4	.06	0	0

CAL YR 1972 TOTAL 1.22 MEAN .003 MAX .7 MIN 0 AC-FT 2
WTR YR 1973 TOTAL 353.01 MEAN .97 MAX 23 MIN 0 AC-FT 700

PEAK DISCHARGE (BASE, 50 CFS).--No peak above base.

11033000 WEST FORK SAN LUIS REY RIVER NEAR WARNER SPRINGS, CALIF.

LOCATION.--Lat 33°17'48", long 116°45'32", in San Jose del Valle Grant, San Diego County, on left bank 0.2 mile upstream from Fink Road, 2.6 miles upstream from mouth, and 7.5 miles west of Warner Springs.

DRAINAGE AREA.--25.5 sq mi.

PERIOD OF RECORD.--January 1913 to November 1915, October 1956 to current year. Low-flow records not equivalent prior to Nov. 5, 1971, due to undetermined amount of underflow between sites.

GAGE.--Water-stage recorder. Altitude of gage is 2,800 ft (from topographic map). Prior to Oct. 1, 1956, at different datum. Prior to Nov. 5, 1971, at site 500 ft downstream at same datum.

AVERAGE DISCHARGE.--18 years (1913-15, 1957-73), 7.49 cfs (5,430 acre-ft per year).

EXTREMES.--Current year: Maximum discharge, 478 cfs Feb. 11 (gage height, 11.58 ft); no flow many days. Period of record: Maximum discharge, 4,200 cfs Dec. 6, 1966 (gage height, 11.87 ft), from rating curve extended above 250 cfs on basis of slope-area measurement of maximum flow; no flow at times in most years.

REMARKS.--Records good. No regulation or diversion above station.

DISCHARGE, IN CUBIC FEET PER SECOND, WATER YEAR OCTOBER 1972 TO SEPTEMBER 1973

DAY	OCT	NOV	DEC	JAN	FEB	MAR	APR	MAY	JUN	JUL	AUG	SEP
1		0	0	.53	2.9	17	31	9.7	2.1	.38	.01	
2		0	0	.53	2.6	12	27	9.3	2.1	.33	.01	
3		0	0	.53	2.5	10	24	8.4	1.9	.27	.03	
4		0	9.2	.80	5.0	15	22	8.0	1.6	.24	.04	
5		0	9.4	1.1	4.2	14	19	8.6	1.3	.19	.03	
6		0	4.4	.80	5.1	28	18	9.3	1.1	.17	.03	
7		0	4.2	.65	5.3	94	17	8.4	.94	.14	.03	
8		0	5.1	.65	4.4	66	16	7.6	.86	.14	.02	
9		0	5.1	1.2	3.7	57	15	7.6	.84	.11	.02	
10		0	2.6	6.2	3.3	38	15	7.4	.84	.10	.02	
11		0	1.6	3.3	195	94	14	6.9	.88	.08	.02	
12		0	1.2	2.1	131	77	14	6.9	.91	.08	.02	
13		0	.96	1.7	117	88	12	6.5	.89	.07	.03	
14		0	.88	1.5	39	90	12	6.5	.93	.07	.02	
15		0	.65	1.5	30	62	12	6.5	1.0	.06	.02	
16		0	.59	1.7	21	51	12	6.1	1.0	.06	.01	
17		.36	.59	31	16	44	12	5.9	.97	.06	.01	
18		.10	.59	6.9	14	37	11	5.8	.90	.06	.01	
19		0	.88	57	12	31	11	5.7	.79	.05	.01	
20		0	1.5	12	11	52	11	5.6	.71	.05	.01	
21		0	1.6	7.2	11	48	11	5.1	.65	.05	.01	
22		0	1.2	5.5	11	123	11	5.1	.65	.05	.01	
23		0	1.2	4.4	9.9	56	11	4.8	.64	.04	0	
24		0	.96	4.0	9.3	45	9.9	4.6	.59	.04	0	
25		0	.80	3.5	8.6	40	9.9	4.3	.53	.03	.01	
26		0	.72	4.4	7.9	41	9.5	3.9	.50	.03	.02	
27		0	.65	3.7	7.6	57	9.4	3.5	.47	.02	.02	
28		0	.65	3.1	40	64	9.4	3.1	.43	.02	.02	
29		0	.72	3.1	------	54	8.5	2.5	.41	.01	.01	
30		0	.65	3.1	------	40	9.4	2.2	.41	.02	.01	
31		------	.59	3.1	------	35	------	2.0	------	.01	0	------
TOTAL	0	.46	59.18	176.79	730.3	1,580	424.0	187.8	27.84	3.03	.51	0
MEAN	0	.015	1.91	5.70	26.1	51.0	14.1	6.06	.93	.098	.017	0
MAX	0	.36	9.4	57	195	123	31	9.7	2.1	.38	.04	0
MIN	0	0	0	.53	2.5	10	8.5	2.0	.41	.01	0	0
AC-FT	0	.9	117	351	1,450	3,130	841	373	55	6.0	1.0	0

CAL YR 1972 TOTAL 127.35 MEAN .35 MAX 9.4 MIN 0 AC-FT 253
WTR YR 1973 TOTAL 3,189.91 MEAN 8.74 MAX 195 MIN 0 AC-FT 6,330

PEAK DISCHARGE (BASE, 100 CFS)

DATE	TIME	G.H.	DISCHARGE	DATE	TIME	G.H.	DISCHARGE
12-26	0015	10.74	106	3-7	0230	10.99	181
1-17	0130	10.75	108	3-8	1545	10.84	132
1-19	0500	10.85	135	3-11	1630	11.11	229
2-11	1700	11.58	478	3-13	2045	10.91	153
2-13	0445	11.11	229	3-22	0415	11.11	229

11037700 PAUMA CREEK NEAR PAUMA VALLEY, CALIF.

LOCATION.--Lat 33°20'10", long 116°58'25", in Pauma Grant, San Diego County, on right bank 0.3 mile downstream from unnamed tributary, and 2.2 miles north of Pauma Valley.

DRAINAGE AREA.--11.0 sq mi.

PERIOD OF RECORD.--October 1964 to current year.

GAGE.--Water-stage recorder; water-stage recorder and Parshall flume on diversion. Altitude of gage is 1,240 ft (from topographic map).

AVERAGE DISCHARGE (Creek only).--9 years, 3.66 cfs (2,650 acre-ft per year).
(Combined creek and diversion).--9 years, 4.39 cfs (3,180 acre-ft per year).

EXTREMES (Creek only).--Current year: Maximum discharge, 65 cfs Feb. 11 (gage height, 3.20 ft); no flow Oct. 1-20, July 11-18, Aug. 17 to Sept. 30.
Period of record: Maximum discharge, 2,100 cfs Dec. 6, 1966 (gage height, 8.60 ft), from rating curve extended above 110 cfs on basis of slope-area measurement at gage height 7.26 ft; no flow much of each year.
(Combined flow).--Current year: Maximum discharge, 65 cfs Feb. 11; minimum daily, 0.11 cfs Aug. 20.
Period of record: Maximum discharge, 2,100 cfs Dec. 6, 1966; minimum daily, 0.04 cfs July 29 to Aug. 2, 1972.

REMARKS.--Records good. No regulation above station. Pauma Valley Water Co. diverts from a site 0.2 mile upstream. For records of combined discharge of Pauma Creek and Pauma Valley Water Co.'s diversion, see following page.

DISCHARGE, IN CUBIC FEET PER SECOND, WATER YEAR OCTOBER 1972 TO SEPTEMBER 1973

DAY	OCT	NOV	DEC	JAN	FEB	MAR	APR	MAY	JUN	JUL	AUG	SEP
1	0	.02	.05	.72	1.7	7.6	16	4.4	.74	.04	.04	
2	0	.02	.04	.68	1.6	5.1	15	3.3	.66	.03	.04	
3	0	.03	.04	.72	1.4	4.3	13	2.9	.58	.04	.04	
4	0	.03	4.9	.98	2.2	6.9	12	2.8	.54	.02	.04	
5	0	.03	5.3	1.1	2.1	6.0	11	3.4	.48	.02	.04	
6	0	.03	1.6	.87	2.1	9.0	11	4.8	.44	.02	.04	
7	0	.03	1.5	.77	2.6	31	10	3.3	.40	.02	.04	
8	0	.03	2.4	.68	2.2	24	9.5	2.8	.36	.02	.04	
9	0	.03	2.3	.87	1.8	21	8.2	2.6	.33	.01	.04	
10	0	.03	1.4	2.0	1.6	19	7.8	2.4	.30	.01	.03	
11	0	.18	1.1	1.4	32	34	7.6	2.3	.27	0	.03	
12	0	.49	1.0	1.1	30	30	6.7	2.2	.24	0	.02	
13	0	.31	.92	.98	24	26	6.2	2.1	.22	0	.02	
14	0	.43	.87	.92	16	23	6.0	2.1	.20	0	.02	
15	0	.77	.82	.87	12	21	5.8	1.9	.16	0	.01	
16	0	1.9	.77	1.2	9.5	23	5.6	1.7	.14	0	.01	
17	0	2.9	.77	9.4	7.3	20	5.5	1.6	.10	0	0	
18	0	1.1	.68	3.1	6.2	18	5.3	1.6	.08	0	0	
19	0	.64	.60	14	5.1	15	5.1	1.5	.08	.01	0	
20	0	.49	.60	6.0	4.3	19	4.8	1.4	.07	.05	0	
21	.18	.37	.60	3.8	3.8	17	4.3	1.5	.06	.06	0	
22	.07	.31	.64	3.2	3.6	31	4.0	1.4	.05	.06	0	
23	.04	.27	.68	2.7	3.2	21	3.8	1.3	.05	.07	0	
24	.03	.27	.72	2.5	2.9	21	3.7	1.2	.07	.07	0	
25	.02	.27	.82	2.5	2.8	20	3.4	1.1	.07	.07	0	
26	.02	.25	.72	2.7	2.5	19	3.3	1.0	.08	.06	0	
27	.02	.23	.68	2.4	2.4	28	3.1	.92	.11	.05	0	
28	.02	.15	.72	2.1	17	29	3.1	.84	.10	.05	0	
29	.02	.07	.77	1.9	------	25	3.1	.78	.08	.06	0	
30	.02	.06	.82	1.9	------	20	5.1	.72	.06	.06	0	
31	.02	------	.77	1.9	------	17	------	.80	------	.05	0	------
TOTAL	.46	11.74	35.60	75.96	203.9	610.9	209.0	62.66	7.12	.95	.50	0
MEAN	.015	.39	1.15	2.45	7.28	19.7	6.97	2.02	.24	.031	.016	0
MAX	.18	2.9	5.3	14	32	34	16	4.8	.74	.07	.04	0
MIN	0	.02	.04	.68	1.4	4.3	3.1	.72	.05	0	0	0
AC-FT	.9	23	71	151	404	1,210	415	124	14	1.9	1.0	0

CAL YR 1972 TOTAL 79.24 MEAN .22 MAX 5.3 MIN 0 AC-FT 157
WTR YR 1973 TOTAL 1,218.79 MEAN 3.34 MAX 34 MIN 0 AC-FT 2,420

PEAK DISCHARGE (BASE, 50 CFS)

DATE	TIME	G.H.	DISCHARGE	DATE	TIME	G.H.	DISCHARGE
2-11	2100	3.20	65	3-11	1500	3.18	63
3-7	0300	3.12	58				

11037700 PAUMA CREEK NEAR PAUMA VALLEY, CALIF.--Continued

COMBINED DISCHARGE, IN CUBIC FEET PER SECOND, OF PAUMA CREEK AND PAUMA VALLEY WATER CO.'S DIVERSION NEAR PAUMA VALLEY, CALIF., WATER YEAR OCTOBER 1972 TO SEPTEMBER 1973

DAY	OCT	NOV	DEC	JAN	FEB	MAR	APR	MAY	JUN	JUL	AUG	SEP
1	.14	.22	.31	.89	2.3	7.7	16	5.4	1.8	.56	.19	.21
2	.16	.22	.30	.85	2.2	5.2	15	4.5	1.8	.51	.19	.20
3	.19	.23	.30	.88	2.0	4.4	13	4.2	1.7	.43	.19	.18
4	.19	.21	5.1	1.1	2.8	7.0	12	4.0	1.6	.38	.19	.20
5	.17	.21	5.5	1.2	2.7	6.1	11	4.6	1.6	.38	.21	.23
6	.15	.23	1.8	1.0	2.7	9.1	12	6.1	1.5	.42	.21	.20
7	.19	.38	1.6	.92	3.2	31	11	4.8	1.5	.44	.21	.17
8	.22	.53	2.6	.83	2.8	24	10	4.3	1.5	.45	.27	.17
9	.25	.45	2.4	1.0	2.4	21	9.2	4.1	1.4	.41	.25	.20
10	.30	.43	1.6	2.6	2.2	19	8.7	3.8	1.4	.38	.22	.26
11	.25	.43	1.2	2.0	32	34	8.5	3.7	1.4	.34	.23	.29
12	.22	.76	1.2	1.7	30	30	7.5	3.6	1.3	.32	.21	.26
13	.20	.54	1.1	1.6	24	26	7.0	3.5	1.3	.34	.20	.24
14	.19	.64	1.0	1.5	16	23	6.9	3.5	1.3	.34	.19	.24
15	.20	.94	.97	1.5	12	22	6.7	3.2	1.3	.32	.17	.22
16	.20	2.1	.93	1.8	9.6	24	6.5	2.9	1.2	.31	.17	.22
17	.22	3.1	.95	10	7.4	21	6.4	2.8	1.2	.27	.15	.20
18	.25	1.3	.96	3.7	6.3	19	6.2	2.8	1.2	.23	.15	.18
19	.33	.81	.98	15	5.2	16	6.1	2.7	1.1	.21	.13	.19
20	.45	.66	.98	6.6	4.4	19	5.8	2.6	.89	.23	.11	.20
21	.60	.54	.98	4.4	4.1	17	5.3	2.6	.77	.23	.15	.21
22	.42	.48	1.0	3.8	4.0	31	5.1	2.5	.64	.23	.16	.25
23	.34	.44	1.0	3.3	3.6	21	4.9	2.4	.60	.24	.16	.29
24	.30	.44	1.0	3.1	3.2	21	4.8	2.3	.60	.22	.17	.30
25	.28	.44	1.0	3.1	3.1	20	4.5	2.2	.57	.22	.19	.27
26	.27	.42	.91	3.3	2.8	20	4.4	2.1	.52	.21	.24	.22
27	.29	.40	.86	3.0	2.6	29	4.2	2.0	.46	.19	.27	.17
28	.28	.38	.90	2.7	17	29	4.2	1.9	.64	.19	.27	.14
29	.27	.36	.95	2.5	------	25	4.2	1.9	.67	.20	.23	.14
30	.24	.34	.99	2.5	------	20	6.2	1.8	.62	.21	.19	.15
31	.22	------	.94	2.5	------	17	------	1.9	------	.20	.21	------
TOTAL	7.98	18.63	42.31	90.87	212.6	618.5	233.3	100.7	34.08	9.61	6.08	6.40
MEAN	.26	.62	1.36	2.93	7.59	20.0	7.78	3.25	1.14	.31	.20	.21
MAX	.60	3.1	5.5	15	32	34	16	6.1	1.8	.56	.27	.30
MIN	.14	.21	.30	.83	2.0	4.4	4.2	1.8	.46	.19	.11	.14
AC-FT	16	37	84	180	422	1,230	463	200	68	19	12	13

CAL YR 1972 TOTAL 258.72 MEAN .71 MAX 5.5 MIN .04 AC-FT 513
WTR YR 1973 TOTAL 1,381.06 MEAN 3.78 MAX 34 MIN .11 AC-FT 2,740

PEAK DISCHARGE (BASE, 50 CFS).--Same as those listed on previous page.

11039100 SAN LUIS REY RIVER TRIBUTARY NEAR PALA, CALIF.

LOCATION.--Lat 33°21'45", long 117°02'55", in SW¼NW¼SW¼ sec.25, T.9 S., R.2 W., San Diego County, on upstream right bank at culvert on State Highway 76, 1.5 miles east of Pala.

DRAINAGE AREA.--1.01 sq mi.

PERIOD OF RECORD.--Water years 1962-65 (annual maximum), September 1965 to September 1973 (discontinued).

GAGE.--Water-stage recorder with rain-gage attachment and corrugated-pipe control. Altitude of gage is 520 ft (from topographic map). Dec. 8, 1961, to Sept. 20, 1965, crest-stage gage only at same site and datum.

AVERAGE DISCHARGE.--8 years (1965-73), 0.006 cfs (4.3 acre-ft per year).

EXTREMES.--Current year: Maximum discharge, 11 cfs Feb. 11 (gage height, 16.03 ft), from rating curve as explained below; no flow most of year.
Period of record: Maximum discharge, 25 cfs Nov. 22, 1965 (gage height, 16.77 ft), from rating curve defined by computation of flow through culvert at gage heights 15.12, 15.58, 15.70, and 16.38 ft; no flow most of each year.

REMARKS.--Records fair. No regulation or diversion above station.

DISCHARGE, IN CUBIC FEET PER SECOND, WATER YEAR OCTOBER 1972 TO SEPTEMBER 1973

DAY	OCT	NOV	DEC	JAN	FEB	MAR	APR	MAY	JUN	JUL	AUG	SEP
1		0		0	0	0						
2		0		0	0	0						
3		0		0	0	0						
4		0		0	0	0						
5		0		0	0	0						
6		0		0	0	0						
7		0		0	0	.02						
8		0		0	0	.25						
9		0		0	0	0						
10		0		0	0	0						
11		0		0	.39	0						
12		0		0	0	0						
13		0		0	.02	0						
14		.10		0	0	0						
15		0		0	0	0						
16		.30		.05	0	0						
17		0		0	0	0						
18		0		.11	0	0						
19		0		.03	0	0						
20		0		0	0	.03						
21		0		0	0	0						
22		0		0	0	0						
23		0		0	0	0						
24		0		0	0	0						
25		0		0	0	0						
26		0		0	0	0						
27		0		0	0	0						
28		0		0	0	.05						
29		0		0	------	0						
30		0		0	------	0						
31		------		0	------	0	------		------			------
TOTAL	0	.40	0	.19	.41	.35	0	0	0	0	0	0
MEAN	0	.013	0	.006	.015	.011	0	0	0	0	0	0
MAX	0	.30	0	.11	.39	.25	0	0	0	0	0	0
MIN	0	0	0	0	0	0	0	0	0	0	0	0
AC-FT	0	.8	0	.4	.8	.7	0	0	0	0	0	0
(a)	.7	3.1	2.2	3.0	3.2	3.9	.2	0	0	0	0	0

CAL YR 1972 TOTAL 0.40 MEAN .0010 MAX .30 MIN 0 AC-FT .8
WTR YR 1973 TOTAL 1.35 MEAN .0040 MAX .39 MIN 0 AC-FT 2.7

a Precipitation, in inches.

11040000 SAN LUIS REY RIVER AT MONSERATE NARROWS, NEAR PALA, CALIF.

LOCATION.--Lat 33°20'14", long 117°08'07", in SW¼SE¼NW¼ sec.6, T.10 S., R.2 W., San Diego County, on left bank 4 miles southwest of Pala, and 6 miles northeast of Bonsall.

DRAINAGE AREA.--373 sq mi.

PERIOD OF RECORD.--December 1935 to March 1938 (fragmentary), April 1938 to November 1941, October 1946 to current year.

GAGE.--Water-stage recorder. Datum of gage is 270.82 ft above mean sea level (levels by State of California). Prior to October 1946, at same site at different datum. Oct. 22, 1946, to Nov. 30, 1954, at datum 1.0 ft higher.

AVERAGE DISCHARGE.--30 years (1938-41, 1946-73), 6.77 cfs (4,900 acre-ft per year).

EXTREMES.--Current year: Maximum discharge, 38 cfs Mar. 12 (gage height, 4.45 ft); no flow most of year. Period of record: Maximum gage height, 8.7 ft Feb. 7, 1937, datum then in use (discharge not determined); maximum discharge known, 7,000 cfs Dec. 6, 1966 (gage height, 6.70 ft); no flow at times in most years.

REMARKS.--Records good. Flow regulated by Lake Henshaw (capacity, 194,300 acre-ft). Several diversions above station.

DISCHARGE, IN CUBIC FEET PER SECOND, WATER YEAR OCTOBER 1972 TO SEPTEMBER 1973

DAY	OCT	NOV	DEC	JAN	FEB	MAR	APR	MAY	JUN	JUL	AUG	SEP
1					0	0	3.4	1.4	.13			
2					0	0	3.1	1.1	0			
3					0	0	2.7	.92	0			
4					0	0	2.5	.92	.06			
5					0	0	2.5	1.0	0			
6					0	0	2.4	1.0	0			
7					0	0	2.4	.85	0			
8					0	0	1.9	.78	0			
9					0	18	1.9	.85	0			
10					0	6.9	2.1	.78	0			
11					0	11	2.0	.78	0			
12					1.8	29	2.0	.78	0			
13					5.7	13	2.0	.78	0			
14					1.6	9.6	2.0	.78	0			
15					0	6.7	1.6	.78	0			
16					0	6.0	1.6	.78	0			
17					0	5.3	1.6	.78	0			
18					0	4.9	1.6	.78	0			
19					0	4.7	1.8	.78	0			
20					0	10	1.6	.78	0			
21					0	12	1.4	.85	0			
22					0	18	1.3	.85	0			
23					0	12	1.2	.85	0			
24					0	6.2	1.3	.78	0			
25					0	4.9	1.3	.78	0			
26					0	5.1	1.1	.78	0			
27					0	5.1	1.1	.78	0			
28					0	9.1	1.2	.78	0			
29					------	13	1.1	.71	0			
30					------	7.1	1.3	.64	0			
31		------			------	5.1	------	.53	------			------
TOTAL	0	0	0	0	9.1	222.7	55.0	25.73	.19	0	0	0
MEAN	0	0	0	0	.33	7.18	1.83	.83	.006	0	0	0
MAX	0	0	0	0	5.7	29	3.4	1.4	.13	0	0	0
MIN	0	0	0	0	0	0	1.1	.53	0	0	0	0
AC-FT	0	0	0	0	18	442	109	51	.4	0	0	0

CAL YR 1972 TOTAL 0.00 MEAN .000 MAX .0 MIN 0 AC-FT 0
WTR YR 1973 TOTAL 312.72 MEAN .86 MAX 29 MIN 0 AC-FT 620

11040200 KEYS CREEK TRIBUTARY AT VALLEY CENTER, CALIF.

LOCATION.--Lat 33°13'45", long 117°02'09", in NW¼SE¼SE¼ sec.12, T.11 S., R.2 W., San Diego County, on left bank 140 ft upstream from bridge on Valley Center Road, 0.3 mile downstream from unnamed tributary, and 0.8 mile north of Valley Center.

DRAINAGE AREA.--7.65 sq mi.

PERIOD OF RECORD.--April 1970 to current year.

GAGE.--Water-stage recorder. Datum of gage is 1,279.99 ft above mean sea level (San Diego County Special District Services bench mark).

EXTREMES.--Current year: Maximum discharge, 188 cfs Mar. 8 (gage height, 3.39 ft); no flow many days.
Period of record: Maximum discharge, 188 cfs Mar. 8, 1973 (gage height, 3.39 ft); no flow for part of each year.
Flood of Jan. 25, 1969, 990 cfs, by San Diego County Special District Services.

REMARKS.--Records good. No regulation above station. Some pumping for irrigation above station.

DISCHARGE, IN CUBIC FEET PER SECOND, WATER YEAR OCTOBER 1972 TO SEPTEMBER 1973

DAY	OCT	NOV	DEC	JAN	FEB	MAR	APR	MAY	JUN	JUL	AUG	SEP
1	0	.01	.05	.05	.12	.27	.64	.17	.12	.02		0
2	0	.01	.05	.05	.12	.26	.63	.16	.12	.01		0
3	0	.01	.05	.06	.13	.26	.62	.14	.09	.01		0
4	0	.01	1.1	.06	.12	.31	.56	.13	.07	0		0
5	0	.01	.19	.06	.10	2.3	.53	.15	.07	0		0
6	0	.01	.07	.06	.12	2.4	.52	.15	.06	.01		0
7	0	.01	.07	.06	.29	6.7	.51	.17	.06	.01		0
8	0	.03	1.2	.06	.17	32	.50	.17	.06	.01		0
9	0	.01	.22	.08	.12	3.9	.46	.12	.06	.01		0
10	0	.02	.08	.23	.12	1.1	.43	.12	.05	.01		.01
11	0	.04	.08	.06	14	28	.30	.12	.05	0		.02
12	0	.03	.08	.06	7.1	9.1	.28	.14	.06	0		.02
13	0	.03	.08	.06	17	2.5	.28	.16	.05	.01		.02
14	0	.05	.07	.06	.56	1.9	.28	.15	.05	.01		.01
15	0	.04	.07	.06	.69	1.5	.37	.13	.05	.01		.01
16	0	4.5	.07	3.1	.32	1.3	.41	.12	.05	.01		.01
17	0	.22	.07	1.7	.29	1.2	.33	.15	.05	.01		.01
18	.02	.07	.07	2.2	.28	1.1	.28	.16	.04	0		.01
19	.03	.06	.07	5.6	.26	1.0	.25	.18	.04	0		0
20	.03	.06	.07	.26	.26	13	.29	.21	.03	0		.01
21	.02	.06	.07	.18	.26	2.1	.27	.21	.03	.01		.01
22	.02	.05	.07	.16	.23	15	.29	.21	.03	.01		.02
23	0	.05	.07	.15	.23	1.7	.19	.22	.03	0		.02
24	0	.05	.07	.13	.23	1.0	.15	.20	.03	0		.02
25	0	.05	.06	.13	.23	1.0	.15	.18	.03	0		.02
26	0	.05	.06	.13	.23	1.2	.15	.14	.03	0		0
27	.01	.05	.05	.12	.23	1.4	.15	.13	.04	0		0
28	.01	.05	.05	.12	3.0	2.0	.15	.13	.02	0		0
29	.01	.05	.05	.12	------	1.4	.16	.12	.02	0		0
30	.01	.05	.05	.12	------	1.0	.20	.12	.02	0		0
31	0	------	.05	.12	------	.65	------	.12	------	0		------
TOTAL	.16	5.74	4.46	15.41	46.81	138.55	10.33	4.78	1.51	.16	0	.22
MEAN	.005	.19	.14	.50	1.67	4.47	.34	.15	.050	.005	0	.007
MAX	.03	4.5	1.2	5.6	17	32	.64	.22	.12	.02	0	.02
MIN	0	.01	.05	.05	.10	.26	.15	.12	.02	0	0	0
AC-FT	.3	11	8.8	31	93	275	20	9.5	3.0	.3	0	.4

CAL YR 1972 TOTAL 19.91 MEAN .054 MAX 4.5 MIN 0 AC-FT 39
WTR YR 1973 TOTAL 228.13 MEAN .63 MAX 32 MIN 0 AC-FT 452

11041000 SAN LUIS REY RIVER NEAR BONSALL, CALIF.

LOCATION.--Lat 33°15'13", long 117°14'48", in SW¼NE¼NE¼ sec.1, T.11 S., R.4 W., San Diego County, on left bank 0.7 mile downstream from bridge on State Highway 76, and 2.8 miles southwest of Bonsall.

DRAINAGE AREA.--513 sq mi.

PERIOD OF RECORD.--July 1916 to September 1918 (gage heights and discharge measurements only), October 1929 to current year.

GAGE.--Water-stage recorder. Datum of gage is 108.10 ft above mean sea level. See WSP 1315-B, 1735 for history of changes prior to Sept. 16, 1946.

AVERAGE DISCHARGE.--44 years (1929-73), 17.7 cfs (12,820 acre-ft per year).

EXTREMES.--Current year: Maximum discharge, 264 cfs Feb. 11 (gage height, 8.46 ft); minimum daily, 1.0 cfs July 29.
Period of record: Maximum discharge, 18,100 cfs Mar. 3, 1938 (gage height, 16.04 ft, present datum), from rating curve extended above 2,400 cfs; no flow for part of most years.

REMARKS.--Records good except those for period of no gage-height record, which are poor. Flow regulated by Lake Henshaw (capacity, 194,300 acre-ft). Several diversions above station.

DISCHARGE, IN CUBIC FEET PER SECOND, WATER YEAR OCTOBER 1972 TO SEPTEMBER 1973

DAY	OCT	NOV	DEC	JAN	FEB	MAR	APR	MAY	JUN	JUL	AUG	SEP
1	1.8	2.1	5.8	7.3	10	18	15	9.6	5.5	2.6	1.1	1.8
2	2.1	2.0	5.9	7.1	10	15	14	8.3	5.7	2.7	1.1	1.9
3	2.0	1.9	5.8	7.0	10	13	13	7.4	5.9	1.9	1.1	1.9
4	1.8	1.9	8.7	7.6	12	13	12	7.1	5.6	1.5	1.1	1.9
5	1.8	2.2	30	9.1	12	16	11	6.9	5.2	1.6	1.2	2.0
6	1.6	2.6	18	9.2	12	14	11	7.3	4.6	1.7	1.2	2.0
7	1.4	3.2	13	8.6	13	19	10	7.5	4.5	1.7	1.2	2.0
8	1.8	3.8	14	8.3	13	25	11	7.4	4.2	1.7	1.2	2.0
9	2.4	3.7	15	8.5	13	103	10	7.1	4.0	1.7	1.2	2.1
10	2.3	3.9	13	11	12	29	10	6.6	3.9	1.6	1.3	2.1
11	2.2	5.0	11	10	60	29	9.6	6.8	4.0	1.5	1.3	2.2
12	2.2	6.0	10	9.4	114	122	9.3	6.7	3.7	1.4	1.3	2.2
13	2.6	5.6	9.4	9.0	113	49	9.9	6.8	3.7	1.3	1.3	2.3
14	2.6	7.2	9.1	8.8	47	29	10	7.2	3.9	1.4	1.3	2.3
15	2.7	11	8.6	8.7	28	22	10	7.1	3.7	1.5	1.4	2.0
16	2.8	12	8.4	9.3	24	18	9.7	6.8	3.6	1.4	1.4	2.0
17	2.4	46	8.4	42	21	17	9.7	6.5	3.5	1.4	1.4	1.8
18	2.5	26	9.5	25	19	16	9.8	6.6	3.8	1.3	1.4	1.9
19	3.1	14	11	51	18	16	9.1	6.9	3.7	1.3	1.5	2.0
20	3.7	11	8.9	31	17	36	8.9	7.4	3.3	1.3	1.5	2.0
21	3.7	9.1	8.4	19	16	68	8.6	7.4	2.9	1.4	1.5	1.9
22	3.4	8.2	8.3	16	16	49	8.8	6.8	2.6	1.3	1.5	2.0
23	3.2	7.8	8.3	14	15	43	8.1	6.1	2.6	1.3	1.6	2.3
24	2.9	7.4	8.3	13	14	25	7.7	5.6	2.7	1.3	1.6	2.3
25	2.8	7.0	8.1	12	13	20	7.3	5.6	2.4	1.2	1.6	1.9
26	2.7	6.7	8.0	12	13	22	7.3	5.7	2.6	1.1	1.7	2.0
27	2.9	6.7	7.5	12	13	20	7.3	5.5	2.5	1.1	1.7	1.7
28	2.9	6.6	7.7	12	15	19	8.0	5.4	2.4	1.1	1.7	1.4
29	2.9	6.3	7.4	11	------	20	8.7	4.8	2.5	1.0	1.8	1.2
30	2.6	6.0	7.1	11	------	19	9.7	4.8	2.6	1.1	1.8	1.3
31	2.4	------	7.2	11	------	16	------	5.0	------	1.1	1.8	------
TOTAL	78.2	242.9	309.8	430.9	693	940	294.5	206.7	111.8	45.5	43.8	58.4
MEAN	2.52	8.10	9.99	13.9	24.8	30.3	9.82	6.67	3.73	1.47	1.41	1.95
MAX	3.7	46	30	51	114	122	15	9.6	5.9	2.7	1.8	2.3
MIN	1.4	1.9	5.8	7.0	10	13	7.3	4.8	2.4	1.0	1.1	1.2
AC-FT	155	482	614	855	1,370	1,860	584	410	222	90	87	116

CAL YR 1972 TOTAL 1,693.25 MEAN 4.63 MAX 46 MIN .25 AC-FT 3,360
WTR YR 1973 TOTAL 3,455.50 MEAN 9.47 MAX 122 MIN 1.0 AC-FT 6,850

NOTE.--No gage-height record Aug. 2 to Sept. 14.

11042000 SAN LUIS REY RIVER AT OCEANSIDE, CALIF.

LOCATION.--Lat 33°12'48", long 117°22'33", in SW¼SE¼SW¼ sec.14, T.11 S., R.5 W., San Diego County, on right bank 0.7 mile upstream from bridge on Interstate Highway 5, 1.1 miles upstream from mouth, and 1.2 miles north of Oceanside.

DRAINAGE AREA.--558 sq mi.

PERIOD OF RECORD.--April 1912 to September 1914 (published as "near Oceanside"), January 1916, October 1929 to January 1942, October 1946 to current year.

GAGE.--Water-stage recorder. Altitude of gage is 20 ft (from topographic map). April 1912 to September 1914, nonrecording gage at site 0.8 mile upstream at different datum. January 1916, nonrecording gage 0.2 mile downstream at different datum.

AVERAGE DISCHARGE.--41 years (1912-14, 1929-41, 1946-73), 14.8 cfs (10,720 acre-ft per year).

EXTREMES.--Current year: Maximum discharge, 155 cfs Mar. 12 (gage height, 7.66 ft); minimum daily, 4.4 cfs Oct. 8.
Period of record: Maximum discharge, 95,600 cfs Jan. 27, 1916, from hydrograph based on discharge measurements; no flow for several months in most years.

REMARKS.--Records good. Flow regulated by Lake Henshaw (capacity, 194,300 acre-ft). Several diversions for irrigation and domestic use above station. AVERAGE DISCHARGE represents flow to ocean during period of record regardless of upstream development. Records of suspended-sediment discharge for the current year are published in Part 2 of this report.

DISCHARGE, IN CUBIC FEET PER SECOND, WATER YEAR OCTOBER 1972 TO SEPTEMBER 1973

DAY	OCT	NOV	DEC	JAN	FEB	MAR	APR	MAY	JUN	JUL	AUG	SEP
1	4.6	5.7	7.1	6.6	8.2	22	28	9.3	6.6	5.4	5.1	5.8
2	4.6	5.9	7.2	6.6	8.1	24	27	9.0	6.5	5.3	5.2	5.9
3	4.7	6.1	7.1	6.7	7.8	22	26	9.0	6.0	5.3	5.2	5.9
4	4.9	6.1	7.4	7.1	7.8	21	24	8.6	5.9	5.2	5.2	5.8
5	4.6	5.9	8.7	7.4	7.6	22	22	7.8	6.0	5.2	5.0	5.8
6	4.6	5.7	9.0	7.4	8.0	24	21	7.2	6.1	5.2	5.1	5.8
7	4.6	5.5	8.8	7.2	8.2	27	19	7.0	6.1	5.2	5.1	5.9
8	4.4	5.8	8.7	7.2	8.6	30	19	7.2	6.1	5.1	5.2	5.9
9	4.5	6.1	8.7	7.2	8.7	44	18	7.4	5.9	5.4	5.3	5.5
10	4.6	6.1	8.4	7.6	8.7	96	18	7.4	5.8	5.5	5.4	5.4
11	4.6	6.6	8.0	7.8	9.7	62	18	7.4	5.6	5.4	5.3	6.1
12	4.8	6.7	7.4	7.8	41	100	17	7.1	5.8	5.4	5.3	8.1
13	4.9	6.5	7.4	7.8	113	132	16	7.0	5.9	5.6	5.3	7.4
14	4.9	7.1	7.5	7.6	126	93	15	6.8	6.0	6.2	5.3	6.7
15	4.9	8.8	7.5	7.6	91	64	16	7.0	5.8	5.4	5.4	6.2
16	4.7	9.5	7.5	8.2	62	42	16	7.1	5.5	5.3	5.5	6.0
17	4.9	11	7.5	9.3	39	35	15	7.2	5.5	5.4	5.5	6.0
18	5.5	11	7.2	11	44	32	16	7.2	5.4	5.3	6.5	6.0
19	6.0	10	7.0	21	30	31	15	7.1	5.5	5.3	7.0	5.9
20	6.1	9.0	7.1	23	29	37	14	7.6	5.6	5.3	6.3	5.9
21	6.0	8.4	7.1	27	25	59	13	6.7	5.5	5.3	6.6	5.9
22	5.7	8.1	7.1	19	22	88	12	6.8	5.3	5.2	6.2	6.0
23	5.4	8.1	7.1	15	22	79	12	6.8	5.2	5.1	6.1	5.9
24	5.4	8.1	7.0	13	21	67	12	6.8	5.0	5.1	5.8	5.9
25	5.5	7.8	6.7	12	19	42	12	6.8	5.1	5.3	5.6	6.0
26	5.5	7.4	6.6	11	21	38	11	6.8	5.3	5.3	5.6	5.9
27	5.1	6.8	6.6	10	22	35	10	6.8	5.5	5.3	5.6	5.8
28	5.8	6.6	7.0	9.5	24	34	9.7	6.8	5.6	5.0	5.6	5.8
29	5.8	6.6	7.1	8.8	------	32	9.5	6.8	5.5	5.0	5.6	5.6
30	5.7	7.0	7.0	8.7	------	31	9.5	6.6	5.6	5.0	5.8	5.6
31	5.5	------	6.8	8.2	------	31	------	6.5	------	5.0	5.6	------
TOTAL	158.8	220.0	231.3	324.3	842.4	1,496	490.7	225.6	171.2	164.0	173.3	180.4
MEAN	5.12	7.33	7.46	10.5	30.1	48.3	16.4	7.28	5.71	5.29	5.59	6.01
MAX	6.1	11	9.0	27	126	132	28	9.3	6.6	6.2	7.0	8.1
MIN	4.4	5.5	6.6	6.6	7.6	21	9.5	6.5	5.0	5.0	5.0	5.4
AC-FT	315	436	459	643	1,670	2,970	973	447	340	325	344	358

CAL YR 1972 TOTAL 2,039.6 MEAN 5.57 MAX 12 MIN 3.1 AC-FT 4,050
WTR YR 1973 TOTAL 4,678.0 MEAN 12.8 MAX 132 MIN 4.4 AC-FT 9,280

11042400 TEMECULA CREEK NEAR AGUANGA, CALIF.

LOCATION.--Lat 33°27'33", long 116°55'22", in NE¼SW¼SW¼ sec.19, T.8 S., R.1 E., Riverside County, on right bank 1.6 miles downstream from Long Canyon, and 3.5 miles northwest of Aguanga.

DRAINAGE AREA.--131 sq mi.

PERIOD OF RECORD.--August 1957 to current year.

GAGE.--Water-stage recorder. Altitude of gage is 1,590 ft (from topographic map).

AVERAGE DISCHARGE.--16 years, 4.55 cfs (3,290 acre-ft per year).

EXTREMES.--Current year: Maximum discharge, 172 cfs Feb. 11 (gage height, 2.97 ft); no flow many days.
Period of record: Maximum discharge, 3,540 cfs Apr. 3, 1958 (gage height, 6.57 ft), from rating curve extended above 1,200 cfs; no flow at times in each year.

REMARKS.--Records good. No regulation above station. Pumping for irrigation above station.

DISCHARGE, IN CUBIC FEET PER SECOND, WATER YEAR OCTOBER 1972 TO SEPTEMBER 1973

DAY	OCT	NOV	DEC	JAN	FEB	MAR	APR	MAY	JUN	JUL	AUG	SEP
1	.45	.54	1.4	1.3	2.9	9.4	13	4.1	1.6	.03	.02	0
2	.46	.60	1.5	1.4	2.6	7.9	12	3.6	2.0	.04	.03	0
3	.55	.70	.80	1.5	2.6	6.8	11	3.3	2.0	.04	.02	.04
4	.60	.72	1.9	2.2	3.2	7.5	10	3.2	1.9	0	0	.09
5	.36	.78	10	2.8	3.0	7.3	10	3.2	1.5	.01	0	.10
6	.19	.78	4.3	2.2	3.4	7.3	9.7	3.5	1.1	.06	0	.10
7	.16	.80	3.4	2.0	3.9	31	9.4	3.4	.78	.06	0	.10
8	.53	.89	6.5	1.8	3.4	29	8.8	3.1	.59	.01	0	.09
9	.60	.85	11	1.8	3.2	30	8.2	2.9	.26	.03	0	.06
10	.64	.80	5.5	2.2	3.0	22	7.9	2.8	.31	.04	0	.09
11	.60	1.3	4.1	2.6	73	38	7.6	3.0	.36	.03	0	.16
12	.55	1.1	3.3	2.0	64	48	7.3	2.6	.37	.04	0	.18
13	.37	1.0	2.9	1.3	59	39	7.0	2.4	.43	.06	0	.18
14	.45	1.2	2.7	1.4	31	39	7.0	2.4	.47	.05	0	.19
15	.51	1.2	2.5	1.4	20	28	7.0	2.3	.49	0	0	.16
16	.50	1.8	2.8	1.6	14	22	6.8	2.1	.45	.04	.01	.15
17	.64	2.4	2.4	7.3	11	19	6.5	2.0	.47	.06	0	.17
18	.72	2.2	2.0	5.5	9.8	16	6.5	1.8	.49	.06	0	.13
19	.80	2.0	1.5	27	8.8	14	6.0	1.7	.35	.06	0	.17
20	.94	1.6	1.6	13	7.9	26	6.0	1.7	.23	.06	0	.20
21	1.1	1.5	1.7	8.7	7.0	25	5.8	1.7	.19	.09	0	.22
22	1.2	1.5	1.8	6.5	6.5	42	5.2	1.7	.16	0	0	.30
23	.88	1.2	1.8	5.1	6.2	29	5.0	1.5	.10	0	0	.36
24	.79	1.1	1.8	4.4	5.8	23	5.0	1.4	.06	.07	0	.43
25	.75	1.1	1.8	3.9	5.2	20	5.0	1.6	.05	.06	0	.36
26	.73	1.1	1.5	4.1	5.0	20	4.8	1.9	.07	.06	0	.27
27	.85	1.2	1.5	3.5	4.8	20	4.8	1.6	.09	.06	0	.20
28	.88	1.2	1.6	3.2	9.7	20	4.1	1.3	.06	.03	0	.19
29	.80	1.1	1.7	3.0	------	19	3.7	1.1	.07	0	0	.17
30	.72	1.1	1.6	3.0	------	16	4.1	1.0	.07	0	0	.18
31	.42	------	1.5	3.0	------	14	------	1.2	------	.01	0	------
TOTAL	19.74	35.36	90.40	130.7	379.9	695.2	215.2	71.1	17.07	1.16	.08	5.04
MEAN	.64	1.18	2.92	4.22	13.6	22.4	7.17	2.29	.57	.037	.003	.17
MAX	1.2	2.4	11	27	73	48	13	4.1	2.0	.09	.03	.43
MIN	.16	.54	.80	1.3	2.6	6.8	3.7	1.0	.05	0	0	0
AC-FT	39	70	179	259	754	1,380	427	141	34	2.3	.2	10.0

CAL YR 1972 TOTAL 397.45 MEAN 1.09 MAX 11 MIN 0 AC-FT 788
WTR YR 1973 TOTAL 1,660.95 MEAN 4.55 MAX 73 MIN 0 AC-FT 3,290

PEAK DISCHARGE (BASE, 50 CFS)

DATE	TIME	G.H.	DISCHARGE	DATE	TIME	G.H.	DISCHARGE
1-19	0900	2.07	50	3-8	1845	2.11	54
2-11	1715	2.97	172	3-11	1915	2.42	86
2-13	0545	2.52	102	3-22	0645	2.18	61

11042500 TEMECULA CREEK AT VAIL DAM, CALIF.

LOCATION.--Lat 33°29'44", long 116°58'33", in Pauba Grant, Riverside County, at Vail Dam 0.2 mile downstream from Arroyo Seco, and 10 miles east of Temecula.

DRAINAGE AREA.--320 sq mi.

PERIOD OF RECORD.--October 1948 to current year. January 1923 to October 1930 at site 200 ft downstream and October 1930 to September 1948 at site 500 ft downstream, published as "at Nigger Canyon, near Temecula"; records not equivalent owing to change in natural water loss resulting from creation of Vail Lake. October 1948 to September 1951 published as "at Nigger Canyon, near Temecula"; records are for draft and spill only from Vail Lake. October 1951 to September 1955, published as "at Vail Dam, near Temecula."

GAGE.--Water-stage recorder with rain-gage attachment. National Weather Service type nonrecording rain gage 0.2 mile upstream. Datum of gage is 1,350.0 ft above mean sea level (levels by Bureau of Reclamation); gage readings have been reduced to elevations above mean sea level. Water-stage recorder at site 500 ft downstream measures release and spill.

AVERAGE DISCHARGE.--25 years (1923-48), 14.5 cfs (10,500 acre-ft per year), see PERIOD OF RECORD; 25 years (1948-73), 5.58 cfs (4,040 acre-ft per year).

REMARKS.--Records of discharge represent all water reaching Vail Lake, including precipitation on lake surface. Discharge computed on basis of records of storage, release (draft), spill, and evaporation. Monthly evaporation from lake surface computed on basis of evaporation from a class A evaporation pan using coefficient of 0.77, excepting the period June 1964 to September 1965, when a 24-inch diameter sunken screen pan with a coefficient of 0.98 was used. Area-capacity tables for lake are based on a survey made in 1947. Vail Dam completed in June 1949. Capacity of lake at spillway level (elevation, 1,470.00 ft), 49,370 acre-ft. Dead storage, 2.4 acre-ft below lowest outlet at elevation 1,352.5 ft included in these records. There has been no spill since Nov. 13, 1948, date of closure. Water is released as required down Temecula Creek for diversion about 1 mile below dam. Monthly precipitation, in inches, from National Weather Service type nonrecording rain gage is as follows: October, 0.83; November, 2.00; December, 1.60; January, 1.86; February, 3.42; March, 3.50; April, 0.19; the water year, 13.4.

MONTHLY DISCHARGE, WATER YEAR OCTOBER 1972 TO SEPTEMBER 1973

Date	Elevation (feet)a	Contents (acre-feet)	Change in contents (acre-feet)	Draft (acre-feet)	Evapo-ration (acre-feet)	Discharge (acre-feet)
		Vail Lake				
Sept. 30	1,438.71	21,883	-	-	-	-
Oct. 31	1,438.41	21,679	-204	b 31	194	21
Nov. 30	1,438.42	21,686	+7	b 16	148	171
Dec. 31	1,438.21	21,543	-143	206	149	212
CAL YR 1972	-	-	-2,357	456	3,592	1,691
Jan. 31	1,438.59	21,801	+258	1	124	383
Feb. 28	1,440.11	22,858	+1,057	0	115	1,172
Mar. 31	1,442.71	24,728	+1,870	0	146	2,016
Apr. 30	1,443.05	24,978	+250	b 1	279	530
May 31	1,442.72	24,736	-242	b 57	368	183
June 30	1,442.16	24,327	-409	b 117	489	197
July 31	1,441.48	23,836	-491	b 86	508	103
Aug. 31	1,440.87	23,398	-438	b 8	502	72
Sept. 30	1,440.38	23,050	-348	b 1	375	28
WTR YR 1973	-	-	+1,167	524	3,397	5,088

a Elevation at 2400.
b Draft, in acre-ft, includes pumping from lake as follows: October, 30; November, 16; April, 1; May, 57; June, 117; July, 86; August, 8; September, 1; total, 316; furnished by Rancho California Water District.
NOTE.--For months when inflow to the lake was small and other quantities were large, discordant figures of discharge may appear. This arises primarily from the difficulty of computing discharge as a residual of several larger quantities, which are not susceptible to measurement with a precision necessary to produce a final answer within desirable limits of accuracy.

11043000 MURRIETA CREEK AT TEMECULA, CALIF.

LOCATION.--Lat 33°28'47", long 117°08'35", in Temecula Grant, Riverside County, on right bank 0.4 mile upstream from mouth, and 1.0 mile south of Temecula.

DRAINAGE AREA.--222 sq mi.

PERIOD OF RECORD.--October 1924 to current year. Monthly discharge only October 1924 to September 1930, published in WSP 1315-B.

GAGE.--Water-stage recorder. Concrete low-water control since August 1962. Altitude of gage is 970 ft (from topographic map). See WSP 1735 for history of changes prior to Dec. 16, 1938.

AVERAGE DISCHARGE.--49 years, 8.82 cfs (6,390 acre-ft per year).

EXTREMES.--Current year: Maximum discharge, 2,570 cfs Feb. 13 (gage height, 6.72 ft); minimum daily, 0.23 cfs Oct. 15-18.
Period of record: Maximum discharge, 17,500 cfs Jan. 23, 1943 (gage height, 13.82 ft); minimum daily, 0.02 cfs at times in 1969.

REMARKS.--Records fair. No regulation above station. Pumping above station for irrigation of about 2,500 acres.

DISCHARGE, IN CUBIC FEET PER SECOND, WATER YEAR OCTOBER 1972 TO SEPTEMBER 1973

DAY	OCT	NOV	DEC	JAN	FEB	MAR	APR	MAY	JUN	JUL	AUG	SEP
1	.50	.56	.50	.64	.58	1.3	.55	.55	.49	.44	.62	.39
2	.48	.56	.50	.64	.56	.76	.49	.49	.49	.62	.62	.39
3	.43	.53	.55	.67	.64	.55	3.7	.44	.44	.55	.62	.44
4	.40	.50	8.2	.67	.64	.83	.62	.49	.44	.44	.68	.44
5	.36	.50	4.0	.67	.64	.49	.62	.49	.44	.49	.62	.39
6	.36	.48	1.7	.67	4.2	8.1	.55	.49	.39	.91	.62	.34
7	.34	.48	1.3	.64	1.8	15	.55	.55	.39	.91	.62	.29
8	.34	.48	2.8	.64	4.4	39	.49	.55	.39	.76	.44	.34
9	.32	.45	2.1	.77	.74	21	.44	.49	.39	.49	.68	.34
10	.30	.45	1.2	1.0	.57	2.4	.44	.44	.44	.44	.62	.34
11	.28	4.3	.88	.74	390	52	.44	.45	.49	.39	.55	.34
12	.26	3.5	.81	.67	39	26	.44	.55	.55	.55	.62	.34
13	.24	.88	.77	.67	451	5.2	.44	.44	.49	.68	.62	.39
14	.24	3.9	.74	.64	16	4.0	.44	.39	.44	.62	.62	.44
15	.23	9.7	.74	.64	7.4	1.3	.44	.39	.44	.62	.55	.44
16	.23	48	.74	3.8	2.7	.83	.49	.39	.39	.55	.68	.39
17	.23	35	.74	16	1.9	.62	.55	.39	.39	.49	.68	.39
18	.23	4.0	.74	6.0	1.4	.68	.55	.39	.39	.49	.39	.39
19	.26	2.0	.74	44	1.2	.76	.49	.62	.39	.44	.44	.39
20	28	1.8	.74	4.0	1.0	21	.44	.55	.39	.49	.39	.39
21	2.4	1.4	.71	1.4	.91	9.6	.44	.39	.44	.49	.39	.39
22	1.2	1.3	.77	.88	.91	34	.44	.39	.49	.68	.39	.44
23	1.1	1.2	.71	.84	.91	5.9	.44	.44	.49	.55	.39	.39
24	.81	1.1	.71	.77	.91	1.6	.49	.44	.39	.62	.39	.34
25	.67	1.0	.67	.71	.83	1.0	.49	.49	.39	.55	.44	.34
26	.64	.90	.67	.71	.83	1.0	.49	.44	.39	.44	.44	.29
27	.61	.80	.67	.64	.91	1.2	.55	.39	.39	.62	.68	.25
28	.61	.70	.67	.61	5.7	.83	.55	.34	.39	.76	.76	.25
29	.58	.60	.67	.58	------	.55	.62	.34	.39	.76	.83	.25
30	.58	.50	.64	.58	------	.49	.62	.34	.39	.62	.83	.34
31	.56	------	.67	.58	------	.55	------	.44	------	.62	.68	------
TOTAL	43.79	127.57	38.05	94.47	938.28	258.54	18.30	13.98	12.81	18.08	17.90	10.88
MEAN	1.41	4.25	1.23	3.05	33.5	8.34	.61	.45	.43	.58	.58	.36
MAX	28	48	8.2	44	451	52	3.7	.62	.55	.91	.83	.44
MIN	.23	.45	.50	.58	.56	.49	.44	.34	.39	.39	.39	.25
AC-FT	87	253	75	187	1,860	513	36	28	25	36	36	22

CAL YR 1972 TOTAL 389.36 MEAN 1.06 MAX 48 MIN .23 AC-FT 772
WTR YR 1973 TOTAL 1,592.65 MEAN 4.36 MAX 451 MIN .23 AC-FT 3,160

PEAK DISCHARGE (BASE, 55 CFS)

DATE	TIME	G.H.	DISCHARGE	DATE	TIME	G.H.	DISCHARGE
10-20	0300	3.17	118	2-13	0430	6.72	2,570
11-16	2100	3.29	228	3-8	1900	2.40	125
1-17	0100	2.43	70	3-11	1600	2.76	192
1-19	0100	2.58	102	3-22	0800	2.01	68
2-10	1100	6.30	1,900				

11044000 SANTA MARGARITA RIVER NEAR TEMECULA, CALIF.

LOCATION.--Lat 33°28'26", long 117°08'29", in Temecula Grant, Riverside County, on left bank at upper end of Temecula Canyon, 0.1 mile downstream from Murrieta Creek, and 1.4 miles south of Temecula.

DRAINAGE AREA.--588 sq mi.

PERIOD OF RECORD.--January 1923 to current year. Prior to October 1952, published as Temecula Creek at Railroad Canyon, near Temecula.

GAGE.--Water-stage recorder and crest-stage gage. Altitude of gage is 950 ft (from topographic map). Prior to Nov. 3, 1966, at site 100 ft downstream at same datum.

AVERAGE DISCHARGE.--25 years (1923-48), 28.2 cfs (20,420 acre-ft per year); 25 years (1948-73), 10.2 cfs (7,390 acre-ft per year).

EXTREMES.--Current year: Maximum discharge, 2,620 cfs Feb. 13 (gage height, 7.47 ft); minimum daily, 1.6 cfs Aug. 18-24.
Period of record: Maximum discharge, 25,000 cfs Feb. 16, 1927 (gage height, 14.6 ft, at site 100 ft downstream), from rating curve extended above 10,000 cfs; minimum daily, 0.30 cfs Aug. 18-22, 1965, regulation by construction work above station.

REMARKS.--Records good except those above 250 cfs, which are fair. Flow partly regulated since November 1948 by Vail Lake (see sta 11042500). Pumping above station for irrigation.

DISCHARGE, IN CUBIC FEET PER SECOND, WATER YEAR OCTOBER 1972 TO SEPTEMBER 1973

DAY	OCT	NOV	DEC	JAN	FEB	MAR	APR	MAY	JUN	JUL	AUG	SEP
1	1.7	2.4	2.9	3.2	3.8	5.6	3.8	3.4	2.9	1.8	1.8	1.8
2	1.7	2.4	3.0	3.0	3.7	4.6	3.6	3.4	3.0	1.8	1.8	2.0
3	1.6	2.4	3.6	3.2	4.6	4.3	5.4	3.3	2.5	1.9	1.8	2.0
4	1.7	2.6	13	3.5	5.5	5.0	4.3	3.3	2.4	1.8	1.9	2.1
5	1.7	2.6	7.2	3.3	4.1	4.4	4.1	3.5	2.4	1.9	1.9	1.9
6	1.6	2.6	4.8	3.4	5.6	13	4.1	3.4	2.4	2.0	2.0	1.8
7	1.8	2.6	5.1	3.4	6.4	21	4.3	3.4	2.2	2.1	2.0	1.8
8	1.8	2.6	7.9	3.4	5.2	49	3.9	3.4	2.1	2.0	1.9	1.8
9	1.8	2.6	6.0	4.1	4.7	30	3.9	3.3	2.1	2.0	2.0	1.9
10	1.8	2.6	4.1	4.6	4.4	11	3.9	3.3	2.1	1.9	2.0	2.0
11	1.8	8.2	3.6	3.6	435	75	3.8	3.2	2.3	1.9	2.1	1.7
12	1.8	7.6	3.6	3.6	94	35	3.8	3.2	2.4	1.9	2.1	1.8
13	1.8	4.3	3.5	3.6	501	11	3.8	3.1	2.4	2.1	2.1	2.0
14	1.8	9.0	3.5	3.6	20	9.1	3.8	3.1	2.4	2.0	2.1	2.0
15	2.0	13	3.4	3.6	12	6.0	3.8	3.0	2.3	1.9	1.8	2.1
16	2.0	56	3.4	9.7	6.9	5.2	3.8	3.1	2.2	1.9	2.2	2.0
17	2.1	40	3.4	21	5.4	5.0	4.1	3.1	2.2	1.9	2.2	2.0
18	2.1	7.2	3.2	20	4.8	5.0	4.1	3.1	2.1	1.9	1.6	1.8
19	2.4	5.1	3.1	52	4.7	5.1	3.9	3.2	2.1	1.9	1.6	1.9
20	31	4.8	3.2	13	4.5	38	3.9	3.1	2.0	1.9	1.6	1.9
21	5.1	4.1	3.1	10	4.4	16	3.7	3.0	2.0	1.9	1.6	2.3
22	3.2	3.8	3.2	6.6	4.3	47	3.6	2.8	1.9	2.1	1.6	2.2
23	2.8	3.7	3.4	4.1	4.2	9.3	3.7	3.0	1.9	2.0	1.6	2.2
24	3.2	3.6	3.4	3.8	4.2	6.6	3.6	2.9	1.9	1.8	1.6	2.2
25	2.6	3.5	3.2	3.9	4.0	4.8	3.6	3.2	1.9	1.8	1.8	2.2
26	2.2	3.4	3.0	4.1	3.8	5.1	3.6	3.1	2.0	1.7	1.9	1.8
27	2.6	3.3	3.2	3.8	3.9	5.6	3.4	2.8	2.0	1.7	2.2	1.6
28	2.8	3.2	3.4	3.6	13	6.2	3.6	2.6	1.9	1.8	2.3	1.7
29	3.0	3.1	3.4	3.6	------	5.1	3.8	2.5	1.8	1.8	2.4	1.7
30	2.6	3.0	3.2	3.7	------	4.8	3.8	2.8	1.8	1.8	2.4	1.8
31	2.6	------	3.2	3.7	------	4.6	------	3.0	------	1.8	2.2	------
TOTAL	98.7	215.3	127.2	219.7	1,178.1	457.4	116.5	96.6	65.6	58.7	60.1	58.0
MEAN	3.18	7.18	4.10	7.09	42.1	14.8	3.88	3.12	2.19	1.89	1.94	1.93
MAX	31	56	13	52	501	75	5.4	3.5	3.0	2.1	2.4	2.3
MIN	1.6	2.4	2.9	3.0	3.7	4.3	3.4	2.5	1.8	1.7	1.6	1.6
AC-FT	196	427	252	436	2,340	907	231	192	130	116	119	115

CAL YR 1972 TOTAL 1,161.0 MEAN 3.17 MAX 56 MIN 1.1 AC-FT 2,300
WTR YR 1973 TOTAL 2,751.9 MEAN 7.54 MAX 501 MIN 1.6 AC-FT 5,460

11044500 SANTA MARGARITA RIVER NEAR FALLBROOK, CALIF.

LOCATION.--Lat 33°23'54", long 117°15'44", in NE¼SE¼NE¼ sec.14, T.9 S., R.4 W., San Diego County, on right bank 180 ft upstream from De Luz Road, 1.3 miles northwest of Fallbrook, and 1.9 miles downstream from Sandia Canyon.

DRAINAGE AREA.--644 sq mi.

PERIOD OF RECORD.--October 1924 to current year. Monthly discharge only for October to November 1924, published in WSP 1315-B.

GAGE.--Water-stage recorder. Concrete-road control since October 1955. Datum of gage is 267.96 ft above mean sea level (levels by Bureau of Reclamation). Prior to Oct. 1, 1955, at site 1.7 miles upstream at different datum. Records equivalent except those for extreme low flows.

AVERAGE DISCHARGE.--24 years (1924-48), 35.4 cfs (25,630 acre-ft per year); 25 years (1948-73), 12.5 cfs (9,060 acre-ft per year).

EXTREMES.--Current year: Maximum discharge, 1,920 cfs Feb. 11 (gage height, 8.84 ft), from rating curve extended above 960 cfs on basis of computation of flow over road at gage height 12.50 ft; no flow Oct. 1-3, 6, Aug. 23-25.

Period of record: Maximum discharge, 33,100 cfs Feb. 16, 1927 (gage height, 15.6 ft, site and datum then in use), from rating curve extended above 8,800 cfs on basis of slope-area measurement of maximum flow; no flow at times in recent years.

REMARKS.--Records good. Flow partly regulated since November 1948 by Vail Lake (see sta 11042500). Several small diversions above station for irrigation. The Fallbrook Public Utility District reports no water pumped during the current year from a well in the streambed 2.1 miles upstream from the station.

REVISIONS (WATER YEARS).--WRD Calif. 1972: 1971.

DISCHARGE, IN CUBIC FEET PER SECOND, WATER YEAR OCTOBER 1972 TO SEPTEMBER 1973

DAY	OCT	NOV	DEC	JAN	FEB	MAR	APR	MAY	JUN	JUL	AUG	SEP
1	0	1.7	4.0	5.4	6.7	14	14	6.1	3.5	.77	.19	.84
2	0	1.9	4.0	5.5	6.5	9.5	13	5.2	3.7	.64	.19	.77
3	0	1.8	4.1	4.9	7.5	8.4	13	4.6	3.7	.50	.15	.70
4	.19	1.9	6.7	5.0	9.0	9.8	11	4.6	3.0	.45	.19	.77
5	.31	2.0	18	5.2	8.3	9.1	9.7	4.8	2.5	.40	.31	.77
6	.10	2.1	8.2	4.9	8.5	14	9.4	5.1	2.2	.63	.35	.70
7	0	2.0	8.9	4.9	10	48	9.4	4.8	2.0	.77	.35	.63
8	.39	2.1	10	4.9	10	64	9.0	4.7	1.7	.77	.35	.63
9	.83	2.1	12	5.6	8.5	87	8.0	4.6	1.6	.77	.45	.57
10	.97	2.0	8.8	6.3	8.1	23	8.2	4.5	1.5	.70	.70	.70
11	.85	3.4	7.1	6.1	459	76	8.0	4.6	1.6	.63	.84	.84
12	.82	7.1	6.4	5.4	189	102	7.9	4.9	1.7	.63	.77	.84
13	.90	6.0	6.1	5.1	510	32	7.8	5.1	2.0	.63	.63	.84
14	.83	6.5	5.8	5.1	71	24	7.8	5.1	2.0	.70	.57	.92
15	.87	12	5.7	5.1	29	18	7.6	4.9	1.8	.70	.35	.77
16	.88	16	5.4	7.6	21	15	7.2	4.5	1.6	.63	.31	.77
17	1.0	59	5.3	49	15	14	7.2	4.6	1.6	.63	.26	.70
18	1.3	22	5.1	18	13	13	7.3	4.5	1.6	.57	.40	.70
19	1.7	10	5.1	76	11	12	6.9	4.2	1.4	.50	.26	.63
20	2.7	7.4	5.1	28	10	66	6.7	4.0	1.1	.57	.15	.70
21	14	6.3	5.0	14	9.3	48	6.3	3.7	.77	.50	.12	.77
22	5.2	5.7	4.9	11	9.0	78	5.7	3.4	.63	.50	.04	.92
23	3.2	5.2	5.0	9.1	8.5	32	5.5	3.2	.57	.45	0	1.3
24	2.5	5.3	5.0	8.3	8.2	21	5.4	3.1	.57	.45	0	1.2
25	2.3	4.7	4.9	8.0	7.8	18	5.5	3.5	.57	.35	0	.92
26	2.0	4.5	4.7	8.1	7.6	17	5.3	3.8	.57	.35	.02	.77
27	1.8	4.4	4.7	7.6	7.4	18	5.5	3.2	.63	.26	.06	.50
28	1.8	4.3	4.8	7.2	24	19	5.6	2.6	.63	.22	.12	.26
29	1.7	4.2	4.9	6.9	------	20	6.0	2.3	.70	.22	.31	.12
30	2.0	4.1	4.7	6.8	------	16	6.4	2.4	.77	.26	.50	.19
31	1.8	------	4.9	6.8	------	14	------	2.7	------	.22	.70	------
TOTAL	52.94	217.7	195.3	351.8	1,492.9	959.8	236.3	129.3	48.21	16.37	9.64	21.74
MEAN	1.71	7.26	6.30	11.3	53.3	31.0	7.88	4.17	1.61	.53	.31	.72
MAX	14	59	18	76	510	102	14	6.1	3.7	.77	.84	1.3
MIN	0	1.7	4.0	4.9	6.5	8.4	5.3	2.3	.57	.22	0	.12
AC-FT	105	432	387	698	2,960	1,900	469	256	96	32	19	43

CAL YR 1972 TOTAL 1,221.20 MEAN 3.34 MAX 59 MIN 0 AC-FT 2,420
WTR YR 1973 TOTAL 3,732.00 MEAN 10.2 MAX 510 MIN 0 AC-FT 7,400

11046000 SANTA MARGARITA RIVER AT YSIDORA, CALIF.

LOCATION.--Lat 33°14'13", long 117°23'14", in NE¼SW¼NE¼ sec.10, T.11 S., R.5 W., San Diego County, on Camp Joseph H. Pendleton Naval Reservation, on left bank 1.7 miles upstream from mouth, and 2.0 miles southwest of Ysidora.

DRAINAGE AREA.--740 sq mi.

PERIOD OF RECORD.--February 1923 to current year.

GAGE.--Water-stage recorder. Datum of gage is 5.00 ft below mean sea level (U.S. Navy reference mark). See WSP 1735 for history of changes prior to Nov. 27, 1935. Nov. 27, 1935, to Feb. 25, 1970, at site 0.8 mile upstream at different datum.

AVERAGE DISCHARGE.--50 years, 27.5 cfs (19,920 acre-ft per year).

EXTREMES.--Current year: Maximum discharge, 1,400 cfs Feb. 14 (gage height, 12.49 ft), from rating curve extended above 140 cfs; no flow Oct. 1 to Feb. 11, July 25 to Sept. 30.
Period of record: Maximum discharge, 33,600 cfs Feb. 16, 1927 (gage height, 18.00 ft, site and datum then in use), on basis of slope-area measurement of maximum flow; no flow for parts of most years.

REMARKS.--Records fair except those below 1.0 cfs, which are poor. Flow partly regulated by Vail Lake since November 1948 (see sta 11042500). Diversions for irrigation on Rancho California (formerly Santa Margarita Ranch and Pauba Ranch). Conservation pools, 0.9 mile upstream, detains low flow. Records of suspended-sediment discharge for the current year are published in Part 2 of this report. AVERAGE DISCHARGE represents flow to ocean during period of record, regardless of upstream development.

DISCHARGE, IN CUBIC FEET PER SECOND, WATER YEAR OCTOBER 1972 TO SEPTEMBER 1973

DAY	OCT	NOV	DEC	JAN	FEB	MAR	APR	MAY	JUN	JUL	AUG	SEP
1					0	3.0	18	1.4	.60	.20		
2					0	2.3	17	1.4	.60	.17		
3					0	1.9	16	1.3	.60	.17		
4					0	1.8	15	1.3	.53	.17		
5					0	1.9	14	1.2	.53	.14		
6					0	1.8	13	1.2	.53	.14		
7					0	1.8	12	1.1	.53	.11		
8					0	15	11	1.1	.53	.11		
9					0	145	9.8	1.0	.53	.11		
10					0	100	9.0	1.0	.53	.08		
11					0	60	8.3	1.0	.53	.08		
12					494	228	7.6	1.0	.53	.06		
13					315	144	7.0	1.0	.53	.06		
14					437	88	6.4	1.0	.46	.06		
15					113	59	5.8	1.0	.46	.04		
16					56	44	5.5	.94	.46	.04		
17					34	36	5.0	.94	.40	.03		
18					23	30	4.4	.84	.40	.03		
19					18	24	4.0	.75	.40	.03		
20					13	46	3.5	.84	.34	.02		
21					8.0	151	3.1	.75	.34	.02		
22					5.2	110	2.7	.67	.34	.01		
23					4.0	122	2.4	.67	.29	.01		
24					3.5	67	2.2	.67	.29	.01		
25					3.0	50	2.0	.67	.29	0		
26					2.5	40	1.9	.67	.24	0		
27					2.0	34	1.8	.67	.24	0		
28					2.0	30	1.6	.60	.24	0		
29					------	25	1.6	.60	.20	0		
30					------	22	1.5	.60	.20	0		
31		------			------	19	------	.60	------	0		------
TOTAL	0	0	0	0	1,533.2	1,703.5	213.1	28.48	12.69	1.90	0	0
MEAN	0	0	0	0	54.8	55.0	7.10	.92	.42	.061	0	0
MAX	0	0	0	0	494	228	18	1.4	.60	.20	0	0
MIN	0	0	0	0	0	1.8	1.5	.60	.20	0	0	0
AC-FT	0	0	0	0	3,040	3,380	423	56	25	3.8	0	0

CAL YR 1972 TOTAL 0.00 MEAN .00 MAX .0 MIN 0 AC-FT 0
WTR YR 1973 TOTAL 3,492.87 MEAN 9.57 MAX 494 MIN 0 AC-FT 6,930

11046100 LAS FLORES CREEK NEAR OCEANSIDE, CALIF.

LOCATION.--Lat 33°17'32", long 117°27'21", in NW¼SE¼ sec.24, T.10 S., R.6 W., San Diego County, Camp Joseph H. Pendleton Naval Reservation, on upstream side and at center of bridge on Atchison, Topeka, and Santa Fe Railway, 0.5 mile upstream from mouth, and 8.5 miles northwest of Oceanside.

DRAINAGE AREA.--26.6 sq mi.

PERIOD OF RECORD.--May 1951 to September 1967, October 1969 to current year.

GAGE.--Water-stage recorder and multiple concrete culvert control. Altitude of gage is 35 ft (from topographic map).

AVERAGE DISCHARGE.--20 years, 0.60 cfs (435 acre-ft per year).

EXTREMES.--Current year: Maximum discharge, 63 cfs Feb. 11 (gage height, 1.59 ft), from rating curve extended above 4 cfs on basis of a field estimate; no flow Oct. 1-4, Oct. 6 to Nov. 13, June 16 to Sept. 30.
Period of record: Maximum discharge, 960 cfs Jan. 16, 1952 (gage height, 4.75 ft), based on critical-depth determination of maximum flow; no flow for long periods in most years.
Flood of Feb. 25, 1969, reached a stage of 7.25 ft, from floodmarks (discharge, 4,200 cfs).

REMARKS.--Records fair. No regulation above station. Some pumping above station for irrigation.

REVISIONS (WATER YEARS).--WRD Calif. 1972: 1971.

DISCHARGE, IN CUBIC FEET PER SECOND, WATER YEAR OCTOBER 1972 TO SEPTEMBER 1973

DAY	OCT	NOV	DEC	JAN	FEB	MAR	APR	MAY	JUN	JUL	AUG	SEP
1	0	0	.01	.01	.01	.02	.02	.01	.01			
2	0	0	.01	.01	.01	.02	.01	.01	.01			
3	0	0	.01	.01	.02	.02	.01	.01	.01			
4	0	0	.05	.02	.01	.02	.01	.01	.01			
5	.01	0	.03	.01	.01	.02	.01	.01	.01			
6	0	0	.02	.01	.04	.03	.01	.01	.01			
7	0	0	.02	.01	.01	.45	.01	.01	.01			
8	0	0	.02	.01	.01	1.9	.01	.01	.01			
9	0	0	.01	.02	.01	1.8	.01	.01	.01			
10	0	0	.01	.02	.01	.04	.01	.01	.01			
11	0	0	.01	.01	10	1.5	.01	.01	.01			
12	0	0	.01	.01	3.4	2.1	.01	.01	.01			
13	0	0	.01	.01	12	.08	.01	.01	.01			
14	0	.04	.01	.02	1.3	.03	.01	.01	.01			
15	0	.01	.01	.02	.22	.02	.01	.01	.01			
16	0	.06	.01	.10	.03	.03	.02	.01	0			
17	0	.02	.01	2.0	.03	.03	.02	.01	0			
18	0	.01	.01	1.4	.03	.03	.02	.01	0			
19	0	.01	.01	6.3	.03	.02	.01	.01	0			
20	0	.01	.01	.12	.02	4.1	.01	.01	0			
21	0	.01	.01	.03	.02	2.2	.01	.01	0			
22	0	.01	.01	.02	.02	.72	.01	.01	0			
23	0	.01	.01	.02	.02	.04	.01	.01	0			
24	0	.01	.01	.02	.02	.03	.01	.01	0			
25	0	.01	.01	.02	.02	.03	.01	.01	0			
26	0	.01	.01	.01	.02	.06	.02	.01	0			
27	0	.01	.01	.01	.03	.03	.02	.01	0			
28	0	.01	.01	.01	.06	.03	.03	.01	0			
29	0	.01	.01	.01	------	.03	.02	.01	0			
30	0	.01	.01	.02	------	.03	.02	.01	0			
31	0	------	.01	.01	------	.03	------	.01	------			------
TOTAL	.01	.26	.40	10.30	27.41	15.49	.40	.31	.15	0	0	0
MEAN	.0003	.009	.013	.33	.98	.50	.013	.010	.005	0	0	0
MAX	.01	.06	.05	6.3	12	4.1	.03	.01	.01	0	0	0
MIN	0	0	.01	.01	.01	.02	.01	.01	0	0	0	0
AC-FT	.02	.5	.8	20	54	31	.8	.6	.3	0	0	0

CAL YR 1972 TOTAL 2.83 MEAN .008 MAX .06 MIN 0 AC-FT 5.6
WTR YR 1973 TOTAL 54.73 MEAN .15 MAX 12 MIN 0 AC-FT 109

PEAK DISCHARGE (BASE, 100 CFS).--No peak above base.

11046550 SAN JUAN CREEK AT SAN JUAN CAPISTRANO, CALIF.

LOCATION.--Lat 33°29'30", long 117°39'44", in SW¼SE¼NE¼ sec.12, T.8 S., R.8 W., Orange County, on left bank at Camino Capistrano bridge, 0.2 mile upstream from Arroyo Trabuco, and 0.6 mile south of San Juan Capistrano.

DRAINAGE AREA.--117 sq mi.

PERIOD OF RECORD.--October 1969 to current year.

GAGE.--Water-stage recorder. Altitude of gage is 59.21 ft above mean sea level.

EXTREMES.--Current year: Maximum discharge, 445 cfs Feb. 11 (gage height, 4.35 ft); minimum daily, 0.04 cfs Oct. 8.
Period of record: Maximum discharge, 445 cfs Feb. 11, 1973 (gage height, 4.35 ft); no flow at times in most years.
Flood of Feb. 25, 1969, 22,400 cfs, at site 2.8 miles upstream, as station 11046500.

REMARKS.--Records poor. No regulation above station. Capistrano Water Co. diverted 3.0 miles upstream. Various amounts of diverted water reaches station as irrigation return flow and rising ground water. Data for San Juan Creek near San Juan Capistrano (11046500) previously collected at site 2.8 miles upstream was published as creek only and combined. Records of suspended-sediment discharge for the current year are published in Part 2 of this report.

COOPERATION.--Sixteen discharge measurements furnished by Orange County Flood Control District.

DISCHARGE, IN CUBIC FEET PER SECOND, WATER YEAR OCTOBER 1972 TO SEPTEMBER 1973

DAY	OCT	NOV	DEC	JAN	FEB	MAR	APR	MAY	JUN	JUL	AUG	SEP
1	.17	.21	.75	.12	.50	10	29	8.5	9.3	2.2	1.9	1.3
2	.23	.23	1.1	.12	.50	7.0	26	7.7	9.5	2.2	1.9	1.1
3	.10	.23	.98	.12	.49	5.0	24	7.0	8.9	2.1	1.9	.71
4	.14	.31	4.1	.20	.49	8.0	21	7.1	8.4	2.1	1.9	.69
5	.23	.35	.82	.61	.49	6.0	21	7.4	7.4	2.1	1.7	.59
6	.35	.39	.49	.44	3.7	7.0	19	7.2	6.9	2.1	1.8	.61
7	.27	.39	1.8	.39	2.6	77	19	6.4	5.8	2.0	1.8	.59
8	.04	.44	1.9	.44	1.0	80	18	6.3	5.9	2.0	1.6	.87
9	.07	.31	.49	.90	.80	88	16	6.2	4.9	2.0	1.6	.64
10	.05	.35	.36	.44	1.5	59	16	5.9	4.3	2.0	1.6	.51
11	.27	3.1	.27	.61	146	61	16	6.2	4.2	2.0	1.6	.51
12	.49	.54	.25	1.4	160	90	15	7.4	4.0	2.0	1.4	.42
13	1.1	.45	.21	1.2	205	75	14	8.0	3.8	2.0	1.4	.44
14	1.2	8.7	.23	1.2	67	65	14	7.1	3.6	2.0	1.4	.37
15	.20	1.5	.20	1.2	23	54	14	5.9	3.5	2.0	1.3	.37
16	.20	28	.20	26	8.0	48	14	5.9	3.4	2.0	1.3	.30
17	.07	1.5	.17	16	6.0	44	14	6.2	3.3	2.0	1.3	.30
18	.31	.80	.17	20	5.2	42	13	6.2	3.2	2.0	1.3	.30
19	10	.70	.16	26	4.8	39	13	6.5	3.1	2.0	1.2	.24
20	11	.66	.16	2.6	4.5	101	13	8.2	3.0	2.0	1.2	.24
21	.10	.62	.15	1.0	4.1	88	12	8.6	2.9	1.9	1.2	.62
22	.07	.56	.15	.76	3.9	118	11	8.0	2.8	1.9	1.0	.52
23	.07	.61	.15	.66	3.8	86	9.7	5.8	2.7	1.9	1.0	.19
24	.06	.68	.14	.61	3.7	67	8.5	6.2	2.6	1.9	1.0	.19
25	.06	.68	.14	.58	3.6	58	8.7	6.8	2.5	1.9	.89	.14
26	.12	.68	.14	.56	3.6	52	7.8	7.8	2.4	1.9	.93	.24
27	.28	.68	.13	.54	3.6	46	7.5	7.9	2.4	1.9	.90	.37
28	.22	.68	.13	.54	35	42	8.1	8.0	2.3	1.9	.93	.30
29	.21	.68	.12	.52	------	40	9.1	8.8	2.3	1.9	.80	.72
30	.19	.68	.12	.52	------	34	9.1	7.2	2.3	1.9	.81	.93
31	.19	------	.12	.51	------	30	------	8.9	------	1.9	.86	------
TOTAL	28.06	55.71	16.30	106.79	702.87	1,627.0	440.5	221.3	131.6	61.7	41.42	15.32
MEAN	.91	1.86	.53	3.44	25.1	52.5	14.7	7.14	4.39	1.99	1.34	.51
MAX	11	28	4.1	26	205	118	29	8.9	9.5	2.2	1.9	1.3
MIN	.04	.21	.12	.12	.49	5.0	7.5	5.8	2.3	1.9	.80	.14
AC-FT	56	111	32	212	1,390	3,230	874	439	261	122	82	30

CAL YR 1972 TOTAL 209.51 MEAN .57 MAX 28 MIN 0 AC-FT 416
WTR YR 1973 TOTAL 3,448.57 MEAN 9.45 MAX 205 MIN .04 AC-FT 6,840

PEAK DISCHARGE (BASE, 200 CFS)

DATE	TIME	G.H.	DISCHARGE	DATE	TIME	G.H.	DISCHARGE
10-19	2330	4.08	233	2-11	1745	4.35	445
11-16	1045	4.15	285				

11047200 OSO CREEK AT CROWN VALLEY PARKWAY, NEAR MISSION VIEJO, CALIF.

LOCATION.--Lat 33°33'29", long 117°40'33", in SE¼ sec.14, T.7 S., R.8 W., Orange County, on right upstream side of Crown Valley Parkway bridge, 2.7 miles south of Mission Viejo, and 4.0 miles north of San Juan Capistrano.

DRAINAGE AREA.--14.0 sq mi.

PERIOD OF RECORD.--December 1969 to current year.

GAGE.--Water-stage recorder. Altitude of gage is 250 ft (from topographic map).

EXTREMES.--Current year: Maximum discharge, 1,630 cfs Feb. 11 (gage height, 7.67 ft); no flow many days.
Period of record: Maximum discharge, 1,630 cfs Feb. 11, 1973 (gage height, 7.67 ft); no flow at times in each year.

REMARKS.--Records poor. No regulation or diversion above station.

COOPERATION.--Records furnished by Orange County Flood Control District and reviewed by Geological Survey.

DISCHARGE, IN CUBIC FEET PER SECOND, WATER YEAR OCTOBER 1972 TO SEPTEMBER 1973

DAY	OCT	NOV	DEC	JAN	FEB	MAR	APR	MAY	JUN	JUL	AUG	SEP
1	0	0	.30	1.0	1.0	2.6	.60	.40	.80	.40	.30	.10
2	0	0	.40	1.0	1.1	2.1	.50	.60	.80	.40	.40	.10
3	0	0	.30	1.0	3.8	1.8	.50	.70	.60	.40	.30	.10
4	0	.10	30	2.0	1.8	3.2	.40	.40	.60	.30	.30	.10
5	0	.10	2.6	1.4	1.5	1.7	.70	.40	.60	.20	.20	.10
6	0	.10	1.8	1.4	15	20	.60	.40	.60	.30	.30	.20
7	0	.10	19	1.4	5.2	8.5	.60	.30	.50	.30	.30	.10
8	0	.20	14	1.4	2.6	34	.50	.40	.60	.30	.30	.10
9	.20	.10	1.4	10	2.2	5.1	.40	.40	.80	.20	.20	.10
10	.20	.10	.90	4.7	9.5	4.2	.40	.60	.60	.20	.20	.10
11	.10	20	.90	1.7	146	18	.40	.90	.60	.20	.20	.10
12	0	.30	.90	1.4	26	6.3	.50	.90	.50	.20	.20	.10
13	0	.20	.90	1.5	58	1.6	.40	.90	.50	.30	.20	.10
14	0	67	.80	1.7	2.8	1.2	.30	.90	.40	.30	.20	.10
15	0	.90	.90	1.7	5.1	2.1	.30	.80	.40	.20	.20	.10
16	0	91	1.1	81	2.8	1.6	.30	.80	.40	.20	.20	.10
17	0	5.1	1.1	5.7	3.2	1.2	.30	.80	.40	.20	.20	.10
18	0	2.0	1.4	82	2.1	1.1	.20	.80	.30	.30	.20	.10
19	.60	1.6	1.1	9.4	2.2	1.2	.20	.90	.30	.30	.20	.10
20	.10	1.7	1.0	1.8	2.1	31	.20	.80	.30	.30	.20	.10
21	.10	1.4	1.0	1.6	2.2	13	.20	.80	.30	.30	.20	.10
22	0	1.1	1.0	2.0	2.1	8.4	.20	.70	.30	.30	.20	.10
23	0	.70	1.1	1.2	1.9	1.0	.20	.70	.30	.30	.20	0
24	0	.60	1.4	1.0	2.1	1.2	.30	.80	.30	.30	.10	0
25	0	.60	1.0	1.4	1.9	.80	.30	.90	.30	.30	.20	0
26	.30	.60	1.0	1.2	2.2	2.6	.30	.70	.40	.30	.10	0
27	.20	.50	1.1	1.0	13	3.2	.40	.70	.40	.30	.10	0
28	.10	.40	1.0	1.0	12	1.0	.60	.60	.40	.30	.10	0
29	0	.40	1.2	1.0	------	.90	.60	.70	.40	.30	.10	0
30	0	.40	1.0	2.0	------	.80	.50	.80	.40	.30	.10	0
31	0	------	.90	1.4	------	.70	------	.80	------	.30	.10	------
TOTAL	1.90	197.30	92.50	228.0	331.4	182.10	11.90	21.30	14.10	8.80	6.30	2.30
MEAN	.061	6.58	2.98	7.35	11.8	5.87	.40	.69	.47	.28	.20	.077
MAX	.60	91	30	82	146	34	.70	.90	.80	.40	.40	.20
MIN	0	0	.30	1.0	1.0	.70	.20	.30	.30	.20	.10	0
AC-FT	3.8	391	183	452	657	361	24	42	28	17	12	4.6

CAL YR 1972 TOTAL 407.16 MEAN 1.11 MAX 91 MIN 0 AC-FT 808
WTR YR 1973 TOTAL 1,097.90 MEAN 3.01 MAX 146 MIN 0 AC-FT 2,180

11047300 ARROYO TRABUCO AT SAN JUAN CAPISTRANO, CALIF.

LOCATION.--Lat 33°29'54", long 117°39'54", on line between secs.1 and 12, T.8 S., R.8 W., Orange County, on downstream side of bridge on Del Obispo Street in San Juan Capistrano.

DRAINAGE AREA.--54.1 sq mi.

PERIOD OF RECORD.--October 1972 to September 1973.

GAGE.--Water-stage recorder. Datum of gage is 80 ft (from topographic map).

EXTREMES.--Current year: Maximum discharge, 1,380 cfs Feb. 11 (gage height, 2.50 ft); no flow many days.

REMARKS.--No regulation or diversion above station. Records of chemical analyses for the current year are published in Part 2 of this report.

COOPERATION.--Records furnished by Orange County Flood Control District and reviewed by Geological Survey.

DISCHARGE, IN CUBIC FEET PER SECOND, WATER YEAR OCTOBER 1972 TO SEPTEMBER 1973

DAY	OCT	NOV	DEC	JAN	FEB	MAR	APR	MAY	JUN	JUL	AUG	SEP
1	0	0	0	.10	.30	5.1	12	2.0	0	0	0	0
2	0	0	0	.10	.20	3.8	12	2.0	.10	.10	0	0
3	0	0	0	.10	.50	2.9	11	3.4	.10	.10	0	0
4	0	0	25	.10	.40	4.2	9.2	3.4	0	.10	0	0
5	0	0	0	.10	.20	2.0	11	3.4	0	.10	0	.10
6	0	0	0	.10	17	32	11	3.4	0	.10	0	0
7	0	0	13	.10	6.0	80	10	3.2	0	.10	0	0
8	0	0	12	.10	1.5	140	10	2.9	0	.10	0	0
9	0	0	1.0	1.5	1.7	117	8.3	2.4	0	.10	0	.10
10	0	0	.50	4.2	5.1	102	9.2	2.0	0	.10	0	.10
11	0	.50	.20	.10	225	174	6.5	2.9	0	.10	0	.10
12	0	0	.10	.10	113	71	7.4	3.8	0	.10	0	.10
13	0	0	.10	.10	160	27	6.5	5.1	0	.10	0	0
14	0	118	.10	.10	55	20	6.5	5.1	0	.10	0	0
15	0	20	.10	.10	24	28	6.0	6.5	0	.10	0	0
16	0	161	.10	72	13	23	5.6	5.1	0	.10	0	0
17	0	9.0	.10	41	7.4	17	5.1	4.7	0	.10	0	0
18	0	0	.10	81	5.1	10	4.7	4.0	0	.10	0	0
19	12	0	.10	25	4.2	3.8	4.2	3.0	0	0	0	0
20	23	0	.10	8.3	3.3	103	9.2	2.0	0	0	.20	0
21	0	0	.10	4.2	2.9	48	7.4	.80	0	0	0	0
22	0	0	.10	3.0	2.9	75	4.2	.70	0	0	0	0
23	0	0	.10	2.0	2.9	26	2.0	.60	0	0	0	0
24	0	0	.10	.80	2.0	21	6.0	.50	0	0	0	0
25	0	0	.10	.70	1.7	21	5.6	.40	0	0	0	0
26	0	0	.10	.60	1.5	20	5.6	.30	0	0	0	0
27	0	0	.10	.40	4.2	20	7.4	.20	0	0	.10	0
28	0	0	.10	.30	24	18	8.3	.10	0	0	.10	0
29	0	0	.10	.30	------	17	9.2	0	0	0	.10	0
30	0	0	.10	.50	------	17	8.3	0	0	0	.10	0
31	0	------	.10	.40	------	13	------	0	------	0	0	------
TOTAL	35	308.50	53.70	247.50	685.00	1,261.8	229.4	73.90	.20	1.70	.60	.50
MEAN	1.13	10.3	1.73	7.98	24.5	40.7	7.65	2.38	.007	.055	.019	.017
MAX	23	161	25	81	225	174	12	6.5	.10	.10	.20	.10
MIN	0	0	0	.10	.20	2.0	2.0	0	0	0	0	0
AC-FT	69	612	107	491	1,360	2,500	455	147	.4	3.4	1.2	1.0

WTR YR 1973 TOTAL 2,897.80 MEAN 7.94 MAX 225 MIN 0 AC-FT 5,750

11047500 ALISO CREEK AT EL TORO, CALIF.

LOCATION.--Lat 33°37'34", long 117°41'03", in Canada de los Alisos Grant, Orange County, near center of channel on upstream side of Second Street Bridge at El Toro.

DRAINAGE AREA.--7.91 sq mi.

PERIOD OF RECORD.--October 1930 to current year.

GAGE.--Water-stage recorder. Altitude of gage is 440 ft (from topographic map). Prior to July 1962, at different datum.

AVERAGE DISCHARGE.--43 years, 0.73 cfs (529 acre-ft per year).

EXTREMES.--Current year: Maximum discharge, 710 cfs Feb. 11 (gage height, 4.69 ft); no flow many days.
Period of record: Maximum discharge, 2,500 cfs Feb. 24, 1969 (gage height, 11.00 ft, from floodmark), from rating curve extended above 220 cfs on basis of slope-area measurement of maximum flow; no flow most of each year.

REMARKS.--Records poor. No regulation or diversion above station; some pumping from wells along stream. At times since 1964, Metropolitan Water District has wasted water to creek.

COOPERATION.--Records furnished by Orange County Flood Control District and reviewed by Geological Survey.

DISCHARGE, IN CUBIC FEET PER SECOND, WATER YEAR OCTOBER 1972 TO SEPTEMBER 1973

DAY	OCT	NOV	DEC	JAN	FEB	MAR	APR	MAY	JUN	JUL	AUG	SEP
1	0	0	0	0	0	0						
2	.10	.10	0	0	0	0						
3	.10	.10	0	0	0	0						
4	.10	.10	5.0	0	0	0						
5	.10	.10	.30	0	0	0						
6	.10	.10	.10	0	.10	.20						
7	0	.10	4.0	0	0	.10						
8	.10	.10	4.3	0	0	8.8						
9	.10	.10	.10	.40	0	0						
10	0	.10	0	.10	.10	0						
11	0	1.7	0	0	94	.90						
12	0	.40	0	0	30	.20						
13	0	.20	0	0	55	0						
14	0	12	0	0	.70	0						
15	0	.20	0	0	.90	0						
16	.10	17	0	18	0	0						
17	0	.80	0	1.2	0	0						
18	.10	.10	0	27	0	0						
19	0	.10	0	10	0	0						
20	0	.10	0	0	0	8.1						
21	.10	.10	0	0	0	8.1						
22	0	.10	0	0	0	3.8						
23	0	.10	0	0	0	0						
24	0	.10	0	0	0	0						
25	0	.10	0	0	0	0						
26	0	.10	0	0	0	0						
27	.10	.10	0	0	.81	0						
28	0	.10	0	0	1.2	0						
29	0	.10	0	0	------	0						
30	0	.10	0	0	------	0						
31	0	------	0	0	------	0	------		------			------
TOTAL	1.10	34.50	13.80	56.70	182.81	30.20	0	0	0	0	0	0
MEAN	.036	1.15	.45	1.83	6.53	.97	0	0	0	0	0	0
MAX	.10	17	5.0	27	94	8.8	0	0	0	0	0	0
MIN	0	0	0	0	0	0	0	0	0	0	0	0
AC-FT	2.2	68	27	112	363	60	0	0	0	0	0	0

CAL YR 1972 TOTAL 89.30 MEAN .24 MAX 17 MIN 0 AC-FT 177
WTR YR 1973 TOTAL 319.11 MEAN .87 MAX 94 MIN 0 AC-FT 633

11048500 SAN DIEGO CREEK NEAR IRVINE, CALIF.

LOCATION.--Lat 33°40'20", long 117°47'10", in San Joaquin Grant, Orange County, on left bank 200 ft downstream from Jeffrey Road Bridge, and 1.5 miles west of Irvine.

DRAINAGE AREA.--40.3 sq mi.

PERIOD OF RECORD.--October 1949 to current year.

GAGE.--Water-stage recorder and concrete control. Datum of gage is 102.86 ft above mean sea level (levels by Orange County Flood Control District).

AVERAGE DISCHARGE.--24 years, 3.28 cfs (2,380 acre-ft per year).

EXTREMES.--Current year: Maximum discharge, 1,840 cfs Feb. 11 (gage height, 5.45 ft), from rating curve extended above 700 cfs on basis of slope-area measurements at gage heights 9.20 and 11.46 ft; no flow Dec. 25.
Period of record: Maximum discharge, 6,700 cfs Feb. 24, 1969 (gage height, 11.46 ft), from rating curve extended above 510 cfs on basis of slope-area measurements at gage heights 9.20 and 11.46 ft; no flow for long periods in most years.

REMARKS.--Records good. Pumping from wells along stream causes low-flow fluctuation in discharge.

COOPERATION.--Eight discharge measurements furnished by Orange County Flood Control District.

DISCHARGE, IN CUBIC FEET PER SECOND, WATER YEAR OCTOBER 1972 TO SEPTEMBER 1973

DAY	OCT	NOV	DEC	JAN	FEB	MAR	APR	MAY	JUN	JUL	AUG	SEP
1	1.2	.98	.53	.59	.09	1.8	4.6	1.6	2.9	1.0	2.4	2.2
2	1.4	1.1	.16	.17	.17	.30	1.2	1.4	2.8	1.0	1.9	.99
3	1.2	1.2	.17	.38	11	.02	2.1	1.1	2.7	1.8	1.2	.69
4	1.0	.95	49	.30	8.0	1.2	2.1	1.0	2.3	2.4	1.1	.53
5	.87	.79	13	.84	.13	.06	2.4	3.0	2.5	2.4	1.0	.76
6	.44	.81	1.5	1.8	106	.59	1.4	2.4	1.9	2.4	1.1	.74
7	.67	.61	57	1.8	33	2.4	.38	1.4	1.5	2.7	.99	.68
8	.55	.87	25	.59	13	109	.23	1.8	2.6	3.4	1.5	.97
9	.64	.78	10	10	2.7	9.4	.13	1.6	2.4	2.4	1.6	.99
10	.94	.83	3.5	10	24	4.2	.30	1.0	3.3	3.4	1.9	1.3
11	1.3	8.9	1.7	1.8	532	134	.71	.71	4.0	3.4	2.6	1.6
12	1.3	.69	1.0	2.1	115	73	1.0	1.2	4.2	4.2	2.2	2.1
13	1.4	.30	.38	.84	242	4.2	.71	3.8	4.8	3.0	1.9	2.1
14	2.2	69	1.1	.06	25	2.1	1.4	2.1	.71	4.6	1.8	1.8
15	2.0	8.9	1.2	.48	19	1.2	1.4	1.4	1.4	4.6	1.6	2.4
16	2.0	226	1.7	161	7.5	1.0	.30	1.6	1.8	3.0	1.9	2.7
17	1.5	23	.36	70	5.1	.71	.71	1.6	3.0	3.4	1.7	1.6
18	2.1	1.6	.10	175	2.1	.71	1.0	1.2	2.7	2.7	1.0	3.0
19	2.4	1.0	.50	92	.59	.13	.48	2.1	2.4	2.7	.54	3.0
20	1.9	.94	1.5	5.6	.42	197	.84	2.1	3.0	5.1	.85	1.0
21	1.9	.55	.52	1.2	.80	38	1.4	2.0	3.4	5.1	1.3	1.4
22	2.6	.33	.82	.38	.33	94	1.0	2.0	3.0	4.6	1.6	1.8
23	2.5	.39	.58	1.2	.48	15	.48	2.8	3.0	3.8	1.8	2.4
24	2.2	.15	.16	3.4	.38	11	.38	3.4	2.4	4.2	2.1	1.8
25	1.1	.06	0	3.8	.30	8.7	.71	3.1	2.1	3.0	2.4	1.4
26	1.2	.06	.02	5.1	.31	9.8	1.0	.98	1.8	1.8	.84	2.1
27	.99	.03	.13	3.8	1.0	6.5	1.6	.82	1.6	1.8	.48	1.8
28	.85	.17	.71	.30	187	3.8	1.5	1.2	1.0	2.7	.84	1.6
29	.54	.59	.38	.06	------	2.1	1.4	.89	1.6	3.0	.71	1.4
30	.86	.65	1.0	6.6	------	3.8	2.0	2.1	1.6	2.1	1.4	2.7
31	1.5	------	1.0	1.4	------	5.6	------	2.0	------	3.1	2.1	------
TOTAL	43.25	352.23	174.72	562.59	1,337.40	741.32	34.86	55.40	74.41	94.8	46.35	49.55
MEAN	1.40	11.7	5.64	18.1	47.8	23.9	1.16	1.79	2.48	3.06	1.50	1.65
MAX	2.6	226	57	175	532	197	4.6	3.8	4.8	5.1	2.6	3.0
MIN	.44	.03	0	.06	.09	.02	.13	.71	.71	1.0	.48	.53
AC-FT	86	699	347	1,120	2,650	1,470	69	110	148	188	92	98

CAL YR 1972 TOTAL 1,051.05 MEAN 2.87 MAX 226 MIN 0 AC-FT 2,080
WTR YR 1973 TOTAL 3,566.88 MEAN 9.77 MAX 532 MIN 0 AC-FT 7,070

PEAK DISCHARGE (BASE, 300 CFS, REVISED)

DATE	TIME	G.H.	DISCHARGE	DATE	TIME	G.H.	DISCHARGE
11-14	1315	2.79	366	2-13	0345	4.29	1,100
11-16	1230	3.64	750	2-28	0030	3.84	852
1-16	2230	3.71	785	3-8	1245	2.90	410
1-18	1945	4.15	1,020	3-11	1100	3.54	700
2-6	1130	2.79	366	3-20	0715	3.75	805
2-11	0615	5.45	1,840	3-21	2315	2.91	414
2-12	0800	2.71	334				

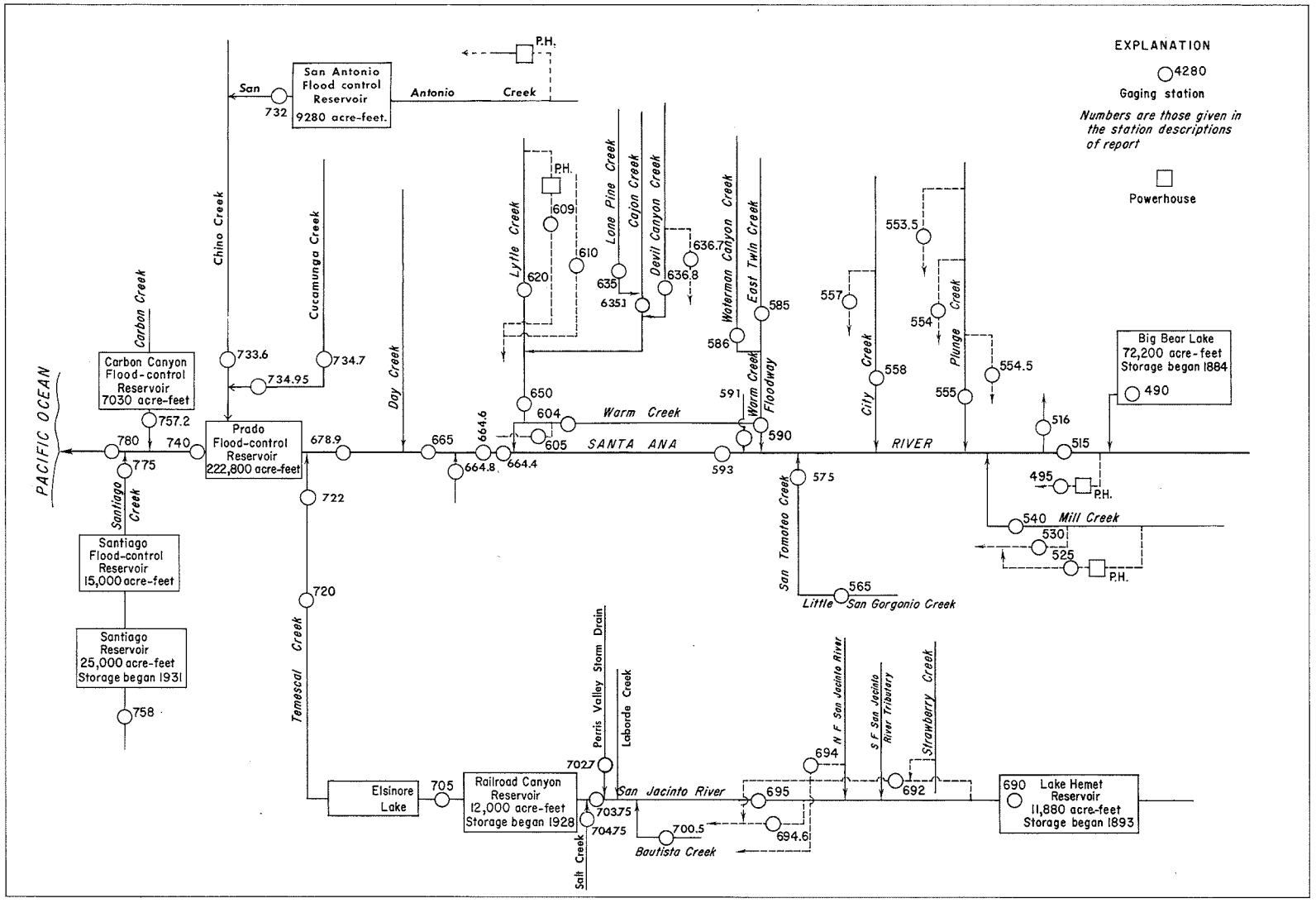

Figure 3.-- Schematic diagram showing diversions and storage in Santa Ana River basin.

11049000 BIG BEAR LAKE NEAR BIG BEAR LAKE, CALIF.

LOCATION.--Lat 34°14'33", long 116°58'33", in SW¼ sec.22, T.2 N., R.1 W., San Bernardino County, at Big Bear Lake Dam on Bear Creek, 4 miles west of town of Big Bear Lake, and 7.5 miles upstream from mouth.

DRAINAGE AREA.--71.5 sq mi (including Baldwin Lake drainage).

PERIOD OF RECORD.--October 1950 to current year in reports of Geological Survey. February 1884 to September 1950 in files of Bear Valley Mutual Water Co.

GAGE.--Nonrecording gage. Datum of gage is 6,670.9 ft above mean sea level (levels by Bear Valley Mutual Water Co.). Prior to 1912 at old dam 200 ft upstream at same datum (spillway at gage height, 52.4 ft).

EXTREMES.--Current year: Maximum contents observed, 67,090 acre-ft May 31; minimum contents, 51,230 acre-ft Oct. 31.
Period of record: Maximum contents unknown, lake spilled in 1916, 1917, 1922, 1923, 1938, 1939, 1969, 1970; lake dry October, November 1898, August to November 1899, October, November 1904.

REMARKS.--Lake is formed by multiple-arch concrete dam, completed in 1912, replacing existing lower dam built in 1884; storage began in spring of 1884. Capacity, 72,200 acre-ft at elevation 6,743.2 ft (top of dam). Capacity table based on survey made in 1883. No dead storage. Water used for irrigation only. See schematic diagram of Santa Ana River basin.

COOPERATION.--Record of contents furnished by Bear Valley Mutual Water Co.

MONTHEND CONTENTS, WATER YEAR OCTOBER 1972 TO SEPTEMBER 1973

Date	Contents (acre-feet)	Change in contents (acre-feet)
Sept. 30	52,430	-
Oct. 31	51,230	-1,200
Nov. 30	51,830	+600
Dec. 31	53,060	+1,230
CAL YR 1972	--	-9,060
Jan. 31	54,320	+1,260
Feb. 28	55,590	+1,270
Mar. 31	58,540	+2,950
Apr. 30	64,010	+5,470
May 31	67,090	+3,080
June 30	65,570	-1,520
July 31	64,010	-1,560
Aug. 31	62,540	-1,470
Sept. 30	60,850	-1,690
WTR YR 1973	--	+8,420

11051500 SANTA ANA RIVER NEAR MENTONE, CALIF.

LOCATION.--Lat 34°06'30", long 117°05'59", in NE¼SW¼SW¼ sec.4, T.1 S., R.2 W., San Bernardino County, on right bank at diversion near mouth of canyon, 1.6 miles upstream from Mill Creek, and 3.2 miles northeast of Mentone.

DRAINAGE AREA.--209 sq mi (including Baldwin Lake drainage).

PERIOD OF RECORD.--July 1896 to current year. Prior to October 1914, observed records not equivalent owing to Greenspot pipeline diversion between sites and exclusion of discharge from Warm Springs Canyon. Monthly discharge only for January 1910, January, February 1916, published in WSP 1315-B.

GAGE.--Water-stage recorder on river; water-stage recorder on powerhouse diversion. Altitude of gage is 1,950 ft (from topographic map). Prior to Sept. 2, 1917, nonrecording gages at several sites within 1.5 miles upstream at various datums. Sept. 3, 1917, to May 27, 1969, water-stage recorder at site 0.2 mile upstream at different datum.

AVERAGE DISCHARGE (River only).--59 years (1914-73), 33.5 cfs (24,240 acre-ft per year).
(Combined river and canal).--77 years, 81.4 cfs (59,000 acre-ft per year).

EXTREMES (River only).--Current year: Maximum discharge, 778 cfs Feb. 11 (gage height, 5.15 ft); no flow many days.
Period of record: Maximum discharge, 52,300 cfs Mar. 2, 1938 (gage height, 14.3 ft, site and datum then in use), on basis of slope-area measurement of maximum flow; no flow at times in some years.
(Combined flow).-- Current year: Maximum discharge, 780 cfs Feb. 11; minimum daily, 21 cfs Dec. 2, 3.
Period of Record: Maximum discharge, 52,300 cfs Mar, 2, 1938; minimum daily, 7.4 cfs Sept. 21, 1971.
Flood of Feb. 23, 1891, 53,700 cfs, from notes furnished by F. C. Finkle, consulting engineer, Los Angeles.

REMARKS.--Records poor. Flow partly regulated by Big Bear Lake (see sta 11049000). For records of combined discharge of Santa Ana River and Southern California Edison Co.'s canal below powerplant No. 2, which diverts above station, see following page. Bear Valley Mutual Water Company pumped 647 acre-ft into canal below canal gage. Prior to Oct. 1, 1952, pumped water entered canal above gage. See schematic diagram of Santa Ana River basin.

COOPERATION.--Eight discharge measurements on Southern California Edison Co.'s canal below powerplant No. 2 furnished by that agency, in connection with a Federal Power Commission project.

DISCHARGE, IN CUBIC FEET PER SECOND, WATER YEAR OCTOBER 1972 TO SEPTEMBER 1973

DAY	OCT	NOV	DEC	JAN	FEB	MAR	APR	MAY	JUN	JUL	AUG	SEP
1	24	0	.25	9.0	4.7	128	118	46	82	4.2	1.9	.78
2	25	0	.32	5.7	5.1	112	116	48	81	4.9	2.1	1.1
3	16	0	.44	5.1	5.7	108	112	37	79	4.6	1.7	1.2
4	5.3	0	64	5.9	4.7	105	110	39	77	3.7	1.1	1.6
5	5.3	0	55	5.3	4.0	101	108	51	75	2.5	1.6	1.1
6	1.6	0	28	5.3	60	191	105	50	73	2.4	1.6	1.3
7	.63	0	44	4.1	61	228	103	64	72	2.3	1.4	.67
8	.03	0	49	2.8	19	231	102	118	72	2.4	1.3	.70
9	.03	0	29	2.5	14	221	100	112	71	2.4	1.4	.64
10	.30	0	22	2.5	12	208	99	110	69	2.1	1.1	1.1
11	.63	20	22	2.5	445	292	97	110	75	2.4	1.0	.78
12	.42	8.6	15	2.4	415	239	96	110	75	1.9	.94	.52
13	.36	8.1	12	2.4	284	233	94	110	74	2.2	1.4	.64
14	.04	28	18	2.4	183	180	93	75	67	2.2	.90	1.1
15	0	22	14	2.4	150	165	90	74	67	2.4	1.4	.55
16	0	70	13	17	125	155	90	72	63	2.4	.98	.98
17	0	61	12	102	109	150	89	69	64	2.0	.94	.61
18	0	25	10	61	98	140	86	48	61	1.9	1.3	1.3
19	.65	15	6.1	118	94	135	86	43	57	2.1	1.6	1.8
20	4.4	6.0	7.0	42	94	144	85	68	56	1.9	1.3	1.7
21	4.1	8.0	6.0	31	85	145	86	107	54	2.2	2.1	.67
22	1.2	3.4	5.0	26	57	139	85	102	52	1.6	1.0	.58
23	.36	1.4	7.4	21	61	134	83	99	52	1.7	1.0	.61
24	0	.86	8.4	15	69	130	80	98	51	2.1	1.1	.70
25	0	0	16	12	72	127	80	69	33	1.0	1.3	.52
26	0	0	11	10	76	122	68	44	4.0	1.4	1.1	.52
27	0	0	5.7	11	83	120	63	57	3.0	2.2	1.2	1.6
28	0	.13	4.6	8.0	194	130	47	47	3.9	2.1	.94	.70
29	0	0	5.5	7.0	------	130	42	41	5.2	1.3	1.1	.52
30	0	0	4.9	5.0	------	128	44	28	5.2	1.8	1.0	.55
31	0	------	5.7	5.1	------	124	------	78	------	2.1	1.0	------
TOTAL	90.35	277.49	501.31	551.4	2,884.2	4,895	2,657	2,224	1,673.3	72.4	39.80	27.14
MEAN	2.91	9.25	16.2	17.8	103	158	88.6	71.7	55.8	2.34	1.28	.90
MAX	25	70	64	118	445	292	118	118	82	4.9	2.1	1.8
MIN	0	0	.25	2.4	4.0	101	42	28	3.0	1.0	.90	.52
AC-FT	179	550	994	1,090	5,720	9,710	5,270	4,410	3,320	144	79	54

CAL YR 1972 TOTAL 2,460.08 MEAN 6.72 MAX 83 MIN 0 AC-FT 4,880
WTR YR 1973 TOTAL 15,893.39 MEAN 43.5 MAX 445 MIN 0 AC-FT 31,520

PEAK DISCHARGE (BASE, 150 CFS)

DATE	TIME	G.H.	DISCHARGE	DATE	TIME	G.H.	DISCHARGE
11-16	1900	2.50	220	2-28	0300	3.63	389
12-4	1700	2.48	214	3-6	2000	4.75	625
1-17	0100	3.10	160	3-11	1400	4.20	440
1-19	0100	3.00	216	3-20	0900	3.35	200
2-11	2000	5.15	778				

11051500 SANTA ANA RIVER NEAR MENTONE, CALIF.--Continued

COMBINED DISCHARGE, IN CUBIC FEET PER SECOND, OF SANTA ANA RIVER AND SOUTHERN CALIFORNIA EDISON CO.'S CANAL NEAR MENTONE, CALIF., WATER YEAR OCTOBER 1972 TO SEPTEMBER 1973

DAY	OCT	NOV	DEC	JAN	FEB	MAR	APR	MAY	JUN	JUL	AUG	SEP
1	29	23	22	23	39	129	164	123	82	49	45	52
2	30	23	21	24	39	113	160	118	81	49	45	52
3	36	23	21	23	40	109	157	116	79	49	48	51
4	28	23	82	24	42	106	154	119	77	48	47	53
5	29	23	63	22	38	118	151	129	75	46	48	52
6	27	23	44	23	81	215	147	116	73	47	47	51
7	23	23	53	22	87	229	148	120	72	47	46	51
8	22	24	51	26	68	232	150	118	72	48	45	51
9	42	23	38	34	62	221	147	112	71	47	45	51
10	48	23	33	32	59	208	147	110	69	48	44	51
11	49	53	31	32	464	293	146	110	75	48	43	50
12	49	35	29	30	416	239	145	110	75	47	42	50
13	42	32	27	30	285	233	143	116	74	47	43	49
14	26	44	30	29	184	180	142	116	70	46	47	49
15	24	34	28	29	151	187	139	115	70	46	59	50
16	24	87	30	37	126	192	137	115	63	46	60	52
17	25	75	31	127	110	179	136	114	64	45	52	52
18	26	54	30	97	99	168	136	106	61	45	50	53
19	27	42	29	131	95	164	136	105	57	44	50	53
20	32	31	28	64	95	174	134	105	56	44	50	54
21	30	33	28	40	97	175	134	107	54	44	52	54
22	26	29	27	53	100	169	134	102	52	44	56	52
23	24	27	27	56	105	163	132	99	52	42	56	52
24	24	26	26	53	107	159	130	98	51	40	56	52
25	24	25	25	50	110	156	130	100	52	39	56	51
26	24	25	27	48	112	151	131	102	48	39	55	49
27	26	25	26	46	104	149	136	97	50	40	54	49
28	25	24	27	44	195	158	127	91	50	40	53	49
29	24	23	24	43	------	159	127	91	50	40	52	49
30	24	22	24	42	------	165	126	88	50	41	52	48
31	23	------	24	40	------	170	------	86	------	42	52	------
TOTAL	912	977	1,006	1,374	3,510	5,463	4,226	3,354	1,925	1,387	1,550	1,532
MEAN	29.4	32.6	32.5	44.3	125	176	141	108	64.2	44.7	50.0	51.1
MAX	49	87	82	131	464	293	164	129	82	49	60	54
MIN	22	22	21	22	38	106	126	86	48	39	42	48
AC-FT	1,810	1,940	2,000	2,730	6,960	10,840	8,380	6,650	3,820	2,750	3,070	3,040

CAL YR 1972 TOTAL 11,803 MEAN 32.2 MAX 87 MIN 19 AC-FT 23,410
WTR YR 1973 TOTAL 27,216 MEAN 74.6 MAX 464 MIN 21 AC-FT 53,980

PEAK DISCHARGE (BASE, 150 CFS)

DATE	TIME	DISCHARGE	DATE	TIME	DISCHARGE
11-16	1900	222	2-28	0300	390
12-4	1700	216	3-6	2000	626
1-17	0100	161	3-11	1400	440
1-19	0100	217	3-20	0900	230
2-11	2000	780			

11051600 SANTA ANA RIVER SPREADING DIVERSION NEAR MENTONE, CALIF.

LOCATION.--Lat 34°06'12", long 117°06'37", in SW¼NW¼NE¼ sec.8, T.1 S., R.2 W., San Bernardino County, on diversion channel 0.8 mile downstream from Southern California Edison Co.'s powerhouse No. 3, and 2.4 miles northeast of Mentone.

PERIOD OF RECORD.--October 1951 to current year.

GAGE.--Water-stage recorder and Parshall flume control. Altitude of gage is 1,840 ft, revised (from topographic map).

EXTREMES.--Period of record: Maximum daily discharge, 141 cfs Mar. 16, 1973; no flow for long periods in each year.

REMARKS.--Records good. Water is diverted from Santa Ana River at diversion dam 0.8 mile upstream, for spreading on debris cone downstream from mouth of Santa Ana River Canyon. Diversion began prior to 1951.

DISCHARGE, IN CUBIC FEET PER SECOND, WATER YEAR OCTOBER 1972 TO SEPTEMBER 1973

DAY	OCT	NOV	DEC	JAN	FEB	MAR	APR	MAY	JUN	JUL	AUG	SEP
1		0	.02	0	37	97	51	69	60	0		
2		0	.02	0	14	96	48	69	45	0		
3		0	.04	0	.18	91	47	61	42	0		
4		0	.06	0	.16	98	48	64	38	0		
5		0	13	0	25	87	47	71	33	0		
6		0	13	0	64	59	49	68	33	0		
7		0	34	0	65	40	66	70	25	0		
8		0	40	0	58	3.6	72	76	21	0		
9		0	28	17	55	70	72	84	30	0		
10		0	21	7.4	47	100	81	80	31	.08		
11		14	22	.18	32	62	95	57	31	.38		
12		8.6	15	.16	21	93	93	35	31	.36		
13		8.1	5.6	.09	62	108	96	35	32	.41		
14		8.6	.25	.09	88	102	93	44	29	.37		
15		25	.05	.09	81	127	83	33	29	.25		
16		18	.02	.12	92	141	78	33	29	0		
17		29	.04	34	93	137	77	41	28	0		
18		22	.04	32	98	128	75	53	26	0		
19		18	.04	60	97	118	73	54	18	0		
20		4.4	.04	51	75	63	77	48	14	0		
21		.06	.04	49	67	60	75	36	27	0		
22		.05	.04	42	66	96	75	33	25	0		
23		.05	.01	37	67	93	78	51	29	0		
24		.05	0	36	66	68	83	50	31	0		
25		.04	0	34	64	61	87	40	18	0		
26		.03	0	16	63	59	79	34	4.2	0		
27		.03	0	.02	63	55	74	32	.30	0		
28		.03	0	0	71	62	74	46	.09	0		
29		.04	0	14	------	54	71	42	0	0		
30		.03	0	38	------	52	74	28	0	0		
31		------	0	37	------	51	------	57	------	0		------
TOTAL	0	156.11	192.31	505.15	1,631.34	2,531.6	2,191	1,594	759.59	1.85	0	0
MEAN	0	5.20	6.20	16.3	58.3	81.7	73.0	51.4	25.3	.060	0	0
MAX	0	29	40	60	98	141	96	84	60	.41	0	0
MIN	0	0	0	0	.16	3.6	47	28	0	0	0	0
AC-FT	0	310	381	1,000	3,240	5,020	4,350	3,160	1,510	3.7	0	0

CAL YR 1972 TOTAL 1,241.08 MEAN 3.39 MAX 40 MIN 0 AC-FT 2,460
WTR YR 1973 TOTAL 9,562.95 MEAN 26.2 MAX 141 MIN 0 AC-FT 18,970

11054000 MILL CREEK NEAR YUCAIPA, CALIF.

LOCATION.--Lat 34°05'27", long 117°02'12", in NW¼NE¼NE¼ sec.13, T.1 S., R.2 W., San Bernardino County, on left bank 50 ft downstream from bridge on State Highway 190-D, 3.9 miles north of Yucaipa, and 5.3 miles upstream from mouth.

DRAINAGE AREA.--42.4 sq mi.

PERIOD OF RECORD.--January 1919 to September 1938, October 1947 to current year. Monthly figures only for April and May 1923, published in WSP 1315-B. Prior to October 1954, published as "near Craftonville."

GAGE.--Water-stage recorder on creek; water-stage recorder and sharp-crested weir on power canal No. 1; water-stage recorder and Parshall flume on power canals Nos. 2 and 3. Datum of gage is 2,916.36 ft above mean sea level (Southern California Edison Co. bench mark). See WSP 1735 for history of changes prior to Mar. 2, 1938.

AVERAGE DISCHARGE (Creek only).--45 years, 13.5 cfs (9,790 acre-ft per year).
(Combined creek and canals).--45 years, 34.3 cfs (24,840 acre-ft per year).

EXTREMES (Creek only).--Current year: Maximum discharge, 92 cfs Feb. 11 (gage height, 7.26 ft); maximum gage height, 10.73 ft July 31 (due to construction in channel); no flow Oct. 1-28.
Period of record: Maximum discharge, 35,400 cfs Jan. 25, 1969 (gage height, 16.8 ft, from floodmark), from rating curve extended above 1,100 cfs on basis of 2 field estimates at gage height 14.5 ft and slope-area measurement of maximum flow; no flow at times in some years.
(Combined flow).--Current year: Maximum discharge, 106 cfs Feb. 11; minimum daily, 11 cfs Dec. 15-21.
Period of record: Maximum discharge, 35,400 cfs Jan. 25, 1969; minimum daily, 2.7 cfs Feb. 23, 1949.

REMARKS.--Records poor. No regulation above station. Mill Creek power canals Nos. 1, 2, and 3 divert from points 100 ft, 3 miles, and 6 miles above station, respectively. Combined flow of Mill Creek and Mill Creek power canals Nos. 1, 2, and 3 is given on following page. See schematic diagram of Santa Ana River basin.

COOPERATION.--Water-stage recorder graph and 16 discharge measurements for Mill Creek power canals Nos. 2 and 3 furnished by Southern California Edison Co., in connection with a Federal Power Commission project.

DISCHARGE, IN CUBIC FEET PER SECOND, WATER YEAR OCTOBER 1972 TO SEPTEMBER 1973

DAY	OCT	NOV	DEC	JAN	FEB	MAR	APR	MAY	JUN	JUL	AUG	SEP
1	0	.09	.02	1.0	5.0	10	6.0	57	48	6.0	7.0	2.0
2	0	.10	.02	1.0	4.0	7.0	3.0	57	45	6.0	1.0	2.0
3	0	.10	.01	1.0	2.5	5.0	.90	58	45	5.0	2.0	2.0
4	0	.10	6.0	1.0	.50	6.0	.90	47	44	6.0	2.0	1.5
5	0	.10	3.0	1.0	5.0	5.2	.90	35	44	3.0	2.0	1.0
6	0	.10	.50	1.0	18	17	.80	35	42	3.0	2.0	2.0
7	0	.10	.50	1.0	11	29	.70	35	42	4.0	4.0	2.0
8	0	.10	.50	1.0	15	26	.80	37	41	4.0	4.0	3.0
9	0	.10	.43	1.0	5.0	18	.70	37	37	1.0	3.0	3.0
10	0	.10	.43	1.0	8.0	14	10	39	37	1.0	2.0	1.0
11	0	.30	.40	2.0	59	26	13	40	35	2.0	1.0	2.0
12	0	.10	.40	3.0	25	15	12	40	36	1.0	.70	2.0
13	0	.20	.40	3.0	17	15	17	40	32	1.0	.50	2.0
14	0	1.0	.40	3.0	11	13	19	41	27	1.0	.50	2.0
15	0	3.2	.40	4.0	7.0	11	20	42	25	1.0	.50	2.0
16	0	2.0	.40	4.0	6.0	10	20	44	21	1.0	2.0	2.0
17	0	1.0	.40	4.0	6.0	9.3	20	44	18	1.0	2.0	1.0
18	0	1.6	.40	7.0	6.0	8.7	18	46	15	1.0	2.0	1.0
19	0	1.0	.40	9.0	6.0	8.4	19	45	15	1.0	2.0	1.0
20	0	.20	.40	16	6.0	11	21	44	16	1.0	2.0	1.0
21	0	.20	.40	10	4.0	11	21	42	14	1.0	2.0	1.0
22	0	.70	.35	9.0	3.0	10	19	42	8.0	1.0	1.0	2.0
23	0	.60	.35	9.0	3.0	5.2	13	58	9.0	2.0	1.0	1.0
24	0	.60	.35	9.0	3.0	4.5	13	57	9.0	2.0	1.0	3.0
25	0	.50	.35	9.0	4.0	4.1	18	45	10	2.0	3.0	4.0
26	0	.40	.35	8.0	3.0	4.1	23	45	11	2.0	1.0	1.0
27	0	.30	.35	8.0	3.0	4.7	30	47	11	3.0	1.0	1.0
28	0	.05	.35	8.0	16	4.5	47	49	10	3.0	2.0	2.0
29	.05	.04	.35	8.0	------	4.5	51	49	6.0	3.0	1.0	2.0
30	.08	.03	.35	9.0	------	4.5	55	50	6.0	3.0	1.0	4.0
31	.15	------	1.0	6.0	------	6.0	------	49	------	6.0	2.0	------
TOTAL	.28	15.01	19.96	158.0	262.00	327.7	493.70	1,396	759.0	78.0	58.20	56.5
MEAN	.009	.50	.64	5.10	9.36	10.6	16.5	45.0	25.3	2.52	1.88	1.88
MAX	.15	3.2	6.0	16	59	29	55	58	48	6.0	7.0	4.0
MIN	0	.03	.01	1.0	.50	4.1	.70	35	6.0	1.0	.50	1.0
AC-FT	.6	30	40	313	520	650	979	2,770	1,510	155	115	112

CAL YR 1972 TOTAL 148.89 MEAN .41 MAX 7.9 MIN 0 AC-FT 295
WTR YR 1973 TOTAL 3,624.35 MEAN 9.93 MAX 59 MIN 0 AC-FT 7,190

PEAK DISCHARGE (BASE, 100 CFS).--No peak above base.

11054000 MILL CREEK NEAR YUCAIPA, CALIF.--Continued

COMBINED DISCHARGE, IN CUBIC FEET PER SECOND, OF MILL CREEK AND MILL CREEK POWER CANALS NOS. 1, 2, AND 3 NEAR YUCAIPA, CALIF., WATER YEAR OCTOBER 1972 TO SEPTEMBER 1973

DAY	OCT	NOV	DEC	JAN	FEB	MAR	APR	MAY	JUN	JUL	AUG	SEP
1	13	14	12	13	21	21	28	62	82	43	33	28
2	14	14	12	12	21	20	28	62	81	42	33	28
3	14	14	12	14	21	20	30	63	80	41	33	28
4	14	14	17	14	21	22	30	64	79	41	32	28
5	14	14	15	14	21	21	29	64	78	40	32	28
6	13	14	14	14	33	34	30	64	77	40	32	28
7	13	14	13	14	24	44	31	64	76	40	32	27
8	13	14	13	14	27	41	31	65	76	39	32	27
9	13	14	12	15	23	31	27	66	75	38	31	27
10	14	14	12	15	23	31	26	66	74	38	30	27
11	14	18	12	16	76	43	26	67	72	37	30	27
12	14	16	12	16	38	32	26	68	72	36	30	27
13	14	16	12	16	29	34	25	68	71	36	30	27
14	14	16	12	16	22	31	25	69	69	36	29	27
15	14	14	11	17	18	28	25	70	65	36	28	27
16	13	16	11	17	17	28	25	71	61	36	28	26
17	14	15	11	18	16	28	25	72	57	36	28	26
18	14	15	11	19	16	29	25	74	53	35	28	26
19	14	15	11	19	16	28	25	74	51	34	28	26
20	16	15	11	27	16	33	26	75	49	34	28	26
21	15	15	11	22	16	31	26	75	48	34	28	26
22	14	14	15	21	16	31	26	76	47	34	28	26
23	14	14	15	21	16	25	26	76	47	34	28	26
24	14	14	14	21	16	25	26	77	46	33	28	26
25	14	13	14	21	16	27	28	78	46	33	28	26
26	13	13	14	21	16	28	31	78	46	33	28	25
27	13	13	14	21	16	28	34	79	45	33	28	25
28	14	13	14	21	29	27	52	80	45	33	28	25
29	14	13	14	21	------	27	56	80	44	33	28	25
30	14	12	14	21	------	28	60	80	44	33	28	24
31	13	------	14	21	------	28	------	82	------	33	28	------
TOTAL	428	430	399	552	640	904	908	2,209	1,856	1,124	915	795
MEAN	13.8	14.3	12.9	17.8	22.9	29.2	30.3	71.3	61.9	36.3	29.5	26.5
MAX	16	18	17	27	76	44	60	82	82	43	33	28
MIN	13	12	11	12	16	20	25	62	44	33	28	24
AC-FT	849	853	791	1,090	1,270	1,790	1,800	4,380	3,680	2,230	1,810	1,580

CAL YR 1972 TOTAL 6,022 MEAN 16.5 MAX 25 MIN 11 AC-FT 11,940
WTR YR 1973 TOTAL 11,160 MEAN 30.6 MAX 82 MIN 11 AC-FT 22,140

PEAK DISCHARGE (BASE, 100 CFS).--Feb. 11 (2200) 106 cfs.

11055500 PLUNGE CREEK NEAR EAST HIGHLANDS, CALIF.

LOCATION.--Lat 34°07'06", long 117°08'27", in SW¼NE¼NE¼ sec.1, T.1 S., R.3 W., San Bernardino County, on left bank at mouth of canyon at crossing of North Fork ditch siphon, 1.8 miles northeast of East Highlands.

DRAINAGE AREA.--16.9 sq mi.

PERIOD OF RECORD.--January 1919 to current year; combined records of creek and diversions, March 1951 to current year.

GAGE.--Water-stage recorder in concrete shelter; water-stage recorder and weir on upper diversion; water-stage recorder and concrete-lined canal on middle diversion; crest-stage gage and sharp-crested weir on lower diversion. Altitude of gage is 1,590 ft (from topographic map). Prior to Oct. 1, 1969, at datum 4.00 ft higher.

AVERAGE DISCHARGE (Creek only).--54 years, 6.21 cfs (4,500 acre-ft per year).
(Combined creek and diversions).--22 years, 7.83 cfs (5,670 acre-ft per year).

EXTREMES (Creek only).--Current year: Maximum discharge, 466 cfs Feb. 11 (gage height, 4.20 ft); minimum daily, 0.01 cfs Aug. 7, 8.
Period of record: Maximum discharge, 5,340 cfs Mar. 2, 1938, on basis of slope-area measurement of maximum flow; no flow for part of most years.
(Combined flow).--Current year: Maximum discharge, 466 cfs Feb. 11; minimum daily, 0.80 cfs Oct. 1.
Period of record: Maximum discharge, 4,770 cfs Dec. 6, 1966; no flow Nov. 12, 1964, Sept. 29, 1965.

REMARKS.--Records fair. No regulation above station. Diversion from Alder Creek to Upper Plunge Creek area was active 1904-67. Diversions for irrigation are made at sites 0.5, 1.0, and 2.5 miles above station. Water has been diverted above station for irrigation during entire period of record. Combined discharge of Plunge Creek and upper, middle, and lower diversions is given on following page. (No flow in lower diversion since May 29, 1966). See schematic diagram of Santa Ana River basin.

DISCHARGE, IN CUBIC FEET PER SECOND, WATER YEAR OCTOBER 1972 TO SEPTEMBER 1973

DAY	OCT	NOV	DEC	JAN	FEB	MAR	APR	MAY	JUN	JUL	AUG	SEP
1	.10	.18	2.8	2.6	6.2	34	30	9.8	3.4	.13	.12	.52
2	.10	.18	2.3	2.7	5.8	21	27	7.7	3.3	.13	.04	.52
3	.12	.18	2.0	3.0	6.5	17	25	7.2	3.2	.13	.03	.52
4	.12	.18	28	3.0	6.8	25	24	7.4	3.1	.12	.03	.57
5	.12	.16	14	3.2	5.8	16	24	15	3.0	.12	.04	.68
6	.12	.16	12	3.3	38	54	25	12	2.9	.12	.02	.68
7	.12	.16	14	3.3	14	100	26	8.6	2.4	.12	.01	.52
8	.12	.18	18	3.6	12	60	26	8.3	1.9	.11	.01	.52
9	.14	.20	8.5	4.0	6.8	48	25	7.7	1.6	.11	.17	.52
10	.18	.20	9.7	3.2	11	32	24	6.9	1.4	.11	.68	.52
11	.20	6.1	8.5	3.8	233	94	23	6.9	1.1	.11	.68	.62
12	.20	2.4	5.8	3.8	121	75	23	7.4	.97	.11	.62	.68
13	.20	1.8	4.7	3.5	133	81	21	6.0	.83	.10	.62	.57
14	.20	15	4.0	3.2	77	63	21	5.5	.72	.10	.68	.57
15	.20	4.0	3.5	3.0	36	48	23	5.5	.61	.10	.62	.57
16	.18	43	3.1	38	21	34	21	5.3	.53	.10	.52	.57
17	.16	6.6	2.7	59	17	30	21	4.5	.46	.10	.57	.57
18	.16	8.8	2.6	33	17	28	20	5.5	.40	.10	.52	.47
19	.22	3.8	2.5	73	17	22	19	4.5	.35	.10	.43	.43
20	.33	2.7	2.5	22	16	31	16	4.1	.31	.10	.47	.47
21	.33	2.2	2.5	18	15	22	16	3.7	.27	.08	.52	.47
22	.27	2.7	2.4	9.7	14	28	15	3.9	.24	.10	.52	.52
23	.30	3.1	2.4	6.0	14	27	14	3.6	.21	.10	.43	.62
24	.20	2.9	2.4	5.3	13	26	12	3.7	.19	.06	.39	.62
25	.16	3.1	2.4	7.3	13	25	12	4.7	.17	.05	.47	.52
26	.16	2.3	2.4	7.9	14	24	11	4.5	.16	.04	.57	.39
27	.20	1.9	2.4	7.6	14	38	10	3.9	.14	.04	.68	.27
28	.16	1.7	2.5	7.0	86	46	9.2	3.8	.14	.04	.68	.24
29	.16	1.8	2.5	6.8	------	36	8.6	3.7	.14	.04	.57	.21
30	.18	2.9	2.5	8.2	------	33	11	3.6	.14	.05	.52	.21
31	.18	------	2.6	7.3	------	32	------	3.5	------	.08	.52	------
TOTAL	5.59	120.58	178.2	365.3	983.9	1,250	582.8	188.4	34.28	2.90	12.75	15.16
MEAN	.18	4.02	5.75	11.8	35.1	40.3	19.4	6.08	1.14	.094	.41	.51
MAX	.33	43	28	73	233	100	30	15	3.4	.13	.68	.68
MIN	.10	.16	2.0	2.6	5.8	16	8.6	3.5	.14	.04	.01	.21
AC-FT	11	239	353	725	1,950	2,480	1,160	374	68	5.8	25	30

CAL YR 1972 TOTAL 560.26 MEAN 1.53 MAX 43 MIN 0 AC-FT 1,110
WTR YR 1973 TOTAL 3,739.86 MEAN 10.2 MAX 233 MIN .01 AC-FT 7,420

PEAK DISCHARGE (BASE, 130 CFS)

DATE	TIME	G.H.	DISCHARGE	DATE	TIME	G.H.	DISCHARGE
11-14	1400	3.31	172	2-11	2000	4.20	466
11-16	1800	3.40	209	2-13	0300	3.48	222
12-4	1600	3.75	335	2-28	0300	3.42	232
1-16	2300	3.49	282	3-7	0100	3.74	317
1-19	0100	3.75	404	3-11	1200	3.52	242

11055500 PLUNGE CREEK NEAR EAST HIGHLANDS, CALIF.--Continued

COMBINED DISCHARGE, IN CUBIC FEET PER SECOND, OF PLUNGE CREEK AND DIVERSIONS NEAR EAST HIGHLANDS, CALIF., WATER YEAR OCTOBER 1972 TO SEPTEMBER 1973

DAY	OCT	NOV	DEC	JAN	FEB	MAR	APR	MAY	JUN	JUL	AUG	SEP
1	.80	.93	2.8	2.6	6.2	34	30	13	6.7	2.8	2.0	1.6
2	.81	.93	2.3	2.7	5.8	21	27	11	6.6	2.8	1.7	1.6
3	.83	.93	2.0	3.0	6.5	17	25	11	6.5	2.8	1.6	1.6
4	.85	.93	28	3.0	6.8	25	24	11	6.4	2.8	1.6	1.7
5	.84	.91	14	3.2	5.8	16	24	19	6.3	2.8	1.6	1.8
6	.83	.91	12	3.3	38	54	25	16	5.9	2.8	1.6	1.8
7	.84	.91	14	3.3	14	100	26	12	5.4	2.8	1.6	1.6
8	.85	.92	18	3.6	12	60	26	12	5.0	2.7	1.6	1.6
9	.88	.94	8.5	4.0	6.8	48	25	11	4.7	2.7	1.6	1.6
10	.91	.93	9.7	3.2	11	32	24	10	4.5	2.3	1.8	1.6
11	.94	6.4	8.5	3.8	233	94	23	10	4.2	2.1	1.8	1.7
12	.95	2.4	5.8	3.8	121	75	23	11	4.0	1.9	1.7	1.8
13	.94	2.2	4.7	3.5	133	81	21	9.3	3.8	1.9	1.7	1.7
14	.94	15	4.0	3.2	77	63	21	8.8	3.6	1.8	1.8	1.7
15	.94	4.0	3.5	3.0	36	48	23	8.8	3.5	1.8	1.7	1.7
16	.93	43	3.1	38	21	34	21	8.6	3.4	1.8	1.6	1.7
17	.92	6.6	2.7	59	17	30	21	7.8	3.4	1.7	1.7	1.7
18	.92	8.8	2.6	33	17	28	20	8.7	3.2	1.7	1.6	1.6
19	1.0	3.8	2.5	73	17	22	19	7.6	3.2	1.7	1.5	1.5
20	1.1	2.7	2.5	22	16	31	17	7.4	3.0	1.7	1.6	1.5
21	1.1	2.2	2.5	18	15	22	18	7.0	3.0	1.8	1.6	1.5
22	.81	2.7	2.4	9.7	14	28	18	7.2	2.8	1.8	1.6	1.6
23	.85	3.1	2.4	6.0	14	27	17	6.9	2.8	1.8	1.5	1.7
24	.94	2.9	2.4	5.3	13	26	15	7.0	2.8	1.7	1.5	1.8
25	.91	3.1	2.4	7.3	13	25	15	8.0	2.7	1.7	1.6	1.8
26	.91	2.3	2.4	7.9	14	24	14	7.8	2.7	1.7	1.7	2.1
27	.95	1.9	2.4	7.6	14	38	13	7.2	2.5	1.7	1.8	1.7
28	.91	1.7	2.5	7.0	86	46	13	7.0	2.5	1.8	1.8	1.3
29	.91	1.8	2.5	6.8	------	36	12	6.9	2.6	1.8	1.7	1.3
30	.93	2.9	2.5	8.2	------	33	14	6.9	2.7	1.8	1.6	1.3
31	.92	------	2.6	7.3	------	32	------	6.8	------	2.0	1.6	------
TOTAL	28.16	128.74	178.2	365.3	983.9	1,250	614	292.7	120.4	65.0	51.4	49.2
MEAN	.91	4.29	5.75	11.8	35.1	40.3	20.5	9.44	4.01	2.10	1.66	1.64
MAX	1.1	43	28	73	233	100	30	19	6.7	2.8	2.0	2.1
MIN	.80	.91	2.0	2.6	5.8	16	12	6.8	2.5	1.7	1.5	1.3
AC-FT	56	255	353	725	1,950	2,480	1,220	581	239	129	102	98

CAL YR 1972 TOTAL 882.14 MEAN 2.41 MAX 43 MIN .58 AC-FT 1,750
WTR YR 1973 TOTAL 4,127.00 MEAN 11.3 MAX 233 MIN .80 AC-FT 8,190

PEAK DISCHARGE (BASE, 130 CFS).--(Same as those listed on previous page).

11055800 CITY CREEK NEAR HIGHLAND, CALIF.

LOCATION.--Lat 34°08'38", long 117°11'16", in SE¼SW¼NW¼ sec.27, T.1 N., R.3 W., San Bernardino County, on right bank 0.6 mile upstream from Highland Avenue, and 1.5 miles northeast of Highland.

DRAINAGE AREA.--19.6 sq mi.

PERIOD OF RECORD.--October 1919 to current year; combined records of creek and canal, June 1924 to current year.

GAGE.--Water-stage recorder on creek; water-stage recorder on canal. Altitude of gage is 1,580 ft (from topographic map). Prior to Mar. 1, 1939, at site 0.2 mile downstream at different datum.

AVERAGE DISCHARGE (Creek only).--54 years, 8.85 cfs (6,410 acre-ft per year).
(Combined).--49 years, 10.6 cfs (7,680 acre-ft per year).

EXTREMES (Creek only).--Current year: Maximum discharge, 492 cfs Feb. 11 (gage height, 5.37 ft); minimum daily, 0.02 cfs Oct. 1-3, 8-17.
Period of record: Maximum discharge, 7,000 cfs Feb. 25, 1969 (gage height, 9.39 ft), from rating curve extended above 580 cfs on basis of slope-area measurement at gage height 8.83 ft; no flow for several months in some years.
(Combined).--Current year: Maximum discharge, 492 cfs Feb. 11; minimum daily, 0.64 cfs Oct. 1.
Period of record: Maximum discharge, 7,000 cfs Feb. 25, 1969; no flow at times in some years.

REMARKS.--Records poor. No regulation above station. City Creek Water Co.'s canal has diverted from point 0.5 mile above station for irrigation throughout period of record. See schematic diagram of Santa Ana River basin. Combined discharge of City Creek and canal is given on following page.

DISCHARGE, IN CUBIC FEET PER SECOND, WATER YEAR OCTOBER 1972 TO SEPTEMBER 1973

DAY	OCT	NOV	DEC	JAN	FEB	MAR	APR	MAY	JUN	JUL	AUG	SEP
1	.02	2.0	1.6	3.0	5.3	23	26	11	3.3	1.2	.40	.50
2	.02	2.0	1.6	3.0	5.2	18	24	10	3.2	1.4	.60	.50
3	.02	2.0	1.6	3.4	5.2	16	23	9.2	4.5	1.5	.90	.50
4	.05	2.1	20	3.8	5.2	18	20	8.8	5.2	1.5	.80	.30
5	.05	2.1	15	3.6	5.2	15	19	18	4.4	1.5	.60	.20
6	.05	2.1	5.7	3.6	33	26	18	14	3.1	1.3	.40	.30
7	.05	2.1	10	3.4	12	73	17	10	3.1	1.1	.40	.60
8	.02	2.6	10	3.4	10	61	16	6.6	3.0	1.1	.40	.50
9	.02	2.6	7.5	4.2	8.8	59	15	6.0	3.2	1.2	.70	.50
10	.02	2.1	5.4	4.4	11	50	15	5.4	3.0	1.3	.50	.40
11	.02	11	4.0	4.0	248	102	14	4.9	2.9	1.3	.50	.30
12	.02	6.6	3.5	3.8	129	66	14	4.4	2.7	1.2	.60	.30
13	.02	4.9	3.2	3.6	85	58	14	4.2	2.6	1.0	.50	.30
14	.02	15	3.0	3.4	40	50	13	4.4	2.1	.80	.50	.30
15	.02	13	3.0	3.2	32	44	13	4.2	2.0	.70	.60	.30
16	.02	31	3.0	11	25	36	13	4.1	2.0	.70	.50	.20
17	.02	12	3.0	22	18	30	13	4.0	2.0	.70	.60	.30
18	1.0	6.9	3.0	22	15	27	13	4.0	2.1	.90	.90	.30
19	6.5	6.0	3.0	56	15	26	12	3.7	2.3	.90	1.0	.30
20	4.0	4.4	3.0	18	14	44	12	3.7	2.9	.70	1.0	.30
21	3.0	3.4	2.8	13	14	39	12	3.5	3.8	.60	.90	.50
22	2.5	2.6	2.7	10	13	44	12	3.5	3.7	.40	.90	.50
23	2.3	2.1	2.4	8.4	12	37	12	3.7	2.5	.40	1.0	.50
24	2.2	2.0	2.4	7.2	12	35	12	3.7	1.8	.70	1.0	.50
25	2.1	2.0	2.5	6.3	11	31	12	3.7	1.6	.90	.80	.60
26	2.0	1.8	2.8	6.0	10	30	12	4.5	1.4	1.1	.60	.70
27	2.0	1.7	3.0	6.0	10	28	12	4.0	1.0	1.1	.40	.70
28	2.0	1.7	3.0	5.5	53	36	12	4.1	1.1	1.0	.50	.70
29	2.0	1.6	3.0	5.5	------	37	11	4.1	1.4	.90	.70	.70
30	2.0	1.6	3.0	5.5	------	31	11	3.9	1.3	.80	.80	.70
31	2.0	------	3.0	5.4	------	27	------	3.6	------	.50	.60	------
TOTAL	36.06	153.0	140.7	261.6	856.9	1,217	442	182.9	79.2	30.40	20.60	13.30
MEAN	1.16	5.10	4.54	8.44	30.6	39.3	14.7	5.90	2.64	.98	.66	.44
MAX	6.5	31	20	56	248	102	26	18	5.2	1.5	1.0	.70
MIN	.02	1.6	1.6	3.0	5.2	15	11	3.5	1.0	.40	.40	.20
AC-FT	72	303	279	519	1,700	2,410	877	363	157	60	41	26

CAL YR 1972 TOTAL 679.40 MEAN 1.86 MAX 31 MIN 0 AC-FT 1,350
WTR YR 1973 TOTAL 3,433.66 MEAN 9.41 MAX 248 MIN .02 AC-FT 6,810

PEAK DISCHARGE (BASE, 150 CFS)

DATE	TIME	G.H.	DISCHARGE	DATE	TIME	G.H.	DISCHARGE
1-19	0100	4.32	152	3-7	0015	4.34	158
2-11	0830	5.37	492	3-11	1515	4.34	158

11055800 CITY CREEK NEAR HIGHLAND, CALIF.--Continued

COMBINED DISCHARGE, IN CUBIC FEET PER SECOND, OF CITY CREEK AND CITY CREEK WATER CO.'S CANAL NEAR HIGHLAND, CALIF., WATER YEAR OCTOBER 1972 TO SEPTEMBER 1973

DAY	OCT	NOV	DEC	JAN	FEB	MAR	APR	MAY	JUN	JUL	AUG	SEP
1	.64	2.0	1.6	3.0	5.3	23	26	11	5.2	2.9	2.1	1.6
2	.82	2.0	1.6	3.0	5.2	18	24	10	5.2	3.0	2.0	1.6
3	1.0	2.0	1.6	3.4	5.2	16	23	9.2	5.2	3.0	2.0	1.6
4	1.0	2.1	20	3.8	5.2	18	20	8.8	5.2	2.9	2.0	1.5
5	1.0	2.1	15	3.6	5.2	15	19	18	5.2	2.9	1.9	1.6
6	1.0	2.1	5.7	3.6	33	26	18	14	5.3	2.8	1.7	1.5
7	1.2	2.1	10	3.4	12	73	17	10	5.0	2.8	1.7	1.5
8	1.3	2.6	10	3.4	10	61	16	8.4	4.9	2.8	1.7	1.6
9	1.5	2.6	7.5	4.2	8.8	59	15	7.6	5.0	2.7	1.9	1.6
10	1.8	2.1	5.4	4.4	11	50	15	7.0	4.8	2.7	1.8	1.6
11	1.9	11	4.0	4.0	248	102	14	6.7	4.8	2.6	1.8	1.6
12	2.0	6.6	3.5	3.8	129	66	14	6.2	4.7	2.6	1.8	1.6
13	2.1	4.9	3.2	3.6	85	58	14	5.8	4.6	2.6	1.8	1.6
14	2.1	15	3.0	3.4	40	50	13	5.9	4.6	2.5	1.8	1.6
15	2.1	13	3.0	3.2	32	44	13	5.8	4.5	2.5	1.8	1.6
16	2.1	31	3.0	11	25	36	13	5.7	4.5	2.5	1.7	1.6
17	2.1	12	3.0	22	18	30	13	5.6	4.5	2.4	1.7	1.6
18	3.0	6.9	3.0	22	15	27	13	5.6	4.3	2.4	1.8	1.6
19	6.5	6.0	3.0	56	15	26	12	5.5	4.1	2.4	1.7	1.6
20	4.0	4.4	3.0	18	14	44	12	5.5	3.8	2.3	1.7	1.7
21	3.0	3.4	3.0	13	14	39	12	5.4	3.8	2.3	1.7	2.1
22	2.5	2.6	3.0	10	13	44	12	5.4	3.7	2.3	1.7	2.3
23	2.3	2.1	3.0	8.4	12	37	12	5.5	3.3	2.2	1.7	2.6
24	2.2	2.0	3.0	7.2	12	35	12	5.5	3.6	2.2	1.7	2.6
25	2.1	2.0	3.0	6.3	11	31	12	5.8	3.4	2.2	1.7	2.2
26	2.0	1.8	3.0	6.0	10	30	12	5.5	3.2	2.2	1.6	2.0
27	2.0	1.7	3.0	6.0	10	28	12	5.5	2.9	2.2	1.6	1.9
28	2.0	1.7	3.0	5.5	53	36	12	5.5	3.1	2.1	1.6	1.9
29	2.0	1.6	3.0	5.5	------	37	11	5.5	3.1	2.1	1.6	1.9
30	2.0	1.6	3.0	5.5	------	31	11	5.4	3.1	2.1	1.6	1.9
31	2.0	------	3.0	5.4	------	27	------	5.3	------	2.1	1.6	------
TOTAL	63.26	153.0	143.1	261.6	856.9	1,217	442	222.6	128.6	77.3	54.5	53.2
MEAN	2.04	5.10	4.62	8.44	30.6	39.3	14.7	7.18	4.29	2.49	1.76	1.77
MAX	6.5	31	20	56	248	102	26	18	5.3	3.0	2.1	2.6
MIN	.64	1.6	1.6	3.0	5.2	15	11	5.3	2.9	2.1	1.6	1.5
AC-FT	125	303	284	519	1,700	2,410	877	442	255	153	108	106

CAL YR 1972 TOTAL 974.96 MEAN 2.66 MAX 31 MIN .15 AC-FT 1,930
WTR YR 1973 TOTAL 3,673.06 MEAN 10.1 MAX 248 MIN .64 AC-FT 7,290

PEAK DISCHARGE (BASE, 150 CFS).--Same as those listed on previous page.

11056500 LITTLE SAN GORGONIO CREEK NEAR BEAUMONT, CALIF.

LOCATION.--Lat 34°01'45", long 116°56'43", in NW¼SW¼NW¼ sec.1, T.2 S., R.1 W., San Bernardino County, on right bank at upstream side of bridge on Oak Glen Road, 3.0 miles upstream from Wallace Creek, and 7 miles north of Beaumont.

DRAINAGE AREA.--3.23 sq mi.

PERIOD OF RECORD.--October 1948 to current year.

GAGE.--Water-stage recorder and concrete control. Altitude of gage is 4,320 ft (from topographic map). Prior to July 30, 1970, at site 42 ft downstream on left bank at same datum.

AVERAGE DISCHARGE.--25 years, 0.47 cfs (341 acre-ft per year).

EXTREMES.--Current year: Maximum discharge, 53 cfs Feb. 11 (gage height, 3.54 ft); no flow Oct. 4-19, 22-25. Period of record: Maximum discharge, 11,000 cfs Feb. 25, 1969 (gage height, 8.50 ft, from floodmarks), from rating curve extended above 32 cfs on basis of slope-area measurements at gage heights 2.18, 3.45, and 8.50 ft; no flow for several months in most years.

REMARKS.--Records fair. No regulation above station. Several small diversions above station for irrigation. See schematic diagram of Santa Ana River basin.

DISCHARGE, IN CUBIC FEET PER SECOND, WATER YEAR OCTOBER 1972 TO SEPTEMBER 1973

DAY	OCT	NOV	DEC	JAN	FEB	MAR	APR	MAY	JUN	JUL	AUG	SEP
1	.02	.01	.07	.36	.13	.27	.53	.46	1.5	.20	.09	.03
2	.01	.01	.07	.36	.07	.27	.39	.46	1.7	.20	.07	.03
3	.01	.01	.07	.36	.07	.18	.32	.44	1.0	.07	.06	.03
4	0	.02	3.5	.36	.11	.32	.36	.47	.45	.11	.08	.03
5	0	.02	.36	.46	.07	.31	.33	1.5	.40	.15	.10	.04
6	0	.02	.28	.36	.46	5.9	.31	.75	.40	.20	.13	.04
7	0	.02	.33	.36	.11	3.0	.31	.38	.38	.20	.13	.03
8	0	.02	.27	.20	.15	1.8	.43	.35	.29	.27	.12	.04
9	0	.03	.24	.15	.11	1.4	.52	.29	.27	.20	.11	.03
10	0	.03	.20	.15	.20	.99	.36	.27	.27	.15	.10	.03
11	0	.36	.20	.15	11	6.1	.27	.25	.27	.13	.07	.03
12	0	.05	.25	.11	1.8	2.4	.27	.23	.27	.15	.07	.03
13	0	.03	.19	.07	1.1	1.8	.36	.23	.36	.07	.07	.03
14	0	.59	.17	.11	.56	1.5	.46	.23	.46	.11	.05	.03
15	0	.05	.15	.11	.52	1.5	.46	.23	.59	.07	.04	.04
16	0	1.1	.15	.59	.36	1.6	.46	.37	.59	.07	.03	.04
17	0	.27	.15	.20	.24	1.1	.59	.44	.36	.11	.03	.04
18	0	.11	.15	.90	.24	.87	.73	.35	.27	.10	.04	.04
19	0	.11	.15	1.1	.16	.74	.73	.37	.20	.09	.04	.04
20	.02	.09	.18	.20	.18	.90	.59	.37	.27	.11	.05	.04
21	.01	.11	.14	.15	.11	.59	.59	.22	.46	.11	.05	.04
22	0	.09	.15	.15	.11	.79	.36	.25	.27	.10	.05	.04
23	0	.07	.15	.11	.09	.78	.20	.35	.20	.08	.05	.06
24	0	.07	.15	.11	.07	.78	.27	.44	.20	.10	.04	.05
25	0	.07	.18	.11	.11	.67	.27	.68	.27	.09	.05	.07
26	.01	.07	.15	.13	.08	.59	.27	.81	.20	.09	.05	.06
27	.02	.07	.11	.11	.09	2.0	.36	.64	.15	.08	.04	.06
28	.01	.07	.11	.10	1.3	1.5	.27	.56	.36	.11	.03	.05
29	.01	.07	.15	.11	------	1.0	.27	.64	.27	.10	.03	.04
30	.01	.07	.15	.14	------	.74	.73	1.3	.27	.09	.03	.03
31	.01	------	.15	.15	------	.59	------	1.2	------	.09	.04	------
TOTAL	.14	3.71	8.72	8.03	19.60	42.98	12.37	15.53	12.95	3.80	1.94	1.19
MEAN	.005	.12	.28	.26	.70	1.39	.41	.50	.43	.12	.063	.040
MAX	.02	1.1	3.5	1.1	11	6.1	.73	1.5	1.7	.27	.13	.07
MIN	0	.01	.07	.07	.07	.18	.20	.22	.15	.07	.03	.03
AC-FT	.3	7.4	17	16	39	85	25	31	26	7.5	3.8	2.4

CAL YR 1972 TOTAL 42.45 MEAN .12 MAX 3.5 MIN 0 AC-FT 84
WTR YR 1973 TOTAL 130.96 MEAN .36 MAX 11 MIN 0 AC-FT 260

PEAK DISCHARGE (BASE, 10 CFS)

DATE	TIME	G.H.	DISCHARGE	DATE	TIME	G.H.	DISCHARGE
12-4	1530	3.43	26	3-6	1845	3.46	31
1-18	2200	3.37	11	3-11	1200	3.45	26
2-11	0645	3.54	53	5-30	0415	3.38	11
2-28	0215	3.39	16				

11057500 SAN TIMOTEO CREEK NEAR LOMA LINDA, CALIF.

LOCATION.--Lat 34°03'49", long 117°16'19", in San Bernardino Grant, San Bernardino County, on right bank 50 ft downstream from west bound lane of Interstate Highway 10, and 0.8 mile northwest of Loma Linda.

DRAINAGE AREA.--125 sq mi.

PERIOD OF RECORD.--October 1954 to September 1965, February 1968 to current year.

GAGE.--Water-stage recorder. Datum of gage is 1,015.89 ft above mean sea level. Prior to February 1968, at site 0.5 mile downstream at different datum.

AVERAGE DISCHARGE.--16 years (1954-65, 1968-73), 2.65 cfs (1,920 acre-ft per year).

EXTREMES.--Current year: Maximum discharge, 251 cfs Feb. 11 (gage height, 3.50 ft, from floodmark); no flow many days.

Period of record: Maximum discharge, 15,000 cfs Feb. 25, 1969 (gage height, 8.2 ft, from floodmark), from rating curve extended above 2,100 cfs on basis of slope-conveyance measurement of maximum flow; no flow for several days in some years.

REMARKS.--Records poor. No regulation above station. Natural flow affected by pumping and return flow from irrigated areas.

DISCHARGE, IN CUBIC FEET PER SECOND, WATER YEAR OCTOBER 1972 TO SEPTEMBER 1973

DAY	OCT	NOV	DEC	JAN	FEB	MAR	APR	MAY	JUN	JUL	AUG	SEP
1	.78	.42	.87	.78	1.5	.98	.33	.06	.58	.64	1.3	.80
2	.78	.55	.32	.78	1.3	1.3	.19	.04	.53	1.1	1.3	.49
3	.78	.42	0	.52	1.8	.86	.10	.86	.65	.96	1.3	.37
4	.78	.64	6.2	.52	4.2	1.7	0	1.1	.42	.81	1.1	2.0
5	.78	.78	.39	.42	2.0	.50	.92	.60	.53	.81	1.1	1.8
6	.42	.78	.52	.42	17	5.9	.70	.06	.53	.53	1.1	1.6
7	.52	.78	.52	.42	2.0	1.5	.07	.05	.53	.53	1.3	2.4
8	.19	.94	.72	.33	3.8	8.5	0	.33	.42	1.1	1.8	1.8
9	.42	.64	.30	2.5	2.6	1.2	0	.53	.42	1.1	1.3	1.3
10	.32	.64	.22	1.7	2.3	.42	0	.14	.42	.96	1.1	1.1
11	.65	8.5	.25	1.1	76	6.0	0	.04	.33	.96	.65	1.1
12	1.3	.52	.33	1.5	10	4.0	0	.14	.33	.81	.96	.96
13	1.5	.52	.15	1.1	7.0	3.4	0	.12	.65	.81	1.3	.42
14	1.3	8.1	.21	.94	4.7	1.1	0	.25	.53	1.1	1.8	.53
15	1.5	.30	.33	1.3	4.6	1.1	0	.33	.42	1.1	2.0	1.1
16	1.8	17	.42	8.9	2.0	.40	0	.25	.42	.96	1.8	3.4
17	1.5	1.8	.35	.64	2.6	1.7	0	.07	.42	.96	3.0	.96
18	1.3	1.3	.52	1.4	3.4	1.5	0	.25	.33	.65	1.1	.96
19	8.0	1.1	.42	3.1	2.6	1.5	0	.25	.33	.53	.46	.96
20	2.0	.78	.26	.19	1.8	8.5	0	.33	.33	.65	1.6	.53
21	1.8	.94	.14	.25	1.8	8.0	0	.53	.25	.65	1.8	.80
22	1.5	.78	.33	.02	.35	5.0	0	.53	.25	.53	1.3	.80
23	1.3	.92	.52	.27	0	2.0	0	.53	.19	.53	.65	1.3
24	1.0	1.1	.42	.09	.93	1.8	.27	.53	.19	.65	.53	1.6
25	.78	.78	.52	.69	.67	1.5	1.1	.53	.19	.81	.64	.33
26	.78	.78	.64	1.1	.38	1.5	.62	.64	.14	.81	0	0
27	.78	.64	.78	1.8	1.9	1.0	.26	.53	.14	.81	.49	.01
28	.64	.18	.52	1.8	14	.50	0	.53	.16	.96	1.3	.25
29	.64	.25	.78	1.8	------	.50	.14	.53	.33	.96	1.8	.38
30	.55	1.8	.78	4.2	------	.50	.04	.53	.53	.96	1.8	1.6
31	.55	------	.78	1.1	------	.33	------	.58	------	1.1	1.1	------
TOTAL	36.94	54.68	19.51	41.68	173.23	74.69	4.74	11.79	11.49	25.84	38.78	31.65
MEAN	1.19	1.82	.63	1.34	6.19	2.41	.16	.38	.38	.83	1.25	1.06
MAX	8.0	17	6.2	8.9	76	8.5	1.1	1.1	.65	1.1	3.0	3.4
MIN	.19	.18	0	.02	0	.33	0	.04	.14	.53	0	0
AC-FT	73	108	39	83	344	148	9.4	23	23	51	77	63

CAL YR 1972 TOTAL 318.38 MEAN .87 MAX 17 MIN 0 AC-FT 632
WTR YR 1973 TOTAL 525.02 MEAN 1.44 MAX 76 MIN 0 AC-FT 1,040

PEAK DISCHARGE (BASE, 150 CFS).--Feb. 11 (1000) 251 cfs (3.50 ft).

NOTE.--Stage-discharge relation indefinite above 3.5 cfs. No gage-height record May 18 to Aug. 6.

11058500 EAST TWIN CREEK NEAR ARROWHEAD SPRINGS, CALIF.

LOCATION.--Lat 34°10'45", long 117°15'53", in NW¼NE¼NE¼ sec.14, T.1N., R.4 W., San Bernardino County, on right bank 100 ft upstream from Del Rosa Water Co.'s diversion dam, 0.5 mile south of Arrowhead Springs, and 1.0 mile downstream from Strawberry Creek.

DRAINAGE AREA.--8.80 sq mi.

PERIOD OF RECORD.--December 1919 to current year. Prior to October 1952 published as Strawberry Creek near Arrowhead Springs.

GAGE.--Water-stage recorder. Broad-crested weir since September 1938. Altitude of gage is 1,590 ft (from topographic map).

AVERAGE DISCHARGE.--53 years (1920-73), 4.51 cfs (3,270 acre-ft per year).

EXTREMES.--Current year: Maximum discharge, 264 cfs Feb. 11 (gage height, 3.81 ft); minimum daily, 0.36 cfs July 28-30, Aug. 3, 4.
Period of record: Maximum discharge, 3,360 cfs Mar. 2, 1938, based on rainfall-runoff studies; practically no flow at times in 1929, 1931-35.

REMARKS.--Records fair. No regulation above station. One small diversion for domestic use above station. See schematic diagram of Santa Ana River basin.

DISCHARGE, IN CUBIC FEET PER SECOND, WATER YEAR OCTOBER 1972 TO SEPTEMBER 1973

DAY	OCT	NOV	DEC	JAN	FEB	MAR	APR	MAY	JUN	JUL	AUG	SEP
1	.48	.77	1.1	1.2	2.4	10	10	3.9	2.9	.90	.45	.63
2	.49	.83	1.0	1.2	2.4	6.8	9.1	3.7	2.9	.83	.45	.56
3	.50	.77	1.0	1.2	2.5	6.1	7.3	3.5	2.8	.77	.36	.56
4	.52	.71	7.0	.97	2.4	6.5	6.3	3.8	2.5	.77	.36	.57
5	.48	.77	2.7	.90	2.3	6.1	6.0	3.7	2.3	.71	.41	.58
6	.49	.71	1.8	.90	6.4	11	5.8	3.6	2.0	.77	.40	.58
7	.45	.71	4.6	.90	4.7	21	5.5	3.4	1.8	.77	.40	.60
8	.45	.83	3.8	.90	3.4	19	5.1	3.1	1.8	.77	.41	.60
9	.50	.77	3.1	1.0	3.1	17	4.7	2.9	1.8	.71	.38	.55
10	.55	2.3	2.5	1.1	3.5	14	4.3	2.8	1.8	.65	.39	.60
11	.50	4.2	2.1	.90	163	40	4.1	2.9	1.9	.60	.40	.60
12	.50	3.1	1.9	.83	99	39	3.9	3.0	1.8	.71	.43	.60
13	.50	2.2	1.7	.83	83	28	3.7	2.9	1.8	.71	.45	.60
14	.45	4.2	1.6	.77	34	23	3.6	2.9	2.3	.77	.43	.60
15	.45	3.1	1.5	.83	22	17	4.0	2.8	2.0	.65	.42	.60
16	.45	20	1.5	1.8	13	14	4.4	2.6	1.9	.71	.42	.60
17	.50	5.2	1.5	6.2	9.6	12	4.4	2.6	2.0	.60	.43	.60
18	.55	3.8	1.5	7.4	8.8	10	4.2	2.8	1.8	.55	.43	.60
19	1.7	3.1	1.4	11	7.4	10	4.2	2.8	1.5	.55	.42	.60
20	1.2	2.6	1.4	5.2	6.4	19	3.9	2.8	1.3	.60	.43	.60
21	.90	2.3	1.4	3.6	6.2	18	3.7	2.5	1.2	.60	.44	.60
22	.60	2.0	1.4	3.1	5.4	21	3.5	2.5	1.1	.60	.46	.65
23	.55	1.8	1.4	2.9	5.7	16	3.3	2.5	1.2	.60	.47	.65
24	.50	1.7	1.4	2.8	5.7	14	3.2	2.5	1.1	.50	.48	.71
25	.45	1.5	1.3	2.8	5.5	13	3.0	2.9	1.1	.41	.50	.71
26	.50	1.4	1.3	3.0	5.4	12	3.1	3.0	.97	.41	.54	.71
27	.65	1.3	1.3	2.6	5.4	12	3.5	2.4	1.0	.41	.51	.71
28	.55	1.2	1.3	2.5	23	15	3.5	2.2	1.1	.36	.50	.71
29	.55	1.2	1.3	2.5	------	12	3.7	2.2	1.0	.36	.53	.77
30	.71	1.1	1.3	2.6	------	12	4.2	2.2	1.0	.36	.53	.83
31	.83	------	1.3	2.5	------	11	------	2.6	------	.41	.58	------
TOTAL	18.50	76.17	59.4	76.93	541.6	485.5	139.2	90.0	51.67	19.12	13.81	18.88
MEAN	.60	2.54	1.92	2.48	19.3	15.7	4.64	2.90	1.72	.62	.45	.63
MAX	1.7	20	7.0	11	163	40	10	3.9	2.9	.90	.58	.83
MIN	.45	.71	1.0	.77	2.3	6.1	3.0	2.2	.97	.36	.36	.55
AC-FT	37	151	118	153	1,070	963	276	179	102	38	27	37

CAL YR 1972 TOTAL 465.87 MEAN 1.27 MAX 20 MIN .44 AC-FT 924
WTR YR 1973 TOTAL 1,590.78 MEAN 4.36 MAX 163 MIN .36 AC-FT 3,160

PEAK DISCHARGE (BASE, 100 CFS).--Feb. 11 (0815) 264 cfs (3.81 ft).

11058600 WATERMAN CANYON CREEK NEAR ARROWHEAD SPRINGS, CALIF.

LOCATION.--Lat 34°11'36", long 117°16'25", in NE¼NW¼NW¼ sec.11, T.1 N., R.4 W., San Bernardino County, on left bank 0.8 mile northwest of Arrowhead Springs, and 1.3 miles north of San Bernardino National Forest boundary.

DRAINAGE AREA.--4.65 sq mi.

PERIOD OF RECORD.--November 1911 to October 1914 (published as "near San Bernardino"), December 1919 to current year.

GAGE.--Water-stage recorder. Broad-crested weir since September 1938. Datum of gage is 2,045.46 ft above mean sea level. Prior to December 1919, nonrecording gage at site 300 ft downstream at different datum.

AVERAGE DISCHARGE.--55 years (1912-14, 1920-73), 2.59 cfs (1,880 acre-ft per year).

EXTREMES.--Current year: Maximum discharge, 276 cfs Feb. 11 (gage height, 3.72 ft); minimum daily, 0.09 cfs Oct. 6.
1920 to current year: Maximum discharge, 2,350 cfs Mar. 2, 1938, based on rainfall-runoff studies; no flow at times in most years.

REMARKS.--Records good. No regulation above station. One small diversion for domestic use above station. See schematic diagram of Santa Ana River basin.

DISCHARGE, IN CUBIC FEET PER SECOND, WATER YEAR OCTOBER 1972 TO SEPTEMBER 1973

DAY	OCT	NOV	DEC	JAN	FEB	MAR	APR	MAY	JUN	JUL	AUG	SEP
1	.23	.40	1.8	1.0	1.9	5.9	7.4	3.3	1.4	1.1	.62	.45
2	.24	.35	1.7	1.0	1.7	4.8	7.2	3.0	1.4	.92	.56	.45
3	.24	.35	1.7	1.0	2.1	4.5	6.9	2.8	1.3	.92	.50	.45
4	.20	.30	11	1.1	1.9	4.8	6.9	2.7	1.3	.92	.50	.50
5	.16	.25	4.4	.98	1.7	4.2	6.7	4.0	1.3	.92	.56	.56
6	.09	.30	1.4	.98	6.9	8.1	6.7	3.2	1.3	.98	.56	.45
7	.12	.25	5.3	.92	3.1	7.4	6.5	3.0	1.3	1.0	.50	.40
8	.16	.25	3.0	.92	2.5	8.9	6.3	2.8	1.3	.98	.45	.45
9	.25	.25	1.9	1.3	2.1	7.7	5.9	2.7	1.2	.92	.45	.45
10	.30	.25	1.6	.98	5.5	7.2	5.7	2.6	1.3	.92	.45	.50
11	.25	2.0	1.5	.98	32	12	5.7	2.5	1.3	.80	.40	.50
12	.25	1.2	1.4	.92	21	8.6	5.3	2.4	1.3	.92	.35	.50
13	.20	1.2	1.4	.98	13	7.7	5.3	2.3	1.5	.92	.35	.50
14	.16	2.4	1.4	.92	8.9	7.4	5.3	2.2	1.9	.92	.35	.50
15	.16	1.5	1.3	.92	7.7	6.9	5.1	2.1	1.5	.98	.40	.50
16	.16	25	1.2	6.5	6.9	6.7	4.8	2.0	1.5	.92	.40	.50
17	.16	20	1.2	4.3	6.5	6.5	4.8	2.0	1.5	.92	.35	.45
18	.25	11	1.2	8.1	6.1	6.3	4.6	1.9	1.5	.80	.35	.45
19	5.5	7.2	1.2	9.5	5.7	6.3	4.5	1.9	1.4	.80	.35	.45
20	2.4	5.3	1.2	4.5	5.7	8.9	4.3	1.8	1.3	.86	.35	.50
21	2.0	4.2	1.2	3.9	5.9	8.1	4.2	1.8	1.3	.86	.35	.45
22	1.6	3.4	1.1	3.4	5.5	8.1	4.0	1.7	1.3	.86	.30	.56
23	1.5	2.8	1.1	3.0	5.1	7.9	3.9	1.7	1.4	.74	.35	.62
24	1.2	2.5	1.1	2.5	4.8	7.9	3.7	1.6	1.4	.62	.35	.62
25	1.1	2.4	1.0	3.1	4.6	7.7	3.6	1.6	1.4	.56	.40	.50
26	.90	2.2	.98	2.7	4.6	7.4	3.3	1.6	1.4	.56	.45	.35
27	.80	2.0	.98	2.3	4.6	7.4	3.3	1.5	1.2	.56	.45	.35
28	.70	2.0	1.1	2.1	9.8	7.7	3.3	1.5	1.1	.56	.45	.35
29	.60	1.9	.98	2.0	------	7.4	3.4	1.5	1.1	.62	.40	.35
30	.50	1.8	.98	2.2	------	7.4	4.0	1.4	1.2	.62	.35	.35
31	.45	------	.98	2.1	------	7.4	------	1.4	------	.68	.40	------
TOTAL	22.83	104.95	58.30	77.10	187.8	225.2	152.6	68.5	40.6	25.66	13.05	14.01
MEAN	.74	3.50	1.88	2.49	6.71	7.26	5.09	2.21	1.35	.83	.42	.47
MAX	5.5	25	11	9.5	32	12	7.4	4.0	1.9	1.1	.62	.62
MIN	.09	.25	.98	.92	1.7	4.2	3.3	1.4	1.1	.56	.30	.35
AC-FT	45	208	116	153	373	447	303	136	81	51	26	28

CAL YR 1972 TOTAL 361.18 MEAN .99 MAX 25 MIN .01 AC-FT 716
WTR YR 1973 TOTAL 990.60 MEAN 2.71 MAX 32 MIN .09 AC-FT 1,960

PEAK DISCHARGE (BASE, 35 CFS)

DATE	TIME	G.H.	DISCHARGE	DATE	TIME	G.H.	DISCHARGE
10-19	0130	2.88	58	2-11	0700	3.72	276
11-16	1645	3.23	130	3-6	2315	2.67	36
12-4	1245	3.12	120	3-11	1045	2.75	45

11058500 EAST TWIN CREEK NEAR ARROWHEAD SPRINGS, CALIF.

LOCATION.--Lat 34°10'45", long 117°15'53", in NW¼NE¼NE¼ sec.14, T.1N., R.4 W., San Bernardino County, on right bank 100 ft upstream from Del Rosa Water Co.'s diversion dam, 0.5 mile south of Arrowhead Springs, and 1.0 mile downstream from Strawberry Creek.

DRAINAGE AREA.--8.80 sq mi.

PERIOD OF RECORD.--December 1919 to current year. Prior to October 1952 published as Strawberry Creek near Arrowhead Springs.

GAGE.--Water-stage recorder. Broad-crested weir since September 1938. Altitude of gage is 1,590 ft (from topographic map).

AVERAGE DISCHARGE.--53 years (1920-73), 4.51 cfs (3,270 acre-ft per year).

EXTREMES.--Current year: Maximum discharge, 264 cfs Feb. 11 (gage height, 3.81 ft); minimum daily, 0.36 cfs July 28-30, Aug. 3, 4.
Period of record: Maximum discharge, 3,360 cfs Mar. 2, 1938, based on rainfall-runoff studies; practically no flow at times in 1929, 1931-35.

REMARKS.--Records fair. No regulation above station. One small diversion for domestic use above station. See schematic diagram of Santa Ana River basin.

DISCHARGE, IN CUBIC FEET PER SECOND, WATER YEAR OCTOBER 1972 TO SEPTEMBER 1973

DAY	OCT	NOV	DEC	JAN	FEB	MAR	APR	MAY	JUN	JUL	AUG	SEP
1	.48	.77	1.1	1.2	2.4	10	10	3.9	2.9	.90	.45	.63
2	.49	.83	1.0	1.2	2.4	6.8	9.1	3.7	2.9	.83	.45	.56
3	.50	.77	1.0	1.2	2.5	6.1	7.3	3.5	2.8	.77	.36	.56
4	.52	.71	7.0	.97	2.4	6.5	6.3	3.8	2.5	.77	.36	.57
5	.48	.77	2.7	.90	2.3	6.1	6.0	3.7	2.3	.71	.41	.58
6	.49	.71	1.8	.90	6.4	11	5.8	3.6	2.0	.77	.40	.58
7	.45	.71	4.6	.90	4.7	21	5.5	3.4	1.8	.77	.40	.60
8	.45	.83	3.8	.90	3.4	19	5.1	3.1	1.8	.77	.41	.60
9	.50	.77	3.1	1.0	3.1	17	4.7	2.9	1.8	.71	.38	.55
10	.55	2.3	2.5	1.1	3.5	14	4.3	2.8	1.8	.65	.39	.60
11	.50	4.2	2.1	.90	163	40	4.1	2.9	1.9	.60	.40	.60
12	.50	3.1	1.9	.83	99	39	3.9	3.0	1.8	.71	.43	.60
13	.50	2.2	1.7	.83	83	28	3.7	2.9	1.8	.71	.45	.60
14	.45	4.2	1.6	.77	34	23	3.6	2.9	2.3	.77	.43	.60
15	.45	3.1	1.5	.83	22	17	4.0	2.8	2.0	.65	.42	.60
16	.45	20	1.5	1.8	13	14	4.4	2.6	1.9	.71	.42	.60
17	.50	5.2	1.5	6.2	9.6	12	4.4	2.6	2.0	.60	.43	.60
18	.55	3.8	1.5	7.4	8.8	10	4.2	2.8	1.8	.55	.43	.60
19	1.7	3.1	1.4	11	7.4	10	4.2	2.8	1.5	.55	.42	.60
20	1.2	2.6	1.4	5.2	6.4	19	3.9	2.8	1.3	.60	.43	.60
21	.90	2.3	1.4	3.6	6.2	18	3.7	2.5	1.2	.60	.44	.60
22	.60	2.0	1.4	3.1	5.4	21	3.5	2.5	1.1	.60	.46	.65
23	.55	1.8	1.4	2.9	5.7	16	3.3	2.5	1.2	.60	.47	.65
24	.50	1.7	1.4	2.8	5.7	14	3.2	2.5	1.1	.50	.48	.71
25	.45	1.5	1.3	2.8	5.5	13	3.0	2.9	1.1	.41	.50	.71
26	.50	1.4	1.3	3.0	5.4	12	3.1	3.0	.97	.41	.54	.71
27	.65	1.3	1.3	2.6	5.4	12	3.5	2.4	1.0	.41	.51	.71
28	.55	1.2	1.3	2.5	23	15	3.5	2.2	1.1	.36	.50	.71
29	.55	1.2	1.3	2.5	------	12	3.7	2.2	1.0	.36	.53	.77
30	.71	1.1	1.3	2.6	------	12	4.2	2.2	1.0	.36	.53	.83
31	.83	------	1.3	2.5	------	11	------	2.6	------	.41	.58	------
TOTAL	18.50	76.17	59.4	76.93	541.6	485.5	139.2	90.0	51.67	19.12	13.81	18.88
MEAN	.60	2.54	1.92	2.48	19.3	15.7	4.64	2.90	1.72	.62	.45	.63
MAX	1.7	20	7.0	11	163	40	10	3.9	2.9	.90	.58	.83
MIN	.45	.71	1.0	.77	2.3	6.1	3.0	2.2	.97	.36	.36	.55
AC-FT	37	151	118	153	1,070	963	276	179	102	38	27	37

CAL YR 1972 TOTAL 465.87 MEAN 1.27 MAX 20 MIN .44 AC-FT 924
WTR YR 1973 TOTAL 1,590.78 MEAN 4.36 MAX 163 MIN .36 AC-FT 3,160

PEAK DISCHARGE (BASE, 100 CFS).--Feb. 11 (0815) 264 cfs (3.81 ft).

11058600 WATERMAN CANYON CREEK NEAR ARROWHEAD SPRINGS, CALIF.

LOCATION.--Lat 34°11'36", long 117°16'25", in NE¼NW¼NW¼ sec.11, T.1 N., R.4 W., San Bernardino County, on left bank 0.8 mile northwest of Arrowhead Springs, and 1.3 miles north of San Bernardino National Forest boundary.

DRAINAGE AREA.--4.65 sq mi.

PERIOD OF RECORD.--November 1911 to October 1914 (published as "near San Bernardino"), December 1919 to current year.

GAGE.--Water-stage recorder. Broad-crested weir since September 1938. Datum of gage is 2,045.46 ft above mean sea level. Prior to December 1919, nonrecording gage at site 300 ft downstream at different datum.

AVERAGE DISCHARGE.--55 years (1912-14, 1920-73), 2.59 cfs (1,880 acre-ft per year).

EXTREMES.--Current year: Maximum discharge, 276 cfs Feb. 11 (gage height, 3.72 ft); minimum daily, 0.09 cfs Oct. 6.
1920 to current year: Maximum discharge, 2,350 cfs Mar. 2, 1938, based on rainfall-runoff studies; no flow at times in most years.

REMARKS.--Records good. No regulation above station. One small diversion for domestic use above station. See schematic diagram of Santa Ana River basin.

DISCHARGE, IN CUBIC FEET PER SECOND, WATER YEAR OCTOBER 1972 TO SEPTEMBER 1973

DAY	OCT	NOV	DEC	JAN	FEB	MAR	APR	MAY	JUN	JUL	AUG	SEP
1	.23	.40	1.8	1.0	1.9	5.9	7.4	3.3	1.4	1.1	.62	.45
2	.24	.35	1.7	1.0	1.7	4.8	7.2	3.0	1.4	.92	.56	.45
3	.24	.35	1.7	1.0	2.1	4.5	6.9	2.8	1.3	.92	.50	.45
4	.20	.30	11	1.1	1.9	4.8	6.9	2.7	1.3	.92	.50	.50
5	.16	.25	4.4	.98	1.7	4.2	6.7	4.0	1.3	.92	.56	.56
6	.09	.30	1.4	.98	6.9	8.1	6.7	3.2	1.3	.98	.56	.45
7	.12	.25	5.3	.92	3.1	7.4	6.5	3.0	1.3	1.0	.50	.40
8	.16	.25	3.0	.92	2.5	8.9	6.3	2.8	1.3	.98	.45	.45
9	.25	.25	1.9	1.3	2.1	7.7	5.9	2.7	1.2	.92	.45	.45
10	.30	.25	1.6	.98	5.5	7.2	5.7	2.6	1.3	.92	.45	.50
11	.25	2.0	1.5	.98	32	12	5.7	2.5	1.3	.80	.40	.50
12	.25	1.2	1.4	.92	21	8.6	5.3	2.4	1.3	.92	.35	.50
13	.20	1.2	1.4	.98	13	7.7	5.3	2.3	1.5	.92	.35	.50
14	.16	2.4	1.4	.92	8.9	7.4	5.3	2.2	1.9	.92	.35	.50
15	.16	1.5	1.3	.92	7.7	6.9	5.1	2.1	1.5	.98	.40	.50
16	.16	25	1.2	6.5	6.9	6.7	4.8	2.0	1.5	.92	.40	.50
17	.16	20	1.2	4.3	6.5	6.5	4.8	2.0	1.5	.92	.35	.45
18	.25	11	1.2	8.1	6.1	6.3	4.6	1.9	1.5	.80	.35	.45
19	5.5	7.2	1.2	9.5	5.7	6.3	4.5	1.9	1.4	.80	.35	.45
20	2.4	5.3	1.2	4.5	5.7	8.9	4.3	1.8	1.3	.86	.35	.50
21	2.0	4.2	1.2	3.9	5.9	8.1	4.2	1.8	1.3	.86	.35	.45
22	1.6	3.4	1.1	3.4	5.5	8.1	4.0	1.7	1.3	.86	.30	.56
23	1.5	2.8	1.1	3.0	5.1	7.9	3.9	1.7	1.4	.74	.35	.62
24	1.2	2.5	1.1	2.5	4.8	7.9	3.7	1.6	1.4	.62	.35	.62
25	1.1	2.4	1.0	3.1	4.6	7.7	3.6	1.6	1.4	.56	.40	.50
26	.90	2.2	.98	2.7	4.6	7.4	3.3	1.6	1.4	.56	.45	.35
27	.80	2.0	.98	2.3	4.6	7.4	3.3	1.5	1.2	.56	.45	.35
28	.70	2.0	1.1	2.1	9.8	7.7	3.3	1.5	1.1	.56	.45	.35
29	.60	1.9	.98	2.0	------	7.4	3.4	1.5	1.1	.62	.40	.35
30	.50	1.8	.98	2.2	------	7.4	4.0	1.4	1.2	.62	.35	.35
31	.45	------	.98	2.1	------	7.4	------	1.4	------	.68	.40	------
TOTAL	22.83	104.95	58.30	77.10	187.8	225.2	152.6	68.5	40.6	25.66	13.05	14.01
MEAN	.74	3.50	1.88	2.49	6.71	7.26	5.09	2.21	1.35	.83	.42	.47
MAX	5.5	25	11	9.5	32	12	7.4	4.0	1.9	1.1	.62	.62
MIN	.09	.25	.98	.92	1.7	4.2	3.3	1.4	1.1	.56	.30	.35
AC-FT	45	208	116	153	373	447	303	136	81	51	26	28

CAL YR 1972 TOTAL 361.18 MEAN .99 MAX 25 MIN .01 AC-FT 716
WTR YR 1973 TOTAL 990.60 MEAN 2.71 MAX 32 MIN .09 AC-FT 1,960

PEAK DISCHARGE (BASE, 35 CFS)

DATE	TIME	G.H.	DISCHARGE	DATE	TIME	G.H.	DISCHARGE
10-19	0130	2.88	58	2-11	0700	3.72	276
11-16	1645	3.23	130	3-6	2315	2.67	36
12-4	1245	3.12	120	3-11	1045	2.75	45

11059000 WARM CREEK FLOODWAY AT SAN BERNARDINO, CALIF.

LOCATION.--Lat 34°05'45", long 117°16'30", in San Bernardino Grant, San Bernardino County, on left bank 0.4 mile upstream from Mill Street, and 1.8 miles upstream from mouth.

DRAINAGE AREA.--47.8 sq mi.

PERIOD OF RECORD.--January 1961 to current year. Prior to October 1965, published as "near San Bernardino."

GAGE.--Water-stage recorder. Altitude of gage is 1,000 ft (from topographic map). Prior to Dec. 21, 1967, at site 0.4 mile downstream at different datum.

EXTREMES.--Current year: Maximum discharge, 1,560 cfs Feb. 11 (gage height, 4.45 ft); no flow part of year. Period of record: Maximum discharge, 9,600 cfs Feb. 25, 1969 (gage height, 6.75 ft), from rating curve extended above 3,000 cfs; no flow most of each year.

REMARKS.--Records fair except those less than 1 cfs, which are poor. Flow partly regulated by percolation basins above Marshall Boulevard. Del Rosa Water Co. diverts from East Twin Creek for domestic use and irrigation. See schematic diagram of Santa Ana River basin.

DISCHARGE, IN CUBIC FEET PER SECOND, WATER YEAR OCTOBER 1972 TO SEPTEMBER 1973

DAY	OCT	NOV	DEC	JAN	FEB	MAR	APR	MAY	JUN	JUL	AUG	SEP
1	0	0	0	.07	.51	2.0	3.3	.62	.10	0	0	5.1
2	0	0	0	0	0	1.4	2.5	.07	.20	0	0	1.3
3	0	0	0	0	1.4	1.4	2.0	0	.05	.08	0	0
4	0	0	93	.35	.68	4.1	.50	0	0	0	0	24
5	0	0	4.7	.06	7.7	1.2	.25	.49	.10	0	0	21
6	0	0	0	0	181	61	.25	.31	0	0	0	18
7	0	.06	51	0	3.5	78	.42	.11	0	0	0	18
8	0	.10	32	.15	.06	124	.25	.38	0	0	0	2.6
9	.13	0	1.5	2.2	1.1	25	.32	.20	0	0	0	2.0
10	.03	0	.32	.16	.40	10	.25	.34	0	0	0	2.0
11	0	101	.02	0	506	135	.81	.96	0	.22	0	.42
12	0	1.3	0	0	143	51	.53	1.0	0	0	0	0
13	0	0	0	0	128	23	.32	.62	.37	.22	0	0
14	0	75	4.1	0	12	36	.42	.25	.15	0	0	0
15	0	6.6	25	0	51	37	.32	2.8	0	0	.11	0
16	0	195	3.4	165	3.4	24	.32	.57	0	0	0	0
17	0	10	1.4	17	2.3	18	.32	1.0	0	0	0	0
18	0	0	0	132	1.7	13	.25	.36	0	0	0	0
19	120	0	2.3	126	.72	7.0	.25	.24	0	.10	0	0
20	9.7	0	0	14	0	109	.65	0	0	0	0	0
21	.44	0	.10	13	0	71	3.4	0	0	0	0	0
22	0	0	0	3.9	0	52	.55	.20	0	0	0	0
23	0	0	0	6.8	.23	34	.25	0	0	0	0	0
24	0	0	0	5.0	0	37	0	0	0	0	0	0
25	0	0	0	9.8	0	34	.34	0	.11	0	0	0
26	.11	0	0	19	0	21	.50	.03	0	0	0	0
27	.50	0	0	3.5	40	26	.69	0	0	0	0	0
28	0	0	4.2	0	102	13	1.0	0	0	0	0	0
29	0	0	0	0	------	9.0	.81	0	0	0	.91	0
30	0	0	0	16	------	6.0	1.0	0	0	0	1.1	0
31	.05	------	0	1.4	------	4.5	------	0	------	0	1.6	------
TOTAL	130.96	389.06	223.04	535.39	1,186.70	1,068.6	22.77	10.55	1.08	.62	3.72	94.42
MEAN	4.22	13.0	7.19	17.3	42.4	34.5	.76	.34	.036	.020	.12	3.15
MAX	120	195	93	165	506	135	3.4	2.8	.37	.22	1.6	24
MIN	0	0	0	0	0	1.2	0	0	0	0	0	0
AC-FT	260	772	442	1,060	2,350	2,120	45	21	2.1	1.2	7.4	187

CAL YR 1972 TOTAL 770.22 MEAN 2.10 MAX 195 MIN 0 AC-FT 1,530
WTR YR 1973 TOTAL 3,666.91 MEAN 10.0 MAX 506 MIN 0 AC-FT 7,270

11059100 SAN BERNARDINO WATER QUALITY CONTROL PLANT AT SAN BERNARDINO, CALIF.

LOCATION.--Lat 34°04'16", long 117°17'16", in San Bernardino Grant, San Bernardino County, at effluent end of chlorine contact chamber, 0.5 mile upstream from Santa Ana River at E Street bridge.

PERIOD OF RECORD.--October 1972 to September 1973.

GAGE.--Water-stage recorder and concrete control. Datum of gage is 979.50 ft above mean sea level (levels by city of San Bernardino).

EXTREMES.--Period of record: Maximum daily discharge, 28 cfs Sept. 10, 1973; minimum daily, 12 cfs Oct. 25, Nov. 4, 5, 7-9, 1972.

REMARKS.--Records poor Oct. 1 to July 23, good July 24 to Sept. 30. Records of chemical analyses for the current year are published in Part 2 of this report.

DISCHARGE, IN CUBIC FEET PER SECOND, WATER YEAR OCTOBER 1972 TO SEPTEMBER 1973

DAY	OCT	NOV	DEC	JAN	FEB	MAR	APR	MAY	JUN	JUL	AUG	SEP
1	14	13	16	25	20	25	25	25	25	25	25	23
2	15	14	15	25	20	25	25	25	25	24	24	22
3	15	14	14	25	20	25	25	25	25	24	24	23
4	15	12	25	24	20	25	21	25	25	22	23	25
5	14	12	25	20	25	25	21	25	25	22	22	25
6	17	13	25	20	25	25	22	25	25	21	24	25
7	15	12	25	19	25	25	25	25	25	22	25	26
8	15	12	25	20	25	25	25	25	25	20	24	23
9	15	12	25	20	20	25	24	25	25	23	25	16
10	16	13	25	22	20	25	25	22	25	23	25	28
11	16	17	24	20	25	25	25	20	25	22	23	25
12	16	17	23	21	25	25	25	22	25	23	23	25
13	16	17	24	24	25	25	25	20	25	22	25	25
14	16	17	25	23	25	25	25	22	25	20	25	25
15	16	17	25	22	25	25	25	25	25	20	24	24
16	16	17	25	25	25	25	25	25	25	20	24	24
17	16	17	24	25	25	25	25	25	25	21	25	25
18	16	17	25	25	25	25	25	25	25	22	23	25
19	16	17	24	25	25	25	25	25	25	20	22	25
20	16	17	25	25	25	25	25	25	25	22	25	19
21	16	17	24	25	25	25	25	25	25	21	25	25
22	16	17	24	25	25	25	25	25	25	21	24	25
23	16	17	25	22	25	25	25	25	25	24	25	24
24	15	17	24	20	25	25	25	25	25	25	25	25
25	12	17	25	20	25	25	25	25	25	25	24	24
26	14	17	25	25	25	25	25	25	25	25	22	25
27	15	17	25	22	25	25	25	25	25	25	25	25
28	14	16	25	22	25	25	25	25	25	23	24	25
29	13	15	24	22	------	25	25	25	25	22	25	24
30	15	15	25	25	------	25	25	25	25	25	26	24
31	15	------	24	20	------	25	------	25	------	25	25	------
TOTAL	472	462	734	703	670	775	738	756	750	699	750	724
MEAN	15.2	15.4	23.7	22.7	23.9	25.0	24.6	24.4	25.0	22.5	24.2	24.1
MAX	17	17	25	25	25	25	25	25	25	25	26	28
MIN	12	12	14	19	20	25	21	20	25	20	22	16
AC-FT	936	916	1,460	1,390	1,330	1,540	1,460	1,500	1,490	1,390	1,490	1,440

WTR YR 1973 TOTAL 8,233 MEAN 22.6 MAX 28 MIN 12 AC-FT 16,330

NOTE.--No gage-height record Oct. 1 to July 23.

11059300 SANTA ANA RIVER AT E STREET, NEAR SAN BERNARDINO, CALIF.

LOCATION.--Lat 34°04'05", long 117°17'36", in San Bernardino Grant, San Bernardino County, on downstream side of E Street bridge, 0.8 mile downstream from San Timoteo Creek, 1 mile upstream from Warm Creek, and 3 miles south of San Bernardino.

DRAINAGE AREA.--532 sq mi.

PERIOD OF RECORD.--March 1939 to September 1954, October 1966 to current year.

GAGE.--Water-stage recorder. Altitude of gage is 970 ft (from topographic map). Prior to Nov. 10, 1950, water-stage recorder on right bank at datum 10.00 ft higher. Nov. 11, 1950, to Sept. 30, 1954, water-stage recorders on both banks at datum 10.00 ft higher.

AVERAGE DISCHARGE.--15 years (1939-54), 12.5 cfs (9,050 acre-ft per year); 7 years (1966-73), 73.6 cfs (53,320 acre-ft per year).

EXTREMES.--Current year: Maximum discharge, about 7,100 cfs Feb. 11 (gage height, 4.92 ft); maximum gage height, 5.00 ft Oct. 19; minimum daily, 12 cfs Oct. 25, Nov. 4, 5, 7-9.
Period of record: Maximum discharge, 28,000 cfs Feb. 25, 1969; maximum gage height, 16.50 ft (present datum) Jan. 23, 1943, discharge uncertain but was probably less than 8,000 cfs; no flow many days prior to 1967.

REMARKS.--Records poor. Flow partly regulated by Big Bear Lake (see sta 11049000). Natural flow of stream affected by ground-water withdrawals and diversions for domestic use and irrigation above station. Effluent from sewage reclamation plant causes sustained flow since station was last operated. Records of chemical analyses for the current year are published in Part 2 of this report. See schematic diagram of Santa Ana River basin.

DISCHARGE, IN CUBIC FEET PER SECOND, WATER YEAR OCTOBER 1972 TO SEPTEMBER 1973

DAY	OCT	NOV	DEC	JAN	FEB	MAR	APR	MAY	JUN	JUL	AUG	SEP
1	14	13	16	26	20	120	34	28	28	25	25	29
2	15	14	15	25	20	79	28	25	33	24	24	22
3	15	14	14	28	20	26	25	27	28	24	24	23
4	15	12	100	24	20	40	21	27	28	22	23	51
5	14	12	27	20	30	28	21	26	30	22	22	48
6	17	13	28	20	220	375	22	26	33	21	24	39
7	15	12	80	19	30	435	28	26	30	22	25	46
8	15	12	43	20	25	393	24	25	33	20	24	23
9	15	12	25	20	20	158	26	26	28	23	25	16
10	16	13	25	22	20	58	26	22	28	23	25	28
11	18	115	24	20	1,070	491	28	20	32	22	23	25
12	20	22	23	21	578	140	28	22	32	23	23	25
13	22	24	24	24	300	103	28	20	28	22	25	25
14	19	137	25	23	75	78	30	22	26	20	25	25
15	18	20	25	22	100	60	28	31	26	20	24	24
16	22	200	25	200	50	51	30	31	26	20	24	24
17	19	45	24	40	40	42	30	28	28	21	25	25
18	18	28	26	150	30	36	28	31	30	22	23	25
19	182	27	24	50	25	27	26	31	30	20	22	25
20	30	28	25	40	25	246	28	28	28	22	25	19
21	24	27	24	30	25	125	27	35	32	21	25	25
22	17	25	24	25	25	83	26	35	33	21	24	25
23	16	21	25	22	25	54	32	28	28	24	25	24
24	15	22	24	20	25	51	27	26	27	25	25	25
25	12	20	25	20	120	43	28	22	30	25	24	24
26	14	20	28	50	85	34	27	27	30	25	22	25
27	15	18	25	22	150	33	28	28	25	25	25	25
28	14	16	25	22	235	52	27	27	27	23	24	25
29	13	15	24	22	------	47	26	25	27	22	25	24
30	15	15	25	40	------	40	28	26	25	25	26	24
31	15	------	24	20	------	36	------	30	------	25	25	------
TOTAL	689	972	891	1,107	3,408	3,584	815	831	869	699	750	813
MEAN	22.2	32.4	28.7	35.7	122	116	27.2	26.8	29.0	22.5	24.2	27.1
MAX	182	200	100	200	1,070	491	34	35	33	25	26	51
MIN	12	12	14	19	20	26	21	20	25	20	22	16
AC-FT	1,370	1,930	1,770	2,200	6,760	7,110	1,620	1,650	1,720	1,390	1,490	1,610

CAL YR 1972 TOTAL 6,058 MEAN 16.6 MAX 200 MIN 10 AC-FT 12,020
WTR YR 1973 TOTAL 15,428 MEAN 42.3 MAX 1,070 MIN 12 AC-FT 30,600

PEAK DISCHARGE (BASE, 400 CFS)

DATE	TIME	G.H.	DISCHARGE	DATE	TIME	G.H.	DISCHARGE
10-19	1900	5.00	about 1,100	2-28	0245	3.52	about 1,300
11-11	0830	4.20	about 640	3-6	2400	4.18	about 3,400
11-14	1345	4.98	about 1,100	3-8	1445	3.60	about 1,500
12-4	1500	3.90	about 730	3-11	1700	3.95	about 2,500
1-16	2100	4.23	about 880	3-20	1100	3.36	1,030
2-11	1400	4.92	about 7,100	3-21	2230	3.35	1,010

NOTE.--No gage-height record or stage-discharge relation indefinite Oct. 1 to Mar. 11 and Aug. 3 to Sept. 30.

11060500 MEEKS AND DALEY CANAL NEAR COLTON, CALIF.

LOCATION.--Lat 34°04'47", long 117°18'00", in San Bernardino Grant, San Bernardino County, at point of diversion from Warm Creek, and 1.5 miles northeast of Colton.

PERIOD OF RECORD.--September 1920 to current year. Published with station Warm Creek near Colton, October 1950 to September 1961.

GAGE.--Water-stage recorder. Altitude of gage is 965 ft (from topographic map).

EXTREMES.--Period of record: Maximum daily discharge, 25 cfs Mar. 2, 1938; no flow at times in most years.

REMARKS.--Records good. Canal diverts water from right bank of Warm Creek 1.6 miles northeast of Colton for irrigation in vicinity of Colton, Riverside, and Corona. All flow passing station this year was pumped from ground-water basin. Pumping began in 1931. See schematic diagram of Santa Ana River basin.

DISCHARGE, IN CUBIC FEET PER SECOND, WATER YEAR OCTOBER 1972 TO SEPTEMBER 1973

DAY	OCT	NOV	DEC	JAN	FEB	MAR	APR	MAY	JUN	JUL	AUG	SEP
1	12	5.2	0	.96			0	1.9	1.9	11	9.1	10
2	12	7.9	0	.96			0	2.1	1.9	9.8	9.2	10
3	12	7.9	0	.96			0	2.1	1.9	9.7	9.5	10
4	12	7.9	0	.32			0	2.0	1.9	10	9.5	10
5	12	7.9	0	0			0	1.9	1.7	10	9.5	10
6	12	7.9	0	0			0	1.9	1.7	10	9.3	10
7	12	7.9	0	0			0	1.8	1.6	10	9.1	10
8	13	7.9	0	.20			0	1.9	1.6	10	9.1	10
9	13	7.9	0	0			0	1.9	1.6	10	9.1	10
10	13	7.9	0	0			0	1.9	1.6	9.4	9.1	10
11	13	8.3	0	0			0	1.9	1.7	9.1	9.9	9.9
12	12	7.9	0	0			0	1.9	1.7	9.1	10	10
13	12	7.9	0	0			0	1.9	1.7	8.8	10	10
14	12	3.8	0	0			0	1.9	1.5	8.7	13	10
15	12	0	0	0			0	1.8	1.0	8.7	13	10
16	12	.57	0	0			0	1.7	.93	8.7	13	10
17	9.5	0	0	0			0	1.7	.83	8.7	13	10
18	7.9	0	0	0			0	1.7	.74	8.7	13	9.9
19	7.9	0	0	0			0	1.7	.52	8.7	13	10
20	7.9	0	0	0			0	1.7	.49	8.7	13	3.1
21	7.9	0	0	0			0	1.7	1.1	8.9	13	1.0
22	7.9	0	0	0			0	1.7	1.3	8.8	13	1.0
23	7.9	0	0	0			1.5	1.7	1.3	9.1	13	1.0
24	7.9	0	0	0			2.0	1.8	1.3	9.5	13	1.0
25	4.7	0	0	0			1.9	1.9	1.4	9.5	13	1.0
26	1.1	0	0	0			1.9	1.9	3.8	9.5	13	1.0
27	1.1	0	0	0			1.9	1.9	5.6	8.5	13	1.0
28	1.1	0	.57	0			1.9	1.7	7.7	7.6	12	1.0
29	1.1	0	.96	0	------		1.9	1.7	11	8.8	13	1.0
30	1.1	0	.96	0	------		2.0	1.7	11	9.9	13	1.0
31	1.1	------	.96	0	------		------	1.9	------	9.9	10	------
TOTAL	272.1	104.77	3.45	3.40	0	0	15.0	56.9	74.01	287.8	352.4	202.9
MEAN	8.78	3.49	.11	.11	0	0	.50	1.84	2.47	9.28	11.4	6.76
MAX	13	8.3	.96	.96	0	0	2.0	2.1	11	11	13	10
MIN	1.1	0	0	0	0	0	0	1.7	.49	7.6	9.1	1.0
AC-FT	540	208	6.8	6.7	0	0	30	113	147	571	699	402

CAL YR 1972 TOTAL 1,805.57 MEAN 4.93 MAX 13 MIN 0 AC-FT 3,580
WTR YR 1973 TOTAL 1,372.73 MEAN 3.76 MAX 13 MIN 0 AC-FT 2,720

11062000 LYTLE CREEK NEAR FONTANA, CALIF.

LOCATION.--Lat 34°12'44", long 117°27'26", in SE¼NW¼SE¼ sec.36, T.2 N., R.6 W., San Bernardino County, on right bank 75 ft upstream from highway bridge, 0.7 mile upstream from right tributary, and 8 miles north of Fontana.
DRAINAGE AREA.--46.3 sq mi.
PERIOD OF RECORD.--October 1918 to current year. Combined records of Lytle Creek and diversions, October 1898 to December 1899, October 1904 to current year (published as "at mouth of canyon near Rialto" 1898-99, as "near San Bernardino" 1904-18, and as Lytle Creek and Fontana pipe line near Fontana 1919-31). Monthly discharge only for some periods published in WSP 1315-B.
GAGE.--Water-stage recorder on creek. Dual arch-culvert control since 1964; water-stage recorders and sharp-crested weirs on conduit and infiltration line. Altitude of gage is 2,380 ft (from topographic map). October 1918 to Mar. 21, 1938, at site 1 mile downstream at different datum. Mar. 22, 1938, to Nov. 20, 1963, at site 75 ft downstream at datum 4.58 ft.
AVERAGE DISCHARGE (Creek only).--55 years, 14.1 cfs (10,220 acre-ft per year).
(Combined creek and diversions).--70 years, 42.6 cfs (30,860 acre-ft per year).
EXTREMES (Creek only).--Current year: Maximum discharge, 1,580 cfs Feb. 11 (gage height, 6.78 ft); no flow part of year.
Period of record: Maximum discharge, 35,900 cfs Jan. 25, 1969 (gage height, 15.0 ft, from floodmark), from rating curve extended above 570 cfs on basis of slope-area measurements at gage heights 10.78 and 15.0 ft; no flow at times in each year.
(Combined flow).--Current year: Maximum discharge, 1,590 cfs Feb. 11; minimum daily, 12 cfs Oct. 23.
Period of record: Maximum discharge, 35,900 cfs Jan. 25, 1969; minimum daily, 4.4 cfs Oct. 4-11, 1970 (affected by change in diversions due to fire of September 1970).
REMARKS.--Records (creek only), fair; (combined creek and diversions), good. No regulation above station. Southern California Edison Co.'s Lytle Creek conduit diverts 2.3 miles upstream for power development, and Fontana Union Water Co. collects water from an infiltration line upstream for irrigation. See schematic diagram of Santa Ana River basin. For records of combined discharge of Lytle Creek and diversions, see following page.

DISCHARGE, IN CUBIC FEET PER SECOND, WATER YEAR OCTOBER 1972 TO SEPTEMBER 1973

DAY	OCT	NOV	DEC	JAN	FEB	MAR	APR	MAY	JUN	JUL	AUG	SEP
1		0	0	0	0	22	42	23	8.4	3.2		0
2		0	0	0	0	21	41	21	8.0	2.8		0
3		0	0	0	0	21	39	20	8.0	2.6		0
4		0	13	0	0	21	37	20	8.0	2.3		0
5		0	6.7	0	0	20	36	21	7.4	2.0		0
6		0	0	0	16	44	35	20	7.0	1.8		0
7		0	0	0	20	51	34	18	6.7	1.5		0
8		0	0	0	13	57	31	17	6.4	1.2		0
9		0	0	0	1.1	37	31	17	6.4	1.1		0
10		0	0	0	47	26	31	17	6.1	.24		0
11		0	0	0	943	72	30	18	7.4	.98		0
12		0	0	0	172	50	29	18	7.0	.52		0
13		0	0	0	110	37	31	18	7.0	.54		0
14		1.3	0	0	67	34	31	17	7.0	.75		0
15		0	0	0	44	33	29	17	6.7	0		0
16		17	0	6.6	35	32	28	16	6.4	0		0
17		11	0	13	30	30	27	15	6.1	0		0
18		0	0	9.4	26	29	27	15	5.6	0		0
19		0	0	20	24	30	27	15	5.6	0		0
20		0	0	4.4	22	73	26	14	5.3	0		0
21		0	0	3.3	24	62	26	13	5.0	0		0
22		0	0	.68	25	48	24	13	5.0	0		0
23		0	0	.12	29	43	24	12	5.0	0		0
24		0	0	0	24	43	24	12	4.6	0		0
25		0	0	0	24	44	24	11	4.6	0		0
26		0	0	0	23	46	24	11	4.4	0		0
27		0	0	0	27	47	26	10	3.9	0		0
28		0	0	0	37	50	28	9.2	3.7	0		0
29		0	0	0	------	46	28	8.5	3.5	0		.18
30		0	0	0	------	43	28	8.5	3.3	0		.36
31		------	0	0	------	42	------	8.5	------	0		------
TOTAL	0	29.3	19.7	57.50	1,783.1	1,254	898	473.7	179.5	21.53	0	.54
MEAN	0	.98	.64	1.85	63.7	40.5	29.9	15.3	5.98	.69	0	.018
MAX	0	17	13	20	943	73	42	23	8.4	3.2	0	.36
MIN	0	0	0	0	0	20	24	8.5	3.3	0	0	0
AC-FT	0	58	39	114	3,540	2,490	1,780	940	356	43	0	1.1

CAL YR 1972 TOTAL 560.50 MEAN 1.53 MAX 18 MIN 0 AC-FT 1,110
WTR YR 1973 TOTAL 4,716.87 MEAN 12.9 MAX 943 MIN 0 AC-FT 9,360

PEAK DISCHARGE (BASE, 200 CFS).--Feb. 11 (0400) 1,580 cfs (6.78 ft); Feb. 28 (0100) 211 cfs (4.77 ft).

11062000 LYTLE CREEK NEAR FONTANA, CALIF.--Continued

COMBINED DISCHARGE, IN CUBIC FEET PER SECOND, OF LYTLE CREEK, SOUTHERN CALIFORNIA EDISON CO.'S LYTLE CREEK CONDUIT, AND FONTANA UNION WATER CO.'S INFILTRATION LINE, NEAR FONTANA, CALIF., WATER YEAR OCTOBER 1972 TO SEPTEMBER 1973

DAY	OCT	NOV	DEC	JAN	FEB	MAR	APR	MAY	JUN	JUL	AUG	SEP
1	14	15	18	17	20	56	81	52	36	33	25	27
2	14	15	18	18	20	52	80	49	36	32	25	27
3	14	15	17	18	21	52	77	48	36	31	24	27
4	14	15	27	18	22	53	75	48	36	30	24	27
5	14	15	18	17	20	50	73	49	35	31	24	27
6	14	15	19	17	33	66	71	48	35	31	24	27
7	14	15	20	17	30	57	69	46	34	31	25	27
8	14	15	20	17	33	68	65	45	34	29	25	27
9	14	15	20	18	28	59	65	44	34	29	24	27
10	14	15	20	17	72	58	65	45	34	28	24	27
11	14	16	20	17	945	95	64	46	35	29	24	27
12	14	15	19	17	175	73	62	46	35	28	24	27
13	14	17	19	17	116	75	65	46	35	28	23	27
14	14	20	19	17	74	80	66	45	35	28	23	27
15	14	18	19	17	61	74	63	45	34	28	23	27
16	14	29	19	26	65	72	60	44	34	28	23	27
17	14	18	19	26	60	70	61	43	34	28	23	27
18	15	21	18	31	55	68	59	43	33	28	23	27
19	15	20	18	36	51	69	59	43	33	28	23	27
20	15	20	18	27	45	94	58	42	32	26	23	27
21	15	20	18	23	49	93	57	41	34	26	23	27
22	14	19	18	19	49	89	54	41	35	26	23	27
23	12	19	18	21	56	84	53	40	35	26	24	27
24	14	19	18	23	53	86	52	40	35	26	24	27
25	15	18	17	23	53	88	52	39	35	25	24	28
26	15	18	18	22	52	84	54	39	35	26	24	28
27	15	18	18	22	56	80	54	38	34	26	24	28
28	15	18	18	21	59	84	56	37	34	25	25	28
29	15	18	18	20	------	83	57	36	34	25	25	29
30	14	18	18	21	------	85	57	36	33	25	26	29
31	15	------	18	20	------	82	------	37	------	26	27	------
TOTAL	442	529	582	640	2,373	2,279	1,884	1,341	1,034	866	745	818
MEAN	14.3	17.6	18.8	20.6	84.8	73.5	62.8	43.3	34.5	27.9	24.0	27.3
MAX	15	29	27	36	945	95	81	52	36	33	27	29
MIN	12	15	17	17	20	50	52	36	32	25	23	27
AC-FT	877	1,050	1,150	1,270	4,710	4,520	3,740	2,660	2,050	1,720	1,480	1,620

CAL YR 1972 TOTAL 6,886 MEAN 18.8 MAX 42 MIN 11 AC-FT 13,660
WTR YR 1973 TOTAL 13,533 MEAN 37.1 MAX 945 MIN 12 AC-FT 26,840

PEAK DISCHARGE (BASE, 200 CFS).--Feb. 11 (0400) 1,590 cfs; Feb. 28 (0100) 233 cfs.

11063500 LONE PINE CREEK NEAR KEENBROOK, CALIF.

LOCATION.--Lat 34°15'59", long 117°27'47", in SE¼SE¼SW¼ sec.12, T.2 N., R.6 W., San Bernardino County, on right bank 50 ft upstream from the Atchison, Topeka and Santa Fe Railway Co. bridge, 150 ft upstream from mouth, and 1.1 miles north of Keenbrook.

DRAINAGE AREA.--15.1 sq mi.

PERIOD OF RECORD.--December 1919 to September 1938, June 1949 to current year.

GAGE.--Water-stage recorder and concrete control. Datum of gage is 2,605.92 ft above mean sea level. Prior to Mar. 2, 1938, water-stage recorder (destroyed by flood) and Mar. 2 to Sept. 30, 1938, nonrecording gage at same site at datum 0.98 ft higher.

AVERAGE DISCHARGE.--42 years (1920-38, 1949-73), 1.45 cfs (1,050 acre-ft per year).

EXTREMES.--Current year: Maximum discharge, 435 cfs Feb. 11 (gage height, 4.84 ft); minimum daily, 0.68 cfs Feb. 9, Sept. 13-15, 19-21.
Period of record: Maximum discharge, 6,180 cfs Mar. 2, 1938, on basis of slope-area measurement of maximum flow; no flow Aug. 6-8, Sept. 29-30, 1965.

REMARKS.--Records good. No regulation or diversion above station. See schematic diagram of Santa Ana River basin.

DISCHARGE, IN CUBIC FEET PER SECOND, WATER YEAR OCTOBER 1972 TO SEPTEMBER 1973

DAY	OCT	NOV	DEC	JAN	FEB	MAR	APR	MAY	JUN	JUL	AUG	SEP
1	.96	1.0	1.2	1.2	.78	1.2	1.8	1.6	1.5	1.2	1.1	.78
2	.99	1.0	1.2	1.1	.78	1.3	1.7	1.6	1.5	1.1	1.1	.78
3	.99	1.1	1.2	1.1	.78	1.4	1.7	1.5	1.5	1.1	.99	.78
4	.99	1.0	3.8	1.1	.88	1.5	1.8	1.5	1.5	1.2	.99	.88
5	.97	.99	2.1	1.1	.88	1.6	1.9	1.6	1.5	1.2	.99	.88
6	.96	.99	1.8	1.1	1.9	2.8	1.6	1.6	1.5	1.2	.99	.88
7	.99	.99	1.8	1.1	.99	1.8	1.8	1.6	1.5	1.2	1.1	.78
8	.99	.99	1.8	1.1	.78	2.6	1.8	1.6	1.5	1.2	1.1	.78
9	.99	.99	1.6	1.1	.68	1.2	1.8	1.6	1.5	1.2	.99	.78
10	.99	1.1	1.4	1.1	2.8	1.1	1.8	1.6	1.5	1.1	.88	.78
11	.97	1.2	1.4	1.1	82	7.9	1.6	1.6	1.5	1.1	.88	.88
12	.99	1.1	1.6	1.1	3.6	3.4	1.8	1.6	1.5	1.1	.88	.78
13	.99	1.1	.98	1.1	2.6	2.4	1.9	1.6	1.4	1.1	.88	.68
14	.99	2.2	.98	1.1	1.5	1.9	1.9	1.6	1.4	1.1	.78	.68
15	.99	1.2	.99	1.0	1.4	1.6	1.9	1.6	1.4	1.1	.78	.68
16	.99	3.9	.99	3.0	1.2	1.5	1.8	1.6	1.4	.99	.78	.78
17	.99	1.5	.99	1.1	1.2	1.4	1.8	1.6	1.4	.99	.78	.78
18	.99	1.1	1.0	5.6	1.4	1.4	1.8	1.6	1.4	.99	.78	.78
19	1.0	1.0	1.1	1.6	1.6	1.4	1.8	1.6	1.4	.99	.78	.68
20	1.0	1.0	1.1	.78	1.6	6.3	1.8	1.6	1.2	.99	.78	.68
21	1.1	1.0	1.1	.78	1.8	3.2	1.8	1.6	1.2	1.1	.78	.68
22	1.1	1.0	1.1	.78	1.6	2.4	1.6	1.6	1.2	.99	.78	.78
23	1.0	1.0	1.1	.78	1.6	1.8	1.6	1.6	1.2	.99	.78	.88
24	1.0	1.0	1.1	.78	1.6	1.6	1.6	1.6	1.2	.99	.78	.78
25	1.0	1.0	1.1	.88	1.6	1.6	1.6	1.6	1.1	.99	.78	.78
26	1.0	1.0	1.1	.99	1.6	1.5	1.5	1.6	1.1	.99	.78	.88
27	1.0	1.0	1.1	.88	1.6	1.5	1.6	1.5	1.2	.99	.78	.88
28	1.0	1.1	1.1	.78	3.6	1.5	1.6	1.5	1.2	.99	.78	.78
29	.99	1.2	1.1	.78	------	1.5	1.6	1.5	1.2	1.1	.78	.88
30	1.0	1.2	1.2	.78	------	1.6	1.6	1.5	1.2	1.1	.78	.88
31	.99	------	1.2	.78	------	1.8	------	1.5	------	1.1	.78	------
TOTAL	30.90	35.95	41.33	37.57	124.35	65.7	51.9	48.9	40.8	33.48	26.91	23.70
MEAN	1.00	1.20	1.33	1.21	4.44	2.12	1.73	1.58	1.36	1.08	.87	.79
MAX	1.1	3.9	3.8	5.6	82	7.9	1.9	1.6	1.5	1.2	1.1	.88
MIN	.96	.99	.98	.78	.68	1.1	1.5	1.5	1.1	.99	.78	.68
AC-FT	61	71	82	75	247	130	103	97	81	66	53	47

CAL YR 1972 TOTAL 503.25 MEAN 1.38 MAX 3.9 MIN .81 AC-FT 998
WTR YR 1973 TOTAL 561.49 MEAN 1.54 MAX 82 MIN .68 AC-FT 1,110

PEAK DISCHARGE (BASE, 80 CFS).--Feb. 11 (0615) 435 cfs (4.84 ft).

11063510 CAJON CREEK BELOW LONE PINE CREEK, NEAR KEENBROOK, CALIF.

LOCATION.--Lat 34°15'58", long 117°27'47", in NE¼NW¼ sec.13, T.2 N., R.6 W., San Bernardino County, on right bank 25 ft downstream from confluence with Lone Pine Creek, 1.1 miles north of Keenbrook.

DRAINAGE AREA.--55.8 sq mi.

PERIOD OF RECORD.--October 1971 to current year.

GAGE.--Water-stage recorder. Altitude of gage is 2,600 ft (from topographic map).

EXTREMES.--Current year: Maximum discharge, 1,780 cfs Feb. 11 (gage height, 13.50 ft), on basis of slope-conveyance computation of maximum flow; minimum daily, 3.0 cfs Nov. 15.

REMARKS.--Records fair. No regulation or diversion above station. See schematic diagram of Santa Ana River basin.

DISCHARGE, IN CUBIC FEET PER SECOND, WATER YEAR OCTOBER 1972 TO SEPTEMBER 1973

DAY	OCT	NOV	DEC	JAN	FEB	MAR	APR	MAY	JUN	JUL	AUG	SEP
1	3.5	3.7	6.0	4.6	11	25	17	8.7	7.0	5.4	3.5	4.5
2	3.5	3.7	6.0	4.3	11	12	16	8.7	7.0	5.4	3.4	4.5
3	3.5	3.7	6.0	4.3	11	13	16	8.7	6.9	5.4	3.4	4.5
4	3.5	3.7	56	4.3	10	14	16	9.0	6.9	5.4	3.6	4.5
5	3.5	3.7	15	4.3	10	15	16	9.0	6.8	5.2	4.0	4.6
6	3.5	3.7	9.0	4.3	36	52	15	9.0	6.8	5.2	4.2	4.6
7	3.5	3.7	9.0	4.3	31	35	15	9.0	6.7	5.2	4.5	4.6
8	3.5	3.7	9.0	4.3	26	62	14	8.4	6.7	5.2	4.5	4.6
9	3.5	3.7	6.0	4.3	20	35	13	8.7	6.6	5.2	4.0	4.6
10	3.5	3.7	5.0	4.3	52	27	12	8.7	6.6	5.1	4.0	4.6
11	3.5	5.0	5.8	4.3	467	129	11	8.7	6.3	5.0	4.1	4.5
12	3.5	4.8	5.3	4.3	107	70	11	8.4	5.3	4.9	4.1	4.2
13	3.5	4.6	5.3	4.3	83	33	11	8.0	5.8	4.9	4.1	4.0
14	3.5	11	5.3	4.3	43	24	11	8.0	6.3	4.8	4.1	4.0
15	3.5	3.0	5.3	4.3	35	19	11	7.8	6.3	4.7	4.1	4.0
16	3.5	72	5.3	11	25	16	11	7.8	6.6	4.6	4.2	4.0
17	3.5	22	5.3	5.0	18	15	10	7.8	6.6	4.5	4.2	4.0
18	3.5	10	5.3	47	12	15	10	7.8	6.6	4.5	4.2	4.0
19	4.3	6.0	5.3	52	12	15	10	7.2	6.6	4.4	4.2	3.4
20	3.9	5.0	5.0	24	12	79	9.4	6.9	6.3	4.3	4.2	3.4
21	3.7	5.0	5.0	23	12	50	8.7	6.9	6.0	4.2	4.3	3.5
22	3.7	5.0	5.0	22	12	44	8.7	6.9	5.8	4.2	4.3	3.6
23	3.7	5.0	5.0	19	12	35	8.0	6.9	5.8	4.1	4.3	3.6
24	3.7	5.0	5.0	16	12	25	8.0	8.0	5.6	4.0	4.3	3.6
25	3.7	5.0	5.0	14	12	19	7.8	8.0	5.6	3.9	4.3	3.6
26	3.7	5.0	5.0	13	12	16	8.0	8.0	5.6	3.9	4.4	3.6
27	3.7	5.0	5.0	11	27	15	8.4	6.7	5.6	3.8	4.4	3.6
28	3.7	5.4	5.0	11	38	15	8.4	7.2	5.6	3.8	4.4	3.6
29	3.7	6.0	5.0	11	------	15	8.4	7.1	5.6	3.7	4.4	3.6
30	3.7	6.0	5.0	12	------	16	8.4	7.1	5.4	3.6	4.4	3.6
31	3.7	------	5.0	11	------	17	------	7.0	------	3.6	4.5	------
TOTAL	111.9	232.8	229.2	366.8	1,169	972	338.2	246.1	187.3	142.1	128.6	121.0
MEAN	3.61	7.76	7.39	11.8	41.8	31.4	11.3	7.94	6.24	4.58	4.15	4.03
MAX	4.3	72	56	52	467	129	17	9.0	7.0	5.4	4.5	4.6
MIN	3.5	3.0	5.0	4.3	10	12	7.8	6.7	5.3	3.6	3.4	3.4
AC-FT	222	462	455	728	2,320	1,930	671	488	372	282	255	240

CAL YR 1972 TOTAL 2,120.8 MEAN 5.79 MAX 72 MIN 2.8 AC-FT 4,210
WTR YR 1973 TOTAL 4,245.0 MEAN 11.6 MAX 467 MIN 3.0 AC-FT 8,420

PEAK DISCHARGE (BASE, 150 CFS)

DATE	TIME	G.H.	DISCHARGE	DATE	TIME	G.H.	DISCHARGE
11-16	1200	8.87	187	3-6	1345	8.94	223
1-18	2015	9.21	278	3-11	0900	9.20	275
2-11	0545	13.50	1,780	3-20	0630	8.71	177
2-27	2300	9.30	300				

NOTE.--No gage-height record Nov. 19 to Dec. 13, June 24 to Sept. 30.

11063680 DEVIL CANYON CREEK NEAR SAN BERNARDINO, CALIF.

LOCATION.--Lat 34°12'30", long 117°19'50", in Muscupiabe Grant, San Bernardino County, on left bank 0.6 mile downstream from confluence of East and West Forks, and 7.5 miles northwest of San Bernardino. Prior to Sept. 1, 1972, at site 0.4 mile downstream.

DRAINAGE AREA.--5.49 sq mi.

PERIOD OF RECORD.--November 1911 to September 1912, October 1913 to September 1914, December 1919 to current year. Monthly figures only for January 1914, published in WSP 1315-B.

GAGE.--Water-stage recorder on creek; flowmeter on diversion. Altitude of gage is 2,080 ft (from topographic map). Prior to December 1919, nonrecording gage at site 0.5 mile downstream at different datum. December 1919 to July 1969, at site 0.4 mile downstream at different datum. July 1969 to September 1972, present gage used as supplementary gage. May 9, 1973, to Sept. 30, 1973, supplementary gage at site 0.5 mile downstream at different datum.

AVERAGE DISCHARGE (Creek only).--54 years (1913-14, 1920-73), 1.89 cfs (1,370 acre-ft per year).
(Combined creek and diversion).--40 years (1913-14, 1934-73), 3.56 cfs (2,580 acre-ft per year).

EXTREMES.--Current year: Maximum discharge, 255 cfs Feb. 11 (gage height, 6.51 ft, from floodmark); no flow many days.
Period of record (1913-14, 1919 to current year): Maximum discharge, 3,720 cfs Jan. 25, 1969 (gage height, 5.40 ft, site and datum then in use), on basis of slope-area measurement of maximum flow; no flow at times in most years.

REMARKS.--Records poor. No regulation above station. City of San Bernardino diverts above station for municipal supply. See schematic diagram of Santa Ana River basin.

COOPERATION.--Records of diversion furnished by city of San Bernardino.

DISCHARGE, IN CUBIC FEET PER SECOND, WATER YEAR OCTOBER 1972 TO SEPTEMBER 1973

DAY	OCT	NOV	DEC	JAN	FEB	MAR	APR	MAY	JUN	JUL	AUG	SEP
1	0	0	.01	1.5	1.4	6.0	6.8	4.7	.80	.80	.56	.72
2	0	0	0	1.0	1.4	5.0	6.4	4.4	.56	.80	.56	1.0
3	0	0	0	.90	2.3	5.0	6.4	3.9	.56	1.1	.56	.80
4	0	0	6.1	1.5	1.6	5.3	6.2	3.6	.80	1.5	.56	.78
5	0	0	5.6	1.4	1.5	5.3	5.9	3.8	.80	1.5	.56	.90
6	0	0	1.7	1.1	6.8	7.7	5.9	3.4	1.1	1.5	.56	.76
7	0	0	5.3	1.1	4.1	8.0	6.1	3.1	1.5	1.5	.72	.77
8	0	0	5.3	1.0	2.7	9.0	5.9	3.0	1.1	.80	.71	.80
9	0	.11	1.6	1.4	2.6	7.3	5.9	2.9	1.1	.80	.85	.80
10	0	.39	.90	1.3	10	6.4	5.9	2.1	1.1	.80	.82	.96
11	0	.75	.90	1.2	63	18	5.8	2.8	.80	.56	.87	1.1
12	0	.33	.60	1.2	31	13	5.8	2.8	.80	.56	.79	1.1
13	0	.16	.21	.95	14	9.6	5.8	2.1	.80	.56	.70	1.1
14	0	1.7	.60	.90	10	11	5.8	2.1	.80	.56	.64	1.4
15	0	.48	1.3	.95	7.7	10	5.8	2.1	.80	.56	.74	1.1
16	0	7.5	1.4	4.8	5.9	10	5.8	1.5	.80	.56	.56	1.1
17	0	4.5	.95	5.4	5.1	9.6	5.8	1.5	.80	.56	.76	1.1
18	0	1.4	.90	8.2	5.0	9.2	5.8	1.1	.80	.56	.65	1.3
19	4.0	.95	.75	18	4.6	8.8	5.6	1.1	.80	.56	.56	1.5
20	2.0	.60	1.0	7.5	4.5	15	5.4	1.1	.56	.80	.75	1.1
21	1.0	.30	1.1	3.2	5.0	8.6	5.3	1.1	.56	.80	.74	1.1
22	.50	.30	.95	1.9	5.0	8.6	5.3	1.1	.56	.56	.72	.99
23	.20	.30	1.0	1.7	5.0	8.0	5.1	.80	.80	.56	.80	1.1
24	.10	.27	.65	1.4	4.9	7.5	5.1	.80	1.1	.56	.80	1.1
25	0	.27	.70	1.4	4.9	7.1	5.1	.80	1.5	.56	.71	.92
26	0	.27	.65	1.5	4.8	7.0	4.7	1.1	1.1	.56	.75	.54
27	0	.12	.52	1.4	4.9	6.9	4.7	.80	1.1	.56	.80	.56
28	0	0	1.0	1.3	10	7.8	4.8	.80	.80	.40	.82	.56
29	0	0	1.2	1.2	------	7.5	4.7	.40	1.5	.40	.80	.56
30	0	0	1.2	1.2	------	6.9	4.8	.56	1.1	.40	.84	.56
31	0	------	1.2	1.4	------	6.9	------	.80	------	.56	.92	------
TOTAL	7.80	20.70	45.29	78.90	229.7	262.0	168.4	62.16	27.30	22.86	22.18	28.18
MEAN	.25	.69	1.46	2.55	8.20	8.45	5.61	2.01	.91	.74	.72	.94
MAX	4.0	7.5	6.1	18	63	18	6.8	4.7	1.5	1.5	.92	1.5
MIN	0	0	0	.90	1.4	5.0	4.7	.40	.56	.40	.56	.54
AC-FT	15	41	90	156	456	520	334	123	54	45	44	56
(a)	66	61	133	186	491	542	353	207	149	111	94	103

CAL YR 1972 TOTAL 234.28 MEAN .64 MAX 7.5 MIN 0 AC-FT 465 a 969
WTR YR 1973 TOTAL 975.47 MEAN 2.67 MAX 63 MIN 0 AC-FT 1,930 a 2,496

PEAK DISCHARGE (BASE, 25 CFS)

DATE	TIME	G.H.	DISCHARGE	DATE	TIME	G.H.	DISCHARGE
11-16	1615	3.80	31	2-11	0700	6.51	255
12-4	1300	3.75	29	3-8	1045	4.86	94
1-18	2330	3.77	31	3-11	1015	3.71	90

a Combined discharge, in acre-feet, of Devil Canyon Creek and city of San Bernardino diversion.

11065000 LYTLE CREEK AT COLTON, CALIF.

LOCATION.--Lat 34°04'44", long 117°18'17", in San Bernardino Grant, San Bernardino County, on right bank 400 ft downstream from Colton Avenue, 1,930 ft upstream from outlet end of channel, and 1.3 miles northeast of Colton.

DRAINAGE AREA.--172 sq mi.

PERIOD OF RECORD.--October 1957 to current year.

GAGE.--Water-stage recorder. Datum of gage is 974.67 ft above mean sea level (Corps of Engineers bench mark).

AVERAGE DISCHARGE (Natural flow).--16 years, 6.98 cfs (5,060 acre-ft per year).

EXTREMES.--Current year: Maximum discharge, 4,810 cfs Feb. 11 (gage height, 6.52 ft); no flow most of year. Period of record: Maximum discharge, 16,800 cfs Jan. 25, 1969 (gage height, 13.6 ft, from floodmarks), from rating curve extended above 4,200 cfs on basis of discharge for design flood at gage height 21.4 ft; no flow most of each year.

REMARKS.--Records good except those below 1 cfs, which are poor. Flow partly regulated by Lytle Creek spreading grounds 3.2 miles upstream. Diversions above station for irrigation, power development, domestic use, and ground-water replenishment. California Water Project released 3,300 acre-ft to channel above gage May 7-28. This water is not included in the average discharge computations. See schematic diagram of Santa Ana River basin.

DISCHARGE, IN CUBIC FEET PER SECOND, WATER YEAR OCTOBER 1972 TO SEPTEMBER 1973

DAY	OCT	NOV	DEC	JAN	FEB	MAR	APR	MAY	JUN	JUL	AUG	SEP
1	0	0	0	0	0	0		0				0
2	0	0	0	0	0	0		0				0
3	0	0	0	0	1.8	0		0				0
4	0	0	14	0	0	0		0				0
5	0	0	0	0	0	0		0				0
6	0	0	0	0	29	19		0				0
7	0	0	1.9	0	.03	.83		47				.02
8	0	0	.40	0	0	9.5		61				0
9	0	0	0	.05	0	0		46				0
10	0	0	0	0	0	0		37				.03
11	0	23	0	0	1,020	7.0		37				0
12	0	0	0	0	26	2.1		76				0
13	0	0	0	0	9.4	0		21				0
14	0	17	0	0	0	0		79				0
15	0	0	0	0	.07	0		101				0
16	0	26	0	30	0	0		56				0
17	0	0	0	.79	0	0		61				0
18	0	0	0	34	0	0		65				.03
19	.19	0	0	2.6	0	0		70				0
20	0	0	0	0	0	12		70				0
21	0	0	0	0	0	37		91				0
22	0	0	0	0	0	21		105				0
23	0	0	0	0	0	0		105				0
24	0	0	0	0	0	0		105				0
25	0	0	0	1.0	0	0		112				0
26	0	0	0	0	0	0		103				0
27	0	0	0	0	12	0		150				0
28	0	0	0	0	16	3.1		65				0
29	0	0	0	0	------	0		0				0
30	0	0	0	4.0	------	0		0				0
31	0	------	0	0	------	0	------	0	------			------
TOTAL	.19	66	16.30	73.15	1,114.30	111.53	0	1,663	0	0	0	.08
MEAN	.006	2.20	.53	2.36	39.8	3.60	0	53.6	0	0	0	.003
MAX	.19	26	14	34	1,020	37	0	150	0	0	0	.03
MIN	0	0	0	0	0	0	0	0	0	0	0	0
AC-FT	.4	131	32	145	2,210	221	0	3,300	0	0	0	.2

CAL YR 1972 TOTAL 98.76 MEAN .24 MAX 26 MIN 0 AC-FT 176
WTR YR 1973 TOTAL 3,044.55 MEAN 8.34 MAX 1,020 MIN 0 AC-FT 6,040

11066440 SANTA ANA RIVER AT MISSION BOULEVARD, AT RIVERSIDE, CALIF.

LOCATION.--Lat 33°59'28", long 117°23'36", in Jurupa Grant, Riverside County, near right bank on downstream end of pier of Mission Boulevard Bridge between Rubidoux and Riverside.

DRAINAGE AREA.--810 sq mi.

PERIOD OF RECORD.--February 1971 to current year.

GAGE.--Water-stage recorder. Datum of gage is 758.52 ft above mean sea level.

EXTREMES.--Current year: Maximum discharge, 7,500 cfs Feb. 11 (gage height, 11.30 ft), from rating extended above 5,400 cfs; no flow most of year.
Period of record: Maximum discharge, 7,500 cfs Feb. 11, 1973 (gage height, 11.30 ft), from rating extended above 5,400 cfs; no flow most of each year.

REMARKS.--Records fair. This is a project station the purpose of which is to record surface flow entering Riverside Narrows from upper Santa Ana River drainage. California Water Project released 11,270 acre-ft to basin into Lytle Creek (see sta 11065000) and into Santa Ana River at point 7.7 miles upstream. Imported water reached this station as surface flow during the months of May, June, and July. See schematic diagram of Santa Ana River basin.

DISCHARGE, IN CUBIC FEET PER SECOND, WATER YEAR OCTOBER 1972 TO SEPTEMBER 1973

DAY	OCT	NOV	DEC	JAN	FEB	MAR	APR	MAY	JUN	JUL	AUG	SEP
1		0	0	0	0	0		0	9.4	0		
2		0	0	0	0	0		0	10	0		
3		0	0	0	0	0		0	1.2	0		
4		0	62	0	0	0		0	0	0		
5		0	0	0	0	0		0	0	0		
6		0	0	0	220	59		0	0	.05		
7		0	16	0	10	216		0	0	2.5		
8		0	7.9	0	0	239		3.4	0	2.4		
9		0	0	0	0	.30		9.6	0	2.4		
10		0	0	0	0	0		3.7	0	2.5		
11		0	0	0	2,300	290		5.8	0	1.6		
12		0	0	0	440	235		3.0	0	0		
13		0	0	0	199	0		0	0	0		
14		150	0	0	0	0		2.9	0	1.6		
15		15	0	0	20	0		9.4	0	3.1		
16		398	0			.11		6.7	0	3.1		
17		25	0		0	.20		5.0	0	3.1		
18		0	0		0	.12		5.0	0	3.3		
19		0	0		0	.02		4.5	0	2.2		
20		0	0	0	0	222		4.5	0	4.0		
21		0	0	0	0	.11		4.0	0	5.0		
22		0	0	0	0	115		4.0	0	4.4		
23		0	0	0	0	0		3.7	0	4.2		
24		0	0	0	0	0		3.3	0	3.5		
25		0	0	0	0	0		4.0	0	3.1		
26		0	0	0	0	0		4.2	0	2.8		
27		0	0	0	0	0		1.0	0	0		
28		0	0	0	80	0		.20	0	0		
29		0	0	0	------	0		6.1	0	0		
30		0	0	0	------	0		7.4	0	0		
31		------	0	0	------	0	------	7.4	------	0		------
TOTAL	0	588	85.9	711	3,269	1,376.86	0	108.80	20.6	54.85	0	0
MEAN	0	19.6	2.77	22.9	117	44.4	0	3.51	.69	1.77	0	0
MAX	0	398	62	391	2,300	290	0	9.6	10	5.0	0	0
MIN	0	0	0	0	0	0	0	0	0	0	0	0
AC-FT	0	1,170	170	1,410	6,480	2,730	0	216	41	109	0	0

CAL YR 1972 TOTAL 673.90 MEAN 1.84 MAX 398 MIN 0 AC-FT 1,340
WTR YR 1973 TOTAL 6,215.01 MEAN 17.0 MAX 2,300 MIN 0 AC-FT 12,330

PEAK DISCHARGE (BASE, 500 CFS)

DATE	TIME	G.H.	DISCHARGE	DATE	TIME	G.H.	DISCHARGE
11-14	0530	10.05	1,300	2-13	0415	9.75	1,300
11-16	2030	10.09	1,420	3-7	0300	9.82	1,520
12-4	1800	9.82	798	3-8	1630	9.81	1,485
1-17	0200	10.37	2,470	3-11	1900	9.87	1,660
1-19	0100	10.52	3,090	3-20	1315	9.78	1,390
2-11	--	11.30	7,500	3-22	0245	9.55	855

11066460 SANTA ANA RIVER AT MWD CROSSING, NEAR ARLINGTON, CALIF.

LOCATION.--Lat 33°58'04", long 117°26'46", in NE¼NE¼SW¼ sec.30, T.2 S., R.5 W., Riverside County, on left bank 300 ft upstream from MWD crossing, 0.7 mile downstream from Union Pacific Railroad bridge, 1.2 miles upstream from bridge on Van Buren Boulevard, and 3.3 miles north of Arlington.

DRAINAGE AREA.--854 sq mi.

PERIOD OF RECORD.--March 1970 to current year.

GAGE.--Water-stage recorder. Altitude of gage is 685 ft (from topographic map).

EXTREMES.--Current year: Maximum discharge, 6,950 cfs Feb. 11 (gage height, 11.21 ft), from rating extended above 600 cfs by flood routing; minimum daily, 16 cfs Aug. 18, 19.

Period of record: Maximum discharge, 6,950 cfs Feb. 11, 1973 (gage height, 11.21 ft), from rating extended above 600 cfs by flood routing; minimum daily, 16 cfs Aug. 18, 19, 1973.

Maximum discharge since at least 1927, 100,000 cfs Mar. 2, 1938, on basis of slope-area measurement at site 1.2 miles downstream.

Flood of Jan. 22, 1862, 320,000 cfs, by slope-conveyance measurement at site 8.1 miles upstream. Stage at that site was 5 feet higher than Mar. 2, 1938.

REMARKS.--Records good below 50 cfs and poor above. Flow partly regulated by Big Bear Lake (see sta 11049000). Natural streamflow affected by ground-water withdrawals, diversions for irrigation, and return flows from irrigated areas. California Water Project released 11,270 acre-ft to basin into Lytle Creek (see sta 11065000) and into Santa Ana River at point 11.4 miles upstream. Imported water did not reach this station as surface flow. The records at this station are equivalent to those collected at 11066500 Santa Ana River at Riverside Narrows, near Arlington minus the flow at 11066480 Riverside Water Quality Control Plant at Riverside Narrows, near Arlington. Records of chemical analyses for the current year are published in Part 2 of this report. See schematic diagram of Santa Ana River basin.

DISCHARGE, IN CUBIC FEET PER SECOND, WATER YEAR OCTOBER 1972 TO SEPTEMBER 1973

DAY	OCT	NOV	DEC	JAN	FEB	MAR	APR	MAY	JUN	JUL	AUG	SEP
1	17	23	28	26	27	47	26	27	27	20	18	18
2	18	24	27	27	31	47	24	27	27	20	18	19
3	22	24	27	27	32	54	21	26	27	20	18	19
4	21	22	157	27	32	48	19	25	27	20	18	19
5	20	22	48	26	30	42	21	26	27	21	19	20
6	20	23	28	28	254	56	22	24	27	22	19	19
7	19	22	44	30	66	330	18	23	26	22	18	19
8	22	22	41	34	35	170	[illegible]	22	26	23	18	19
9	22	26	28	40	28	90		24	26	23	19	20
10	22	24	27	33	30	82	[illegible]		25	24	18	19
11	22	54	27	29	2,520	242	23	28	25	26	18	19
12	22	18	26	28	676	234	25	31	24	24	18	20
13	24	19	26	29	424	80	24	31	24	23	18	20
14	23	205	26	30	48	69	24	33	23	22	19	20
15	22	38	28	29	43	38	25	37	23	22	18	19
16	23	308	31	105	30	30	28	34	22	21	17	21
17	22	90	37	275	32	29	28	31	21	21	17	20
18	22	36	38	82	29	36	28	29	21	20	16	19
19	24	30	38	504	29	43	28	28	20	20	16	21
20	25	26	29	58	33	320	26	28	20	20	18	24
21	24	25	28	48	31	113	24	27	20	19	18	22
22	24	23	27	43	32	134	26	27	20	19	17	21
23	24	24	25	37	31	66	26	27	20	19	17	21
24	24	25	25	33	30	56	27	27	20	19	17	21
25	23	25	26	36	32	50	28	28	20	19	18	21
26	24	26	26	36	34	30	26	27	20	18	18	19
27	28	26	27	36	34	31	27	25	20	18	18	19
28	23	27	26	35	295	41	27	24	20	18	19	17
29	26	28	27	37	------	29	27	26	20	18	18	18
30	25	28	27	43	------	32	27	28	20	18	19	19
31	22	------	27	31	------	32	------	28	------	18	21	------
TOTAL	699	1,313	1,052	1,882	4,948	2,701	737	855	688	637	558	592
MEAN	22.5	43.8	33.9	60.7	177	87.1	24.6	27.6	22.9	20.5	18.0	19.7
MAX	28	308	157	504	2,520	330	28	37	27	26	21	24
MIN	17	18	25	26	27	29	18	22	20	18	16	17
AC-FT	1,390	2,600	2,090	3,730	9,810	5,360	1,460	1,700	1,360	1,260	1,110	1,170

CAL YR 1972 TOTAL 9,198 MEAN 25.2 MAX 308 MIN 17 AC-FT 18,240
WTR YR 1973 TOTAL 16,662 MEAN 45.6 MAX 2,520 MIN 16 AC-FT 33,050

PEAK DISCHARGE (BASE, 500 CFS)

DATE	TIME	G.H.	DISCHARGE	DATE	TIME	G.H.	DISCHARGE
11-14	1930	9.46	1,690	2-11	0945	11.21	6,950
11-16	2200	9.04	1,090	2-13	0515	8.91	1,790
12-4	1915	8.33	620	3-7	0330	8.69	1,140
1-17	0230	8.88	1,600	3-8	1730	8.56	1,010
1-19	0215	9.06	1,850	3-11	2045	8.64	1,510
2-6	0700	7.64	588	3-20	1300	8.19	1,110

11066480 RIVERSIDE WATER QUALITY CONTROL PLANT AT RIVERSIDE NARROWS, NEAR ARLINGTON, CALIF.

LOCATION.--Lat 33°57'53", long 117°27'26", in SE¼NE¼SE¼ sec.25, T.2 S., R.6 W., Riverside County, at effluent end of chlorine contact chambers, 0.4 mile upstream from Van Buren Boulevard, and 3.1 miles northwest of Arlington.

PERIOD OF RECORD.--October 1947 to current year. Prior to May 25, 1967, published as "Sheehan ditch."

GAGE.--Water-stage recorders and concrete controls for plants Nos. 1 and 2. Altitude of gage is 690 ft (from topographic map).

EXTREMES.--Period of record: Maximum daily discharge, 32 cfs Apr. 6, 1969; minimum daily, 17 cfs May 11, June 8, 1969.

REMARKS.--Records good. Discharge reported herein is total effluent from city of Riverside's Water Quality Control Plants Nos. 1 and 2, released to river 0.4 mile upstream from Santa Ana River at Riverside Narrows (see sta 11066500). Records of chemical analyses for the current year are published in Part 2 of this report.

DISCHARGE, IN CUBIC FEET PER SECOND, WATER YEAR OCTOBER 1972 TO SEPTEMBER 1973

DAY	OCT	NOV	DEC	JAN	FEB	MAR	APR	MAY	JUN	JUL	AUG	SEP
1	23	25	26	23	26	27	25	27	26	24	26	26
2	25	25	26	28	26	28	28	27	26	28	27	26
3	24	25	24	27	25	28	27	28	25	27	26	26
4	24	24	23	26	25	27	28	28	27	25	25	27
5	26	23	27	26	27	28	28	26	28	27	24	27
6	26	26	27	25	28	28	28	25	27	27	28	27
7	24	25	27	25	27	28	26	28	27	26	28	27
8	23	25	26	27	27	29	25	27	28	24	27	26
9	26	26	26	26	26	28	27	28	26	27	27	24
10	25	26	24	26	26	26	27	27	25	27	27	28
11	25	26	26	27	27	26	26	27	28	28	26	28
12	25	25	26	27	29	29	27	26	28	28	25	27
13	25	27	26	24	29	28	27	24	28	27	27	27
14	24	26	26	25	28	28	26	27	27	26	27	28
15	23	27	25	27	27	28	26	27	27	24	27	26
16	26	29	25	28	27	28	28	28	25	28	27	26
17	25	27	24	28	26	27	28	28	24	27	27	28
18	25	25	26	29	27	25	28	28	27	27	22	27
19	25	26	26	28	28	28	28	26	27	28	27	28
20	25	27	26	26	25	28	27	25	27	26	28	27
21	23	26	26	24	27	28	26	27	27	25	25	27
22	22	27	26	27	27	28	24	27	28	23	26	26
23	25	23	25	27	28	28	28	27	26	27	26	25
24	25	24	24	26	27	27	27	28	24	26	29	28
25	25	24	21	27	26	25	27	26	29	26	30	28
26	25	24	25	27	27	27	27	25	28	27	28	28
27	25	27	26	25	28	26	28	23	28	27	27	27
28	24	27	25	25	28	27	26	25	28	25	25	27
29	23	27	25	27	------	27	25	27	28	23	25	27
30	25	27	25	26	------	27	27	27	25	27	25	27
31	24	------	25	26	------	26	------	27	------	26	25	------
TOTAL	760	771	790	814	754	848	805	826	804	813	819	806
MEAN	24.5	25.7	25.5	26.3	26.9	27.4	26.8	26.6	26.8	26.2	26.4	26.9
MAX	26	29	26	28	29	29	28	28	29	28	30	28
MIN	22	23	21	23	25	25	24	23	24	23	22	24
AC-FT	1,510	1,530	1,570	1,610	1,500	1,680	1,600	1,640	1,590	1,610	1,620	1,600

CAL YR 1972 TOTAL 9,509 MEAN 26.0 MAX 30 MIN 21 AC-FT 18,860
WTR YR 1973 TOTAL 9,610 MEAN 26.3 MAX 30 MIN 21 AC-FT 19,060

11066500 SANTA ANA RIVER AT RIVERSIDE NARROWS, NEAR ARLINGTON, CALIF.

LOCATION.--Lat 33°57'53", long 117°27'55", in SW¼NE¼SW¼ sec.25, T.2 S., R.6 W., Riverside County, on right bank at downstream side of Van Buren Boulevard bridge, 1.8 miles downstream from Union Pacific Railroad bridge, 3.3 miles northwest of Arlington, and 12 miles upstream from Temescal Creek.

DRAINAGE AREA.--855 sq mi.

PERIOD OF RECORD.--October 1927 to September 1973 (discontinued). Monthly discharge only for October 1927 to January 1929, December 1937 to April 1938, published in WSP 1315-B.

GAGE.--Water-stage recorder. Datum of gage is 666.87 ft above mean sea level (levels by Riverside County Engineer). See WSP 1735 for history of changes prior to Jan. 17, 1955.

EXTREMES.--Current year: Maximum discharge, about 7,000 cfs Feb. 11, by flood routing; minimum daily, 38 cfs Aug. 18.

Period of record: Maximum discharge, 100,000 cfs Mar. 2, 1938, on basis of slope-area measurement of maximum flow; minimum daily, 11 cfs Oct. 17, 26, 1966.

Flood of Jan. 22, 1862, 320,000 cfs, by slope-conveyance measurement at site 9.3 miles upstream. Stage at that site was 5 ft higher than Mar. 2, 1938.

REMARKS.--Records poor. Flow partly regulated by Big Bear Lake (see sta 11049000). Natural streamflow affected by ground-water withdrawals, diversions for irrigation, and return flow from irrigated areas. California Water Project released 11,270 acre-ft to basin into Lytle Creek (see sta 11065000) and into Santa Ana River at point 12.6 miles upstream. Imported water did not reach this station as surface flow. Riverside Water Quality Control Plant water released to river 0.4 mile upstream. See schematic diagram of Santa Ana River basin.

DISCHARGE, IN CUBIC FEET PER SECOND, WATER YEAR OCTOBER 1972 TO SEPTEMBER 1973

DAY	OCT	NOV	DEC	JAN	FEB	MAR	APR	MAY	JUN	JUL	AUG	SEP
1	40	48	54	49	53	74	51	54	53	43	44	44
2	43	48	53	55	57	75	52	54	53	48	45	45
3	46	48	51	54	57	82	48	55	52	48	44	45
4	45	46	185	53	57	75	47	55	54	44	43	46
5	46	45	75	52	57	70	49	54	55	46	43	47
6	45	47	55	53	282	84	50	50	54	48	47	46
7	46	46	71	55	93	358	44	51	53	48	46	46
8	46	47	67	61	63	199	45	49	54	48	45	45
9	43	52	54	66	55	118	47	52	53	49	46	44
10	45	50	51	59	56	108	49	54	50	54	45	47
11	48	80	53	56	2,550	268	49	55	54	54	44	47
12	47	43	52	55	705	263	52	57	53	52	43	47
13	48	46	52	53	453	108	51	55	52	50	45	47
14	47	231	52	55	76	97	50	62	51	48	46	48
15	46	65	53	56	70	66	51	62	50	46	45	45
16	49	337	56	133	57	58	56	60	47	49	44	47
17	47	117	61	303	58	66	56	58	45	48	44	48
18	46	61	64	110	56	61	56	56	47	47	38	46
19	49	56	64	532	57	71	55	51	47	48	43	49
20	50	53	55	84	58	348	54	50	47	46	46	51
21	49	51	54	72	58	141	50	54	48	44	43	49
22	48	50	53	70	59	162	50	54	48	42	43	47
23	50	47	50	64	59	94	51	54	47	46	43	46
24	50	49	49	59	57	83	52	55	45	45	46	49
25	50	49	47	63	58	75	54	55	48	45	48	49
26	48	50	51	63	61	57	54	51	48	45	46	47
27	47	53	53	60	62	57	54	50	48	45	45	46
28	45	54	51	62	323	68	54	50	48	43	44	44
29	46	55	52	64	------	56	54	52	48	41	43	45
30	48	55	52	69	------	59	54	55	47	45	44	46
31	47	------	52	57	------	58	------	55	------	44	46	------
TOTAL	1,450	2,079	1,842	2,697	5,707	3,559	1,539	1,679	1,499	1,449	1,377	1,398
MEAN	46.8	69.3	59.4	87.0	204	115	51.3	54.2	50.0	46.7	44.4	46.6
MAX	50	337	185	532	2,550	358	56	62	55	54	48	51
MIN	40	43	47	49	53	56	44	49	45	41	38	44
AC-FT	2,880	4,120	3,650	5,350	11,320	7,060	3,050	3,330	2,970	2,870	2,730	2,770

CAL YR 1972 TOTAL 18,579 MEAN 50.8 MAX 337 MIN 40 AC-FT 36,850
WTR YR 1973 TOTAL 26,275 MEAN 72.0 MAX 2,550 MIN 38 AC-FT 52,120

PEAK DISCHARGE (BASE, 500 CFS)

DATE	TIME	G.H.	DISCHARGE	DATE	TIME	G.H.	DISCHARGE
11-4	unknown	--	about 1,700	2-11	unknown	--	about 7,000
11-16	do	--	about 1,100	2-13	do	--	about 1,800
12-4	do	--	about 650	3-7	do	--	about 1,200
1-17	do	--	about 1,600	3-8	do	--	about 1,000
1-19	do	--	about 1,900	3-11	do	--	about 1,500
2-6	0745	5.62	650	3-20	do	--	about 1,100

NOTE.--No gage-height record Nov. 9 to Feb. 1, Feb. 9 to Apr. 17, June 13 to Sept. 30.

11067890 SANTA ANA RIVER AT PRADO PARK, NEAR CORONA, CALIF.

LOCATION.--Lat 33°55'42", long 117°35'44", in Jurupa Grant, Riverside County, in Prado Park on right bank 0.4 mile upstream from Auburndale Bridge, and 4.1 miles northwest of Corona.

DRAINAGE AREA.--1,010 sq mi.

PERIOD OF RECORD.--March 1971 to current year. Records May 1930 to November 1966 (irrigation seasons only), October 1966 to September 1968 at site 0.4 mile downstream (at Auburndale Bridge, sta 11068000), equivalent if diversion to Durkee ditch added.

GAGE.--Water-stage recorder. Altitude of gage is 560 ft (from topographic map).

EXTREMES.--Current year: Maximum discharge, about 5,400 cfs Feb. 11, by flood routing; minimum daily, 19 cfs Aug. 26-28.
Period of record: Maximum discharge, about 5,400 cfs Feb. 11, 1973, by flood routing; minimum daily, 10 cfs Aug. 7, Sept. 23, 1971.

REMARKS.--Records good below 100 cfs and poor above. Flow partly regulated by Big Bear Lake (see sta 11049000). Natural streamflow affected by ground-water withdrawals, diversions for irrigation, and return flows from irrigated areas. California Water Project released 11,270 acre-ft to basin (see sta 11066460). See schematic diagram of Santa Ana River basin.

DISCHARGE, IN CUBIC FEET PER SECOND, WATER YEAR OCTOBER 1972 TO SEPTEMBER 1973

DAY	OCT	NOV	DEC	JAN	FEB	MAR	APR	MAY	JUN	JUL	AUG	SEP
1	30	33	34	37	56	141	64	46	48	38	22	27
2	32	34	36	38	56	116	64	45	48	35	27	27
3	31	35	40	39	61	111	63	44	45	31	29	27
4	29	33	195	40	70	126	60	45	43	28	31	32
5	25	34	226	41	84	106	61	45	46	29	29	32
6	25	34	81	41	271	114	63	43	46	28	29	29
7	27	36	100	42	100	549	63	40	43	28	28	28
8	29	38	97	46	104	356	61	39	41	28	27	28
9	31	38	66	57	85	180	61	39	40	35	26	27
10	30	40	57	61	84	66	61	39	38	35	26	28
11	27	80	45	60	2,100	200	60	43	37	36	24	31
12	25	64	39	58	1,200	411	60	43	37	36	23	31
13	26	47	38	54	645	91	57	48	39	46	23	31
14	28	92	40	52	123	111	54	46	36	45	25	32
15	28	205	42	52	157	77	54	49	36	41	23	32
16	32	274	43	130	123	75	55	58	39	44	25	29
17	32	340	51	380	73	77	52	58	35	39	24	43
18	33	85	51	99	78	78	49	58	35	40	23	45
19	38	68	49	535	86	80	54	55	34	46	22	46
20	43	61	49	120	82	203	48	55	32	40	24	52
21	40	60	48	85	91	91	48	54	32	45	25	48
22	38	60	48	82	82	160	48	48	35	43	23	43
23	38	52	44	81	77	63	48	51	36	40	24	41
24	39	50	42	82	75	55	48	51	40	35	20	39
25	34	40	39	85	84	52	48	54	39	30	27	39
26	36	41	39	91	104	55	48	54	39	28	19	33
27	39	33	41	78	106	64	45	50	39	25	19	27
28	37	34	39	70	300	80	45	48	36	23	19	29
29	36	36	38	70	------	91	45	49	37	22	21	28
30	34	33	38	70	------	63	45	52	40	21	22	28
31	32	------	38	67	------	64	------	48	------	21	26	------
TOTAL	1,004	2,110	1,833	2,843	6,557	4,106	1,632	1,497	1,171	1,061	755	1,012
MEAN	32.4	70.3	59.1	91.7	234	132	54.4	48.3	39.0	34.2	24.4	33.7
MAX	43	340	226	535	2,100	549	64	58	48	46	31	52
MIN	25	33	34	37	56	52	45	39	32	21	19	27
AC-FT	1,990	4,190	3,640	5,640	13,010	8,140	3,240	2,970	2,320	2,100	1,500	2,010

CAL YR 1972 TOTAL 14,995 MEAN 41.0 MAX 340 MIN 14 AC-FT 29,740
WTR YR 1973 TOTAL 25,581 MEAN 70.1 MAX 2,100 MIN 19 AC-FT 50,740

PEAK DISCHARGE (BASE, 500 CFS)

DATE	TIME	G.H.	DISCHARGE	DATE	TIME	G.H.	DISCHARGE
11-14	2400	5.60	702	2-13	0930	5.28	1,900
11-16	1945	5.52	654	3-7	0615	4.15	1,370
12-4	2130	5.22	744	3-8	2000	4.01	1,220
1-19	0845	5.18	1,090	3-11	2400	3.99	1,220
2-11	unknown	--	about 5,400	3-20	1730	3.31	543

NOTE.--No gage-height record Feb. 11, 12.

11069000 LAKE HEMET NEAR IDYLLWILD, CALIF.

LOCATION.--Lat 33°39'56", long 116°42'19", in SE¼SW¼NE¼ sec.7, T.6 S., R.3 E., Riverside County, on upstream face near right end of dam on South Fork San Jacinto River, 5 miles southeast of Idyllwild, and 6.5 miles upstream from mouth.

DRAINAGE AREA.--65.6 sq mi.

PERIOD OF RECORD.--October 1961 to current year.

GAGE.--Nonrecording gage read once daily. Datum of gage is 4,201.5 ft above mean sea level (levels by Lake Hemet Municipal Water District).

EXTREMES.--Current year: Maximum contents observed, 8,590 acre-ft May 23 to June 24 (elevation, 4,324.00 ft); minimum, 5,370 acre-ft Oct. 18-20, Oct. 31 to Nov. 2 (elevation, 4,311.92 ft).
Period of record: Maximum contents, 13,879 acre-ft Feb. 25, 1969 (elevation, 4,337.58 ft); minimum, 264 acre-ft Nov. 19, 1962, Nov. 19, 1963 (elevation, 4,266.9 ft).

REMARKS.--Lake is formed by single-arch dam. Dam was completed to a height of 110 ft in 1893; raised to 122.5 ft in 1895, and to 135 ft in 1923. Capacity table is dated February 1932 (furnished by Lake Hemet Municipal Water District). Lowest sluice gate silted (elevation, 4,222.6 ft). Capacity below spillway level (elevation, 4,333.0 ft), 11,882 acre-ft. Water is released from lake to South Fork San Jacinto River for domestic use and irrigation in the Hemet-San Jacinto Valley. See schematic diagram of Santa Ana River basin.

COOPERATION.--Elevations furnished by Lake Hemet Municipal Water District.

MONTHEND ELEVATION AND CONTENTS, WATER YEAR OCTOBER 1972 TO SEPTEMBER 1973

Date	Elevation (feet)a	Contents (acre-feet)	Change in contents (acre-feet)
Sept. 30	4,312.75	5,560	--
Oct. 31	4,311.92	5,370	-190
Nov. 30	4,312.50	5,510	+140
Dec. 31	4,313.50	5,740	+230
CAL YR 1972	--	--	-450
Jan. 31	4,314.42	5,960	+220
Feb. 28	4,316.92	6,590	+630
Mar. 31	4,321.58	7,860	+1,270
Apr. 30	4,323.50	8,440	+580
May 31	4,324.00	8,590	+150
June 30	4,323.92	8,570	-20
July 31	4,322.50	8,140	-430
Aug. 31	4,321.33	7,790	-350
Sept. 30	4,319.92	7,400	-390
WTR YR 1973	--	--	+1,840

a Elevation at 0800.

11069500 SAN JACINTO RIVER NEAR SAN JACINTO, CALIF.

LOCATION.--Lat 33°44'10", long 116°49'26", in NE¼NE¼SE¼ sec.13, T.5 S., R.1 E., Riverside County, on right bank 350 ft upstream from bridge on State Highway 74, 1 mile downstream from North Fork, and 8.3 miles southeast of San Jacinto.

DRAINAGE AREA.--141 sq mi.

PERIOD OF RECORD.--October 1920 to February 1927, March 1927 to current year. Records since Oct. 1, 1969, equivalent to prior records if lower diversion is deducted from flow past station. Combined records of river and diversions, October 1948 to current year. Monthly discharge only for October 1920 and July to September 1926, published in WSP 1315-B.

GAGE.--Water-stage recorder on river; water-stage recorder on upper canal; nonrecording gage on pipeline. Datum of gage is 1,982.75 ft above mean sea level (Corps of Engineers bench mark). See WSP 1735 for history of changes prior to Jan. 23, 1948. Prior to Oct. 1, 1969, at site 350 ft downstream at same datum.

AVERAGE DISCHARGE (River only).--48 years (1920-26, 1927-69), 18.0 cfs (13,040 acre-ft per year).
(Combined river and diversions).--25 years (1948-73), 18.9 cfs (13,690 acre-ft per year).

EXTREMES (River only).--Current year: Maximum discharge, 278 cfs Dec. 4 (gage height, 10.67 ft); no flow many days.
Period of record: Maximum discharge, 45,000 cfs Feb. 16, 1927, on basis of slope-area measurement of maximum flow; no flow for several months in each year.
(Combined flow).--Current year: Maximum discharge, 286 cfs Dec. 4; minimum daily, 0.84 cfs Jan. 7.

REMARKS.--Records poor. Flow partly regulated by Lake Hemet (see sta 11069000). Lake Hemet Municipal Water District's upper canal diverts 4.0 miles above station. Fairview Land and Water Co.'s pipeline diverts water above station for domestic use (pipeline discontinued Dec. 31, 1972). Diversion above station began prior to 1920. See schematic diagram of Santa Ana River basin. Combined records are equivalent for period of record. For records of combined daily discharge of San Jacinto River and diversions, see following page.

COOPERATION.--Records of Fairview Land and Water Co.'s pipeline furnished by Lake Hemet Municipal Water District.

DISCHARGE, IN CUBIC FEET PER SECOND, WATER YEAR OCTOBER 1972 TO SEPTEMBER 1973

DAY	OCT	NOV	DEC	JAN	FEB	MAR	APR	MAY	JUN	JUL	AUG	SEP
1	0	.03	.10	1.5	1.7	35	83	56	28	5.7	.19	
2	0	.01	.10	.50	1.7	30	67	46	27	5.8	.20	
3	0	0	.08	.15	2.0	30	59	43	25	6.0	.16	
4	0	0	43	.15	2.8	28	56	42	24	5.8	.11	
5	0	0	10	.15	2.9	26	46	40	24	5.4	.07	
6	0	0	4.0	.15	6.5	24	50	36	25	3.6	.03	
7	0	0	1.0	.15	9.4	65	68	34	24	2.7	0	
8	0	0	.53	.15	9.1	51	83	38	23	1.9	0	
9	0	0	.53	.19	7.3	48	79	43	21	1.7	0	
10	0	0	.33	.27	6.7	42	79	47	19	1.7	0	
11	0	1.5	.30	.17	55	81	93	44	13	.06	0	
12	0	.22	.28	.11	38	83	102	42	9.2	.07	0	
13	0	.12	.25	.09	67	82	108	38	7.0	.08	0	
14	0	.27	.23	.09	46	68	94	36	6.0	.09	0	
15	0	.13	.20	.09	37	51	72	34	6.0	.10	0	
16	0	6.3	.18	.13	31	45	64	31	5.0	.11	0	
17	0	3.4	.15	16	26	48	69	29	5.0	.13	0	
18	0	1.2	.13	8.5	22	45	72	29	4.0	.12	0	
19	0	.24	.10	36	19	40	64	27	5.0	.11	0	
20	2.5	.41	.05	11	17	64	58	25	4.8	.13	0	
21	2.4	.79	.04	4.6	17	55	45	24	5.6	.13	0	
22	1.1	.19	.09	3.7	16	100	40	21	5.5	.14	0	
23	.21	.15	0	3.0	14	94	42	20	5.9	.19	0	
24	.13	.11	.02	2.6	13	123	53	20	5.2	.36	0	
25	.13	.11	0	2.3	11	126	65	23	5.7	.33	0	
26	.09	.10	0	2.1	11	117	78	29	5.1	.35	0	
27	.11	.10	.01	2.0	11	110	83	28	5.0	.29	0	
28	.09	.10	0	1.8	47	132	83	27	5.2	.27	0	
29	.07	.10	.02	1.7	------	115	76	27	5.4	.24	0	
30	.04	.10	32	1.6	------	102	80	27	5.5	.23	0	
31	.02	------	5.0	1.7	------	93	------	28	------	.20	0	------
TOTAL	6.89	15.68	98.72	102.64	548.1	2,153	2,111	1,034	359.1	44.03	.76	0
MEAN	.22	.52	3.18	3.31	19.6	69.5	70.4	33.4	12.0	1.42	.025	0
MAX	2.5	6.3	43	36	67	132	108	56	28	6.0	.20	0
MIN	0	0	0	.09	1.7	24	40	20	4.0	.06	0	0
AC-FT	14	31	196	204	1,090	4,270	4,190	2,050	712	87	1.5	0

CAL YR 1972 TOTAL 314.49 MEAN .86 MAX 43 MIN 0 AC-FT 624
WTR YR 1973 TOTAL 6,473.92 MEAN 17.7 MAX 132 MIN 0 AC-FT 12,840

PEAK DISCHARGE (BASE, 100 CFS)

DATE	TIME	G.H.	DISCHARGE	DATE	TIME	G.H.	DISCHARGE
12-4	1900	10.67	278	3-11	1915	10.36	184
2-11	1130	9.99	144	3-28	1930	10.47	210

11069500 SAN JACINTO RIVER NEAR SAN JACINTO, CALIF.--Continued

COMBINED DISCHARGE, IN CUBIC FEET PER SECOND, OF SAN JACINTO RIVER, LAKE HEMET WATER CO.'S UPPER AND LOWER CANALS, AND FAIRVIEW LAND AND WATER CO.'S PIPELINE, NEAR SAN JACINTO, CALIF., WATER YEAR OCTOBER 1972 TO SEPTEMBER 1973

DAY	OCT	NOV	DEC	JAN	FEB	MAR	APR	MAY	JUN	JUL	AUG	SEP
1	2.0	1.4	.98	2.4	2.6	37	85	64	31	8.1	3.9	3.6
2	2.2	1.4	.74	1.4	2.6	31	69	56	30	7.7	4.0	3.5
3	2.2	1.4	.75	1.1	2.9	30	61	52	28	7.4	4.1	3.5
4	2.6	1.4	46	1.2	3.7	31	59	55	27	7.0	5.2	4.7
5	2.5	1.4	18	1.0	3.8	31	49	57	26	6.7	4.6	4.9
6	2.4	1.4	9.2	.90	7.4	29	53	52	25	6.4	4.1	4.6
7	2.6	1.4	4.9	.84	10	67	71	49	24	6.2	4.1	4.6
8	2.7	1.4	3.7	.86	10	51	87	54	23	5.9	4.0	4.8
9	2.9	1.4	2.3	1.7	8.4	48	82	60	22	5.6	4.0	4.7
10	3.2	1.4	1.8	3.8	7.8	42	82	64	21	5.4	4.0	4.9
11	3.1	6.7	1.4	1.8	62	82	97	60	20	5.1	4.0	4.9
12	3.1	4.3	1.3	1.4	52	85	106	58	19	4.7	4.0	4.8
13	3.1	2.4	1.3	1.3	83	82	111	55	18	4.0	4.9	4.7
14	3.1	2.1	1.3	1.2	60	68	97	52	17	4.1	5.1	4.7
15	2.8	2.1	1.2	1.2	47	54	75	50	17	3.9	4.6	4.5
16	2.6	11	1.2	1.7	39	50	67	47	16	3.9	4.4	4.6
17	2.5	8.0	1.1	21	32	53	72	45	15	3.9	4.6	4.6
18	2.6	5.2	1.2	12	27	50	75	44	14	4.1	5.0	5.0
19	3.2	4.2	1.9	47	23	45	67	42	14	4.1	5.1	5.3
20	8.4	3.2	2.4	23	20	69	61	41	13	4.2	5.4	5.7
21	6.9	3.5	2.1	16	20	60	49	39	13	4.3	5.3	6.1
22	4.6	2.9	3.4	10	19	105	45	36	12	4.4	5.1	6.5
23	2.2	2.8	3.4	5.2	17	96	50	34	12	4.4	4.8	6.8
24	1.5	1.8	2.0	4.1	15	123	61	33	11	4.5	4.6	6.6
25	1.7	1.8	1.3	3.6	13	126	73	32	11	4.2	4.5	6.2
26	1.7	1.2	1.2	3.4	12	117	86	34	10	4.2	4.5	5.5
27	1.6	.80	1.2	3.2	11	111	91	34	9.6	4.2	4.3	5.2
28	1.7	.78	1.2	2.9	49	135	91	32	9.2	4.2	4.0	5.1
29	1.7	.78	1.2	4.3	------	117	83	31	8.8	4.0	3.9	5.0
30	1.4	.78	33	5.5	------	102	88	31	8.5	4.1	3.9	4.9
31	1.3	------	6.1	3.4	------	93	------	31	------	4.1	3.9	------
TOTAL	86.1	80.34	158.77	188.40	660.2	2,220	2,243	1,424	525.1	155.0	137.9	150.5
MEAN	2.78	2.68	5.12	6.08	23.6	71.6	74.8	45.9	17.5	5.00	4.45	5.02
MAX	8.4	11	46	47	83	135	111	64	31	8.1	5.4	6.8
MIN	1.3	.78	.74	.84	2.6	29	45	31	8.5	3.9	3.9	3.5
AC-FT	171	159	315	374	1,310	4,400	4,450	2,820	1,040	307	274	299

CAL YR 1972 TOTAL 1,093.17 MEAN 2.99 MAX 46 MIN .49 AC-FT 2,170
WTR YR 1973 TOTAL 8,029.31 MEAN 22.0 MAX 135 MIN .74 AC-FT 15,930

PEAK DISCHARGE (BASE, 150 CFS)

DATE	TIME	DISCHARGE	DATE	TIME	DISCHARGE
12-4	1900	286	3-11	1915	188
2-11	2000	147	3-28	1930	215

11070050 BAUTISTA CREEK AT VALLE VISTA, CALIF.

LOCATION.--Lat 33°44'04", long 116°53'33", in SE¼NE¼SE¼ sec.17, T.5 S., R.1 E., Riverside County, on left levee of flood channel, 1.0 mile south of Valle Vista.

DRAINAGE AREA.--47.2 sq mi.

PERIOD OF RECORD.--October 1969 to current year.

GAGE.--Water-stage recorder. Altitude of gage is 1,835 ft (from topographic map).

EXTREMES.--Current year: Maximum discharge, 318 cfs Feb. 11 (gage height, 1.97 ft), from rating curve extended as explained below; no flow for part of year.
Period of record: Maximum discharge, 318 cfs Feb. 11, 1973 (gage height, 1.97 ft), from rating curve extended above 80 cfs on basis of computation of flow in concrete-lined channel at gage heights 1.50, 2.00, and 3.00 ft; no flow for many days in each year.

REMARKS.--Records fair. No regulation above station. Diversion above station for irrigation of about 15 acres. Some infiltration by detention dam, 1.5 miles upstream.

DISCHARGE, IN CUBIC FEET PER SECOND, WATER YEAR OCTOBER 1972 TO SEPTEMBER 1973

DAY	OCT	NOV	DEC	JAN	FEB	MAR	APR	MAY	JUN	JUL	AUG	SEP
1	0	0	.01	.01	.03	.31	.31	.45	1.8	.60	0	0
2	0	.04	0	.01	.02	.45	.45	0	4.1	.31	0	0
3	0	.14	0	.03	.04	.45	.31	0	8.4	.31	0	.60
4	0	.10	11	.31	.02	.45	.31	0	4.7	0	.45	.60
5	0	.07	.23	.26	.01	.31	.10	.45	2.6	0	.45	0
6	0	.06	.09	.04	.02	.60	0	2.2	1.0	.31	.45	0
7	0	0	.17	.05	.02	1.4	0	2.2	.60	.31	0	0
8	0	0	.57	.03	0	9.0	0	1.7	0	0	0	0
9	0	.34	.43	.79	0	.60	0	2.2	2.2	0	0	.45
10	0	.24	.33	1.1	0	.31	0	.45	1.0	0	0	0
11	0	1.9	.31	.05	56	27	0	0	0	0	0	0
12	0	0	.10	.09	4.6	2.2	0	0	0	0	0	0
13	0	0	0	0	15	3.9	0	1.0	0	0	0	0
14	0	2.0	0	0	.45	.81	2.2	2.2	0	0	0	0
15	0	.35	.04	0	.31	.45	2.6	4.7	0	0	0	0
16	0	9.9	.07	.05	.31	.81	1.4	2.6	0	0	0	0
17	0	.21	0	0	.31	.31	.31	.81	.60	0	0	0
18	0	.14	0	6.0	.31	.31	.45	1.0	.45	0	0	0
19	0	.14	0	1.9	.31	.60	.31	2.2	0	0	0	0
20	2.0	.14	0	.07	.31	12	.60	2.6	0	0	.45	0
21	0	.05	0	.04	25	1.0	.31	1.4	0	0	0	0
22	0	.06	.07	.68	.81	6.6	.45	1.7	0	0	0	0
23	0	.09	.18	.93	.60	.60	.45	3.1	0	0	0	0
24	0	.06	.10	.31	.81	.60	.45	3.9	.31	0	0	0
25	0	.09	.10	.28	.81	.60	.60	3.9	.60	0	0	0
26	0	.09	.03	.31	.60	.45	.60	3.1	0	0	0	0
27	0	.03	0	0	.60	.45	.31	2.6	0	0	0	0
28	0	0	0	0	1.7	3.9	1.0	.97	0	0	0	0
29	0	0	0	0	------	.45	3.1	.32	.31	0	0	0
30	0	0	0	0	------	.45	2.2	.44	.31	0	0	0
31	.03	------	0	.02	------	.31	------	.35	------	0	0	------
TOTAL	2.03	16.24	13.83	13.36	109.00	77.68	18.82	48.54	28.98	1.84	1.80	1.65
MEAN	.066	.54	.45	.43	3.89	2.51	.63	1.57	.97	.059	.058	.055
MAX	2.0	9.9	11	6.0	56	27	3.1	4.7	8.4	.60	.45	.60
MIN	0	0	0	0	0	.31	0	0	0	0	0	0
AC-FT	4.0	32	27	26	216	154	37	96	57	3.6	3.6	3.3

CAL YR 1972 TOTAL 49.11 MEAN .13 MAX 11 MIN 0 AC-FT 97
WTR YR 1973 TOTAL 333.77 MEAN .91 MAX 56 MIN 0 AC-FT 662

PEAK DISCHARGE (BASE, 25 CFS)

DATE	TIME	G.H.	DISCHARGE	DATE	TIME	G.H.	DISCHARGE
11-14	1415	1.22	25	3-8	1415	1.50	113
11-16	1345	1.44	80	3-11	1930	1.92	308
12-4	1615	1.33	48	3-16	1245	1.22	31
1-18	2115	1.31	38	3-20	0930	1.41	83
2-11	1400	1.97	318	3-22	0845	1.24	36
2-13	0330	1.53	125	3-28	1815	1.46	99
2-21	1215	1.77	230				

11070270 PERRIS VALLEY STORM DRAIN AT NUEVO ROAD, NEAR PERRIS, CALIF.

LOCATION.--Lat 33°48'04", long 117°12'19", in SE¼SW¼SW¼ sec.21, T.4 S., R.3 W., Riverside County, 1.9 miles northeast of Perris, and 2.0 miles upstream from San Jacinto River.

DRAINAGE AREA.--93.3 sq mi.

PERIOD OF RECORD.--October 1969 to current year.

GAGE.--Water-stage recorder and rain-gage attachment. Altitude of gage is 1,413 ft (from topographic map).

EXTREMES.--Current year: Maximum discharge, 914 cfs Feb. 13 (gage height, 2.79 ft), from rating curve extended as explained below; no flow most of year.
Period of record: Maximum discharge, 914 cfs Feb. 13, 1973 (gage height, 2.79 ft), from rating curve extended above 400 cfs on basis of slope-area measurement at gage height 6.7 ft; no flow most of each year.
Flood of Feb. 25, 1969, 4,840 cfs, revised (gage height, 6.7 ft, from floodmarks), result of slope-area measurement by Riverside County Flood Control District.

REMARKS.--Records good. Some regulation by percolation basins above station. Extensive pumping for irrigation above station.

DISCHARGE, IN CUBIC FEET PER SECOND, WATER YEAR OCTOBER 1972 TO SEPTEMBER 1973

DAY	OCT	NOV	DEC	JAN	FEB	MAR	APR	MAY	JUN	JUL	AUG	SEP
1	0	0	0	0	0	.22						
2	0	0	0	0	0	0						
3	0	0	0	0	0	0						
4	0	0	31	0	0	0						
5	0	0	3.8	0	0	0						
6	0	0	0	0	22	.13						
7	0	0	3.4	0	2.0	16						
8	0	0	.67	0	3.5	24						
9	0	0	.05	0	0	5.9						
10	0	0	0	0	0	.03						
11	0	1.7	0	0	226	8.2						
12	0	0	0	0	28	35						
13	0	0	0	0	212	.45						
14	0	17	0	0	1.7	0						
15	0	4.6	0	0	25	0						
16	0	78	0	4.3	.84	0						
17	0	12	0	23	0	0						
18	0	0	0	18	0	0						
19	3.1	0	0	49	0	0						
20	.05	0	0	0	0	52						
21	0	0	0	0	0	4.6						
22	0	0	0	0	0	2.3						
23	0	0	0	0	0	0						
24	0	0	0	0	0	0						
25	0	0	0	0	0	0						
26	.56	0	0	.49	0	0						
27	7.9	0	0	0	0	0						
28	0	0	0	0	5.3	0						
29	0	0	0	0	------	0						
30	0	0	0	0	------	0						
31	0	------	0	0	------	0	------		------			------
TOTAL	11.61	113.3	38.92	94.79	526.34	148.83	0	0	0	0	0	0
MEAN	.37	3.78	1.26	3.06	18.8	4.80	0	0	0	0	0	0
MAX	7.9	78	31	49	226	52	0	0	0	0	0	0
MIN	0	0	0	0	0	0	0	0	0	0	0	0
AC-FT	23	225	77	188	1,040	295	0	0	0	0	0	0
(a)	.58	1.81	.63	1.99	2.92	1.92	0	.33	.04	0	0	0

CAL YR 1972 TOTAL 165.33 MEAN .45 MAX 78 MIN 0 AC-FT 328
WTR YR 1973 TOTAL 933.79 MEAN 2.56 MAX 226 MIN 0 AC-FT 1,850

a Precipitation, in inches.

11070375 SAN JACINTO RIVER AT RAILROAD CANYON WEIR, NEAR ELSINORE, CALIF.

LOCATION.--Lat 33°44'10", long 117°15'08", in SW¼SE¼NW¼ sec.13, T.5 S., R.4 W., Riverside County, on right bank 4.3 miles northeast of Railroad Canyon Dam, and 5.8 miles northeast of Elsinore.

DRAINAGE AREA.--562 sq mi.

PERIOD OF RECORD.--October 1951 to current year. Monthly discharge only prior to October 1971. Daily discharge available in district files.

GAGE.--Water-stage recorder. Altitude of gage is 1,400 ft (from topographic map). Prior to Sept. 28, 1960, at site 0.8 mile upstream at different datum.

AVERAGE DISCHARGE (River only).--22 years, 6.04 cfs (4,380 acre-ft per year).

EXTREMES.--Current year: Maximum discharge, 770 cfs Feb. 13; no flow most of year.
Period of record: Maximum discharge, 5,330 cfs Feb. 25, 1969, results of runoff study by Riverside County Flood Control and Water Conservation District; no flow for long periods in each year.

REMARKS.--Flow partially regulated by Lake Hemet (see sta 11069000). Diversions for irrigation and domestic use above station. At times imported Colorado River water is discharged into channel above station by Temescal Water Co. or Elsinore Valley Municipal Water District.

COOPERATION.--Records furnished by Riverside County Flood Control and Water Conservation District and reviewed by Geological Survey.

DISCHARGE, IN CUBIC FEET PER SECOND, WATER YEAR OCTOBER 1972 TO SEPTEMBER 1973

DAY	OCT	NOV	DEC	JAN	FEB	MAR	APR	MAY	JUN	JUL	AUG	SEP
1		0	0	0	0	2.4			0			
2		0	0	0	0	.61			0			
3		85	0	0	0	.03			0			
4		117	0	0	0	0			0			
5		122	29	0	0	0			0			
6		118	1.7	0	15	0			0			
7		36	1.8	0	5.9	14			0			
8		2.4	5.7	0	5.8	10			64			
9		1.3	3.2	0	1.0	33			104			
10		.32	1.2	0	.45	2.1			107			
11		0	.23	0	242	6.2			110			
12		0	0	0	67	66			112			
13		0	0	0	322	7.7			112			
14		.85	0	0	20	1.4			113			
15		15	0	0	11	.63			94			
16		45	0	0	10	.09			24			
17		48	0	65	.76	0			1.8			
18		3.7	0	3.8	.36	0			0			
19		1.1	0	143	.03	0			0			
20		.30	0	21	0	26			0			
21		0	0	1.5	0	27			0			
22		0	0	0	0	2.5			0			
23		0	0	0	0	.58			0			
24		0	0	0	0	0			0			
25		0	0	0	0	0			0			
26		0	0	0	0	0			0			
27		0	0	0	0	0			0			
28		0	0	4.5	.55	0			0			
29		0	0	1.3	------	0			0			
30		0	0	0	------	0			0			
31		------	0	0	------	0	------		------			------
TOTAL	0	595.97	42.83	240.1	701.85	200.24	0	0	841.8	0	0	0
MEAN	0	19.9	1.38	7.75	25.1	6.46	0	0	28.1	0	0	0
MAX	0	122	29	143	322	66	0	0	113	0	0	0
MIN	0	0	0	0	0	0	0	0	0	0	0	0
AC-FT	0	1,180	85	476	1,390	397	0	0	1,670	0	0	0
(a)	--	1,100	--	--	--	--	--	--	1,670	--	--	--

CAL YR 1972 TOTAL 640.60 MEAN 1.75 MAX 122 MIN 0 AC-FT 1,270 a 1,100
WTR YR 1973 TOTAL 2,622.79 MEAN 7.19 MAX 322 MIN 0 AC-FT 5,200 a 2,770

a Imported Colorado River water, in acre-feet.

11070475 SALT CREEK AT RAILROAD CANYON RESERVOIR, NEAR ELSINORE, CALIF.

LOCATION.--Lat 33°40'42", long 117°14'03", in SW¼SE¼NW¼ sec.6, T.6 S., R.3 W., Riverside County, on left bank at Railroad Canyon Road, 5.1 miles northeast of Elsinore.

DRAINAGE AREA.--122 sq mi (largely noncontributing except during extreme floods).

PERIOD OF RECORD.--October 1969 to current year.

GAGE.--Water-stage recorder. Datum of gage is 1,382.0 ft above mean sea level (levels by Riverside County Flood Control and Water Conservation District).

EXTREMES.--Current year: Maximum discharge, 85 cfs Feb. 13; no flow most of year.
Period of record: Maximum discharge, 163 cfs Feb. 11, 1970; no flow most of each year.
Flood of Feb. 25, 1969, 2,010 cfs, at site 1 mile upstream (from records of Riverside County Flood Control and Water Conservation District).

REMARKS.--No regulation or diversion above station.

COOPERATION.--Records furnished by Riverside County Flood Control and Water Conservation District and reviewed by Geological Survey.

DISCHARGE, IN CUBIC FEET PER SECOND, WATER YEAR OCTOBER 1972 TO SEPTEMBER 1973

DAY	OCT	NOV	DEC	JAN	FEB	MAR	APR	MAY	JUN	JUL	AUG	SEP
1		0		0	0	0						
2		0		0	0	0						
3		0		0	0	0						
4		0		0	0	0						
5		0		0	0	0						
6		0		0	0	0						
7		0		0	0	0						
8		0		0	0	.91						
9		0		0	0	1.6						
10		0		0	0	0						
11		0		0	21	5.6						
12		0		0	25	11						
13		0		0	55	4.2						
14		0		0	20	.33						
15		0		0	3.7	0						
16		3.2		0	.02	0						
17		13		1.4	0	0						
18		2.9		.19	0	0						
19		0		6.0	0	0						
20		0		.48	0	2.4						
21		0		0	0	1.0						
22		0		0	0	.52						
23		0		0	0	.36						
24		0		0	0	0						
25		0		0	0	0						
26		0		0	0	0						
27		0		0	0	0						
28		0		0	0	0						
29		0		0	------	0						
30		0		0	------	0						
31		------		0	------	0	------		------			------
TOTAL	0	19.1	0	8.07	124.72	27.92	0	0	0	0	0	0
MEAN	0	.64	0	.26	4.45	.90	0	0	0	0	0	0
MAX	0	13	0	6.0	55	11	0	0	0	0	0	0
MIN	0	0	0	0	0	0	0	0	0	0	0	0
AC-FT	0	38	0	16	247	55	0	0	0	0	0	0

CAL YR 1972 TOTAL 19.10 MEAN .052 MAX 13 MIN 0 AC-FT 38
WTR YR 1973 TOTAL 179.81 MEAN .49 MAX 55 MIN 0 AC-FT 357

11070500 SAN JACINTO RIVER NEAR ELSINORE, CALIF.

LOCATION.--Lat 33°39'51", long 117°17'35", in SE¼SE¼NE¼ sec.9, T.6 S., R.4 W., Riverside County, on right bank 2 miles east of Elsinore, and 2.1 miles downstream from Railroad Canyon Dam.

DRAINAGE AREA.--723 sq mi (revised).

PERIOD OF RECORD.--January 1916 to current year. Monthly figures 1927-50, adjusted for diversion, published in WSP 1315-B.

GAGE.--Water-stage recorder. Altitude of gage is 1,270 ft (from topographic map). Prior to Feb. 13, 1916, nonrecording gage at site 0.7 mile downstream at different datum. Feb. 13, 1916, to Oct. 27, 1921, nonrecording gage at present site at different datum.

EXTREMES.--Current year: Maximum discharge, 41 cfs Feb. 11 (gage height, 3.09 ft); no flow Aug. 26 to Sept. 30. Period of record: Maximum discharge, 16,000 cfs Feb. 17, 1927 (gage height, 11.8 ft), from rating curve extended above 2,000 cfs on basis of slope-area measurement of maximum flow; no flow for several months in most years.

REMARKS.--Records good. Flow partly regulated by Lake Hemet (see sta 11069000) and regulated since 1928 by Railroad Canyon Reservoir (capacity, 12,000 acre-ft) 2.1 miles above station. Diversion for irrigation and domestic use above Railroad Canyon Reservoir. Temescal Water Co. diverted 681 acre-ft during year from Railroad Canyon Reservoir for irrigation below station in vicinity of Corona. See schematic diagram of Santa Ana River basin.

DISCHARGE, IN CUBIC FEET PER SECOND, WATER YEAR OCTOBER 1972 TO SEPTEMBER 1973

DAY	OCT	NOV	DEC	JAN	FEB	MAR	APR	MAY	JUN	JUL	AUG	SEP
1	.18	.16	.44	.24	1.0	3.4	2.4	3.1	2.1	1.5	1.2	
2	.20	.18	.47	.23	3.1	3.3	2.4	2.9	1.9	1.5	1.4	
3	.20	.17	.48	.28	4.9	3.3	2.4	2.8	.89	1.8	1.4	
4	.19	.17	.62	.38	5.2	3.3	2.3	2.7	.76	2.5	1.1	
5	.17	.17	.68	.40	2.4	3.3	2.5	2.8	.71	2.5	1.0	
6	.15	.17	.55	.33	.86	3.4	2.7	2.8	1.3	2.5	1.3	
7	.11	.17	.65	.29	.74	3.6	2.8	2.7	1.1	2.8	1.4	
8	.12	.16	1.3	.28	.84	5.4	2.7	2.7	1.1	3.7	1.0	
9	.15	.15	.88	.37	.52	4.2	2.7	2.7	1.0	2.1	.95	
10	.18	.15	.62	.40	.47	3.3	2.7	2.7	1.0	1.6	1.4	
11	.18	.73	2.3	.31	11	3.7	2.8	2.7	.95	2.1	1.6	
12	.17	.55	3.2	.29	1.8	3.9	2.8	2.7	2.0	1.7	1.4	
13	.22	.27	3.3	.29	8.1	3.3	2.9	2.7	2.0	1.7	1.4	
14	.19	.92	3.3	.29	3.8	3.2	3.0	2.9	2.1	2.0	1.6	
15	.18	.79	3.3	.30	3.6	3.1	3.0	3.3	1.9	2.2	1.9	
16	.18	3.7	3.1	.48	3.4	3.0	3.0	3.3	.99	2.4	1.8	
17	.18	1.2	3.2	2.0	3.2	2.9	3.0	3.0	.09	2.4	1.6	
18	.18	.48	3.3	.69	3.2	2.9	3.1	2.7	1.4	1.8	1.6	
19	.17	.36	3.3	3.8	3.2	3.0	3.2	2.6	2.1	1.4	1.6	
20	.23	.33	3.3	.60	3.2	5.4	3.3	2.5	1.9	1.3	.76	
21	.22	.34	1.4	.44	3.2	3.6	3.3	2.5	2.3	1.1	.23	
22	.20	.32	.52	.37	3.2	10	2.9	2.1	2.3	1.1	.09	
23	.20	.30	.47	.32	3.2	16	2.9	2.5	2.1	1.1	.05	
24	.19	.29	.47	.32	3.2	16	3.1	2.5	2.1	1.2	.03	
25	.17	.29	.40	.33	3.2	16	1.7	2.5	2.1	1.3	.01	
26	.17	.30	.36	.36	3.2	16	1.4	2.6	1.9	1.3	0	
27	.19	.31	.32	.31	3.2	16	3.2	2.5	1.9	1.4	0	
28	.19	.39	.32	.31	3.6	16	3.2	2.4	1.9	1.6	0	
29	.19	.37	.29	.32	------	9.7	3.3	2.3	1.7	1.4	0	
30	.17	.45	.26	.33	------	2.7	3.2	1.8	1.5	1.4	0	
31	.15	------	.26	.32	------	2.4	------	1.6	------	1.4	0	------
TOTAL	5.58	14.34	43.36	15.98	90.53	195.3	83.9	81.6	47.09	55.8	27.82	0
MEAN	.18	.48	1.40	.52	3.23	6.30	2.80	2.63	1.57	1.80	.90	0
MAX	.23	3.7	3.3	3.8	11	16	3.3	3.3	2.3	3.7	1.9	0
MIN	.11	.15	.26	.23	.47	2.4	1.4	1.6	.09	1.1	0	0
AC-FT	11	28	86	32	180	387	166	162	93	111	55	0

CAL YR 1972 TOTAL 98.04 MEAN .27 MAX 3.7 MIN 0 AC-FT 194
WTR YR 1973 TOTAL 661.30 MEAN 1.81 MAX 16 MIN 0 AC-FT 1,310

11072000 TEMESCAL CREEK NEAR CORONA, CALIF.

LOCATION.--Lat 33°50'29", long 117°30'37", in El Sobrante de San Jacinto Grant, Riverside County, on left bank 0.2 mile downstream from unnamed tributary, and 3.8 miles southeast of Corona.

DRAINAGE AREA.--164 sq mi, excludes 768 sq mi above Lake Elsinore.

PERIOD OF RECORD.--October 1927 to current year. Monthly discharge only for the period October 1928 to January 1929, published in WSP 1315-B.

GAGE.--Water-stage recorder. Concrete control since June 12, 1970. Altitude of gage is 730 ft (from topographic map). Prior to Feb. 11, 1943, at datum 6.00 ft higher.

AVERAGE DISCHARGE.--46 years, 3.45 cfs (2,500 acre-ft per year).

EXTREMES.--Current year: Maximum discharge, 129 cfs Feb. 11 (gage height, 9.76 ft); no flow many days. Period of record: Maximum discharge, 14,900 cfs Mar. 2, 1938, on basis of slope-area measurement of maximum flow; no flow at times in most years.

REMARKS.--Records poor. Flow regulated by several storage reservoirs. Many diversions above station for irrigation. See schematic diagram of Santa Ana River basin.

DISCHARGE, IN CUBIC FEET PER SECOND, WATER YEAR OCTOBER 1972 TO SEPTEMBER 1973

DAY	OCT	NOV	DEC	JAN	FEB	MAR	APR	MAY	JUN	JUL	AUG	SEP
1	0	0	0	0	.17	2.1	2.4	.80	.34	.17		
2	0	0	0	0	.24	2.0	2.3	.78	.33	.17		
3	0	0	0	0	.33	1.9	2.2	.76	.33	.16		
4	0	0	2.6	0	.33	1.9	2.2	.73	.32	.15		
5	0	0	.01	0	.38	1.8	2.1	.70	.32	.15		
6	0	0	0	0	2.7	1.8	2.0	.68	.31	.14		
7	0	0	.04	0	.51	1.7	2.0	.66	.31	.13		
8	0	0	.45	0	.44	8.0	1.9	.64	.30	.13		
9	0	0	.06	0	.44	2.0	1.9	.62	.30	.12		
10	0	0	0	0	.44	1.8	1.9	.60	.30	.12		
11	0	.42	0	0	33	4.0	1.8	.58	.29	.11		
12	0	0	0	0	3.0	2.5	1.7	.56	.28	.11		
13	0	.33	0	0	16	2.3	1.7	.54	.28	.10		
14	0	25	0	0	4.0	2.0	1.6	.53	.27	.09		
15	0	.11	0	0	3.6	1.8	1.5	.52	.27	.06		
16	0	35	0	4.8	3.0	1.6	1.5	.50	.26	.04		
17	0	.17	0	.52	2.7	1.5	1.4	.49	.26	.02		
18	0	0	0	5.6	2.5	1.4	1.3	.47	.25	.01		
19	.04	0	0	1.1	2.3	1.3	1.3	.46	.25	.01		
20	0	0	0	1.4	2.2	19	1.2	.45	.24	0		
21	0	0	0	.36	2.1	5.5	1.2	.44	.23	0		
22	0	0	0	0	2.0	4.6	1.1	.43	.22	0		
23	0	0	0	0	1.9	4.1	1.1	.42	.22	0		
24	0	0	0	0	1.8	3.7	1.0	.41	.21	0		
25	0	0	0	0	1.7	3.4	1.0	.40	.21	0		
26	0	0	0	0	1.6	3.2	.96	.39	.20	0		
27	0	0	0	.03	1.5	3.0	.94	.38	.20	0		
28	0	0	0	.05	3.0	2.9	.90	.37	.19	0		
29	0	0	0	.08	------	2.7	.86	.36	.18	0		
30	0	0	0	.12	------	2.6	.84	.35	.18	0		
31	0	------	0	.17	------	2.5	------	.35	------	0		------
TOTAL	.04	61.03	3.16	14.23	93.88	100.6	45.80	16.37	7.85	1.99	0	0
MEAN	.001	2.03	.10	.46	3.35	3.25	1.53	.53	.26	.064	0	0
MAX	.04	35	2.6	5.6	33	19	2.4	.80	.34	.17	0	0
MIN	0	0	0	0	.17	1.3	.84	.35	.18	0	0	0
AC-FT	.08	121	6.3	28	186	200	91	32	16	3.9	0	0

CAL YR 1972 TOTAL 169.95 MEAN .46 MAX 35 MIN 0 AC-FT 337
WTR YR 1973 TOTAL 344.95 MEAN .95 MAX 35 MIN 0 AC-FT 684

11072200 TEMESCAL CREEK AT CORONA, CALIF.

LOCATION.--Lat 33°53'46", long 117°34'50", in La Sierra Grant, Riverside County, on right bank 0.2 mile downstream from Lincoln Avenue, and 1.0 mile northwest of Corona.

DRAINAGE AREA.--249 sq mi, excludes 768 sq mi above Lake Elsinore.

PERIOD OF RECORD.--December 1967 to current year.

GAGE.--Water-stage recorder. Altitude of gage is 550 ft (from topographic map).

AVERAGE DISCHARGE.--5 years, 6.39 cfs (4,630 acre-ft per year).

EXTREMES.--Current year: Maximum discharge, 508 cfs Feb. 11 (gage height, 3.06 ft); no flow many days.
Period of record: Maximum discharge, 8,850 cfs Feb. 25, 1969 (gage height, 8.17 ft, from floodmark), on basis of slope-area measurement of maximum flow; no flow most of each year.
Flood of Mar. 2, 1938, 14,900 cfs, by slope-area measurement at site 3 miles upstream.

REMARKS.--Records poor. Flow regulated by Lake Elsinore and several storage reservoirs. Many diversions for irrigation. Prior to July 22, 1968, effluent from city of Corona disposal plant was released to creek at site 0.5 mile upstream.

DISCHARGE, IN CUBIC FEET PER SECOND, WATER YEAR OCTOBER 1972 TO SEPTEMBER 1973

DAY	OCT	NOV	DEC	JAN	FEB	MAR	APR	MAY	JUN	JUL	AUG	SEP
1	0	1.0	0	0	0	0	0	2.0	1.2	1.6	2.1	1.9
2	0	.50	0	0	0	0	.10	2.2	1.1	1.7	2.0	1.9
3	0	2.0	0	0	2.3	0	.25	2.4	1.1	1.8	1.9	2.0
4	0	1.5	35	0	.30	2.3	.30	2.6	1.0	1.9	1.8	2.0
5	0	.50	0	0	.10	0	.35	2.8	1.0	2.0	1.8	2.1
6	0	0	0	0	49	1.3	.45	2.9	.90	2.1	1.7	2.1
7	0	2.0	7.4	0	4.7	3.2	.50	3.0	.90	2.2	1.7	2.1
8	0	1.0	16	0	0	32	.55	3.1	.90	2.3	1.6	2.1
9	0	1.5	0	3.2	0	.13	.60	3.1	.90	2.4	1.6	2.1
10	0	2.0	0	2.3	0	0	.65	3.2	.85	2.5	1.6	2.0
11	0	13	0	0	155	14	.70	3.2	.85	2.6	1.6	2.0
12	0	.30	0	0	14	9.5	.70	3.2	.85	2.7	1.6	2.0
13	0	.10	0	0	65	2.0	.75	3.1	.85	2.8	1.6	1.9
14	0	65	0	0	0	.50	.75	3.2	.85	2.9	1.6	1.9
15	0	.60	0	0	0	0	.75	3.0	.85	2.9	1.6	1.8
16	0	93	0	60	0	3.6	.80	3.0	.90	2.9	1.6	1.8
17	0	.48	0	8.8	0	1.3	.80	2.9	.90	2.9	1.6	1.7
18	.16	.12	0	40	0	0	.90	2.8	.90	2.9	1.6	1.6
19	3.8	0	0	13	0	0	.90	2.7	.90	2.8	1.6	1.5
20	2.0	0	0	0	0	67	1.0	2.6	.90	2.8	1.6	1.5
21	1.0	0	0	0	0	14	1.0	2.5	.95	2.7	1.6	1.4
22	0	0	0	0	0	14	1.1	2.4	.95	2.7	1.6	1.4
23	0	0	0	0	0	0	1.1	2.3	1.0	2.7	1.6	1.3
24	.50	0	0	0	0	0	1.2	2.2	1.1	2.6	1.6	1.3
25	1.0	0	0	0	0	0	1.2	2.0	1.1	2.6	1.6	1.2
26	1.0	0	0	0	0	0	1.3	1.9	1.2	2.5	1.7	1.2
27	2.5	0	0	0	0	0	1.4	1.8	1.2	2.4	1.7	1.2
28	1.5	0	0	0	8.3	0	1.5	1.6	1.3	2.4	1.7	1.1
29	0	0	0	0	------	0	1.7	1.5	1.4	2.3	1.8	1.1
30	1.0	0	0	0	------	0	1.8	1.4	1.5	2.3	1.8	1.1
31	.50	------	0	0	------	0	------	1.3	------	2.2	1.8	------
TOTAL	14.96	184.60	58.4	127.3	298.70	164.83	25.10	77.9	30.30	76.1	52.3	50.3
MEAN	.48	6.15	1.88	4.11	10.7	5.32	.84	2.51	1.01	2.45	1.69	1.68
MAX	3.8	93	35	60	155	67	1.8	3.2	1.5	2.9	2.1	2.1
MIN	0	0	0	0	0	0	0	1.3	.85	1.6	1.6	1.1
AC-FT	30	366	116	252	592	327	50	155	60	151	104	100

CAL YR 1972 TOTAL 428.35 MEAN 1.17 MAX 93 MIN 0 AC-FT 850
WTR YR 1973 TOTAL 1,160.79 MEAN 3.18 MAX 155 MIN 0 AC-FT 2,300

NOTE.--No gage-height record Apr. 1 to Sept. 30.

11073200 SAN ANTONIO CREEK BELOW SAN ANTONIO DAM, CALIF.

LOCATION.--Lat 34°09'26", long 117°40'50", in NE¼NE¼SE¼ sec.23, T.1 N., R.8 W., Los Angeles-San Bernardino County line, on left wall of outlet channel at toe of San Antonio Dam, and 4.7 miles northeast of Claremont.

DRAINAGE AREA.--26.9 sq mi.

PERIOD OF RECORD.--October 1962 to current year.

GAGE.--Water-stage recorder. Datum of gage is 2,093.94 ft above mean sea level (Corps of Engineers bench mark).

AVERAGE DISCHARGE.--11 years, 10.6 cfs (7,680 acre-ft per year).

EXTREMES.--Current year: Maximum discharge, 438 cfs Feb. 11 (gage height, 2.48 ft); no flow most of year.
Period of record: Maximum discharge, 8,420 cfs Jan. 25, 1969 (gage height, 11.22 ft), from rating curve extended above 400 cfs on basis of gate openings at dam; no flow most of each year.

REMARKS.--Records fair. Flow regulated by San Antonio flood-control reservoir (capacity, 7,620 acre-ft). Water diverted out of basin for power, domestic use, and irrigation. See schematic diagram of Santa Ana River basin.

DISCHARGE, IN CUBIC FEET PER SECOND, WATER YEAR OCTOBER 1972 TO SEPTEMBER 1973

DAY	OCT	NOV	DEC	JAN	FEB	MAR	APR	MAY	JUN	JUL	AUG	SEP
1	.13	.36	0	0	0	.21	0	13	40	.02	3.3	.01
2	.09	.49	0	0	0	.16	0	35	38	.19	0	0
3	.09	.52	0	0	0	.16	0	35	22	.12	0	0
4	.18	.52	.10	0	0	.16	0	35	5.0	0	.03	0
5	.17	.52	.01	0	0	.16	0	36	.94	0	.01	.24
6	.16	.51	0	0	.09	.16	0	38	.94	0	.02	0
7	.16	.52	.10	0	.22	.16	0	38	.94	0	0	0
8	.16	.52	0	0	.07	.16	0	38	.94	0	0	0
9	.16	.52	0	2.6	0	.16	0	36	.94	0	0	0
10	.16	.44	0	.02	.03	.16	71	32	.94	0	0	0
11	.16	.87	0	0	54	.16	97	11	.94	0	.01	0
12	2.3	0	0	0	.16	15	28	.36	.94	0	.05	0
13	4.1	0	0	0	43	33	0	.36	.94	0	.05	0
14	.72	.22	0	0	52	28	0	.42	.94	0	.05	0
15	.72	0	0	0	.16	22	0	29	.89	0	.05	0
16	.72	.12	0	.21	.16	7.2	0	44	.72	0	.05	0
17	.72	.27	0	.15	.16	2.4	0	41	.72	0	.01	0
18	.72	0	0	.11	.16	2.0	49	38	.72	0	0	0
19	.94	0	0	.41	.16	2.1	74	38	17	0	0	0
20	1.2	0	0	.16	28	2.1	46	35	25	0	0	0
21	.72	0	0	.17	12	2.2	0	12	24	0	0	0
22	.36	0	0	.15	.42	51	0	.95	1.7	0	0	0
23	.52	0	0	.12	.16	48	42	.94	.16	0	0	0
24	.52	0	0	.10	.18	.16	74	1.0	.16	0	0	0
25	.36	0	2.0	.09	.17	.21	71	.26	.16	0	0	0
26	.52	0	0	.10	.10	.12	68	.24	.16	0	0	0
27	.52	0	0	.10	.10	.10	38	.24	.16	0	0	0
28	.52	0	0	.13	.14	.10	0	.24	.15	0	0	0
29	.52	0	0	0	------	.05	0	28	.09	0	0	0
30	.24	0	0	0	------	0	0	45	0	0	0	0
31	.36	------	0	0	------	0	------	42	------	0	0	------
TOTAL	18.92	6.40	2.21	4.62	191.64	217.55	658	704.01	186.19	.33	3.63	.25
MEAN	.61	.21	.071	.15	6.84	7.02	21.9	22.7	6.21	.011	.12	.008
MAX	4.1	.87	2.0	2.6	54	51	97	45	40	.19	3.3	.24
MIN	.09	0	0	0	0	0	0	.24	0	0	0	0
AC-FT	38	13	4.4	9.2	380	432	1,310	1,400	369	.7	7.2	.5

CAL YR 1972 TOTAL 99.04 MEAN .27 MAX 39 MIN 0 AC-FT 196
WTR YR 1973 TOTAL 1,993.75 MEAN 5.46 MAX 97 MIN 0 AC-FT 3,950

NOTE.--No gage-height record Apr. 2-30.

11073360 CHINO CREEK AT SCHAEFER AVENUE, NEAR CHINO, CALIF.

LOCATION.--Lat 34°00'14", long 117°43'34", in Santa Ana del Chino Grant, San Bernardino County, on right bank 300 ft downstream from Schaefer Avenue, 0.8 mile downstream from San Antonio Creek, and 1.5 miles southwest of Chino.

DRAINAGE AREA.--48.9 sq mi.

PERIOD OF RECORD.--October 1969 to current year.

GAGE.--Water-stage recorder. Altitude of gage is 685 ft (from topographic map).

EXTREMES.--Current year: Maximum discharge, 2,600 cfs Oct. 20 (gage height, 6.45 ft, from floodmarks), from rating curve extended as explained below; minimum daily, 0.05 cfs Sept. 23.

Period of record: Maximum discharge, 2,600 cfs Oct. 20, 1972 (gage height, 6.45 ft, from floodmarks), from rating curve extended above 620 cfs on basis of computation of flow in concrete-lined channel at 1,600 cfs and a contracted-opening measurement at 9.23 ft; minimum daily, 0.05 cfs Sept. 23, 1973.

Flood of Jan. 25, 1969, 9,200 cfs (gage height, 9.23 ft, present datum), by contracted-opening measurement at site 6.1 miles downstream.

REMARKS.--Records poor. Flow partly regulated by San Antonio flood-control reservoir (capacity, 7,620 acre-ft). Natural streamflow affected by extensive ground-water withdrawals, diversions for power, domestic use, irrigation, and return flow from irrigated areas. See schematic diagram of Santa Ana River basin.

DISCHARGE, IN CUBIC FEET PER SECOND, WATER YEAR OCTOBER 1972 TO SEPTEMBER 1973

DAY	OCT	NOV	DEC	JAN	FEB	MAR	APR	MAY	JUN	JUL	AUG	SEP
1	1.1	1.0	.90	.98	.85	.26	.26	.22	.26	.27	6.7	.32
2	1.1	.88	.94	1.0	.81	.21	.21	.22	.26	.27	6.0	.26
3	1.1	1.0	1.1	1.0	45	.21	.32	.21	.26	.28	3.5	.26
4	1.1	1.1	226	2.4	.76	1.9	.32	.21	.26	.28	.92	.32
5	1.1	1.3	2.2	.99	.68	.40	.32	.20	.26	.29	.62	.26
6	1.1	1.5	1.0	.81	204	6.0	.32	.20	.26	.29	4.6	.40
7	1.1	1.3	70	.72	53	7.4	.32	.20	.26	.30	.40	.40
8	1.1	5.0	17	.93	2.6	5.3	.32	.20	.26	.30	.32	.32
9	1.1	.92	1.4	26	1.4	2.2	.32	.20	.26	.31	.32	.16
10	.92	1.1	1.3	4.0	27	.26	.32	.20	.26	.32	.26	.32
11	.92	72	1.4	.89	373	1.6	.31	.20	.25	.33	.32	.26
12	.92	1.1	.79	.89	46	3.5	.31	.20	.25	.35	.26	.26
13	.92	.95	.75	.88	113	2.2	.31	.20	.25	.36	1.1	.32
14	.92	108	.91	.80	4.0	.76	.31	.20	.25	.37	.40	.21
15	.92	1.6	.70	.85	1.9	.40	.31	.21	.25	.38	.40	.12
16	.92	153	.65	334	.71	.40	.30	.21	.25	.39	.32	.12
17	.92	34	.66	6.2	.64	.32	.30	.22	.25	.40	.32	.12
18	.92	1.8	1.1	181	.63	.26	.30	.22	.25	.40	.26	.09
19	1.1	1.2	1.0	12	.63	.21	.30	.23	.25	.39	1.9	.09
20	50	1.3	.80	.76	.76	2.2	.30	.23	.25	.38	.50	.09
21	1.0	1.3	.81	.58	1.2	3.0	.29	.24	.25	.36	.26	.09
22	.90	1.8	.86	.56	.65	4.0	.29	.24	.25	.34	4.0	.07
23	.80	1.9	.76	.67	.68	1.3	.28	.24	.25	.34	16	.05
24	.76	1.9	.97	.63	.62	.50	.27	.24	.25	.33	17	.09
25	.68	1.2	1.2	6.3	.62	.50	.26	.25	.25	.32	9.5	.07
26	.86	1.3	1.5	1.8	.75	.40	.25	.25	.26	.32	6.0	.07
27	.90	1.4	1.3	.68	8.1	.40	.25	.25	.26	.32	4.0	.07
28	.73	3.2	2.3	.61	67	1.1	.24	.25	.26	.50	4.0	.09
29	.68	2.9	.76	.72	------	.62	.23	.25	.26	.50	.32	.07
30	.67	.94	.79	41	------	.40	.23	.25	.26	2.6	.40	.07
31	.90	------	.93	.90	------	.26	------	.25	------	4.6	.50	------
TOTAL	78.16	407.89	342.78	631.55	956.99	48.47	8.67	6.89	7.65	17.19	91.40	5.44
MEAN	2.52	13.6	11.1	20.4	34.2	1.56	.29	.22	.26	.55	2.95	.18
MAX	50	153	226	334	373	7.4	.32	.25	.26	4.6	17	.40
MIN	.67	.88	.65	.56	.62	.21	.21	.20	.25	.27	.26	.05
AC-FT	155	809	680	1,250	1,900	96	17	14	15	34	181	11

CAL YR 1972 TOTAL 961.67 MEAN 2.63 MAX 226 MIN .26 AC-FT 1,910
WTR YR 1973 TOTAL 2,603.08 MEAN 7.13 MAX 373 MIN .05 AC-FT 5,160

PEAK DISCHARGE (BASE, 600 CFS)

DATE	TIME	G.H.	DISCHARGE	DATE	TIME	G.H.	DISCHARGE
10-20	unknown	6.45	2,600	1-18	1930	6.10	1,960
11-11	0700	5.53	1,050	2-6	1415	5.47	964
11-14	1215	5.54	1,060	2-11	0545	5.58	1,120
12-4	1230	6.05	1,880	2-13	0115	5.53	1,050
1-16	2030	6.31	2,320				

NOTE.--No gage-height record Oct. 20-24, Apr. 4 to July 26.

11073470 CUCAMONGA CREEK NEAR UPLAND, CALIF.

LOCATION.--Lat 34°10'46", long 117°37'41", in NE¼NE¼NE¼ sec.17, T.1 N., R.7 W., San Bernardino County, on left bank 0.1 mile upstream from unnamed tributary, and 5.7 miles north of Upland.

DRAINAGE AREA.--9.68 sq mi.

PERIOD OF RECORD.--October 1927 to current year. Monthly discharge only for October to December 1928, published in WSP 1315-B.

GAGE.--Water-stage recorder. Altitude of gage is 2,600 ft (from topographic map). See WSP 1735 for history of changes prior to Dec. 13, 1938. Dec. 14, 1938, to Mar. 30, 1971, at site 0.6 mile downstream at different datums.

AVERAGE DISCHARGE.--46 years, 8.08 cfs (5,850 acre-ft per year).

EXTREMES.--Current year: Maximum discharge, 1,450 cfs Feb. 11 (gage height, 6.09 ft), from rating curve extended above 80 cfs on basis of field estimate of maximum flow; minimum daily, 1.4 cfs Dec. 26.
Period of record: Maximum discharge, 14,100 cfs Jan. 25, 1969 (gage height, 14.44 ft, site and datum then in use), from rating curve extended above 450 cfs on basis of slope-area measurements at gage heights 6.22 and 12.44 ft; minimum daily, 0.30 cfs Oct. 5, 6, 1962.

REMARKS.--Records good except those for periods of no gage-height record, which are poor. No regulation or diversion above station. See schematic diagram of Santa Ana River basin.

DISCHARGE, IN CUBIC FEET PER SECOND, WATER YEAR OCTOBER 1972 TO SEPTEMBER 1973

DAY	OCT	NOV	DEC	JAN	FEB	MAR	APR	MAY	JUN	JUL	AUG	SEP
1	1.7	2.1	1.8	1.7	3.5	16	21	13	8.0	7.1	5.9	5.9
2	1.9	2.1	1.8	1.7	3.5	16	19	14	7.8	7.1	5.8	5.9
3	1.9	2.0	1.8	1.8	4.3	16	18	13	7.8	7.1	5.9	5.9
4	1.9	2.2	4.2	1.9	3.7	15	18	12	7.8	7.1	5.8	5.9
5	1.8	2.2	3.0	1.8	3.5	30	17	12	7.6	7.1	6.2	5.5
6	1.8	2.1	2.6	1.8	11	36	17	12	7.6	7.1	5.9	5.5
7	1.9	2.1	3.1	1.8	22	41	17	12	7.6	6.7	5.9	5.5
8	2.0	2.2	2.7	1.9	20	26	16	12	7.6	6.7	5.9	5.5
9	2.0	2.2	2.4	2.5	17	21	16	12	7.4	6.6	5.8	5.5
10	2.1	2.0	2.2	2.2	52	52	16	11	7.4	6.5	5.8	5.5
11	2.0	4.1	2.1	2.2	740	38	16	9.5	7.3	6.4	5.7	5.5
12	2.0	2.8	2.1	2.2	235	31	15	9.5	7.3	6.3	5.7	5.1
13	2.0	2.5	2.0	2.0	50	28	15	9.5	7.3	6.7	5.7	5.1
14	1.9	4.3	1.9	1.9	40	26	15	9.5	7.5	6.9	5.5	5.1
15	2.0	3.2	1.8	2.0	31	24	15	9.5	7.7	6.7	5.5	5.1
16	2.0	5.3	1.7	8.0	25	23	14	9.5	7.8	6.7	5.4	5.1
17	1.9	4.3	1.7	4.2	21	22	14	9.7	7.5	6.6	5.4	5.1
18	1.9	3.3	1.7	4.5	19	23	14	10	7.3	6.8	5.4	5.1
19	2.3	3.1	1.7	6.4	17	53	14	11	7.5	6.7	8.0	4.8
20	2.3	2.8	1.6	4.9	18	41	14	11	7.6	7.0	5.9	4.8
21	2.2	2.6	1.6	5.5	19	33	13	11	7.5	7.1	5.9	4.8
22	2.1	2.3	1.6	3.0	20	31	13	11	7.5	7.0	6.3	4.8
23	2.0	2.2	1.7	3.1	22	31	13	10	7.3	6.6	6.3	4.8
24	1.9	2.2	1.6	3.0	19	31	13	9.5	7.4	6.3	6.3	4.8
25	1.9	2.1	1.5	3.5	18	31	13	9.5	7.6	6.2	6.3	4.8
26	2.0	2.1	1.4	3.3	19	32	13	9.4	7.3	6.2	6.3	4.5
27	2.1	1.9	1.5	3.5	28	33	13	9.0	7.1	6.2	6.3	4.5
28	2.0	1.9	1.7	3.5	22	30	12	8.7	7.1	5.9	6.3	4.5
29	2.1	1.9	1.7	3.5	------	27	12	8.5	7.1	5.9	5.9	4.5
30	2.0	1.8	1.7	3.5	------	25	15	8.4	6.9	5.9	5.9	4.5
31	2.0	------	1.7	4.0	------	23	------	8.3	------	5.9	5.9	------
TOTAL	61.6	77.9	61.6	96.8	1,503.5	905	451	325.0	224.2	205.1	184.8	153.9
MEAN	1.99	2.60	1.99	3.12	53.7	29.2	15.0	10.5	7.47	6.62	5.96	5.13
MAX	2.3	5.3	4.2	8.0	740	53	21	14	8.0	7.1	8.0	5.9
MIN	1.7	1.8	1.4	1.7	3.5	15	12	8.3	6.9	5.9	5.4	4.5
AC-FT	122	155	122	192	2,980	1,800	895	645	445	407	367	305

CAL YR 1972 TOTAL 936.0 MEAN 2.56 MAX 11 MIN 1.4 AC-FT 1,860
WTR YR 1973 TOTAL 4,250.4 MEAN 11.6 MAX 740 MIN 1.4 AC-FT 8,430

PEAK DISCHARGE (BASE, 80 CFS).--Feb. 11 (0830) 1,450 cfs (6.09 ft).

NOTE.--No gage-height record Jan. 15 to Feb. 7, Feb. 13 to May 9.

11073495 CUCAMONGA CREEK NEAR MIRA LOMA, CALIF.

LOCATION.--Lat 33°58'58", long 117°35'55", in SW¼SW¼NE¼ sec.22, T.2 S., R.7 W., San Bernardino County, on left levee 200 ft upstream from Merrill Avenue, and 4.6 miles west of Mira Loma.

DRAINAGE AREA.--75.8 sq mi.

PERIOD OF RECORD.--January 1968 to current year.

GAGE.--Water-stage recorder. Datum of gage is 655.3 ft above mean sea level.

AVERAGE DISCHARGE.--5 years (1969-73), 4.14 cfs (3,000 acre-ft per year).

EXTREMES.--Current year: Maximum discharge, 1,230 cfs Feb. 11 (gage height, 2.72 ft); no flow most of year. Period of record: Maximum discharge, 9,100 cfs Jan. 25, 1969 (gage height, 7.08 ft, from floodmark), on basis of slope-area measurement of maximum flow; no flow most of each year.

REMARKS.--Records fair. Flood flows not materially affected by percolation basins in headwater areas. Extensive ground-water withdrawals for municipal supply and irrigation. See schematic diagram of Santa Ana River basin.

DISCHARGE, IN CUBIC FEET PER SECOND, WATER YEAR OCTOBER 1972 TO SEPTEMBER 1973

DAY	OCT	NOV	DEC	JAN	FEB	MAR	APR	MAY	JUN	JUL	AUG	SEP
1		0	0	0	0	.43						
2		0	0	0	0	.33						
3		0	0	0	0	.07						
4		0	13	0	0	0						
5		0	0	0	.30	0						
6		0	0	0	51	3.9						
7		0	0	0	.80	.97						
8		0	0	0	.42	10						
9		0	0	0	.56	0						
10		0	0	0	4.8	0						
11		0	0	0	296	11						
12		0	0	0	14	0						
13		0	0	0	28	0						
14		.38	0	0	0	0						
15		0	0	0	0	0						
16		.86	0	24	0	0						
17		0	0	1.6	0	0						
18		0	0	48	0	0						
19		0	0	3.0	0	0						
20		0	0	0	0	27						
21		0	0	0	0	12						
22		0	0	0	0	4.1						
23		0	0	0	0	0						
24		0	0	0	0	0						
25		0	0	0	0	0						
26		0	0	0	0	0						
27		0	0	0	4.8	0						
28		0	0	0	14	0						
29		0	0	0	------	0						
30		0	0	0	------	0						
31		------	0	0	------	0	------		------			------
TOTAL	0	1.24	13	76.6	414.68	69.80	0	0	0	0	0	0
MEAN	0	.041	.42	2.47	14.8	2.25	0	0	0	0	0	0
MAX	0	.86	13	48	296	27	0	0	0	0	0	0
MIN	0	0	0	0	0	0	0	0	0	0	0	0
AC-FT	0	2.5	26	152	823	138	0	0	0	0	0	0

CAL YR 1972 TOTAL 14.70 MEAN .04 MAX 13 MIN 0 AC-FT 29
WTR YR 1973 TOTAL 575.32 MEAN 1.58 MAX 296 MIN 0 AC-FT 1,140

PEAK DISCHARGE (BASE, 300 CFS)

DATE	TIME	G.H.	DISCHARGE	DATE	TIME	G.H.	DISCHARGE
12-4	1300	2.00	460	2-6	1500	1.90	370
1-16	2200	1.85	335	2-11	0630	2.72	1,230
1-18	2000	2.17	613	2-27	2345	2.00	460

11074000 SANTA ANA RIVER BELOW PRADO DAM, CALIF.

LOCATION.--Lat 33°53'00", long 117°38'40", in La Sierra Grant, Riverside County, on left bank of outlet channel, 2,500 ft downstream from axis of Prado Dam, and 4.5 miles west of Corona.

DRAINAGE AREA.--1,490 sq mi, excludes 768 sq mi above Lake Elsinore.

PERIOD OF RECORD.--May 1930 to November 1939 (irrigation seasons only), March 1940 to current year. Published as "at Santa Fe Railroad Bridge, near Prado" May 1930 to November 1931, as "at Atchison, Topeka, and Santa Fe Railroad bridge, near Prado" May 1932 to November 1939, and as "below Prado Dam, near Prado" March 1940 to September 1950.

GAGE.--Water-stage recorder and concrete control since August 1944. Datum of gage is approximately 449 ft above mean sea level (Corps of Engineers Survey). Prior to Mar. 18, 1940, at about same site at various datums.

EXTREMES.--Current year: Maximum discharge, 575 cfs Mar. 26 (gage height, 3.81 ft); minimum daily, 3.0 cfs Sept. 24-30.
Period of record: Maximum discharge, 5,800 cfs Jan. 26, 1969 (gage height, 5.75 ft); minimum daily, 3.0 cfs Sept. 24-30, 1973.
Flood of Mar. 2, 1938, 100,000 cfs, by slope-area measurement at site 2.5 miles downstream.

REMARKS.--Records good. Flow regulated since 1941 by Prado Reservoir (capacity, 201,200 acre-ft) and Big Bear Lake (see sta 11049000). Natural streamflow affected by extensive ground-water withdrawals, diversion for irrigation, and return flow from irrigated areas. California Water Project released 11,270 acre-ft to basin (see sta 11066460). See schematic diagram of Santa Ana River basin. Records of chemical analyses for the current year are published in Part 2 of this report.

COOPERATION.--Four discharge measurements furnished by Orange County Flood Control District.

DISCHARGE, IN CUBIC FEET PER SECOND, WATER YEAR OCTOBER 1972 TO SEPTEMBER 1973

DAY	OCT	NOV	DEC	JAN	FEB	MAR	APR	MAY	JUN	JUL	AUG	SEP
1	30	45	82	66	170	185	153	160	88	49	37	43
2	38	57	63	65	102	185	153	163	88	46	42	45
3	34	58	66	69	106	185	148	163	84	42	46	43
4	34	58	100	69	155	183	143	163	79	39	48	48
5	31	58	194	63	106	165	143	160	77	40	48	51
6	28	55	206	77	191	148	143	160	77	43	46	48
7	29	65	218	79	215	165	143	158	69	46	46	46
8	33	68	242	81	175	165	143	163	61	43	45	48
9	37	71	239	96	173	165	155	163	58	42	42	46
10	42	69	230	110	170	163	160	160	61	46	43	42
11	40	102	212	100	178	165	163	158	57	49	48	49
12	40	140	113	92	203	163	163	158	55	49	42	49
13	40	58	77	88	209	163	163	155	63	54	39	51
14	40	82	77	84	215	160	163	153	65	51	42	52
15	42	125	75	84	209	160	163	158	61	51	43	58
16	45	135	75	96	209	160	160	155	60	48	40	49
17	51	209	81	155	209	158	160	153	60	49	39	33
18	51	273	81	203	203	158	160	150	60	51	38	4.4
19	55	266	79	256	200	158	160	148	58	52	39	4.0
20	81	256	79	280	197	158	158	145	51	52	38	4.0
21	69	191	77	273	194	158	158	143	45	60	39	3.6
22	60	123	77	266	191	160	158	148	43	58	38	3.2
23	57	120	75	227	191	160	155	145	43	49	37	3.2
24	58	110	75	203	191	155	155	130	45	46	37	3.0
25	55	90	68	200	191	155	168	92	43	45	43	3.0
26	54	73	66	197	188	430	170	90	43	43	42	3.0
27	58	66	71	194	185	560	170	88	45	42	39	3.0
28	61	63	68	188	185	550	168	77	48	42	39	3.0
29	55	60	66	185	------	535	165	69	48	42	40	3.0
30	55	63	69	178	------	422	163	65	48	38	38	3.0
31	57	------	69	175	------	155	------	69	------	37	40	------
TOTAL	1,460	3,209	3,370	4,499	5,111	6,752	4,727	4,262	1,783	1,444	1,283	844.4
MEAN	47.1	107	109	145	183	218	158	137	59.4	46.6	41.4	28.1
MAX	81	273	242	280	215	560	170	163	88	60	48	58
MIN	28	45	63	63	102	148	143	65	43	37	37	3.0
AC-FT	2,900	6,370	6,680	8,920	10,140	13,390	9,380	8,450	3,540	2,860	2,540	1,670

CAL YR 1972 TOTAL 27,102.0 MEAN 74.0 MAX 496 MIN 18 AC-FT 53,760
WTR YR 1973 TOTAL 38,744.4 MEAN 106 MAX 560 MIN 3.0 AC-FT 76,850

11075720 CARBON CREEK BELOW CARBON CANYON DAM, CALIF.

LOCATION.--Lat 33°54'40", long 117°50'29", in SW¼NE¼ sec.17, T.3 S., R.9 W., Orange County, on right wall of outlet channel 250 ft downstream from toe of Carbon Canyon Dam, and 2.4 miles northwest of Yorba Linda.

DRAINAGE AREA.--19.5 sq mi.

PERIOD OF RECORD.--October 1961 to current year.

GAGE.--Water-stage recorder. Datum of gage is 396.29 ft above mean sea level (Corps of Engineers bench mark). Prior to Dec. 3, 1971, at datum 2.00 ft higher.

AVERAGE DISCHARGE.--12 years, 0.56 cfs (406 acre-ft per year).

EXTREMES.--Current year: Maximum discharge, 64 cfs Feb. 13 (gage height, 2.77 ft); no flow most of year. Period of record: Maximum discharge, 446 cfs Feb. 25, 1969 (gage height, 4.64 ft, present datum), from rating curve extended above 110 cfs on basis of computation of flow in concrete-lined channel at gage height 6.18 ft; no flow most of each year.

REMARKS.--Records good. Flow regulated by Carbon Canyon flood-control reservoir (capacity, 6,610 acre-ft). No diversion above station. See schematic diagram of Santa Ana River basin.

DISCHARGE, IN CUBIC FEET PER SECOND, WATER YEAR OCTOBER 1972 TO SEPTEMBER 1973

DAY	OCT	NOV	DEC	JAN	FEB	MAR	APR	MAY	JUN	JUL	AUG	SEP
1		0	0	0	.71	.05	0					0
2		0	0	0	0	.03	0					0
3		0	0	0	0	.03	0					0
4		0	.08	0	0	.02	0					0
5		0	.15	0	0	.01	0					0
6		0	.10	0	1.6	0	0					0
7		0	.09	0	1.2	0	0					0
8		0	.09	0	5.4	0	0					0
9		0	.09	0	.02	0	0					0
10		0	.09	0	0	0	1.3					0
11		0	.09	0	.39	.01	0					0
12		0	.05	0	.03	0	0					0
13		0	.05	0	14	0	0					0
14		.01	.05	0	23	0	0					0
15		1.9	.04	0	4.1	0	0					0
16		.01	.02	.03	0	0	0					0
17		4.1	.01	.05	0	0	0					0
18		0	0	.04	0	0	0					0
19		0	0	.01	0	0	0					0
20		0	0	.01	0	0	0					0
21		0	0	.01	0	0	0					0
22		0	0	.01	0	0	0					0
23		0	0	.01	0	0	0					0
24		0	0	.01	0	0	0					0
25		0	0	0	0	0	0					0
26		0	0	0	0	0	0					0
27		0	0	0	0	0	0					.02
28		0	0	0	.03	0	0					0
29		0	0	0	------	0	0					0
30		0	0	0	------	0	0					0
31		------	0	0	------	0	------		------			------
TOTAL	0	6.02	1.00	.18	50.48	.15	1.3	0	0	0	0	.02
MEAN	0	.20	.032	.006	1.80	.005	.043	0	0	0	0	.0007
MAX	0	4.1	.15	.05	23	.05	1.3	0	0	0	0	.02
MIN	0	0	0	0	0	0	0	0	0	0	0	0
AC-FT	0	12	2.0	.4	100	.3	2.6	0	0	0	0	.04

CAL YR 1972 TOTAL 7.02 MEAN .019 MAX 4.1 MIN 0 AC-FT 14
WTR YR 1973 TOTAL 59.15 MEAN .16 MAX 23 MIN 0 AC-FT 117

11075800 SANTIAGO CREEK AT MODJESKA, CALIF.

LOCATION.--Lat 33°42'32", long 117°38'05", in SE¼SE¼NW¼ sec.29, T.5 S., R.7 W., Orange County, on right bank at Santiago Canyon road bridge, 0.3 mile west of Modjeska, and 0.4 mile downstream from Harding Creek.
DRAINAGE AREA.--12.5 sq mi.
PERIOD OF RECORD.--October 1961 to current year.
GAGE.--Water-stage recorder and crest-stage gage. Datum of gage is 1,254.35 ft above mean sea level. Prior to Sept. 10, 1969, at datum 4.42 ft higher.
AVERAGE DISCHARGE.--12 years, 7.28 cfs (5,270 acre-ft per year). 9 years, 8.70 cfs (6,300 acre-ft per year); figure published in Water Resources Data for California, 1969, in error.
EXTREMES.--Current year: Maximum discharge, 516 cfs Feb. 11 (gage height, 5.99 ft); no flow Oct. 1 to Nov. 10.
Period of record: Maximum discharge, 6,520 cfs Feb. 25, 1969 (gage height, 10.50 ft, present datum), from rating curve extended above 840 cfs on basis of slope-area measurement of maximum flow; no flow for several months in each year.
REMARKS.--Records poor. Slight regulation by Modjeska Reservoir on Harding Creek. No diversion above station. See schematic diagram of Santa Ana River basin.
COOPERATION.--Three discharge measurements furnished by Orange County Flood Control District.
REVISIONS.--Revised figures of discharge, in cubic feet per second, for high-water periods in the 1969 water year, superseding figures published in WRD Calif. 1969, are given herewith:

Jan. 21, 1969...	397
25.....	1,620
26.....	610

Month	Cfs-days	Mean	Max	Min	Ac-ft
January 1969	4,011.80	129	1,620	0	7,960
WTR YR 1969	17,217.07	47.2	3,590	0	34,150

DISCHARGE, IN CUBIC FEET PER SECOND, WATER YEAR OCTOBER 1972 TO SEPTEMBER 1973

DAY	OCT	NOV	DEC	JAN	FEB	MAR	APR	MAY	JUN	JUL	AUG	SEP
1		0	.71	.46	2.2	18	14	5.4	2.6	.95	.23	.07
2		0	.71	.38	2.1	14	14	5.1	2.6	.85	.23	.07
3		0	.71	.38	2.2	12	14	4.8	2.5	.85	.21	.07
4		0	5.7	.38	2.2	11	12	4.4	2.5	.80	.21	.08
5		0	3.6	.42	2.0	10	12	4.3	2.4	.70	.21	.08
6		0	2.0	.42	3.6	16	12	4.3	2.4	.80	.19	.08
7		0	2.6	.51	5.2	30	12	4.0	2.4	.58	.21	.07
8		0	2.8	.61	6.6	39	12	4.0	2.3	.45	.19	.07
9		0	3.1	.71	5.4	44	11	4.0	2.2	.42	.17	.07
10		0	2.8	.46	6.3	41	11	4.0	2.1	.50	.15	.07
11		.09	3.0	.51	215	54	9.1	4.2	2.1	.51	.15	.07
12		.03	2.8	.46	151	70	8.8	4.5	2.1	.55	.14	.07
13		.07	3.0	.42	132	64	8.4	4.1	2.2	.58	.13	.07
14		.89	2.8	.42	70	57	8.6	3.9	2.2	.58	.12	.07
15		.38	2.8	.42	46	48	8.1	3.9	2.2	.51	.11	.06
16		3.0	2.7	5.5	36	43	7.9	3.7	2.0	.45	.11	.07
17		1.3	2.7	12	27	39	7.7	3.9	1.9	.42	.10	.07
18		.83	2.1	9.9	24	36	7.5	4.0	1.9	.42	.10	.08
19		.61	2.0	30	20	40	7.1	3.6	1.8	.42	.09	.09
20		.46	1.9	9.6	18	30	6.9	3.7	1.5	.39	.09	.09
21		.42	1.9	6.5	15	28	6.5	3.3	1.5	.33	.08	.08
22		.46	1.8	5.0	14	34	6.5	3.0	1.3	.36	.08	.08
23		.61	1.7	4.9	13	29	6.3	3.0	1.3	.33	.08	.08
24		.66	1.7	4.4	12	26	6.1	2.9	1.3	.33	.08	.08
25		.66	1.6	4.0	12	24	6.1	2.9	1.2	.33	.09	.07
26		.71	1.6	3.7	12	24	6.3	2.9	1.2	.31	.09	.05
27		.66	1.4	3.4	11	22	5.8	2.7	1.0	.31	.09	.05
28		.77	1.1	3.1	23	21	5.6	2.7	1.0	.31	.09	.04
29		.77	.83	2.8	------	19	5.6	2.7	.95	.29	.09	.03
30		.77	.71	2.5	------	18	5.6	2.6	.90	.25	.08	.03
31		------	.56	2.4	------	16	------	2.6	------	.23	.07	------
TOTAL	0	14.15	65.43	116.66	888.8	977	264.5	115.1	55.55	15.11	4.06	2.06
MEAN	0	.47	2.11	3.76	31.7	31.5	8.82	3.71	1.85	.49	.13	.069
MAX	0	3.0	5.7	30	215	70	14	5.4	2.6	.95	.23	.09
MIN	0	0	.56	.38	2.0	10	5.6	2.6	.90	.23	.07	.03
AC-FT	0	28	130	231	1,760	1,940	525	228	110	30	8.1	4.1

CAL YR 1972 TOTAL 187.66 MEAN .51 MAX 5.9 MIN 0 AC-FT 372
WTR YR 1973 TOTAL 2,518.42 MEAN 6.90 MAX 215 MIN 0 AC-FT 5,000

PEAK DISCHARGE (BASE, 100 CFS).--Feb. 11 (0700) 516 cfs (5.99 ft).

11077500 SANTIAGO CREEK AT SANTA ANA, CALIF.

LOCATION.--Lat 33°46'13", long 117°53'02", in NW¼SW¼NW¼ sec.1, T.5 S., R.10 W., Orange County, on downstream side of Bristol Street bridge at Santa Ana, and 1,600 ft upstream from mouth.

DRAINAGE AREA.--95.1 sq mi.

PERIOD OF RECORD.--October 1928 to current year. Monthly discharge only October to December 1928, published in WSP 1315-B.

GAGE.--Water-stage recorder and crest-stage gage. Datum of gage is 102.34 ft above mean sea level (Orange County Flood Control District bench mark). Prior to Sept. 8. 1969, at site 0.1 mile upstream at different datums.

AVERAGE DISCHARGE.--45 years, 5.20 cfs (3,770 acre-ft per year).

EXTREMES.--Current year: Maximum discharge, 1,390 cfs Nov. 14 (gage height, 5.77 ft); no flow most of year. Period of record: Maximum discharge, 6,600 cfs Feb. 25, 1969 (gage height, 9.10 ft, site and datum then in use); maximum gage height, 9.85 ft Jan. 16, 1952; no flow most of each year.

REMARKS.--Records poor. Flow regulated by Santiago Reservoir (capacity, 25,000 acre-ft), since January 1963 by Villa Park flood-control reservoir (capacity, 15,500 acre-ft), and affected by intervening gravel pits. Diversions above station by Irvine Co. and Serrano and Carpenter Irrigation Districts. See schematic diagram of Santa Ana River basin.

DISCHARGE, IN CUBIC FEET PER SECOND, WATER YEAR OCTOBER 1972 TO SEPTEMBER 1973

DAY	OCT	NOV	DEC	JAN	FEB	MAR	APR	MAY	JUN	JUL	AUG	SEP
1	0	0	0	0	0	0						
2	0	0	0	0	0	0						
3	0	0	0	0	6.1	0						
4	0	0	46	0	.41	0						
5	0	0	0	0	.10	0						
6	0	0	.33	0	31	1.1						
7	0	0	6.8	0	1.8	.52						
8	0	0	14	0	0	10						
9	0	0	0	2.5	0	0						
10	0	.73	0	.37	0	0						
11	0	7.0	0	0	46	3.1						
12	0	0	0	0	11	.07						
13	0	0	0	0	12	0						
14	0	119	0	0	0	0						
15	0	0	0	0	0	0						
16	0	68	0	113	0	0						
17	0	7.3	0	3.8	0	0						
18	1.2	0	0	33	0	0						
19	.98	0	0	4.3	0	0						
20	0	0	0	0	0	43						
21	0	0	0	0	0	33						
22	0	0	0	0	0	1.9						
23	0	0	0	0	0	0						
24	0	0	0	0	0	0						
25	0	0	0	0	0	0						
26	0	0	0	0	0	0						
27	0	0	0	0	1.9	0						
28	0	0	0	0	4.0	0						
29	0	0	0	0	------	0						
30	0	0	0	17	------	0						
31	0	------	0	0	------	0	------		------			------
TOTAL	2.18	202.03	67.13	173.97	114.31	92.69	0	0	0	0	0	0
MEAN	.070	6.73	2.17	5.61	4.08	2.99	0	0	0	0	0	0
MAX	1.2	119	46	113	46	43	0	0	0	0	0	0
MIN	0	0	0	0	0	0	0	0	0	0	0	0
AC-FT	4.3	401	133	345	227	184	0	0	0	0	0	0

CAL YR 1972 TOTAL 280.55 MEAN .77 MAX 119 MIN 0 AC-FT 556
WTR YR 1973 TOTAL 652.31 MEAN 1.79 MAX 119 MIN 0 AC-FT 1,290

11078000 SANTA ANA RIVER AT SANTA ANA, CALIF.

LOCATION.--Lat 33°44'56", long 117°54'30", in NW¼SW¼SE¼ sec.10, T.5 S., R.10 W., Orange County, on pier of Fifth Street Bridge in Santa Ana, 1.8 miles downstream from Santiago Creek.

DRAINAGE AREA.--1,689 sq mi, excludes 768 sq mi above Lake Elsinore.

PERIOD OF RECORD.--January 1923 to current year.

GAGE.--Water-stage recorder. Datum of gage is 71.20 ft above mean sea level (Orange County bench mark). Jan. 3, 1923, to Jan. 24, 1929, at same site at different datum. Jan. 25, 1929, to June 20, 1948, at site 450 ft upstream at different datum. June 21, 1948, to May 2, 1960, at same site at different datum. Feb. 28, 1961, to Oct. 1, 1961, at same site at datum 2.00 ft higher.

AVERAGE DISCHARGE.--17 years (1923-40), 23.4 cfs (16,940 acre-ft per year); 33 years (1940-73), 29.4 cfs (21,300 acre-ft per year).

EXTREMES.--Current year: Maximum discharge, 2,650 cfs Feb. 11 (gage height, 4.46 ft); no flow most of year. Period of record: Maximum discharge (excludes flow which bypassed gage from break in levee below Imperial Highway), 46,300 cfs Mar. 3, 1938 (gage height, 10.20 ft, site and datum then in use), on basis of slope-area measurement of maximum flow; no flow for several months in each year.

REMARKS.--Records fair. Natural flow affected by ground-water withdrawals, diversions, importation by Metropolitan Water District, municipal use, return flow from irrigation, Prado flood-control reservoir (capacity, 201,200 acre-ft) since 1940, three small flood-control reservoirs (combined capacity, 31,900 acre-ft), Big Bear Lake (see sta 11049000), and Santiago Reservoir (capacity, 25,000 acre-ft). Discharge up to 100 cfs can be diverted from Carbon Creek to Coyote Creek, 1.5 miles upstream from mouth of Carbon Creek. See schematic diagram of Santa Ana River basin. Records of suspended-sediment discharge for the current year are published in Part 2 of this report.

DISCHARGE, IN CUBIC FEET PER SECOND, WATER YEAR OCTOBER 1972 TO SEPTEMBER 1973

DAY	OCT	NOV	DEC	JAN	FEB	MAR	APR	MAY	JUN	JUL	AUG	SEP
1	0	0	0	0	0	72	32					
2	0	0	0	0	0	58	16					
3	0	0	0	0	22	76	10					
4	0	0	106	0	4.1	76	1.3					
5	0	0	0	0	1.3	55	10					
6	0	0	0	0	135	70	.48					
7	0	0	7.4	0	60	34	0					
8	0	0	30	0	32	134	0					
9	0	0	0	14	4.0	148	0					
10	0	0	0	4.9	4.2	79	0					
11	0	3.5	0	0	580	119	0					
12	0	0	0	0	314	119	0					
13	0	0	0	0	256	36	0					
14	0	118	0	0	46	26	0					
15	0	0	0	0	9.5	26	0					
16	0	201	0	236	2.1	29	5.5					
17	0	41	0	15	4.3	27	52					
18	0	0	0	123	5.0	25	.43					
19	1.5	0	0	19	7.3	22	0					
20	0	0	0	0	22	299	0					
21	0	0	0	17	28	135	0					
22	0	0	0	.62	22	181	0					
23	0	0	0	0	17	76	.03					
24	0	0	0	0	6.4	145	1.4					
25	0	0	0	0	0	50	38					
26	0	0	0	0	5.2	16	2.9					
27	0	0	0	0	8.1	330	.02					
28	0	0	0	0	146	400	17					
29	0	0	0	0	------	440	.18					
30	0	0	0	15	------	433	.01					
31	0	------	0	0	------	193	------		------			------
TOTAL	1.5	363.5	143.4	444.52	1,741.5	3,929	187.25	0	0	0	0	0
MEAN	.048	12.1	4.63	14.3	62.2	127	6.24	0	0	0	0	0
MAX	1.5	201	106	236	580	440	52	0	0	0	0	0
MIN	0	0	0	0	0	16	0	0	0	0	0	0
AC-FT	3.0	721	284	882	3,450	7,790	371	0	0	0	0	0

CAL YR 1972 TOTAL 1,756.51 MEAN 4.81 MAX 262 MIN 0 AC-FT 3,480
WTR YR 1973 TOTAL 6,810.67 MEAN 18.7 MAX 580 MIN 0 AC-FT 13,510

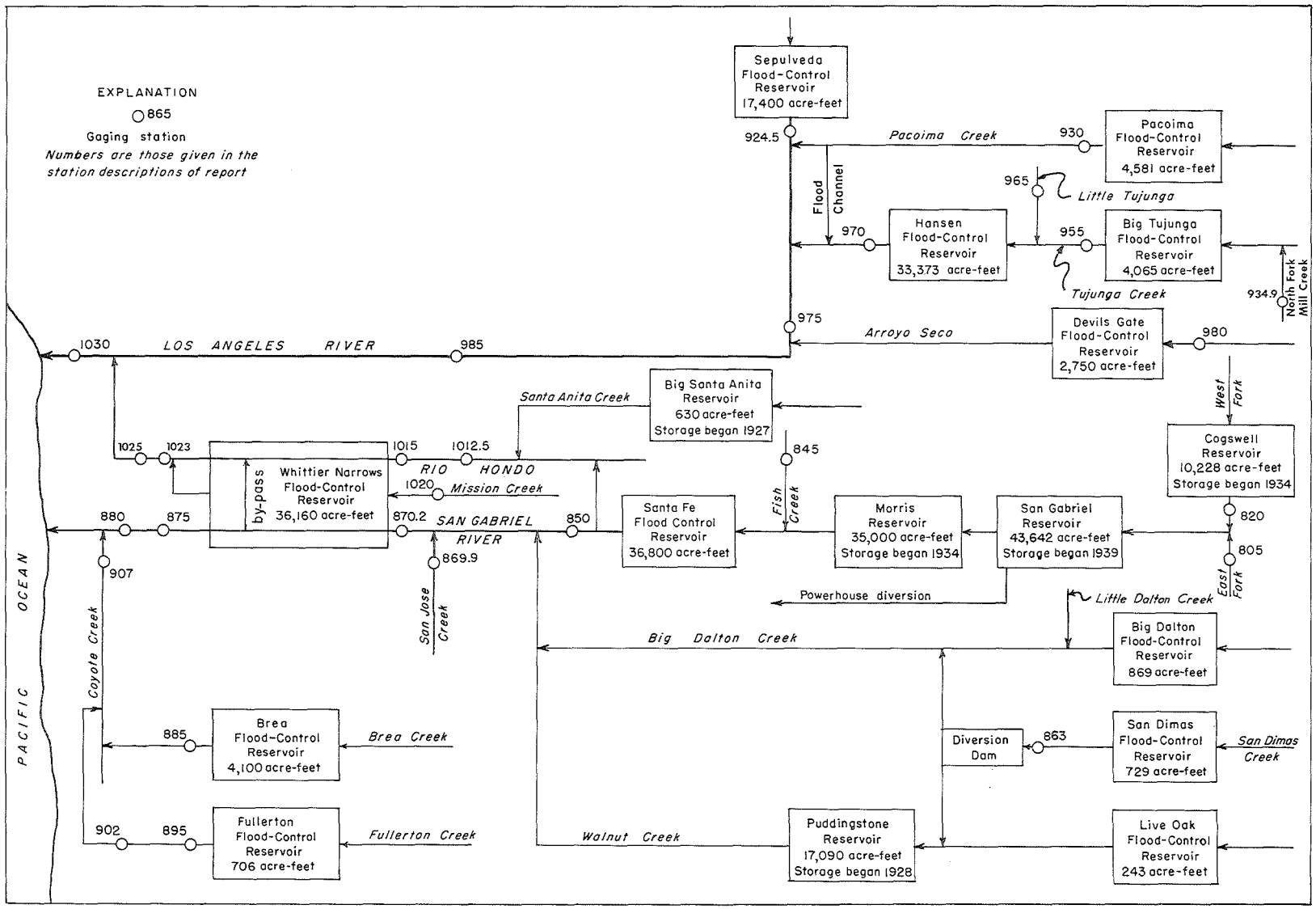

Figure 4.--Schematic diagram showing diversions and storage in San Gabriel and Los Angeles River basins.

11080500 EAST FORK SAN GABRIEL RIVER NEAR CAMP BONITA, CALIF.

LOCATION.--Lat 34°14'09", long 117°48'18", in NE¼NE¼ sec.27, T.2 N., R.9 W., Los Angeles County, on right bank 1,600 ft upstream from mouth of Graveyard Canyon, 2.5 miles upstream from confluence with West Fork, and 2.5 miles west of Camp Bonita.

DRAINAGE AREA.--84.6 sq mi.

PERIOD OF RECORD.--December 1932 to current year. Prior to 1940, published as San Gabriel River near Camp Bonita.

GAGE.--Water-stage recorder. Datum of gage is 1,567.04 ft above mean sea level (levels by Los Angeles County Flood Control District). Prior to Dec. 10, 1938, at site 0.6 mile downstream at different datum.

AVERAGE DISCHARGE.--40 years (1933-73), 70.2 cfs (50,860 acre-ft per year).

EXTREMES.--Current year: Maximum discharge, 3,790 cfs Feb. 11 (gage height, 11.95 ft); minimum daily, 8.2 cfs Oct. 1-6.
Period of record: Maximum discharge, 46,000 cfs Mar. 2, 1938, from rating curve extended above 21,300 cfs (computed by Geological Survey); minimum, 1.5 cfs Oct. 1, 1934.

REMARKS.--No regulation or diversion above station. See schematic diagram of San Gabriel and Los Angeles River basins.

COOPERATION.--Records furnished by Los Angeles County Flood Control District and reviewed by Geological Survey.

DISCHARGE, IN CUBIC FEET PER SECOND, WATER YEAR OCTOBER 1972 TO SEPTEMBER 1973

DAY	OCT	NOV	DEC	JAN	FEB	MAR	APR	MAY	JUN	JUL	AUG	SEP
1	8.2	8.8	9.9	12	21	250	153	169	93	54	38	23
2	8.2	8.8	9.3	12	20	185	154	165	92	53	38	23
3	8.2	8.8	9.3	13	28	175	155	167	90	52	38	23
4	8.2	8.8	26	14	39	165	155	167	88	52	37	22
5	8.2	8.8	24	13	53	157	156	174	87	51	37	22
6	8.2	8.8	20	12	99	302	156	162	86	50	37	22
7	8.3	8.8	23	12	132	204	157	160	84	49	37	22
8	8.5	8.8	20	12	95	210	157	165	82	48	37	22
9	8.6	8.8	17	14	87	240	158	169	80	47	37	22
10	8.7	8.8	15	12	106	260	159	177	78	46	35	22
11	8.8	16	15	12	1,830	270	160	177	76	45	33	22
12	8.8	14	15	12	506	275	186	174	74	44	32	22
13	8.8	12	14	12	338	255	179	169	72	44	31	22
14	8.8	23	14	11	262	239	165	167	70	44	30	22
15	8.8	20	14	11	210	182	157	160	70	43	29	21
16	8.8	27	13	24	168	184	151	153	69	43	28	21
17	8.8	25	13	40	161	180	157	147	68	42	28	20
18	8.8	20	13	64	154	172	165	145	67	42	28	20
19	9.5	16	14	81	148	167	157	147	66	42	28	20
20	9.3	14	14	48	142	246	151	141	65	41	27	19
21	9.1	12	14	42	135	201	147	137	64	41	27	19
22	8.9	11	14	39	128	221	149	130	63	40	27	19
23	8.9	11	14	36	121	236	157	125	62	40	26	19
24	8.9	9.3	13	32	115	252	169	121	61	40	26	18
25	8.9	10	14	30	108	233	182	117	60	39	26	18
26	8.9	9.9	13	26	102	227	192	113	59	39	25	18
27	8.9	9.9	13	25	110	207	204	110	58	39	25	18
28	8.9	9.9	13	23	360	194	204	109	57	38	25	18
29	8.9	9.9	13	23	------	179	196	105	56	38	24	19
30	8.9	9.9	13	23	------	167	172	101	55	38	24	19
31	8.9	------	12	22	------	155	------	97	------	38	24	------
TOTAL	270.6	377.8	458.5	762	5,778	6,590	4,960	4,520	2,152	1,362	944	617
MEAN	8.73	12.6	14.8	24.6	206	213	165	146	71.7	43.9	30.5	20.6
MAX	9.5	27	26	81	1,830	302	204	177	93	54	38	23
MIN	8.2	8.8	9.3	11	20	155	147	97	55	38	24	18
AC-FT	537	749	909	1,510	11,460	13,070	9,840	8,970	4,270	2,700	1,870	1,220

CAL YR 1972 TOTAL 7,276.4 MEAN 19.9 MAX 134 MIN 8.2 AC-FT 14,430
WTR YR 1973 TOTAL 28,791.9 MEAN 78.9 MAX 1,830 MIN 8.2 AC-FT 57,110

11082000 WEST FORK SAN GABRIEL RIVER AT CAMP RINCON, CALIF.

LOCATION.--Lat 34°14'28", long 117°51'45", Los Angeles County, in Angeles National Forest, on right bank 0.2 mile upstream from Camp Rincon, 0.5 mile downstream from North Fork, and 6 miles downstream from Cogswell Dam.

DRAINAGE AREA.--104 sq mi.

PERIOD OF RECORD.--October 1927 to current year.

GAGE.--Water-stage recorder. Datum of gage is 1,474.94 ft above mean sea level (levels by Los Angeles County Flood Control District). See WSP 1735 for history of changes prior to July 3, 1941.

AVERAGE DISCHARGE.--46 years, 68.2 cfs (49,410 acre-ft per year).

EXTREMES.--Current year: Maximum discharge, about 15,200 cfs Feb. 11, based on computation of inflow to reservoir; minimum daily, 5.1 cfs Oct. 1, 6.
Period of record: Maximum discharge, 34,000 cfs (estimated) Mar. 2, 1938; no flow at times in 1928-29.

REMARKS.--Flow partly regulated by Cogswell flood-control reservoir since 1934 (capacity, 9,339 acre-ft). No diversion above station. See schematic diagram of San Gabriel and Los Angeles River basins.

COOPERATION.--Records furnished by Los Angeles County Flood Control District and reviewed by Geological Survey.

DISCHARGE, IN CUBIC FEET PER SECOND, WATER YEAR OCTOBER 1972 TO SEPTEMBER 1973

DAY	OCT	NOV	DEC	JAN	FEB	MAR	APR	MAY	JUN	JUL	AUG	SEP
1	5.1	6.6	12	12	18	227	189	72	42	35	28	23
2	5.3	6.6	12	12	17	164	155	70	50	35	26	26
3	5.5	6.6	12	12	29	152	129	68	49	33	25	25
4	5.5	6.6	25	12	33	147	156	66	46	33	25	23
5	5.3	6.6	20	12	23	137	152	66	42	33	25	26
6	5.1	6.6	16	12	104	132	152	62	41	33	25	26
7	5.3	6.6	22	12	259	184	152	60	39	32	25	23
8	5.6	6.6	18	11	119	239	152	58	39	33	25	25
9	6.0	6.6	15	14	74	233	152	56	39	32	25	25
10	6.2	6.6	14	13	132	229	149	54	38	32	25	26
11	6.1	9.6	14	12	3,760	223	149	50	38	32	26	28
12	6.1	7.8	14	12	569	269	149	50	36	32	28	28
13	6.0	7.1	13	12	393	311	149	50	36	32	26	28
14	6.0	26	14	11	571	359	149	50	38	36	26	28
15	5.8	12	14	11	695	347	146	49	39	41	25	28
16	7.8	31	13	39	394	337	122	47	38	38	23	29
17	29	28	13	58	437	332	100	47	38	42	21	30
18	29	18	13	85	419	329	98	50	36	42	20	26
19	37	16	13	100	403	258	93	50	33	44	20	28
20	35	15	13	41	389	264	88	50	32	44	19	30
21	33	14	13	30	303	177	81	49	36	39	18	32
22	32	13	13	23	150	170	79	47	38	33	17	32
23	29	13	12	20	129	164	74	46	38	33	16	32
24	25	12	12	20	118	159	74	46	36	32	16	30
25	7.1	12	12	21	107	152	74	47	35	30	16	29
26	6.5	12	12	22	100	150	74	46	35	30	17	28
27	6.5	12	12	20	140	153	74	42	38	30	25	26
28	6.5	12	12	19	365	208	74	39	38	29	25	23
29	6.4	12	12	18	------	209	74	38	36	29	20	23
30	6.3	12	12	20	------	202	74	38	35	29	20	23
31	6.3	------	12	19	------	197	------	39	------	28	20	------
TOTAL	387.3	360.5	434	735	10,250	6,814	3,533	1,602	1,154	1,056	698	809
MEAN	12.5	12.0	14.0	23.7	366	220	118	51.7	38.5	34.1	22.5	27.0
MAX	37	31	25	100	3,760	359	189	72	50	44	28	32
MIN	5.1	6.6	12	11	17	132	74	38	32	28	16	23
AC-FT	768	715	861	1,460	20,330	13,520	7,010	3,180	2,290	2,090	1,380	1,600

CAL YR 1972 TOTAL 5,719.0 MEAN 15.6 MAX 72 MIN 5.1 AC-FT 11,340
WTR YR 1973 TOTAL 27,832.8 MEAN 76.3 MAX 3,760 MIN 5.1 AC-FT 55,210

11084500 FISH CREEK NEAR DUARTE, CALIF.

LOCATION.--Lat 34°09'57", long 117°55'24", in SW¼SW¼SW¼ sec.15, T.1 N., R.10 W., Los Angeles County, on left bank 0.8 mile upstream from mouth of canyon, and 3.2 miles northeast of Duarte.

DRAINAGE AREA.--6.36 sq mi.

PERIOD OF RECORD.--July to September 1916, July 1917 to current year.

GAGE.--Water-stage recorder. Broad-crested weir since July 1917, restored in December 1938. Datum of gage is 905.9 ft above mean sea level. See WSP 1315-B for history of changes prior to Dec. 7, 1938. Dec. 7, 1938, to Oct. 3, 1951, at datum 1 ft higher.

AVERAGE DISCHARGE.--56 years (1917-73), 4.61 cfs (3,340 acre-ft per year).

EXTREMES.--Current year: Maximum discharge, 1,590 cfs Feb. 11 (gage height, 6.20 ft); minimum daily, 0.19 cfs Oct. 25.
Period of record: Maximum discharge, 13,000 cfs Jan. 25, 1969 (gage height, 11.98 ft, from inside gage), from rating curve extended above 1,100 cfs on basis of slope-area measurement of maximum flow; maximum gage height, about 14.5 ft Feb. 11, 16, 1959 (from debris wave); no flow at times in some years.

REMARKS.--No regulation or diversion above station. See schematic diagram of San Gabriel and Los Angeles River basins.

COOPERATION.--Records furnished by Los Angeles County Flood Control District and reviewed by Geological Survey.

DISCHARGE, IN CUBIC FEET PER SECOND, WATER YEAR OCTOBER 1972 TO SEPTEMBER 1973

DAY	OCT	NOV	DEC	JAN	FEB	MAR	APR	MAY	JUN	JUL	AUG	SEP
1	.63	.29	.80	.70	2.3	28	16	5.7	3.3	2.3	1.8	1.5
2	.84	.29	.80	.70	2.2	21	15	5.6	3.2	2.2	1.8	1.5
3	.93	.29	.80	.70	4.1	17	14	5.6	3.2	2.2	1.8	1.5
4	.93	.34	5.2	.70	3.4	15	13	5.5	3.1	2.2	1.9	1.5
5	.93	.34	2.2	.70	2.7	13	13	5.4	3.0	2.2	1.9	1.5
6	.53	.39	1.3	.60	23	22	12	5.3	3.0	2.1	1.9	1.4
7	.76	.48	4.6	.60	54	24	11	5.2	2.9	2.1	1.9	1.4
8	.40	.53	2.7	.60	28	29	11	5.2	2.8	2.1	1.8	1.4
9	.50	.53	1.9	.60	18	26	10	5.1	2.7	2.1	1.8	1.4
10	.40	.63	1.5	.60	39	21	9.0	5.0	2.7	2.0	1.8	1.4
11	.40	2.9	1.2	.50	480	65	9.0	4.9	2.6	2.0	1.7	1.4
12	.43	1.0	1.1	.50	69	25	8.5	4.8	2.6	2.0	1.7	1.4
13	.43	.68	1.1	.50	50	24	8.4	4.7	2.6	2.0	1.7	1.4
14	.48	4.0	1.0	.50	38	24	8.2	4.6	2.6	1.9	1.6	1.4
15	.53	1.4	.90	.50	34	23	8.0	4.6	2.6	1.9	1.6	1.4
16	.53	8.7	.60	5.0	28	23	7.8	4.5	2.5	1.9	1.6	1.3
17	.53	4.4	1.0	6.6	22	22	7.6	4.4	2.5	1.8	1.6	1.3
18	.58	1.7	.90	5.0	21	22	7.4	4.3	2.5	1.8	1.6	1.3
19	1.5	1.2	1.0	15	19	21	7.2	4.3	2.5	1.8	1.6	1.3
20	.68	1.0	1.0	10	19	55	7.0	4.2	2.5	1.8	1.6	1.3
21	.39	.93	1.0	8.5	19	30	6.8	4.1	2.4	1.8	1.6	1.3
22	.29	.84	1.1	6.5	18	25	6.6	4.0	2.4	1.7	1.6	1.3
23	.24	.84	1.1	4.5	18	24	6.4	4.0	2.4	1.7	1.5	1.3
24	.24	.80	1.1	3.3	17	23	6.3	3.9	2.4	1.7	1.5	1.3
25	.19	.80	1.2	3.3	17	22	6.2	3.8	2.4	1.6	1.5	1.2
26	.24	.80	1.2	3.1	16	21	6.2	3.8	2.3	1.6	1.5	1.2
27	.29	.80	1.2	2.7	27	20	6.1	3.7	2.3	1.6	1.5	1.2
28	.29	.80	1.0	2.5	54	19	6.0	3.6	2.3	1.7	1.5	1.2
29	.29	.80	1.0	2.4	------	18	5.9	3.5	2.3	1.7	1.5	1.2
30	.24	.80	.80	2.6	------	17	5.8	3.5	2.3	1.7	1.5	1.2
31	.29	------	.70	2.4	------	16	------	3.4	------	1.7	1.5	------
TOTAL	15.98	39.30	43.00	92.40	1,142.7	755	265.4	140.2	78.9	58.9	51.4	40.4
MEAN	.52	1.31	1.39	2.98	40.8	24.4	8.85	4.52	2.63	1.90	1.66	1.35
MAX	1.5	8.7	5.2	15	480	65	16	5.7	3.3	2.3	1.9	1.5
MIN	.19	.29	.60	.50	2.2	13	5.8	3.4	2.3	1.6	1.5	1.2
AC-FT	32	78	85	183	2,270	1,500	526	278	156	117	102	80

CAL YR 1972 TOTAL 345.98 MEAN .95 MAX 8.7 MIN .10 AC-FT 686
WTR YR 1973 TOTAL 2,723.58 MEAN 7.46 MAX 480 MIN .19 AC-FT 5,400

11085000 SAN GABRIEL RIVER, BELOW SANTA FE DAM, NEAR BALDWIN PARK, CALIF.

LOCATION.--Lat 34°06'44", long 117°58'07", in SE¼NE¼SW¼ sec.6, T.1 S., R.10 W., Los Angeles County, on left bank at stilling basin of outlet of Santa Fe flood-control dam, 500 ft downstream from axis of dam, and 1.7 miles north of Baldwin Park.

DRAINAGE AREA.--236 sq mi.

PERIOD OF RECORD.--October 1942 to current year.

GAGE.--Water-stage recorder. Datum of gage is 400.00 ft above mean sea level (levels by Corps of Engineers).

EXTREMES.--Current year: Maximum discharge, 340 cfs Mar. 22 (gage height, 11.16 ft); no flow most of year.
Period of record: Maximum discharge, 30,900 cfs Jan. 26, 1969 (gage height, 22.20 ft); no flow for several months in each year.

REMARKS.--Records good. Flow regulated by Cogswell and San Gabriel flood-control reservoirs (combined capacity, 53,870 acre-ft), Morris Reservoir (capacity, 35,000 acre-ft), and Santa Fe flood-control reservoir (capacity, 32,640 acre-ft). Diversions above station for irrigation, power development, and ground-water replenishment. At times water diverted from right side of stilling basin to headwaters of Rio Hondo; 9,410 acre-ft diverted during year. See schematic diagram of San Gabriel and Los Angeles River basins.

COOPERATION.--Records of diversion to Rio Hondo and 15 discharge measurements furnished by Los Angeles County Flood Control District.

DISCHARGE, IN CUBIC FEET PER SECOND, WATER YEAR OCTOBER 1972 TO SEPTEMBER 1973

DAY	OCT	NOV	DEC	JAN	FEB	MAR	APR	MAY	JUN	JUL	AUG	SEP
1		0		0	0	138	310					
2		0		0	0	213	304					
3		0		0	0	280	274					
4		0		0	0	274	222					
5		0		0	0	151	53					
6		0		0	0	0	16					
7		0		0	0	0	0					
8		0		0	53	63	0					
9		0		0	79	204	0					
10		0		0	0	227	0					
11		0		0	0	222	0					
12		0		0	43	253	0					
13		0		0	98	298	0					
14		0		0	88	292	0					
15		0		0	105	292	0					
16		0		0	180	286	5.6					
17		.02		0	274	292	17					
18		0		0	269	292	18					
19		0		0	269	274	17					
20		0		.03	263	167	16					
21		0		.07	232	185	13					
22		0		.02	232	253	3.9					
23		0		0	204	298	0					
24		0		0	101	298	0					
25		0		0	101	298	0					
26		0		0	208	292	0					
27		0		0	180	304	0					
28		0		0	134	310	0					
29		0		0	------	304	0					
30		0		0	------	310	0					
31		------		0	------	310	------		------			------
TOTAL	0	.02	0	.12	3,113	7,380	1,269.5	0	0	0	0	0
MEAN	0	.0007	0	.004	111	238	42.3	0	0	0	0	0
MAX	0	.02	0	.07	274	310	310	0	0	0	0	0
MIN	0	0	0	0	0	0	0	0	0	0	0	0
AC-FT	0	.04	0	.2	6,170	14,640	2,520	0	0	0	0	0

CAL YR 1972 TOTAL 12.72 MEAN .03 MAX 7.4 MIN 0 AC-FT 25
WTR YR 1973 TOTAL 11,762.64 MEAN 32.2 MAX 310 MIN 0 AC-FT 23,330

11086300 SAN DIMAS CREEK BELOW SAN DIMAS DAM, CALIF.

LOCATION.--Lat 34°09'10", long 117°46'18", in SW¼SE¼ sec.24, T.1 N., R.9 W., Los Angeles County, on left bank 1,000 ft downstream from San Dimas Dam, and 3.7 miles northeast of San Dimas.

DRAINAGE AREA.--16.3 sq mi.

PERIOD OF RECORD.--October 1951 to current year. Prior to October 1956 monthly discharge only, published in WSP 1735.

GAGE.--Water-stage recorder and low-flow concrete control. Datum of gage is 1,325.0 ft above mean sea level (levels by Los Angeles County Flood Control District).

EXTREMES.--Current year: Maximum discharge, 149 cfs Feb. 11 (gage height, 1.45 ft); no flow Mar. 9, 10, 12. Period of record: Maximum discharge, 4,280 cfs Jan. 25, 1969 (gage height, 6.98 ft), from rating curve extended above 600 cfs on basis of computation of maximum flow over dam; no flow at times in most years.

REMARKS.--Flow regulated by San Dimas flood-control reservoir (capacity, 756 acre-ft) and at times by old water tunnel 150 ft upstream. No diversion above station. See schematic diagram of San Gabriel and Los Angeles River basins.

COOPERATION.--Records furnished by Los Angeles County Flood Control District and reviewed by Geological Survey.

DISCHARGE, IN CUBIC FEET PER SECOND, WATER YEAR OCTOBER 1972 TO SEPTEMBER 1973

DAY	OCT	NOV	DEC	JAN	FEB	MAR	APR	MAY	JUN	JUL	AUG	SEP
1	8.2	.60	.60	.60	1.2	7.3	24	1.0	13	1.5	1.5	1.0
2	3.1	.60	.60	.80	1.0	8.3	24	.90	13	1.5	1.5	1.0
3	.60	.60	.80	.80	1.2	12	24	.90	13	1.5	1.5	1.0
4	.60	.60	.80	.80	1.0	12	18	.90	13	1.5	1.5	1.0
5	.60	.60	.90	.80	1.0	12	15	.90	13	1.5	1.5	1.0
6	.60	.60	.90	.80	1.4	13	13	.90	13	1.5	1.5	1.0
7	.60	.80	.90	.90	1.4	12	13	.90	13	1.5	1.5	1.0
8	.60	.80	.90	.90	1.4	5.4	12	1.0	13	1.5	1.5	1.0
9	.60	.80	.90	1.0	1.4	0	8.9	1.0	13	1.5	1.5	1.0
10	.60	.80	.90	.90	1.5	0	8.3	1.0	12	1.5	1.5	1.0
11	.60	.90	.80	.90	76	.10	8.9	1.0	5.7	1.5	1.5	1.0
12	.60	.90	.80	1.0	142	0	8.9	1.0	1.2	1.5	1.5	1.0
13	.60	.90	.80	1.0	133	11	8.9	1.0	1.2	1.5	1.5	1.0
14	.60	.90	1.3	1.0	122	25	8.3	1.0	1.2	1.5	1.5	1.0
15	.60	.80	.80	1.0	51	25	8.3	1.0	.90	1.5	1.5	1.0
16	.60	.90	.80	1.2	8.9	24	8.3	1.0	.90	1.5	1.5	1.0
17	.60	.80	.80	.90	9.4	24	8.9	6.6	.90	1.5	1.5	1.0
18	.60	.80	.80	1.2	9.4	24	9.4	13	.80	1.5	1.5	1.0
19	.60	.80	.80	2.7	10	17	8.9	13	.80	1.5	1.5	1.0
20	.60	.80	.90	4.8	10	.10	8.9	13	.60	1.5	1.5	1.0
21	.60	.80	.80	4.8	10	.10	8.9	14	.60	1.5	1.5	1.0
22	.60	.80	.80	4.8	9.4	6.2	8.9	14	.90	1.5	1.4	1.0
23	.60	.80	.80	9.7	6.7	12	8.9	14	1.5	1.5	1.4	1.0
24	.60	.80	.80	13	6.7	13	8.9	14	1.5	1.5	1.4	1.0
25	.60	.80	.80	13	8.9	13	6.6	14	1.5	1.5	1.2	1.0
26	.60	.80	.80	12	8.9	13	1.2	14	1.5	1.5	1.2	1.0
27	.60	.80	.80	10	7.3	9.4	1.2	13	1.5	1.5	1.2	1.0
28	.60	.80	.80	9.8	7.8	18	1.2	13	1.5	1.5	1.2	1.0
29	.60	.80	.80	5.6	------	26	1.0	13	1.5	1.5	1.2	1.0
30	.60	.80	.80	1.0	------	25	1.0	13	1.5	1.5	1.0	1.0
31	.60	------	.60	1.2	------	24	------	13	------	1.5	1.0	------
TOTAL	28.70	23.30	25.40	108.90	649.9	391.90	295.7	210.00	156.70	46.5	43.7	30.0
MEAN	.93	.78	.82	3.51	23.2	12.6	9.86	6.77	5.22	1.50	1.41	1.00
MAX	8.2	.90	1.3	13	142	26	24	14	13	1.5	1.5	1.0
MIN	.60	.60	.60	.60	1.0	0	1.0	.90	.60	1.5	1.0	1.0
AC-FT	57	46	50	216	1,290	777	587	417	311	92	87	60

CAL YR 1972 TOTAL 516.83 MEAN 1.41 MAX 9.8 MIN .12 AC-FT 1,030
WTR YR 1973 TOTAL 2,010.70 MEAN 5.51 MAX 142 MIN 0 AC-FT 3,990

11086990 SAN JOSE CREEK NEAR EL MONTE, CALIF.

LOCATION.--Lat 34°01'55", long 118°00'40", in El Monte Grant, Los Angeles County, on right bank of San Jose flood channel, 1,650 ft upstream from Workman Mill Road, and 2.7 miles southeast of El Monte.

DRAINAGE AREA.--87.8 sq mi.

PERIOD OF RECORD.--October 1964 to current year.

GAGE.--Water-stage recorder. Datum of gage is 248.52 ft above mean sea level (levels by Los Angeles County Flood Control District).

AVERAGE DISCHARGE.--9 years, 30.7 cfs (22,240 acre-ft per year).

EXTREMES.--Current year: Maximum discharge, 6,440 cfs Feb. 13 (gage height, 5.70 ft); minimum daily, 7.0 cfs Jan. 8.
Period of record: Maximum discharge, 10,200 cfs Jan. 24, 1967 (gage height, 6.80 ft, from outside gage); no flow for some days in some years.

REMARKS.--Records poor. No regulation above station. One small diversion for ground-water recharge. At times effluent from city of Pomona's sewage reclamation plant is released to creek above Spadra and at Lemon Street. Bypass to the original San Jose Creek channel has been closed since Oct. 1, 1964. See schematic diagram of San Gabriel and Los Angeles River basins.

COOPERATION.--Records furnished by Los Angeles County Flood Control District and reviewed by Geological Survey.

DISCHARGE, IN CUBIC FEET PER SECOND, WATER YEAR OCTOBER 1972 TO SEPTEMBER 1973

DAY	OCT	NOV	DEC	JAN	FEB	MAR	APR	MAY	JUN	JUL	AUG	SEP
1	9.0	9.0	9.0	9.0	9.0	20	10	9.0	8.0	12	12	12
2	9.0	9.0	9.0	9.0	9.0	15	10	9.0	8.0	12	12	12
3	9.0	9.0	9.0	9.0	202	10	9.0	9.0	8.0	12	12	12
4	9.0	9.0	455	20	26	10	9.0	9.0	8.0	12	12	12
5	9.0	9.0	9.0	10	19	10	9.0	9.0	8.0	12	12	12
6	9.0	9.0	9.0	9.0	405	87	10	10	9.0	11	11	11
7	9.0	9.0	269	8.0	810	29	10	10	9.0	11	11	11
8	9.0	87	25	7.0	15	238	10	10	9.0	11	11	11
9	9.0	9.0	9.0	108	10	25	11	10	9.0	11	11	11
10	9.0	9.0	9.0	33	77	15	11	10	9.0	11	11	11
11	9.0	309	9.0	10	1,820	252	11	11	10	10	10	10
12	9.0	9.0	9.0	10	200	63	12	11	10	10	10	10
13	9.0	9.0	9.0	10	766	20	12	11	10	10	10	10
14	9.0	511	9.0	10	20	15	12	11	10	10	10	11
15	9.0	9.0	9.0	10	15	10	11	11	10	10	10	11
16	9.0	490	9.0	932	10	9.0	11	10	11	11	11	12
17	9.0	248	9.0	69	10	9.0	11	10	11	11	11	13
18	20	9.0	9.0	573	10	9.0	10	10	11	11	11	13
19	283	9.0	9.0	65	10	9.0	10	10	11	11	11	13
20	58	9.0	9.0	15	10	335	10	10	11	11	11	12
21	9.0	9.0	9.0	12	9.0	293	10	9.0	12	12	12	12
22	9.0	9.0	9.0	10	9.0	62	9.0	9.0	12	12	12	12
23	9.0	9.0	9.0	9.0	9.0	15	9.0	9.0	12	12	12	12
24	9.0	9.0	9.0	9.0	9.0	10	9.0	9.0	12	12	12	12
25	9.0	9.0	9.0	12	9.0	10	8.0	9.0	12	12	12	12
26	9.0	9.0	9.0	12	9.0	10	8.0	8.0	12	12	12	12
27	9.0	9.0	9.0	9.0	83	10	8.0	8.0	12	12	12	12
28	9.0	9.0	9.0	9.0	247	25	8.0	8.0	12	12	12	12
29	9.0	9.0	9.0	9.0	------	15	8.0	8.0	12	12	12	12
30	9.0	9.0	9.0	77	------	10	8.0	8.0	12	12	12	12
31	9.0	------	9.0	10	------	8.0	------	8.0	------	12	12	------
TOTAL	613.0	1,870.0	1,001.0	2,104.0	4,837.0	1,658.0	294.0	293.0	310.0	352	352	350
MEAN	19.8	62.3	32.3	67.9	173	53.5	9.80	9.45	10.3	11.4	11.4	11.7
MAX	283	511	455	932	1,820	335	12	11	12	12	12	13
MIN	9.0	9.0	9.0	7.0	9.0	8.0	8.0	8.0	8.0	10	10	10
AC-FT	1,220	3,710	1,990	4,170	9,590	3,290	583	581	615	698	698	694

CAL YR 1972 TOTAL 6,589.9 MEAN 18.0 MAX 511 MIN 3.0 AC-FT 13,070
WTR YR 1973 TOTAL 14,034.0 MEAN 38.4 MAX 1,820 MIN 7.0 AC-FT 27,840

11087020 SAN GABRIEL RIVER ABOVE WHITTIER NARROWS DAM, CALIF.

LOCATION.--Lat 34°02'00", long 118°02'14", in La Puente Grant, Los Angeles County, on downstream side of bridge near center on Peck Road, 0.8 mile downstream from San Jose flood channel, 1.2 miles upstream from axis of Whittier Narrows Dam, and 1.8 miles south of El Monte.

DRAINAGE AREA.--353 sq mi.

PERIOD OF RECORD.--October 1955 to September 1957, October 1963 to current year.

GAGE.--Water-stage recorder. Altitude of gage is 220 ft (from topographic map).

EXTREMES.--Current year: Maximum discharge, 13,300 cfs Jan. 16 (gage height, 7.43 ft); minimum daily, 6.1 cfs June 11, 14.
Period of record: Maximum discharge, 46,600 cfs Jan. 25, 1969 (gage height, 10.90 ft); no flow for part of most years.

REMARKS.--Records good. Flow regulated by San Gabriel, Cogswell, and Santa Fe flood-control reservoirs (combined capacity, 90,670 acre-ft), several small flood-control reservoirs (combined capacity, 19,100 acre-ft), and Morris Reservoir (capacity, 35,000 acre-ft). Many diversions above station for irrigation, power development, and ground-water replenishment. Colorado River water released to the San Gabriel River at a site 14.9 miles upstream from gage, at Metropolitan Water District aqueduct crossing on San Dimas Creek for ground-water replenishment. Los Angeles County Flood Control District diverted 9,410 acre-ft of water from San Gabriel River below Santa Fe Dam to Rio Hondo during current year. See schematic diagram of San Gabriel and Los Angeles River basins.

COOPERATION.--Records of diversion to Rio Hondo furnished by Los Angeles County Flood Control District.

DISCHARGE, IN CUBIC FEET PER SECOND, WATER YEAR OCTOBER 1972 TO SEPTEMBER 1973

DAY	OCT	NOV	DEC	JAN	FEB	MAR	APR	MAY	JUN	JUL	AUG	SEP
1	7.3	20	130	206	214	26	34	206	215	201	221	86
2	7.3	122	166	214	206	20	34	206	217	199	216	82
3	8.2	136	206	214	396	17	28	200	209	206	219	78
4	10	126	1,410	246	62	70	12	190	196	203	222	102
5	12	126	22	214	22	62	18	190	22	206	223	90
6	12	126	8.7	214	736	190	90	190	9.4	204	218	94
7	10	126	370	214	1,660	122	94	190	8.8	210	213	94
8	10	148	50	166	38	532	90	190	8.6	205	212	94
9	10	130	12	94	16	36	94	190	8.2	208	212	90
10	10	126	8.2	54	98	20	94	190	7.4	216	212	90
11	12	254	28	12	4,060	461	98	214	6.1	229	213	94
12	10	16	198	41	222	110	98	214	7.6	237	211	94
13	10	12	206	214	1,130	31	98	206	7.2	252	210	90
14	10	755	206	214	22	47	98	206	6.1	260	208	94
15	12	18	206	214	22	44	98	206	29	252	211	98
16	14	850	206	2,490	10	28	101	206	186	246	206	94
17	12	300	206	126	8.2	17	104	206	189	244	207	98
18	12	14	206	1,230	41	14	103	206	192	249	210	94
19	214	8.7	206	166	70	16	102	206	187	246	202	98
20	26	10	206	16	78	850	130	206	190	255	198	94
21	12	118	214	14	66	487	191	206	195	248	204	94
22	10	126	214	12	20	172	195	206	196	240	212	86
23	10	126	206	12	58	17	194	206	194	240	212	90
24	10	126	214	10	17	20	194	206	193	241	215	86
25	12	126	206	8.7	7.3	28	194	214	191	247	213	82
26	16	126	262	14	6.4	28	206	203	192	245	216	118
27	14	130	214	10	82	31	206	202	193	243	217	154
28	12	130	214	10	892	50	206	200	192	241	219	160
29	12	130	214	10	------	36	206	207	197	230	222	160
30	12	130	214	58	------	36	206	212	200	223	193	160
31	14	------	214	142	------	36	------	207	------	217	86	------
TOTAL	562.8	4,691.7	6,642.9	6,859.7	10,259.9	3,654	3,616	6,287	3,844.4	7,143	6,453	3,038
MEAN	18.2	156	214	221	366	118	121	203	128	230	208	101
MAX	214	850	1,410	2,490	4,060	850	206	214	217	260	223	160
MIN	7.3	8.7	8.2	8.7	6.4	14	12	190	6.1	199	86	78
AC-FT	1,120	9,310	13,180	13,610	20,350	7,250	7,170	12,470	7,630	14,170	12,800	6,030

CAL YR 1972 TOTAL 18,524.7 MEAN 50.6 MAX 1,410 MIN 2.8 AC-FT 36,740
WTR YR 1973 TOTAL 63,052.4 MEAN 173 MAX 4,060 MIN 6.1 AC-FT 125,100

11087500 SAN GABRIEL RIVER AT PICO, CALIF.

LOCATION.--Lat 34°00'47", long 118°03'48", in Paso de Bartolo Grant, Los Angeles County, on right levee 460 ft downstream from San Gabriel River Parkway, 4,200 ft downstream from axis of Whittier Narrows Dam, and 1.4 miles northeast of Pico Rivera.

DRAINAGE AREA.--447 sq mi.

PERIOD OF RECORD.--October 1928 to current year. Since 1954 Colorado River water released to San Gabriel River above station. Since 1954 records not equivalent.

GAGE.--Water-stage recorder. Datum of gage is 181.55 ft above mean sea level. See WSP 1735 for history of changes prior to Mar. 6, 1952. Mar. 6, 1952, to Aug. 9, 1968, at bridge 0.5 mile downstream at datum 9.05 ft lower.

EXTREMES.--Current year: Maximum discharge, 5,620 cfs Feb. 11 (gage height, 5.31 ft); no flow Oct. 1-5, 18, Oct. 26-30.
Period of record: Maximum discharge, 22,700 cfs Mar. 2, 1938; no flow for periods in most years.

REMARKS.--Flow regulated by Cogswell Reservoir since 1934 and San Gabriel flood-control reservoir since 1939 (combined capacity, 46,087 acre-ft), Morris Reservoir since 1934 (capacity, 35,000 acre-ft), Santa Fe flood-control reservoir since October 1942 (capacity, 36,800 acre-ft), Whittier Narrows flood-control reservoir since January 1956 (capacity, 36,160 acre-ft), and several small flood-control reservoirs (combined capacity, 19,100 acre-ft). Diversions for irrigation, power development, and ground-water replenishment. For Colorado River water released to San Gabriel River for ground-water replenishment see sta 11087020. During the current year, 9,410 acre-ft was diverted from the San Gabriel River below Santa Fe Dam to Rio Hondo. See schematic diagram of San Gabriel and Los Angeles River basins.

COOPERATION.--Records furnished by Los Angeles County Flood Control District and reviewed by Geological Survey.

DISCHARGE, IN CUBIC FEET PER SECOND, WATER YEAR OCTOBER 1972 TO SEPTEMBER 1973

DAY	OCT	NOV	DEC	JAN	FEB	MAR	APR	MAY	JUN	JUL	AUG	SEP
1	0	25	74	71	64	21	54	54	80	88	55	20
2	0	76	74	69	64	17	54	47	76	76	57	20
3	0	110	74	74	379	14	54	50	71	71	57	40
4	0	110	1,180	86	66	48	36	49	64	78	58	70
5	0	110	32	76	18	46	25	54	18	74	58	64
6	3.3	112	5.4	73	757	88	82	55	26	74	55	57
7	19	112	667	73	1,350	127	67	54	25	73	54	58
8	20	127	39	80	43	367	50	54	23	64	54	59
9	20	120	5.0	101	19	39	54	49	23	64	54	60
10	21	125	5.0	54	92	21	58	54	23	65	54	61
11	21	274	5.0	7.0	2,540	320	58	58	23	64	54	62
12	22	2.0	61	7.0	291	92	58	64	24	67	57	63
13	22	1.0	67	74	848	23	57	62	23	65	60	68
14	22	573	69	78	22	26	50	64	23	65	63	67
15	23	33	69	78	19	26	58	64	20	64	63	66
16	25	950	71	1,320	14	20	60	64	54	69	60	65
17	14	307	71	497	11	18	98	64	71	57	58	64
18	0	11	71	560	20	22	120	62	73	65	56	64
19	85	3.0	69	401	86	20	116	62	67	64	56	64
20	28	1.0	71	12	92	415	77	64	76	64	56	64
21	8.8	83	71	7.4	71	310	57	64	92	64	56	64
22	4.0	98	71	7.4	13	284	55	69	154	67	56	64
23	2.0	100	71	6.4	58	21	52	69	128	65	56	64
24	1.0	94	73	6.0	32	22	54	158	63	62	56	64
25	.50	76	71	5.4	10	30	54	140	63	64	56	30
26	0	76	71	7.4	9.5	30	54	76	78	76	55	15
27	0	76	71	5.4	11	29	52	73	90	149	55	30
28	0	71	71	5.7	688	52	54	71	88	156	55	40
29	0	62	71	5.4	------	39	54	74	88	161	55	45
30	0	67	71	47	------	39	57	76	88	136	55	49
31	22	------	71	73	------	50	------	76	------	58	40	------
TOTAL	383.60	3,985.0	3,562.4	3,967.5	7,687.5	2,676	1,829	2,094	1,815	2,429	1,734	1,621
MEAN	12.4	133	115	128	275	86.3	61.0	67.5	60.5	78.4	55.9	54.0
MAX	85	950	1,180	1,320	2,540	415	120	158	154	161	63	70
MIN	0	1.0	5.0	5.4	9.5	14	25	47	18	57	40	15
AC-FT	761	7,900	7,070	7,870	15,250	5,310	3,630	4,150	3,600	4,820	3,440	3,220

CAL YR 1972 TOTAL 13,326.70 MEAN 36.4 MAX 1,180 MIN 0 AC-FT 26,430
WTR YR 1973 TOTAL 33,784.00 MEAN 92.6 MAX 2,540 MIN 0 AC-FT 67,010

11088000 SAN GABRIEL RIVER AT SPRING STREET, NEAR LOS ALAMITOS, CALIF.

LOCATION.--Lat 33°48'43", long 118°05'24", in SE¼SE¼NW¼ sec.24, T.4 S., R.12 W., Los Angeles County, on right levee 455 ft upstream from Spring Street bridge, 1.3 miles upstream from Coyote Creek, and 1.3 miles northwest of Los Alamitos.

DRAINAGE AREA.-472 sq mi.

PERIOD OF RECORD.--October 1927 to September 1951, October 1952 to current year. Monthly discharge only for October 1927 to September 1936, published in WSP 1315-B.

GAGE.--Water-stage recorder. Datum of gage is 11.87 ft above mean sea level (levels by Los Angeles County Flood Control District). Prior to October 1952, at datum 4.82 ft higher and October 1952 to Nov. 17, 1964, at site 455 ft downstream at datum 0.38 ft higher.

AVERAGE DISCHARGE.--45 years, 29.7 cfs (21,520 acre-ft per year).

EXTREMES.--Current year: Maximum discharge, 5,680 cfs Jan. 16 (gage height, 7.13 ft); minimum daily, 11 cfs Dec. 20, Sept. 2.
Period of record: Maximum discharge, 27,000 cfs (estimated) Mar. 2, 1938; no flow for several months in most years.

REMARKS.--Regulation and diversions same as sta 11087500. Additional diversion to percolation basin near Washington Boulevard and percolation basins in streambed. AVERAGE DISCHARGE represents flow to ocean during period of record regardless of upstream development. See schematic diagram of San Gabriel and Los Angeles River basins.

COOPERATION.--Records furnished by Los Angeles County Flood Control District and reviewed by Geological Survey.

DISCHARGE, IN CUBIC FEET PER SECOND, WATER YEAR OCTOBER 1972 TO SEPTEMBER 1973

DAY	OCT	NOV	DEC	JAN	FEB	MAR	APR	MAY	JUN	JUL	AUG	SEP
1	53	51	53	14	50	54	42	13	47	13	18	26
2	51	51	30	14	50	50	44	14	24	13	52	11
3	55	51	15	16	148	54	44	40	14	21	53	12
4	55	55	802	49	132	52	45	40	14	45	32	13
5	53	53	105	40	51	54	44	21	38	44	14	21
6	53	50	56	24	370	63	42	12	50	44	15	47
7	55	50	229	13	1,590	60	27	13	49	24	13	49
8	53	50	75	22	140	269	14	13	49	13	14	26
9	54	55	55	89	54	65	14	15	46	13	52	14
10	53	58	55	55	52	54	13	40	46	15	53	14
11	54	129	53	40	2,710	231	14	41	50	43	30	15
12	55	56	21	42	206	95	40	22	50	44	14	15
13	55	54	13	26	906	55	40	13	52	48	13	50
14	55	613	51	14	55	54	24	12	53	29	13	52
15	53	79	51	13	53	55	12	13	52	25	26	29
16	47	707	29	931	53	52	14	14	27	12	48	15
17	51	330	14	602	51	34	13	41	14	12	50	15
18	55	57	13	221	48	13	15	41	14	13	27	15
19	92	50	12	551	52	14	40	40	16	43	28	18
20	54	52	11	53	54	396	40	40	52	19	50	55
21	58	33	49	50	50	75	22	46	47	21	50	56
22	54	21	51	41	55	317	14	44	47	12	49	30
23	56	52	27	15	54	39	13	46	28	12	49	18
24	54	50	14	13	50	40	13	47	15	13	50	17
25	56	28	14	49	53	39	14	46	15	17	30	17
26	55	15	14	49	54	42	40	43	15	50	26	19
27	55	14	14	50	57	44	40	41	34	52	13	55
28	57	14	51	48	509	44	22	41	42	27	12	53
29	56	14	51	49	------	46	13	43	47	13	14	22
30	57	51	27	96	------	42	13	43	25	14	48	16
31	54	------	13	50	------	42	------	43	------	14	49	------
TOTAL	1,718	2,943	2,068	3,339	7,707	2,544	785	981	1,072	778	1,005	815
MEAN	55.4	98.1	66.7	108	275	82.1	26.2	31.6	35.7	25.1	32.4	27.2
MAX	92	707	802	931	2,710	396	45	47	53	52	53	56
MIN	47	14	11	13	48	13	12	12	14	12	12	11
AC-FT	3,410	5,840	4,100	6,620	15,290	5,050	1,560	1,950	2,130	1,540	1,990	1,620

CAL YR 1972 TOTAL 20,509 MEAN 56.0 MAX 802 MIN 11 AC-FT 40,680
WTR YR 1973 TOTAL 25,755 MEAN 70.6 MAX 2,710 MIN 11 AC-FT 51,090

11088500 BREA CREEK BELOW BREA DAM, NEAR FULLERTON, CALIF.

LOCATION.--Lat 33°53'16", long 117°55'32", in NE¼NE¼NE¼ sec.28, T.3 S., R.10 W., Orange County, on right bank 0.2 mile downstream from Brea Dam, and 1 mile north of Fullerton.

DRAINAGE AREA.--21.6 sq mi.

PERIOD OF RECORD.--January 1942 to current year.

GAGE.--Water-stage recorder. V-notch sharp-crested weir since October 1946. Datum of gage is 196.67 ft above mean sea level (levels by Corps of Engineers). Prior to Dec. 4, 1964, at datum 1.03 ft higher.

AVERAGE DISCHARGE.--31 years, 1.16 cfs (840 acre-ft per year).

EXTREMES.--Current year: Maximum discharge, 368 cfs Jan. 16 (gage height, 4.93 ft); maximum gage height, 5.29 ft Nov. 14; minimum daily, 0.09 cfs Nov. 20, 21, 23-25.
Period of record: Maximum discharge, 970 cfs Feb. 25, 1969 (gage height, 6.30 ft), from rating curve extended above 340 cfs; no flow for parts of most years.

REMARKS.--Records fair. Flow regulated by Brea flood-control reservoir (capacity, 4,100 acre-ft). No diversion above station. Since August 1966, low flow mostly the result of irrigation waste water from golf course 0.8 mile upstream. See schematic diagram of San Gabriel and Los Angeles River basins.

DISCHARGE, IN CUBIC FEET PER SECOND, WATER YEAR OCTOBER 1972 TO SEPTEMBER 1973

DAY	OCT	NOV	DEC	JAN	FEB	MAR	APR	MAY	JUN	JUL	AUG	SEP
1	.34	.30	.16	.19	.98	.46	.35	.30	.43	.31	.26	.32
2	.26	.34	.22	.22	.96	.41	.35	.38	.31	.29	.30	.36
3	.26	.39	.22	.22	13	.37	.35	.54	.30	.29	.33	.48
4	.30	.34	58	.26	6.0	.31	.35	.54	.35	.32	.28	.39
5	.34	.39	1.5	.22	1.7	.28	.35	.48	.37	.29	.28	.35
6	.49	.49	.30	.22	32	6.8	.34	.56	.46	.29	.33	.46
7	.49	.66	14	.22	46	5.7	.34	.50	.43	.27	.33	.41
8	.30	.30	3.7	.22	7.4	23	.34	.54	.48	.26	.43	.39
9	.30	.34	.44	4.3	2.0	4.8	.34	.53	.43	.28	.37	.37
10	.22	.66	.30	1.9	5.5	1.9	.34	.46	.43	.36	.35	.28
11	.30	11	.34	.60	191	23	.33	.47	.43	.35	.33	.26
12	.34	.30	.26	.60	17	8.8	.33	.45	.46	.34	.37	.30
13	.44	.13	.26	.60	50	3.5	.33	.47	.48	.32	.39	.26
14	.26	69	.22	.60	5.6	2.1	.33	.45	.48	.29	.46	.28
15	.26	1.8	.22	.60	3.8	.90	.33	.47	.48	.30	.35	.25
16	.22	67	.22	90	2.0	.73	.32	.57	.48	.34	.39	.26
17	.22	48	.22	30	1.0	.53	.32	.45	.52	.31	.37	.37
18	5.4	5.3	.22	53	.60	.45	.32	.47	.50	.34	.33	.25
19	8.0	7.8	.22	13	.40	.34	.32	.47	.43	.28	.41	.25
20	.39	.09	.22	.60	.30	36	.32	.46	.35	.32	.39	.26
21	.22	.09	.19	.50	.27	17	.33	.44	.37	.28	.48	.23
22	.16	.11	.19	.40	.27	15	.39	.48	.39	.36	.41	.19
23	.26	.09	.19	.40	.27	2.9	.45	.48	.31	.25	.41	.20
24	.19	.09	.19	.30	.27	.78	.31	.42	.46	.33	.46	.25
25	.39	.09	.26	.30	.27	.63	.30	.41	.30	.40	.41	.19
26	.22	.11	.30	.60	.27	.53	.33	.54	.32	.28	.48	.20
27	.19	.11	.34	.40	3.1	.45	.33	.42	.32	.26	.50	.23
28	.22	.16	.26	.30	19	.41	.32	.43	.32	.24	.52	.28
29	.22	.11	.30	.30	------	.36	.35	.43	.32	.25	.43	.25
30	.22	.16	.22	7.8	------	.36	.38	.36	.31	.25	.44	.25
31	.26	------	.22	1.1	------	.36	------	.39	------	.27	.41	------
TOTAL	21.68	215.75	83.90	209.97	410.96	159.16	10.19	14.36	12.02	9.32	12.00	8.82
MEAN	.70	7.19	2.71	6.77	14.7	5.13	.34	.46	.40	.30	.39	.29
MAX	8.0	69	58	90	191	36	.45	.57	.52	.40	.52	.48
MIN	.16	.09	.16	.19	.27	.28	.30	.30	.30	.24	.26	.19
AC-FT	43	428	166	416	815	316	20	28	24	18	24	17

CAL YR 1972 TOTAL 390.92 MEAN 1.07 MAX 69 MIN .05 AC-FT 775.
WTR YR 1973 TOTAL 1,168.13 MEAN 3.20 MAX 191 MIN .09 AC-FT 2,320

11089500 FULLERTON CREEK BELOW FULLERTON DAM, NEAR BREA, CALIF.

LOCATION.--Lat 33°53'45", long 117°53'07", in NE¼NW¼SW¼ sec.24, T.3 S., R.10 W., Orange County, on left bank of outlet channel of Fullerton Dam, 1.6 miles southeast of Brea.

DRAINAGE AREA.--4.94 sq mi.

PERIOD OF RECORD.--October 1941 to current year.

GAGE.--Water-stage recorder. Altitude of gage is 250 ft (from topographic map). V-notch sharp-crested weir used Oct. 25, 1946, to Feb. 2, 1956. Prior to Dec. 3, 1971, at datum 3.00 ft higher.

AVERAGE DISCHARGE.--13 years (1941-54), 0.19 cfs (135 acre-ft per year); 19 years (1954-73), 0.52 cfs (377 acre-ft per year).

EXTREMES.--Current year: Maximum discharge, 26 cfs Mar. 2 (gage height, 3.93 ft); no flow many days.
Period of record: Maximum discharge, 313 cfs Jan. 25, 1969 (gage height, 7.32 ft, present datum); no flow at times in each year.

REMARKS.--Records good. Flow regulated by Fullerton flood-control reservoir (capacity, 706 acre-ft). Small tributary formerly entering below station diverted into reservoir since December 1954. See schematic diagram of San Gabriel and Los Angeles River basins.

DISCHARGE, IN CUBIC FEET PER SECOND, WATER YEAR OCTOBER 1972 TO SEPTEMBER 1973

DAY	OCT	NOV	DEC	JAN	FEB	MAR	APR	MAY	JUN	JUL	AUG	SEP
1	.02	0	.10	.02	.11	3.8	.07	.02		0	0	
2	.01	0	.09	.01	.09	2.8	.06	.02		0	0	
3	.01	0	.07	.01	1.7	.13	.05	.02		0	0	
4	0	0	5.5	.06	.69	.19	.03	.02		0	0	
5	0	0	5.6	.12	.67	.12	.03	.03		0	0	
6	0	0	.57	.14	5.6	1.0	.05	.03		0	0	
7	0	0	4.9	.11	7.9	.69	.05	.02		0	0	
8	0	0	1.5	.10	8.0	3.2	.04	.02		0	0	
9	0	0	.13	.65	1.4	7.9	.05	.02		0	0	
10	0	.05	.12	.27	.78	2.6	.05	.03		0	0	
11	0	4.7	.10	.11	8.4	2.3	.05	.03		0	0	
12	.01	.14	.09	.09	11	9.8	.05	.03		0	0	
13	.01	.08	.09	.09	11	.41	.05	.03		0	0	
14	.01	6.6	.08	.07	9.1	.11	.06	.03		0	0	
15	.04	6.9	.07	.07	7.5	.09	.05	.03		0	0	
16	.04	3.9	.07	2.1	6.0	.09	.05	.01		0	0	
17	.03	4.1	.07	18	4.3	.10	.04	.02		0	0	
18	.04	3.8	.07	17	2.2	.08	.03	.03		0	0	
19	.30	2.8	.06	19	.74	.07	.03	.03		0	0	
20	.01	2.5	.05	2.4	.09	6.9	.03	.03		0	0	
21	0	1.0	.05	.09	.09	5.4	.03	.03		0	.01	
22	0	.09	.05	.09	.08	4.9	.03	.03		0	.01	
23	0	.08	.05	.08	.07	.16	.03	.01		0	.01	
24	0	.07	.05	.07	.07	.11	.03	.01		0	0	
25	0	.07	.04	.11	.07	.12	.03	.01		0	0	
26	0	.07	.04	.10	.07	.12	.03	.02		0	0	
27	0	.05	.03	.06	.35	.09	.03	0		0	0	
28	0	.05	.03	.05	5.3	.10	.03	0		0	0	
29	0	.09	.03	.04	------	.10	.03	0		0	0	
30	0	.11	.03	1.4	------	.07	.03	0		.01	0	
31	0	------	.02	.17	------	.07	------	.01	------	0	0	------
TOTAL	.53	37.25	19.75	62.68	93.37	53.62	1.22	.62	0	.01	.03	0
MEAN	.017	1.24	.64	2.02	3.33	1.73	.041	.020	0	.0003	.001	0
MAX	.30	6.9	5.6	19	11	9.8	.07	.03	0	.01	.01	0
MIN	0	0	.02	.01	.07	.07	.03	0	0	0	0	0
AC-FT	1.1	74	39	124	185	106	2.4	1.2	0	.02	.06	0

CAL YR 1972 TOTAL 65.90 MEAN .18 MAX 6.9 MIN 0 AC-FT 131
WTR YR 1973 TOTAL 269.08 MEAN .74 MAX 19 MIN 0 AC-FT 534

11090200 FULLERTON CREEK AT RICHMAN AVENUE, AT FULLERTON, CALIF.

LOCATION.--Lat 33°51'45", long 117°55'55", in NW¼SW¼SE¼ sec.33, T.3 S., R.10 W., Orange County, on right bank 125 ft east of Richman Avenue, at Fullerton.

DRAINAGE AREA.--12.1 sq mi.

PERIOD OF RECORD.--October 1959 to current year.

GAGE.--Water-stage recorder. Datum of gage is 126.4 ft above mean sea level (levels by Orange County Flood Control District).

AVERAGE DISCHARGE.--14 years, 1.96 cfs (1,420 acre-ft per year).

EXTREMES.--Current year: Maximum discharge, 627 cfs Feb. 7 (gage height, 4.42 ft); no flow at times.
Period of record: Maximum discharge, 1,100 cfs Jan. 25, 1969 (gage height, 4.78 ft); no flow many days in each year.

REMARKS.--Flow regulated by Fullerton flood-control reservoir (capacity, 706 acre-ft). No diversion above station. See schematic diagram of San Gabriel and Los Angeles River basins.

COOPERATION.--Records furnished by Orange County Flood Control District and reviewed by Geological Survey.

DISCHARGE, IN CUBIC FEET PER SECOND, WATER YEAR OCTOBER 1972 TO SEPTEMBER 1973

DAY	OCT	NOV	DEC	JAN	FEB	MAR	APR	MAY	JUN	JUL	AUG	SEP
1	.10	0	.10	0	0	3.2	0	0	0	0	.10	.10
2	.10	0	.10	0	.10	2.4	0	0	0	0	.10	.10
3	.10	0	0	0	21	.10	0	0	0	.10	.10	.10
4	.10	0	63	0	7.1	3.0	.10	.10	0	0	.10	0
5	.20	0	6.9	0	2.4	2.5	0	0	0	0	.10	.10
6	.20	.20	1.6	0	36	8.8	0	0	0	0	.10	.10
7	.30	.10	21	0	56	7.7	0	0	0	0	.10	.10
8	.20	.10	6.0	.10	8.8	56	0	0	.10	0	.10	.10
9	.20	.10	.10	10	4.1	3.2	0	0	0	0	.10	.10
10	.30	8.4	0	.70	.30	.10	0	0	.10	0	.10	0
11	.30	36	0	0	84	136	0	0	.10	0	.10	.10
12	.30	.60	.20	.10	27	8.0	0	0	.10	0	.10	0
13	.20	.10	0	0	36	.40	0	0	.10	0	.10	0
14	.20	41	.10	0	8.4	.10	0	0	.10	0	.10	0
15	.10	7.2	.10	0	7.2	.10	0	0	.10	0	.10	0
16	.20	85	.10	86	6.4	.10	0	0	.10	0	.10	0
17	.30	47	0	14	6.0	.10	0	.10	.10	.10	.20	0
18	10	6.4	.30	53	5.0	.10	0	.10	.10	.10	.10	.10
19	15	6.0	.10	21	1.7	.10	0	.10	.10	.20	.10	0
20	.60	5.3	0	3.2	.10	55	.10	.10	.10	.20	0	.10
21	.20	.90	0	0	.10	11	0	.10	.30	.10	0	.10
22	.10	.10	0	0	0	3.7	0	.10	.30	.10	0	.20
23	.10	0	0	0	.10	.30	0	0	.20	.10	0	.30
24	.20	.10	0	0	0	0	0	0	.10	.10	0	.30
25	.20	.10	0	0	0	0	.10	0	.10	.10	0	.10
26	.20	.10	0	0	0	0	0	.10	.10	.10	0	0
27	.20	.10	0	0	24	0	0	.10	.10	.10	0	0
28	.10	.10	0	0	16	0	0	.10	.10	.10	0	0
29	.30	.10	0	0	------	0	0	0	.10	.10	0	0
30	.10	.10	0	14	------	0	0	0	.10	.20	0	0
31	.10	------	0	.10	------	0	------	0	------	.20	.10	------
TOTAL	30.80	245.20	99.70	202.20	357.80	302.00	.30	1.00	2.70	2.00	2.10	2.10
MEAN	.99	8.17	3.22	6.52	12.8	9.74	.010	.032	.090	.065	.068	.070
MAX	15	85	63	86	84	136	.10	.10	.30	.20	.20	.30
MIN	.10	0	0	0	0	0	0	0	0	0	0	0
AC-FT	61	486	198	401	710	599	.6	2.0	5.4	4.0	4.2	4.2

CAL YR 1972 TOTAL 440.60 MEAN 1.20 MAX 85 MIN 0 AC-FT 874
WTR YR 1973 TOTAL 1,247.90 MEAN 3.42 MAX 136 MIN 0 AC-FT 2,480

11090700 COYOTE CREEK AT LOS ALAMITOS, CALIF.

LOCATION.--Lat 33°48'38", long 118°04'28", in NW¼NE¼SW¼ sec.19, T.4 S., R.11 W., Orange County, on right bank about 250 ft downstream from Spring Street, 0.5 mile northwest of Los Alamitos.

DRAINAGE AREA.--136 sq mi.

PERIOD OF RECORD.--October 1963 to current year.

GAGE.--Water-stage recorder. Datum of gage is 7.37 ft above mean sea level (levels by Los Angeles County Flood Control District).

AVERAGE DISCHARGE.--10 years, 35.5 cfs (25,720 acre-ft per year).

EXTREMES.--Current year: Maximum discharge, 7,810 cfs Nov. 14 (gage height, 5.04 ft); minimum daily, 2.3 cfs Oct. 29.
Period of record: Maximum discharge, 11,300 cfs Jan. 20, 1969 (gage height, 6.38 ft); no flow Jan. 25, Feb. 15-17, 1964.

REMARKS.--Records poor. Flows up to 100 cfs can be diverted from present Carbon Creek channel to Coyote Creek through the original Carbon Creek channel. Flow partially regulated by Carbon Canyon, Brea and Fullerton flood-control reservoirs (combined capacity, 11,840 acre-ft). AVERAGE DISCHARGE represents flow to ocean during period of record, regardless of upstream development. See schematic diagram of San Gabriel and Los Angeles River basins.

COOPERATION.--Records furnished by Los Angeles County Flood Control District and reviewed by Geological Survey.

DISCHARGE, IN CUBIC FEET PER SECOND, WATER YEAR OCTOBER 1972 TO SEPTEMBER 1973

DAY	OCT	NOV	DEC	JAN	FEB	MAR	APR	MAY	JUN	JUL	AUG	SEP
1	7.3	3.4	10	5.6	5.6	10	5.2	5.1	11	11	7.4	4.3
2	7.6	3.7	10	5.6	4.8	8.6	4.6	5.1	6.8	8.8	4.6	4.6
3	7.4	4.3	10	6.3	575	6.3	4.6	5.1	5.5	9.4	4.9	5.5
4	6.2	3.7	873	9.3	243	11	7.4	5.1	5.5	10	4.6	4.3
5	5.5	4.6	32	8.6	31	5.6	5.5	5.0	6.2	6.8	5.5	8.1
6	4.9	4.4	15	6.3	959	133	5.2	5.0	8.1	6.2	6.2	5.2
7	4.9	6.3	509	4.4	1,330	99	5.2	5.0	5.5	7.4	10	5.5
8	6.2	35	180	7.0	44	589	6.2	5.0	5.5	10	6.8	6.8
9	5.5	3.7	12	395	16	25	6.8	5.0	4.6	9.4	6.8	8.1
10	4.9	6.7	7.8	130	37	17	4.6	5.0	4.3	10	7.4	6.8
11	4.6	658	7.0	7.8	2,350	344	5.2	5.0	4.9	8.1	7.4	7.4
12	4.6	6.3	6.3	4.8	446	89	4.9	4.9	5.2	8.8	9.4	6.8
13	5.5	3.3	5.6	4.4	875	20	5.5	4.9	5.2	9.4	11	8.8
14	4.6	987	4.4	4.4	32	17	5.5	4.9	5.5	8.8	8.8	12
15	5.5	17	4.0	4.8	24	15	5.5	4.9	5.2	7.4	8.8	11
16	4.3	1,410	4.4	1,360	19	11	7.4	5.2	5.2	5.5	10	11
17	4.0	705	4.4	304	16	10	6.2	4.9	6.2	6.2	10	16
18	40	27	5.6	627	11	11	8.1	5.2	5.2	8.8	9.4	19
19	661	20	5.6	317	7.0	10	6.2	6.2	6.8	4.6	9.4	20
20	314	18	3.3	12	6.3	526	4.0	6.8	6.2	4.3	8.8	20
21	4.3	12	6.3	6.3	6.3	104	4.3	6.8	6.8	4.9	6.2	24
22	3.4	11	7.8	6.3	5.6	116	4.9	7.4	5.5	4.6	4.9	27
23	3.4	9.3	8.6	4.8	7.0	7.4	4.3	8.8	6.2	5.5	5.2	28
24	3.1	9.3	7.8	4.8	5.6	4.9	5.5	8.8	5.2	5.2	4.9	22
25	3.4	9.3	9.3	4.8	5.6	4.6	5.5	6.8	5.5	4.9	5.5	19
26	3.7	12	11	7.8	6.3	5.5	5.5	7.4	6.2	4.6	5.5	11
27	3.7	9.3	6.3	4.8	32	3.7	5.2	7.4	7.4	5.2	4.9	5.5
28	3.1	8.6	4.8	4.0	778	4.3	5.2	7.4	8.1	4.9	4.6	4.9
29	2.3	8.6	4.0	3.7	------	4.6	5.2	10	8.8	5.2	4.3	4.3
30	3.1	9.3	3.7	380	------	5.2	5.1	10	9.4	5.5	4.3	3.4
31	2.8	------	4.4	10	------	5.5	------	8.1	------	6.2	3.4	------
TOTAL	1,144.8	4,026.1	1,783.4	3,661.6	7,878.1	2,223.2	164.5	192.2	187.7	217.6	210.9	340.3
MEAN	36.9	134	57.5	118	281	71.7	5.48	6.20	6.26	7.02	6.80	11.3
MAX	661	1,410	873	1,360	2,350	589	8.1	10	11	11	11	28
MIN	2.3	3.3	3.3	3.7	4.8	3.7	4.0	4.9	4.3	4.3	3.4	3.4
AC-FT	2,270	7,990	3,540	7,260	15,630	4,410	326	381	372	432	418	675

CAL YR 1972 TOTAL 9,060.3 MEAN 24.8 MAX 1,410 MIN 2.3 AC-FT 17,970
WTR YR 1973 TOTAL 22,030.4 MEAN 60.4 MAX 2,350 MIN 2.3 AC-FT 43,700

11092450 LOS ANGELES RIVER AT SEPULVEDA DAM, CALIF.

LOCATION.--Lat 34°09'42", long 118°27'57", in Ex Mission de San Fernando Grant, Los Angeles County, on right bank of outlet channel of Sepulveda Dam, 200 ft upstream from Sepulveda Boulevard in city of Los Angeles, and 1.8 miles southwest of Van Nuys.

DRAINAGE AREA.--158 sq mi.

PERIOD OF RECORD.--January 1929 to February 1938, May 1938 to current year. See WSP 1315-B, 1735 for history of records prior to September 1950.

GAGE.--Water-stage recorder. Datum of gage is 652.7 ft above mean sea level. See WSP 1735 for history of changes prior to Aug. 29, 1953.

AVERAGE DISCHARGE.--43 years (1929-37, 1938-73), 30.3 cfs (21,950 acre-ft per year).

EXTREMES.--Current year: Maximum discharge, 11,200 cfs Feb. 11 (gage height, 9.86 ft); minimum daily, 3.8 cfs Oct. 21.
Period of record: Maximum discharge, 13,800 cfs Jan. 25, 1969 (gage height, 11.42 ft); no flow Sept. 19, 20, 1930.
Flood of Mar. 2, 1938, amounted to 12,000 cfs (estimated).

REMARKS.--Records good. Flow regulated since December 1941 by Sepulveda flood-control reservoir (capacity, 17,400 acre-ft). Some diversion above station. At times city of Los Angeles discharges imported Owens River water into Los Angeles River from upstream distributing reservoirs. No discharges of imported water reported this year. See schematic diagram of San Gabriel and Los Angeles River basins.

COOPERATION.--Records of released water from reservoirs furnished by city of Los Angeles. Two discharge measurements furnished by Los Angeles County Flood Control District.

DISCHARGE, IN CUBIC FEET PER SECOND, WATER YEAR OCTOBER 1972 TO SEPTEMBER 1973

DAY	OCT	NOV	DEC	JAN	FEB	MAR	APR	MAY	JUN	JUL	AUG	SEP
1	8.5	8.2	7.3	7.3	6.8	36	12	13	14	11	11	11
2	7.9	8.3	7.8	8.4	6.6	25	10	13	13	10	7.8	10
3	6.9	8.2	7.4	9.3	490	22	10	13	14	11	5.4	11
4	6.9	18	564	9.5	523	21	9.7	14	14	12	5.6	11
5	6.6	14	13	8.9	266	19	10	15	16	12	5.0	7.8
6	6.9	8.1	24	10	1,380	117	13	14	16	13	5.6	8.5
7	6.9	7.6	176	12	822	48	15	16	17	12	5.3	9.3
8	6.1	7.4	50	12	42	570	12	17	14	12	5.6	8.2
9	5.3	7.9	8.0	230	23	46	12	15	12	14	6.5	7.8
10	6.2	9.9	5.6	48	1,090	22	14	14	12	15	7.6	8.2
11	6.7	301	5.0	9.9	4,410	309	13	14	13	14	7.0	7.7
12	5.9	9.1	8.3	9.8	679	135	12	13	13	13	6.7	7.5
13	4.4	6.9	9.1	9.4	782	33	11	13	13	13	8.1	8.3
14	4.7	956	7.4	9.5	90	24	11	13	12	12	5.6	8.4
15	13	40	7.2	9.4	57	18	11	14	14	11	6.4	13
16	4.7	650	7.3	1,820	45	15	11	15	14	12	6.4	9.9
17	7.8	155	7.4	89	33	14	13	15	16	14	6.7	8.2
18	5.9	13	8.5	2,070	29	12	13	15	16	13	6.9	10
19	19	11	8.5	116	24	12	12	15	16	14	7.1	8.7
20	7.3	9.8	8.5	18	18	798	11	15	15	13	7.8	7.6
21	3.8	8.6	7.9	12	13	237	11	15	15	12	7.9	7.5
22	5.3	6.1	8.5	8.0	12	64	12	15	15	12	7.4	7.3
23	5.4	4.8	8.2	7.4	14	27	12	16	13	13	6.4	6.7
24	5.3	7.1	8.3	6.9	30	22	14	14	11	14	7.2	6.5
25	5.4	6.9	7.1	6.5	23	20	15	13	12	14	7.4	6.0
26	7.2	7.3	8.0	5.8	18	20	16	13	13	15	7.7	4.9
27	8.1	9.0	9.2	5.9	624	20	14	14	11	13	8.0	5.1
28	7.2	7.6	9.3	5.5	395	18	12	17	12	13	11	64
29	7.2	6.9	8.3	7.2	------	13	11	15	13	13	10	58
30	6.4	6.5	8.4	22	------	13	13	16	13	13	10	9.7
31	7.5	------	8.4	7.2	------	13	------	13	------	14	10	------
TOTAL	216.4	2,320.2	1,031.9	4,610.8	11,945.4	2,763	365.7	447	412	397	227.1	357.8
MEAN	6.98	77.3	33.3	149	427	89.1	12.2	14.4	13.7	12.8	7.33	11.9
MAX	19	956	564	2,070	4,410	798	16	17	17	15	11	64
MIN	3.8	4.8	5.0	5.5	6.6	12	9.7	13	11	10	5.0	4.9
AC-FT	429	4,600	2,050	9,150	23,690	5,480	725	887	817	787	450	710

CAL YR 1972 TOTAL 6,321.5 MEAN 17.3 MAX 956 MIN 3.8 AC-FT 12,540
WTR YR 1973 TOTAL 25,094.3 MEAN 68.8 MAX 4,410 MIN 3.8 AC-FT 49,770

11093000 PACOIMA CREEK NEAR SAN FERNANDO, CALIF.

LOCATION.--Lat 34°20'07", long 118°23'50", in SE¼NE¼ sec.24, T.3 N., R.15 W., Los Angeles County, on right bank 500 ft downstream from Pacoima Dam, 0.3 mile upstream from mouth of canyon, and 4 miles northeast of San Fernando.

DRAINAGE AREA.--28.3 sq mi.

PERIOD OF RECORD.--March to July 1916 (fragmentary), December 1916 to current year.

GAGE.--Water-stage recorder. Flume or weir control since June 1937. Altitude of gage is 1,650 ft (from topographic map). See WSP 1735 for history of changes prior to Feb. 1, 1935.

AVERAGE DISCHARGE.--56 years (1917-73), 9.53 cfs (6,900 acre-ft per year).

EXTREMES.--Current year: Maximum discharge, 1,540 cfs Feb. 11 (gage height, 8.10 ft), from rating curve extended above 120 cfs; minimum daily, 0.10 cfs on many days.
Period of record: Maximum discharge, 2,440 cfs Mar. 3, 1938; no flow for several months in most years.

REMARKS.--Records poor. Flow regulated by Pacoima flood-control reservoir since February 1929 (capacity, 3,841 acre-ft). Flow passing over Pacoima Dam spillway enters creek below station. No diversion above station. See schematic diagram of San Gabriel and Los Angeles River basins.

COOPERATION.--Records furnished by Los Angeles County Flood Control District and reviewed by Geological Survey.

DISCHARGE, IN CUBIC FEET PER SECOND, WATER YEAR OCTOBER 1972 TO SEPTEMBER 1973

DAY	OCT	NOV	DEC	JAN	FEB	MAR	APR	MAY	JUN	JUL	AUG	SEP
1	.20	.20	.10	.10	.10	49	37	.10	.10	.10	.10	.10
2	.20	.20	.10	.10	.10	5.3	9.7	.10	.10	.10	.10	.10
3	.20	.20	.10	.10	.10	36	38	.10	.10	.10	.10	.10
4	.20	.20	.10	.10	.10	57	31	.10	.10	.10	.10	.10
5	.20	.20	.10	.10	.10	26	4.1	.10	.10	.10	.10	.10
6	.20	.20	.10	.10	.10	45	42	.10	.10	.10	.10	.10
7	.20	.20	.10	.10	.10	34	33	.10	.10	.10	.10	.10
8	.20	.20	.10	.10	.10	57	.10	30	.10	.10	.10	.10
9	.20	.20	.10	.10	3.6	25	34	62	.10	.10	.10	.10
10	.20	.20	.10	.10	26	59	30	77	.10	.10	.10	.10
11	.20	.10	.10	.10	680	46	7.7	32	.10	.10	.10	.10
12	.20	.10	.10	.10	187	61	43	.10	.10	.10	.10	.10
13	.20	.10	.10	.10	106	68	28	.10	.10	.10	.10	.10
14	.20	.10	.10	.10	67	42	11	.10	.10	.10	.10	.10
15	.20	.10	.10	.10	63	42	.10	.10	.10	.10	.10	.10
16	.20	.10	.10	.10	53	41	37	.10	.10	.10	.10	.10
17	.20	.10	.10	.10	39	65	33	.10	.10	.10	.10	.10
18	.20	.10	.10	.10	40	35	20	.10	.10	.10	.10	.10
19	.20	.10	.10	.10	40	33	28	.10	.10	.10	.10	.10
20	.20	.10	.10	.10	21	43	25	.10	.10	.10	.10	.10
21	.20	.10	.10	.10	12	50	14	.10	.10	.10	.10	.10
22	.20	.10	.10	.10	16	50	.10	.10	.10	.10	.10	.10
23	.20	.10	.10	.10	19	18	.10	36	.10	.10	.10	.10
24	.20	.10	.10	.10	19	30	.10	58	.10	.10	.10	.10
25	.20	.10	.10	.10	19	51	30	66	.10	.10	.10	.10
26	.20	.10	.10	.10	11	58	61	21	.10	.10	.10	.10
27	.20	.10	.10	.10	20	69	72	.10	.10	.10	.10	.10
28	.20	.10	.10	.10	103	50	.10	.10	.10	.10	.10	.10
29	.20	.10	.10	.10	------	48	.10	.10	.10	.10	.10	.10
30	.20	.10	.10	.10	------	29	.10	.10	.10	.10	.10	.10
31	.20	------	.10	.10	------	28	------	.10	------	.10	.10	------
TOTAL	6.20	4.00	3.10	3.10	1,545.40	1,350.3	669.30	384.30	3.00	3.10	3.10	3.00
MEAN	.20	.13	.10	.10	55.2	43.6	22.3	12.4	.10	.10	.10	.10
MAX	.20	.20	.10	.10	680	69	72	77	.10	.10	.10	.10
MIN	.20	.10	.10	.10	.10	5.3	.10	.10	.10	.10	.10	.10
AC-FT	12	7.9	6.1	6.1	3,070	2,680	1,330	762	6.0	6.1	6.1	6.0

CAL YR 1972 TOTAL 383.70 MEAN 1.05 MAX 54 MIN 0 AC-FT 761
WTR YR 1973 TOTAL 3,977.90 MEAN 10.9 MAX 680 MIN .10 AC-FT 7,890

NOTE.--No gage-height record Oct. 1 to Feb. 8, May 27 to Sept. 30.

11093490 NORTH FORK MILL CREEK NEAR LA CANADA, CALIF.

LOCATION.--Lat 34°19'03", long 118°08'00", (unsurveyed), Los Angeles County, Angeles National Forest, on right upstream end of culvert on Angeles Forest Highway, 0.2 mile west of Hidden Springs, and 8.8 miles northeast of La Canada.

DRAINAGE AREA.--5.80 sq mi.

PERIOD OF RECORD.--Water years 1960-66 (annual maximum), June 1966 to September 1973 (discontinued).

GAGE.--Water-stage recorder with rain-gage attachment and crest-stage gage. Altitude of gage is 3,060 ft (from topographic map). Crest-stage gage is at datum 4.66 ft higher.

AVERAGE DISCHARGE.--7 years, 1.93 cfs (1,400 acre-ft per year).

EXTREMES.--Current year: Maximum discharge, 116 cfs Feb. 11 (gage height, 4.35 ft); no flow many days.
Period of record: Maximum discharge, 1,280 cfs Jan. 25, 1969 (gage height, 17.3 ft, from floodmarks), from rating curve extended above 10 cfs on basis of computations of flow through culvert at gage-heights 4.00 ft, 9.4, and 17.3 ft; no flow at times in most years.

REMARKS.--Records poor. No regulation or diversion above station.

DISCHARGE, IN CUBIC FEET PER SECOND, WATER YEAR OCTOBER 1972 TO SEPTEMBER 1973

DAY	OCT	NOV	DEC	JAN	FEB	MAR	APR	MAY	JUN	JUL	AUG	SEP
1	0	0	.18	.12	.07	2.0	2.4	1.4	1.4	.18		
2	0	0	.15	.12	.07	1.4	2.2	1.2	1.4	.13		
3	0	0	.15	.15	.10	1.5	2.0	1.2	1.4	.11		
4	0	0	.49	.15	.11	1.7	1.8	1.2	1.2	.06		
5	0	0	.30	.15	.10	1.4	1.8	1.6	.98	.06		
6	0	0	.21	.15	1.0	1.6	1.8	1.6	.36	.06		
7	0	0	.36	.15	2.0	1.7	1.8	1.6	.30	.16		
8	0	0	.30	.15	.80	2.5	1.6	1.6	.25	.16		
9	0	0	.25	.21	.30	2.1	1.6	1.6	.18	.09		
10	0	0	.21	.15	6.0	2.0	1.4	1.6	.15	.05		
11	0	.71	.21	.12	38	4.5	1.2	1.6	.36	0		
12	0	.40	.18	.09	6.4	3.4	1.2	1.6	.18	0		
13	0	.30	.18	.09	5.2	2.9	1.4	1.4	.25	0		
14	0	1.5	.18	.09	4.3	2.8	1.4	1.4	.86	0		
15	0	.50	.18	.09	3.5	2.8	1.4	1.4	.86	.03		
16	0	2.0	.21	.25	3.0	2.4	1.2	1.2	.57	.04		
17	0	.70	.21	.30	2.7	2.4	1.2	1.2	.49	.04		
18	0	.45	.21	.18	2.3	2.2	1.2	1.2	.30	.02		
19	.01	.33	.18	.15	2.1	2.0	1.2	1.2	.30	.01		
20	0	.26	.18	.13	1.9	4.2	1.2	1.2	.25	0		
21	0	.23	.18	.11	1.8	3.5	1.1	1.2	.18	0		
22	0	.21	.18	.11	1.7	3.5	1.1	1.2	.36	.01		
23	0	.19	.18	.10	1.5	3.5	1.1	1.2	.36	0		
24	0	.19	.15	.09	1.4	3.2	1.1	1.2	.25	0		
25	0	.18	.15	.09	1.3	3.2	1.1	1.2	.21	0		
26	0	.18	.15	.08	1.2	3.2	1.1	1.2	.17	0		
27	0	.18	.15	.08	1.2	2.8	1.1	1.1	.13	0		
28	0	.18	.15	.08	4.5	2.8	1.2	.98	.14	0		
29	0	.18	.15	.08	------	2.4	1.4	.86	.12	0		
30	0	.18	.15	.07	------	2.4	1.4	.86	.10	0		
31	0	------	.15	.07	------	2.4	------	1.1	------	0		------
TOTAL	.01	9.05	6.26	3.95	94.55	80.4	42.7	40.10	14.06	1.21	0	0
MEAN	.0003	.30	.20	.13	3.38	2.59	1.42	1.29	.47	.039	0	0
MAX	.01	2.0	.49	.30	38	4.5	2.4	1.6	1.4	.18	0	0
MIN	0	0	.15	.07	.07	1.4	1.1	.86	.10	0	0	0
AC-FT	.02	18	12	7.8	188	159	85	80	28	2.4	0	0
(a)	0	1.2	1.0	.1	1.0	1.1	.1	0	0	0	0	0

CAL YR 1972 TOTAL 53.88 MEAN .15 MAX 2.0 MIN 0 AC-FT 107
WTR YR 1973 TOTAL 292.29 MEAN .80 MAX 38 MIN 0 AC-FT 580

a Precipitation, in inches.
NOTE.--No gage-height record Nov. 11-28, Jan. 19 to Feb. 10, Feb. 12 to Mar. 13.

11095500 TUJUNGA CREEK NEAR SUNLAND, CALIF.

LOCATION.--Lat 34°18'02", long 118°16'04", in SW¼NW¼SW¼ sec.32, T.3 N., R.13 W., Los Angeles County, on left bank 1,000 ft upstream from Gold Canyon, 2 miles upstream from mouth of canyon, and 4 miles northeast of Sunland.

DRAINAGE AREA.--106 sq mi.

PERIOD OF RECORD.--October 1916 to current year.

GAGE.--Water-stage recorder. Datum of gage is 1,571.80 ft above mean sea level (levels by Los Angeles County Flood Control District). Prior to Oct. 1, 1932, at site 1,000 ft upstream at different datum.

AVERAGE DISCHARGE.--56 years (1917-73), 29.1 cfs (21,080 acre-ft per year).

EXTREMES.--Current year: Maximum discharge, 1,840 cfs Feb. 11 (gage height, 8.85 ft); minimum daily, 0.30 cfs Aug. 3, 4.
Period of record: Maximum discharge, 50,000 cfs (estimated) Mar. 2, 1938; minimum, 0.10 cfs at times in some years.

REMARKS.--Records poor. Flow regulated since July 1931 by Big Tujunga flood-control reservoir (capacity, 3,819 acre-ft). Several small diversions above station for irrigation. See schematic diagram of San Gabriel and Los Angeles River basins.

COOPERATION.--Records furnished by Los Angeles County Flood Control District and reviewed by Geological Survey.

DISCHARGE, IN CUBIC FEET PER SECOND, WATER YEAR OCTOBER 1972 TO SEPTEMBER 1973

DAY	OCT	NOV	DEC	JAN	FEB	MAR	APR	MAY	JUN	JUL	AUG	SEP
1	5.3	6.6	2.0	2.0	3.5	45	66	34	7.1	3.6	1.3	77
2	5.3	6.6	2.8	2.0	3.5	26	64	9.7	7.5	3.2	.60	75
3	5.3	6.6	2.4	2.0	4.6	20	57	8.6	7.1	3.6	.30	74
4	5.3	6.6	10	2.0	4.6	18	50	8.1	6.6	3.2	.30	51
5	5.3	6.6	3.6	2.0	4.0	22	50	7.5	6.2	3.2	.60	14
6	4.6	6.6	3.2	2.0	29	69	50	7.5	5.4	3.2	1.3	12
7	4.6	6.6	10	2.0	76	71	50	7.5	4.1	3.2	1.3	11
8	4.6	6.6	5.3	2.0	26	92	50	7.1	3.2	3.2	1.3	9.7
9	4.6	6.6	4.6	2.0	17	122	51	6.6	3.2	2.9	30	9.2
10	4.6	7.2	4.0	2.0	74	92	51	7.1	4.1	2.9	75	9.2
11	4.6	11	4.0	2.0	970	47	36	7.1	4.1	2.9	78	9.7
12	4.6	7.8	4.0	2.0	493	86	13	7.5	6.2	2.9	78	9.7
13	4.6	7.8	4.0	2.0	264	151	13	7.5	6.6	3.2	67	9.7
14	5.3	16	4.0	2.0	213	155	13	8.1	6.6	3.6	70	14
15	5.3	10	4.0	2.0	176	133	13	7.5	7.5	3.6	70	12
16	5.9	25	4.0	4.1	184	131	13	7.1	7.5	3.6	69	12
17	5.9	16	3.6	19	220	131	13	6.6	7.5	3.2	67	11
18	5.9	9.1	3.6	57	224	131	12	6.6	7.1	2.9	67	12
19	11	6.6	3.6	37	216	131	12	6.6	5.8	3.2	67	12
20	7.2	5.3	3.6	3.5	149	130	12	7.1	4.1	2.9	75	11
21	6.6	8.7	3.2	3.5	34	85	12	7.1	3.6	2.9	85	11
22	6.6	5.3	2.8	3.5	20	33	11	7.1	3.2	3.6	91	11
23	5.9	4.0	2.8	3.5	18	29	10	7.5	2.9	3.2	94	11
24	5.3	4.0	2.4	3.5	18	27	10	7.1	2.9	2.9	85	11
25	4.6	4.0	2.4	3.5	18	25	9.7	7.1	2.6	2.9	85	11
26	4.0	4.6	2.0	3.5	18	24	24	6.6	2.2	2.6	82	11
27	4.0	4.6	2.0	3.5	26	30	48	5.8	2.2	2.2	78	12
28	4.0	3.2	2.0	3.5	64	66	49	5.8	2.2	1.9	78	12
29	4.0	3.2	2.0	3.5	------	66	50	6.6	2.9	1.9	77	12
30	5.9	2.0	2.0	3.5	------	64	50	7.5	2.9	1.9	77	12
31	6.6	------	2.0	3.5	------	64	------	7.5	------	1.9	77	------
TOTAL	167.3	224.8	111.9	189.1	3,567.2	2,316	962.7	251.1	145.1	92.1	1,729.00	569.2
MEAN	5.40	7.49	3.61	6.10	127	74.7	32.1	8.10	4.84	2.97	55.8	19.0
MAX	11	25	10	57	970	155	66	34	7.5	3.6	94	77
MIN	4.0	2.0	2.0	2.0	3.5	18	9.7	5.8	2.2	1.9	.30	9.2
AC-FT	332	446	222	375	7,080	4,590	1,910	498	288	183	3,430	1,130

CAL YR 1972 TOTAL 2,336.80 MEAN 6.38 MAX 121 MIN 2.0 AC-FT 4,640
WTR YR 1973 TOTAL 10,325.50 MEAN 28.3 MAX 970 MIN .30 AC-FT 20,480

11096500 LITTLE TUJUNGA CREEK NEAR SAN FERNANDO, CALIF.

LOCATION.--Lat 34°16'28", long 118°22'18", in Tujunga Grant, Los Angeles County, on downstream side of Foothill Boulevard bridge, 4 miles east of San Fernando.

DRAINAGE AREA.--21.1 sq mi.

PERIOD OF RECORD.--October 1928 to current year. Monthly discharge for April 1931, published in WSP 1315-B.

GAGE.--Water-stage recorder. Concrete control since May 1940. Datum of gage is 1,068.39 ft above mean sea level (levels by Los Angeles County Flood Control District). Prior to Nov. 30, 1964, at datum 0.5 ft lower.

AVERAGE DISCHARGE.--45 years, 2.51 cfs (1,820 acre-ft per year).

EXTREMES.--Current year: Maximum discharge, 1,570 cfs Feb. 11 (gage height, 5.22 ft); no flow most of year. Period of record: Maximum discharge, 8,500 cfs (estimated) Mar. 2, 1938; no flow for several months in each year.

REMARKS.--No regulation or diversion above station. See schematic diagram of San Gabriel and Los Angeles River basins.

COOPERATION.--Records furnished by Los Angeles County Flood Control District and reviewed by Geological Survey.

DISCHARGE, IN CUBIC FEET PER SECOND, WATER YEAR OCTOBER 1972 TO SEPTEMBER 1973

DAY	OCT	NOV	DEC	JAN	FEB	MAR	APR	MAY	JUN	JUL	AUG	SEP
1		0	0	0	0	5.4						
2		0	0	0	0	4.0						
3		0	0	0	0	1.2						
4		0	.20	0	0	.50						
5		0	0	0	.30	.20						
6		0	0	0	1.3	.50						
7		0	.20	0	9.9	.40						
8		0	0	0	.20	0						
9		0	0	0	0	0						
10		0	0	0	53	0						
11		0	0	0	477	.10						
12		0	0	0	35	.60						
13		0	0	0	30	.70						
14		.10	0	0	9.7	.40						
15		0	0	0	3.3	.10						
16		.70	0	4.6	.60	0						
17		0	0	1.1	.10	0						
18		0	0	17	0	0						
19		0	0	.80	0	0						
20		0	0	0	0	23						
21		0	0	0	0	23						
22		0	0	0	0	10						
23		0	0	0	0	3.0						
24		0	0	0	0	2.0						
25		0	0	0	0	.50						
26		0	0	0	0	.20						
27		0	0	0	15	.10						
28		0	0	0	46	0						
29		0	0	0	------	0						
30		0	0	0	------	0						
31		------	0	0	------	0	------		------			------
TOTAL	0	.80	.40	23.50	681.40	75.90	0	0	0	0	0	0
MEAN	0	.027	.013	.76	24.3	2.45	0	0	0	0	0	0
MAX	0	.70	.20	17	477	23	0	0	0	0	0	0
MIN	0	0	0	0	0	0	0	0	0	0	0	0
AC-FT	0	1.6	.8	47	1,350	151	0	0	0	0	0	0

CAL YR 1972 TOTAL 1.20 MEAN .003 MAX .70 MIN 0 AC-FT 2.4
WTR YR 1973 TOTAL 782.00 MEAN 2.14 MAX 477 MIN 0 AC-FT 1,550

11097000 TUJUNGA CREEK BELOW HANSEN DAM, CALIF.

LOCATION.--Lat 34°15'13", long 118°23'17", in Ex Mission San Fernando Grant, Los Angeles County, in city of Los Angeles, on left bank of outlet channel of Hansen Dam, 0.1 mile upstream from Glen Oaks Boulevard, and 3 miles southeast of San Fernando.

DRAINAGE AREA.--153 sq mi.

PERIOD OF RECORD.--May 1932 to February 1938, August 1940 to current year. Monthly discharge only for some periods, published in WSP 1315-B.

GAGE.--Water-stage recorder. Datum of gage is 943.32 ft above mean sea level (Corps of Engineers bench mark). See WSP 1735 for history of changes prior to Oct. 1, 1953.

EXTREMES.--Current year: Maximum discharge, 329 cfs Feb. 15 (gage height, 1.71 ft); no flow most of year.
Period of record: Maximum discharge, 11,700 cfs Feb. 25, 1969 (gage height, 7.36 ft), from rating curve extended above 5,000 cfs on basis of gate openings at dam; no flow for all or parts of each year.
Maximum discharge since May 1932, 54,000 cfs (estimated) Mar. 2, 1938.

REMARKS.--Records fair. Flow regulated since July 1931 by Big Tujunga flood-control reservoir (capacity, 4,240 acre-ft) and since September 1940 by Hansen flood-control reservoir (capacity, 29,700 acre-ft). Several small diversions for domestic use and irrigation. Water reported herein is that which passed Hansen Dam. Los Angeles County Flood Control District diverts 0.3 mile upstream from gage to spreading grounds. See schematic diagram of San Gabriel and Los Angeles River basins.

COOPERATION.--Records of diversion furnished by Los Angeles County Flood Control District.

DISCHARGE, IN CUBIC FEET PER SECOND, WATER YEAR OCTOBER 1972 TO SEPTEMBER 1973

DAY	OCT	NOV	DEC	JAN	FEB	MAR	APR	MAY	JUN	JUL	AUG	SEP
1		0	0	.03	0	0	0	0			0	0
2		0	0	.09	0	0	0	0			0	0
3		0	0	.09	.14	0	0	0			0	0
4		0	.50	.02	0	0	0	0			0	1.2
5		0	.14	.01	.14	0	0	0			0	1.9
6		0	.14	0	.14	0	0	0			0	1.4
7		0	.50	.01	1.9	0	0	22			0	0
8		0	.50	.05	0	1.9	0	28			0	0
9		0	.50	.50	0	4.0	1.9	0			0	0
10		0	.14	.35	2.9	.14	.50	0			0	0
11		.14	0	0	59	13	.50	0			0	0
12		.50	0	0	272	5.4	.50	0			0	0
13		.50	0	0	183	.14	2.9	0			.19	0
14		.50	0	0	93	0	0	0			.50	0
15		.50	0	0	83	0	0	0			.42	0
16		.50	0	.96	76	0	0	0			.50	0
17		.50	0	.50	83	0	0	0			.57	0
18		.50	0	1.6	78	0	0	0			0	0
19		.14	0	.50	68	0	0	0			0	0
20		.50	0	0	81	2.9	0	0			0	0
21		.50	0	0	104	.14	0	0			0	0
22		.50	0	0	101	.14	0	0			0	0
23		.50	0	0	63	0	0	0			0	0
24		.50	0	0	58	0	0	0			0	0
25		.50	0	0	51	0	0	0			0	0
26		.50	0	0	66	0	0	0			0	0
27		.50	0	0	22	0	0	0			.65	0
28		.50	0	0	0	0	0	0			.68	0
29		1.1	0	0	------	0	0	0			.50	0
30		.50	0	0	------	0	0	0			.44	0
31		------	0	0	------	0	------	0	------		.85	------
TOTAL	0	9.88	2.42	4.71	1,546.22	27.76	6.30	50	0	0	5.30	4.5
MEAN	0	.33	.078	.15	55.2	.90	.21	1.61	0	0	.17	.15
MAX	0	1.1	.50	1.6	272	13	2.9	28	0	0	.85	1.9
MIN	0	0	0	0	0	0	0	0	0	0	0	0
AC-FT	0	20	4.8	9.3	3,070	55	12	99	0	0	11	8.9
(a)	0	20	4.8	9.3	7,270	4,170	975	99	0	0	1,900	605

CAL YR 1972 TOTAL 12.30 MEAN .03 MAX 1.1 MIN 0 AC-FT 24.8 AC-FT a 24.8
WTR YR 1973 TOTAL 1,657.09 MEAN 4.54 MAX 272 MIN 0 AC-FT 3,290 AC-FT a 15,050

a Combined discharge, in acre-feet, of creek and diversion.

11097500 LOS ANGELES RIVER AT LOS ANGELES, CALIF.

LOCATION.--Lat 34°04'52", long 118°13'36", (landline location not available), Los Angeles County, on right bank near Figueroa Street, Los Angeles, and 800 ft upstream from Arroyo Seco.

DRAINAGE AREA.--514 sq mi.

PERIOD OF RECORD.--October 1929 to current year.

GAGE.--Water-stage recorder. Datum of gage is 292.58 ft above mean sea level (levels by Los Angeles County Flood Control District). See WSP 1315-B for history of changes prior to Dec. 8, 1939.

AVERAGE DISCHARGE.--44 years, 72.7 cfs (52,670 acre-ft per year).

EXTREMES.--Current year: Maximum discharge, 28,230 cfs Jan. 18 (gage height, 9.23 ft); minimum daily, 6.7 cfs Sept. 13.
Period of record: Maximum discharge, 67,000 cfs Mar. 2, 1938; no flow at times in some years.

REMARKS.--Flow regulated since September 1940 by Hansen flood-control reservoir and since December 1941 by Sepulveda flood-control reservoir (combined capacity, 49,400 acre-ft) and several small flood-control reservoirs. At times city of Los Angeles discharges imported Owens River water into Los Angeles River from upstream distributing reservoirs. Excess treated sewage effluent from Los Angeles Bureau of Sanitation is released to channel about 8 miles upstream. Many diversions above station for domestic use and irrigation. See schematic diagram of San Gabriel and Los Angeles River basins.

COOPERATION.--Records furnished by Los Angeles County Flood Control District and reviewed by Geological Survey.

DISCHARGE, IN CUBIC FEET PER SECOND, WATER YEAR OCTOBER 1972 TO SEPTEMBER 1973

DAY	OCT	NOV	DEC	JAN	FEB	MAR	APR	MAY	JUN	JUL	AUG	SEP
1	8.7	19	18	14	21	53	32	31	30	27	30	9.8
2	9.8	22	25	15	15	34	34	21	23	28	26	8.7
3	14	19	14	18	1,100	33	42	20	19	34	26	8.2
4	14	19	1,590	16	741	46	39	20	19	32	25	12
5	14	49	63	14	255	21	39	22	21	32	19	15
6	13	30	38	19	2,340	379	42	18	21	38	18	8.7
7	13	18	568	16	2,560	225	36	18	20	34	21	10
8	10	14	199	19	91	1,360	32	18	32	26	16	9.2
9	11	13	35	416	39	100	18	18	19	30	18	8.7
10	12	21	18	180	2,310	46	27	18	15	39	18	8.7
11	10	1,200	12	26	9,190	895	24	18	18	33	16	9.2
12	12	42	16	18	1,170	403	24	20	18	31	14	15
13	12	24	14	16	2,300	114	21	21	19	31	20	6.7
14	12	3,450	13	12	385	70	19	15	18	26	21	8.7
15	15	99	11	12	144	62	16	15	14	24	16	10
16	26	2,100	10	3,300	86	28	16	18	18	27	13	12
17	18	689	12	352	77	28	20	27	16	33	9.2	8.7
18	25	36	14	3,760	50	28	21	23	19	32	14	13
19	324	22	14	397	43	34	18	23	24	28	18	14
20	102	16	14	46	33	2,020	12	28	25	27	26	18
21	20	16	14	25	30	439	15	36	27	23	19	16
22	12	12	31	20	31	332	13	58	32	19	18	19
23	14	10	14	17	31	35	14	47	31	23	16	25
24	14	10	14	17	28	45	19	46	25	25	21	30
25	14	11	11	16	31	45	19	53	27	25	18	14
26	13	14	12	18	24	40	21	45	33	27	16	16
27	18	13	16	15	1,060	30	20	33	33	30	18	12
28	15	14	18	13	1,280	28	16	28	22	27	26	15
29	15	14	20	12	------	21	16	33	30	24	14	94
30	14	18	11	163	------	21	16	28	30	30	14	9.2
31	18	------	14	25	------	25	------	31	------	33	16	------
TOTAL	842.5	8,034	2,873	9,007	25,465	7,040	701	850	698	898	580.2	464.5
MEAN	27.2	268	92.7	291	909	227	23.4	27.4	23.3	29.0	18.7	15.5
MAX	324	3,450	1,590	3,760	9,190	2,020	42	58	33	39	30	94
MIN	8.7	10	10	12	15	21	12	15	14	19	9.2	6.7
AC-FT	1,670	15,940	5,700	17,870	50,510	13,960	1,390	1,690	1,380	1,780	1,150	921

CAL YR 1972 TOTAL 17,482.7 MEAN 47.8 MAX 3,450 MIN 5.4 AC-FT 34,680
WTR YR 1973 TOTAL 57,453.2 MEAN 157 MAX 9,190 MIN 6.7 AC-FT 114,000

11098000 ARROYO SECO NEAR PASADENA, CALIF.

LOCATION.--Lat 34°13'20", long 118°10'36", in NW¼NW¼NE¼ sec.31, T.2 N., R.12 W., Los Angeles County, on right bank 1.5 miles upstream from Millard Canyon, and 5.5 miles northwest of Pasadena.

DRAINAGE AREA.--16.0 sq mi.

PERIOD OF RECORD.--December 1910 to current year.

GAGE.--Water-stage recorder. Broad-crested weir since November 1938. Datum of gage is 1,397.88 ft above mean sea level. Prior to Oct. 1, 1916, nonrecording gage at different datum. Oct. 1, 1916, to Oct. 19, 1945, water-stage recorder at datum 4.00 ft lower.

AVERAGE DISCHARGE.--59 years (1913-15, 1916-73), 9.46 cfs (6,850 acre-ft per year).

EXTREMES.--Current year: Maximum discharge, 3,740 cfs Feb. 11 (gage height, 6.43 ft); minimum daily, 0.44 cfs Oct. 15.
Period of record: Maximum discharge, 8,620 cfs Mar. 2, 1938 (gage height, 9.42 ft, present datum), on basis of slope-area measurement of maximum flow; no flow at times in some years.

REMARKS.--Records good. Minor regulation by debris dam 1.5 miles upstream. No diversion above station. See schematic diagram of San Gabriel and Los Angeles River basins.

DISCHARGE, IN CUBIC FEET PER SECOND, WATER YEAR OCTOBER 1972 TO SEPTEMBER 1973

DAY	OCT	NOV	DEC	JAN	FEB	MAR	APR	MAY	JUN	JUL	AUG	SEP
1	.47	.65	1.5	1.7	3.3	26	20	10	9.9	3.0	1.5	1.6
2	.50	.65	1.5	1.6	3.1	25	19	9.3	9.0	3.0	1.5	1.6
3	.55	.60	1.6	1.7	4.6	28	18	9.2	7.7	2.8	1.5	1.5
4	.50	.65	14	1.7	5.2	30	17	9.1	7.5	2.7	1.5	1.6
5	.47	.65	7.6	1.6	4.6	24	17	9.4	6.8	2.7	1.6	1.4
6	.47	.60	4.4	1.5	34	27	16	9.6	6.0	2.6	1.6	1.4
7	.55	.65	10	1.6	101	32	16	9.4	5.4	2.6	1.6	1.4
8	.55	.65	7.0	1.8	37	44	15	9.2	5.0	2.6	1.5	1.4
9	.55	.65	5.2	1.7	15	36	14	8.7	4.7	2.5	1.5	1.4
10	.50	.70	4.0	1.7	95	35	14	8.6	4.7	2.4	1.4	1.4
11	.47	3.5	3.5	1.6	669	75	14	8.5	4.7	2.2	1.4	1.3
12	.47	1.8	2.8	1.5	111	66	13	8.6	4.7	2.4	1.4	1.3
13	.47	1.7	2.6	1.5	104	54	13	8.0	4.5	2.4	1.3	1.4
14	.47	7.9	2.5	1.6	64	48	13	7.3	4.9	2.5	1.3	1.3
15	.44	5.0	2.2	2.0	52	41	12	6.9	4.8	2.5	1.4	1.3
16	.47	14	2.1	6.8	43	37	12	6.3	4.7	2.4	1.4	1.3
17	.47	12	2.1	11	35	37	12	6.0	4.5	2.4	1.4	1.2
18	.50	4.8	2.0	71	30	34	11	4.8	4.4	2.3	1.4	1.2
19	.60	3.0	2.0	44	26	31	11	5.6	3.9	2.3	1.3	1.1
20	.55	2.4	2.0	11	25	61	11	5.7	3.7	2.3	1.4	1.2
21	.50	2.2	1.8	7.5	23	43	10	6.0	3.6	2.4	1.4	1.2
22	.50	2.0	1.8	6.8	23	41	10	5.5	3.1	2.4	1.4	1.3
23	.50	1.8	1.8	5.8	23	34	10	5.4	2.9	2.4	1.4	1.2
24	.55	1.8	1.8	5.1	17	31	11	5.2	2.8	2.1	1.5	1.2
25	.50	1.7	1.7	4.5	11	29	11	5.1	2.9	1.8	1.7	1.2
26	.60	1.6	1.6	4.4	9.1	28	10	5.0	2.9	1.7	1.8	1.1
27	.60	1.6	1.6	4.0	25	27	9.8	4.9	3.0	1.7	1.7	1.0
28	.60	1.6	1.6	3.8	77	26	10	4.5	3.0	1.5	1.7	.98
29	.55	1.6	1.6	3.5	------	24	11	5.8	3.1	1.5	1.7	.95
30	.55	1.6	1.7	3.7	------	22	11	8.8	3.1	1.4	1.7	.95
31	.60	------	1.8	3.7	------	22	------	9.3	------	1.4	1.7	------
TOTAL	16.07	80.05	99.4	221.4	1,669.9	1,118	391.8	225.7	141.9	70.9	46.6	38.38
MEAN	.52	2.67	3.21	7.14	59.6	36.1	13.1	7.28	4.73	2.29	1.50	1.28
MAX	.60	14	14	71	669	75	20	10	9.9	3.0	1.8	1.6
MIN	.44	.60	1.5	1.5	3.1	22	9.8	4.5	2.8	1.4	1.3	.95
AC-FT	32	159	197	439	3,310	2,220	777	448	281	141	92	76

CAL YR 1972 TOTAL 551.54 MEAN 1.51 MAX 14 MIN .19 AC-FT 1,090
WTR YR 1973 TOTAL 4,120.10 MEAN 11.3 MAX 669 MIN .44 AC-FT 8,170

PEAK DISCHARGE (BASE, 150 CFS)

DATE	TIME	G.H.	DISCHARGE	DATE	TIME	G.H.	DISCHARGE
1-18	1830	3.08	298	2-11	0230	6.43	3,740
2-7	0430	2.78	204	3-11	1045	2.62	150

11098500 LOS ANGELES RIVER NEAR DOWNEY, CALIF.

LOCATION.--Lat 33°56'58", long 118°10'23", in San Antonio Grant, Los Angeles County, on right bank 400 ft downstream from Firestone Boulevard bridge, 1 mile upstream from Rio Hondo, and 2.5 miles west of Downey.

DRAINAGE AREA.--599 sq mi.

PERIOD OF RECORD.--March 1928 to current year.

GAGE.--Water-stage recorder. Datum of gage is 96.12 ft above mean sea level (levels by Los Angeles County Flood Control District). See WSP 1735 for history of changes prior to Dec. 11, 1956.

AVERAGE DISCHARGE.--45 years, 111 cfs (80,420 acre-ft per year).

EXTREMES.--Current year: Maximum discharge, 49,000 cfs Jan. 18 (gage height, 8.33 ft); minimum daily, 13 cfs Oct. 9.
Period of record: Maximum discharge, 79,700 cfs Mar. 2, 1938, on basis of slope-area measurements; no flow at times in some years.

REMARKS.--Flow regulated since September 1940 by Hansen flood-control reservoir and since December 1941 by Sepulveda flood-control reservoir (combined capacity, 49,400 acre-ft) and several small flood-control reservoirs. City of Los Angeles stores imported Owens River water in San Fernando and Chatsworth Reservoirs and at times discharges imported water into Los Angeles River. Many diversions for domestic use and irrigation above station. See schematic diagram of San Gabriel and Los Angeles River basins.

COOPERATION.--Records furnished by Los Angeles County Flood Control District and reviewed by Geological Survey.

DISCHARGE, IN CUBIC FEET PER SECOND, WATER YEAR OCTOBER 1972 TO SEPTEMBER 1973

DAY	OCT	NOV	DEC	JAN	FEB	MAR	APR	MAY	JUN	JUL	AUG	SEP
1	20	18	19	17	31	161	46	54	27	34	42	21
2	20	21	28	19	27	208	42	36	24	31	39	17
3	24	20	16	22	1,430	187	50	39	24	37	39	16
4	20	21	2,580	21	697	264	50	40	25	35	40	18
5	20	44	86	19	130	120	54	42	31	34	39	24
6	19	35	33	21	3,340	384	56	37	35	40	37	21
7	17	28	1,010	19	4,420	480	54	39	31	37	39	21
8	15	25	213	22	158	1,710	46	48	39	32	34	22
9	13	23	48	386	70	194	32	36	31	35	32	20
10	15	28	23	196	2,480	56	40	36	25	40	32	20
11	15	1,080	19	31	14,500	973	40	35	27	44	31	21
12	15	42	23	27	1,660	350	39	31	27	68	26	23
13	17	22	21	24	3,220	188	37	35	32	63	27	25
14	15	2,800	20	19	699	150	36	28	32	65	37	21
15	15	106	19	19	425	142	35	31	32	58	31	22
16	25	1,920	18	5,560	170	97	35	34	32	70	27	24
17	19	713	18	547	180	65	42	44	26	68	21	24
18	29	42	22	5,750	130	65	39	32	28	39	23	27
19	205	24	22	583	116	63	35	31	31	42	25	24
20	141	19	19	70	81	2,790	31	30	27	42	36	20
21	24	18	22	34	42	892	31	34	30	39	28	19
22	15	15	47	31	46	473	26	48	31	32	24	19
23	15	15	23	27	48	83	28	37	31	36	23	20
24	19	15	22	27	40	65	36	31	26	39	24	24
25	17	15	18	27	46	56	35	37	30	39	25	19
26	17	16	21	28	39	85	36	32	37	36	21	16
27	23	16	25	26	1,240	63	37	27	42	35	19	18
28	17	18	24	26	2,210	54	35	28	30	35	23	15
29	16	17	26	25	------	39	34	35	42	31	22	84
30	15	19	18	297	------	37	32	31	37	32	21	22
31	18	------	18	40	------	36	------	30	------	39	23	------
TOTAL	875	7,195	4,521	13,960	37,675	10,530	1,169	1,108	922	1,307	910	687
MEAN	28.2	240	146	450	1,346	340	39.0	35.7	30.7	42.2	29.4	22.9
MAX	205	2,800	2,580	5,750	14,500	2,790	56	54	42	70	42	84
MIN	13	15	16	17	27	36	26	27	24	31	19	15
AC-FT	1,740	14,270	8,970	27,690	74,730	20,890	2,320	2,200	1,830	2,590	1,800	1,360

CAL YR 1972 TOTAL 20,515 MEAN 56.1 MAX 2,800 MIN 13 AC-FT 40,690
WTR YR 1973 TOTAL 80,859 MEAN 222 MAX 14,500 MIN 13 AC-FT 160,400

11101250 RIO HONDO ABOVE WHITTIER NARROWS DAM, CALIF.

LOCATION.--Lat 34°03'32", long 118°04'13", in Potrero Grande Grant, Los Angeles County, on right bank 0.3 mile downstream from Garvey Avenue, 0.4 mile downstream from Rubio Wash, and 2.2 miles west of El Monte.

DRAINAGE AREA.--91.2 sq mi.

PERIOD OF RECORD.--February 1956 to current year.

GAGE.--Water-stage recorder. Datum of gage is 217.8 ft above mean sea level.

AVERAGE DISCHARGE.--17 years, 32.6 cfs (23,620 acre-ft per year).

EXTREMES.--Current year: Maximum discharge, 11,400 cfs Feb. 27 (gage height, 5.65 ft); minimum daily, 0.62 cfs Dec. 28.
Period of record: Maximum discharge, 17,700 cfs Jan. 25, 1969 (gage height, 7.23 ft); no flow for some days in most years.

REMARKS.--Records good. Flow regulated by Big Santa Anita, Sawpit, and Eaton flood-control reservoirs (combined capacity, 1,700 acre-ft) and Sierra Madre, Las Flores, and Rubio debris basins. Many diversions above station for domestic use and irrigation. Los Angeles County Flood Control District diverted 9,410 acre-ft of water from San Gabriel River below Santa Fe Dam to Rio Hondo during current year. See schematic diagram of San Gabriel and Los Angeles River basins.

COOPERATION.--Records of diversion furnished by the Los Angeles County Flood Control District.

DISCHARGE, IN CUBIC FEET PER SECOND, WATER YEAR OCTOBER 1972 TO SEPTEMBER 1973

DAY	OCT	NOV	DEC	JAN	FEB	MAR	APR	MAY	JUN	JUL	AUG	SEP
1	3.4	1.9	2.2	.84	.94	34	.64	2.1	2.1	2.9	2.5	3.2
2	2.8	2.1	1.8	2.1	.91	44	1.3	2.5	1.7	2.9	3.2	3.0
3	1.4	2.6	1.7	2.3	275	26	4.1	2.9	1.9	2.9	3.0	2.6
4	2.3	1.9	577	4.6	23	31	16	2.7	2.2	2.5	2.9	2.8
5	2.1	2.0	2.9	6.4	55	53	2.3	2.9	2.7	2.9	2.8	2.3
6	2.8	2.4	17	8.2	4.1	297	2.1	1.7	3.4	3.4	2.6	3.1
7	3.1	2.2	205	10	1.7	126	1.7	2.7	3.8	3.3	2.5	3.0
8	3.9	3.5	28	13	430	467	1.2	2.3	3.1	3.2	2.4	2.9
9	2.6	2.3	1.2	19	350	64	35	2.3	2.9	3.6	2.3	2.9
10	2.2	11	1.1	4.6	61	123	72	2.3	2.5	3.7	2.2	2.8
11	2.2	277	1.4	1.4	50	779	75	2.7	2.5	3.7	2.2	2.1
12	2.5	1.5	2.3	1.7	75	167	68	1.9	2.7	4.1	2.1	2.6
13	2.5	1.6	1.2	1.7	130	93	61	2.1	2.7	4.1	2.3	3.3
14	1.7	483	3.3	1.9	124	66	55	2.3	2.9	3.3	2.1	1.6
15	1.3	3.6	1.4	1.7	114	26	42	2.7	2.9	2.8	2.5	1.7
16	1.8	479	1.7	872	119	50	29	3.1	2.9	3.6	2.3	2.9
17	2.0	121	1.8	8.8	135	105	15	2.1	2.9	4.3	2.1	2.1
18	2.2	1.6	1.9	739	162	104	1.7	2.3	2.9	4.5	1.9	1.6
19	52	1.5	2.0	15	97	101	1.9	2.1	2.9	6.3	1.9	1.4
20	4.1	2.0	1.9	18	28	557	2.5	2.3	2.9	7.1	2.4	1.8
21	1.2	1.8	1.7	2.5	24	144	1.7	3.1	2.9	7.1	2.2	2.0
22	1.1	1.6	1.5	4.0	61	6.5	1.7	1.7	2.9	8.3	2.1	1.5
23	1.5	.90	1.2	3.9	76	5.4	2.7	1.9	2.9	11	2.2	.95
24	2.1	.86	1.0	1.4	19	18	2.7	1.7	2.9	5.7	2.3	1.6
25	2.3	.99	.70	1.6	17	18	2.5	2.3	2.9	3.1	1.9	1.5
26	2.7	.87	.97	1.5	43	19	2.9	1.7	2.9	3.8	2.4	1.9
27	2.8	1.5	.84	1.4	819	18	3.6	1.9	2.9	3.5	2.0	2.9
28	1.7	2.0	.62	.99	335	9.1	2.1	1.9	2.9	3.0	1.6	2.4
29	1.4	2.0	1.4	1.5	------	1.9	1.7	2.7	2.9	2.8	2.4	2.9
30	.94	1.6	1.1	71	------	1.3	1.6	2.5	2.9	3.1	3.1	4.2
31	1.5	------	.97	.91	------	.96	------	2.1	------	3.2	3.5	------
TOTAL	118.14	1,417.82	868.80	1,822.94	3,629.65	3,555.16	510.64	71.5	83.5	129.7	73.9	71.55
MEAN	3.81	47.3	28.0	58.8	130	115	17.0	2.31	2.78	4.18	2.38	2.39
MAX	52	483	577	872	819	779	75	3.1	3.8	11	3.5	4.2
MIN	.94	.86	.62	.84	.91	.96	.64	1.7	1.7	2.5	1.6	.95
AC-FT	234	2,810	1,720	3,620	7,200	7,050	1,010	142	166	257	147	142

CAL YR 1972 TOTAL 3,316.99 MEAN 9.06 MAX 577 MIN .62 AC-FT 6,580
WTR YR 1973 TOTAL 12,353.30 MEAN 33.8 MAX 872 MIN .62 AC-FT 24,500

11101500 RIO HONDO NEAR MONTEBELLO, CALIF.

LOCATION.--Lat 34°02'00", long 118°04'22", in Potrero Grande Grant, Los Angeles County, on right bank 900 ft upstream from Mission bridge, and 2 miles northeast of Montebello.

DRAINAGE AREA.--116 sq mi (excludes area above Santa Fe Dam).

PERIOD OF RECORD.--October 1928 to current year.

GAGE.--Water-stage recorder. Datum of gage is 190.77 ft above mean sea level (levels by Los Angeles County Flood Control District). See WSP 1735 for history of changes prior to September 1962.

AVERAGE DISCHARGE.--29 years (1928-57), 51.5 cfs (37,280 acre-ft per year).

EXTREMES.--Current year: Maximum discharge, 10,910 cfs Feb. 11 (gage height, 10.75 ft); minimum daily, 2.1 cfs Oct. 10-13.
Period of record: Maximum discharge, 28,000 cfs Mar. 2, 1938 (gage height, 16.69 ft, present datum), from rating curve extended above 9,000 cfs on basis of slope-area measurement and runoff from contributing stream; no flow for some days in 1964-65.

REMARKS.--Flow regulated by Big Santa Anita, Sawpit, and Eaton flood-control reservoirs (combined capacity, 1,700 acre-ft) and Sierra Madre, Las Flores, and Rubio debris basins. Many diversions above station for domestic use and irrigation. At times flow is diverted from San Gabriel River below Santa Fe Dam to Rio Hondo above station. Since 1957, with the exception of 1972, imported Colorado River water has been released to Rio Hondo 1.6 miles above station for ground-water recharge. See schematic diagram of San Gabriel and Los Angeles River basins.

COOPERATION.--Records furnished by Los Angeles County Flood Control District and reviewed by Geological Survey.

DISCHARGE, IN CUBIC FEET PER SECOND, WATER YEAR OCTOBER 1972 TO SEPTEMBER 1973

DAY	OCT	NOV	DEC	JAN	FEB	MAR	APR	MAY	JUN	JUL	AUG	SEP
1	3.1	2.6	3.1	3.2	5.0	34	15	4.6	6.3	5.7	6.0	5.5
2	2.9	2.7	3.1	3.2	5.0	40	12	4.6	6.3	5.7	6.3	5.5
3	2.7	2.9	3.1	3.2	261	24	10	4.6	6.3	5.5	6.6	5.5
4	2.6	3.0	619	3.2	22	28	16	4.8	7.2	5.2	6.3	5.7
5	2.6	3.1	10	3.2	43	49	9.4	5.0	9.0	5.0	6.3	5.5
6	2.5	3.2	5.0	3.2	536	301	9.1	5.2	174	5.7	5.5	5.2
7	2.4	3.5	235	3.2	955	135	9.4	5.5	232	5.7	5.7	5.5
8	2.3	3.7	38	3.2	15	494	9.4	5.7	223	6.0	5.7	5.2
9	2.2	3.7	5.0	67	10	68	43	5.7	217	6.3	5.7	5.2
10	2.1	3.7	4.0	15	399	120	103	5.7	211	6.6	5.7	5.5
11	2.1	324	4.0	5.5	2,150	674	92	6.0	205	6.6	5.7	5.7
12	2.1	10	3.0	5.4	681	200	71	5.7	205	6.8	5.7	5.7
13	2.1	5.0	3.0	5.3	412	115	60	5.7	205	6.8	5.7	6.0
14	2.2	572	3.1	5.2	86	89	49	5.5	208	6.8	5.5	5.7
15	2.2	10	3.2	5.0	66	25	35	5.0	166	6.6	5.7	5.5
16	2.3	525	3.3	1,190	72	33	22	4.8	64	6.3	6.0	5.7
17	2.3	167	3.4	45	151	124	11	4.8	59	6.3	6.0	6.0
18	2.3	7.0	3.5	789	140	124	6.0	4.8	59	6.0	6.0	6.3
19	68	6.0	3.6	75	137	128	6.0	4.8	59	6.0	5.7	6.0
20	5.0	5.0	3.7	5.0	148	553	6.0	5.0	60	6.0	5.7	4.2
21	4.7	4.2	3.7	4.5	129	206	5.7	4.8	25	6.0	6.0	3.9
22	4.3	3.5	3.6	4.2	178	28	5.5	4.8	6.0	6.0	5.7	3.9
23	4.0	3.4	3.6	4.0	128	28	5.7	4.8	5.7	6.3	5.7	3.9
24	3.6	3.4	3.5	4.0	30	30	5.5	4.8	5.5	5.7	5.7	3.7
25	3.3	3.3	3.5	3.9	30	31	5.0	4.8	5.7	6.0	5.5	4.6
26	3.2	3.3	3.4	3.9	40	30	5.0	5.2	6.0	6.0	5.5	4.4
27	3.1	3.2	3.4	3.9	703	32	4.8	5.5	6.0	6.0	5.7	5.0
28	3.0	3.2	3.4	3.9	436	32	5.0	5.7	6.8	6.0	5.7	5.0
29	2.9	3.1	3.3	3.9	------	24	4.6	5.7	6.8	5.7	5.7	4.6
30	2.8	3.1	3.3	78	------	21	4.6	6.0	6.3	5.7	5.5	4.8
31	2.7	------	3.3	5.7	------	18	------	6.3	------	6.0	5.5	------
TOTAL	153.6	1,696.8	997.1	2,357.9	7,968.0	3,838	645.7	161.9	2,461.9	187.0	179.7	154.9
MEAN	4.95	56.6	32.2	76.1	285	124	21.5	5.22	82.1	6.03	5.80	5.16
MAX	68	572	619	1,190	2,150	674	103	6.3	232	6.8	6.6	6.3
MIN	2.1	2.6	3.0	3.2	5.0	18	4.6	4.6	5.5	5.0	5.5	3.7
AC-FT	305	3,370	1,980	4,680	15,800	7,610	1,280	321	4,880	371	356	307

CAL YR 1972 TOTAL 4,107.5 MEAN 11.2 MAX 619 MIN 2.0 AC-FT 8,150
WTR YR 1973 TOTAL 20,802.5 MEAN 57.0 MAX 2,150 MIN 2.1 AC-FT 41,260

11102000 MISSION CREEK NEAR MONTEBELLO, CALIF.

LOCATION.--Lat 34°01'45", long 118°04'07", in La Merced Grant, Los Angeles County, on upstream side of right abutment of San Gabriel Boulevard bridge, 2 miles northeast of Montebello.

DRAINAGE AREA.--4.16 sq mi.

PERIOD OF RECORD.--October 1929 to current year. Yearly estimate for 1938, published in WSP 1315-B. Prior to October 1944, published as Rio Hondo Slough near Montebello.

GAGE.--Water-stage recorder. Datum of gage is 188.2 ft above mean sea level. Prior to Nov. 3, 1938, at datum 6.30 ft higher.

AVERAGE DISCHARGE.--44 years, 10.9 cfs (7,900 acre-ft per year).

EXTREMES.--Current year: Maximum discharge, about 12 cfs Feb. 11 (gage height, unknown); no flow most of year. Period of record: Maximum discharge not determined, occurred Mar. 2, 1938; no flow at times in some years.

REMARKS.--Flow is almost entirely from ground-water seepage. Flow partially regulated above station by Legg Lake. No diversion above station. See schematic diagram of San Gabriel and Los Angeles River basins.

COOPERATION.--Records furnished by Los Angeles County Flood Control District and reviewed by Geological Survey.

DISCHARGE, IN CUBIC FEET PER SECOND, WATER YEAR OCTOBER 1972 TO SEPTEMBER 1973

DAY	OCT	NOV	DEC	JAN	FEB	MAR	APR	MAY	JUN	JUL	AUG	SEP
1					0	0						
2					0	0						
3					0	0						
4					0	0						
5					.20	0						
6					2.5	0						
7					2.6	0						
8					.80	0						
9					.60	0						
10					.60	0						
11					5.1	.10						
12					3.0	.10						
13					1.2	.10						
14					.20	.10						
15					.10	.10						
16					.10	0						
17					.10	0						
18					.10	0						
19					.10	0						
20					.10	.10						
21					.10	.10						
22					.10	.10						
23					0	.10						
24					0	.10						
25					0	.10						
26					0	.10						
27					0	.10						
28					.40	.10						
29					------	.10						
30					------	0						
31		------			------	0	------		------			------
TOTAL	0	0	0	0	18.00	1.50	0	0	0	0	0	0
MEAN	0	0	0	0	.64	.048	0	0	0	0	0	0
MAX	0	0	0	0	5.1	.10	0	0	0	0	0	0
MIN	0	0	0	0	0	0	0	0	0	0	0	0
AC-FT	0	0	0	0	36	3.0	0	0	0	0	0	0

CAL YR 1972 TOTAL 102.02 MEAN .28 MAX 1.6 MIN 0 AC-FT 202
WTR YR 1973 TOTAL 19.50 MEAN .053 MAX 5.1 MIN 0 AC-FT 39

11102300 RIO HONDO BELOW WHITTIER NARROWS DAM, CALIF.

LOCATION.--Lat 34°01'00", long 118°05'15", in Paso de Bartolo Grant, Los Angeles County, on right levee 0.2 mile upstream from Beverly Boulevard, 0.4 mile downstream from axis of Whittier Narrows Dam, and 1.0 mile northeast of Montebello.

DRAINAGE AREA.--124 sq mi.

PERIOD OF RECORD.--October 1966 to current year.

GAGE.--Water-stage recorder. Altitude of gage is 175 ft (from topographic map).

EXTREMES.--Current year: Maximum discharge, 13,800 cfs Feb. 11 (gage height, 7.84 ft); no flow many days. Period of record: Maximum discharge, 38,800 cfs Jan. 25, 1969 (gage height, 13.82 ft), from rating curve extended above 15,000 cfs on basis of gate openings at dam at gage heights 12.32 and 13.82 ft; no flow at times in each year.

REMARKS.--Records fair. Flow regulated by Whittier Narrows flood-control reservoir (capacity, 36,160 acre-ft). There are several small flood-control reservoirs (combined capacities, 1,700 acre-ft) and several small debris basins above Whittier Narrows Dam. Many diversions for domestic use and irrigation. At times flow is diverted from San Gabriel River to Rio Hondo from sites below Santa Fe Dam and above Whittier Narrows Dam. See schematic diagram of San Gabriel and Los Angeles River basins.

DISCHARGE, IN CUBIC FEET PER SECOND, WATER YEAR OCTOBER 1972 TO SEPTEMBER 1973

DAY	OCT	NOV	DEC	JAN	FEB	MAR	APR	MAY	JUN	JUL	AUG	SEP
1	0	0	63	134	143	111	5.1	135	137	130	131	1.3
2	0	0	76	133	148	44	5.5	140	137	140	134	1.3
3	0	2.7	121	142	339	30	6.8	147	137	134	133	1.3
4	0	16	464	140	87	34	15	151	137	127	132	1.3
5	0	18	198	138	66	30	12	136	18	114	136	.65
6	0	16	35	136	658	298	18	135	0	109	137	.61
7	0	18	233	136	995	178	30	136	0	113	142	1.3
8	0	21	61	102	320	456	47	137	0	118	147	.93
9	0	20	29	84	57	116	63	137	0	122	148	1.2
10	0	19	27	57	267	111	111	138	0	124	156	1.3
11	0	246	29	34	3,000	570	126	139	0	128	144	.91
12	0	35	126	43	655	343	121	140	0	122	136	0
13	0	29	131	134	802	81	81	140	0	135	138	0
14	0	215	131	136	305	63	76	140	0	137	136	0
15	0	169	126	136	131	30	96	142	15	134	132	.32
16	0	543	131	1,300	71	84	81	142	136	125	135	0
17	6.4	188	136	551	160	95	44	141	136	133	134	0
18	13	31	131	557	148	91	6.8	141	135	125	136	0
19	35	35	131	609	136	91	5.2	142	133	132	132	0
20	34	36	136	81	136	493	51	141	120	134	129	0
21	20	21	131	51	166	255	121	141	111	138	134	0
22	19	19	131	47	212	103	101	143	44	138	138	0
23	20	24	131	47	131	22	111	143	79	137	136	0
24	19	26	131	44	44	28	106	45	135	142	132	0
25	19	53	131	47	24	28	131	78	136	135	133	.03
26	17	58	131	44	63	34	134	137	123	90	135	69
27	17	55	127	47	262	36	135	136	111	14	134	114
28	19	59	128	47	887	31	132	135	109	6.8	143	113
29	20	63	136	47	------	17	131	135	110	10	129	108
30	18	63	136	101	------	19	131	135	110	57	79	106
31	9.6	------	136	74	------	11	------	140	------	116	17	------
TOTAL	286.0	2,098.7	3,964	5,379	10,413	3,933	2,234.4	4,168	2,309	3,519.8	4,058	522.45
MEAN	9.23	70.0	128	174	372	127	74.5	134	77.0	114	131	17.4
MAX	35	543	464	1,300	3,000	570	135	151	137	142	156	114
MIN	0	0	27	34	24	11	5.1	45	0	6.8	17	0
AC-FT	567	4,160	7,860	10,670	20,650	7,800	4,430	8,270	4,580	6,980	8,050	1,040

CAL YR 1972 TOTAL 12,042.05 MEAN 32.9 MAX 543 MIN 0 AC-FT 23,890
WTR YR 1973 TOTAL 42,885.35 MEAN 117 MAX 3,000 MIN 0 AC-FT 85,060

NOTE.--No gage-height record May 2 to July 2.

11102500 RIO HONDO NEAR DOWNEY, CALIF.

LOCATION.--Lat 33°56'48", long 118°09'43", in San Antonio Grant, Los Angeles County, on left bank 700 ft upstream from Stewart and Gray Road bridge, 1.0 mile upstream from mouth, and 1.5 miles west of Downey.

DRAINAGE AREA.--143 sq mi (excludes area above Santa Fe Dam).

PERIOD OF RECORD.--March 1928 to current year.

GAGE.--Water-stage recorder. Datum of gage is 91.4 ft above mean sea level (levels by Los Angeles County Flood Control District). Prior to Oct. 31, 1951, at site 700 ft downstream at datum 1.5 ft lower.

EXTREMES.--Current year: Maximum discharge, 15,200 cfs Feb. 11 (gage height, 8.10 ft); no flow many days. Period of record: Maximum discharge, 46,900 cfs Jan. 25, 1969 (gage height, 15.15 ft); no flow at times in most years.

REMARKS.--Flow regulated since January 1956 by Whittier Narrows flood-control reservoir (capacity, 36,160 acre-ft). There are several small flood-control reservoirs (combined capacity, 1,700 acre-ft) and several debris basins above Whittier Narrows Dam. Many diversions above station for domestic use and irrigation. At times flow is diverted from San Gabriel River below Santa Fe Dam and above Whittier Narrows Dam to Rio Hondo above station. Since 1937 much of the flow in Rio Hondo has been diverted to percolation basin from a site 5.5 miles upstream. See schematic diagram of San Gabriel and Los Angeles River basins.

COOPERATION.--Records furnished by Los Angeles County Flood Control District and reviewed by Geological Survey.

DISCHARGE, IN CUBIC FEET PER SECOND, WATER YEAR OCTOBER 1972 TO SEPTEMBER 1973

DAY	OCT	NOV	DEC	JAN	FEB	MAR	APR	MAY	JUN	JUL	AUG	SEP
1	.10	.20	.20	0	1.0	1.4	.10	.80	.80	.10	0	0
2	0	.10	.20	0	.60	1.4	.30	.60	.80	.10	0	0
3	.10	.10	.30	.30	72	.80	.30	.40	.60	0	0	.10
4	.10	.20	231	.80	7.5	1.6	.40	.80	.10	0	0	.40
5	0	.20	1.8	.40	13	.60	.40	.60	.10	0	.10	.40
6	.10	.20	5.1	.40	117	51	1.0	.60	0	0	0	.40
7	.30	3.4	118	.60	717	1.6	1.0	.40	.10	.10	.30	.30
8	.20	4.2	22	1.0	4.5	86	.60	.80	.10	.80	.30	.30
9	.10	.10	.40	48	2.6	1.6	1.0	.60	.60	.60	.10	.30
10	.20	1.5	0	2.6	45	1.0	.80	.60	.40	.60	.40	.80
11	.20	60	0	.30	2,550	147	.80	.40	.30	.60	.10	1.0
12	.70	.10	0	.30	119	26	.80	.60	.60	.80	0	.40
13	.20	.10	0	.40	352	1.6	1.0	.60	.60	.80	0	.60
14	.20	328	0	.40	2.6	.80	.60	.60	.60	.30	.10	.80
15	.30	6.1	0	.60	2.0	.60	1.0	.60	.40	.10	.10	.40
16	.30	205	0	1,280	1.8	.60	1.4	.60	.60	.10	.10	.40
17	.30	88	0	23	1.4	.60	1.4	.40	.60	.10	.30	.30
18	.90	3.4	.10	535	1.2	.40	.80	.10	.40	.10	.60	.30
19	2.6	2.8	.30	14	1.0	.60	1.2	0	.40	0	.30	0
20	2.4	2.4	.40	1.2	.60	80	.80	0	.10	0	.30	0
21	.20	1.5	.60	1.2	.60	90	.80	0	.40	0	.60	0
22	.20	.20	.60	1.2	.60	9.3	.80	0	.40	0	.30	0
23	.20	.10	.60	.80	.30	1.0	.80	0	.60	0	.10	0
24	.30	.10	.60	.80	.10	.60	1.4	0	.40	.10	.10	0
25	.30	0	.30	1.6	0	.60	1.2	0	.60	.30	.30	0
26	.20	.10	.10	1.2	.30	1.0	1.2	.10	.60	.60	.10	0
27	.50	.10	.10	.40	91	.60	1.2	.40	.80	.60	.10	0
28	.20	.10	.10	.40	240	1.0	1.2	.40	.80	.10	.10	0
29	.20	.20	0	.40	------	.10	1.0	.60	.30	0	.10	0
30	0	.10	0	49	------	.40	1.0	.80	.10	0	0	0
31	0	------	0	1.2	------	.60	------	.80	------	0	0	------
TOTAL	11.60	708.60	382.80	1,967.50	4,344.70	510.40	26.30	13.20	13.20	6.90	4.90	7.20
MEAN	.37	23.6	12.3	63.5	155	16.5	.88	.43	.44	.22	.16	.24
MAX	2.6	328	231	1,280	2,550	147	1.4	.80	.80	.80	.60	1.0
MIN	0	0	0	0	0	.10	.10	0	0	0	0	0
AC-FT	23	1,410	759	3,900	8,620	1,010	52	26	26	14	9.7	14

CAL YR 1972 TOTAL 1,503.73 MEAN 4.11 MAX 328 MIN 0 AC-FT 2,980
WTR YR 1973 TOTAL 7,997.30 MEAN 21.9 MAX 2,550 MIN 0 AC-FT 15,860

11103000 LOS ANGELES RIVER AT LONG BEACH, CALIF.

LOCATION.--Lat 33°49'02", long 118°12'20", in Los Cerritos Grant, Los Angeles County, on right bank 5,000 ft upstream from Willow Street, 3.4 miles north of Long Beach, and 3.7 miles upstream from mouth.

DRAINAGE AREA.--832 sq mi.

PERIOD OF RECORD.--December 1928 to current year.

GAGE.--Water-stage recorder. Datum of gage is 11.91 ft above mean sea level (levels by Los Angeles County Flood Control District). See WSP 1735 for history of changes prior to Jan. 19, 1956.

AVERAGE DISCHARGE.--44 years (1929-73), 167 cfs (121,000 acre-ft per year).

EXTREMES.--Current year: Maximum discharge, 50,800 cfs Feb. 11 (gage height, 10.69 ft); minimum daily, 20 cfs Dec. 26, 31.
Period of record: Maximum discharge, 102,000 cfs Jan. 25, 1969 (gage height, 16.00 ft); no flow at times in 1929-30, 1934.

REMARKS.--Flow regulated since September 1940 by Hansen flood-control reservoir and since December 1941 by Sepulveda flood-control reservoir (combined capacity, 49,400 acre-ft), and several small flood-control reservoirs. City of Los Angeles stores imported Owens River water in San Fernando and Chatsworth reservoirs and at times discharges imported water into Los Angeles River above station. Many diversions above station for domestic use and irrigation. AVERAGE DISCHARGE represents flow to the ocean, regardless of upstream development. See schematic diagram of San Gabriel and Los Angeles River basins.

COOPERATION.--Records furnished by Los Angeles County Flood Control District and reviewed by Geological Survey.

DISCHARGE, IN CUBIC FEET PER SECOND, WATER YEAR OCTOBER 1972 TO SEPTEMBER 1973

DAY	OCT	NOV	DEC	JAN	FEB	MAR	APR	MAY	JUN	JUL	AUG	SEP
1	28	25	29	21	37	142	53	46	40	40	36	30
2	26	31	38	22	26	64	55	38	36	36	45	24
3	31	30	26	27	1,320	50	62	42	33	41	46	22
4	29	31	2,720	28	850	81	61	42	33	41	45	24
5	29	48	246	28	150	49	61	49	36	38	38	36
6	29	40	42	25	3,320	729	67	41	41	46	35	35
7	32	34	1,690	26	5,140	496	67	41	39	44	42	31
8	29	114	427	26	245	1,800	55	38	51	34	42	34
9	25	28	111	682	82	350	45	39	39	35	42	28
10	30	34	33	374	1,630	73	54	40	32	44	44	26
11	29	1,490	29	37	16,200	1,170	58	40	30	54	46	29
12	28	112	33	33	1,630	661	54	44	34	62	35	32
13	32	47	33	29	3,410	281	54	48	35	57	35	39
14	29	3,140	32	22	676	144	45	37	37	55	53	33
15	27	237	30	22	569	144	39	36	35	46	49	32
16	35	3,300	29	6,030	200	109	44	37	33	49	40	32
17	31	1,630	27	1,830	162	71	50	36	31	62	36	28
18	31	117	30	4,930	142	71	45	35	34	49	34	33
19	295	42	32	1,070	124	75	34	40	45	44	35	31
20	328	36	32	108	104	2,370	22	36	39	48	44	28
21	36	34	31	53	71	692	21	38	44	42	41	28
22	24	30	45	62	71	737	26	45	46	33	35	28
23	24	27	30	51	68	91	25	39	60	37	35	28
24	25	24	26	51	61	75	34	36	48	44	35	33
25	25	25	22	48	58	68	32	37	44	44	39	30
26	24	26	20	48	49	105	33	39	57	48	32	24
27	30	26	25	44	544	55	44	27	57	49	27	28
28	27	28	29	35	2,880	54	45	28	39	44	32	21
29	24	27	30	33	------	48	41	28	49	36	32	77
30	22	29	23	584	------	50	35	28	46	39	26	44
31	24	------	20	84	------	53	------	38	------	36	30	------
TOTAL	1,441	10,842	5,970	16,463	39,819	10,958	1,361	1,188	1,223	1,377	1,186	948
MEAN	46.5	361	193	531	1,422	353	45.4	38.3	40.8	44.4	38.3	31.6
MAX	328	3,300	2,720	6,030	16,200	2,370	67	49	60	62	53	77
MIN	22	24	20	21	26	48	21	27	30	33	26	21
AC-FT	2,860	21,510	11,840	32,650	78,980	21,740	2,700	2,360	2,430	2,730	2,350	1,880

CAL YR 1972 TOTAL 28,747 MEAN 78.5 MAX 3,300 MIN 17 AC-FT 57,020
WTR YR 1973 TOTAL 92,776 MEAN 254 MAX 16,200 MIN 20 AC-FT 184,000

11103500 BALLONA CREEK NEAR CULVER CITY, CALIF.

LOCATION.--Lat 33°59'54", long 118°24'05", in La Ballona Grant, Los Angeles County, 500 ft upstream from Sawtelle Boulevard bridge, 1.7 miles south of Culver City, and 4.1 miles upstream from mouth.

DRAINAGE AREA.--89.5 sq mi, excludes that of Sepulveda Creek. Prior to January 1951, 111 sq mi, change due to tributary channel realignment.

PERIOD OF RECORD.--February 1928 to current year (after December 1950, flow of Sepulveda Creek excluded).

GAGE.--Water-stage recorder. Datum of gage is 11.98 ft above mean sea level (levels by Los Angeles County Flood Control District). Prior to May 14, 1936, at site 1 mile downstream at different datum. May 14, 1936, to Oct. 3, 1961, at datum 0.72 ft lower and Oct. 24, 1961, to Aug. 10, 1967, at datum 0.92 ft lower at site 500 ft downstream.

AVERAGE DISCHARGE.--22 years (1928-50), 35.2 cfs (25,480 acre-ft per year); 23 years (1950-73), 44.2 cfs (32,020 acre-ft per year).

EXTREMES.--Current year: Maximum discharge, 17,600 cfs Jan. 16 (gage height, 11.28 ft); minimum daily, 8.8 cfs Nov. 19, Dec. 10.
Period of record: Maximum discharge, 32,500 cfs Nov. 21, 1967 (gage height, 14.89 ft); no flow at times in some years.

REMARKS.--No regulation above station. At times city of Los Angeles discharges imported Owens River water from several distribution reservoirs into the creek above station. Some small pumping diversions above station for irrigation.

COOPERATION.--Records furnished by Los Angeles County Flood Control District and reviewed by Geological Survey.

DISCHARGE, IN CUBIC FEET PER SECOND, WATER YEAR OCTOBER 1972 TO SEPTEMBER 1973

DAY	OCT	NOV	DEC	JAN	FEB	MAR	APR	MAY	JUN	JUL	AUG	SEP
1	9.4	17	11	11	11	19	12	12	17	11	11	14
2	11	16	10	18	10	18	13	14	16	13	11	14
3	11	18	9.4	15	568	16	17	16	15	12	11	14
4	11	18	920	13	59	15	15	17	16	11	12	14
5	12	17	12	13	296	15	15	16	15	12	12	13
6	12	18	153	12	583	145	17	15	13	13	15	13
7	12	20	463	12	1,680	18	17	17	13	11	14	13
8	11	20	124	15	18	669	14	19	13	11	13	13
9	12	19	10	292	14	17	15	18	12	14	12	13
10	11	84	8.8	28	737	12	19	19	12	15	11	13
11	12	452	11	9.4	1,860	491	20	17	14	15	12	12
12	11	11	12	12	817	26	18	14	14	15	14	14
13	12	12	12	12	364	15	15	12	15	15	15	12
14	11	1,320	12	11	22	15	15	13	15	12	14	12
15	10	13	13	13	14	17	14	13	15	10	12	13
16	12	1,050	12	2,590	12	17	14	13	13	15	11	12
17	12	274	12	48	12	16	17	13	12	15	12	13
18	173	11	11	823	9.4	16	18	13	15	12	12	14
19	75	8.8	11	41	11	19	17	13	16	12	12	15
20	12	10	12	12	15	722	18	13	14	13	12	17
21	11	11	12	12	14	578	19	14	17	13	12	16
22	11	11	12	12	15	32	15	14	16	17	13	13
23	11	9.4	12	11	16	15	16	14	15	38	14	13
24	13	10	12	11	15	14	17	15	16	15	15	15
25	13	11	10	12	14	14	15	14	16	14	15	14
26	13	10	12	11	16	23	12	15	16	14	14	13
27	15	11	12	11	531	12	11	15	14	13	14	13
28	14	12	13	9.4	166	15	10	14	13	13	14	13
29	18	12	13	11	------	13	9.4	17	13	12	13	13
30	16	12	12	333	------	14	12	17	11	12	12	12
31	15	------	12	11	------	13	------	17	------	12	13	------
TOTAL	602.4	3,518.2	1,971.2	4,444.8	7,899.4	3,041	456.4	463	432	430	397	403
MEAN	19.4	117	63.6	143	282	98.1	15.2	14.9	14.4	13.9	12.8	13.4
MAX	173	1,320	920	2,590	1,860	722	20	19	17	38	15	17
MIN	9.4	8.8	8.8	9.4	9.4	12	9.4	12	11	10	11	12
AC-FT	1,190	6,980	3,910	8,820	15,670	6,030	905	918	857	853	787	799

CAL YR 1972 TOTAL 9,713.8 MEAN 26.5 MAX 1,320 MIN 8.2 AC-FT 19,270
WTR YR 1973 TOTAL 24,058.4 MEAN 65.9 MAX 2,590 MIN 8.8 AC-FT 47,720

11104000 TOPANGA CREEK NEAR TOPANGA BEACH, CALIF.

LOCATION.--Lat 34°03'52", long 118°35'10", in Boca de Santa Monica Grant, Los Angeles County, on downstream side of right abutment of highway bridge, 1.7 miles north of Topanga Beach.

DRAINAGE AREA.--18.0 sq mi.

PERIOD OF RECORD.--January 1930 to September 1938, October 1939 to current year.

GAGE.--Water-stage recorder. Datum of gage is 265.60 ft above mean sea level (levels by Los Angeles County Flood Control District). Prior to June 5, 1940, at different datum. June 5, 1940, to Dec. 9, 1941, at site 400 ft upstream at different datum.

AVERAGE DISCHARGE.--42 years, 5.69 cfs (4,120 acre-ft per year).

EXTREMES.--Current year: Maximum discharge, 3,840 cfs Feb. 11 (gage height, 9.00 ft); minimum daily, 0.05 cfs Sept. 27.
Period of record: Maximum discharge, 12,200 cfs Jan. 25, 1969 (gage height, 13.36 ft), from rating curve extended above 610 cfs on basis of slope-area measurement of maximum flow; no flow at times in some years.

REMARKS.--No regulation or diversion above station.

COOPERATION.--Records furnished by Los Angeles County Flood Control District and reviewed by Geological Survey.

DISCHARGE, IN CUBIC FEET PER SECOND, WATER YEAR OCTOBER 1972 TO SEPTEMBER 1973

DAY	OCT	NOV	DEC	JAN	FEB	MAR	APR	MAY	JUN	JUL	AUG	SEP
1	.15	.20	.20	.35	.68	12	4.4	1.4	1.1	.50	.20	.10
2	.15	.25	.20	.35	.68	8.4	4.1	1.3	1.2	.45	.20	.10
3	.15	.25	.25	.40	4.5	8.4	3.7	1.2	1.0	.35	.20	.09
4	.20	.20	2.4	.40	9.6	8.7	3.2	1.2	.92	.30	.20	.15
5	.15	.25	.60	.40	3.1	8.7	3.2	1.2	.92	.30	.25	.25
6	.10	.25	.60	.45	72	12	3.2	1.2	.76	.35	.30	.15
7	.15	.20	1.5	.45	79	9.3	3.4	1.3	.68	.40	.25	.15
8	.20	.20	1.0	.45	17	39	3.2	1.4	.55	.40	.25	.15
9	.20	.20	.60	1.7	9.6	20	3.0	1.4	.50	.40	.25	.15
10	.20	.25	.50	.84	371	16	2.9	1.3	.50	.40	.20	.15
11	.15	1.4	.50	.60	1,140	17	2.9	1.3	.55	.35	.20	.30
12	.20	.40	.50	.55	94	12	2.9	1.3	.55	.35	.20	.30
13	.25	.35	.60	.55	170	10	2.7	1.7	.55	.40	.20	.25
14	.25	9.6	.50	.50	39	9.0	2.7	1.2	.55	.35	.25	.30
15	.35	.60	.55	.45	26	8.1	2.7	1.2	.50	.25	.25	.30
16	.30	9.0	.55	66	18	6.6	2.6	1.1	.50	.25	.25	.25
17	.30	2.7	.55	12	14	6.2	2.4	1.1	.55	.25	.20	.25
18	.30	.68	.55	255	12	5.9	2.4	1.0	.60	.25	.25	.25
19	.30	.45	.55	30	10	6.2	2.2	1.1	.50	.25	.25	.25
20	.25	.35	.50	5.5	9.3	41	1.9	1.1	.40	.30	.25	.25
21	.25	.30	.50	4.1	8.1	16	1.8	1.0	.30	.35	.25	.25
22	.20	.30	.45	2.4	6.9	11	1.7	.84	.35	.35	.20	.20
23	.20	.25	.45	1.8	6.6	8.7	1.5	.76	.35	.35	.20	.20
24	.20	.25	.40	1.4	6.6	7.5	1.7	.76	.35	.40	.20	.10
25	.20	.25	.30	1.2	6.4	7.2	1.5	.84	.35	.35	.25	.09
26	.20	.25	.30	1.2	5.9	6.9	1.7	.92	.40	.35	.20	.07
27	.30	.25	.30	.92	28	6.2	1.7	.76	.45	.35	.25	.05
28	.30	.15	.35	.84	36	5.9	1.7	.76	.45	.35	.25	.06
29	.20	.20	.35	.68	------	5.5	1.7	.84	.45	.35	.25	.07
30	.15	.20	.35	1.0	------	5.1	1.5	.84	.45	.35	.15	.08
31	.15	------	.35	.84	------	4.6	------	.84	------	.25	.10	------
TOTAL	6.65	30.18	17.30	393.32	2,203.96	349.1	76.2	34.16	17.28	10.65	6.90	5.31
MEAN	.21	1.01	.56	12.7	78.7	11.3	2.54	1.10	.58	.34	.22	.18
MAX	.35	9.6	2.4	255	1,140	41	4.4	1.7	1.2	.50	.30	.30
MIN	.10	.15	.20	.35	.68	4.6	1.5	.76	.30	.25	.10	.05
AC-FT	13	60	34	780	4,370	692	151	68	34	21	14	11

CAL YR 1972 TOTAL 176.53 MEAN .48 MAX 9.6 MIN .10 AC-FT 350
WTR YR 1973 TOTAL 3,151.01 MEAN 8.63 MAX 1,140 MIN .05 AC-FT 6,250

11105500 MALIBU CREEK AT CRATER CAMP, NEAR CALABASAS, CALIF.

LOCATION.--Lat 34°04'40", long 118°42'03", in SW¼ sec.18, T.1 S., R.17 W., Los Angeles County, on right bank 700 ft downstream from Cold Creek, 0.2 mile downstream from Crater Camp, and 6 miles southwest of Calabasas.

DRAINAGE AREA.--105 sq mi.

PERIOD OF RECORD.--January 1931 to current year.

GAGE.--Water-stage recorder. Datum of gage is 432.82 ft above mean sea level (levels by Los Angeles County Flood Control District). Prior to Nov. 16, 1954, at datum 2.31 ft lower.

AVERAGE DISCHARGE.--42 years, 21.8 cfs (15,790 acre-ft per year).

EXTREMES.--Current year: Maximum discharge, 7,480 cfs Feb. 11 (gage height, 11.50 ft); minimum daily, 0.80 cfs Oct. 6.
Period of record: Maximum discharge, 33,800 cfs Jan. 25, 1969 (gage height, 21.43 ft), from rating curve extended above 6,000 cfs on basis of slope-area measurements at gage heights 17.27 and 21.43 ft; no flow at times in some years.

REMARKS.--Flow partly regulated by many small recreational reservoirs. Small diversions above station for domestic use.

COOPERATION.--Records furnished by Los Angeles County Flood Control District and reviewed by Geological Survey.

DISCHARGE, IN CUBIC FEET PER SECOND, WATER YEAR OCTOBER 1972 TO SEPTEMBER 1973

DAY	OCT	NOV	DEC	JAN	FEB	MAR	APR	MAY	JUN	JUL	AUG	SEP
1	2.3	4.0	2.5	4.2	6.4	121	39	12	6.4	4.0	2.3	1.9
2	1.9	4.0	2.7	4.4	6.4	86	35	11	8.6	4.0	2.7	2.0
3	1.4	4.0	3.1	4.4	33	70	30	11	9.0	2.5	2.9	2.0
4	1.1	3.6	5.8	4.0	58	63	30	11	6.1	2.9	2.3	2.2
5	1.1	3.8	4.2	4.2	22	53	30	13	6.1	4.8	2.3	2.2
6	.80	3.6	4.0	4.2	229	72	27	11	8.0	3.8	2.3	2.2
7	1.1	3.3	9.6	4.2	251	75	27	10	8.0	4.4	2.5	2.5
8	1.4	3.3	6.1	4.2	82	162	26	9.3	6.1	4.6	2.0	2.7
9	1.7	3.3	4.8	26	54	149	23	9.9	7.1	4.4	2.0	2.2
10	1.4	4.0	4.6	8.0	628	100	24	10	7.4	3.6	2.0	2.3
11	1.7	6.3	4.4	5.4	3,340	123	23	9.6	6.8	3.1	2.0	2.0
12	2.3	3.8	4.4	4.8	468	143	19	11	6.4	3.1	2.2	2.3
13	2.3	3.3	4.2	4.6	582	88	23	11	7.1	3.1	2.0	2.7
14	2.9	51	4.4	4.8	233	72	21	11	7.1	2.9	2.0	2.7
15	3.1	6.6	4.4	4.8	170	60	18	10	5.8	3.1	1.9	2.7
16	3.3	27	3.6	124	129	58	18	9.6	6.4	3.1	2.0	2.9
17	3.3	50	3.3	106	109	54	19	8.6	5.4	2.7	1.9	2.5
18	3.1	7.4	2.5	475	96	49	17	11	5.8	2.7	1.5	2.5
19	2.7	5.4	2.5	172	85	46	19	11	4.4	2.9	1.4	2.9
20	2.9	4.6	2.7	34	67	260	18	12	4.2	4.2	1.5	3.1
21	2.5	4.2	2.5	20	43	107	14	11	2.7	3.6	1.4	3.3
22	2.5	5.1	3.6	15	49	106	14	11	3.8	3.6	1.2	3.3
23	2.5	3.1	4.2	13	47	82	15	9.0	3.6	3.8	1.2	3.1
24	2.3	2.9	3.8	12	63	66	14	9.9	3.6	4.4	1.4	3.3
25	2.3	2.9	3.8	10	58	60	17	8.6	3.8	3.8	1.5	2.9
26	2.2	3.1	4.0	9.3	39	60	15	9.3	3.3	3.6	1.7	2.9
27	2.7	3.1	4.2	8.3	92	56	10	8.0	3.6	2.9	1.7	2.5
28	2.9	2.9	4.2	8.0	260	51	8.6	7.1	3.8	2.5	1.7	2.5
29	2.9	2.7	3.8	8.0	------	46	9.6	6.6	3.3	2.5	1.9	2.3
30	3.3	2.5	4.4	8.0	------	42	11	6.1	2.9	2.7	1.9	2.9
31	3.6	------	4.4	7.4	------	39	------	7.4	------	2.7	1.9	------
TOTAL	71.50	234.8	126.7	1,122.2	7,299.8	2,619	614.2	307.0	166.6	106.0	59.2	77.5
MEAN	2.31	7.83	4.09	36.2	261	84.5	20.5	9.90	5.55	3.42	1.91	2.58
MAX	3.6	51	9.6	475	3,340	260	39	13	9.0	4.8	2.9	3.3
MIN	.80	2.5	2.5	4.0	6.4	39	8.6	6.1	2.7	2.5	1.2	1.9
AC-FT	142	466	251	2,230	14,480	5,190	1,220	609	330	210	117	154

CAL YR 1972 TOTAL 1,373.90 MEAN 3.75 MAX 51 MIN .80 AC-FT 2,730
WTR YR 1973 TOTAL 12,804.50 MEAN 35.1 MAX 3,340 MIN .80 AC-FT 25,400

11105850 ARROYO SIMI NEAR SIMI, CALIF.

LOCATION.--Lat 34°16'41", long 118°47'43", on line between secs.7 and 8, T.2 N., R.18 W., Ventura County, on downstream side of bridge on Los Angeles Avenue, 0.5 mile upstream from Brea Canyon, and 1.1 miles northwest of Simi.

DRAINAGE AREA.--70.6 sq mi.

PERIOD OF RECORD.--October 1933 to September 1951, October 1952 to current year. Monthly discharge, in acre-feet, only for October 1933 to September 1951, October 1952 to October 1968, published in WSP 2128.

GAGE.--Water-stage recorder. Datum of gage is 701.00 ft above mean sea level (levels by Ventura County Flood Control District).

EXTREMES.--Current year: Maximum discharge, 3,200 cfs Feb. 11 (gage height, 3.62 ft); minimum daily, 0.02 cfs May 22-24.
Period of record: Maximum discharge, 6,330 cfs Feb. 25, 1969 (gage height, 5.7 ft, from floodmark); no flow most of each year.

REMARKS.--No regulation above station. Pumping from wells for irrigation. Records of suspended-sediment discharge for the current year are published in Part 2 of this report.

COOPERATION.--Records furnished by Ventura County Flood Control District and reviewed by Geological Survey.

DISCHARGE, IN CUBIC FEET PER SECOND, WATER YEAR OCTOBER 1972 TO SEPTEMBER 1973

DAY	OCT	NOV	DEC	JAN	FEB	MAR	APR	MAY	JUN	JUL	AUG	SEP
1	.05	.05	.16	.05	.16	.33	.05	.16	.05	.05	.05	.05
2	.05	.05	.16	.05	.05	.16	.05	.16	.05	.05	.05	.05
3	.05	.05	.16	.05	30	.05	.05	.16	.05	.05	.05	.05
4	.05	.28	48	.05	.67	.05	.05	.16	.05	.05	.05	.05
5	.05	.05	.55	.05	32	.05	.05	.16	.05	.05	.05	.05
6	.05	.05	.28	.05	98	4.4	.05	.16	.05	.05	.05	.05
7	.05	.05	2.9	.16	34	.89	.05	.16	.05	.05	.05	.05
8	.05	.05	1.5	.31	6.1	54	.05	.16	.05	.05	.05	.05
9	.05	.05	.16	16	.33	.77	.16	.16	.05	.05	.05	.05
10	.05	.05	.05	1.6	154	.16	.05	.05	.05	.05	.05	.05
11	.05	9.6	.05	.33	648	46	.05	.05	.05	.05	.05	.05
12	.05	1.0	.05	.16	84	4.9	.05	.05	.05	.05	.05	.05
13	.05	1.0	.05	.16	82	.16	.76	.05	.05	.05	.05	.05
14	.05	94	.05	.16	.76	.05	.05	.05	.05	.05	.05	.05
15	.05	1.5	.05	.33	.50	.05	.05	.05	.05	.05	.05	.05
16	.05	29	.05	214	.33	.05	.05	.16	.05	.05	.05	.05
17	.05	16	.05	11	.33	.05	.05	.16	.05	.05	.05	.05
18	.05	.05	.05	236	.33	.05	.05	.05	.05	.05	.05	.05
19	.05	.05	.05	9.6	.33	.05	.05	.05	.05	.05	.05	.05
20	.05	.05	.05	.05	.16	125	.05	.05	.05	.05	.05	.05
21	.05	.05	.05	.05	4.2	26	.05	.05	.05	.05	.05	.05
22	.05	.05	.05	.05	4.4	4.9	.05	.02	.05	.05	.05	.05
23	.05	.05	.05	.05	4.4	.16	.05	.02	.05	.05	.05	.05
24	.05	.05	.05	.05	7.0	.16	.05	.02	.05	.05	.05	.05
25	.05	.05	.05	.05	2.4	.16	.16	.05	.05	.05	.05	.05
26	.05	.05	.05	.05	1.6	.16	.16	.05	.05	.05	.05	.05
27	.05	.05	.05	.05	21	.16	.33	.05	.05	.05	.05	.05
28	.05	.05	.05	.05	52	.16	.16	.05	.05	.05	.05	.05
29	.05	.05	.05	.05	------	.16	.16	.05	.05	.05	.05	.05
30	.05	.05	.05	.16	------	.16	.16	.05	.05	.05	.05	.05
31	.05	------	.05	.05	------	.16	------	.05	------	.05	.05	------
TOTAL	1.55	153.48	54.97	490.82	1,269.05	269.56	3.15	2.67	1.50	1.55	1.55	1.50
MEAN	.050	5.12	1.77	15.8	45.3	8.70	.11	.086	.050	.050	.050	.050
MAX	.05	94	48	236	648	125	.76	.16	.05	.05	.05	.05
MIN	.05	.05	.05	.05	.05	.05	.05	.02	.05	.05	.05	.05
AC-FT	3.1	304	109	974	2,520	535	6.2	5.3	3.0	3.1	3.1	3.0

CAL YR 1972 TOTAL 221.15 MEAN .60 MAX 94 MIN .02 AC-FT 439
WTR YR 1973 TOTAL 2,251.35 MEAN 6.17 MAX 648 MIN .02 AC-FT 4,470

PEAK DISCHARGE (BASE, 500 CFS)

DATE	TIME	G.H.	DISCHARGE	DATE	TIME	G.H.	DISCHARGE
11-14	0900	2.90	840	2-11	0300	3.62	3,200
1-16	1850	3.98	1,610	2-12	2300	2.43	1,040
1-18	1800	3.48	2,120	3-20	0520	2.42	906

11106400 CONEJO CREEK ABOVE HIGHWAY 101, NEAR CAMARILLO, CALIF.

LOCATION.--Lat 34°14'12", long 118°57'50", Ventura County, on left bank 2.6 miles upstream from U.S. Highway 101, and 4.4 miles northeast of Camarillo.

DRAINAGE AREA.--64.2 sq mi.

PERIOD OF RECORD.--October 1972 to September 1973.

GAGE.--Water-stage recorder. Altitude of gage is 180 ft (from topographic map).

EXTREMES.--Current year: Maximum discharge, 5,740 cfs Feb. 11 (gage height, 7.35 ft); minimum daily, 0.13 cfs May 31.

REMARKS.--Records good. No regulation or diversion above station.

COOPERATION.--Records furnished by Ventura County Flood Control District and reviewed by Geological Survey.

DISCHARGE, IN CUBIC FEET PER SECOND, WATER YEAR OCTOBER 1972 TO SEPTEMBER 1973

DAY	OCT	NOV	DEC	JAN	FEB	MAR	APR	MAY	JUN	JUL	AUG	SEP
1	5.2	5.2	6.1	5.6	6.5	18	8.0	5.6	2.4	8.0	8.0	5.6
2	6.1	6.1	7.0	6.5	6.5	11	8.0	5.2	5.2	8.0	7.0	5.6
3	6.1	6.1	7.5	5.6	19	8.5	7.5	6.5	6.1	8.0	6.5	5.6
4	5.6	6.1	57	4.8	8.1	9.6	7.5	11	7.0	7.0	6.1	6.1
5	5.6	6.1	5.6	5.2	25	9.6	6.1	6.5	7.5	7.0	5.6	7.5
6	5.6	6.1	4.8	5.2	232	12	7.0	6.5	7.5	7.5	6.5	7.5
7	5.2	6.1	9.0	5.6	81	12	7.0	7.0	8.0	7.5	7.0	7.0
8	5.2	6.5	14	6.1	15	102	6.1	7.0	8.0	7.0	7.0	6.5
9	5.2	7.0	7.0	21	12	18	7.0	7.0	7.5	8.0	7.0	6.5
10	6.5	7.0	7.0	25	129	12	7.0	7.5	7.5	8.0	7.5	6.1
11	7.0	19	7.0	6.1	1,240	19	7.0	7.5	8.5	7.5	7.5	8.0
12	7.0	5.6	7.5	6.5	84	21	7.5	7.5	7.5	7.0	7.5	7.5
13	7.0	5.6	8.0	6.1	110	8.5	7.5	8.5	8.5	6.1	7.5	7.0
14	7.5	69	7.5	6.1	30	8.0	7.5	9.0	8.5	5.6	8.0	7.0
15	13	21	6.1	6.5	25	7.5	8.0	9.0	8.5	5.6	7.5	7.0
16	9.0	35	3.1	246	17	6.5	8.5	9.6	8.0	6.5	8.0	6.5
17	7.5	61	2.5	35	10	6.1	8.5	10	8.0	6.5	8.0	7.5
18	7.5	2.3	6.1	530	9.6	6.5	8.5	10	8.0	6.1	7.5	8.0
19	7.0	1.6	6.5	49	9.0	7.0	8.5	10	8.0	7.0	6.5	8.0
20	6.5	2.0	6.5	9.0	9.6	139	8.0	10	7.0	7.0	6.5	8.0
21	8.0	2.0	6.1	7.5	9.0	34	7.5	10	6.5	7.0	6.5	8.0
22	8.0	1.8	6.1	7.0	9.6	19	7.5	9.0	6.5	7.0	6.5	8.0
23	8.0	2.3	6.1	6.5	9.6	10	7.5	7.5	6.5	8.0	7.5	8.0
24	8.0	2.8	6.1	6.1	15	10	7.5	7.0	6.5	8.5	6.5	8.5
25	7.0	3.1	5.2	7.0	10	9.0	7.5	7.0	7.5	8.0	6.1	8.5
26	7.0	3.8	5.2	7.0	9.0	9.6	7.5	7.0	8.0	8.0	6.1	8.0
27	6.1	4.8	5.2	6.5	18	7.5	7.5	6.1	8.5	8.0	6.1	8.0
28	6.1	4.8	5.2	6.1	66	8.0	7.0	6.1	9.0	7.5	6.1	8.0
29	5.6	4.8	5.2	7.0	------	8.0	6.5	7.0	9.0	7.5	6.1	7.5
30	6.1	4.8	5.2	7.0	------	8.5	6.5	1.8	8.0	7.5	6.1	7.5
31	6.1	------	6.1	6.5	------	8.0	------	.13	------	8.0	5.6	------
TOTAL	211.3	319.4	247.5	1,065.1	2,224.5	573.4	223.2	229.53	223.2	225.9	211.9	218.5
MEAN	6.82	10.6	7.98	34.4	79.4	18.5	7.44	7.40	7.44	7.29	6.84	7.28
MAX	13	69	57	530	1,240	139	8.5	11	9.0	8.5	8.0	8.5
MIN	5.2	1.6	2.5	4.8	6.5	6.1	6.1	.13	2.4	5.6	5.6	5.6
AC-FT	419	634	491	2,110	4,410	1,140	443	455	443	448	420	433

WTR YR 1973 TOTAL 5,973.43 MEAN 16.4 MAX 1,240 MIN .13 AC-FT 11,850

PEAK DISCHARGE (BASE, 200 CFS)

DATE	TIME	G.H.	DISCHARGE	DATE	TIME	G.H.	DISCHARGE
11-14	1000	3.95	666	2-5	2230	2.80	276
11-16	1730	2.50	202	2-6	1400	3.43	564
11-17	0500	3.05	368	2-11	0500	7.35	5,740
12-4	1200	3.20	435	2-28	0300	2.20	256
1-16	1900	5.12	1,990	3-8	1130	2.33	380
1-18	1730	6.10	4,040	3-20	0600	3.83	1,120

11106550 CALLEGUAS CREEK AT CAMARILLO STATE HOSPITAL, CALIF.

LOCATION.--Lat 34°10'46", long 119°02'20", in Guadalasca Grant, Ventura County, on downstream side of county road bridge, 1.0 mile northeast of Camarillo State Hospital, and 1.4 miles downstream from Conejo Creek.

DRAINAGE AREA.--248 sq mi.

PERIOD OF RECORD.--October 1968 to current year.

GAGE.--Water-stage recorder. Datum of gage is 58.42 ft above mean sea level (levels by Ventura County Flood Control District).

EXTREMES.--Current year: Maximum discharge, 6,630 cfs Feb. 11 (gage height, 5.86 ft); minimum daily, 0.73 cfs July 28.
Period of record: Maximum discharge, 16,300 cfs Feb. 25, 1969 (gage height, 8.50 ft); no flow at times in some years.

REMARKS.--No regulation above station. Pumping for irrigation in valley above station. Sustained flow from city of Thousand Oaks reclamation plant. Records of suspended-sediment discharge for the current year are published in Part 2 of this report.

COOPERATION.--Records furnished by Ventura County Flood Control District and reviewed by Geological Survey.

DISCHARGE, IN CUBIC FEET PER SECOND, WATER YEAR OCTOBER 1972 TO SEPTEMBER 1973

DAY	OCT	NOV	DEC	JAN	FEB	MAR	APR	MAY	JUN	JUL	AUG	SEP
1	8.6	7.1	6.4	4.4	11	12	7.6	7.6	3.3	1.2	1.4	5.7
2	12	9.5	7.1	5.0	12	10	7.6	7.6	4.4	1.7	2.1	5.0
3	13	9.5	6.4	3.8	27	11	7.6	7.6	8.6	1.4	3.3	3.8
4	11	8.6	84	3.8	21	16	10	9.5	9.5	2.9	6.4	4.4
5	9.5	9.5	10	5.0	14	12	7.1	8.6	4.4	3.3	7.6	5.7
6	10	7.6	6.4	5.7	244	12	14	6.4	2.9	4.4	7.1	6.4
7	10	6.4	10	6.4	137	16	13	9.5	3.3	1.7	7.6	6.4
8	9.5	5.7	12	7.6	21	80	11	7.6	6.4	2.4	8.6	5.7
9	8.6	7.1	14	21	16	17	12	7.1	4.4	3.8	8.6	5.0
10	7.6	8.6	14	40	236	10	10	5.7	5.7	3.8	8.6	3.8
11	6.4	13	13	21	1,890	12	10	7.1	4.4	3.8	8.6	4.4
12	6.4	11	11	26	116	23	10	7.6	7.1	4.4	6.4	4.4
13	7.1	8.6	11	25	294	13	7.6	8.6	8.6	3.8	5.0	4.4
14	7.1	208	11	17	23	12	9.5	9.5	8.6	2.1	5.7	5.0
15	7.6	32	9.5	21	18	8.6	7.6	9.5	5.7	1.7	5.7	5.0
16	12	28	8.6	457	13	8.6	7.6	8.6	5.0	2.1	3.3	5.0
17	13	126	5.7	102	11	9.5	7.6	9.5	7.1	2.4	3.3	6.4
18	64	9.5	6.4	691	9.5	10	7.6	9.5	6.4	2.9	3.3	6.4
19	12	6.4	8.6	142	7.6	11	7.6	7.1	5.7	1.4	3.3	7.1
20	5.7	6.4	5.7	22	9.5	192	7.6	6.4	4.4	1.2	3.3	7.1
21	5.0	7.1	5.7	20	7.6	54	7.6	7.1	4.4	2.1	5.0	5.0
22	5.0	6.4	5.7	14	7.6	40	7.6	7.1	5.0	2.4	4.4	5.7
23	5.0	7.1	4.4	11	9.5	13	7.6	7.1	4.4	2.4	3.3	5.7
24	5.0	7.6	3.8	10	14	10	7.6	7.6	3.8	2.4	3.8	5.7
25	4.4	7.1	2.9	9.5	14	10	7.6	14	4.4	.90	3.3	5.7
26	5.7	8.6	2.9	8.6	10	11	7.6	11	3.3	1.7	2.9	5.7
27	7.6	6.4	3.3	7.6	10	8.6	7.6	10	3.3	1.4	3.3	5.7
28	7.1	6.4	3.3	7.6	68	8.6	7.6	8.6	3.8	.73	3.8	5.7
29	7.1	5.7	3.8	9.5	------	7.1	7.6	13	1.7	1.2	3.3	5.7
30	7.1	7.1	3.8	9.5	------	7.1	7.6	17	1.4	1.2	3.3	5.7
31	6.4	------	3.8	9.5	------	7.1	------	13	------	1.4	5.0	------
TOTAL	306.5	598.0	304.2	1,743.5	3,271.3	672.2	258.6	276.1	151.4	70.23	150.6	163.4
MEAN	9.89	19.9	9.81	56.2	117	21.7	8.62	8.91	5.05	2.27	4.86	5.45
MAX	64	208	84	691	1,890	192	14	17	9.5	4.4	8.6	7.1
MIN	4.4	5.7	2.9	3.8	7.6	7.1	7.1	5.7	1.4	.73	1.4	3.8
AC-FT	608	1,190	603	3,460	6,490	1,330	513	548	300	139	299	324

CAL YR 1972 TOTAL 2,339.02 MEAN 6.39 MAX 208 MIN 0 AC-FT 4,640
WTR YR 1973 TOTAL 7,966.03 MEAN 21.8 MAX 1,890 MIN .73 AC-FT 15,800

PEAK DISCHARGE (BASE, 300 CFS)

DATE	TIME	G.H.	DISCHARGE	DATE	TIME	G.H.	DISCHARGE
10-18	2030	3.33	1,310	2-6	1600	2.39	516
11-14	1030	3.02	1,090	2-7	0100	2.35	486
11-17	0600	2.14	381	2-11	0630	5.86	6,630
12-4	1500	2.03	347	2-13	0200	3.03	1,190
1-16	2100	3.55	1,840	3-8	1300	2.28	353
1-18	1830	4.34	3,300	3-27	0700	2.55	800

11107745 SANTA CLARA RIVER ABOVE RAILROAD STATION, NEAR LANG, CALIF.

LOCATION.--Lat 34°25'52", long 118°21'22", in SE¼SW¼NW¼ sec.16, T.4 N., R.14 W., Los Angeles County, on downstream side of railroad bridge, 1.1 miles east of Lang Railroad Station, 1.9 miles downstream from Aqua Dulce Canyon, and 5.2 miles northeast of Solemint.

DRAINAGE AREA.--157 sq mi.

PERIOD OF RECORD.--October 1949 to September 1968, October 1969 to current year. Monthly discharge only for 1950-70 published in 1971 report. Daily discharge available in historical computer files.

GAGE.--Water-stage recorder. Altitude of gage is 1,750 ft (from topographic map). Prior to Apr. 3, 1970, at site 0.4 mile downstream at different datum.

AVERAGE DISCHARGE.--23 years (1949-69, 1970-73), 5.11 cfs (3,700 acre-ft per year).

EXTREMES.--Current year: Maximum discharge, 866 cfs Feb. 11 (gage height, 3.65 ft); no flow Oct. 1 to Nov. 9. Period of record: Maximum discharge, 5,910 cfs (estimated) Feb. 25, 1969; no flow Sept. 4-7, 1971, Aug. 30 to Nov. 9, 1972.

REMARKS.--Records poor below 5.0 cfs. No regulation above station. Small diversions for irrigation and recreation.

COOPERATION.--Records furnished by Los Angeles County Flood Control District and reviewed by Geological Survey.

DISCHARGE, IN CUBIC FEET PER SECOND, WATER YEAR OCTOBER 1972 TO SEPTEMBER 1973

DAY	OCT	NOV	DEC	JAN	FEB	MAR	APR	MAY	JUN	JUL	AUG	SEP
1		0	.50	1.7	1.9	17	13	5.6	.50	.40	.30	.20
2		0	.50	1.7	1.9	13	13	5.6	.20	.40	.30	.20
3		0	.50	2.2	2.2	13	13	5.0	1.0	.40	.30	.20
4		0	.50	1.9	2.2	11	12	4.3	3.0	.40	.20	.10
5		0	.50	1.7	2.2	11	11	4.3	3.0	.40	.20	.10
6		0	.50	1.2	5.6	10	9.8	4.3	1.7	.40	.20	.10
7		0	.50	1.0	8.2	12	11	4.2	1.4	.40	.20	.10
8		0	.50	1.0	3.7	12	9.8	4.2	1.2	.40	.20	.10
9		0	.50	1.7	2.2	10	9.8	4.2	1.0	.30	.20	.10
10		.10	.70	1.7	7.8	11	8.2	4.1	1.2	.30	.20	.10
11		.10	1.0	1.7	433	26	6.9	4.1	1.2	.30	.20	.10
12		.10	1.0	1.4	109	19	6.9	4.1	1.2	.30	.20	.10
13		.10	1.0	1.0	57	17	6.2	4.0	1.2	.30	.20	.10
14		.10	.70	1.0	34	15	6.9	4.0	1.4	.30	.30	.10
15		.10	.50	.70	21	15	6.9	4.0	1.4	.30	.30	.10
16		.10	.70	2.4	18	14	5.6	3.9	1.7	.30	.30	.10
17		.10	.70	1.7	14	14	6.9	3.9	1.7	.30	.30	.20
18		.10	.70	9.5	12	12	7.5	3.9	1.7	.30	.20	.20
19		.10	.70	7.5	11	9.8	7.5	3.8	2.0	.30	.20	.20
20		.10	.70	4.3	11	31	7.5	3.8	2.2	.30	.20	.20
21		.10	1.0	3.7	11	25	6.9	3.8	1.2	.30	.10	.20
22		.20	1.0	3.0	11	18	7.5	3.7	1.0	.20	.10	.20
23		.50	1.4	3.0	11	16	7.5	3.7	.70	.20	.10	.20
24		.50	1.7	3.0	11	15	6.9	3.7	.50	.20	.10	.20
25		.50	1.7	2.4	9.8	14	3.7	3.7	.50	.20	.10	.10
26		.50	1.4	2.4	9.8	17	3.7	3.7	.40	.20	.10	.10
27		.50	1.7	3.0	16	17	4.3	3.0	.40	.20	.10	.10
28		.50	1.9	2.4	28	17	5.0	1.7	.40	.20	.10	.10
29		.50	1.7	2.4	------	16	6.2	.50	.40	.20	.20	.10
30		.50	1.4	2.4	------	16	6.2	.50	.40	.20	.20	.10
31		------	1.4	2.2	------	15	------	.50	------	.30	.20	------
TOTAL	0	5.40	29.20	76.90	865.5	478.8	237.3	113.80	35.80	9.20	6.10	4.10
MEAN	0	.18	.94	2.48	30.9	15.4	7.91	3.67	1.19	.30	.20	.14
MAX	0	.50	1.9	9.5	433	31	13	5.6	3.0	.40	.30	.20
MIN	0	0	.50	.70	1.9	9.8	3.7	.50	.20	.20	.10	.10
AC-FT	0	11	58	153	1,720	950	471	226	71	18	12	8.1

CAL YR 1972 TOTAL 493.32 MEAN 1.35 MAX 8.2 MIN 0 AC-FT 979
WTR YR 1973 TOTAL 1,862.10 MEAN 5.10 MAX 433 MIN 0 AC-FT 3,690

11107860 BOUQUET CREEK NEAR SAUGUS, CALIF.

LOCATION.--Lat 34°26'56", long 118°30'22", in NE¼SW¼NE¼ sec.12, T.4 N., R.16 W., Los Angeles County, on left bank 50 ft upstream from Urbandale Avenue bridge, 0.3 mile upstream from Haskell Canyon, and 3.2 miles northeast of Saugus.

DRAINAGE AREA.--51.6 sq mi.

PERIOD OF RECORD.--October 1970 to current year.

GAGE.--Water-stage recorder. Altitude of gage is 1,305 ft (from topographic map).

EXTREMES.--Current year: Maximum discharge, 750 cfs Feb. 11 (gage height, 3.04 ft); no flow for long periods. Period of record: Maximum discharge, 750 cfs Feb. 11, 1973 (gage height, 3.04 ft); no flow at times in each year.

REMARKS.--Records poor. Partial regulation by Bouquet Reservoir (capacity, 36,500 cfs, principally used as equalizing reservoir to city of Los Angeles aqueduct). Some pumping by wells for irrigation.

COOPERATION.--Records furnished by Los Angeles County Flood Control District and reviewed by Geological Survey.

DISCHARGE, IN CUBIC FEET PER SECOND, WATER YEAR OCTOBER 1972 TO SEPTEMBER 1973

DAY	OCT	NOV	DEC	JAN	FEB	MAR	APR	MAY	JUN	JUL	AUG	SEP
1		0		0	0	0						
2		0		0	0	0						
3		0		0	0	0						
4		0		0	0	0						
5		0		0	2.3	0						
6		0		0	13	.10						
7		0		0	6.5	.10						
8		0		0	0	2.8						
9		0		0	0	0						
10		0		0	15	0						
11		0		0	81	5.1						
12		0		0	.10	0						
13		0		0	8.1	0						
14		1.3		0	0	0						
15		0		0	0	0						
16		.40		.20	0	0						
17		0		0	0	0						
18		0		8.3	0	0						
19		0		.20	0	0						
20		0		0	0	4.9						
21		0		0	0	.90						
22		0		0	0	0						
23		0		0	0	0						
24		0		0	0	0						
25		0		0	0	0						
26		0		0	0	0						
27		0		0	.40	0						
28		0		0	.60	0						
29		0		0	------	0						
30		0		0	------	0						
31		------		0	------	0	------		------			------
TOTAL	0	1.70	0	8.70	127.00	13.90	0	0	0	0	0	0
MEAN	0	.057	0	.28	4.54	.45	0	0	0	0	0	0
MAX	0	1.3	0	8.3	81	5.1	0	0	0	0	0	0
MIN	0	0	0	0	0	0	0	0	0	0	0	0
AC-FT	0	3.4	0	17	252	28	0	0	0	0	0	0

CAL YR 1972 TOTAL 18.50 MEAN .051 MAX 3.2 MIN 0 AC-FT 37
WTR YR 1973 TOTAL 151.30 MEAN .41 MAX 81 MIN 0 AC-FT 300

11108145 CASTAIC CREEK NEAR SAUGUS, CALIF.

LOCATION.--Lat 34°25'42", long 118°37'40", in San Francisco Grant, Los Angeles County, on downstream side of bridge on State Highway 126, 0.6 mile upstream from mouth, 4.6 miles southwest of Castaic, and 5.1 miles northwest of Saugus.

DRAINAGE AREA.--202 sq mi.

PERIOD OF RECORD.--December 1945 to current year. Monthly discharge only for 1947-70 published in 1971 report. Daily discharge available in historical computer files.

GAGE.--Water-stage recorder. Datum of gage is 952.05 ft above mean sea level (levels by Los Angeles County Flood Control District).

AVERAGE DISCHARGE.--27 years (1946-73), 12.2 cfs (8,840 acre-ft per year).

EXTREMES.--Current year: Maximum discharge, 4,630 cfs Feb. 11 (gage height, 6.85 ft); no flow July 1-8, July 16 to Sept. 30.
Period of record: Maximum discharge, 19,300 cfs Feb. 25, 1969, result of slope-area measurement of maximum flow; no flow for all or long periods in each year.

REMARKS.--Records poor below 3.0 cfs. Flow regulated beginning in 1972 by Castaic Reservoir (capacity, 350,000 acre-ft). Imported water from California Water Project stored and released at Castaic Dam.

COOPERATION.--Records furnished by Los Angeles County Flood Control District and reviewed by Geological Survey.

DISCHARGE, IN CUBIC FEET PER SECOND, WATER YEAR OCTOBER 1972 TO SEPTEMBER 1973

DAY	OCT	NOV	DEC	JAN	FEB	MAR	APR	MAY	JUN	JUL	AUG	SEP
1	.30	.20	5.9	33	10	80	11	3.8	2.2	0		
2	.30	.20	4.3	32	10	75	10	3.7	2.1	0		
3	.30	.30	2.6	34	10	75	9.5	3.6	2.0	0		
4	.30	.30	3.0	32	11	75	9.0	3.5	1.9	0		
5	.30	.30	3.0	23	11	53	8.5	3.4	1.8	0		
6	.34	.30	2.2	19	14	40	8.0	3.3	1.7	0		
7	.27	.30	1.6	16	15	18	7.7	3.2	1.6	0		
8	.62	.30	1.2	15	46	70	7.5	3.1	1.5	0		
9	.23	.30	1.2	16	114	90	7.3	3.0	1.4	.10		
10	.27	.30	1.1	15	133	75	7.1	2.9	1.3	.10		
11	.23	.30	1.0	14	1,910	55	6.9	2.8	1.2	.10		
12	.57	.40	.94	12	500	40	6.7	2.7	1.2	.10		
13	.57	.40	.94	11	642	40	6.5	2.6	1.2	.10		
14	.27	.40	.94	11	384	45	6.3	2.5	1.1	.10		
15	.26	.30	.94	11	260	50	6.1	2.4	1.1	.10		
16	.27	.24	.94	14	214	45	5.9	2.3	1.1	0		
17	.26	.20	1.0	23	214	40	5.7	2.2	1.0	0		
18	.39	.18	2.1	40	208	30	5.5	2.1	1.0	0		
19	.43	.18	8.8	54	150	20	5.3	2.0	.80	0		
20	.34	.16	27	46	105	60	5.1	1.9	.70	0		
21	.23	.16	32	39	94	120	4.9	1.8	.60	0		
22	.27	.15	31	46	80	100	4.7	1.7	.50	0		
23	.27	.15	28	57	60	60	4.6	1.6	.40	0		
24	.43	.20	27	50	50	40	4.5	1.7	.30	0		
25	.26	9.5	29	39	40	20	4.4	1.8	.20	0		
26	.30	39	27	32	40	18	4.3	1.9	.10	0		
27	.30	56	30	27	48	16	4.2	2.0	.10	0		
28	.30	55	32	22	96	15	4.1	2.1	.10	0		
29	.30	33	33	18	------	14	4.0	2.2	.10	0		
30	.20	14	32	14	------	13	3.9	2.3	.10	0		
31	.20	------	32	11	------	12	------	2.4	------	0		------
TOTAL	10.13	212.72	403.70	826	5,469	1,504	189.2	78.5	30.40	.70	0	0
MEAN	.33	7.09	13.0	26.6	195	48.5	6.31	2.53	1.01	.023	0	0
MAX	.62	56	33	57	1,910	120	11	3.8	2.2	.10	0	0
MIN	.20	.15	.94	11	10	12	3.9	1.6	.10	0	0	0
AC-FT	20	422	801	1,640	10,850	2,980	375	156	60	1.4	0	0

CAL YR 1972 TOTAL 1,111.57 MEAN 3.04 MAX 56 MIN 0 AC-FT 2,200
WTR YR 1973 TOTAL 8,724.35 MEAN 23.9 MAX 1,910 MIN 0 AC-FT 17,300

11108500 SANTA CLARA RIVER AT LOS ANGELES-VENTURA COUNTY LINE, CALIF.

LOCATION.--Lat 34°23'59", long 118°42'14", in San Francisco Grant, Ventura County, on downstream end of old diversion weir on right bank, 0.8 mile west of Los Angeles-Ventura County line.

DRAINAGE AREA.--644 sq mi.

PERIOD OF RECORD.--October 1952 to current year.

GAGE.--Water-stage recorder. Datum of gage is 794.93 ft above mean sea level.

AVERAGE DISCHARGE.--21 years, 37.5 cfs (27,170 acre-ft per year).

EXTREMES.--Current year: Maximum discharge, 12,800 cfs Feb. 11 (gage height, 7.73 ft); minimum daily, 5.3 cfs Sept. 29, 30.
Period of record: Maximum discharge, 68,800 cfs Jan. 25, 1969 (gage height, 19.01 ft), from rating curve extended above 9,200 cfs of basis of field estimate of maximum flow; no flow at times in some years.

REMARKS.--Records fair. Base flow affected by pumping from wells along stream for irrigation. Flow partly regulated since January 1972 by Castaic Reservoir (capacity, 324,000 acre-ft). Imported water from California Water Project stored and released at Castaic Dam. Records of chemical analyses, water temperatures, and suspended-sediment discharge for the current year are published in Part 2 of this report.

DISCHARGE, IN CUBIC FEET PER SECOND, WATER YEAR OCTOBER 1972 TO SEPTEMBER 1973

DAY	OCT	NOV	DEC	JAN	FEB	MAR	APR	MAY	JUN	JUL	AUG	SEP
1	6.6	7.0	24	137	40	125	167	20	20	14	11	14
2	7.0	7.4	22	140	41	111	154	20	17	13	11	15
3	11	7.4	24	134	98	106	141	19	17	13	11	16
4	11	9.0	92	119	80	122	130	19	16	13	11	16
5	9.0	10	30	86	78	131	119	20	15	13	11	16
6	7.9	9.6	30	63	278	134	108	20	14	12	10	16
7	7.0	9.0	26	54	283	134	100	20	15	12	10	15
8	9.0	7.9	30	46	265	149	92	21	15	12	10	15
9	10	6.6	27	63	463	131	81	22	15	12	10	14
10	9.0	7.4	28	49	955	126	76	22	16	12	11	14
11	14	22	31	40	4,480	141	68	23	16	13	11	13
12	12	13	33	33	1,200	125	59	23	17	13	13	13
13	10	9.0	35	28	1,000	171	51	23	16	13	13	12
14	10	115	34	22	951	174	45	22	17	13	13	12
15	9.6	32	35	16	445	194	41	21	16	13	13	12
16	12	61	37	285	164	204	34	20	16	13	13	12
17	15	58	37	239	213	199	32	20	17	13	13	12
18	17	11	37	409	167	219	29	21	17	13	13	11
19	15	9.0	41	285	164	220	27	21	17	13	13	10
20	13	9.0	66	80	134	242	24	21	16	14	13	9.0
21	14	9.0	98	56	137	301	23	21	16	14	13	8.3
22	14	10	116	61	134	272	22	20	16	14	13	7.4
23	12	11	119	87	125	209	19	20	15	14	12	6.6
24	13	12	122	96	164	179	17	20	15	14	13	6.6
25	10	13	122	81	167	174	16	20	15	14	13	6.2
26	10	40	122	67	167	178	17	19	14	14	13	6.2
27	12	111	125	59	205	171	19	20	14	14	13	5.7
28	13	152	128	56	287	165	20	19	15	12	13	5.7
29	8.3	116	131	54	------	162	20	19	14	12	14	5.3
30	7.4	41	131	55	------	176	20	20	14	12	14	5.3
31	7.0	------	134	49	------	177	------	22	------	12	14	------
TOTAL	335.8	935.3	2,067	3,049	12,885	5,322	1,771	638	473	403	379	330.3
MEAN	10.8	31.2	66.7	98.4	460	172	59.0	20.6	15.8	13.0	12.2	11.0
MAX	17	152	134	409	4,480	301	167	23	20	14	14	16
MIN	6.6	6.6	22	16	40	106	16	19	14	12	10	5.3
AC-FT	666	1,860	4,100	6,050	25,560	10,560	3,510	1,270	938	799	752	655

CAL YR 1972	TOTAL 8,079.2	MEAN 22.1	MAX 152	MIN 3.2	AC-FT 16,030
WTR YR 1973	TOTAL 28,588.4	MEAN 78.3	MAX 4,480	MIN 5.3	AC-FT 56,710

PEAK DISCHARGE (BASE, 750 CFS)

DATE	TIME	G.H.	DISCHARGE	DATE	TIME	G.H.	DISCHARGE
1-16	2330	5.93	2,320	2-11	0730	7.73	12,800
1-18	2300	5.91	2,280				

11109100 PIRU CREEK BELOW THORN MEADOWS, NEAR STAUFFER, CALIF.

LOCATION.--Lat 34°38'21", long 119°05'43", in SW¼NE¼SW¼ sec.3, T.6 N., R.21 W., Ventura County, on right bank 1.3 miles northeast of Thorn Meadows, and 8 miles southwest of Stauffer.

DRAINAGE AREA.--22.5 sq mi.

PERIOD OF RECORD.--October 1971 to current year.

GAGE.--Water-stage recorder. Altitude of gage is 4,280 ft (from topographic map).

EXTREMES.--Current year: Maximum discharge, 1,660 cfs Feb. 11 (gage height, 5.37 ft, from floodmarks), from rating curve extended as explained below; no flow many days.
Period of record: Maximum discharge, 1,660 cfs Feb. 11, 1973 (gage height, 5.37 ft, from floodmarks), from rating curve extended above 60 cfs on basis of slope-area measurement of maximum flow; no flow many days in each year.

REMARKS.--Records good except those for period of no gage-height record, which are fair. No regulation or diversion above station.

COOPERATION.--Six discharge measurements furnished by Ventura County Flood Control District.

DISCHARGE, IN CUBIC FEET PER SECOND, WATER YEAR OCTOBER 1972 TO SEPTEMBER 1973

DAY	OCT	NOV	DEC	JAN	FEB	MAR	APR	MAY	JUN	JUL	AUG	SEP
1	.01	0	.26	.69	4.3	108	15	7.3	2.0	.42	.04	0
2	0	.01	.26	.69	5.0	78	14	7.3	2.4	.35	.04	0
3	0	0	.30	.80	5.0	29	14	7.0	2.2	.29	.04	0
4	0	.01	2.0	.50	10	12	14	7.3	1.8	.42	.04	0
5	.01	.01	.40	.69	10	9.7	14	7.4	1.6	.35	.02	0
6	.01	.01	.45	1.0	214	10	17	7.4	1.8	.42	.02	0
7	.01	.01	.40	.69	186	8.8	20	7.4	1.5	.35	.04	0
8	0	.01	.45	.92	76	11	21	7.4	1.3	.29	.06	0
9	0	.01	.45	2.2	37	9.2	21	7.0	1.2	.29	.04	0
10	0	.01	.40	2.4	216	9.2	19	6.3	1.0	.23	.06	0
11	0	.02	.50	1.8	358	12	17	5.7	1.2	.14	.02	0
12	0	.01	.60	1.6	116	11	18	5.1	1.2	.14	.02	0
13	0	.01	.70	1.6	64	11	17	4.6	1.0	.07	.04	.01
14	0	.80	1.0	1.6	48	11	16	4.3	1.0	.08	.04	.01
15	0	.35	1.2	1.8	35	11	15	4.3	1.2	.08	.04	.02
16	0	8.4	1.0	82	28	11	14	3.8	1.0	.14	.06	.02
17	0	4.8	.20	28	18	11	14	4.6	1.0	.18	.02	.02
18	0	2.8	.18	76	26	11	11	3.5	.92	.23	.01	.01
19	0	1.5	.14	33	29	11	12	3.1	.80	.23	.02	.01
20	0	1.0	.15	14	35	13	16	3.3	.69	.23	0	0
21	0	.70	.18	10	37	14	17	3.3	.42	.29	0	0
22	0	.60	.25	7.6	35	14	17	3.1	.35	.18	.01	0
23	0	.42	.15	6.0	36	14	16	3.1	.29	.10	.01	0
24	0	.35	.16	5.4	39	14	15	3.1	.35	.02	.01	0
25	0	.35	.17	5.4	37	13	12	3.1	.42	.01	.01	0
26	0	.35	.18	4.6	36	15	9.2	2.8	.35	.01	0	0
27	.01	.29	.50	4.3	112	15	8.4	2.6	.29	.01	0	0
28	.01	.26	1.2	4.0	306	16	8.0	2.4	.18	.01	0	0
29	.01	.26	1.5	4.0	------	16	7.6	2.2	.18	.04	0	0
30	0	.26	1.2	5.0	------	14	7.6	2.2	.29	.04	0	0
31	0	------	.92	5.4	------	14	------	2.2	------	.04	0	------
TOTAL	.07	23.61	17.45	313.68	2,158.3	556.9	436.8	144.2	29.93	5.68	.71	.10
MEAN	.002	.79	.56	10.1	77.1	18.0	14.6	4.65	1.00	.18	.023	.003
MAX	.01	8.4	2.0	82	358	108	21	7.4	2.4	.42	.06	.02
MIN	0	0	.14	.50	4.3	8.8	7.6	2.2	.18	.01	0	0
AC-FT	.1	47	35	622	4,280	1,100	866	286	59	11	1.4	.2

CAL YR 1972 TOTAL 646.49 MEAN 1.77 MAX 13 MIN 0 AC-FT 1,280
WTR YR 1973 TOTAL 3,687.43 MEAN 10.1 MAX 358 MIN 0 AC-FT 7,310

PEAK DISCHARGE (BASE, 50 CFS)

DATE	TIME	G.H.	DISCHARGE	DATE	TIME	G.H.	DISCHARGE
1-16	1800	3.48	362	2-11	0300	5.37	1,660
1-18	1530	3.03	204	2-27	2300	3.98	585
2-6	2230	3.48	362				

NOTE.--No gage-height record Nov. 28 to Dec. 30.

11109200 MIDDLE FORK LOCKWOOD CREEK NEAR STAUFFER, CALIF.

LOCATION.--Lat 34°45'56", long 119°07'12", in SW¼NE¼SE¼ sec.20, T.8 N., R.21 W., Ventura County, on right bank 3.3 miles upstream from Lockwood Creek, and 3.3 miles northwest of Stauffer.

DRAINAGE AREA.--5.50 sq mi.

PERIOD OF RECORD.--October 1971 to current year.

GAGE.--Water-stage recorder. Altitude of gage is 5,530 ft (from topographic map).

EXTREMES.--Current year: Maximum discharge, probably occurred Feb. 11 (discharge not determined); no flow Oct. 1.
Period of record: Maximum discharge, 500 cfs June 7, 1972 (gage height, 4.60 ft), from rating curve extended above 13 cfs on basis of slope-area measurement of maximum flow; no flow for some days in each year.

REMARKS.--Records fair. No regulation or diversion above station.

COOPERATION.--Nine discharge measurements furnished by Ventura County Flood District.

DISCHARGE, IN CUBIC FEET PER SECOND, WATER YEAR OCTOBER 1972 TO SEPTEMBER 1973

DAY	OCT	NOV	DEC	JAN	FEB	MAR	APR	MAY	JUN	JUL	AUG	SEP
1	0	.03	.07	.09	.60	3.4	3.1	3.2	.78	.22	.03	.04
2	3.2	.03	.06	.08	.70	3.2	2.5	3.0	.77	.22	.04	.04
3	.67	.03	.08	.07	1.1	3.3	2.2	3.0	.76	.22	.05	.03
4	.05	.35	3.9	.06	.70	2.9	2.5	3.2	.75	.19	.10	.04
5	.05	.03	.30	.05	1.0	2.3	3.3	2.9	.74	.19	.09	.05
6	.03	.03	.25	.05	2.8	2.1	3.8	2.4	.73	.16	.07	.03
7	.05	.03	.20	.09	1.1	1.9	4.6	2.5	.72	.16	.08	.03
8	.05	.03	.18	.62	1.6	1.6	4.5	1.9	.70	.16	.08	.02
9	.05	.03	.17	.41	1.7	1.4	4.6	2.4	.70	.13	.06	.01
10	.05	.03	.15	.22	1.7	1.2	4.9	2.2	.62	.13	.05	.01
11	.05	.16	.13	.21	60	1.1	5.6	2.0	.62	.12	.06	.01
12	.05	.62	.15	.22	1.6	1.0	6.2	2.0	.62	.12	.05	.01
13	.05	.09	.16	.19	1.4	.87	5.4	1.9	.62	.12	.05	.01
14	.05	4.1	.18	.16	1.2	1.1	4.7	1.9	.62	.12	.08	.01
15	.05	.78	.21	.16	1.0	1.0	4.3	1.6	.62	.12	.05	.01
16	.09	.41	.26	3.4	.98	.95	4.6	1.3	.48	.13	.04	.01
17	.09	.30	.29	3.7	.75	.94	5.5	1.3	.48	.13	.03	.01
18	.09	.35	.30	.78	.68	.93	4.3	1.2	.41	.12	.04	.01
19	.09	.22	.25	1.2	.83	1.0	3.8	1.1	.41	.12	.04	.01
20	.09	.20	.19	2.7	.87	1.2	3.4	1.0	.41	.11	.04	.01
21	.05	.70	.13	2.0	.98	2.0	3.3	.98	.35	.11	.04	.01
22	.05	.19	.09	1.3	.89	2.2	3.6	.98	.35	.11	.03	.01
23	.05	.19	.03	.98	.88	2.7	4.6	.98	.35	.10	.03	.01
24	.03	.30	.03	.65	.93	1.8	5.5	.78	.35	.08	.03	.02
25	.03	.16	.03	.38	.92	1.6	5.5	.78	.30	.06	.05	.02
26	.03	.22	.03	.25	.95	1.4	5.4	.78	.26	.06	.06	.01
27	.03	.22	.07	.18	1.3	1.3	5.1	.70	.26	.06	.08	.01
28	.03	.16	.22	.16	2.5	1.3	4.8	.62	.26	.06	.06	.01
29	.03	.13	1.2	.16	------	1.5	4.1	.62	.26	.05	.05	.01
30	.03	.10	.11	.16	------	2.5	3.5	.88	.22	.05	.04	.01
31	.05	------	.10	.16	------	3.1	------	.78	------	.04	.04	------
TOTAL	5.31	10.22	9.52	20.84	91.66	54.79	129.2	50.88	15.52	3.77	1.64	.52
MEAN	.17	.34	.31	.67	3.27	1.77	4.31	1.64	.52	.12	.053	.017
MAX	3.2	4.1	3.9	3.7	60	3.4	6.2	3.2	.78	.22	.10	.05
MIN	0	.03	.03	.05	.60	.87	2.2	.62	.22	.04	.03	.01
AC-FT	11	20	19	41	182	109	256	101	31	7.5	3.3	1.0

CAL YR 1972 TOTAL 104.28 MEAN .29 MAX 30 MIN 0 AC-FT 207
WTR YR 1973 TOTAL 393.87 MEAN 1.08 MAX 60 MIN 0 AC-FT 781

PEAK DISCHARGE (BASE, 100 CFS).--Feb. 11 (time and discharge unknown).

NOTE.--No gage-height record Jan. 26 to Feb. 15.

11109250 LOCKWOOD CREEK AT GORGE, NEAR STAUFFER, CALIF.

LOCATION.--Lat 34°43'57", long 119°02'14", in SE¼SW¼SE¼ sec.31, T.8 N., R.20 W., Ventura County, on right bank 2.1 miles southeast of Stauffer, and 3.8 miles upstream from Piru Creek.

DRAINAGE AREA.--58.7 sq mi.

PERIOD OF RECORD.--October 1971 to current year.

GAGE.--Water-stage recorder. Altitude of gage is 4,790 ft (from topographic map).

EXTREMES.--Current year: Maximum discharge, 958 cfs Feb. 11 (gage height, 4.83 ft), from rating curve extended as explained below; minimum daily, 1.8 cfs Aug. 12.
Period of record: Maximum discharge, 958 cfs Feb. 11, 1973 (gage height, 4.83 ft), from rating curve extended above 34 cfs on basis of slope-area measurement at gage height 2.56 ft; minimum daily, 1.8 cfs July 19, Aug. 24, 1972, Aug. 12, 1973.

REMARKS.--Records good. No regulation or diversion above station; some pumping from wells along stream.

COOPERATION.--Seventeen discharge measurements furnished by Ventura County Flood Control District.

DISCHARGE, IN CUBIC FEET PER SECOND, WATER YEAR OCTOBER 1972 TO SEPTEMBER 1973

DAY	OCT	NOV	DEC	JAN	FEB	MAR	APR	MAY	JUN	JUL	AUG	SEP
1	3.2	1.9	2.1	2.2	2.6	22	8.4	10	3.7	2.3	2.2	2.7
2	3.1	1.9	2.1	2.2	2.6	15	7.8	11	3.7	2.2	2.3	3.0
3	2.9	1.9	2.2	2.3	2.7	10	8.0	11	3.5	2.2	2.3	2.7
4	2.6	2.2	4.8	2.3	2.8	10	8.3	11	3.2	2.2	2.4	2.5
5	2.6	2.2	3.7	2.3	3.5	9.9	9.0	11	3.1	1.9	2.5	2.5
6	2.5	2.3	3.1	2.3	48	10	11	11	3.1	2.1	2.4	2.4
7	2.5	2.3	2.6	2.3	20	10	14	11	4.3	2.3	2.4	2.2
8	2.5	2.5	2.6	2.6	14	10	14	11	3.3	2.6	2.4	2.3
9	2.5	2.6	2.5	3.0	11	8.5	14	12	3.3	2.7	2.2	2.3
10	2.5	2.5	2.3	2.3	47	8.5	13	11	3.3	2.8	2.2	2.4
11	2.6	2.6	2.3	2.3	646	16	13	11	3.3	2.6	2.1	2.3
12	2.6	2.5	2.2	2.5	286	12	14	10	3.4	2.7	1.8	2.3
13	2.6	2.3	2.2	2.3	39	10	14	9.5	3.3	2.7	1.9	2.3
14	2.7	3.5	2.2	2.3	22	11	13	9.9	3.5	2.8	2.0	2.3
15	2.7	2.8	2.2	2.3	20	9.1	10	9.0	3.7	2.9	2.2	2.3
16	2.7	3.7	2.1	10	18	8.1	9.0	7.9	3.5	2.8	2.1	2.3
17	2.7	3.3	2.2	28	15	7.9	10	7.1	2.9	2.7	2.2	2.4
18	2.7	2.3	2.2	22	16	7.9	11	6.7	2.6	2.5	2.2	2.7
19	2.7	1.9	2.2	20	15	8.0	10	6.2	2.6	2.5	2.3	2.7
20	2.6	2.1	2.1	14	13	12	9.3	5.7	2.6	2.4	2.4	2.7
21	2.5	2.8	2.2	11	12	12	9.0	5.5	2.6	2.6	2.4	2.6
22	2.5	2.2	2.2	6.5	11	12	9.0	5.0	2.6	2.7	2.3	2.6
23	2.5	2.2	2.2	3.1	11	20	10	4.9	2.5	2.5	2.3	2.6
24	2.5	2.2	2.2	3.0	11	19	12	4.4	2.3	2.4	2.3	2.5
25	2.5	2.2	2.2	2.9	12	19	14	4.3	2.3	2.3	2.5	2.4
26	2.5	2.2	2.3	2.9	12	16	15	4.2	2.5	2.3	2.8	2.6
27	2.4	2.3	2.2	2.8	77	13	16	4.0	2.5	2.3	2.9	2.5
28	2.5	2.2	2.3	2.8	143	11	15	3.7	2.5	2.3	2.8	2.5
29	2.2	2.2	2.2	2.8	------	9.0	15	3.5	2.3	2.3	2.7	2.6
30	1.9	2.2	2.2	2.8	------	7.5	12	3.6	2.3	2.3	2.7	2.6
31	2.0	------	2.2	2.8	------	7.8	------	3.8	------	2.3	2.6	------
TOTAL	79.5	72.0	74.3	172.9	1,533.2	362.2	347.8	239.9	90.3	76.2	72.8	74.8
MEAN	2.56	2.40	2.40	5.58	54.8	11.7	11.6	7.74	3.01	2.46	2.35	2.49
MAX	3.2	3.7	4.8	28	646	22	16	12	4.3	2.9	2.9	3.0
MIN	1.9	1.9	2.1	2.2	2.6	7.5	7.8	3.5	2.3	1.9	1.8	2.2
AC-FT	158	143	147	343	3,040	718	690	476	179	151	144	148

CAL YR 1972 TOTAL 1,074.8 MEAN 2.94 MAX 7.1 MIN 1.8 AC-FT 2,130
WTR YR 1973 TOTAL 3,195.9 MEAN 8.76 MAX 646 MIN 1.8 AC-FT 6,340

PEAK DISCHARGE (BASE, 100 CFS)

DATE	TIME	G.H.	DISCHARGE	DATE	TIME	G.H.	DISCHARGE
2-6	2015	2.74	103	2-27	2130	3.63	357
2-11	0500	4.83	958				

11109600 PIRU CREEK ABOVE LAKE PIRU, CALIF.

LOCATION.--Lat 34°31'23", long 118°45'22", in SW¼NE¼NW¼ sec.15, T.5 N., R.18 W., Ventura County, on left bank near Blue Point, 1.3 miles downstream from Agua Blanca Creek, 4.3 miles upstream from Santa Felicia Dam, and 8.0 miles northeast of Piru. Prior to Dec. 15, 1972, at site 0.3 mile upstream.

DRAINAGE AREA.--372 sq mi.

PERIOD OF RECORD.--October 1955 to current year.

GAGE.--Water-stage recorder. Datum of gage is 1,060 ft above mean sea level (from topographic map). Prior to Dec. 15, 1972, at site 0.3 mile upstream at different datum.

AVERAGE DISCHARGE.--16 years (1955-71), 55.1 cfs (39,920 acre-ft per year).

EXTREMES.--Current year: Maximum discharge, 7,530 cfs Feb. 11 (gage height, 6.49 ft), from rating curve extended above 400 cfs; minimum daily, 0.46 cfs Oct. 1.
Period of record: Maximum discharge, 31,200 cfs Feb. 25, 1969 (gage height, 18.6 ft, site and datum then in use, from floodmark), from rating curve extended above 4,000 cfs on basis of slope-area measurement at gage height 12.2 ft and inflow-outflow records for Lake Piru; no flow for several months in most years.
Flood of Mar. 2, 1938, 35,000 cfs, is the greatest since that date.

REMARKS.--Records poor. Flow regulated beginning December 1971 by Pyramid Dam (capacity, 173,500 acre-ft) 15 miles upstream. Imported water from the California Water Project stored behind and released from Pyramid Dam. No diversion above station. Records of chemical analyses for the current year are published in Part 2 of this report.

DISCHARGE, IN CUBIC FEET PER SECOND, WATER YEAR OCTOBER 1972 TO SEPTEMBER 1973

DAY	OCT	NOV	DEC	JAN	FEB	MAR	APR	MAY	JUN	JUL	AUG	SEP
1	.46	2.5	19	6.5	22	536	105	67	26	15	11	4.5
2	.56	12	19	6.6	22	450	105	60	24	15	13	4.5
3	.68	2.3	19	7.0	36	438	105	58	23	14	12	4.5
4	.65	1.8	27	7.0	73	438	102	28	23	13	11	4.5
5	1.6	2.1	20	6.6	45	432	102	21	22	13	9.0	4.5
6	1.5	2.1	12	6.6	256	456	102	33	22	13	9.0	4.5
7	.92	4.4	10	6.6	520	378	102	16	22	13	9.0	4.5
8	1.1	6.8	9.0	7.0	326	275	110	20	22	11	9.0	4.4
9	2.7	6.8	8.2	13	225	240	110	32	22	13	9.0	4.3
10	2.5	7.2	7.8	9.1	433	224	87	51	21	12	9.0	4.2
11	2.1	5.0	7.4	8.1	2,290	325	91	47	21	13	9.0	4.1
12	1.9	2.8	7.2	7.7	1,350	224	100	45	19	13	9.0	4.0
13	2.6	3.0	7.2	7.4	718	138	115	37	19	13	9.0	4.0
14	2.6	95	7.0	7.4	592	110	108	28	19	14	9.0	3.8
15	2.4	45	6.8	7.4	557	100	79	25	19	14	9.0	3.8
16	2.1	110	6.5	22	468	100	77	26	19	14	8.8	3.6
17	1.3	131	6.4	52	320	100	77	27	18	14	8.8	3.4
18	1.4	50	6.4	399	305	98	75	28	18	14	8.8	3.5
19	1.4	36	6.4	268	236	98	73	28	17	14	8.8	3.4
20	1.6	30	6.4	134	105	232	72	28	17	14	8.8	3.3
21	2.0	22	6.4	102	98	132	67	28	17	14	8.6	3.2
22	1.8	22	6.4	88	112	120	48	28	16	13	8.6	3.1
23	3.0	22	6.4	78	108	150	58	28	16	10	8.6	3.0
24	3.9	21	6.4	56	102	150	61	28	16	10	8.6	2.8
25	4.3	21	6.4	52	95	165	65	28	16	11	8.6	2.8
26	4.5	21	6.4	47	93	156	70	28	16	11	8.6	2.8
27	5.2	20	6.4	39	150	141	70	28	16	11	8.2	2.8
28	3.9	20	6.5	36	656	129	63	28	16	11	7.0	2.8
29	2.1	20	6.5	34	------	123	68	28	15	13	5.0	2.8
30	2.3	19	6.5	36	------	110	100	28	15	13	4.6	2.8
31	2.3	------	6.5	29	------	108	------	28	------	11	4.5	------
TOTAL	67.37	763.8	289.5	1,586.0	10,313	6,876	2,567	1,013	572	397	270.9	110.2
MEAN	2.17	25.5	9.34	51.2	368	222	85.6	32.7	19.1	12.8	8.74	3.67
MAX	5.2	131	27	399	2,290	536	115	67	26	15	13	4.5
MIN	.46	1.8	6.4	6.5	22	98	48	16	15	10	4.5	2.8
AC-FT	134	1,510	574	3,150	20,460	13,640	5,090	2,010	1,130	787	537	219

CAL YR 1972 TOTAL 7,498.71 MEAN 20.5 MAX 210 MIN .07 AC-FT 14,870
WTR YR 1973 TOTAL 24,825.77 MEAN 68.0 MAX 2,290 MIN .46 AC-FT 49,240

11109700 LAKE PIRU NEAR PIRU, CALIF.

LOCATION.--Lat 34°27'52", long 118°44'57", in Temescal Grant, Ventura County, at Santa Felicia Dam on Piru Creek, on left bank 1,000 ft upstream from left end of dam, 0.5 mile downstream from Santa Felicia Canyon, and 4.2 miles northeast of Piru.

DRAINAGE AREA.--425 sq mi.

PERIOD OF RECORD.--May 1955 to current year.

GAGE.--Nonrecording gage. Datum of gage is at mean sea level (levels by United Water Conservation District). Prior to Jan. 27, 1956, reference point at intake tower at same datum.

EXTREMES.--Current year: Maximum contents, 65,540 acre-ft May 1-4 (elevation, 1,022.75 ft); minimum, 14,620 acre-ft Nov. 2-9 (elevation, 954.75 ft).
Period of record: Maximum contents observed, 109,400 acre-ft Feb. 25, 1969 (elevation, 1,061.45 ft); lake dry Oct. 25 to Nov. 20, 1961.

REMARKS.--Lake is formed by earthfill dam. Storage began May 20, 1955. Capacity table is based on surveys made in 1949 and 1956. Dead storage below two 24-inch sluice gates (elevation, 880.0 ft), 74 acre-ft, included in contents. Capacity below spillway level (elevation, 1,055.0 ft), 101,225 acre-ft. Flow regulated since December 1971 by Pyramid Dam (capacity, 173,500 acre-ft). Imported water from the California Water Project stored behind and released from Pyramid Dam. Water is released from outlet to Piru Creek for ground-water recharge, domestic use, and irrigation on the Oxnard plain.

COOPERATION.--Elevations furnished by United Water Conservation District.

MONTHEND ELEVATION AND CONTENTS, WATER YEAR OCTOBER 1972 TO SEPTEMBER 1973

Date	Elevation (feet)a	Contents (acre-feet)	Change in contents (acre-feet)
Sept. 30	955.10	14,780	--
Oct. 31	954.80	14,640	-140
Nov. 30	958.70	16,530	+1,890
Dec. 31	960.15	17,270	+740
CAL YR 1972	--	--	-11,720
Jan. 31	968.15	21,800	+4,530
Feb. 28	1,004.85	48,980	+27,180
Mar. 31	1,020.80	63,620	+14,640
Apr. 30	1,022.70	65,490	+1,870
May 31	1,020.45	63,280	-2,210
June 30	1,018.65	61,540	-1,740
July 31	1,004.00	48,250	-13,290
Aug. 31	988.75	36,030	-12,220
Sept. 30	968.35	21,920	-14,110
WTR YR 1973	--	--	+7,140

a Elevation at 0800.

11110000 PIRU CREEK NEAR PIRU, CALIF.

LOCATION.--Lat 34°25'30", long 118°45'40", in southern part of Temescal Grant, Ventura County, on right bank 1.8 miles northeast of Piru, and 2 miles upstream from mouth.

DRAINAGE AREA.--437 sq mi.

PERIOD OF RECORD.--October 1911 to September 1913, October 1927 to April 1955, May 1955 to current year. Published as "at Piru" 1927-34 and as "below Santa Felicia Dam" May 1955 to September 1968. Records not equivalent prior to May 20, 1955, due to regulation by Lake Piru.

GAGE.--Water-stage recorder. Broad-crested weir since Oct. 20, 1940. Altitude of gage is 750 ft (from topographic map). See WSP 1315-B for history of changes prior to Feb. 20, 1939. Feb. 20, 1939, to Dec. 2, 1969, at datum 1.00 ft higher.

AVERAGE DISCHARGE.--29 years (1927-56), 54.8 cfs (39,700 acre-ft per year).

EXTREMES.--Current year: Maximum discharge, 295 cfs June 27 (gage height, 4.50 ft); minimum daily, 1.2 cfs Dec. 26.

1912-13, 1927-56: Maximum discharge, 35,600 cfs Mar. 2, 1938 (gage height, 14.0 ft, site and datum then in use), from rating curve extended above 750 cfs on basis of slope-area measurement of maximum flow; no flow at times in some years.

1957 to current year: Maximum discharge, 28,800 cfs Feb. 25, 1969 (gage height, 15.9 ft), from rating curve extended above 6,400 cfs on basis of computation of peak flow over dam; no flow at times in some years.

REMARKS.--Records good. Flow regulated beginning in May 1955 by Lake Piru 2.8 miles upstream (see sta 11109700) and since December 1971 by Pyramid Lake (capacity, 173,500 acre-ft). Imported water from California Water Project stored and released at Pyramid Dam. No diversion above station. Records of chemical analyses for the current year are published in Part 2 of this report.

DISCHARGE, IN CUBIC FEET PER SECOND, WATER YEAR OCTOBER 1972 TO SEPTEMBER 1973

DAY	OCT	NOV	DEC	JAN	FEB	MAR	APR	MAY	JUN	JUL	AUG	SEP
1	15	4.8	1.6	5.3	1.4	2.7	1.3	68	30	232	157	232
2	14	4.8	1.7	5.6	1.4	2.4	19	68	10	157	188	232
3	14	4.8	4.8	5.5	2.0	2.3	56	66	9.2	80	190	232
4	14	4.8	7.7	5.1	1.8	2.2	61	65	9.0	232	190	232
5	13	4.8	2.8	5.1	2.3	2.2	65	66	32	232	190	232
6	13	4.8	2.5	5.3	6.2	3.7	66	66	9.6	229	188	229
7	13	4.8	2.8	5.3	3.5	2.5	66	66	9.2	229	188	226
8	13	4.8	2.2	5.5	2.5	6.6	66	66	9.0	226	188	223
9	13	4.8	2.0	6.6	2.0	2.7	66	66	9.0	226	188	217
10	11	5.0	1.9	2.4	14	2.4	67	66	8.8	223	185	214
11	5.8	7.1	1.8	1.9	60	4.3	67	66	8.8	223	185	211
12	5.8	6.8	1.7	1.7	11	2.5	67	67	9.0	223	188	208
13	6.0	6.8	1.7	1.6	9.0	2.3	68	67	8.3	223	188	208
14	6.3	11	1.6	1.5	4.6	2.0	68	68	7.3	220	188	208
15	6.4	3.8	1.6	1.5	3.8	2.3	68	68	6.8	220	193	205
16	6.6	4.3	1.5	11	3.5	1.8	68	68	6.6	202	196	205
17	6.5	4.8	1.5	3.2	3.1	1.8	69	69	6.9	188	199	205
18	6.3	3.2	1.5	21	2.8	1.7	67	69	6.8	188	199	205
19	6.3	2.8	1.5	4.0	2.7	1.7	66	70	6.6	188	202	205
20	6.4	2.4	1.4	2.7	2.5	6.0	66	70	6.6	188	202	205
21	2.7	2.3	1.4	2.3	2.4	3.4	66	70	6.6	188	205	205
22	2.1	2.2	1.4	2.0	2.4	2.3	66	70	6.6	188	205	205
23	1.8	2.0	1.4	1.8	2.4	1.9	67	70	6.4	188	208	205
24	1.5	1.9	1.4	1.8	2.7	1.8	67	70	6.4	188	208	202
25	4.2	1.9	1.3	1.7	2.4	1.6	68	71	6.4	188	211	202
26	4.8	1.8	1.2	1.7	2.3	1.6	68	70	6.8	188	214	199
27	4.8	1.7	1.3	1.5	3.4	1.6	68	69	72	188	214	199
28	4.8	1.7	1.3	1.4	4.3	1.6	69	69	277	188	205	202
29	4.8	1.6	1.3	1.5	------	1.5	69	69	268	183	238	202
30	4.8	1.6	1.3	1.6	------	1.4	68	64	229	188	232	202
31	4.8	------	4.8	1.7	------	1.4	------	69	------	188	232	------
TOTAL	236.5	119.9	63.9	120.8	162.4	76.2	1,883.3	2,106	1,094.7	6,192	6,164	6,357
MEAN	7.63	4.00	2.06	3.90	5.80	2.46	62.8	67.9	36.5	200	199	212
MAX	15	11	7.7	21	60	6.6	69	71	277	232	238	232
MIN	1.5	1.6	1.2	1.4	1.4	1.4	1.3	64	6.4	80	157	199
AC-FT	469	238	127	240	322	151	3,740	4,180	2,170	12,280	12,230	12,610

CAL YR 1972 TOTAL 12,428.6 MEAN 34.0 MAX 474 MIN 1.2 AC-FT 24,650
WTR YR 1973 TOTAL 24,576.7 MEAN 67.3 MAX 277 MIN 1.2 AC-FT 48,750

11110500 HOPPER CREEK NEAR PIRU, CALIF.

LOCATION.--Lat 34°24'03", long 118°49'32", in NE¼NE¼SW¼ sec.25, T.4 N., R.19 W., Ventura County, on downstream end of center pier of bridge on State Highway 126, 1 mile upstream from mouth, and 2.1 miles southwest of Piru.

DRAINAGE AREA.--23.6 sq mi.

PERIOD OF RECORD.--October 1930 to September 1932, October 1933 to September 1936, October 1937 to current year.

GAGE.--Water-stage recorder. Concrete control since October 1967. Altitude of gage is 590 ft (from topographic map).

AVERAGE DISCHARGE.--41 years, 5.54 cfs (4,010 acre-ft per year).

EXTREMES.--Current year: Maximum discharge, 1,670 cfs Feb. 11 (gage height, 8.06 ft); no flow many days.
Period of record: Maximum discharge, 8,400 cfs Jan. 25, 1969 (gage height, 12.72 ft, from floodmark), from rating curve extended above 850 cfs on basis of slope-area measurement of maximum flow; no flow for several months in most years.

REMARKS.--No regulation above station. Some pumping along stream for irrigation.

COOPERATION.--Records furnished by Ventura County Flood Control District and reviewed by Geological Survey.

DISCHARGE, IN CUBIC FEET PER SECOND, WATER YEAR OCTOBER 1972 TO SEPTEMBER 1973

DAY	OCT	NOV	DEC	JAN	FEB	MAR	APR	MAY	JUN	JUL	AUG	SEP
1	0	.12	0	.06	0	13	3.8	1.8	.56	.02		
2	0	.12	0	.08	0	9.0	4.1	1.4	.49	.01		
3	0	.12	0	.08	2.0	6.2	3.5	1.0	.42	0		
4	0	.15	2.3	.10	17	5.3	3.2	.94	.26	0		
5	0	.18	.26	.08	2.7	4.5	3.2	1.0	.17	0		
6	0	.15	.81	.09	114	13	3.2	1.0	.04	0		
7	0	.18	1.2	.09	195	11	3.2	1.0	.02	.01		
8	0	.18	.42	.22	9.6	19	3.0	.73	.01	.01		
9	0	.12	.26	4.2	4.1	13	3.2	.56	.01	.01		
10	0	.15	.22	1.2	297	6.7	3.2	.42	.02	.01		
11	0	2.8	.15	.49	557	63	3.2	.42	.03	.01		
12	0	.64	.07	.31	51	11	3.2	.56	.04	.01		
13	0	.42	.06	.31	112	8.4	3.0	.56	.06	.01		
14	0	44	.04	.31	37	6.7	3.0	.64	.14	.01		
15	0	1.4	.04	.31	16	5.7	2.7	.56	.15	.01		
16	0	12	.02	71	15	5.7	2.7	.49	.18	.01		
17	0	48	.04	18	11	5.3	2.7	.36	.93	.01		
18	7.1	1.5	.03	235	10	4.9	2.4	.31	.70	.01		
19	2.6	.03	.05	73	9.6	4.5	2.4	.56	.32	.01		
20	.56	0	.04	.30	8.4	61	2.0	.94	.01	.01		
21	.56	0	.06	0	6.2	32	2.0	.94	0	.01		
22	.42	0	.10	0	6.2	34	1.8	.83	0	.01		
23	.42	0	.07	0	5.7	11	1.8	.73	0	.01		
24	.36	0	.04	0	6.7	6.7	1.8	.73	0	0		
25	.26	0	0	0	6.7	6.2	1.8	1.0	0	0		
26	.31	0	.02	0	5.7	6.2	1.8	.94	0	0		
27	.36	0	.12	0	55	6.2	1.5	.42	0	0		
28	.31	0	.15	0	157	6.2	1.8	.12	0	0		
29	.22	0	.18	0	------	5.3	2.2	.08	0	0		
30	.18	0	.18	0	------	4.5	2.2	.08	.02	0		
31	.15	------	.15	0	------	4.1	------	.26	------	0		------
TOTAL	13.81	112.26	7.08	405.23	1,717.6	399.3	79.6	21.38	4.58	.20	0	0
MEAN	.45	3.74	.23	13.1	61.3	12.9	2.65	.69	.15	.007	0	0
MAX	7.1	48	2.3	235	557	63	4.1	1.8	.93	.02	0	0
MIN	0	0	0	0	0	4.1	1.5	.08	0	0	0	0
AC-FT	27	223	14	804	3,410	792	158	42	9.1	.4	0	0

CAL YR 1972 TOTAL 227.81 MEAN .62 MAX 48 MIN 0 AC-FT 452
WTR YR 1973 TOTAL 2,761.04 MEAN 7.56 MAX 557 MIN 0 AC-FT 5,480

PEAK DISCHARGE (BASE, 150 CFS)

DATE	TIME	G.H.	DISCHARGE	DATE	TIME	G.H.	DISCHARGE
11-14	1015	6.46	414	2-11	0445	8.06	1,670
11-17	0730	6.10	240	2-27	2330	6.84	663
1-16	1900	6.56	504	3-11	1015	6.08	282
1-18	1600	7.60	1,420	3-20	0645	6.64	504
2-7	0100	7.00	810				

11111500 SESPE CREEK NEAR WHEELER SPRINGS, CALIF.

LOCATION.--Lat 34°34'40", long 119°15'25", in SE¼NW¼SW¼ sec.30, T.6 N., R.22 W., Ventura County, on right bank at Sespe Gorge, 1.6 miles upstream from Tule Creek, 5 miles upstream from Cold Springs damsite, and 5 miles northeast of Wheeler Springs.

DRAINAGE AREA.--49.5 sq mi.

PERIOD OF RECORD.--October 1947 to current year. Daily discharge for period October 1947 to July 1948 estimated on basis of weather records and records for North Fork Matilija Creek.

GAGE.--Water-stage recorder. Datum of gage is 3,500.65 ft above mean sea level (levels by Ventura County Flood Control District).

AVERAGE DISCHARGE.--26 years (1947-73), 10.6 cfs (7,680 acre-ft per year).

EXTREMES.--Current year: Maximum discharge, 2,960 cfs Feb. 11 (gage height, 8.90 ft); minimum daily, 0.06 cfs Oct. 7.
Period of record: Maximum discharge, 9,700 cfs Jan. 25, 1969 (gage height, 13.60 ft), from rating curve extended above 3,000 cfs on basis of slope-area measurement of maximum flow; no flow many days in most years.

REMARKS.--Records good. No regulation or diversion above station. Records of water temperatures for the current year are published in Part 2 of this report.

DISCHARGE, IN CUBIC FEET PER SECOND, WATER YEAR OCTOBER 1972 TO SEPTEMBER 1973

DAY	OCT	NOV	DEC	JAN	FEB	MAR	APR	MAY	JUN	JUL	AUG	SEP
1	.11	.43	1.2	1.7	3.2	109	32	11	5.4	.55	.32	.24
2	.16	.43	1.2	1.7	3.2	76	29	10	5.7	.54	.31	.30
3	.16	.43	1.3	1.5	4.0	65	28	10	5.1	.53	.30	.30
4	.16	.53	1.3	1.5	12	60	26	10	4.5	.52	.44	.30
5	.16	.53	1.3	1.5	12	52	24	10	4.0	.51	.37	.30
6	.11	.53	1.3	1.5	364	51	24	9.8	3.7	.50	.30	.24
7	.06	.64	1.3	1.5	211	48	23	9.6	3.7	.49	.30	.30
8	.11	.64	1.3	1.5	94	83	21	9.6	3.4	.48	.30	.24
9	.16	.53	1.3	2.9	68	50	20	9.6	3.2	.47	.24	.24
10	.16	.53	1.3	2.2	159	45	20	9.6	3.0	.46	.24	.24
11	.16	.88	1.3	1.9	1,030	48	18	9.2	3.0	.45	.24	.19
12	.16	.75	1.3	1.9	218	44	18	8.4	2.8	.44	.24	.19
13	.16	.75	1.3	1.9	160	42	18	8.0	2.8	.43	.24	.14
14	.21	6.9	1.3	1.9	124	40	17	7.7	3.2	.42	.19	.24
15	.21	2.4	1.3	1.9	94	36	16	7.3	2.4	.41	.19	.30
16	.21	13	1.3	14	70	34	16	7.3	2.8	.40	.14	.30
17	.21	9.5	1.3	15	58	32	16	7.0	2.8	.39	.14	.37
18	.21	4.8	1.3	120	48	31	16	7.7	2.6	.39	.14	.30
19	.21	3.2	1.3	40	48	30	16	7.8	2.2	.38	.14	.30
20	.21	2.4	1.3	10	47	59	14	8.4	2.0	.38	.19	.30
21	.21	2.2	1.3	7.7	46	51	14	7.3	1.6	.37	.14	.37
22	.21	1.7	1.3	5.7	45	53	14	6.6	1.5	.37	.19	.37
23	.21	1.7	1.3	5.4	44	48	13	6.3	1.3	.37	.24	.37
24	.21	1.5	1.3	4.8	48	47	13	6.3	1.2	.36	.30	.37
25	.21	1.5	1.3	4.5	43	45	13	6.0	1.0	.36	.30	.30
26	.21	1.5	1.3	4.2	40	44	12	5.7	.82	.36	.24	.24
27	.21	1.5	1.5	4.0	119	41	12	5.7	.63	.35	.24	.30
28	.21	1.3	1.9	3.7	184	39	11	5.7	.60	.35	.24	.30
29	.28	1.3	1.9	3.7	------	37	11	4.8	.58	.35	.24	.24
30	.35	1.2	1.7	3.4	------	34	11	4.8	.56	.34	.24	.24
31	.43	------	1.7	3.4	------	32	------	5.1	------	.33	.24	------
TOTAL	6.04	65.20	42.3	276.5	3,396.4	1,506	536	242.3	78.09	13.05	7.58	8.43
MEAN	.19	2.17	1.36	8.92	121	48.6	17.9	7.82	2.60	.42	.24	.28
MAX	.43	13	1.9	120	1,030	109	32	11	5.7	.55	.44	.37
MIN	.06	.43	1.2	1.5	3.2	30	11	4.8	.56	.33	.14	.14
AC-FT	12	129	84	548	6,740	2,990	1,060	481	155	26	15	17

CAL YR 1972 TOTAL 716.63 MEAN 1.96 MAX 13 MIN .06 AC-FT 1,420
WTR YR 1973 TOTAL 6,177.89 MEAN 16.9 MAX 1,030 MIN .06 AC-FT 12,250

PEAK DISCHARGE (BASE, 50 CFS)

DATE	TIME	G.H.	DISCHARGE	DATE	TIME	G.H.	DISCHARGE
1-16	2230	2.96	61	2-11	0600	8.90	2,960
1-18	1900	4.74	462	2-27	2200	4.60	420
2-6	2030	6.34	1,150	3-20	1600	2.65	66

NOTE.--No gage-height record June 28 to Aug. 2.

11113000 SESPE CREEK NEAR FILLMORE, CALIF.

LOCATION.--Lat 34°27'03", long 118°55'30", in NE¼NW¼NE¼ sec.12, T.4 N., R.20 W., Ventura County, on right bank 0.1 mile downstream from Little Sespe Creek, and 3.5 miles north of Fillmore.

DRAINAGE AREA.--251 sq mi.

PERIOD OF RECORD.--September 1911 to September 1913, October 1927 to current year; combined records of creek and canal, October 1927 to current year. Prior to 1935, published as "at Sespe."

GAGE.--Water-stage recorder on creek; water-stage recorder and Parshall flume on canal. Altitude of gage is 580 ft (from topographic map). See WSP 1315-B for history of changes prior to Jan. 17, 1946.

AVERAGE DISCHARGE (Creek only).--48 years, 106 cfs (76,800 acre-ft per year).
(Combined creek and canal).--46 years, 111 cfs (80,420 acre-ft per year).

EXTREMES (Creek only).--Current year: Maximum discharge, 38,300 cfs Feb. 11 (gage height, 20.82 ft); minimum daily, 0.25 cfs Oct. 10-13.
Period of record: Maximum discharge, 60,000 cfs Jan. 25, 1969 (gage height, 20.80 ft), from rating curve extended above 22,000 cfs on basis of slope-area measurement at gage height 19.0 ft; maximum gage height, 24.95 ft Feb. 25, 1969 (from debris wave); no flow at times in some years.
(Combined flow).--Current year: Maximum discharge, 38,300 cfs Feb. 11; minimum daily, 4.0 cfs Oct. 18.
Period of record: Maximum discharge, 60,000 cfs Jan. 25, 1969; minimum daily, 1.1 cfs July 31, Aug. 2, 1951.

REMARKS.--Records good. No regulation above station. Fillmore Irrigation Co. has diverted water one mile upstream since September 1911. Records of chemical analyses and suspended-sediment discharge for the current year are published in Part 2 of this report. For records of combined discharge of Sespe Creek and Fillmore Irrigation Co.'s canal, see following page.

DISCHARGE, IN CUBIC FEET PER SECOND, WATER YEAR OCTOBER 1972 TO SEPTEMBER 1973

DAY	OCT	NOV	DEC	JAN	FEB	MAR	APR	MAY	JUN	JUL	AUG	SEP
1	.29	1.5	17	14	56	1,130	218	103	43	12	5.9	3.5
2	.29	1.4	17	14	53	678	210	91	41	11	6.4	3.4
3	.29	1.3	17	14	58	500	197	85	41	12	7.6	3.4
4	.29	1.2	27	14	136	411	189	82	40	11	7.9	3.4
5	.33	.96	24	14	115	338	185	78	38	11	8.3	3.4
6	.43	.78	27	11	3,420	352	185	76	35	11	8.3	3.4
7	.43	.69	27	11	6,260	390	195	74	34	11	4.6	3.2
8	.33	.61	23	12	914	416	201	68	30	11	3.1	3.1
9	.29	.54	20	39	563	376	186	64	27	12	2.8	3.1
10	.25	.48	20	27	5,980	292	177	61	27	12	2.6	2.7
11	.25	9.4	18	23	18,500	526	176	59	27	12	2.6	2.5
12	.25	6.8	17	20	3,460	406	180	57	26	11	3.9	2.4
13	.25	6.8	17	18	1,550	314	179	56	26	11	3.5	2.4
14	.33	226	17	17	1,000	268	167	54	26	10	3.1	2.4
15	.43	95	16	17	700	232	153	56	26	11	4.1	2.3
16	.38	137	16	579	630	203	144	52	25	11	3.8	2.3
17	.38	371	16	290	539	187	138	50	24	11	2.9	2.1
18	.61	108	16	2,140	495	170	142	48	22	11	3.5	2.1
19	5.5	49	16	1,160	474	153	136	46	19	11	4.5	2.1
20	4.9	30	16	348	437	740	125	46	16	10	3.6	2.1
21	4.9	24	15	150	420	448	120	43	15	9.1	2.1	2.1
22	4.9	22	16	100	480	421	114	43	14	8.1	1.7	2.1
23	4.9	20	17	90	450	371	115	42	13	7.9	1.6	2.2
24	4.6	19	16	79	400	357	118	40	13	7.9	1.5	2.0
25	4.6	18	16	75	360	348	122	37	14	7.9	2.4	1.4
26	4.6	17	14	70	350	324	120	37	13	8.1	3.7	1.8
27	4.9	17	14	64	1,620	300	114	36	13	8.1	3.2	1.8
28	4.9	18	15	60	3,890	276	113	45	13	7.8	3.2	1.7
29	4.3	19	15	60	------	264	111	42	12	7.9	3.2	1.6
30	3.0	18	14	59	------	240	111	42	12	6.2	3.4	1.5
31	2.0	------	14	56	------	229	------	42	------	5.3	3.5	------
TOTAL	64.10	1,240.46	550	5,645	53,310	11,660	4,641	1,755	725	307.3	122.5	73.5
MEAN	2.07	41.3	17.7	182	1,904	376	155	56.6	24.2	9.91	3.95	2.45
MAX	5.5	371	27	2,140	18,500	1,130	218	103	43	12	8.3	3.5
MIN	.25	.48	14	11	53	153	111	36	12	5.3	1.5	1.4
AC-FT	127	2,460	1,090	11,200	105,700	23,130	9,210	3,480	1,440	610	243	146

CAL YR 1972 TOTAL 7,249.30 MEAN 19.8 MAX 371 MIN .18 AC-FT 14,380
WTR YR 1973 TOTAL 80,093.86 MEAN 219 MAX 18,500 MIN .25 AC-FT 158,900

PEAK DISCHARGE (BASE, 1,300 CFS)

DATE	TIME	G.H.	DISCHARGE	DATE	TIME	G.H.	DISCHARGE
1-16	1730	15.37	3,680	2-11	0525	20.82	38,300
1-18	1600	16.86	8,240	2-27	2215	16.38	8,240
2-7	0115	19.13	22,000	3-20	0515	13.48	1,480

11113000 SESPE CREEK NEAR FILLMORE, CALIF.--Continued

COMBINED DISCHARGE, IN CUBIC FEET PER SECOND, OF SESPE CREEK AND FILLMORE IRRIGATION CO.'S CANAL NEAR FILLMORE, CALIF., WATER YEAR OCTOBER 1972 TO SEPTEMBER 1973

DAY	OCT	NOV	DEC	JAN	FEB	MAR	APR	MAY	JUN	JUL	AUG	SEP
1	4.3	4.9	18	14	56	1,130	220	109	48	21	13	10
2	4.3	5.2	18	15	54	678	212	98	47	19	13	9.8
3	4.5	5.1	18	15	58	500	199	94	47	20	13	9.8
4	4.6	5.8	27	15	136	411	191	92	45	19	13	9.8
5	4.6	5.9	24	16	115	338	187	89	43	19	13	9.7
6	4.3	5.7	27	14	3,420	352	187	86	39	19	13	9.7
7	4.6	5.7	27	14	6,260	390	197	84	38	19	12	9.3
8	4.6	5.6	23	14	914	416	203	78	35	19	11	9.0
9	4.8	5.4	20	39	563	376	188	74	33	20	11	8.9
10	4.8	5.4	20	27	5,980	292	179	71	32	20	11	8.9
11	4.8	12	18	23	18,500	526	178	68	34	20	11	8.8
12	4.7	7.7	17	20	3,460	406	182	66	34	19	10	8.8
13	4.5	7.7	17	18	1,550	314	181	65	34	19	10	8.8
14	4.4	227	17	17	1,000	268	168	63	34	18	10	8.7
15	4.8	95	16	17	700	232	154	66	34	19	10	8.6
16	4.9	137	17	579	630	203	145	61	33	19	10	8.5
17	5.0	371	17	290	539	187	140	58	31	19	9.8	8.4
18	4.0	108	17	2,140	495	170	144	56	29	19	9.6	8.3
19	5.8	49	17	1,160	474	153	139	54	26	20	9.8	8.4
20	5.4	30	17	348	437	740	128	54	25	19	9.8	8.4
21	5.3	24	16	150	420	448	123	51	24	18	9.4	8.5
22	5.3	22	16	100	480	421	117	48	23	17	9.0	8.5
23	5.2	20	18	90	450	371	118	47	22	16	8.9	8.7
24	5.0	19	16	79	400	357	121	45	22	15	8.8	8.8
25	5.2	18	16	75	360	348	125	42	23	15	8.6	8.1
26	5.2	17	14	70	350	325	124	41	22	15	9.8	7.8
27	5.7	17	14	64	1,620	301	119	40	22	15	9.8	8.0
28	5.7	18	15	60	3,890	276	118	49	22	15	9.9	8.0
29	4.9	19	15	60	------	265	116	46	21	15	9.8	8.0
30	5.0	19	14	59	------	242	116	46	21	14	9.9	8.0
31	4.8	------	14	56	------	231	------	46	------	13	10	------
TOTAL	151.0	1,292.1	560	5,658	53,311	11,667	4,719	1,987	943	554	326.9	263.0
MEAN	4.87	43.1	18.1	183	1,904	376	157	64.1	31.4	17.9	10.5	8.77
MAX	5.8	371	27	2,140	18,500	1,130	220	109	48	21	13	10
MIN	4.0	4.9	14	14	54	153	116	40	21	13	8.6	7.8
AC-FT	300	2,560	1,110	11,220	105,700	23,140	9,360	3,940	1,870	1,100	648	522

CAL YR 1972 TOTAL 8,414.3 MEAN 23.0 MAX 371 MIN 3.5 AC-FT 16,690
WTR YR 1973 TOTAL 81,432.0 MEAN 223 MAX 18,500 MIN 4.0 AC-FT 161,500

PEAK DISCHARGE (BASE, 1,300 CFS).--(Same as those listed on previous page).

11113500 SANTA PAULA CREEK NEAR SANTA PAULA, CALIF.

LOCATION.--Lat 34°23'44", long 119°04'32", in NW¼SW¼SW¼ sec.27, T.4 N., R.21 W., Ventura County, on right bank 15 ft upstream from Santa Paula Water Works diversion dam, 200 ft upstream from Mud Creek, and 3 miles north of Santa Paula.

DRAINAGE AREA.--40.0 sq mi.

PERIOD OF RECORD.--October 1927 to current year. March 1912 to September 1913, at site 2.5 miles upstream; records not equivalent.

GAGE.--Water-stage recorder and concrete diversion dam control. Datum of gage is 638.59 ft above mean sea level (Corps of Engineers bench mark). Oct. 1, 1927, to Feb. 19, 1931, at site 500 ft downstream at different datum. Feb. 20, 1931, to Dec. 5, 1963, and July 30, 1965, to May 5, 1969, at datum 3.00 ft higher. Dec. 6, 1963, to July 29, 1965, at site 50 ft upstream at datum 3.00 ft higher.

AVERAGE DISCHARGE.--46 years, 48.7 cfs (15,790 acre-ft per year).

EXTREMES.--Current year: Maximum discharge, 13,400 cfs Feb. 11 (gage height, 13.3 ft, from floodmark); minimum daily, 0.54 cfs Oct. 10.
Period of record: Maximum discharge, 21,000 cfs Feb. 25, 1969 (gage height, 18.18 ft, from floodmark, present datum), from rating curve extended above 2,300 cfs on basis of critical-depth measurement at gage height 15.2 ft; no flow at times in 1949, 1951-52, 1965.

REMARKS.--Records fair except those for period of no gage-height record, which are poor. No regulation above station. Diversion above station for irrigation of 60 acres by Santa Paula Water Works began prior to October 1927; 346 acre-ft was diverted during current year. Records of chemical analyses for the current year are published in Part 2 of this report.

COOPERATION.--Records of diversion furnished by Santa Paula Water Works.

DISCHARGE, IN CUBIC FEET PER SECOND, WATER YEAR OCTOBER 1972 TO SEPTEMBER 1973

DAY	OCT	NOV	DEC	JAN	FEB	MAR	APR	MAY	JUN	JUL	AUG	SEP
1	.68	1.7	3.9	2.3	7.4	400	58	27	23	8.7	6.4	4.6
2	.99	1.7	3.9	2.3	7.0	200	56	25	23	7.7	6.4	4.6
3	1.2	1.7	3.9	2.3	6.7	150	54	25	20	7.4	6.1	4.6
4	1.2	2.3	5.7	2.3	6.5	120	53	25	16	7.7	6.4	4.4
5	1.0	2.7	4.6	2.3	20	100	52	25	16	7.4	6.4	4.4
6	.85	2.4	4.6	2.3	200	130	51	25	13	7.7	6.4	4.4
7	.80	2.3	4.6	2.3	1,000	150	50	25	12	7.4	6.4	3.9
8	1.1	2.4	3.6	2.3	100	200	49	24	12	7.4	6.4	4.1
9	.79	2.6	3.3	4.9	60	110	48	23	13	7.4	6.1	4.1
10	.54	2.9	3.3	3.6	1,000	98	47	23	14	7.1	5.8	4.4
11	.58	7.2	3.2	3.4	3,000	144	46	23	14	7.1	5.8	4.4
12	.57	5.6	3.1	3.1	1,000	138	45	23	15	7.1	5.8	4.4
13	.56	5.7	3.1	3.3	700	120	44	23	15	7.1	5.8	4.4
14	.78	37	3.1	3.3	500	112	43	23	15	6.8	5.6	3.9
15	.99	6.1	3.6	3.3	190	104	42	22	16	6.8	5.6	4.1
16	.86	16	3.3	98	120	100	41	20	16	6.8	5.3	4.4
17	.93	43	3.3	46	100	98	40	19	17	6.8	5.3	4.4
18	.80	12	3.0	493	80	96	39	19	17	6.8	5.3	4.4
19	1.7	7.8	3.0	149	70	94	37	19	17	6.8	4.8	4.4
20	1.5	6.5	3.0	50	75	240	37	19	17	6.8	4.8	4.4
21	1.1	6.1	3.0	30	80	130	36	18	17	6.8	5.1	4.4
22	1.9	6.1	3.0	20	76	110	34	18	17	7.1	4.8	4.6
23	1.5	5.7	3.3	13	70	100	33	18	17	7.1	4.8	4.8
24	1.1	5.3	2.8	11	64	94	32	20	17	6.4	4.6	4.6
25	.92	5.3	2.1	10	62	90	31	21	17	6.4	4.8	4.4
26	.84	4.9	2.3	9.0	60	84	29	21	16	6.4	4.8	4.1
27	.99	4.6	2.3	8.5	250	80	28	21	13	6.4	4.8	4.1
28	1.3	4.2	2.6	8.2	730	75	29	20	12	6.4	4.6	4.1
29	1.3	4.2	2.6	8.2	------	70	30	21	9.9	6.8	4.4	4.4
30	1.2	4.2	2.3	8.0	------	64	29	21	9.0	6.8	4.6	4.8
31	1.5	------	2.3	7.8	------	60	------	22	------	6.4	4.6	------
TOTAL	32.07	220.2	101.7	1,013.0	9,634.6	3,861	1,243	678	465.9	217.8	168.8	131.0
MEAN	1.03	7.34	3.28	32.7	344	125	41.4	21.9	15.5	7.03	5.45	4.37
MAX	1.9	43	5.7	493	3,000	400	58	27	23	8.7	6.4	4.8
MIN	.54	1.7	2.1	2.3	6.5	60	28	18	9.0	6.4	4.4	3.9
AC-FT	64	437	202	2,010	19,110	7,660	2,470	1,340	924	432	335	260

CAL YR 1972 TOTAL 1,447.74 MEAN 3.96 MAX 43 MIN .34 AC-FT 2,870
WTR YR 1973 TOTAL 17,767.07 MEAN 48.7 MAX 3,000 MIN .54 AC-FT 35,240

PEAK DISCHARGE (BASE, 200 CFS)

DATE	TIME	G.H.	DISCHARGE	DATE	TIME	G.H.	DISCHARGE
1-16	2015	6.47	448	2-11	unknown	13.3	13,400
1-18	1630	8.21	2,740	2-28	do	--	unknown
2-7	unknown	--	unknown	3-20	0500	8.14	350

NOTE.--No gage-height record Jan. 21 to Apr. 26.

11113900 SATICOY DIVERSION NEAR SATICOY, CALIF.

LOCATION.--Lat 34°17'06", long 119°07'14", in Santa Paula Y Saticoy Grant, Ventura County, on diversion ditch 0.7 mile downstream from Santa Clara River, and 1.5 miles east of Saticoy.

PERIOD OF RECORD.--April 1969 to current year. October 1928 to April 1969 in files of United Water Conservation District.

GAGE.--Water-stage recorder. Altitude of gage is 160 ft (from topographic map).

EXTREMES.--Period of record: Maximum daily discharge, 407 cfs Jan. 5, 6, 1966; no flow at times in most years.

REMARKS.--Water is diverted from left bank of Santa Clara River to percolation basin near Los Angeles Avenue (State Highway 118) and for irrigation in Pleasant Valley. See sta 11110000, Piru Creek near Piru, for report of controlled releases from Lake Piru. Imported water from the California Water Project released to the basin at Castaic Dam and Pyramid Dam since 1972. Records of chemical analyses for the current year are published in Part 2 of this report.

COOPERATION.--Records furnished by United Water Conservation District.

DISCHARGE, IN CUBIC FEET PER SECOND, WATER YEAR OCTOBER 1972 TO SEPTEMBER 1973

DAY	OCT	NOV	DEC	JAN	FEB	MAR	APR	MAY	JUN	JUL	AUG	SEP
1	16	14	49	46	97	0	344	205	66	40	89	108
2	15	13	47	45	92	0	339	205	67	48	87	111
3	15	13	57	47	98	0	329	205	68	41	90	115
4	14	12	56	44	124	0	317	205	70	44	90	120
5	14	15	55	43	134	0	304	205	67	50	92	123
6	13	16	48	43	0	72	310	205	63	52	98	115
7	12	16	56	44	0	37	314	205	59	55	97	109
8	12	16	50	43	0	0	316	205	55	58	94	106
9	12	15	49	60	0	0	314	205	50	58	92	110
10	13	16	46	64	0	0	314	205	51	55	92	113
11	13	25	46	56	0	0	314	205	52	58	94	111
12	12	33	48	52	0	0	314	205	52	62	100	108
13	13	24	50	51	0	0	314	205	52	68	107	109
14	13	14	50	52	0	0	314	205	50	70	111	131
15	15	69	54	50	0	68	314	205	50	78	111	134
16	15	108	48	51	0	305	314	205	47	86	111	142
17	16	318	48	0	0	317	314	205	46	78	109	158
18	15	225	48	0	0	343	314	205	47	70	113	151
19	19	94	50	0	0	349	314	205	44	70	117	152
20	18	54	49	0	0	175	314	205	39	77	124	152
21	14	50	52	0	0	0	314	205	36	76	125	138
22	13	43	48	0	0	0	314	205	36	79	106	142
23	13	42	46	22	0	0	314	205	35	83	103	158
24	14	41	50	113	0	0	314	205	32	82	101	176
25	14	40	52	112	0	0	314	205	33	81	100	171
26	14	39	46	106	13	0	314	205	33	80	100	151
27	14	39	46	99	0	82	314	205	31	83	107	140
28	14	37	47	93	0	315	314	205	32	85	106	142
29	14	36	44	88	------	353	314	205	62	90	98	151
30	14	40	44	61	------	362	210	70	58	91	106	161
31	14	------	45	84	------	354	------	62	------	94	106	------
TOTAL	437	1,517	1,524	1,569	558	3,132	9,377	6,077	1,483	2,142	3,176	4,008
MEAN	14.1	50.6	49.2	50.6	19.9	101	313	196	49.4	69.1	102	134
MAX	19	318	57	113	134	362	344	205	70	94	125	176
MIN	12	12	44	0	0	0	210	62	31	40	87	106
AC-FT	867	3,010	3,020	3,110	1,110	6,210	18,600	12,050	2,940	4,250	6,300	7,950

CAL YR 1972 TOTAL 15,713.20 MEAN 42.9 MAX 318 MIN 0 AC-FT 31,170
WTR YR 1973 TOTAL 35,000.00 MEAN 95.9 MAX 362 MIN 0 AC-FT 69,420

11114000 SANTA CLARA RIVER AT MONTALVO, CALIF.

LOCATION.--Lat 34°14'31", long 119°11'21", in San Miguel Grant, Ventura County, on downstream end of center pier southbound bridge on U.S. Highway 101, 0.9 mile southeast of Montalvo.

DRAINAGE AREA.--1,612 sq mi.

PERIOD OF RECORD.--October 1927 to September 1932, October 1949 to current year. Monthly discharge only for 1950-67, published in WRD 1968 report. October 1949 to September 1969, published as "at Saticoy."

GAGE.--Water-stage recorder. Datum of gage is 51.88 ft above mean sea level (levels by Ventura County Flood Control District). Oct. 1, 1927, to Sept. 30, 1932, and Oct. 1, 1949, to Sept. 30, 1967, at same site at different datums. Oct. 1, 1967, to Feb. 2, 1970, at site 3.9 miles upstream at different datum.

AVERAGE DISCHARGE.--29 years, 117 cfs (84,770 acre-ft per year).

EXTREMES.--Current year: Maximum discharge, 58,200 cfs Feb. 11 (gage height, 10.63 ft); no flow many days.
Period of record: Maximum discharge, 165,000 cfs Jan. 25, 1969 (gage height, 17.41 ft, present datum); no flow for long periods in most years.
Flood of Mar. 2, 1938, 120,000 cfs, estimated by Ventura County Flood Control District.

REMARKS.--Records poor. Flow partly regulated since May 1955 by Lake Piru (see sta 11109700), since December 1971 by Pyramid Dam (capacity, 173,500 acre-ft), and since January 1972 by Castaic Reservoir (capacity, 324,000 acre-ft). Natural flow affected by ground-water withdrawals, diversions, municipal use, and ground-water replenishment. Imported water from the California Water Project released to the basin at Castaic Dam and Pyramid Dam. Diversion to spreading grounds and for irrigation in Pleasant Valley, at site 6.0 miles upstream (see sta 11113900). AVERAGE DISCHARGE represents flow to the ocean regardless of upstream development. Records of chemical analyses and suspended-sediment discharge for the current year are published in Part 2 of this report.

COOPERATION.--Eighteen discharge measurements furnished by Ventura County Flood Control District.

DISCHARGE, IN CUBIC FEET PER SECOND, WATER YEAR OCTOBER 1972 TO SEPTEMBER 1973

DAY	OCT	NOV	DEC	JAN	FEB	MAR	APR	MAY	JUN	JUL	AUG	SEP
1	.14	0	.01	0	.6	1,700	2.0	.21	.11			
2	.52	0	0	0	.5	1,200	1.7	.20	.11			
3	1.6	0	0	0	.3	900	1.4	.19	.11			
4	1.7	0	.04	0	.7	780	1.2	.19	.11			
5	1.1	0	.03	0	.5	670	1.1	.18	.11			
6	1.5	0	.02	0	2,830	500	.94	.17	.11			
7	.69	0	.03	0	7,330	900	.84	.17	.11			
8	.18	0	.03	0	1,480	1,250	.75	.16	.11			
9	.78	0	.02	0	681	680	.68	.16	.11			
10	.28	0	.02	0	6,410	1,000	.60	.15	.11			
11	.07	.04	.01	0	25,800	1,200	.58	.14	.11			
12	0	.05	.01	0	5,600	800	.54	.14	.11			
13	0	.05	.01	0	3,300	640	.50	.14	.11			
14	0	338	.01	0	2,500	560	.47	.14	.11			
15	0	142	0	0	1,000	250	.44	.13	.11			
16	0	15	.03	465	700	120	.41	.13	.10			
17	0	228	.02	1,040	500	85	.39	.13	.10			
18	0	18	.01	5,280	450	75	.37	.12	.10			
19	0	.18	.01	3,100	400	65	.35	.12	.10			
20	0	.10	.01	363	370	1,380	.33	.12	.10			
21	0	.09	0	300	360	1,000	.32	.12	0			
22	0	.08	0	200	410	800	.30	.12	0			
23	0	.08	0	100	370	650	.29	.12	0			
24	0	.07	0	60	330	560	.28	.12	0			
25	0	.07	0	30	300	530	.27	.11	0			
26	0	.06	0	18	280	510	.26	.11	0			
27	0	.05	0	10	2,500	510	.24	.11	0			
28	0	.04	0	5.0	6,200	50	.23	.11	0			
29	0	.03	0	3.0	------	5.0	.23	.11	0			
30	0	.02	0	1.5	------	3.0	.22	.11	0			
31	0	------	0	1.0	------	2.5	------	.11	------			------
TOTAL	8.56	742.01	.32	10,976.5	70,103.6	19,375.5	18.23	4.34	2.15	0	0	0
MEAN	.28	24.7	.010	354	2,504	625	.61	.14	.072	0	0	0
MAX	1.7	338	.04	5,280	25,800	1,700	2.0	.21	.11	0	0	0
MIN	0	0	0	0	.30	2.5	.22	.11	0	0	0	0
AC-FT	17	1,470	.6	21,770	139,100	38,430	36	8.6	4.3	0	0	0

CAL YR 1972 TOTAL 2,497.01 MEAN 6.8 MAX 338 MIN 0 AC-FT 4,950
WTR YR 1973 TOTAL 101,231.21 MEAN 277 MAX 25,800 MIN 0 AC-FT 200,800

11115000 MATILIJA RESERVOIR AT MATILIJA HOT SPRINGS, CALIF.

LOCATION.--Lat 34°29'08", long 119°18'25", in NE¼NW¼SE¼ sec.29, T.5 N., R.23 W., Ventura County, on left end of dam 0.2 mile east of Matilija Hot Springs, and 1.8 miles southwest of Wheeler Springs.

DRAINAGE AREA.--54.4 sq mi.

PERIOD OF RECORD.--March 1948 to September 1965, October 1970 to current year. Prior to October 1953, published as "at Matilija."

GAGE.--Water-stage recorder. Datum of gage is at mean sea level (Ventura County Department of Public Works bench mark). Prior to Nov. 12, 1970, at site near right end of dam at same datum.

EXTREMES.--Current year: Maximum contents, 2,792 acre-ft Feb. 11 (elevation, 1,099.27 ft); minimum, 108 acre-ft Oct. 3 (elevation, 1,045.63 ft).
Period of record: Maximum contents, 7,399 acre-ft Apr. 3, 1958 (elevation, 1,128.10 ft); minimum, 5.90 acre-ft Oct. 31, 1970 (elevation, 1,038.31 ft).
Maximum contents from September 1965 to September 1970, 3,128 acre-ft Jan. 25, 1969 (elevation, 1,103.6 ft).

REMARKS.--Reservoir is formed by concrete-arch dam. Dam was completed in 1948. Storage began Mar. 14, 1948. Capacity table is dated October 1970 (furnished by Ventura County Flood Control District). Lowest sluice gate silted (elevation, 1,000 ft). Usable capacity, 2,380 acre-ft between elevations 1,045 ft (lowest usable outlet) and 1,095 ft (crest of spillway). Dead storage below elevation 1,045 ft, 93 acre-ft. Capacity below spillway level (elevation, 1,095 ft), 2,473 acre-ft. Water is released from reservoir to natural stream for recharge of ground-water basin in Ventura River Valley and at times releases up to 500 cfs, diverted since May 1959 at Robles diversion dam to Lake Casitas on Coyote Creek.

MONTHEND ELEVATION AND CONTENTS, WATER YEAR OCTOBER 1972 TO SEPTEMBER 1973

Date	Elevation (feet)a	Contents (acre-feet)	Change in contents (acre-feet)
Sept. 30.....	1,046.14	119	--
Oct. 31.....	1,046.30	123	+4
Nov. 30.....	1,059.89	529	+406
Dec. 31.....	1,060.12	538	+9
CAL YR 1972.....	--	--	-31
Jan. 31.....	1,063.00	643	+105
Feb. 28.....	1,089.70	2,101	+1,458
Mar. 31.....	1,072.08	1,048	-1,053
Apr. 30.....	1,071.56	1,022	-26
May 31.....	1,077.85	1,355	+333
June 30.....	1,081.52	1,570	+215
July 31.....	1,080.99	1,538	-32
Aug. 31.....	1,079.91	1,474	-64
Sept. 30.....	1,079.90	1,473	-1
WTR YR 1973.....	--	--	+1,354

a Elevation at 2400.

11115500 MATILIJA CREEK AT MATILIJA HOT SPRINGS, CALIF.

LOCATION.--Lat 34°28'58", long 119°18'03", in SW¼NW¼SW¼ sec.28, T.5 N., R.23 W., Ventura County, on right bank 0.2 mile east of Matilija Hot Springs, 0.2 mile upstream from North Fork, and 0.4 mile downstream from Matilija Dam.

DRAINAGE AREA.--54.6 sq mi.

PERIOD OF RECORD.--October 1927 to current year. Combined monthly records for creek and diversion, May 1951 to September 1969. Prior to October 1953, published as "at Matilija."

GAGE.--Water-stage recorder. Concrete control since September 1969. Altitude of gage is 900 ft (from topographic map). Prior to Feb. 11, 1939, at site 0.6 mile upstream at different datum.

EXTREMES.--Current year: Maximum discharge, 6,810 cfs Feb. 11 (gage height, 7.58 ft), from rating curve extended above 350 cfs on basis of computation of flow over dam; minimum daily, 0.47 cfs Nov. 19.
Period of record: Maximum discharge, 20,000 cfs Jan. 25, 1969 (gage height, 16.5 ft), from rating curve extended above 4,200 cfs on basis of computation of maximum flow over dam; minimum daily, 0.10 cfs for several days in some years of regulated flow.

REMARKS.--Records good. Flow regulated by Matilija Reservoir March 1948 to March 1964 (capacity, 7,020 acre-ft) and partly regulated since March 1964 (capacity, 3,800 acre-ft). Water diverted at dam by Matilija conduit to Ventura River basin and Ojai Valley for irrigation from May 1951 to January 1969.

DISCHARGE, IN CUBIC FEET PER SECOND, WATER YEAR OCTOBER 1972 TO SEPTEMBER 1973

DAY	OCT	NOV	DEC	JAN	FEB	MAR	APR	MAY	JUN	JUL	AUG	SEP
1	2.1	1.8	8.1	8.0	19	366	116	35	10	9.4	9.0	6.0
2	3.1	1.8	7.9	8.0	24	401	105	34	10	9.4	9.0	6.0
3	3.5	1.9	7.6	8.0	24	416	110	34	10	9.4	9.0	6.0
4	.48	2.1	7.8	7.5	23	410	114	34	9.5	9.4	9.0	6.0
5	.50	2.0	7.5	6.8	65	221	108	34	11	9.4	9.0	6.0
6	1.3	2.0	7.6	6.3	102	152	99	34	14	9.4	9.0	5.5
7	1.5	2.0	7.5	6.3	442	185	96	32	14	9.3	9.0	5.5
8	1.8	2.1	7.7	6.5	347	185	96	32	14	9.3	7.2	5.5
9	1.9	2.0	7.5	7.4	412	140	96	32	14	9.3	4.8	5.5
10	1.7	2.1	7.5	8.2	326	70	96	32	14	9.3	5.7	5.5
11	1.6	4.2	7.0	10	2,690	.86	96	32	14	9.3	5.9	5.5
12	1.5	2.7	6.7	10	770	.57	85	32	14	9.3	5.8	5.5
13	1.5	2.5	5.4	11	480	236	79	32	14	9.3	5.8	5.5
14	2.0	3.7	4.6	11	348	245	79	32	14	9.3	5.8	5.5
15	2.0	.51	4.6	11	344	239	79	29	14	9.2	5.9	5.5
16	1.9	1.1	4.6	13	388	202	75	28	14	9.2	5.9	5.5
17	2.1	.76	4.6	50	320	138	75	28	14	9.2	5.9	5.5
18	1.9	.50	5.4	65	420	117	75	28	14	9.2	5.9	5.5
19	2.2	.47	5.9	158	424	120	75	28	13	9.2	5.9	5.4
20	1.9	1.8	5.9	435	239	121	75	28	13	9.2	5.9	5.4
21	1.9	5.8	6.2	393	160	155	75	28	13	9.2	5.5	5.4
22	1.7	5.3	6.3	116	151	157	72	17	13	9.2	6.0	5.3
23	1.6	5.2	6.7	34	98	175	68	5.5	13	9.1	6.0	5.9
24	1.8	5.3	6.7	45	132	178	68	5.5	13	9.1	4.5	5.5
25	2.0	5.2	6.7	28	140	178	47	5.5	13	9.1	3.4	5.5
26	1.8	5.2	6.5	30	118	146	59	5.6	13	9.1	3.6	5.5
27	1.9	5.2	6.3	33	112	122	48	5.5	11	9.1	4.0	5.4
28	1.8	5.9	6.3	32	181	87	43	5.5	9.2	9.1	4.6	5.4
29	2.5	7.9	6.7	19	------	114	45	6.3	9.4	9.1	5.4	5.4
30	1.9	9.7	7.7	11	------	116	38	9.8	9.4	9.0	18	5.4
31	1.8	------	8.0	11	------	119	------	10	------	9.0	43	------
TOTAL	57.18	98.74	205.5	1,599.0	9,299	5,512.43	2,393	734.2	375.5	286.1	243.4	167.0
MEAN	1.84	3.29	6.63	51.6	332	178	79.8	23.7	12.5	9.23	7.85	5.57
MAX	3.5	9.7	8.1	435	2,690	416	116	35	14	9.4	43	6.0
MIN	.48	.47	4.6	6.3	19	.57	38	5.5	9.2	9.0	3.4	5.3
AC-FT	113	196	408	3,170	18,440	10,930	4,750	1,460	745	567	483	331

CAL YR 1972 TOTAL 2,710.12 MEAN 7.40 MAX 130 MIN .47 AC-FT 5,380
WTR YR 1973 TOTAL 20,971.05 MEAN 57.5 MAX 2,690 MIN .47 AC-FT 41,600

11116000 NORTH FORK MATILIJA CREEK AT MATILIJA HOT SPRINGS, CALIF.

LOCATION.--Lat 34°29'33", long 119°18'20", in NE¼NW¼NE¼ sec.29, T.5 N., R.23 W., Ventura County, on right bank at bridge on U.S. Highway 399, 0.7 mile north of Matilija Hot Springs, and 0.8 mile upstream from mouth.

DRAINAGE AREA.--15.6 sq mi.

PERIOD OF RECORD.--October 1928 to September 1932, October 1933 to current year. Prior to October 1953, published as "at Matilija."

GAGE.--Water-stage recorder. Concrete control since September 1966. Datum of gage is 1,142.02 ft above mean sea level (levels by Ventura County Flood Control District). Prior to Nov. 12, 1948, at site 0.3 mile downstream at different datum.

AVERAGE DISCHARGE.--44 years, 10.4 cfs (7,530 acre-ft per year).

EXTREMES.--Current year: Maximum discharge, 4,110 cfs Feb. 6 (gage height, 6.94 ft); minimum daily, 0.72 cfs Oct. 19-23.

Period of record: Maximum discharge, 9,440 cfs Feb. 24, 1969 (gage height, 11.0 ft, from floodmark), from rating curve extended above 1,700 cfs on basis of slope-area measurement at gage height 10.0 ft; minimum daily, 0.10 cfs for several days in some years.

REMARKS.--No regulation or diversion above station.

COOPERATION.--Records furnished by Ventura County Flood Control District and reviewed by Geological Survey.

DISCHARGE, IN CUBIC FEET PER SECOND, WATER YEAR OCTOBER 1972 TO SEPTEMBER 1973

DAY	OCT	NOV	DEC	JAN	FEB	MAR	APR	MAY	JUN	JUL	AUG	SEP
1	.85	.85	1.3	1.7	5.4	112	28	14	9.4	5.1	3.4	2.6
2	.85	.85	1.3	1.7	5.1	88	28	13	9.4	4.8	3.4	2.6
3	.85	.85	1.3	1.9	5.4	76	27	13	9.4	4.4	3.4	2.6
4	.85	.85	2.1	1.9	12	70	25	12	8.9	4.4	3.4	2.6
5	.85	1.0	2.1	1.9	7.4	60	24	12	8.4	4.4	3.4	2.8
6	.85	1.0	2.4	2.4	702	66	23	12	7.9	4.4	3.4	2.6
7	.85	1.0	2.4	2.4	365	52	23	12	7.4	4.4	3.4	2.6
8	.85	1.0	2.1	2.4	98	54	22	12	7.0	4.4	3.4	2.6
9	.85	1.0	2.1	3.7	52	47	21	11	6.6	4.1	3.4	2.6
10	.85	1.0	1.9	2.4	378	44	21	11	6.6	4.1	3.1	2.6
11	.85	3.1	1.9	2.1	1,330	54	21	11	6.6	4.1	3.1	2.6
12	.85	1.5	1.9	1.9	262	47	20	11	6.6	4.1	2.8	2.6
13	.85	1.3	1.7	1.9	167	47	20	11	6.6	4.1	2.8	2.6
14	.85	10	1.7	1.9	102	44	20	11	6.6	4.1	2.6	2.6
15	.85	3.1	1.9	1.9	88	41	19	11	6.2	3.7	2.6	2.6
16	.85	25	1.9	31	86	38	18	11	6.2	3.7	2.4	2.6
17	.85	23	1.9	13	86	35	18	11	5.8	3.4	2.4	2.6
18	.85	4.8	1.7	13	82	33	17	11	5.8	3.4	2.4	2.6
19	.72	3.4	1.7	73	74	31	17	11	5.4	3.4	2.4	2.6
20	.72	3.4	1.7	15	44	98	17	11	5.4	3.4	2.4	2.6
21	.72	3.4	1.7	14	41	48	17	11	5.1	3.4	2.6	2.6
22	.72	3.1	1.7	12	38	44	16	11	5.1	3.4	2.6	2.6
23	.72	2.6	1.7	10	34	40	16	11	5.1	3.4	2.8	2.6
24	.85	2.6	1.7	8.9	35	36	15	11	5.1	3.4	2.8	2.6
25	.85	2.3	1.7	8.4	29	35	15	11	5.1	3.4	2.8	2.4
26	.85	2.1	1.9	7.4	29	34	15	11	5.1	3.4	2.8	2.4
27	.85	1.9	1.9	6.6	215	33	15	9.4	5.1	3.4	2.8	2.4
28	.85	1.7	1.9	6.2	247	30	15	8.9	5.1	3.4	2.8	2.1
29	.85	1.3	1.9	6.2	------	29	15	8.4	5.1	3.4	2.8	2.1
30	.85	1.3	1.7	6.2	------	29	15	8.9	5.1	3.4	2.6	2.1
31	.85	------	1.7	5.8	------	29	------	8.9	------	3.4	2.6	------
TOTAL	25.70	110.30	56.5	668.8	4,619.3	1,524	583	342.5	193.2	119.3	89.6	76.1
MEAN	.83	3.68	1.82	21.6	165	49.2	19.4	11.0	6.44	3.85	2.89	2.54
MAX	.85	25	2.4	413	1,330	112	28	14	9.4	5.1	3.4	2.8
MIN	.72	.85	1.3	1.7	5.1	29	15	8.4	5.1	3.4	2.4	2.1
AC-FT	51	219	112	1,330	9,160	3,020	1,160	679	383	237	178	151

CAL YR 1972 TOTAL 751.56 MEAN 2.05 MAX 25 MIN .60 AC-FT 1,490
WTR YR 1973 TOTAL 8,408.30 MEAN 23.0 MAX 1,330 MIN .72 AC-FT 16,680

PEAK DISCHARGE (BASE, 40 CFS)

DATE	TIME	G.H.	DISCHARGE	DATE	TIME	G.H.	DISCHARGE
11-16	0630	2.08	56	2-6	2130	6.94	4,110
11-17	0600	2.08	56	2-11	0500	7.35	3,640
1-16	1700	2.33	100	2-27	2000	5.71	1,120
1-18	1500	5.40	2,510	3-20	0330	4.72	295

11116550 VENTURA RIVER NEAR MEINERS OAKS, CALIF.

LOCATION.--Lat 34°27'54", long 119°17'20", in SE¼SW¼SE¼ sec.33, T.5 N., R.23 W., Ventura County, on right bank 50 ft downstream from Robles diversion dam, and 1.2 miles northwest of Meiners Oaks.

DRAINAGE AREA.--76.4 sq mi.

PERIOD OF RECORD.--May 1959 to current year.

GAGE.--Water-stage recorder. Datum of gage is 750.00 ft above mean sea level (Bureau of Reclamation bench mark). Prior to Oct. 30, 1969, at site 500 ft downstream at datum 5.40 ft lower.

EXTREMES.--Current year: Maximum discharge, 10,000 cfs (estimated) Feb. 11 (gage height, unknown); no flow much of year.
Period of record: Maximum discharge, 28,000 cfs (estimated) Jan. 25, 1969 (gage height, unknown); no flow for several months in most years.

REMARKS.--Records fair except those for periods of no gage-height record, which are poor. Flow regulated by Matilija Reservoir (capacity, 3,800 acre-ft). Flow up to 500 cfs diverted since May 1959 at Robles diversion dam to Lake Casitas on Coyote Creek. Flow reported herein is that released through gates in Robles diversion dam.

DISCHARGE, IN CUBIC FEET PER SECOND, WATER YEAR OCTOBER 1972 TO SEPTEMBER 1973

DAY	OCT	NOV	DEC	JAN	FEB	MAR	APR	MAY	JUN	JUL	AUG	SEP
1		0	6.8	2.8	16		0	9.5	11	8.7	7.3	.64
2		0	6.5	3.0	24		0	9.4	11	8.7	7.0	.59
3		0	6.2	2.9	27		15	9.4	11	8.7	6.5	.49
4		0	7.2	3.0	25		26	9.4	11	8.7	6.5	.41
5		0	6.8	2.8	20		15	9.4	11	8.5	6.0	.77
6		0	6.5	2.8	446		11	9.4	11	8.5	6.0	.95
7		0	6.6	2.6	154		11	9.4	11	8.5	5.5	.66
8		0	6.3	3.0	.25		9.9	9.4	11	8.5	5.5	.67
9		0	5.9	5.6	0		9.8	9.4	11	8.3	5.0	1.0
10		0	5.8	4.6	298		9.4	9.4	11	8.3	5.0	.74
11		2.8	5.5	5.0	3,620		9.0	9.4	10	8.3	4.5	.66
12		2.3	5.1	4.0	682		9.0	9.4	10	8.3	4.5	.42
13		1.7	5.0	4.0	237		8.6	9.4	10	8.1	4.0	.52
14		8.7	4.5	3.6	20		8.1	9.4	10	8.1	4.0	.59
15		2.5	3.6	3.6	0		8.0	9.4	10	8.1	3.5	.66
16		12	3.3	8.0	24		8.6	9.4	10	8.1	3.5	1.3
17		12	3.2	12	0		9.1	9.0	10	7.9	3.0	.97
18		4.8	3.5	400	92		8.0	9.0	10	7.9	3.0	1.3
19		2.8	3.7	20	0		7.8	9.0	10	7.9	2.5	1.1
20		1.9	3.7	2.5	0		7.5	9.0	10	7.9	2.5	1.2
21		4.0	3.8	1.5	2.2		7.6	9.0	9.0	7.7	2.3	1.3
22		4.4	3.5	3.0	10		7.7	9.0	9.0	7.7	2.3	2.0
23		3.9	3.7	9.4	10		7.9	9.0	9.0	7.7	2.3	3.2
24		4.2	3.6	8.0	0		7.7	13	9.0	7.7	2.3	2.1
25		4.1	3.5	10	0		7.4	12	9.0	7.6	2.2	1.2
26		4.1	3.2	13	15		6.9	11	9.0	7.6	2.1	.63
27		3.8	2.9	13	90		6.4	11	9.0	7.6	1.1	.81
28		4.4	2.7	16	20		6.1	11	9.0	7.6	1.2	.72
29		5.4	2.7	15	------		6.0	11	8.9	7.5	1.3	.72
30		6.6	2.8	9.4	------		7.6	11	8.8	7.5	1.4	1.5
31		------	2.8	13	------		------	11	------	7.5	.87	------
TOTAL	0	96.4	140.9	607.1	5,832.45	0	262.1	304.5	299.7	249.7	114.67	29.82
MEAN	0	3.21	4.55	19.6	208	0	8.74	9.82	9.99	8.05	3.70	.99
MAX	0	12	7.2	400	3,620	0	26	13	11	8.7	7.3	3.2
MIN	0	0	2.7	1.5	0	0	0	9.0	8.8	7.5	.87	.41
AC-FT	0	191	279	1,200	11,570	0	520	604	594	495	227	59

CAL YR 1972 TOTAL 1,340.99 MEAN 3.66 MAX 18 MIN 0 AC-FT 2,660
WTR YR 1973 TOTAL 7,937.34 MEAN 21.7 MAX 3,620 MIN 0 AC-FT 15,740

NOTE.--No gage-height record Jan. 18-21, Feb. 11-28, May 25 to Aug. 23, Aug. 27-30.

11117500 SAN ANTONIO CREEK AT CASITAS SPRINGS, CALIF.

LOCATION.--Lat 34°22'49", long 119°18'13", in Santa Ana Grant, Ventura County, on downstream side of bridge on U.S. Highway 399, 0.2 mile upstream from mouth, and 0.9 mile north of Casitas Springs.

DRAINAGE AREA.--51.2 sq mi.

PERIOD OF RECORD.--October 1949 to current year.

GAGE.--Water-stage recorder. Datum of gage is 307.25 ft above mean sea level (levels by Ventura County Flood Control District). Prior to Jan. 30, 1962, at datum 0.30 ft higher.

AVERAGE DISCHARGE.--24 years, 11.7 cfs (8,480 acre-ft per year).

EXTREMES.--Current year: Maximum discharge, 6,510 cfs Jan. 18 (gage height, 9.42 ft); no flow Oct. 1 to Nov. 13. Period of record: Maximum discharge, 16,200 cfs Jan. 25, 1969 (gage height, 14.30 ft, from inside gage), from rating curve extended above 2,000 cfs on basis of slope-area measurement of maximum flow; no flow for several months in most years.

REMARKS.--No regulation above station; pumping from wells along creek for irrigation.

COOPERATION.--Records furnished by Ventura County Flood Control District and reviewed by Geological Survey.

DISCHARGE, IN CUBIC FEET PER SECOND, WATER YEAR OCTOBER 1972 TO SEPTEMBER 1973

DAY	OCT	NOV	DEC	JAN	FEB	MAR	APR	MAY	JUN	JUL	AUG	SEP
1		0	.53	.64	2.1	70	19	15	8.8	6.5	3.9	3.3
2		0	.53	.64	1.9	45	19	15	8.8	6.5	3.9	3.3
3		0	.53	.64	3.3	34	18	15	9.3	6.5	3.9	3.3
4		0	2.6	.64	6.8	27	18	15	9.3	6.1	3.9	3.3
5		0	1.2	.64	5.7	24	18	15	9.3	6.1	3.9	3.3
6		0	1.2	.64	384	50	18	13	9.3	6.1	3.9	3.3
7		0	1.9	.64	367	36	18	13	8.8	6.1	3.9	3.3
8		0	1.2	.64	49	76	18	12	8.8	5.7	4.2	3.3
9		0	1.0	8.0	12	33	18	12	8.8	5.7	4.6	3.3
10		0	.89	1.2	1,150	29	18	12	8.8	5.3	5.0	3.3
11		0	.76	.89	2,500	79	18	12	8.8	5.3	5.0	3.3
12		0	.76	.76	390	30	18	12	8.8	5.3	4.2	3.3
13		0	.76	.76	210	26	18	12	8.8	5.3	3.9	3.3
14		45	.76	.89	98	24	18	11	8.8	5.3	3.6	3.3
15		2.6	.76	1.0	68	20	18	10	8.8	5.3	3.0	3.3
16		22	.76	107	51	20	18	9.8	8.8	5.3	3.0	3.3
17		28	.76	13	42	19	18	9.8	9.3	5.0	3.0	3.3
18		1.2	.76	923	33	18	18	9.8	9.3	5.0	2.8	3.3
19		1.0	.76	94	24	18	17	9.8	8.8	5.0	2.8	3.3
20		.89	.76	9.3	21	88	16	9.8	8.8	5.0	2.8	3.3
21		.89	.64	8.3	20	48	16	10	8.3	5.0	2.8	3.3
22		.76	.64	6.9	19	36	15	11	8.3	5.0	2.8	3.3
23		.76	.64	5.0	18	28	15	9.8	8.3	5.0	2.8	3.3
24		.64	.64	4.2	20	25	15	8.8	7.8	5.0	2.8	3.3
25		.64	.64	3.6	17	23	15	8.8	7.3	4.6	2.8	3.0
26		.64	.64	3.3	16	22	15	8.8	6.9	4.6	2.8	3.0
27		.53	.64	3.0	82	21	15	8.8	6.9	4.6	2.8	2.8
28		.53	.64	3.0	177	21	15	8.8	6.9	3.9	2.8	2.8
29		.53	.64	3.0	------	20	15	8.3	6.9	3.9	3.0	2.6
30		.53	.64	3.3	------	19	15	8.8	6.9	3.9	3.3	2.6
31		------	.64	2.6	------	19	------	8.8	------	3.9	3.3	------
TOTAL	0	107.14	26.22	1,211.12	5,787.8	1,048	510	343.7	253.5	161.8	107.2	96.0
MEAN	0	3.57	.85	39.1	207	33.8	17.0	11.1	8.45	5.22	3.46	3.20
MAX	0	45	2.6	923	2,500	88	19	15	9.3	6.5	5.0	3.3
MIN	0	0	.53	.64	1.9	18	15	8.3	6.9	3.9	2.8	2.6
AC-FT	0	213	52	2,400	11,480	2,080	1,010	682	503	321	213	190

CAL YR 1972 TOTAL 375.75 MEAN 1.03 MAX 45 MIN 0 AC-FT 745
WTR YR 1973 TOTAL 9,652.48 MEAN 26.4 MAX 2,500 MIN 0 AC-FT 19,150

PEAK DISCHARGE (BASE, 200 CFS)

DATE	TIME	G.H.	DISCHARGE	DATE	TIME	G.H.	DISCHARGE
11-14	0900	5.90	596	2-11	0430	9.57	5,660
1-16	1800	5.92	638	2-12	2230	7.50	728
1-18	1600	9.42	6,510	2-27	2200	6.91	336
2-6	2230	6.40	1,570	3-11	1030	6.51	224
2-10	2000	8.40	3,800	3-20	0400	6.95	245

11117600 COYOTE CREEK NEAR OAK VIEW, CALIF.

LOCATION.--Lat 34°25'02", long 119°22'01", in Santa Ana Grant, Ventura County, on right bank 1,000 ft downstream from Los Padres National Forest boundary, 0.6 mile upstream from Poplin Creek, and 4.2 miles northwest of Oak View.

DRAINAGE AREA.--13.2 sq mi.

PERIOD OF RECORD.--October 1958 to current year.

GAGE.--Water-stage recorder. Datum of gage is 560.47 ft above mean sea level (Bureau of Reclamation bench mark).

AVERAGE DISCHARGE.--15 years, 6.92 cfs (5,010 acre-ft per year).

EXTREMES.--Current year: Maximum discharge, 6,580 cfs Jan. 18 (gage height, 11.56 ft), from rating curve extended as explained below; minimum daily, 0.08 cfs Oct. 1.
Period of record: Maximum discharge, 8,000 cfs Jan. 25, 1969 (gage height, 12.00 ft, from floodmarks), from rating curve extended above 2,100 cfs on basis of slope-area measurements at gage heights 9.10 and 12.00 ft; no flow at times in most years.

REMARKS.--Records fair except those for period of no gage-height record, which are poor. No regulation or diversion above station.

COOPERATION.--Two discharge measurements furnished by Casitas Municipal Water District.

DISCHARGE, IN CUBIC FEET PER SECOND, WATER YEAR OCTOBER 1972 TO SEPTEMBER 1973

DAY	OCT	NOV	DEC	JAN	FEB	MAR	APR	MAY	JUN	JUL	AUG	SEP
1	.08	.30	.89	1.2	3.7	70	16	4.3	3.1	1.3	.78	.58
2	.09	.32	.89	1.3	2.9	42	13	3.7	3.1	1.5	.78	.58
3	.14	.32	.94	1.5	4.0	33	14	3.1	3.1	1.3	.78	.58
4	.16	.41	1.0	1.7	11	28	13	3.1	3.4	1.3	.68	.58
5	.14	.41	1.1	1.8	7.2	26	12	3.1	3.1	1.3	.58	.58
6	.11	.39	1.1	2.0	542	41	12	3.1	2.9	1.3	.58	.60
7	.11	.40	1.1	2.3	169	34	12	3.1	2.6	1.3	.58	.60
8	.17	.39	1.0	2.5	26	50	10	3.4	2.4	1.3	.58	.67
9	.20	.39	1.0	2.3	18	36	9.0	3.4	2.4	1.3	.68	.67
10	.17	.44	1.0	.85	768	31	9.0	3.1	2.6	1.3	.68	.67
11	.16	.76	1.0	.88	1,190	43	9.5	3.1	2.6	1.3	.68	.60
12	.15	.47	.93	.90	196	32	8.6	3.4	2.9	1.3	.68	.60
13	.15	.49	.90	.92	130	27	8.6	3.4	2.9	1.3	.68	.67
14	.22	12	.88	.98	76	26	8.1	3.4	2.9	1.3	.68	.67
15	.26	.73	.82	1.2	54	23	7.7	3.4	2.4	1.3	.68	.67
16	.24	74	.80	80	40	22	7.2	3.4	2.4	1.3	.68	.67
17	.24	38	.76	30	31	20	7.2	3.1	2.2	1.3	.58	.67
18	.25	4.8	.70	450	25	19	6.4	3.1	2.0	1.3	.58	.67
19	.24	2.3	.64	150	21	18	5.7	3.4	1.8	1.5	.58	.67
20	.25	1.6	.60	60	18	84	5.3	3.4	1.8	1.3	.49	.67
21	.26	1.3	.56	20	16	37	5.7	3.1	1.8	1.3	.49	.67
22	.25	1.0	.52	10	15	34	5.0	3.4	1.7	1.3	.41	.67
23	.25	.96	.47	6.0	14	28	5.0	3.4	1.7	1.2	.49	.60
24	.24	.89	.44	7.0	15	27	5.0	3.1	1.6	1.2	.49	.60
25	.22	.89	.41	7.5	15	26	5.0	3.4	1.6	1.2	.58	.60
26	.24	.89	.41	6.0	14	25	4.6	3.7	1.6	1.0	.49	.54
27	.30	.83	.45	5.5	90	23	4.3	3.1	1.5	.90	.41	.54
28	.30	.78	.60	4.5	250	20	4.6	3.1	1.5	.90	.33	.60
29	.27	.83	.75	4.0	------	18	4.6	2.9	1.5	.90	.41	.60
30	.24	.89	.85	3.7	------	19	4.3	3.1	1.4	1.0	.49	.67
31	.29	------	1.0	3.3	------	18	------	3.1	------	.90	.58	------
TOTAL	6.39	148.18	24.51	869.83	3,761.8	980	242.4	101.9	68.5	38.20	18.18	18.76
MEAN	.21	4.94	.79	28.1	134	31.6	8.08	3.29	2.28	1.23	.59	.63
MAX	.30	74	1.1	450	1,190	84	16	4.3	3.4	1.5	.78	.67
MIN	.08	.30	.41	.85	2.9	18	4.3	2.9	1.4	.90	.33	.54
AC-FT	13	294	49	1,730	7,460	1,940	481	202	136	76	36	37

CAL YR 1972	TOTAL	359.34	MEAN	.98	MAX	74	MIN	.04	AC-FT 713
WTR YR 1973	TOTAL	6,278.65	MEAN	17.2	MAX	1,190	MIN	.08	AC-FT 12,450

PEAK DISCHARGE (BASE, 150 CFS)

DATE	TIME	G.H.	DISCHARGE	DATE	TIME	G.H.	DISCHARGE
11-16	1445	7.12	181	2-10	1430	8.55	2,390
1-18	unknown	11.56	6,580	2-11	0445	9.85	4,070
2-6	2115	9.96	4,240	3-20	0400	5.86	345

NOTE.--No gage-height record Dec. 17 to Jan. 31, Feb. 14-28.

11117800 SANTA ANA CREEK NEAR OAK VIEW, CALIF.

LOCATION.--Lat 34°25'25", long 119°20'25", in Santa Ana Grant, Ventura County, on upstream end of right abutment of bridge, 400 ft upstream from unnamed tributary, and 3.0 miles northwest of Oak View.

DRAINAGE AREA.--9.11 sq mi.

PERIOD OF RECORD.--October 1958 to current year.

GAGE.--Water-stage recorder. Datum of gage is 612.43 ft above mean sea level (Bureau of Reclamation bench mark). Prior to Aug. 17, 1970, on downstream end of right abutment.

AVERAGE DISCHARGE.--15 years, 5.68 cfs (4,120 acre-ft per year).

EXTREMES.--Current year: Maximum discharge, 2,130 cfs Jan. 18 (gage height, 9.42 ft); no flow Oct. 1 to Nov. 13.
Period of record: Maximum discharge, 4,730 cfs Jan. 25, 1969 (gage height, 10.70 ft); no flow at times in each year.
Flood of Mar. 2, 1938, 3,780 cfs, by slope-area measurement at site 2.0 miles downstream.

REMARKS.--Records good. No regulation or diversion above station.

COOPERATION.--Two discharge measurements furnished by Casitas Municipal Water District.

DISCHARGE, IN CUBIC FEET PER SECOND, WATER YEAR OCTOBER 1972 TO SEPTEMBER 1973

DAY	OCT	NOV	DEC	JAN	FEB	MAR	APR	MAY	JUN	JUL	AUG	SEP
1		0	.09	.47	3.2	65	11	5.6	2.4	.40	.18	.08
2		0	.07	.52	3.0	42	11	5.2	2.7	.34	.21	.06
3		0	.06	.57	4.0	32	10	4.6	2.4	.22	.17	.06
4		0	.48	.52	9.2	27	10	4.6	2.6	.14	.19	.08
5		0	.27	.52	6.1	23	9.8	4.1	2.4	.16	.23	.08
6		0	.24	.57	238	33	9.8	4.0	2.1	.30	.60	.04
7		0	1.1	.57	206	28	9.2	3.7	2.1	.56	.55	.02
8		0	.99	.90	52	36	9.2	3.6	1.9	1.1	.58	.02
9		0	.81	1.1	30	27	9.8	3.2	2.0	.69	.44	.02
10		0	.77	.68	395	24	9.2	3.1	2.5	.72	.33	.03
11		0	.68	.64	753	31	8.7	2.9	2.5	.51	.30	.02
12		0	.60	.67	161	24	8.7	3.0	2.6	.19	.35	.01
13		0	.57	.74	102	22	8.7	2.4	2.7	.21	.40	.01
14		6.5	.57	.75	66	21	8.1	2.3	2.8	.51	.30	.01
15		.33	.53	.91	49	19	7.6	2.2	2.7	.65	.23	0
16		30	.52	54	38	17	7.6	2.0	2.5	.65	.21	0
17		21	.52	19	31	16	7.6	2.1	1.9	.50	.17	0
18		4.4	.47	384	25	15	7.6	2.2	1.5	.17	.13	0
19		2.4	.47	74	22	14	7.6	2.4	1.6	.08	.24	0
20		1.7	.47	24	19	38	7.6	2.3	1.1	.22	.24	.04
21		1.4	.47	15	18	24	7.3	2.1	.85	.24	.25	.21
22		1.2	.47	9.2	17	24	7.0	2.0	.37	.19	.25	.39
23		.82	.47	6.6	15	23	7.3	2.1	.36	.24	.26	.72
24		.27	.47	7.9	17	20	7.3	2.0	.27	.54	.26	.51
25		.23	.47	8.1	14	18	7.3	2.2	.22	.47	.27	.39
26		.20	.47	6.7	12	17	7.0	1.9	.22	.41	.23	.21
27		.17	.47	5.7	106	16	6.3	1.9	.20	.49	.17	.08
28		.10	.42	4.8	184	15	6.5	2.3	.23	.41	.16	.04
29		.09	.47	4.5	------	14	6.9	2.4	.23	.32	.13	.02
30		.09	.52	4.1	------	12	6.4	2.4	.23	.36	.12	.06
31		------	.57	3.6	------	11	------	2.2	------	.33	.10	------
TOTAL	0	70.90	15.55	641.33	2,595.5	748	248.1	89.0	48.18	12.32	8.25	3.21
MEAN	0	2.36	.50	20.7	92.7	24.1	8.27	2.87	1.61	.40	.27	.11
MAX	0	30	1.1	384	753	65	11	5.6	2.8	1.1	.60	.72
MIN	0	0	.06	.47	3.0	11	6.3	1.9	.20	.08	.10	0
AC-FT	0	141	31	1,270	5,150	1,480	492	177	96	24	16	6.4

CAL YR 1972 TOTAL 244.11 MEAN .67 MAX 30 MIN 0 AC-FT 484
WTR YR 1973 TOTAL 4,480.34 MEAN 12.3 MAX 753 MIN 0 AC-FT 8,890

PEAK DISCHARGE (BASE, 150 CFS)

DATE	TIME	G.H.	DISCHARGE	DATE	TIME	G.H.	DISCHARGE
1-16	1800	7.47	350	2-11	0430	8.44	1,700
1-18	1415	9.42	2,130	2-27	1930	7.01	522
2-6	0015	8.03	1,300				

11118000 COYOTE CREEK NEAR VENTURA, CALIF.

LOCATION.--Lat 34°21'26", long 119°18'46", near southeast corner of Santa Ana Grant, Ventura County, on right bank 200 ft downstream from county highway bridge, 0.3 mile upstream from mouth, and 5.5 miles northwest of Ventura.

DRAINAGE AREA.--41.2 sq mi.

PERIOD OF RECORD.--October 1927 to September 1932, October 1933 to September 1958, October 1969 to current year.

GAGE.--Water-stage recorder. Datum of gage is 224.95 ft above mean sea level (Ventura County Flood Control bench mark). See WSP 1735 for history of changes prior to Oct. 1, 1969.

AVERAGE DISCHARGE.--30 years (1927-32, 1933-58), 13.2 cfs (9,560 acre-ft per year).

EXTREMES.--Current year: Maximum discharge, 408 cfs Jan. 18 (gage height, 9.07 ft), from rating curve extended above 25 cfs; no flow many days.
Period of record: Maximum discharge, 11,500 cfs Mar. 2, 1938, on basis of slope-area measurement of maximum flow; no flow at times in some years.

REMARKS.--Records poor. Flow mostly regulated by Casitas Reservoir since October 1959 (capacity, 267,000 acre-ft).

DISCHARGE, IN CUBIC FEET PER SECOND, WATER YEAR OCTOBER 1972 TO SEPTEMBER 1973

DAY	OCT	NOV	DEC	JAN	FEB	MAR	APR	MAY	JUN	JUL	AUG	SEP
1		0	0	.05	.36	2.7	.68	.47	.37	.17	.08	.06
2		0	0	.05	.35	2.3	.56	.40	.37	.15	.08	.05
3		0	0	.06	.40	2.3	.54	.39	.35	.14	.08	.07
4		0	.05	.06	.90	1.5	.52	.35	.33	.13	.08	.13
5		0	0	.06	.35	1.1	.50	.35	.32	.14	.10	.20
6		0	0	.06	7.2	2.0	.55	.38	.33	.14	.10	.18
7		0	0	.06	5.3	1.8	.58	.41	.36	.14	.07	.12
8		0	0	.08	1.7	3.2	.53	.38	.36	.14	.07	.13
9		0	0	.30	1.1	1.8	.54	.36	.36	.15	.07	.12
10		0	0	.12	74	1.4	.55	.34	.36	.14	.07	.14
11		0	0	.10	100	3.0	.52	.37	.30	.14	.08	.13
12		0	0	.10	12	1.7	.52	.44	.30	.14	.11	.09
13		0	0	.10	12	1.4	.49	.51	.34	.13	.09	.15
14		.17	0	.10	6.1	1.4	.65	.54	.30	.14	.09	.17
15		0	0	.10	4.3	1.3	.85	.51	.27	.14	.10	.20
16		.03	0	13	3.0	1.3	.83	.51	.25	.12	.11	.19
17		.04	0	1.1	2.8	1.4	.84	.49	.23	.10	.10	.17
18		.72	0	68	2.4	1.4	.75	.52	.21	.09	.09	.17
19		0	0	3.9	2.2	1.5	.71	.53	.18	.08	.06	.18
20		0	.01	.90	1.8	6.0	.71	.62	.17	.09	.06	.18
21		0	.01	1.1	1.9	2.3	.68	.58	.16	.08	.06	.16
22		0	.02	.90	1.9	1.8	.68	.59	.16	.07	.05	.20
23		0	.02	.75	2.3	1.5	.59	.64	.13	.07	.02	.20
24		0	.02	.68	3.0	1.3	.57	.50	.15	.06	.03	.17
25		0	.02	.62	2.4	1.2	.56	.42	.15	.06	.03	.15
26		0	.03	.56	2.2	1.1	.59	.35	.16	.07	.03	.05
27		0	.04	.45	8.3	1.1	.59	.27	.17	.06	.03	0
28		0	.05	.45	9.1	1.1	.58	.26	.18	.06	.03	0
29		0	.05	.45	------	.90	.56	.22	.18	.06	.04	0
30		0	.04	.45	------	.90	.53	.23	.18	.06	.05	0
31		------	.05	.35	------	.68	------	.30	------	.08	.06	------
TOTAL	0	.96	.41	95.06	269.36	54.38	18.35	13.23	7.68	3.34	2.12	3.76
MEAN	0	.032	.013	3.07	9.62	1.75	.61	.43	.26	.11	.068	.13
MAX	0	.72	.05	68	100	6.0	.85	.64	.37	.17	.11	.20
MIN	0	0	0	.05	.35	.68	.49	.22	.13	.06	.02	0
AC-FT	0	1.9	.8	189	534	108	36	26	15	6.6	4.2	7.5

CAL YR 1972 TOTAL 29.69 MEAN .08 MAX .72 MIN 0 AC-FT 59
WTR YR 1973 TOTAL 468.65 MEAN 1.28 MAX 100 MIN 0 AC-FT 930

11118500 VENTURA RIVER NEAR VENTURA, CALIF.

LOCATION.--Lat 34°21'08", long 119°18'27", in southeast corner of Santa Ana Grant, Ventura County, on right bank 50 ft downstream from county road bridge at Foster Memorial Park, 0.2 mile downstream from Coyote Creek, and 5 miles north of Ventura.

DRAINAGE AREA.--188 sq mi.

PERIOD OF RECORD.--September 1911 to January 1914, October 1929 to current year; combined records of river and diversion, October 1932 to current year.

GAGE.--Water-stage recorder on river; water-stage recorder and Parshall flume on diversion. Datum of gage is 205.23 ft above mean sea level (Ventura County Flood Control bench mark). See WSP 1315-B for history of changes prior to Nov. 2, 1949. Nov. 2, 1949, to June 12, 1969, at site 450 ft downstream at datum 4.00 ft lower.

AVERAGE DISCHARGE (River only).--46 years (1911-13, 1929-73), 56.5 cfs (40,930 acre-ft per year).
(Combined river and diversion).--41 years, 66.0 cfs (47,820 acre-ft per year).

EXTREMES (River only).--Current year: Maximum discharge, 15,700 cfs Feb. 11 (gage height, 15.0 ft); no flow Oct. 1 to Nov. 13.
Period of record: Maximum discharge, 58,000 cfs Jan. 25, 1969 (gage height, 24.3 ft, present datum, from floodmarks), from rating curve extended above 19,600 cfs on basis of contracted-opening measurement of maximum flow; no flow at times in many years.
(Combined flow).--Current year: Maximum discharge, 15,710 cfs Feb. 11; minimum daily, 0.9 cfs Nov. 25.
Period of record: Maximum discharge, 58,000 cfs Jan. 25, 1969; minimum daily, 0.10 cfs Sept. 3, 4, 13, 1961.

REMARKS.--Records good. Flow partly regulated since March 1948 by Matilija Reservoir (capacity, 3,800 acre-ft) and since October 1959 by Casitas Reservoir (capacity, 267,000 acre-ft). Water diverted to Casitas Reservoir on Coyote Creek since January 1959. Diversion by city of Ventura for municipal supply began prior to 1911. Records of chemical analyses, water temperatures, and suspended-sediment discharge for the current year are published in Part 2 of this report. AVERAGE DISCHARGE (River only) represents flow to ocean regardless of upstream development. For records of combined discharge of river and Ventura City diversion, see following page.

DISCHARGE, IN CUBIC FEET PER SECOND, WATER YEAR OCTOBER 1972 TO SEPTEMBER 1973

DAY	OCT	NOV	DEC	JAN	FEB	MAR	APR	MAY	JUN	JUL	AUG	SEP
1		0	1.1	3.6	7.4	117	33	21	13	12	6.6	7.0
2		0	1.4	3.8	7.2	97	31	22	17	9.8	6.2	4.2
3		0	1.5	3.8	30	87	27	19	18	12	6.2	9.8
4		0	5.2	4.1	67	76	27	19	13	18	6.2	5.2
5		0	3.4	4.5	45	68	27	21	15	14	7.9	9.8
6		0	3.4	4.7	999	90	27	20	13	12	6.2	13
7		0	4.0	4.1	1,250	89	27	22	10	16	4.9	14
8		0	2.5	4.0	99	112	27	24	11	15	4.2	14
9		0	2.2	13	15	84	27	26	10	12	3.9	13
10		0	2.3	5.5	2,010	73	27	22	9.8	10	3.9	12
11		0	2.5	4.5	7,130	111	27	17	9.3	12	3.3	12
12		0	2.7	4.0	1,890	86	27	18	11	12	3.3	11
13		0	2.6	3.8	765	78	27	20	14	10	8.8	11
14		139	2.7	3.6	172	72	27	18	15	11	10	12
15		2.8	2.6	3.4	98	67	27	17	15	11	8.4	10
16		79	2.7	373	72	64	27	19	14	9.8	7.5	11
17		109	2.8	60	62	62	27	19	15	13	7.5	10
18		6.6	2.6	2,020	55	60	27	15	15	11	7.5	12
19		2.5	2.7	188	50	58	27	15	16	9.8	7.0	11
20		1.4	2.8	41	46	181	27	16	17	11	5.9	8.8
21		.72	2.7	22	43	89	26	18	11	11	4.9	7.9
22		.47	2.8	17	41	82	24	17	11	11	6.6	9.3
23		.47	2.7	13	39	69	25	19	14	11	6.6	9.3
24		.47	2.8	12	36	64	22	19	14	10	6.2	8.8
25		.59	3.0	10	34	59	17	19	10	10	5.5	7.9
26		1.0	2.9	9.6	33	56	17	19	13	9.8	3.6	8.8
27		1.0	3.1	9.0	216	52	21	15	10	8.4	3.6	4.5
28		1.0	2.9	8.5	251	50	25	15	14	11	3.6	2.0
29		.87	3.1	8.2	------	44	23	16	9.8	12	3.6	3.6
30		.72	3.2	7.9	------	39	22	15	11	10	3.6	3.3
31		------	3.4	7.6	------	36	------	11	------	8.4	3.6	------
TOTAL	0	347.61	86.3	2,877.2	15,562.6	2,372	772	573	388.9	354.0	176.8	276.2
MEAN	0	11.6	2.78	92.8	556	76.5	25.7	18.5	13.0	11.4	5.70	9.21
MAX	0	139	5.2	2,020	7,130	181	33	26	18	18	10	14
MIN	0	0	1.1	3.4	7.2	36	17	11	9.3	8.4	3.3	2.0
AC-FT	0	689	171	5,710	30,870	4,700	1,530	1,140	771	702	351	548

CAL YR 1972 TOTAL 901.47 MEAN 2.46 MAX 139 MIN 0 AC-FT 1,790
WTR YR 1973 TOTAL 23,786.61 MEAN 65.2 MAX 7,130 MIN 0 AC-FT 47,180

PEAK DISCHARGE (BASE, 500 CFS)

DATE	TIME	G.H.	DISCHARGE	DATE	TIME	G.H.	DISCHARGE
11-14	1015	7.14	1,280	2-11	0515	15.00	15,700
1-16	1900	8.05	2,000	2-27	2045	6.76	1,120
1-18	1615	14.64	14,600	3-20	0415	6.53	979
2-6	2315	9.68	3,940				

11118500 VENTURA RIVER NEAR VENTURA, CALIF.--Continued

COMBINED DISCHARGE, IN CUBIC FEET PER SECOND, OF VENTURA RIVER AND VENTURA CITY DIVERSION NEAR VENTURA, CALIF., WATER YEAR OCTOBER 1972 TO SEPTEMBER 1973

DAY	OCT	NOV	DEC	JAN	FEB	MAR	APR	MAY	JUN	JUL	AUG	SEP
1	2.7	2.3	2.8	5.5	17	127	43	32	26	23	18	17
2	2.7	2.3	3.1	5.7	16	107	41	32	28	22	18	16
3	2.6	2.3	3.2	4.8	39	95	39	32	30	23	18	19
4	2.6	2.3	6.0	4.5	72	84	41	32	26	23	18	17
5	2.7	2.3	3.9	4.9	52	76	38	34	26	23	19	19
6	2.7	2.3	4.6	6.4	1,010	100	39	36	25	24	18	25
7	2.7	2.2	6.6	6.9	1,260	97	38	36	23	28	19	24
8	2.6	2.2	6.3	6.7	107	121	37	33	24	28	17	25
9	2.6	2.2	4.9	15	25	94	37	34	24	25	17	25
10	2.6	2.2	4.1	6.3	2,020	83	37	34	25	24	17	23
11	2.6	2.2	4.3	5.9	7,140	121	38	29	22	25	17	23
12	2.6	2.2	4.5	5.6	1,900	96	38	29	24	25	17	22
13	2.6	2.2	4.4	5.5	774	88	37	32	25	24	18	22
14	2.6	142	4.7	5.9	181	82	36	32	26	24	19	22
15	2.5	6.2	4.4	6.0	106	74	38	29	26	24	18	21
16	2.5	81	4.6	376	80	73	40	29	28	24	18	22
17	2.5	111	4.7	63	72	70	39	31	27	24	18	19
18	2.5	8.2	4.5	2,020	63	68	38	31	26	24	18	21
19	2.5	4.2	4.6	190	51	64	37	32	27	23	17	21
20	2.5	3.7	4.7	43	56	191	37	33	28	24	17	20
21	1.4	4.0	4.6	24	53	99	35	33	22	23	17	18
22	2.4	2.5	4.7	19	48	92	33	30	19	23	18	19
23	2.4	2.0	4.6	15	40	74	33	28	24	23	18	18
24	2.4	1.7	4.7	15	40	68	33	31	20	22	17	20
25	2.4	.90	4.9	13	44	64	34	31	21	22	16	17
26	2.4	2.1	4.8	14	43	65	34	28	19	23	16	19
27	2.4	2.7	5.0	14	224	60	33	27	15	21	16	16
28	2.4	3.7	4.8	10	261	57	33	25	16	22	16	12
29	2.4	4.4	5.0	14	------	54	33	25	11	22	16	13
30	2.3	3.2	5.1	17	------	49	33	24	23	21	16	15
31	2.4	------	5.3	17	------	46	------	24	------	19	16	------
TOTAL	77.2	412.70	144.4	2,959.6	15,794	2,639	1,102	948	706	725	538	590
MEAN	2.49	13.8	4.66	95.5	564	85.1	36.7	30.6	23.5	23.4	17.4	19.7
MAX	2.7	142	6.6	2,020	7,140	191	43	36	30	28	19	25
MIN	1.4	.90	2.8	4.5	16	46	33	24	11	19	16	12
AC-FT	153	819	286	5,870	31,330	5,230	2,190	1,880	1,400	1,440	1,070	1,170

CAL YR 1972 TOTAL 3,471.60 MEAN 9.49 MAX 142 MIN .90 AC-FT 6,890
WTR YR 1973 TOTAL 26,635.90 MEAN 73.0 MAX 7,140 MIN .90 AC-FT 52,830

PEAK DISCHARGE (BASE, 500 CFS)

DATE	TIME	DISCHARGE	DATE	TIME	DISCHARGE
11-14	1015	1,280	2-11	0515	15,700
1-16	1900	2,000	2-27	2045	1,120
1-18	1615	14,600	3-20	0415	979
2-6	2315	3,940			

11119500 CARPINTERIA CREEK NEAR CARPINTERIA, CALIF.

LOCATION.--Lat 34°24'05", long 119°29'10", in El Rincon Grant, Santa Barbara County, on right bank at downstream side of bridge on State Highway 150, 235 ft downstream from Gobernador Creek, and 1.8 miles northeast of Carpinteria.

DRAINAGE AREA.--13.1 sq mi.

PERIOD OF RECORD.--January 1941 to current year.

GAGE.--Water-stage recorder. Altitude of gage is 130 ft (from topographic map). Prior to July 1, 1958, at datum 6.00 ft higher. July 2, 1958, to Aug. 27, 1970, at site 35 ft upstream at datum 4.00 ft higher.

AVERAGE DISCHARGE.--32 years, 3.04 cfs (2,200 acre-ft per year).

EXTREMES.--Current year: Maximum discharge, 1,800 cfs Feb. 11 (gage height, 5.80 ft), from rating curve extended above 90 cfs on basis of slope-area measurement at gage height 14.10 ft; no flow many days.
Period of record: Maximum discharge, 8,880 cfs Dec. 27, 1971 (gage height, 14.10 ft, from floodmark), from rating curve extended above 130 cfs on basis of slope-area measurement of maximum flow; no flow at times in each year.

REMARKS.--Records poor. No regulation above station. Gobernador Land and Water Co. diverts from Gobernador Creek 1.8 miles above station. Small lake 0.8 mile southeast of station and outside the drainage area stores storm runoff and surplus water diverted by Gobernador Land and Water Co. from Gobernador Creek. At times this lake is drained by pumping water back into Gobernador Creek 1,000 ft above station.

DISCHARGE, IN CUBIC FEET PER SECOND, WATER YEAR OCTOBER 1972 TO SEPTEMBER 1973

DAY	OCT	NOV	DEC	JAN	FEB	MAR	APR	MAY	JUN	JUL	AUG	SEP
1	0	.05	0	.35	.21	26	13	3.9	2.1	.31	.02	.07
2	0	.07	0	.35	.17	15	13	3.7	2.1	.13	.07	.07
3	.01	.09	0	.30	.80	12	12	3.4	2.1	.04	.07	.07
4	0	.07	0	.21	35	10	12	3.4	2.1	.01	.20	.16
5	0	.14	0	.14	2.6	8.5	11	3.4	2.0	.04	.60	.31
6	.11	.09	.25	.21	74	9.0	11	3.7	1.4	.07	.70	.25
7	0	.07	.21	.21	49	10	10	3.7	1.3	.20	.13	0
8	.05	.07	.20	.25	18	32	9.6	3.7	1.0	.20	.05	0
9	.17	.07	.20	1.1	9.2	12	9.4	3.2	1.2	.13	0	0
10	0	.09	.19	.90	369	9.5	9.1	2.9	1.6	.05	0	.03
11	0	22	.19	.47	595	28	8.7	2.9	2.0	.05	.07	.04
12	.04	3.5	.19	.30	107	16	8.3	3.2	1.8	.07	.02	.01
13	.21	1.0	.18	.14	62	14	7.9	3.2	2.0	.16	0	0
14	1.6	68	.18	.09	30	13	7.6	3.2	1.8	.16	0	.13
15	.90	13	.17	.07	18	12	7.3	3.2	1.4	.16	0	.13
16	.11	80	.17	94	17	12	7.0	2.9	1.3	.13	0	.13
17	.09	18	.17	5.2	15	11	6.7	2.5	1.3	.05	0	.07
18	.09	2.4	.16	339	14	10	6.4	2.5	.90	.04	0	.02
19	.07	1.5	.16	110	13	9.5	6.1	2.5	.45	.03	0	.03
20	.07	1.0	.16	9.7	12	67	5.9	2.5	.16	.01	0	0
21	.09	.70	.15	9.0	11	25	5.7	2.5	.13	.02	0	0
22	.07	.50	.15	6.0	11	20	5.4	2.5	.13	.03	0	0
23	.09	.40	.15	5.0	10	17	5.2	2.5	.13	.07	0	.04
24	.07	.35	.14	4.0	11	16	5.0	2.5	.16	.02	.04	0
25	.05	.32	.05	1.0	12	15	4.8	2.3	.20	.01	.04	0
26	.05	.30	.11	.47	11	16	4.5	2.0	.20	.04	.13	0
27	.04	.27	.21	.30	65	16	4.3	1.4	.21	.04	.10	0
28	.05	0	.14	.17	149	16	4.5	1.3	.31	.04	.03	0
29	.05	0	.07	.09	------	15	4.8	1.2	.31	.07	.02	0
30	.05	0	.41	.47	------	15	4.5	1.4	.37	.10	.02	0
31	.03	------	.54	.35	------	14	------	2.0	------	.07	.05	------
TOTAL	4.16	214.05	4.90	589.84	1,720.98	521.5	230.9	85.2	32.16	2.55	2.36	1.56
MEAN	.13	7.14	.16	19.0	61.5	16.8	7.70	2.75	1.07	.082	.076	.052
MAX	1.6	80	.54	339	595	67	13	3.9	2.1	.31	.70	.31
MIN	0	0	0	.07	.17	8.5	4.3	1.2	.13	.01	0	0
AC-FT	8.3	425	9.7	1,170	3,410	1,030	458	169	64	5.1	4.7	3.1

CAL YR 1972 TOTAL 297.38 MEAN .81 MAX 80 MIN 0 AC-FT 590
WTR YR 1973 TOTAL 3,410.16 MEAN 9.34 MAX 595 MIN 0 AC-FT 6,760

PEAK DISCHARGE (BASE, 125 CFS)

DATE	TIME	G.H.	DISCHARGE	DATE	TIME	G.H.	DISCHARGE
11-11	0515	5.34	550	2-6	1830	5.61	706
11-14	0700	4.97	367	2-10	1300	5.68	1,710
11-15	2345	4.71	259	2-11	0115	5.80	1,800
11-16	0545	5.01	1,060	2-28	0100	4.88	1,170
1-18	1345	9.78	1,780	3-20	0245	3.30	340
2-4	0300	5.19	475				

NOTE.--No gage-height record Mar. 27 to Apr. 27.

11119530 FRANKLIN CREEK AT CARPINTERIA, CALIF.

LOCATION.--Lat 34°24'15", long 119°31'05", in Pueblo Lands of Santa Barbara, Santa Barbara County, on right bank 300 ft downstream from Malibu Drive bridge, 0.5 mile north of Carpinteria.

DRAINAGE AREA.--1.81 sq mi.

PERIOD OF RECORD.--October 1970 to current year.

GAGE.--Water-stage recorder and concrete channel. Altitude of gage is 30 ft (from topographic map).

EXTREMES.--Current year: Maximum discharge, 689 cfs Jan. 18 (gage height, 4.88 ft), from rating curve extended as explained below; minimum daily, 0.09 cfs Oct. 2.
Period of record: Maximum discharge, 1,600 cfs Dec. 27, 1971 (gage height, 6.1 ft, from floodmark), from rating curve extended above 25 cfs on basis of computation of flow in concrete channel; minimum daily, 0.01 cfs Oct. 1 to Nov. 24, 1970.

REMARKS.--Records poor. No regulation or diversion above station.

DISCHARGE, IN CUBIC FEET PER SECOND, WATER YEAR OCTOBER 1972 TO SEPTEMBER 1973

DAY	OCT	NOV	DEC	JAN	FEB	MAR	APR	MAY	JUN	JUL	AUG	SEP
1	.12	.16	.21	.14	.40	5.0	.50	.25	.37	.19	.50	.29
2	.09	.16	.21	.15	.70	3.0	.50	.25	.32	.30	.41	.29
3	.11	.16	.25	.16	1.5	2.3	.51	.25	.31	.33	.39	.29
4	.10	.16	.59	.16	1.8	1.5	.52	.25	.34	.35	.35	.29
5	.16	.10	.12	.17	1.2	1.1	.55	.25	.29	.18	.35	.29
6	.16	.10	.15	.15	8.6	4.0	.49	.25	.28	.25	.35	.28
7	.28	.12	.12	.11	9.8	3.0	.25	.25	.31	.41	.35	.25
8	.28	.21	.12	.12	4.0	5.8	.18	.25	.33	.45	.35	.20
9	.28	.15	.12	.80	2.5	3.2	.26	.25	.35	.50	.35	.20
10	.37	.10	.12	.94	20	2.3	.25	.25	.48	.49	.35	.20
11	.37	1.8	.12	.70	58	4.4	.25	.32	.42	.65	.35	.20
12	.37	.90	.12	.45	15	3.2	.25	.32	.41	.59	.35	.20
13	.37	.50	.12	.30	8.0	2.2	.25	.32	.44	.79	.35	.46
14	.91	8.0	.12	.37	6.0	1.8	.25	.32	.29	.73	.35	.59
15	1.6	2.0	.12	.33	3.7	1.5	.25	.32	.31	.62	.35	.54
16	1.2	24	.12	12	3.3	1.3	.24	.32	.34	.52	.35	.47
17	.94	20	.13	.50	3.4	1.7	.24	.32	.33	.50	.29	.59
18	.66	6.0	.13	81	4.0	2.7	.24	.32	.27	.51	.29	.66
19	.55	2.0	.13	1.6	2.0	2.9	.24	.32	.21	.43	.29	.55
20	.46	.50	.13	.80	1.2	12	.24	.32	.24	.35	.29	.46
21	.46	.35	.13	.66	1.1	3.1	.24	.32	.23	.37	.29	.66
22	.37	.25	.13	.55	1.0	2.5	.24	.32	.28	.34	.29	.55
23	.37	.20	.13	.55	1.5	2.1	.24	.32	.27	.31	.29	.46
24	.28	.19	.13	.46	2.4	1.9	.24	.32	.27	.25	.29	.37
25	.28	.19	.13	.46	1.1	1.7	.24	.32	.27	.26	.29	.28
26	.28	.19	.14	.40	5.0	1.5	.24	.32	.27	.37	.29	.21
27	.21	.18	.14	.35	25	1.0	.24	.32	.27	.27	.29	.37
28	.21	.18	.14	.30	20	.50	.28	.32	.47	.35	.29	.46
29	.16	.17	.14	.30	------	.47	.21	.32	.46	.28	.29	.46
30	.16	.17	.14	.32	------	.48	.21	.32	.19	.58	.29	.37
31	.16	------	.14	.35	------	.49	------	.33	------	.30	.29	------
TOTAL	12.32	69.19	4.74	105.65	212.20	80.64	8.84	9.23	9.62	12.82	10.20	11.49
MEAN	.40	2.31	.15	3.41	7.58	2.60	.29	.30	.32	.41	.33	.38
MAX	1.6	24	.59	81	58	12	.55	.33	.48	.79	.50	.66
MIN	.09	.10	.12	.11	.40	.47	.18	.25	.19	.18	.29	.20
AC-FT	24	137	9.4	210	421	160	18	18	19	25	20	23

CAL YR 1972 TOTAL 124.39 MEAN .34 MAX 24 MIN .07 AC-FT 247
WTR YR 1973 TOTAL 546.94 MEAN 1.50 MAX 81 MIN .09 AC-FT 1,080

NOTE.--No gage-height record Nov. 18 to Jan. 17, Feb. 4 to Apr. 5, May 1-31, Aug. 3 to Sept. 4.

11119750 MISSION CREEK NEAR MISSION STREET, AT SANTA BARBARA, CALIF.

LOCATION.--Lat 34°25'35", long 119°43'20", in Pueblo Lands of Santa Barbara, Santa Barbara County, on left bank just south of end of Los Olivos Street in Santa Barbara.

DRAINAGE AREA.--8.38 sq mi.

PERIOD OF RECORD.--October 1970 to current year.

GAGE.--Water-stage recorder. Concrete-lined channel. Altitude of gage is 105 ft (from topographic map).

EXTREMES.--Current year: Maximum discharge, 2,580 cfs Jan. 18 (gage height, 4.97 ft), from rating curve extended as explained below; no flow most of year.
Period of record: Maximum discharge, 2,580 cfs Jan. 18, 1973 (gage height, 4.97 ft), from rating curve extended above 1 cfs on basis of computation of flow in concrete-lined channel; no flow most of each year.

REMARKS.--Records poor. No regulation or diversion above station.

DISCHARGE, IN CUBIC FEET PER SECOND, WATER YEAR OCTOBER 1972 TO SEPTEMBER 1973

DAY	OCT	NOV	DEC	JAN	FEB	MAR	APR	MAY	JUN	JUL	AUG	SEP
1		0		0	0	10	3.5	.05				
2		0		0	0	0	3.2	.05				
3		0		0	5.8	0	2.9	0				
4		0		0	4.0	0	2.7	0				
5		0		0	.11	0	2.5	0				
6		0		0	37	0	2.4	0				
7		0		0	22	0	2.2	0				
8		0		0	0	16	2.0	0				
9		0		0	0	0	1.8	0				
10		0		0	210	0	1.7	0				
11		20		0	360	12	1.5	0				
12		0		0	81	0	1.4	0				
13		0		0	34	0	1.3	1.6				
14		170		0	5.0	0	1.2	0				
15		36		0	3.0	0	1.1	0				
16		139		114	1.6	0	1.0	0				
17		54		.18	1.1	0	.96	0				
18		0		468	.94	0	.90	0				
19		0		32	.80	5.6	.86	0				
20		0		0	.72	44	.80	0				
21		0		0	.64	10	.72	0				
22		0		0	.56	8.8	.68	0				
23		0		0	.50	7.6	.64	0				
24		0		.20	4.0	6.6	.62	0				
25		0		0	3.5	6.0	.58	0				
26		0		0	2.8	5.4	.53	0				
27		0		0	143	5.1	.46	0				
28		0		0	133	4.8	.46	0				
29		0		0	------	4.4	.46	0				
30		0		0	------	4.0	.26	0				
31		------		0	------	3.7	------	0	------			------
TOTAL	0	419	0	614.38	1,055.07	154.0	41.33	1.70	0	0	0	0
MEAN	0	14.0	0	19.8	37.7	4.97	1.38	.055	0	0	0	0
MAX	0	170	0	468	360	44	3.5	1.6	0	0	0	0
MIN	0	0	0	0	0	0	.26	0	0	0	0	0
AC-FT	0	831	0	1,220	2,090	305	82	3.4	0	0	0	0

CAL YR 1972 TOTAL 419.81 MEAN 1.15 MAX 170 MIN 0 AC-FT 833
WTR YR 1973 TOTAL 2,285.48 MEAN 6.26 MAX 468 MIN 0 AC-FT 4,530

PEAK DISCHARGE (BASE, 100 CFS)

DATE	TIME	G.H.	DISCHARGE	DATE	TIME	G.H.	DISCHARGE
11-11	0300	2.07	305	1-18	1500	4.97	2,580
11-14	0615	2.96	806	2-10	1300	2.28	410
11-15	2215	2.80	710	2-11	0215	2.85	740
11-16	2345	2.98	818	2-12	2030	1.90	230
11-17	0100	2.90	770	2-27	2015	2.89	764
1-16	1630	2.99	824	3-20	0145	2.09	315

NOTE.--No gage-height record Mar. 21 to Apr. 25.

11119760 VICTORIA STREET DRAIN AT OUTLET, AT SANTA BARBARA, CALIF.
(Formerly published as Victoria Street drain at outlet, near Santa Barbara)

LOCATION.--Lat 34°25'09", long 119°42'36", in Pueblo Lands of Santa Barbara, Santa Barbara County, on right downstream end of culvert at west end of Victoria Street in Santa Barbara.

DRAINAGE AREA.--0.625 sq mi.

PERIOD OF RECORD.--October 1970 to current year. Prior to October 1972, published as "near Santa Barbara."

GAGE.--Water-stage recorder and culvert control with rain-gage attachment. Datum of gage is 58.69 ft above mean sea level (Santa Barbara County Flood Control and Water Conservation District bench mark).

EXTREMES.--Current year: Maximum discharge, 155 cfs Feb. 27 (gage height, 4.01 ft); no flow most of year.
Period of record: Maximum discharge, 155 cfs Feb. 27, 1973 (gage height, 4.01 ft); no flow most of each year.
Flood of Jan. 25, 1969, reached a stage of 4.26 ft, from floodmark (discharge, 178 cfs).

REMARKS.--Records good. Flow is from street drainage (area of 399 acres). During periods of heavy rainfall flood gates on the upper end of this watershed could be closed which would reduce the drainage area by 140 acres.

DISCHARGE, IN CUBIC FEET PER SECOND, WATER YEAR OCTOBER 1972 TO SEPTEMBER 1973

DAY	OCT	NOV	DEC	JAN	FEB	MAR	APR	MAY	JUN	JUL	AUG	SEP
1	0	0	0	0	0	.60						
2	0	0	0	0	0	.10						
3	0	0	0	0	3.6	0						
4	0	1.7	1.4	0	1.8	0						
5	0	0	0	0	.51	0						
6	0	0	.42	0	7.6	1.2						
7	0	0	.04	0	1.4	.08						
8	0	0	0	.43	.10	2.0						
9	0	0	0	1.6	.03	.45						
10	0	1.1	0	.02	13	0						
11	0	3.7	0	0	11	.98						
12	0	0	0	0	3.9	0						
13	0	0	0	0	1.2	0						
14	.21	8.8	0	0	.68	0						
15	0	3.4	0	0	.01	0						
16	0	6.5	0	11	0	0						
17	0	4.1	0	.35	0	0						
18	0	.01	0	29	0	0						
19	0	.01	0	1.1	.37	1.7						
20	0	0	0	.04	.67	4.6						
21	0	0	0	0	0	1.3						
22	0	0	.08	0	0	.12						
23	0	0	0	0	0	0						
24	0	0	0	0	2.8	0						
25	0	0	0	0	0	0						
26	0	0	0	0	0	0						
27	0	0	0	0	12	0						
28	0	0	0	0	5.1	0						
29	0	0	0	0	------	0						
30	0	0	0	0	------	0						
31	0	------	0	0	------	0	------		------			------
TOTAL	.21	29.32	1.94	43.54	65.77	13.13	0	0	0	0	0	0
MEAN	.007	.98	.063	1.40	2.35	.42	0	0	0	0	0	0
MAX	.21	8.8	1.4	29	13	4.6	0	0	0	0	0	0
MIN	0	0	0	0	0	0	0	0	0	0	0	0
AC-FT	.4	58	3.8	86	130	26	0	0	0	0	0	0

CAL YR 1972 TOTAL 35.12 MEAN .096 MAX 8.8 MIN 0 AC-FT 70
WTR YR 1973 TOTAL 153.91 MEAN .42 MAX 29 MIN 0 AC-FT 305

NOTE.--No gage-height record Mar. 27 to Aug. 22.

11119780 ARROYO BURRO CREEK AT SANTA BARBARA, CALIF.

LOCATION.--Lat 34°26'13", long 119°44'44", in Pueblo Lands of Santa Barbara, Santa Barbara County, on right bank 0.4 mile south of State Street on Hope Avenue in Santa Barbara.

DRAINAGE AREA.--6.65 sq mi.

PERIOD OF RECORD.--October 1970 to current year.

GAGE.--Water-stage recorder. Concrete-lined channel. Altitude of gage is 160 ft (from topographic map).

EXTREMES.--Current year: Maximum discharge, 1,510 cfs Jan. 18 (gage height, 5.01 ft); no flow many months. Period of record: Maximum discharge, 1,510 cfs Jan. 18, 1973 (gage height, 5.01 ft); no flow most of each year.

REMARKS.--Records poor. Small amount of inflow may occur from large shopping center that empties water directly into the stream. Partial regulation by Lauro Canyon Reservoir on San Roque Creek.

DISCHARGE, IN CUBIC FEET PER SECOND, WATER YEAR OCTOBER 1972 TO SEPTEMBER 1973

DAY	OCT	NOV	DEC	JAN	FEB	MAR	APR	MAY	JUN	JUL	AUG	SEP
1	0	0	.02	.01	0	16	1.7	.04			0	.01
2	.01	0	.02	.01	0	12	1.5	.02			0	.01
3	.01	0	.02	.01	20	8.5	1.4	.01			0	0
4	.01	.85	2.7	.01	15	6.5	1.2	0			0	.01
5	.01	0	.02	0	8.1	5.2	1.1	0			.01	.01
6	0	0	.33	0	59	9.3	1.0	0			0	0
7	0	0	.02	0	23	6.6	.90	0			0	.01
8	0	0	.02	.74	1.0	12	.83	0			0	0
9	0	0	.02	.54	.50	8.4	.77	0			.02	.35
10	0	.19	.02	.10	165	6.4	.71	0			.03	.02
11	0	26	.02	.05	255	11	.65	0			0	0
12	0	0	.02	.03	61	8.0	.61	0			.01	0
13	0	0	.02	.01	30	6.0	.57	0			0	.01
14	.54	59	.02	0	12	4.6	.54	0			0	.01
15	0	32	.02	0	11	3.7	.51	0			0	0
16	0	125	.02	48	9.6	3.0	.48	0			0	0
17	0	45	.02	.10	8.3	2.6	.44	0			0	.07
18	0	1.0	.02	270	7.1	2.2	.40	0			.01	.01
19	0	.20	.02	16	5.9	1.8	.36	0			0	.02
20	0	.10	.02	.10	4.6	41	.33	0			0	.01
21	0	.01	.02	.10	3.2	24	.29	0			0	.01
22	0	.01	.02	.10	2.2	15	.26	0			0	.01
23	0	.01	.02	.10	1.6	11	.22	0			.01	.01
24	0	.02	.02	.10	11	7.8	.19	0			.01	.04
25	0	.02	.02	.10	8.0	6.1	.17	0			.01	.03
26	0	.02	.02	.06	5.0	4.9	.15	0			0	.06
27	0	.02	.02	.04	128	3.9	.13	0			.01	.03
28	0	.02	.02	.01	74	3.3	.11	0			.01	.03
29	0	.02	.02	0	------	2.8	.10	0			.01	.05
30	0	.02	.02	0	------	2.3	.07	0			.01	.05
31	0	------	.02	0	------	2.0	------	0	------		.01	------
TOTAL	.58	289.51	3.61	336.32	929.10	257.9	17.69	.07	0	0	.16	.87
MEAN	.019	9.65	.12	10.8	33.2	8.32	.59	.002	0	0	.005	.029
MAX	.54	125	2.7	270	255	41	1.7	.04	0	0	.03	.35
MIN	0	0	.02	0	0	1.8	.07	0	0	0	0	0
AC-FT	1.2	574	7.2	667	1,840	512	35	.1	0	0	.3	1.7

CAL YR 1972 TOTAL 302.97 MEAN .83 MAX 125 MIN 0 AC-FT 601
WTR YR 1973 TOTAL 1,835.81 MEAN 5.03 MAX 270 MIN 0 AC-FT 3,640

PEAK DISCHARGE (BASE, 300 CFS)

DATE	TIME	G.H.	DISCHARGE	DATE	TIME	G.H.	DISCHARGE
11-11	0300	3.37	638	2-3	2100	2.79	406
11-14	0545	3.05	510	2-10	1315	2.67	358
11-16	0300	3.88	890	2-11	0600	3.31	614
11-17	0045	2.96	474	2-27	1945	3.64	770
1-16	1600	2.54	312	2-28	0130	2.53	309
1-18	1430	5.01	1,510	3-20	0145	2.74	386

11119940 MARIA YGNACIO CREEK AT UNIVERSITY DRIVE, NEAR GOLETA, CALIF.

LOCATION.--Lat 34°26'42", long 119°48'10", in Goleta Grant, Santa Barbara County, on right bank at University Drive, 0.2 mile east of Patterson Avenue, and 1.5 miles northeast of Goleta.

DRAINAGE AREA.--6.35 sq mi.

PERIOD OF RECORD.--October 1970 to current year.

GAGE.--Water-stage recorder and concrete control. Altitude of gage is 60 ft (from topographic map).

EXTREMES.--Current year: Maximum discharge, 1,470 cfs Jan. 18 (gage height, 4.06 ft), from rating curve extended as explained below; no flow most of year.
Period of record: Maximum discharge, 1,470 cfs Jan. 18, 1973 (gage height, 4.06 ft), from rating curve extended above 260 cfs on basis of computation of flow in trapezoidal section; no flow most of each year.

REMARKS.--Records good except those for periods of no gage-height record, which are poor. No regulation. Some pumping for irrigation.

DISCHARGE, IN CUBIC FEET PER SECOND, WATER YEAR OCTOBER 1972 TO SEPTEMBER 1973

DAY	OCT	NOV	DEC	JAN	FEB	MAR	APR	MAY	JUN	JUL	AUG	SEP
1		0	0	0	0	25	1.9	.25		0		
2		0	0	0	0	19	1.7	.17		0		
3		0	0	0	0	15	1.6	.13		0		
4		0	.90	0	2.7	9.7	1.4	.10		0		
5		0	0	0	.44	4.0	1.3	0		0		
6		0	.40	0	15	15	1.1	0		0		
7		0	.16	0	11	19	1.0	0		0		
8		0	0	.16	.73	34	.96	0		0		
9		0	0	.90	.27	18	.88	0		0		
10		.05	0	.07	59	9.8	.80	0		0		
11		2.0	0	0	208	28	.75	0		0		
12		.10	0	0	101	16	.69	0		0		
13		.10	0	0	80	7.4	.64	0		0		
14		5.0	0	0	40	4.5	.60	0		0		
15		5.5	0	0	30	3.1	.56	0		0		
16		7.0	0	24	20	2.4	.54	0		0		
17		.80	0	5.0	10	2.1	.52	0		.07		
18		.80	0	201	5.0	1.8	.48	0		0		
19		.25	0	15	2.5	3.3	.46	0		0		
20		0	0	3.3	1.6	40	.44	0		0		
21		0	0	1.3	1.5	20	.42	0		0		
22		0	0	.66	1.2	16	.40	0		0		
23		0	0	.40	1.1	5.2	.38	0		0		
24		0	0	.20	4.0	4.5	.36	0		0		
25		0	0	.10	2.0	4.0	.35	0		0		
26		0	0	.07	1.0	3.5	.34	0		0		
27		0	0	0	60	2.9	.33	0		0		
28		0	0	0	50	2.7	.32	0		0		
29		0	0	0	------	2.5	.30	0		0		
30		.40	0	0	------	2.3	.27	0		.02		
31		------	0	0	------	2.1	------	0	------	0		------
TOTAL	0	22.00	1.46	252.16	708.04	342.8	21.79	.65	0	.09	0	0
MEAN	0	.73	.047	8.13	25.3	11.1	.73	.021	0	.003	0	0
MAX	0	7.0	.90	201	208	40	1.9	.25	0	.07	0	0
MIN	0	0	0	0	0	1.8	.27	0	0	0	0	0
AC-FT	0	44	2.9	500	1,400	680	43	1.3	0	.2	0	0

CAL YR 1972 TOTAL 24.71 MEAN .06 MAX 7.0 MIN 0 AC-FT 49
WTR YR 1973 TOTAL 1,348.99 MEAN 3.70 MAX 208 MIN 0 AC-FT 2,680

PEAK DISCHARGE (BASE, 75 CFS)

DATE	TIME	G.H.	DISCHARGE	DATE	TIME	G.H.	DISCHARGE
11-15	2215	2.14	200	2-11	unknown	3.10	730
1-16	1545	1.86	91	2-27	1830	2.06	196
1-18	1445	4.06	1,470	3-8	0700	1.77	82
2-10	1345	2.48	375				

NOTE.--No gage-height record Nov. 20 to Dec. 20, Jan. 27 to Feb. 3, Feb. 11-28, Mar. 24 to May 30.

11120000 ATASCADERO CREEK NEAR GOLETA, CALIF.

LOCATION (revised).--Lat 34°25'30", long 119°48'35", in La Goleta Grant, Santa Barbara County, on downstream side of center pier of county road bridge 100 ft downstream from Maria Ygnacio Creek, 1.3 miles upstream from mouth, and 1.3 miles southeast of Goleta.

DRAINAGE AREA.--18.9 sq mi.

PERIOD OF RECORD.--October 1941 to current year. Prior to October 1947, published as Alascadero Creek near Goleta.

GAGE.--Water-stage recorder. Datum of gage is 12.59 ft above mean sea level (Santa Barbara County bench mark). Prior to Dec. 14, 1967, at site 275 ft downstream at same datum.

AVERAGE DISCHARGE.--32 years, 4.30 cfs (3,120 acre-ft per year).

EXTREMES.--Current year: Maximum discharge, 5,380 cfs Jan. 18 (gage height, 13.1 ft), from rating curve extended above 2,300 cfs; no flow many days.
Period of record: Maximum discharge, 5,380 cfs Jan. 18, 1973 (gage height, 13.1 ft), from rating curve extended above 2,300 cfs; no flow many days in each year.

REMARKS.--Records fair. No regulation above station. Small diversions for irrigation above station. At times low flow results from return irrigation waste water. At other times Lake Cachuma water is wasted to channel.

DISCHARGE, IN CUBIC FEET PER SECOND, WATER YEAR OCTOBER 1972 TO SEPTEMBER 1973

DAY	OCT	NOV	DEC	JAN	FEB	MAR	APR	MAY	JUN	JUL	AUG	SEP
1	0	0	.24	.03	.05	70	4.6	.21	.12	.57	0	.02
2	0	.04	.31	.03	.04	57	4.0	.18	.18	.45	0	.01
3	0	.03	.15	.05	7.4	50	3.5	.15	.21	.30	0	0
4	0	2.9	10	.05	14	47	3.2	.08	.51	.35	0	.01
5	.24	2.5	.31	.03	5.2	45	2.8	.08	.30	.35	0	0
6	1.2	.19	1.4	.03	81	60	2.7	.08	.08	.25	0	0
7	2.1	.03	1.9	.04	39	49	2.6	.06	.06	.21	.02	0
8	1.9	0	.15	.81	9.0	84	2.4	.06	.06	.18	.12	0
9	1.2	0	.09	8.6	6.0	50	2.3	.06	.06	.15	.06	0
10	.58	0	.09	1.8	542	52	2.3	.06	.04	.12	0	0
11	.32	80	.09	.45	752	76	2.1	.10	.10	.18	0	0
12	.15	2.4	1.1	.74	171	48	2.3	.15	.64	.15	0	0
13	.01	.71	2.4	.45	84	39	2.3	.15	.51	.21	0	0
14	.40	264	1.4	.24	41	36	1.7	.18	.21	.25	0	0
15	4.3	211	.35	.67	31	36	1.6	.12	.12	.21	0	0
16	.79	548	1.1	290	25	36	1.6	.10	.12	.18	0	.08
17	.31	217	1.7	16	20	45	1.3	.10	.12	.25	.02	.08
18	.14	5.9	.81	760	14	47	1.3	.08	.06	.21	.12	0
19	.11	2.5	.07	66	11	51	1.1	.08	.01	.71	.12	.02
20	.04	.97	.07	22	9.0	140	1.1	.12	0	.86	.04	0
21	14	.61	.07	6.7	7.1	24	1.2	.10	.01	.35	0	0
22	11	.50	.09	5.0	5.9	17	.78	.10	.02	.18	0	0
23	11	.45	.05	1.3	5.8	15	.64	.12	.02	.08	0	0
24	7.5	.40	.04	.67	21	13	.57	.15	.01	.01	0	0
25	.82	.31	.03	.55	6.8	13	.45	.18	0	0	.06	0
26	.23	.27	.03	.55	6.1	12	.35	.15	.01	0	.02	.04
27	.07	.24	.03	.40	440	8.7	.35	.12	.02	.25	.09	.35
28	0	.10	.03	.40	180	8.0	.45	.08	.10	.15	.04	.21
29	0	.12	.03	.18	------	7.0	.51	.25	.71	.06	.01	.51
30	0	.07	.04	.15	------	6.0	.30	.35	.78	.01	.02	1.1
31	0	------	.04	.07	------	5.2	------	.15	------	0	.06	------
TOTAL	58.41	1,341.24	24.21	1,183.99	2,534.39	1,246.9	52.40	3.95	5.19	7.23	.80	2.43
MEAN	1.88	44.7	.78	38.2	90.5	40.2	1.75	.13	.17	.23	.026	.081
MAX	14	548	10	760	752	140	4.6	.35	.78	.86	.12	1.1
MIN	0	0	.03	.03	.04	5.2	.30	.06	0	0	0	0
AC-FT	116	2,660	48	2,350	5,030	2,470	104	7.8	10	14	1.6	4.8

CAL YR 1972 TOTAL 1,500.53 MEAN 4.10 MAX 548 MIN 0 AC-FT 2,980
WTR YR 1973 TOTAL 6,461.14 MEAN 17.7 MAX 760 MIN 0 AC-FT 12,820

PEAK DISCHARGE (BASE, 100 CFS)

DATE	TIME	G.H.	DISCHARGE	DATE	TIME	G.H.	DISCHARGE
11-11	0430	8.15	720	2-10	1415	10.24	2,310
11-14	0600	10.48	2,310	2-11	0245	10.42	2,460
11-15	2330	12.16	3,990	2-12	2100	8.80	1,310
11-17	0115	9.87	1,740	2-27	1715	10.59	2,600
1-16	1615	10.22	2,050	3-8	0645	5.82	390
1-18	1400	13.1	5,380	3-11	0630	5.09	230
2-6	2030	7.11	343	3-20	0200	7.59	886

11120500 SAN JOSE CREEK NEAR GOLETA, CALIF.

LOCATION.--Lat 34°27'33", long 119°48'29", in La Goleta Grant, Santa Barbara County, on right bank at Patterson Avenue bridge, 1.1 miles downstream from unnamed tributary, and 1.7 miles northeast of Goleta.

DRAINAGE AREA.--5.51 sq mi.

PERIOD OF RECORD.--January 1941 to current year.

GAGE.--Water-stage recorder and concrete low-water control. Datum of gage is 95.61 ft above mean sea level (Santa Barbara County Road Department bench mark). Prior to Dec. 24, 1955, at datum 5.50 ft higher. Dec. 24, 1955, to Jan. 10, 1960, at datum 1.5 ft higher. Prior to Oct. 1, 1971, at site 75 ft downstream at same datum.

AVERAGE DISCHARGE.--32 years, 1.86 cfs (1,350 acre-ft per year).

EXTREMES.--Current year: Maximum discharge, 1,220 cfs Jan. 18 (gage height, 8.82 ft), from rating curve extended above 130 cfs on basis of maximum discharge at old gage site 75 ft downstream; no flow Oct. 5, 8.
Period of record: Maximum discharge, 2,000 cfs Jan. 25, 1969 (gage height, 10.10 ft), from rating curve extended above 400 cfs on basis of slope-area measurement at gage height 9.32 ft; maximum gage height, 12.74 ft, present datum, Jan. 21, 1943; no flow at times in each year.

REMARKS.--Records good. No regulation above station. Many small diversions for irrigation above station.

DISCHARGE, IN CUBIC FEET PER SECOND, WATER YEAR OCTOBER 1972 TO SEPTEMBER 1973

DAY	OCT	NOV	DEC	JAN	FEB	MAR	APR	MAY	JUN	JUL	AUG	SEP
1	.04	.17	.27	.34	.80	21	3.0	1.1	1.2	.38	.20	.06
2	.04	.13	.22	.61	.77	13	2.8	.94	1.1	.38	.16	.20
3	.04	.13	.22	.63	.74	8.9	2.6	.94	.95	.37	.18	.22
4	.03	.57	.33	.63	8.9	7.2	2.2	.94	1.2	.37	.21	.22
5	0	.75	.33	.70	4.1	6.8	2.2	.89	.78	.36	.22	.22
6	.01	.59	.27	.43	31	14	2.0	1.1	.62	.36	.21	.21
7	.05	.07	.27	.36	37	9.9	1.6	1.2	.54	.35	.20	.16
8	0	.06	.33	.74	11	22	1.5	1.1	.54	.35	.22	.09
9	.01	.06	.33	2.2	6.4	9.9	1.5	.91	.54	.34	.22	.10
10	.05	.17	.33	2.9	118	7.2	1.3	.99	.63	.33	.22	.23
11	.09	3.8	.33	1.8	159	16	1.3	1.1	.63	.32	.22	.25
12	.18	.82	.27	1.3	40	8.4	1.2	1.2	.63	.32	.22	.18
13	.26	.54	.27	.82	28	6.4	1.2	1.4	.63	.31	.22	.18
14	.45	22	.27	1.1	14	5.0	1.2	1.4	.62	.30	.22	.17
15	.37	1.4	.27	.94	9.6	4.4	1.1	1.3	.63	.29	.24	.24
16	.09	40	.27	40	8.0	3.6	1.2	1.4	.63	.29	.13	.21
17	.06	17	.22	11	6.0	5.6	1.2	1.8	.59	.28	.11	.27
18	.06	2.6	.18	215	5.0	8.4	1.2	1.8	.65	.28	.10	.23
19	.08	1.5	.18	16	4.3	8.9	1.2	1.7	.59	.27	.06	.18
20	.06	.80	.22	8.0	3.8	44	1.2	1.7	.47	.27	.05	.13
21	.06	.39	.22	4.8	3.4	15	1.1	1.8	.40	.26	.03	.12
22	.17	.27	.31	3.1	3.1	13	1.0	1.9	.33	.26	.06	.09
23	.22	.29	.33	2.1	2.7	8.9	1.0	1.8	.33	.25	.06	.09
24	.22	.26	.33	1.7	9.7	7.5	1.1	1.9	.40	.25	.06	.09
25	.21	.27	.28	1.4	4.9	6.8	1.3	1.8	.40	.24	.06	.08
26	.27	.31	.27	1.3	3.3	6.0	1.1	1.7	.40	.24	.06	.05
27	.27	.26	.27	1.2	80	5.2	1.1	1.6	.39	.23	.07	.07
28	.09	.27	.27	1.1	61	5.0	.94	1.6	.39	.23	.08	.11
29	.19	.27	.27	1.0	------	4.4	.94	1.3	.39	.23	.06	.08
30	.18	.27	.31	.90	------	3.8	.97	.99	.39	.23	.08	.08
31	.17	------	.52	.86	------	3.3	------	1.2	------	.22	.06	------
TOTAL	4.02	96.02	8.76	324.96	664.51	309.5	43.25	42.50	17.99	9.16	4.29	4.61
MEAN	.13	3.20	.28	10.5	23.7	9.98	1.44	1.37	.60	.30	.14	.15
MAX	.45	40	.52	215	159	44	3.0	1.9	1.2	.38	.24	.27
MIN	0	.06	.18	.34	.74	3.3	.94	.89	.33	.22	.03	.05
AC-FT	8.0	190	17	645	1,320	614	86	84	36	18	8.5	9.1

CAL YR 1972 TOTAL 170.36 MEAN .47 MAX 40 MIN 0 AC-FT 338
WTR YR 1973 TOTAL 1,529.57 MEAN 4.19 MAX 215 MIN 0 AC-FT 3,030

PEAK DISCHARGE (BASE, 100 CFS)

DATE	TIME	G.H.	DISCHARGE	DATE	TIME	G.H.	DISCHARGE
11-14	0800	4.49	140	2-10	1245	5.52	409
11-16	0230	5.30	306	2-27	1900	5.13	322
1-16	1630	5.10	261	3-20	0200	4.24	152
1-18	unknown	8.82	1,220				

NOTE.--No gage-height record Jan. 18, Jan. 19. Stage-discharge indefinite June 28 to Aug. 1.

11120510 SAN JOSE CREEK AT GOLETA, CALIF.

LOCATION.--Lat 34°25'49", long 119°49'16", in La Goleta Grant, Santa Barbara County, on right bank south of Hollister Avenue and Kellogg Road, 0.5 mile southeast of Goleta.

DRAINAGE AREA.--9.42 sq mi.

PERIOD OF RECORD.--October 1970 to current year.

GAGE.--Water-stage recorder. Altitude of gage is 10 ft (from topographic map).

EXTREMES.--Current year: Maximum discharge, 1,660 cfs Jan. 18 (gage height, 5.21 ft), from rating curve extended as explained below; no flow for several months.
Period of record: Maximum discharge, 1,660 cfs Jan. 18, 1973 (gage height, 5.21 ft), from rating curve extended above 400 cfs on basis of computation of flow in concrete canal at gage height 8.0 ft; no flow for long periods in each year.

REMARKS.--Records fair except those below 1.0 cfs, which are poor. No regulation above station. Diversions for irrigation and domestic use above station.

DISCHARGE, IN CUBIC FEET PER SECOND, WATER YEAR OCTOBER 1972 TO SEPTEMBER 1973

DAY	OCT	NOV	DEC	JAN	FEB	MAR	APR	MAY	JUN	JUL	AUG	SEP
1	0	0	0	0	.13	22	2.6	.86	.38	.04	.01	.01
2	.01	0	0	0	.11	17	2.0	.85	.37	.04	.01	0
3	.01	0	0	0	.10	14	2.0	.83	.35	.04	.01	0
4	.01	0	.58	0	1.6	12	1.6	.81	.33	.03	.01	0
5	.01	0	.01	0	1.5	9.0	1.2	.79	.32	.03	.01	0
6	.01	0	.12	0	34	7.4	1.1	.77	.31	.03	.01	0
7	.01	0	.07	0	48	6.9	1.2	.75	.30	.03	.01	0
8	.01	0	.01	.01	14	51	1.2	.73	.28	.03	.01	0
9	.01	0	.01	.31	3.2	24	1.4	.71	.26	.03	.01	0
10	.01	0	0	.08	196	16	1.4	.69	.24	.03	.01	0
11	.01	16	0	.01	283	47	1.2	.68	.23	.02	.01	0
12	.01	.02	0	.01	80	24	1.2	.66	.21	.02	.01	0
13	.01	.02	0	.01	53	16	1.1	.64	.19	.02	.01	0
14	.01	50	0	.01	23	12	1.1	.62	.18	.02	.01	0
15	.01	27	0	.01	19	8.5	1.1	.60	.17	.02	0	.01
16	.01	108	0	72	16	6.2	1.0	.59	.15	.02	0	.01
17	.01	28	0	11	13	4.6	1.0	.58	.14	.01	0	.01
18	.01	.35	0	366	9.8	3.9	1.0	.57	.13	.01	0	0
19	.01	.08	0	56	7.2	3.5	1.0	.56	.12	.01	0	.01
20	.01	.03	0	27	5.4	82	.95	.55	.10	.01	0	0
21	0	.02	0	20	4.2	23	.95	.53	.09	.01	0	0
22	0	.02	0	14	3.4	18	.95	.52	.08	.01	0	0
23	0	.02	0	6.6	2.1	15	.95	.50	.07	0	.01	0
24	0	.01	0	3.3	2.3	13	.95	.49	.06	0	.03	0
25	0	.01	0	1.9	2.6	11	.90	.48	.05	0	.01	.03
26	0	.01	0	1.2	2.3	8.0	.90	.46	.04	0	0	0
27	0	.01	0	.74	137	6.4	.90	.44	.04	0	0	0
28	0	0	0	.44	80	4.6	.90	.43	.04	0	0	0
29	0	0	0	.29	------	4.0	.90	.42	.04	0	0	0
30	0	0	0	.21	------	3.6	.88	.41	.04	0	.01	0
31	0	------	0	.17	------	3.2	------	.40	------	.01	.01	------
TOTAL	.19	229.60	.80	581.30	1,041.94	496.8	35.53	18.92	5.31	.52	.21	.08
MEAN	.006	7.65	.026	18.8	37.2	16.0	1.18	.61	.18	.017	.007	.003
MAX	.01	108	.58	366	283	82	2.6	.86	.38	.04	.03	.03
MIN	0	0	0	0	.10	3.2	.88	.40	.04	0	0	0
AC-FT	.4	455	1.6	1,150	2,070	985	70	38	11	1.0	.4	.2

CAL YR 1972 TOTAL 242.07 MEAN .66 MAX 108 MIN 0 AC-FT 480
WTR YR 1973 TOTAL 2,411.20 MEAN 6.61 MAX 366 MIN 0 AC-FT 4,780

PEAK DISCHARGE (BASE, 150 CFS)

DATE	TIME	G.H.	DISCHARGE	DATE	TIME	G.H.	DISCHARGE
11-11	0315	3.06	514	2-10	1330	3.45	670
11-14	0600	2.57	334	2-12	2030	2.51	314
11-15	2300	3.35	630	2-27	1915	3.10	530
1-16	1615	2.80	415	3-8	0630	2.04	157
1-18	1445	5.21	1,660	3-20	0200	2.47	300
2-6	1930	2.19	205				

NOTE.--No gage-height record Oct. 1 to Nov. 10. Stage discharge relation indefinite Apr. 16 to July 31.

11120550 GAVIOTA CREEK NEAR GAVIOTA, CALIF.

LOCATION.--Lat 34°29'16", long 120°13'34", in Nuestra Senora Del Refugio Grant, Santa Barbara County, on left bank 1.3 miles northwest of Gaviota, and 1.6 miles upstream from mouth.

DRAINAGE AREA.--18.8 sq mi.

PERIOD OF RECORD.--October 1966 to current year.

GAGE.--Water-stage recorder. Altitude of gage is 100 ft (from topographic map).

AVERAGE DISCHARGE.--7 years, 5.13 cfs (3,720 acre-ft per year).

EXTREMES.--Current year: Maximum discharge, 3,940 cfs Jan. 18 (gage height, 8.36 ft), from rating curve extended as explained below; no flow many days.
Period of record: Maximum discharge, 4,000 cfs Jan. 24, 1967 (gage height, 8.40 ft), from rating curve extended above 1,300 cfs on basis of slope-area measurement of maximum flow; no flow at times in some years.

REMARKS.--Records good. No regulation. Small pumping for domestic and resort use.

DISCHARGE, IN CUBIC FEET PER SECOND, WATER YEAR OCTOBER 1972 TO SEPTEMBER 1973

DAY	OCT	NOV	DEC	JAN	FEB	MAR	APR	MAY	JUN	JUL	AUG	SEP
1	0	0	.25	.30	1.2	58	11	4.2	2.3	.68	.50	.35
2	0	0	.20	.30	1.1	37	11	3.8	2.1	.64	.49	.35
3	0	0	.20	.35	4.0	28	10	3.7	2.0	.62	.48	.36
4	0	.01	4.4	.42	6.2	24	9.7	3.7	1.9	.57	.53	.43
5	0	0	.45	.35	19	20	9.2	3.7	1.8	.60	.68	.42
6	0	0	2.3	.42	121	25	9.1	3.6	1.7	.60	.73	.31
7	0	0	1.7	.42	56	25	8.8	3.3	1.5	.62	.54	.27
8	0	0	.48	1.2	21	33	8.1	3.2	1.5	.69	.46	.28
9	0	0	.33	5.1	13	19	8.0	3.1	1.4	.70	.44	.31
10	0	0	.30	2.2	187	17	7.8	3.0	1.5	.69	.48	.35
11	0	2.0	.30	.57	454	24	7.5	3.0	1.6	.66	.51	.32
12	6.1	.01	.30	.49	185	16	7.3	3.2	1.5	.69	.51	.33
13	.53	0	.30	.49	84	14	7.0	3.1	1.4	.79	.47	.37
14	.09	31	.23	.49	32	13	6.8	3.0	1.3	.80	.49	.39
15	.10	12	.23	.49	22	12	6.7	2.9	1.3	.78	.52	.38
16	0	49	.25	116	17	11	6.4	2.8	1.3	.69	.48	.37
17	0	33	.25	12	15	10	6.3	2.8	1.3	.61	.46	.36
18	0	2.8	.25	675	13	9.7	6.0	2.7	1.2	.59	.45	.33
19	0	.75	.21	50	12	11	5.8	2.7	.97	.56	.38	.33
20	0	.65	.20	10	11	82	5.6	2.8	.93	.55	.34	.31
21	0	.42	.21	6.6	10	40	5.2	2.7	.85	.57	.29	.29
22	0	.35	.22	4.2	8.7	28	5.1	2.7	.83	.59	.28	.28
23	0	.35	.24	3.1	8.2	20	5.2	2.5	.82	.52	.27	.28
24	0	.30	.24	2.6	100	19	5.2	2.5	.89	.48	.27	.27
25	0	.30	.21	2.2	24	18	5.2	2.4	.83	.44	.30	.27
26	0	.30	.23	2.0	14	17	5.1	2.2	.75	.44	.31	.23
27	0	.30	.27	1.6	540	16	4.7	2.1	.72	.46	.29	.21
28	0	.30	.30	1.5	151	14	4.8	2.0	.75	.51	.30	.18
29	0	.25	.27	1.7	------	13	4.7	2.0	.71	.50	.33	.19
30	0	.25	.30	1.6	------	13	4.5	2.1	.69	.48	.34	.25
31	0	------	.30	1.3	------	12	------	2.4	------	.50	.34	------
TOTAL	6.82	134.34	15.92	904.99	2,130.4	698.7	207.8	89.9	38.34	18.62	13.26	9.37
MEAN	.22	4.48	.51	29.2	76.1	22.5	6.93	2.90	1.28	.60	.43	.31
MAX	6.1	49	4.4	675	540	82	11	4.2	2.3	.80	.73	.43
MIN	0	0	.20	.30	1.1	9.7	4.5	2.0	.69	.44	.27	.18
AC-FT	14	266	32	1,800	4,230	1,390	412	178	76	37	26	19

CAL YR 1972 TOTAL 203.84 MEAN .56 MAX 49 MIN 0 AC-FT 404
WTR YR 1973 TOTAL 4,268.46 MEAN 11.7 MAX 675 MIN 0 AC-FT 8,470

PEAK DISCHARGE (BASE, 100 CFS)

DATE	TIME	G.H.	DISCHARGE	DATE	TIME	G.H.	DISCHARGE
11-14	0645	4.39	238	2-10	1200	5.11	685
11-15	2400	5.13	630	2-11	0430	6.14	1,350
11-17	0115	4.31	218	2-12	2045	5.87	1,150
1-16	1445	5.03	645	2-24	0730	4.44	386
1-18	1300	8.36	3,940	2-27	1045	5.90	1,170
2-5	2330	3.97	232	3-20	0145	4.45	390
2-6	1550	4.10	270				

11120600 JALAMA CREEK NEAR LOMPOC, CALIF.

LOCATION.--Lat 34°30'50", long 120°29'02", in San Julian Grant, Santa Barbara County, on downstream side of right bridge pier on Jalama Road, 0.6 mile downstream from Gasper Creek, 1.4 miles upstream from mouth, and 8.9 miles southwest of Lompoc.

DRAINAGE AREA.--20.5 sq mi.

PERIOD OF RECORD.--September 1965 to current year.

GAGE.--Water-stage recorder and concrete control. Altitude of gage is 80 ft (from topographic map).

AVERAGE DISCHARGE.--8 years, 3.14 cfs (2,280 acre-ft per year).

EXTREMES.--Current year: Maximum discharge, 3,530 cfs Jan. 18 (gage height, 9.97 ft), from rating curve extended as explained below; no flow Oct. 1 to Nov. 13, Nov. 20 to Dec. 3.
Period of record: Maximum discharge, 3,530 cfs Jan. 18, 1973 (gage height, 9.97 ft), from rating curve extended above 1,100 cfs on basis of slope-area measurement at gage height 8.05 ft; no flow many days in most years.

REMARKS.--Records good. No regulation or diversion above station. Pumping from wells for irrigation of about 400 acres.

DISCHARGE, IN CUBIC FEET PER SECOND, WATER YEAR OCTOBER 1972 TO SEPTEMBER 1973

DAY	OCT	NOV	DEC	JAN	FEB	MAR	APR	MAY	JUN	JUL	AUG	SEP
1		0	0	.01	.76	70	4.9	1.5	1.1	.30	.07	.31
2		0	0	.01	.65	35	4.6	1.4	.97	.26	.05	.31
3		0	0	0	.97	20	4.3	1.4	.84	.26	.05	.13
4		0	.26	0	1.3	11	4.0	1.3	.91	.21	.05	.21
5		0	.02	0	.79	6.0	3.8	1.3	.80	.17	.10	.26
6		0	.04	0	90	7.6	3.6	1.3	.36	.17	.13	.10
7		0	.26	0	39	5.8	3.5	1.3	.54	.17	.10	.05
8		0	.04	.02	14	11	3.3	1.3	.42	.17	.07	.05
9		0	.03	1.0	8.1	8.0	3.2	1.3	.43	.21	.04	.05
10		0	.01	2.0	107	6.6	3.1	1.3	.50	.17	.03	.05
11		0	.01	.13	168	10	2.9	1.2	.53	.17	.03	.07
12		0	.01	.03	90	8.0	2.8	1.3	.51	.17	.04	.10
13		0	.01	.02	60	7.2	2.7	1.4	.52	.21	.03	.13
14		6.7	.01	.01	30	6.8	2.6	1.4	.48	.26	.03	.21
15		.04	.02	.01	20	6.6	2.5	1.4	.46	.31	.03	.21
16		11	.02	185	12	6.0	2.4	1.3	.46	.26	.03	.21
17		28	.01	12	8.0	5.7	2.3	1.2	.46	.26	.02	.21
18		.21	.01	585	6.4	5.2	2.2	1.2	.44	.26	.02	.17
19		.02	.01	18	4.5	5.4	2.1	1.2	.33	.21	.02	.10
20		0	.01	11	4.0	46	2.0	1.2	.31	.21	.03	.07
21		0	.01	6.3	3.2	19	2.0	1.1	.29	.17	.03	.05
22		0	.01	3.5	2.5	15	1.9	1.1	.27	.13	.02	.05
23		0	.02	2.4	2.0	10	1.8	.96	.30	.13	.04	.05
24		0	.03	1.7	120	8.6	1.8	.96	.28	.10	.13	.05
25		0	.01	1.4	20	8.1	1.7	.94	.33	.07	.17	.04
26		0	.01	1.2	11	7.3	1.7	.91	.40	.05	.21	.04
27		0	.03	.88	312	7.1	1.6	.84	.38	.07	.26	.04
28		0	.06	.78	110	6.8	1.6	.74	.41	.07	.26	.03
29		0	.06	.88	------	6.4	1.5	.80	.41	.07	.31	.03
30		0	.07	2.2	------	6.0	1.5	.83	.29	.07	.31	.04
31		------	.04	1.1	------	5.3	------	1.1	------	.05	.31	------
TOTAL	0	45.97	1.13	836.58	1,246.17	387.5	79.9	36.48	14.73	5.39	3.02	3.42
MEAN	0	1.53	.037	27.0	44.5	12.5	2.66	1.18	.49	.17	.097	.11
MAX	0	28	.26	585	312	70	4.9	1.5	1.1	.31	.31	.31
MIN	0	0	0	0	.65	5.2	1.5	.74	.27	.05	.02	.03
AC-FT	0	91	2.2	1,660	2,470	769	158	72	29	11	6.0	6.8

CAL YR 1972 TOTAL 57.58 MEAN .16 MAX 28 MIN 0 AC-FT 114
WTR YR 1973 TOTAL 2,660.29 MEAN 7.29 MAX 585 MIN 0 AC-FT 5,280

PEAK DISCHARGE (BASE, 150 CFS)

DATE	TIME	G.H.	DISCHARGE	DATE	TIME	G.H.	DISCHARGE
11-17	0100	4.66	205	2-11	0345	5.32	357
1-16	1430	7.62	1,370	2-12	2015	4.65	204
1-18	1330	9.97	3,530	2-24	0830	5.41	380
2-6	0930	4.77	225	2-27	1100	7.27	1,140
2-10	1200	4.99	275	2-28	0100	4.92	253

11121000 SANTA YNEZ RIVER AT JAMESON LAKE, NEAR MONTECITO, CALIF.

LOCATION.--Lat 34°29'32", long 119°30'25", in SW¼NE¼NW¼ sec.28, T.5 N., R.25 W., Santa Barbara County, on upstream face of Juncal Dam, 6.5 miles north of Carpinteria, and 8 miles northeast of Montecito.

DRAINAGE AREA.--13.9 sq mi (excludes Alder Creek).

PERIOD OF RECORD.--December 1930 to current year. Prior to October 1938, published as "at Juncal Reservoir, near Montecito."

GAGE.--Water-stage recorder on lake; water-stage recorder and sharp-crested weir on outlet conduit. Datum of gage is 2,021.6 ft above mean sea level (Bureau of Reclamation bench mark), or 2,000 ft above arbitrary datum (called sea level) generally used for works in this vicinity.

AVERAGE DISCHARGE.--42 years (1931-73), 6.54 cfs (4,740 acre-ft per year).

REMARKS.--Records of total inflow represent all water reaching Jameson Lake including precipitation on the lake. Total inflow computed on basis of records of storage, diversion (draft) to the city of Montecito, spill and release to river, and evaporation. Records of net inflow exclude precipitation on lake surface. Monthly evaporation from lake surface computed on basis of evaporation from Colorado land pan using coefficient of 0.80. Area table is based on survey made in 1961. Capacity table is based on survey made in 1969. Lake capacity at spillway level (gage height, 223.82 ft), 6,119 acre-ft. Dead storage, 18 acre-ft, below lowest outlet at gage height 139.0 ft included in these records. There is no regulation or diversion above station. At times flow of Alder Creek, which enters Santa Ynez River 2 miles downstream from Juncal Dam, is diverted at elevation 2,250 ft through a tunnel to Jameson Lake and is included in these records.

COOPERATION.--Reservoir-operation records and related data furnished by Montecito County Water District.

REVISIONS (WATER YEARS).--WRD Calif. 1972: 1969-71.

MONTHLY NET DISCHARGE, WATER YEAR OCTOBER 1972 TO SEPTEMBER 1973

Date	Gage height (feet)a	Contents (acre-feet)	Change in Contents (acre-feet)	Draft (acre-feet)	Spill and Release (acre-feet)	Evapo-ration (acre-feet)	Total inflow (acre-feet)	Rain on reser-voir (acre-feet)	Net inflow (acre-feet)
	Jameson Lake								
Sept. 30.....	201.91	3,509							
Oct. 31.....	200.30	3,354	-155	127	0	12	-16	3	-19
Nov. 30.....	201.48	3,468	+114	62	0	5	181	76	105
Dec. 31.....	201.55	3,475	+7	32	0	6	45	9	36
CAL YR 1972.....	--	--	-972	1,205	0	311	544	97	447
Jan. 31.....	210.37	4,406	+931	34	0	4	969	83	886
Feb. 28.....	224.34	6,190	+1,784	25	6,050	3	7,862	226	7,636
Mar. 31.....	224.12	6,160	-30	0	3,090	15	3,075	59	3,016
Apr. 30.....	224.42	6,202	+42	106	1,570	36	1,754	0	1,754
May 31.....	224.64	6,233	+31	122	147	46	346	0	346
June 30.....	223.41	6,062	-171	213	0	56	98	0	98
July 31.....	222.08	5,882	-180	136	0	67	23	0	23
Aug. 31.....	220.51	5,674	-208	133	0	57	-18	0	-18
Sept. 30.....	218.97	5,475	-199	131	0	40	-28	0	-28
WTR YR 1973.....	--	--	+1,966	1,121	10,857	347	14,291	456	13,835

a Gage height at 1800.

NOTE.--For months when inflow to the lake was small and other quantities were large, discordant figures of net inflow may appear. This arises primarily from the difficulty of computing net inflow as the residual of several larger quantities, which are not susceptible to measurement with a precision necessary to produce a final answer within desirable limits of accuracy.

11122000 SANTA YNEZ RIVER ABOVE GIBRALTAR DAM, NEAR SANTA BARBARA, CALIF.

LOCATION.--Lat 34°31'34", long 119°41'08", in SW¼NW¼SW¼ sec.11, T.5 N., R.27 W., Santa Barbara County, on upstream face of Gibraltar Dam, 7 miles north of Santa Barbara.

DRAINAGE AREA.--216 sq mi.

PERIOD OF RECORD.--April 1920 to current year. November 1903 to November 1918 (fragmentary) at river station at damsite; records not equivalent because records since April 1920 are based on operation of Gibraltar Reservoir, and since December 1930, Jameson Lake. Prior to October 1945, published as "near Santa Barbara."

GAGE.--Water-stage recorder on reservoir; water-stage recorder and sharp-crested weir on diversion. Spill and release measured at river gaging station below dam (see sta 11123000). Datum of gage is at mean sea level. See WSP 1735 for history of changes prior to Oct. 1, 1955.

REMARKS.--Records of total inflow represent all water reaching Gibraltar Reservoir, including precipitation on reservoir. Total inflow computed on basis of records of storage, diversion (draft) to city of Santa Barbara, spill and release to river, and evaporation. Records of net inflow exclude precipitation on reservoir surface. Monthly evaporation from reservoir surface computed on basis of evaporation from Colorado land pan using coefficient of 0.80. Area and capacity tables are based on survey made in August 1969. The lake was re-surveyed in October 1973. The new area-capacity tables were put into effect Jan. 19, 1973. Reservoir capacity at spillway level (elevation, 1,399.82 ft), 9,300 acre-ft. Flashboards were not used during current year. Silt level of reservoir at elevation 1,344 ft. Lowest outlet at elevation 1,333.86 ft. Flow regulated by Jameson Lake since December 1930 (see sta 11121000).

COOPERATION.--Reservoir-operation records and related data furnished by city of Santa Barbara.

MONTHLY NET INFLOW, WATER YEAR OCTOBER 1972 TO SEPTEMBER 1973

Date	Elevation (feet)a	Contents (acre-feet)	Change in contents (acre-feet)	Draft (acre-feet)	Spill and release (acre-feet)	Evaporation (acre-feet)	Total inflow (acre-feet)	Rain on reservoir (acre-feet)	Net inflow (acre-feet)
	Gibraltar Reservoir								
Sept. 30.....	1,374.37	3,843							
Oct. 31.....	1,369.75	3,052	-791	781	0	43	33	7	26
Nov. 30.....	1,372.98	3,600	+548	609	30	27	1,214	124	1,090
Dec. 31.....	1,370.55	3,185	-415	655	0	19	259	15	244
CAL YR 1972.....	--	--	-5,234	8,910	691	777	5,144	166	4,978
Jan. 31.....	1,400.10	9,380	+6,195	405	497	11	7,108	151	6,957
Feb. 28.....	1,400.21	9,410	+30	95	40,120	5	40,250	345	39,905
Mar. 31.....	1,400.03	9,360	-50	292	21,530	44	21,816	98	21,718
Apr. 30.....	1,400.17	9,400	+40	895	5,610	104	6,649	0	6,649
May 31.....	1,401.14	9,670	+270	710	1,170	128	2,278	0	2,278
June 30.....	1,399.32	9,170	-500	744	419	152	815	0	815
July 31.....	1,395.82	8,250	-920	728	334	159	301	0	301
Aug. 31.....	1,392.56	7,450	-800	736	66	152	154	0	154
Sept. 30.....	1,389.41	6,720	-730	698	0	43	11	0	11
WTR YR 1973.....	--	--	+2,877	7,348	69,776	887	80,888	740	80,148

a Elevation at 1800.

NOTE.--For months when inflow to the reservoir was small and other quantities were large, discordant figures of net inflow may appear. This arises primarily from the difficulty of computing net inflow as the residual of several larger quantities, which are not susceptible to measurement with a precision necessary to produce a final answer within desirable limits of accuracy.

11123000 SANTA YNEZ RIVER BELOW GIBRALTAR DAM, NEAR SANTA BARBARA, CALIF.

LOCATION.--Lat 34°31'28", long 119°41'11", in NW¼SW¼SW¼ sec.11, T.5 N., R.27 W., Santa Barbara County, on left bank 700 ft downstream from Gibraltar Dam, and 7 miles north of Santa Barbara.

DRAINAGE AREA.--216 sq mi.

PERIOD OF RECORD.--April 1920 to current year (monthly discharge only prior to October 1941).

GAGE.--Water-stage recorder; water-stage recorder and combination sharp-crested weir on "release to river" gage. Datum of gage is 1,227 ft above mean sea level. See WSP 1735 for history of changes prior to May 20, 1958.

EXTREMES.--Current year: Maximum discharge, 15,100 cfs Feb. 11 (gage height, 16.6 ft); no flow many days.
Period of record: Maximum discharge, 54,200 cfs Jan. 25, 1969 (gage height, 25.8 ft), from rating curve extended above 2,100 cfs on basis of computations of flow from gate openings and flow over dam at gage heights 17.5 and 25.8 ft; no flow at times in most years.

REMARKS.--Records fair. Flow regulated by Jameson Lake (see sta 11121000) and Gibraltar Reservoir (see sta 11122000). City of Santa Barbara diverted 7,348 acre-ft during current year from Gibraltar Reservoir; Montecito County Water District diverted 1,120 acre-ft during current year from Jameson Lake.

DISCHARGE, IN CUBIC FEET PER SECOND, WATER YEAR OCTOBER 1972 TO SEPTEMBER 1973

DAY	OCT	NOV	DEC	JAN	FEB	MAR	APR	MAY	JUN	JUL	AUG	SEP
1		0		0	30	854	194	.12	10	11	3.8	
2		0		0	23	407	144	.46	10	11	4.0	
3		0		0	45	425	146	3.2	12	9.8	3.9	
4		0		0	121	355	161	6.3	11	6.7	3.9	
5		0		0	108	303	149	11	9.6	6.7	3.9	
6		0		0	368	297	146	15	8.0	6.7	3.9	
7		0		0	882	353	146	208	5.9	6.7	3.9	
8		0		0	222	316	131	54	4.2	6.7	3.9	
9		0		0	174	327	110	.78	2.9	6.7	1.9	
10		0		0	1,400	265	106	.78	1.5	6.7	0	
11		.05		0	7,570	328	108	.78	1.2	5.7	0	
12		.31		0	1,810	334	103	.87	1.2	5.0	0	
13		.34		0	922	285	101	1.3	1.2	5.0	0	
14		1.0		0	760	232	99	1.9	1.2	5.0	0	
15		1.5		0	620	270	92	1.9	1.2	5.0	0	
16		7.8		.07	520	303	92	2.5	1.2	5.0	0	
17		3.5		.16	440	285	86	8.0	1.1	5.0	0	
18		.06		19	370	281	81	13	.98	4.7	0	
19		.02		2.0	330	222	79	23	.61	4.4	0	
20		0		.24	290	805	75	25	7.1	4.4	0	
21		0		.38	220	480	68	25	15	4.4	0	
22		.32		.84	160	480	66	25	12	4.4	0	
23		.34		.19	120	379	46	25	12	4.4	0	
24		0		1.4	99	365	45	24	12	4.4	0	
25		0		7.1	70	365	44	23	12	3.8	0	
26		0		42	56	350	43	21	12	3.2	0	
27		0		57	687	259	46	19	11	3.2	0	
28		0		39	1,810	249	51	15	11	3.2	0	
29		0		45	------	237	52	13	11	3.2	0	
30		0		20	------	233	20	11	11	3.2	0	
31		------		16	------	213	------	10	------	3.2	0	------
TOTAL	0	15.24	0	250.38	20,227	10,857	2,830	588.89	211.09	168.5	33.1	0
MEAN	0	.51	0	8.08	722	350	94.3	19.0	7.04	5.44	1.07	0
MAX	0	7.8	0	57	7,570	854	194	208	15	11	4.0	0
MIN	0	0	0	0	23	213	20	.12	.61	3.2	0	0
AC-FT	0	30	0	497	40,120	21,530	5,610	1,170	419	334	66	0

CAL YR 1972 TOTAL 348.63 MEAN .95 MAX 11 MIN 0 AC-FT 692
WTR YR 1973 TOTAL 35,181.20 MEAN 96.4 MAX 7,570 MIN 0 AC-FT 69,780

11123500 SANTA YNEZ RIVER BELOW LOS LAURELES CANYON, NEAR SANTA YNEZ, CALIF.

LOCATION.--Lat 34°32'37", long 119°51'50", in San Marcos Grant, Santa Barbara County, on left bank 0.3 mile downstream from Los Laureles Canyon Creek, and 13.3 miles east of Santa Ynez.

DRAINAGE AREA.--277 sq mi.

PERIOD OF RECORD.--April 1947 to current year. Monthly discharge only for some periods, published in WSP 1315-B.

GAGE.--Water-stage recorder. Datum of gage is 787.8 ft above mean sea level.

EXTREMES.--Current year: Maximum discharge, 31,800 cfs Feb. 11 (gage height, 12.76 ft); no flow for several months.

Period of record: Maximum discharge, 67,500 cfs Jan. 25, 1969 (gage height, 18.88 ft), from rating curve extended above 11,600 cfs on basis of maximum flow for station below Gibraltar Dam plus tributary inflow; no flow for several months in each year.

REMARKS.--Records good. Flow regulated by Jameson Lake and Gibraltar Reservoir (see sta 11121000, 11122000). Water diverted out of basin from these reservoirs to cities of Montecito and Santa Barbara for municipal supply. Low flow affected by intermittent pumping for irrigation from infiltration gallery in riverbed at station.

DISCHARGE, IN CUBIC FEET PER SECOND, WATER YEAR OCTOBER 1972 TO SEPTEMBER 1973

DAY	OCT	NOV	DEC	JAN	FEB	MAR	APR	MAY	JUN	JUL	AUG	SEP
1		0	.95	1.2	20	1,240	225	24	15	9.1	2.1	
2		0	.95	1.3	27	666	187	12	15	9.5	1.9	
3		0	1.1	1.3	26	594	151	9.7	15	9.6	1.3	
4		0	2.6	1.3	181	516	167	10	15	9.1	1.3	
5		0	4.2	1.3	120	446	161	14	14	6.2	1.2	
6		0	3.0	1.2	476	408	149	18	13	4.5	2.1	
7		0	3.0	1.3	1,840	471	163	97	12	5.1	.94	
8		0	3.0	1.5	476	472	149	281	7.4	4.7	0	
9		0	2.7	2.5	328	440	129	33	6.3	4.9	0	
10		0	2.3	2.7	1,990	355	109	20	6.7	3.9	0	
11		0	2.1	2.0	14,600	397	110	17	6.3	3.9	.30	
12		0	2.1	1.5	3,730	420	107	16	5.7	3.9	.88	
13		0	2.1	1.1	2,010	341	104	16	4.9	3.4	.87	
14		.24	1.9	.95	1,250	297	104	16	3.9	2.6	.20	
15		0	1.8	.65	907	256	102	16	3.6	4.8	0	
16		185	1.8	53	715	256	98	16	2.4	3.3	0	
17		212	1.6	112	599	249	97	16	1.4	2.9	0	
18		29	1.6	2,720	503	235	93	16	1.0	3.2	0	
19		7.8	1.6	450	426	205	91	17	.73	1.8	0	
20		4.0	1.6	151	394	1,020	89	23	.37	2.2	0	
21		2.3	1.6	77	301	525	85	24	.10	2.6	0	
22		2.0	1.5	48	321	506	81	24	8.6	5.7	0	
23		1.5	1.4	34	233	418	75	21	11	5.1	0	
24		1.2	1.3	37	301	361	56	21	12	2.4	0	
25		1.3	1.3	30	263	362	60	21	13	2.0	0	
26		1.3	1.3	21	217	346	54	18	12	1.1	0	
27		1.2	1.4	67	869	292	58	18	11	.42	0	
28		.96	1.4	56	3,450	255	80	17	9.0	1.8	0	
29		.83	1.3	42	------	256	83	15	8.7	3.1	0	
30		.95	1.1	52	------	247	80	15	9.3	2.7	0	
31		------	1.1	18	------	238	------	15	------	2.3	0	------
TOTAL	0	451.58	56.70	3,989.80	36,573	13,090	3,297	896.7	244.40	127.82	13.09	0
MEAN	0	15.1	1.83	129	1,306	422	110	28.9	8.15	4.12	.42	0
MAX	0	212	4.2	2,720	14,600	1,240	225	281	15	9.6	2.1	0
MIN	0	0	.95	.65	20	205	54	9.7	.10	.42	0	0
AC-FT	0	896	112	7,910	72,540	25,960	6,540	1,780	485	254	26	0

CAL YR 1972 TOTAL 1,128.22 MEAN 3.0 MAX 212 MIN 0 AC-FT 2,240
WTR YR 1973 TOTAL 58,740.09 MEAN 161 MAX 14,600 MIN 0 AC-FT 116,500

11124500 SANTA CRUZ CREEK NEAR SANTA YNEZ, CALIF.

LOCATION.--Lat 34°35'48", long 119°54'28", in San Marcos Grant, Santa Barbara County, on right bank 0.6 mile downstream from Pine Canyon, and 9.9 miles east of Santa Ynez.

DRAINAGE AREA.--74.0 sq mi.

PERIOD OF RECORD.--October 1941 to current year. Monthly discharge only for some periods, published in WSP 1315-B.

GAGE.--Water-stage recorder. Datum of gage is 783.38 ft above mean sea level. See WSP 1735 for history of changes prior to Sept. 27, 1952. Sept. 27, 1952, to June 24, 1969, at datum 3.25 ft higher.

AVERAGE DISCHARGE.--32 years, 17.1 cfs (12,390 acre-ft per year).

EXTREMES.--Current year: Maximum discharge, 2,160 cfs Jan. 18 (gage height, 11.29 ft); no flow many days. Period of record: Maximum discharge, 7,050 cfs Feb. 24, 1969 (gage height, 14.45 ft, from floodmark, present datum), from rating curve extended above 2,500 cfs on basis of slope-area measurement at gage height 14.16 ft; no flow at times since 1953.

REMARKS.--Records fair. No regulation or diversion above station.

DISCHARGE, IN CUBIC FEET PER SECOND, WATER YEAR OCTOBER 1972 TO SEPTEMBER 1973

DAY	OCT	NOV	DEC	JAN	FEB	MAR	APR	MAY	JUN	JUL	AUG	SEP
1		0	0	.39	1.3	195	50	19	3.0	1.4	.37	.02
2		0	0	.39	1.2	135	49	13	3.0	1.4	.37	0
3		0	0	.47	1.5	110	47	9.4	3.0	1.4	.20	0
4		0	.48	.47	8.9	95	46	9.4	2.0	.90	.37	0
5		0	1.2	.47	16	85	45	9.4	2.0	.58	.37	0
6		0	.50	.47	194	84	44	9.4	1.4	.58	.37	0
7		0	1.3	.56	516	85	43	9.4	.90	.58	.37	0
8		0	1.3	.56	184	108	41	6.6	3.0	.58	.37	0
9		0	.78	1.2	54	90	39	9.4	6.6	.90	.37	0
10		0	.59	3.0	336	80	37	13	6.6	.58	.37	0
11		0	.44	2.4	1,080	95	37	13	6.6	.58	.37	0
12		0	.34	2.0	310	84	35	13	9.4	.58	.37	0
13		0	.29	1.5	235	74	35	13	9.4	.58	.20	0
14		0	.26	1.5	190	72	35	13	9.4	.58	.20	0
15		0	.24	1.3	155	64	33	13	13	.58	.20	0
16		.16	.22	127	125	60	33	13	13	.58	.37	0
17		15	.17	246	97	57	31	9.4	9.4	.90	.37	0
18		2.6	.18	661	74	55	31	9.4	9.4	.58	.37	0
19		.26	.16	289	59	54	29	6.6	6.6	.58	.37	0
20		.01	.17	64	55	131	29	6.6	4.5	.58	.37	0
21		0	.18	28	46	130	27	6.6	3.0	.58	.20	0
22		0	.23	16	38	100	27	6.6	3.0	.58	.20	0
23		0	.28	10	31	84	25	6.6	4.5	.58	.20	0
24		0	.28	8.9	32	72	23	6.6	4.5	.58	.20	0
25		0	.28	5.0	31	64	23	4.5	4.5	.58	.10	0
26		0	.28	2.4	40	60	19	6.6	3.0	.37	.20	0
27		0	.33	2.2	185	58	19	4.5	2.0	.58	.20	0
28		0	.33	2.0	395	55	19	3.0	3.0	.37	.10	0
29		0	.33	1.7	------	53	19	3.0	1.4	.37	.05	0
30		0	.33	1.6	------	52	19	2.0	1.4	.37	.03	0
31		------	.39	1.5	------	51	------	3.0	------	.37	.05	------
TOTAL	0	18.03	11.86	1,482.98	4,490.9	2,592	989	271.0	152.50	20.35	8.25	.02
MEAN	0	.60	.38	47.8	160	83.6	33.0	8.74	5.08	.66	.27	.0007
MAX	0	15	1.3	661	1,080	195	50	19	13	1.4	.37	.02
MIN	0	0	0	.39	1.2	51	19	2.0	.90	.37	.03	0
AC-FT	0	36	24	2,940	8,910	5,140	1,960	538	302	40	16	.04

CAL YR 1972 TOTAL 630.46 MEAN 1.72 MAX 15 MIN 0 AC-FT 1,250
WTR YR 1973 TOTAL 10,036.89 MEAN 27.5 MAX 1,080 MIN 0 AC-FT 19,910

PEAK DISCHARGE (BASE, 100 CFS)

DATE	TIME	G.H.	DISCHARGE	DATE	TIME	G.H.	DISCHARGE
1-16	2100	10.14	960	2-27	2300	9.60	760
1-18	1715	11.29	2,160	3-8	0815	8.46	192
2-6	1945	9.81	730	3-20	0530	8.70	272
2-11	0615	11.24	2,090				

11125500 LAKE CACHUMA NEAR SANTA YNEZ, CALIF.

LOCATION.--Lat 34°34'57", long 119°58'47", in Lomas de la Purification Grant, Santa Barbara County, at Cachuma Dam on Santa Ynez River, on upstream face near left end of dam, 6.1 miles east of Santa Ynez.

DRAINAGE AREA.--417 sq mi.

PERIOD OF RECORD.--November 1952 to current year. Prior to October 1960, published as at Cachuma Reservoir near Santa Ynez.

GAGE.--Water-stage recorder. Datum of gage is at mean sea level (Bureau of Reclamation bench mark). Prior to Oct. 1, 1965, nonrecording gage.

EXTREMES.--Current year: Maximum contents, 206,600 acre-ft May 8, 9 (elevation, 750.55 ft); minimum, 116,900 acre-ft Jan. 7 (elevation, 716.19 ft).
Period of record: Maximum contents, 221,100 acre-ft Feb. 24, 1969 (elevation, 755.11 ft); minimum since initial filling in April 1958, 116,900 acre-ft Jan. 7, 1973 (elevation, 716.19 ft).

REMARKS.--Reservoir is formed by earthfill dam. Storage began November 1952. Capacity table is based on surveys made in January 1953. Dead storage below outlet gate to river (elevation, 600 ft), 3,114 acre-ft, included in contents. Capacity below sill of inlet to Tecolote tunnel (elevation, 660 ft), 32,514 acre-ft; below spillway level (elevation, 720 ft), 125,292 acre-ft; below top of 4 radial gates (elevation, 750 ft), 204,874 acre-ft. Water is released from outlet to Santa Ynez River to satisfy downstream water rights. Water diverted to Tecolote tunnel for use by city of Santa Barbara and nearby communities, to Santa Ynez River Water Conservation District, and to Cachuma recreation area.

COOPERATION.--Reservoir elevation and diversion figures furnished by Bureau of Reclamation.

MONTHEND ELEVATION AND CONTENTS, WATER YEAR OCTOBER 1972 TO SEPTEMBER 1973

Date	Elevation (feet)a	Contents (acre-feet)	Change in contents (acre-feet)	Total diversions (acre-feet)
Sept. 30	718.21	121,300	--	--
Oct. 31	716.92	118,500	-2,800	2,160
Nov. 30	716.68	118,000	-500	987
Dec. 31	716.27	117,100	-900	643
CAL YR 1972	--	--	-40,600	29,100
Jan. 31	719.91	125,100	+8,000	728
Feb. 28	747.61	197,600	+72,500	668
Mar. 31	750.23	205,600	+8,000	1,060
Apr. 30	750.52	206,500	+900	1,630
May 31	749.97	204,800	-1,700	2,350
June 30	748.32	199,700	-5,100	3,070
July 31	746.55	194,400	-5,300	3,280
Aug. 31	744.81	189,300	-5,100	3,280
Sept. 30	743.54	185,600	-3,700	2,290
WTR YR 1973	--	--	+64,300	22,100

a Elevation at 2400.

11126000 SANTA YNEZ RIVER NEAR SANTA YNEZ, CALIF.

LOCATION.--Lat 34°35'21", long 119°59'16", in Canada de los Pinos Grant, Santa Barbara County, on right bank 0.7 miles downstream from Cachuma Dam, and 5.5 miles southeast of Santa Ynez.

DRAINAGE AREA.--422 sq mi.

PERIOD OF RECORD.--December 1928 to September 1931, October 1932 to current year.

GAGE.--Water-stage recorder. Datum of gage is 545.66 ft above mean sea level (Bureau of Reclamation bench mark). Prior to Oct. 1, 1955, at site 2.5 miles downstream at different datum. Oct. 1, 1955, to Sept. 16, 1969, at site 0.4 mile downstream at datum 7.2 ft higher.

EXTREMES.--Current year: Maximum discharge, 3,340 cfs Mar. 7 (gage height, 6.88 ft); no flow many days. Period of record: Maximum discharge, 79,000 cfs Jan. 25, 1969 (gage height, 22.00 ft, from floodmark, present datum), on basis of computation of maximum flow over dam; no flow at times in some years.

REMARKS.--Records poor. Flow regulated by Jameson Lake since December 1930, Gibraltar Reservoir, and Lake Cachuma since November 1952 (see sta 11121000, 11122000, 11125500). Water diverted out of basin from Jameson Lake, Gibraltar Reservoir, and Lake Cachuma to cities of Montecito, Santa Barbara, and to the Santa Ynez Valley for municipal supply. Some water pumped from wells along river banks for irrigation.

DISCHARGE, IN CUBIC FEET PER SECOND, WATER YEAR OCTOBER 1972 TO SEPTEMBER 1973

DAY	OCT	NOV	DEC	JAN	FEB	MAR	APR	MAY	JUN	JUL	AUG	SEP
1	1.1	0	0	10	44	23	265	35	31	23	8.6	.40
2	1.0	0	0	2.4	52	21	245	28	29	23	8.6	.35
3	.50	0	0	.44	58	21	218	15	30	20	8.6	.30
4	.20	0	3.0	.03	30	22	185	5.0	26	20	8.6	.25
5	.04	0	4.1	0	1.3	21	138	5.0	26	20	8.6	.22
6	0	0	4.1	0	38	102	174	5.0	28	19	6.5	.19
7	0	0	4.1	0	30	1,230	205	5.0	27	19	4.3	.17
8	0	0	4.1	0	13	1,160	185	5.0	30	18	4.3	.16
9	0	0	4.1	0	12	116	185	5.0	29	15	4.3	.14
10	0	0	4.1	0	66	252	163	5.0	30	8.7	4.3	.13
11	0	0	2.1	0	117	212	140	5.0	30	9.1	4.3	.12
12	0	0	2.0	0	19	281	140	5.0	30	9.0	4.3	.11
13	0	0	.69	0	9.2	321	140	5.0	30	8.6	2.6	.10
14	0	2.0	.16	0	7.7	336	102	3.6	31	7.7	.50	.09
15	0	0	0	0	10	332	72	3.6	32	7.9	.17	.08
16	0	.60	0	.23	13	252	87	3.6	29	9.2	.14	.07
17	0	1.0	0	.63	14	225	90	11	28	5.1	.11	.06
18	0	0	0	54	13	230	72	27	21	2.7	.10	.05
19	0	0	0	.82	14	303	34	28	8.0	2.5	.10	.04
20	0	20	0	.36	14	1,260	30	22	9.1	2.4	3.0	.03
21	0	39	0	.20	14	658	30	22	9.4	2.3	4.2	.02
22	0	39	0	.08	12	603	30	20	9.6	2.3	4.2	.01
23	0	39	0	.58	10	529	30	18	7.1	1.2	4.2	0
24	0	39	0	3.0	17	364	30	20	6.9	.52	4.2	0
25	0	39	0	34	13	340	30	20	12	.20	4.2	0
26	0	39	0	57	13	345	39	21	23	.15	4.2	0
27	0	20	.08	38	51	345	45	25	21	.13	2.6	0
28	0	0	2.4	34	35	292	45	29	19	.11	1.0	0
29	0	0	6.7	48	------	265	45	31	20	.10	.80	0
30	0	0	9.2	41	------	292	44	29	22	.10	.60	0
31	0	------	10	41	------	305	------	31	------	5.9	.50	------
TOTAL	2.84	277.60	60.93	365.77	740.2	11,058	3,238	492.8	684.1	262.91	112.72	3.09
MEAN	.092	9.25	1.97	11.8	26.4	357	108	15.9	22.8	8.48	3.64	.10
MAX	1.1	39	10	57	117	1,260	265	35	32	23	8.6	.40
MIN	0	0	0	0	1.3	21	30	3.6	6.9	.10	.10	0
AC-FT	5.6	551	121	726	1,470	21,930	6,420	977	1,360	521	224	6.1

CAL YR 1972 TOTAL 3,295.52 MEAN 9.00 MAX 141 MIN 0 AC-FT 6,540
WTR YR 1973 TOTAL 17,298.96 MEAN 47.4 MAX 1,260 MIN 0 AC-FT 34,310

NOTE.--No gage-height record Oct. 1 to Dec. 12, Mar. 9 to May 14.

11128250 ALAMO PINTADO CREEK NEAR SOLVANG, CALIF.

LOCATION.--Lat 34°37'06", long 120°07'11", in SE¼NW¼NW¼ sec.11, T.6 N., R.31 W., Santa Barbara County, on right bank at downstream side of bridge on Alamo Pintado Road, 1.5 miles northeast of Solvang.

DRAINAGE AREA.--29.4 sq mi.

PERIOD OF RECORD.--October 1970 to current year.

GAGE.--Water-stage recorder. Datum of gage is 540.49 ft above mean sea level (Santa Barbara County bench mark).

EXTREMES.--Current year: Maximum discharge, 466 cfs Jan. 18 (gage height, 6.00 ft, from floodmark), from rating curve extended as explained below; no flow most of year.
Period of record: Maximum discharge, 466 cfs Jan. 18, 1973 (gage height, 6.00 ft, from floodmark), from rating curve extended above 3.2 cfs on basis of slope-area measurement of peak flow; no flow most of each year.
Flood of Jan. 25, 1969, reached a stage of 10.32 ft.

REMARKS.--Records fair. No regulation above station. Pumping from wells along stream for irrigation.

DISCHARGE, IN CUBIC FEET PER SECOND, WATER YEAR OCTOBER 1972 TO SEPTEMBER 1973

DAY	OCT	NOV	DEC	JAN	FEB	MAR	APR	MAY	JUN	JUL	AUG	SEP
1	0	0		0	0	1.2						
2	0	0		0	0	.63						
3	0	0		0	0	.30						
4	0	0		0	0	.14						
5	0	0		0	0	.06						
6	0	0		0	3.2	.03						
7	0	0		0	.40	.01						
8	0	0		0	0	.01						
9	0	0		0	0	0						
10	0	0		0	0	0						
11	0	0		0	32	0						
12	0	0		0	.78	0						
13	0	0		0	.07	0						
14	0	.10		0	.01	0						
15	0	.04		0	0	0						
16	0	.12		.01	0	0						
17	0	.05		0	0	0						
18	.04	0		40	0	0						
19	0	0		2.5	0	0						
20	0	0		0	0	2.6						
21	0	0		0	0	.63						
22	0	0		0	0	.36						
23	0	0		0	0	0						
24	0	0		0	0	0						
25	0	0		0	0	0						
26	0	0		0	0	0						
27	0	0		0	0	0						
28	0	0		0	1.9	0						
29	0	0		0	------	0						
30	0	0		0	------	0						
31	0	------		0	------	0	------		------			------
TOTAL	.04	.31	0	42.51	38.36	5.97	0	0	0	0	0	0
MEAN	.001	.010	0	1.37	1.37	.19	0	0	0	0	0	0
MAX	.04	.12	0	40	32	2.6	0	0	0	0	0	0
MIN	0	0	0	0	0	0	0	0	0	0	0	0
AC-FT	.08	.6	0	84	76	12	0	0	0	0	0	0

CAL YR 1972 TOTAL 0.44 MEAN .001 MAX .12 MIN 0 AC-FT 0
WTR YR 1973 TOTAL 87.19 MEAN .24 MAX 40 MIN 0 AC-FT 173

PEAK DISCHARGE (BASE, 10 CFS).--Jan. 18 (1645) 466 cfs (6.00 ft); Feb. 11 (0615) 310 cfs (5.60 ft).

11128300 ALISAL RESERVOIR NEAR SOLVANG, CALIF.

LOCATION.--Lat 34°32'56", long 120°07'45", in NW¼NW¼NE¼ sec.4, T.5 N., R.31 W., Santa Barbara County, in cove, on right bank 0.4 mile upstream from reservoir spillway, 2.2 miles south of Alisal Creek, and 3 miles south of Solvang.

DRAINAGE AREA.--7.83 sq mi.

PERIOD OF RECORD.--December 1971 to current year.

GAGE.--Water-stage recorder. Datum of gage is at mean sea level.

EXTREMES.--Current year: Maximum contents, 2,650 acre-ft Feb. 27 (elevation, 602.95 ft); minimum, 748 acre-ft Nov. 8-10 (elevation, 577.15 ft).
Period of record: Maximum contents, 2,650 acre-ft Feb. 27, 1973 (elevation, 602.95 ft); minimum, 748 acre-ft Nov. 8-10, 1972 (elevation, 577.15 ft).

REMARKS.--Lake is formed by earthfill dam. Storage began Dec. 19, 1970. Usable capacity, 2,260 acre-ft between elevations 555.70 (bottom of outlet gate) and 599.88 ft (crest of spillway). Dead storage, 110 acre-ft. Inflow must total 150 acre-ft during any one month between November and June to store flow for year.

MONTHEND ELEVATION AND CONTENTS, WATER YEAR OCTOBER 1972 TO SEPTEMBER 1973

Date	Elevation (feet)a	Contents (acre-feet)	Change in contents (acre-feet)
Sept. 30.....	577.32	756	--
Oct. 31.....	577.20	750	-6
Nov. 30.....	580.88	934	+184
Dec. 31.....	581.15	949	+15
CAL YR 1972	--	--	+109
Jan. 31.....	599.16	2,300	+1,351
Feb. 28.....	601.15	2,480	+180
Mar. 31.....	600.36	2,410	-70
Apr. 30.....	600.25	2,400	-10
May 31.....	600.20	2,400	0
June 30.....	600.03	2,380	-20
July 31.....	599.60	2,340	-40
Aug. 31.....	599.12	2,300	-40
Sept. 30.....	598.75	2,270	-30
WTR YR 1973	--	--	+1,514

a Elevation at 1800.

11128500 SANTA YNEZ RIVER AT SOLVANG, CALIF.

LOCATION.--Lat 34°35'06", long 120°08'37", in San Carlos de Jonata Grant, Santa Barbara County, on downstream side of right abutment of Mission bridge, 25 ft downstream from Alisal Creek, and 0.8 mile southwest of Solvang.

DRAINAGE AREA.--579 sq mi.

PERIOD OF RECORD.--October 1928 to November 1936, June 1937 to November 1940 (irrigation seasons only), October 1946 to current year.

GAGE.--Water-stage recorder. Datum of gage is 362.43 ft above mean sea level. Various datums used during period of record. July 29 to Sept. 30, 1953, auxiliary water-stage recorder 750 ft upstream at different datum. Oct. 1, 1953, to Sept. 30, 1968, water-stage recorder at datum 2.00 ft higher.

EXTREMES.--Current year: Maximum discharge, 2,470 cfs Feb. 11 (gage height, 7.38 ft); no flow for several months. Period of record (1928-36, 1946 to current year): Maximum discharge, 82,000 cfs (estimated) Jan. 25, 1969 (gage height, 17.1 ft, from floodmark); no flow for several months in many years.

REMARKS.--Records poor. Flow regulated by Jameson Lake, Gibraltar Reservoir, and since November 1952 by Lake Cachuma (see sta 11121000, 11122000, 11125500). Water diverted out of basin from Jameson Lake, Gibraltar Reservoir, and Lake Cachuma to cities of Montecito, Santa Barbara, and Goleta for municipal supply. Some water for irrigation pumped from wells along banks of river in valley upstream.

DISCHARGE, IN CUBIC FEET PER SECOND, WATER YEAR OCTOBER 1972 TO SEPTEMBER 1973

DAY	OCT	NOV	DEC	JAN	FEB	MAR	APR	MAY	JUN	JUL	AUG	SEP
1		0	0	0	22	340	271	58	42	6.5	.74	
2		0	0	0	27	230	241	58	42	7.2	.53	
3		0	0	0	37	170	229	55	42	6.5	.15	
4		0	0	0	50	130	210	43	42	5.2	.03	
5		0	.02	0	18	100	160	36	38	4.4	.06	
6		0	0	0	190	80	153	32	34	3.4	.06	
7		0	0	0	369	616	206	33	33	3.4	.01	
8		0	0	0	140	1,150	188	32	33	3.4	0	
9		0	0	0	88	515	186	32	33	2.9	0	
10		0	0	0	362	710	178	31	33	2.6	0	
11		0	0	0	1,040	630	147	31	35	2.3	.93	
12		0	0	0	280	639	147	32	35	2.1	1.8	
13		0	0	0	222	612	142	34	31	1.9	.66	
14		.01	0	0	107	534	124	34	30	1.7	.06	
15		.01	0	0	75	463	47	35	30	1.6	.01	
16		.21	0	0	49	355	50	37	22	1.5	0	
17		1.2	0	5.0	37	300	60	34	19	1.4	0	
18		0	0	777	31	281	61	33	17	1.4	0	
19		0	0	150	26	310	58	60	12	1.3	0	
20		0	0	27	22	976	54	45	7.6	1.3	0	
21		0	0	9.9	19	623	51	46	4.6	1.2	0	
22		0	0	5.4	18	552	49	47	3.6	1.2	0	
23		0	0	4.1	17	475	47	39	3.0	1.1	0	
24		0	0	3.6	55	381	45	34	2.7	1.1	0	
25		0	0	4.3	31	341	44	36	2.5	1.1	0	
26		0	0	49	20	351	44	36	2.0	1.1	0	
27		0	0	54	370	347	50	35	2.7	1.2	0	
28		0	0	34	618	308	52	45	3.9	1.5	0	
29		0	0	30	------	256	55	45	4.6	1.7	0	
30		0	0	24	------	271	58	43	5.2	1.5	0	
31		------	0	22	------	294	------	43	------	1.3	0	------
TOTAL	0	1.43	.02	1,199.3	4,340	13,340	3,407	1,234	645.4	76.0	5.04	0
MEAN	0	.048	.0006	38.7	155	430	114	39.8	21.5	2.45	.16	0
MAX	0	1.2	.02	777	1,040	1,150	271	60	42	7.2	1.8	0
MIN	0	0	0	0	17	80	44	31	2.0	1.1	0	0
AC-FT	0	2.8	.04	2,380	8,610	26,460	6,760	2,450	1,280	151	10.0	0

CAL YR 1972 TOTAL 1,951.63 MEAN 5.33 MAX 146 MIN 0 AC-FT 3,870
WTR YR 1973 TOTAL 24,248.19 MEAN 66.4 MAX 1,150 MIN 0 AC-FT 48,100

11129800 ZACA CREEK NEAR BUELLTON, CALIF.

LOCATION.--Lat 34°38'55", long 120°11'00", in San Carlos de Jonata Grant, Santa Barbara County, on upstream end of left pier of bridge on frontage road, 0.9 mile upstream from Dry Creek, 2.4 miles north of Buellton, and 4.0 miles upstream from mouth.

DRAINAGE AREA.--32.8 sq mi.

PERIOD OF RECORD.--September 1963 to current year.

GAGE.--Water-stage recorder. Datum of gage is 471.54 ft above mean sea level.

AVERAGE DISCHARGE.--10 years, 1.12 cfs (811 acre-ft per year).

EXTREMES.--Current year: Maximum discharge, 205 cfs Jan. 18 (gage height, 4.39 ft); no flow most of year. Period of record: Maximum discharge, 1,390 cfs Feb. 24, 1969 (gage height, 9.20 ft); no flow most of each year.

REMARKS.--Records poor. Slight regulation by Zaca Lake. Some pumping from wells along stream for irrigation above station.

DISCHARGE, IN CUBIC FEET PER SECOND, WATER YEAR OCTOBER 1972 TO SEPTEMBER 1973

DAY	OCT	NOV	DEC	JAN	FEB	MAR	APR	MAY	JUN	JUL	AUG	SEP
1		0		0	0	5.0	.80					
2		0		0	0	3.0	.75					
3		0		0	3.5	1.7	.70					
4		0		0	.68	1.2	.70					
5		0		0	0	.90	.65					
6		0		0	0	.60	.60					
7		0		0	0	.45	.50					
8		0		0	0	.35	.45					
9		0		0	0	.25	.40					
10		0		0	0	.20	.32					
11		0		0	101	.15	.25					
12		0		0	28	.13	.20					
13		0		0	33	.11	.13					
14		0		0	10	.09	.09					
15		.03		0	3.0	.07	.06					
16		.01		0	1.0	.06	.05					
17		0		0	.50	.06	.04					
18		0		33	.20	.05	.03					
19		0		4.8	.15	.05	.03					
20		0		.30	.13	10	.02					
21		0		.15	.12	8.0	.02					
22		0		0	.11	6.0	.02					
23		0		0	.10	3.5	.02					
24		0		0	12	2.5	.02					
25		0		0	5.0	1.9	.01					
26		0		0	2.0	1.6	.01					
27		0		0	1.0	1.4	.01					
28		0		0	8.0	1.2	.01					
29		0		0	------	1.1	.01					
30		0		0	------	1.0	.01					
31		------		0	------	.90	------		------			------
TOTAL	0	.04	0	38.25	209.49	53.52	6.91	0	0	0	0	0
MEAN	0	.001	0	1.23	7.48	1.73	.23	0	0	0	0	0
MAX	0	.03	0	33	101	10	.80	0	0	0	0	0
MIN	0	0	0	0	0	.05	.01	0	0	0	0	0
AC-FT	0	.08	0	76	416	106	14	0	0	0	0	0

CAL YR 1972 TOTAL 0.04 MEAN .000 MAX .03 MIN 0 AC-FT 0
WTR YR 1973 TOTAL 308.21 MEAN .84 MAX 101 MIN 0 AC-FT 611

PEAK DISCHARGE (BASE, 10 CFS)

DATE	TIME	G.H.	DISCHARGE	DATE	TIME	G.H.	DISCHARGE
1-18	1245	4.39	205	2-12	1845	3.66	114
2-11	0945	4.36	200	2-24	0515	3.27	66

NOTE.--No gage-height record Feb. 14 to May 1.

11130500 SANTA YNEZ RIVER NEAR BUELLTON, CALIF.

LOCATION.--Lat 34°36'38", long 120°14'53", in Santa Rosa Grant, Santa Barbara County, on left bank 0.5 mile downstream from Canada de los Palos Blancos, and 3 miles west of Buellton.

DRAINAGE AREA.--668 sq mi.

PERIOD OF RECORD.--June 1948 to September 1952 (irrigation seasons only); October 1952 to September 1965; October 1965 to current year (wading stages only).

GAGE.--Water-stage recorder. Datum of gage is 260.68 ft above mean sea level (Bureau of Reclamation bench mark). See WSP 1928 for history of changes prior to Mar. 29, 1962. Mar. 29, 1962, to Oct. 1, 1969, at site 100 ft upstream at datum 1 ft lower.

REMARKS.--Records good except those for discharges above 400 cfs, which are poor. This is a project station. Discharge above wading stages is estimated. Flow regulated by Jameson Lake, Gibraltar Reservoir, and since November 1952 by Lake Cachuma (see sta 11121000, 11122000, 11125500). Water diverted out of basin from Jameson Lake, Gibraltar Reservoir, and Lake Cachuma to cities of Montecito, Santa Barbara, and Goleta for municipal supply. Water pumped from wells along banks of river for irrigation in valley upstream.

DISCHARGE, IN CUBIC FEET PER SECOND, WATER YEAR OCTOBER 1972 TO SEPTEMBER 1973

DAY	OCT	NOV	DEC	JAN	FEB	MAR	APR	MAY	JUN	JUL	AUG	SEP
1			0	1.9	32	310	352	41	26	3.5	.35	
2			0	2.0	33	220	333	40	24	3.4	.24	
3			0	2.1	43	170	319	39	24	3.3	.14	
4			.61	2.3	81	145	308	38	24	3.2	.05	
5			.49	2.4	58	120	296	37	24	3.2	0	
6			.78	2.7	224	107	280	36	22	2.9	.05	
7			.98	2.9	608	430	260	36	20	2.6	0	
8			1.1	3.6	210	1,160	250	35	17	2.1	0	
9			1.0	3.9	110	457	235	34	18	2.0	0	
10			1.1	4.1	431	494	220	34	18	1.9	0	
11			1.1	4.3	1,870	478	210	33	18	1.7	0	
12			1.2	4.7	560	488	200	32	18	1.4	0	
13			1.3	5.0	456	495	190	32	16	1.2	0	
14			1.4	5.4	272	479	180	31	16	1.0	0	
15			1.4	5.6	218	458	110	31	15	.93	0	
16			1.5	7.3	170	430	107	30	14	.84	0	
17			1.5	12	137	379	104	30	11	.78	0	
18			1.6	697	118	361	100	30	11	.73	0	
19			1.6	480	108	343	84	29	9.8	.69	0	
20			1.7	95	100	1,360	70	29	8.6	.65	0	
21			1.7	55	94	996	66	29	7.2	.62	0	
22			1.7	46	86	776	62	28	6.2	.59	0	
23			1.7	36	81	602	57	28	5.1	.57	0	
24			1.7	30	76	470	53	28	4.5	.55	0	
25			1.7	25	71	404	50	28	4.3	.54	0	
26			1.8	34	68	404	48	27	3.8	.52	0	
27			1.8	45	190	400	46	27	3.7	.46	0	
28			1.9	41	500	400	45	27	3.7	.48	0	
29			1.8	38	------	368	44	27	3.6	.53	0	
30			1.9	36	------	344	42	27	3.5	.50	0	
31		------	1.8	33	------	352	------	27	------	.51	0	------
TOTAL	0	0	39.86	1,763.2	7,005	14,400	4,721	980	400.0	43.89	.83	0
MEAN	0	0	1.29	56.9	250	465	157	31.6	13.3	1.42	.027	0
MAX	0	0	1.9	697	1,870	1,360	352	41	26	3.5	.35	0
MIN	0	0	0	1.9	32	107	42	27	3.5	.46	0	0
AC-FT	0	0	79	3,500	13,890	28,560	9,360	1,940	793	87	1.6	0

CAL YR 1972 TOTAL 1,869.62 MEAN 5.11 MAX 74 MIN 0 AC-FT 3,710
WTR YR 1973 TOTAL 29,353.78 MEAN 80.4 MAX 1,870 MIN 0 AC-FT 58,220

11131500 SANTA YNEZ RIVER AT COOPER'S REEF, NEAR LOMPOC, CALIF.

LOCATION.--Lat 34°36'48", long 120°21'23", near boundary of Canada de Salsipuedes Grant, Santa Barbara County, on right bank 0.6 mile upstream from Canada de la Vina, and 6 miles east of Lompoc.

DRAINAGE AREA.--708 sq mi.

PERIOD OF RECORD.--October 1954 to current year.

GAGE.--Water-stage recorder. Altitude of gage is 160 ft (from topographic map). Prior to Sept. 18, 1969, at site 100 ft downstream at datum about 0.6 ft higher (reference marks destroyed by floods of 1969).

EXTREMES.--Current year: Maximum discharge, 4,420 cfs Jan. 18 (gage height, 9.12 ft), from rating curve extended above 470 cfs; no flow for several months.
Period of record: Maximum discharge, 81,000 cfs (estimated) Jan. 25, 1969 (gage height, 22.5 ft, site and datum then in use, from floodmark); no flow for several months in some years.

REMARKS.--Records poor. Flow regulated by Jameson Lake, Gibraltar Reservoir, and Lake Cachuma (see sta 11121000, 11122000, 11125500). Water diverted out of basin from Jameson Lake, Gibraltar Reservoir, and Lake Cachuma to cities of Montecito, Santa Barbara, and Goleta for municipal supply. Water pumped from wells along banks of river for irrigation in valley upstream.

DISCHARGE, IN CUBIC FEET PER SECOND, WATER YEAR OCTOBER 1972 TO SEPTEMBER 1973

DAY	OCT	NOV	DEC	JAN	FEB	MAR	APR	MAY	JUN	JUL	AUG	SEP
1				0	26	271	360	41	24	.60	.08	.03
2				0	29	158	299	38	26	.52	.08	.03
3				0	37	123	290	36	25	.45	.08	.03
4				0	74	112	258	32	24	.38	.07	.03
5				0	83	103	213	29	24	.33	.07	.03
6				0	151	98	174	24	22	.30	.07	.03
7				0	753	273	229	19	20	.28	.07	.03
8				.03	388	1,080	221	16	19	.25	.06	.03
9				.06	205	326	209	14	18	.23	.06	.03
10				.04	476	375	201	13	19	.21	.06	.03
11				.03	2,450	407	167	12	19	.20	.06	.03
12				.03	611	429	149	11	22	.19	.06	.03
13				.03	455	452	143	10	21	.18	.06	.03
14				.03	183	396	140	9.0	19	.17	.06	.03
15				.03	123	370	105	8.7	19	.16	.05	.03
16				.08	85	330	85	8.3	17	.15	.05	.02
17				.09	65	268	94	8.0	15	.14	.05	.02
18				803	56	276	98	8.0	13	.14	.05	.02
19				860	49	308	85	8.0	11	.13	.05	.02
20				164	45	1,280	59	8.0	9.4	.12	.05	.02
21				74	40	1,040	50	17	8.0	.12	.05	.02
22				39	37	784	48	19	6.9	.11	.05	.02
23				24	34	648	48	19	5.4	.11	.04	.02
24				16	87	556	45	17	4.3	.11	.04	.02
25				13	83	464	44	14	3.2	.10	.04	.02
26				9.0	52	494	43	12	2.2	.10	.04	.02
27				29	517	488	41	10	1.5	.10	.04	.02
28				40	926	470	45	9.9	1.2	.09	.04	.02
29				33	------	375	45	12	.90	.09	.04	.02
30				33	------	360	45	17	.84	.09	.04	.02
31		------		28	------	385	------	20	------	.08	.04	------
TOTAL	0	0	0	2,165.45	8,120	13,499	4,033	519.9	420.84	6.23	1.70	.75
MEAN	0	0	0	69.9	290	435	134	16.8	14.0	.20	.055	.025
MAX	0	0	0	860	2,450	1,280	360	41	26	.60	.08	.03
MIN	0	0	0	0	26	98	41	8.0	.84	.08	.04	.02
AC-FT	0	0	0	4,300	16,110	26,780	8,000	1,030	835	12	3.4	1.5

CAL YR 1972 TOTAL 1,763.39 MEAN 4.82 MAX 84 MIN 0 AC-FT 3,500
WTR YR 1973 TOTAL 28,766.87 MEAN 78.8 MAX 2,450 MIN 0 AC-FT 57,060

NOTE.--No gage-height record July 11 to Sept. 30.

11132500 SALSIPUEDES CREEK NEAR LOMPOC, CALIF.

LOCATION.--Lat 34°35'19", long 120°24'27", in W½ sec.24, T.6 N., R.34 W., Santa Barbara County, on right bank at bridge on Jalama Road, 0.4 mile downstream from El Jaro Creek, and 4.4 miles southeast of Lompoc.

DRAINAGE AREA.--47.1 sq mi.

PERIOD OF RECORD.--January 1941 to current year.

GAGE.--Water-stage recorder and concrete low-water control. Altitude of gage is 220 ft (from topographic map).

AVERAGE DISCHARGE.--32 years, 8.50 cfs (6,160 acre-ft per year).

EXTREMES.--Current year: Maximum discharge, 8,280 cfs Jan. 18 (gage height, 16.0 ft); no flow Oct. 3-25.
Period of record: Maximum discharge, 11,400 cfs Mar. 15, 1952 (gage height, 20.8 ft); no flow at times in some years.

REMARKS.--Records fair except those for periods of no gage-height record, which are poor. No regulation above station. Small diversions for irrigation above station.

DISCHARGE, IN CUBIC FEET PER SECOND, WATER YEAR OCTOBER 1972 TO SEPTEMBER 1973

DAY	OCT	NOV	DEC	JAN	FEB	MAR	APR	MAY	JUN	JUL	AUG	SEP
1	.01	.06	.06	.18	12	94	22	7.0	5.3	1.8	.77	.91
2	.01	.06	.06	.22	10	79	21	7.0	4.9	1.7	.76	.97
3	0	.06	.05	.21	14	48	20	6.0	4.9	1.7	.74	.98
4	0	.06	.14	.16	15	48	19	6.0	4.9	1.7	.81	1.1
5	0	.06	.27	.16	12	38	19	6.0	4.3	1.7	1.2	1.3
6	0	.06	.23	.16	30	50	18	5.8	3.7	1.6	1.7	1.1
7	0	.06	.26	.16	28	41	18	5.5	3.5	1.6	1.6	.89
8	0	.06	.11	.33	25	91	17	5.2	3.0	1.6	1.5	.77
9	0	.06	.06	1.6	17	42	17	5.1	2.7	1.6	1.3	.73
10	0	.06	.04	1.4	424	33	16	5.1	2.7	1.6	1.2	.80
11	0	.06	.05	.33	735	54	16	5.0	2.7	1.5	1.1	.95
12	0	.06	.05	.16	191	34	15	5.0	2.7	1.5	.84	.83
13	0	.06	.06	.16	105	28	15	4.9	2.4	1.5	.81	.95
14	0	12	.06	.16	57	26	14	4.9	2.4	1.5	.86	1.1
15	0	.20	.06	.12	42	23	14	4.8	2.4	1.5	.85	1.1
16	0	20	.06	290	32	22	13	4.8	2.4	1.4	.93	1.2
17	0	50	.06	28	27	21	13	4.7	2.1	1.4	.91	1.1
18	0	5.0	.11	1,520	24	20	12	4.7	2.1	1.4	.86	1.1
19	0	.15	.11	106	22	27	12	4.6	1.8	1.4	.78	1.1
20	0	.13	.09	32	20	212	11	4.6	2.1	1.4	.73	1.1
21	0	.12	.09	20	18	130	11	4.6	1.6	1.3	.71	1.0
22	0	.10	.13	14	16	68	10	4.5	1.5	1.3	.69	.90
23	0	.09	.12	11	14	50	10	4.9	1.7	1.3	.70	.83
24	0	.09	.14	10	231	42	9.0	5.3	1.7	1.3	.71	.80
25	0	.08	.13	9.2	40	40	9.0	5.8	1.6	1.2	.78	.75
26	.01	.07	.16	8.8	28	35	9.0	5.8	1.6	1.2	.81	.75
27	.02	.07	.17	8.2	974	30	8.0	5.8	1.7	1.2	.85	.72
28	.03	.07	.21	7.6	255	28	8.0	4.9	1.7	1.1	.82	.64
29	.04	.06	.21	7.8	------	26	7.0	4.1	1.7	1.1	.79	.87
30	.05	.06	.20	9.7	------	24	7.0	4.5	2.0	1.0	.81	.93
31	.06	------	.22	15	------	23	------	4.9	------	.78	.87	------
TOTAL	.23	89.07	3.77	2,102.81	3,418	1,527	410.0	161.8	79.8	43.88	28.79	28.27
MEAN	.007	2.97	.12	67.8	122	49.3	13.7	5.22	2.66	1.42	.93	.94
MAX	.06	50	.27	1,520	974	212	22	7.0	5.3	1.8	1.7	1.3
MIN	0	.06	.04	.12	10	20	7.0	4.1	1.5	.78	.69	.64
AC-FT	.5	177	7.5	4,170	6,780	3,030	813	321	158	87	57	56

CAL YR 1972 TOTAL 176.79 MEAN .48 MAX 50 MIN 0 AC-FT 351
WTR YR 1973 TOTAL 7,893.42 MEAN 21.6 MAX 1,520 MIN 0 AC-FT 15,660

PEAK DISCHARGE (BASE, 100 CFS)

DATE	TIME	G.H.	DISCHARGE	DATE	TIME	G.H.	DISCHARGE
11-17	unknown	--	unknown	2-24	0830	5.19	1,150
1-16	1530	6.82	2,170	2-27	1145	7.77	2,650
1-18	1300	16.0	8,280	3-6	1845	2.36	130
2-10	1215	5.69	1,470	3-8	0745	2.56	171
2-11	0345	7.00	2,260	3-20	0145	4.56	800
2-12	2045	4.56	800	3-21	1515	4.30	680

NOTE.--No gage-height record Oct. 24 to Nov. 30, Jan. 31 to Feb. 8, Apr. 4 to June 5, July 1-30.

11133000 SANTA YNEZ RIVER AT NARROWS, NEAR LOMPOC, CALIF.

LOCATION.--Lat 34°38'16", long 120°25'32", in Canada de Salsipuedes Grant, Santa Barbara County, on left bank 0.5 mile upstream from State Highway 246 (corrected), 1.9 miles east of Lompoc, and 1.9 miles downstream from Salsipuedes Creek.

DRAINAGE AREA.--789 sq mi.

PERIOD OF RECORD--May 1947 to November 1951 (irrigation seasons only). May 1952 to September 1963, October 1964 to current year. Records equivalent, excepting low-flow periods, to those published as "near Lompoc" (sta 11133500), November to December 1906, October 1907 to September 1918, May 1925 to September 1960.

GAGE.--Water-stage recorder. Altitude of gage is 90 ft (from topographic map). See WSP 1715 for history of changes prior to Oct. 1, 1961. Since Oct. 1, 1961, at various sites and datums within 0.1 mile of present site and supplementary water-stage recorder at site 0.5 mile downstream at datum 79.25 ft above mean sea level (now used for high-water periods).

EXTREMES.--Current year: Maximum discharge, 7,800 cfs Jan. 18 (gage height, 10.56 ft), by flood routing; no flow for several months.

Period of record (1952-63, 1964 to current year): Maximum discharge, 80,000 cfs Jan. 25, 1969 (gage height, 24.20 ft, from supplementary gage); no flow at times in each year.

Flood of Jan. 9, 1907, 120,000 cfs (gage height, 22.0 ft, site and datum then in use), from discharge-mean depth study.

REMARKS.--Records fair below 100 cfs and poor above. Flow regulated by Jameson Lake, Gibraltar Reservoir, and since November 1952 by Lake Cachuma (see sta 11121000, 11122000, 11125500). Water diverted out of Jameson Lake, Gibraltar Reservoir, and Lake Cachuma to cities of Montecito, Santa Barbara, and Goleta for municipal supply. Water pumped from wells along banks of river for irrigation in valley upstream.

DISCHARGE, IN CUBIC FEET PER SECOND, WATER YEAR OCTOBER 1972 TO SEPTEMBER 1973

DAY	OCT	NOV	DEC	JAN	FEB	MAR	APR	MAY	JUN	JUL	AUG	SEP
1		0		0	45	500	410	66	23	4.8		
2		0		0	42	340	360	64	25	4.0		
3		0		0	40	265	350	59	24	3.2		
4		0		0	65	230	350	52	25	2.6		
5		0		0	81	210	360	52	25	2.1		
6		0		0	340	205	300	43	24	1.7		
7		0		0	630	280	325	37	23	1.4		
8		0		0	482	1,010	330	32	22	1.1		
9		0		0	340	460	305	29	21	.90		
10		0		0	989	400	305	27	20	.70		
11		0		0	2,500	450	280	25	20	.40		
12		0		0	1,190	430	260	23	22	.10		
13		0		0	1,140	430	240	21	23	.05		
14		.09		0	750	412	220	19	23	0		
15		0		0	565	388	190	17	22	0		
16		7.7		150	454	370	147	16	20	0		
17		24		50	358	325	144	15	20	0		
18		.03		1,620	290	325	154	16	19	0		
19		0		1,000	250	330	158	15	18	0		
20		0		300	225	1,040	141	14	16	0		
21		0		150	215	880	135	16	14	0		
22		0		135	195	740	129	19	13	0		
23		0		83	182	620	117	20	12	0		
24		0		50	600	550	106	21	12	0		
25		0		30	484	450	96	20	12	0		
26		0		25	358	460	89	18	11	0		
27		0		40	1,060	460	78	18	10	0		
28		0		39	1,040	480	74	17	8.8	0		
29		0		43	------	410	71	16	7.2	0		
30		0		43	------	400	68	18	6.0	0		
31		------		50	------	420	------	20	------	0		------
TOTAL	0	31.82	0	3,808	14,910	14,270	6,292	845	541.0	23.05	0	0
MEAN	0	1.06	0	123	533	460	210	27.3	18.0	.74	0	0
MAX	0	24	0	1,620	2,500	1,040	410	66	25	4.8	0	0
MIN	0	0	0	0	40	205	68	14	6.0	0	0	0
AC-FT	0	63	0	7,550	29,570	28,300	12,480	1,680	1,070	46	0	0

CAL YR 1972 TOTAL 1,289.22 MEAN 3.5 MAX 55 MIN 0 AC-FT 2,560
WTR YR 1973 TOTAL 40,720.87 MEAN 112 MAX 2,500 MIN 0 AC-FT 80,770

NOTE.--No gage-height record or stage-discharge relation indefinite Jan. 17 to May 15, July 8 to Aug. 8.

11133700 PURISIMA CREEK NEAR LOMPOC, CALIF.

LOCATION.--Lat 34°41'34", long 120°25'51", in La Purisima Grant, Santa Barbara County, on right bank 1.1 miles northeast of junction of Buener Road and Lompoc-Casmalia Road, and 4.0 miles northeast of Lompoc.

DRAINAGE AREA.--4.75 sq mi.

PERIOD OF RECORD.--October 1970 to current year.

GAGE.--Water-stage recorder. Altitude of gage is 270 ft (from topographic map).

EXTREMES.--Current year: Maximum discharge, 71 cfs Jan. 18 (gage height, 2.23 ft), from rating curve extended as explained below; no flow most of year.
Period of record: Maximum discharge, 71 cfs Jan. 18, 1973 (gage height, 2.23 ft), from rating curve extended above 2.2 cfs on basis of slope-area measurement of peak flow; no flow most of each year.

REMARKS.--Records poor. No regulation or diversion above station.

DISCHARGE, IN CUBIC FEET PER SECOND, WATER YEAR OCTOBER 1972 TO SEPTEMBER 1973

DAY	OCT	NOV	DEC	JAN	FEB	MAR	APR	MAY	JUN	JUL	AUG	SEP
1		0	0	0	0	1.4	.02					
2		0	0	0	.01	.03	.01					
3		0	0	0	.77	.01	0					
4		0	.27	0	.23	1.3	0					
5		0	.02	0	.09	.01	0					
6		0	.81	0	2.2	1.1	0					
7		0	.15	0	1.0	.01	.04					
8		0	.16	.07	.78	1.6	.04					
9		0	.03	.27	.61	1.2	0					
10		0	.01	.06	3.9	1.0	.04					
11		.11	0	.01	7.3	2.7	0					
12		0	0	.01	1.5	1.5	.04					
13		0	0	.01	.60	.05	0					
14		1.2	0	0	.25	.03	0					
15		3.8	0	.01	.15	.02	0					
16		1.8	0	2.9	.10	.01	.04					
17		.43	0	.06	.07	.01	0					
18		.01	0	8.5	.05	.01	0					
19		0	0	.60	.04	.20	0					
20		0	0	.30	.03	6.1	0					
21		0	0	.15	.02	4.0	0					
22		0	0	.09	.02	1.9	0					
23		0	0	.06	.02	.40	0					
24		0	0	.04	.01	.25	0					
25		0	0	.03	.01	.15	0					
26		0	0	.02	.01	.09	0					
27		0	0	.01	.58	.07	0					
28		0	0	.01	2.4	.05	0					
29		0	0	.01	------	.04	0					
30		0	0	.44	------	.03	.04					
31		------	0	.28	------	.02	------		------			------
TOTAL	0	7.35	1.45	13.94	22.75	25.29	.27	0	0	0	0	0
MEAN	0	.25	.047	.45	.81	.82	.009	0	0	0	0	0
MAX	0	3.8	.81	8.5	7.3	6.1	.04	0	0	0	0	0
MIN	0	0	0	0	0	.01	0	0	0	0	0	0
AC-FT	0	15	2.9	28	45	50	.5	0	0	0	0	0

CAL YR 1972 TOTAL 8.84 MEAN .024 MAX 3.8 MIN 0 AC-FT 18
WTR YR 1973 TOTAL 71.05 MEAN .19 MAX 8.5 MIN 0 AC-FT 141

PEAK DISCHARGE (BASE, 20 CFS)

DATE	TIME	G.H.	DISCHARGE	DATE	TIME	G.H.	DISCHARGE
11-15	2315	2.20	68	1-18	1145	2.23	71
1-16	1445	2.09	51	2-11	0300	1.81	21

11134500 SANTA YNEZ RIVER AT 13TH STREET, NEAR LOMPOC, CALIF.

LOCATION.--Lat 34°40'06", long 120°28'29", in Lompoc Grant, Santa Barbara County, on right bank at 13th Street crossing, 2.3 miles northwest of Lompoc.

DRAINAGE AREA.--820 sq mi.

PERIOD OF RECORD.--October 1954 to current year.

GAGE.--Water-stage recorder. Altitude of gage is 45 ft (from topographic map). Since Oct. 1, 1954, at various sites within 300 ft at different datums.

EXTREMES.--Current year: Maximum discharge, 6,300 cfs Jan. 18 (gage height, 12.99 ft), by flood routing; no flow most of year.
Period of record: Maximum discharge, 79,000 cfs (estimated) Jan. 25, 1969 (gage height, not determined); no flow for several months in each year.

REMARKS.--Records poor. This is a project station. Discharge above wading stages are estimated. Flow regulated by Jameson Lake, Gibraltar Reservoir, and Lake Cachuma (see sta 11121000, 11122000, 11125500). Water diverted out of basin from Jameson Lake, Gibraltar Reservoir, and Lake Cachuma to cities of Montecito, Santa Barbara, and Goleta for municipal supply. Water pumped from wells along bank of river for irrigation in valley upstream.

DISCHARGE, IN CUBIC FEET PER SECOND, WATER YEAR OCTOBER 1972 TO SEPTEMBER 1973

DAY	OCT	NOV	DEC	JAN	FEB	MAR	APR	MAY	JUN	JUL	AUG	SEP
1		0		0	.4	630	310	38	4.5			
2		0		0	.1	460	300	36	4.5			
3		0		0	3.2	320	290	33	5.0			
4		0		0	23	240	280	28	5.8			
5		0		0	40	190	270	24	7.4			
6		0		0	275	150	260	20	6.2			
7		0		0	620	420	250	17	4.0			
8		0		0	495	1,220	235	13	3.4			
9		0		0	285	610	220	11	2.0			
10		0		0	820	420	210	8.5	1.8			
11		0		0	2,800	410	200	6.4	1.8			
12		0		0	1,110	430	190	4.3	2.2			
13		0		0	1,070	490	180	4.0	4.4			
14		0		0	700	400	165	2.7	3.8			
15		0		0	530	380	150	1.8	3.2			
16		3.6		66	435	360	140	.99	2.2			
17		17		128	350	300	130	.61	1.1			
18		.01		1,610	290	300	120	.43	.50			
19		0		1,360	255	320	110	.22	.10			
20		0		242	235	1,110	100	.13	0			
21		0		62	220	940	90	.06	0			
22		0		16	195	780	80	17	0			
23		0		2.2	190	650	70	4.6	0			
24		0		.20	545	550	65	4.6	0			
25		0		0	490	490	62	3.7	0			
26		0		0	360	460	58	1.7	0			
27		0		0	1,140	400	54	.15	0			
28		0		0	1,550	360	48	.10	0			
29		0		1.2	------	370	45	.01	0			
30		0		5.3	------	340	41	0	0			
31		------		2.5	------	320	------	2.3	------			------
TOTAL	0	20.61	0	3,495.40	15,026.7	14,820	4,723	284.30	63.90	0	0	0
MEAN	0	.69	0	113	537	478	157	9.17	2.13	0	0	0
MAX	0	17	0	1,610	2,800	1,220	310	38	7.4	0	0	0
MIN	0	0	0	0	.10	150	41	0	0	0	0	0
AC-FT	0	41	0	6,930	29,810	29,400	9,370	564	127	0	0	0

CAL YR 1972 TOTAL 121.59 MEAN .3 MAX 20 MIN 0 AC-FT 241
WTR YR 1973 TOTAL 38,433.91 MEAN 105 MAX 2,800 MIN 0 AC-FT 76,230

NOTE.--No gage-height record Apr. 6 to May 8. Stage-discharge relation indefinite Jan. 15-19, Feb. 5 to May 8.

11134800 MIGUELITO CREEK AT LOMPOC, CALIF.

LOCATION.--Lat 34°37'57", long 120°27'51", in Lompoc Grant, Santa Barbara County, on right bank at upstream end of debris dam, and 1,500 ft south of Lompoc Union High School.

DRAINAGE AREA.--11.6 sq mi.

PERIOD OF RECORD.--October 1970 to current year.

GAGE.--Water-stage recorder and concrete control. Datum of gage is 97.94 ft above mean sea level (Santa Barbara County bench mark).

EXTREMES.--Current year: Maximum discharge, 390 cfs Jan. 18 (gage height, 4.60 ft), from rating curve extended as explained below; no flow many days.
Period of record: Maximum discharge, 450 cfs Dec. 27, 1971 (gage height, 5.02 ft), from rating curve extended above 144 cfs on basis of slope-area measurement of maximum flow; no flow many days in each year.
Flood of Jan. 25, 1969, reached a stage of 5.83 ft, from floodmark (discharge, 680 cfs).

REMARKS.--Records fair. No regulation or diversion above station; some pumping from wells along stream for irrigation.

DISCHARGE, IN CUBIC FEET PER SECOND, WATER YEAR OCTOBER 1972 TO SEPTEMBER 1973

DAY	OCT	NOV	DEC	JAN	FEB	MAR	APR	MAY	JUN	JUL	AUG	SEP
1	0	0	0	0	.13	11	2.4	1.1	1.1	0	.06	.09
2	0	0	0	0	.09	8.2	2.4	1.1	1.0	.09	.05	.13
3	0	0	0	0	.98	5.4	2.4	1.1	1.0	.03	.05	.18
4	0	.24	0	0	.45	8.5	2.0	1.1	.98	.03	.06	.24
5	0	0	0	0	.24	6.4	1.8	1.1	.97	.09	0	.18
6	0	0	1.5	0	7.0	7.6	1.8	1.1	.86	.09	.06	.13
7	0	0	.76	0	4.5	6.0	1.8	1.1	.64	.13	.03	.13
8	0	0	0	0	2.5	15	1.7	1.1	.64	.09	.09	.06
9	0	0	0	1.0	1.0	9.4	1.7	1.3	.24	.03	.08	.09
10	0	0	0	0	38	7.3	1.6	1.3	.30	0	.08	.09
11	0	.65	0	0	74	13	1.6	1.3	.18	.13	.07	.09
12	0	0	0	0	37	7.6	1.6	1.3	.24	.13	.03	.13
13	0	.09	0	0	15	6.2	1.5	1.1	.09	.13	.06	.09
14	0	8.0	0	0	12	5.2	1.5	1.3	.37	.13	.09	.06
15	.02	4.1	0	0	9.6	4.6	1.4	1.3	.24	.09	.06	.03
16	0	8.5	0	26	8.0	4.3	1.4	1.3	.30	.13	.06	.03
17	0	12	0	1.9	6.6	3.9	1.4	1.4	.45	.13	.03	.03
18	0	3.9	0	88	5.8	3.7	1.4	1.4	.45	.09	0	.03
19	0	.30	0	16	5.0	8.0	1.3	1.3	.45	.09	0	0
20	0	.06	0	1.3	4.5	21	1.3	1.3	.45	0	.06	0
21	0	.03	0	.40	4.0	14	1.3	1.1	0	.09	.06	.03
22	0	.02	0	.25	3.5	14	1.3	1.3	0	.13	0	.03
23	0	.02	0	.20	3.0	9.0	1.2	1.4	0	.18	0	0
24	0	.02	0	.15	26	7.4	1.2	1.4	0	.18	0	.03
25	0	.02	0	.12	4.5	6.0	1.2	1.4	0	.06	.03	.03
26	0	.01	0	.10	10	5.2	1.2	1.4	.09	.07	.06	.03
27	0	.01	0	.09	60	4.5	1.2	1.4	.03	.07	.06	.03
28	0	.01	0	.08	17	3.7	1.1	1.4	0	.07	.06	.03
29	0	.01	0	.15	------	3.1	1.1	1.4	0	.07	.03	0
30	0	0	0	2.6	------	2.7	1.1	1.3	0	.06	.06	.03
31	0	------	0	.20	------	2.4	------	1.2	------	.06	.07	------
TOTAL	.02	37.99	2.26	138.54	360.39	234.3	45.9	39.1	11.07	2.67	1.45	2.05
MEAN	.0006	1.27	.073	4.47	12.9	7.56	1.53	1.26	.37	.086	.047	.068
MAX	.02	12	1.5	88	74	21	2.4	1.4	1.1	.18	.09	.24
MIN	0	0	0	0	.09	2.4	1.1	1.1	0	0	0	0
AC-FT	.04	75	4.5	275	715	465	91	78	22	5.3	2.9	4.1

CAL YR 1972 TOTAL 52.96 MEAN .14 MAX 12 MIN 0 AC-FT 105
WTR YR 1973 TOTAL 875.74 MEAN 2.40 MAX 88 MIN 0 AC-FT 1,740

PEAK DISCHARGE (BASE, 100 CFS)

DATE	TIME	G.H.	DISCHARGE	DATE	TIME	G.H.	DISCHARGE
11-14	0515	2.82	120	2-12	1900	2.87	134
11-17	0030	2.79	116	2-27	1830	3.62	243
1-16	1400	3.54	231	3-8	0500	2.91	139
1-18	1215	4.60	390	3-11	0445	2.65	103
2-6	1515	3.01	153	3-19	2400	3.45	218
2-10	1115	3.71	256	3-21	1445	2.93	142
2-11	0330	4.29	344				

11135000 SANTA YNEZ RIVER AT PINE CANYON, NEAR LOMPOC, CALIF.

LOCATION.--Lat 34°40'20", long 120°29'30", in Lompoc Grant, Santa Barbara County, on right bank at Floradale Avenue bridge, 2.1 miles upstream from Santa Lucia Creek, and 3 miles northwest of Lompoc.

DRAINAGE AREA.--844 sq mi.

PERIOD OF RECORD.--May 1941 to October 1946, August 1964 to current year. Monthly discharge only for some periods, published in WSP 1315-B.

GAGE.--Water-stage recorder. Datum of gage is 40.78 ft above mean sea level. Prior to Aug. 24, 1964, at different datum. Aug. 24, 1964, to Aug. 20, 1970, at datum 0.91 ft lower.

EXTREMES.--Current year: Maximum discharge, 5,960 cfs Jan. 18 (gage height, 7.96 ft), from rating curve extended above 2,000 cfs on basis of slope-area measurement; no flow some days.
Period of record: Maximum discharge, 78,000 cfs (estimated) Jan. 25, 1969 (gage height, 24.91 ft, present datum, from floodmark); no flow at times in some years.

REMARKS.--Records poor. Flow regulated by Jameson Lake, Gibraltar Reservoir, and Lake Cachuma (see sta 11121000, 11122000, 11125500). Water diverted out of basin from Jameson Lake, Gibraltar Reservoir, and Lake Cachuma to cities of Montecito, Santa Barbara, and Goleta for municipal supply. Water pumped from wells along bank for irrigation in valley upstream.

DISCHARGE, IN CUBIC FEET PER SECOND, WATER YEAR OCTOBER 1972 TO SEPTEMBER 1973

DAY	OCT	NOV	DEC	JAN	FEB	MAR	APR	MAY	JUN	JUL	AUG	SEP
1	0	.48	.21	.75	30	650	380	45	12	.75	.02	0
2	0	.92	.21	.95	34	480	350	40	15	.95	.02	0
3	0	1.3	.21	2.2	37	330	320	36	17	.95	.01	0
4	0	.43	5.2	2.2	40	250	300	40	19	.66	.01	0
5	0	.62	1.0	2.2	44	200	290	40	18	.60	.02	.01
6	0	0	11	2.2	217	160	280	35	8.0	.42	.02	0
7	2.4	0	13	2.2	620	430	260	30	6.7	.51	.02	1.3
8	9.5	0	3.9	14	508	1,560	250	25	5.2	.49	.01	3.1
9	.64	0	.95	53	221	760	240	22	3.6	.36	.01	3.0
10	1.3	0	.58	17	882	450	225	22	2.7	.36	.01	3.1
11	.46	10	.42	4.8	2,960	400	210	17	2.8	.25	0	3.4
12	.05	7.8	.42	1.3	1,040	430	190	14	2.9	.25	0	4.0
13	.61	4.8	.42	.25	994	550	170	14	4.9	.21	.02	4.7
14	.62	57	.42	.25	655	400	150	15	4.2	.25	.07	4.8
15	.99	1.1	.42	.25	514	380	130	13	3.2	.21	.06	4.4
16	1.2	28	.42	209	418	340	125	11	2.3	.36	.03	7.0
17	.63	33	.42	472	340	270	120	10	1.4	.08	.02	6.7
18	.34	.29	.50	1,270	290	280	125	9.2	1.5	.10	.06	.71
19	.18	0	.58	1,160	261	310	130	9.2	1.4	.13	.05	.52
20	.19	0	.58	250	243	1,200	115	9.5	1.0	.10	.06	.40
21	.09	.06	.66	120	221	1,000	100	9.0	.95	.09	.07	.31
22	.05	.07	.75	80	201	810	90	9.2	.85	.08	.04	.22
23	.02	0	.66	50	201	680	83	15	.85	.07	.04	.22
24	.05	0	.66	35	490	560	75	14	.75	.08	.05	.25
25	.02	0	.66	26	502	500	70	13	.75	.10	.05	.25
26	.01	0	.66	17	365	470	66	12	1.0	.04	.06	.21
27	.06	.04	.75	30	1,220	480	60	9.0	1.0	.02	.06	.13
28	.08	.07	.75	40	1,880	490	55	7.0	.95	.02	.14	.25
29	.18	.10	.95	37	------	480	50	6.8	.85	.02	.05	.30
30	.24	.21	.85	34	------	450	47	8.5	.85	.01	0	.42
31	.37	------	.85	32	------	410	------	8.5	------	.02	0	------
TOTAL	20.28	146.29	49.06	3,965.55	15,428	16,160	5,056	568.9	141.60	8.54	1.08	49.70
MEAN	.65	4.88	1.58	128	551	521	169	18.4	4.72	.28	.035	1.66
MAX	9.5	57	13	1,270	2,960	1,560	380	45	19	.95	.14	7.0
MIN	0	0	.21	.25	30	160	47	6.8	.75	.01	0	0
AC-FT	40	290	97	7,870	30,600	32,050	10,030	1,130	281	17	2.1	99

CAL YR 1972 TOTAL 607.81 MEAN 1.6 MAX 57 MIN 0 AC-FT 1,210
WTR YR 1973 TOTAL 41,595.00 MEAN 114 MAX 2,960 MIN 0 AC-FT 82,500

NOTE.--No gage-height record Jan. 20 to Feb. 5, Mar. 11 to May 3.

11135800 SAN ANTONIO CREEK AT LOS ALAMOS, CALIF.

LOCATION.--Lat 34°44'36", long 120°16'12", in Los Alamos Grant, Santa Barbara County, on left bank 100 ft upstream from northbound lane of Highway 101 at Los Alamos.

DRAINAGE AREA.--34.9 sq mi.

PERIOD OF RECORD.--October 1970 to current year.

GAGE.--Water-stage recorder. Altitude of gage is 580 ft (from topographic map).

EXTREMES.--Current year: Maximum discharge, 233 cfs Jan. 18 (gage height, 3.60 ft), from rating curve extended as explained below; no flow most of year.
Period of record: Maximum discharge, 233 cfs Jan. 18, 1973 (gage height, 3.60 ft), from rating curve extended above 3 cfs on basis of slope-area measurements at gage heights 2.16 and 3.60 ft; no flow most of each year.

REMARKS.--Records good. No regulation above station. Pumping for irrigation of about 1,000 acres above station.

DISCHARGE, IN CUBIC FEET PER SECOND, WATER YEAR OCTOBER 1972 TO SEPTEMBER 1973

DAY	OCT	NOV	DEC	JAN	FEB	MAR	APR	MAY	JUN	JUL	AUG	SEP
1		0		0	.07	.81	.08					
2		0		0	.09	.46	.05					
3		0		0	.78	.36	.04					
4		0		0	1.4	.59	.02					
5		0		0	.24	.41	.02					
6		0		0	.35	.80	.01					
7		0		0	.50	.60	0					
8		0		0	.25	5.4	0					
9		0		.10	.15	1.5	0					
10		0		.18	10	.71	0					
11		0		.05	50	5.1	0					
12		0		.01	10	5.1	0					
13		0		0	7.0	1.4	0					
14		.05		0	4.0	.99	0					
15		.05		0	2.0	.76	0					
16		.72		.75	1.0	.66	0					
17		.37		.40	.36	.60	0					
18		.02		28	.26	.65	0					
19		0		3.0	.19	.85	0					
20		0		.50	.16	73	0					
21		0		.24	.11	36	0					
22		0		.17	.10	17	0					
23		0		.09	.10	15	0					
24		0		.11	.38	3.5	0					
25		0		.11	.19	2.6	0					
26		0		.11	.16	2.2	0					
27		0		.09	6.4	1.6	0					
28		0		.09	26	.87	0					
29		0		.07	------	.22	0					
30		0		.17	------	.17	0					
31		------		.11	------	.12	------		------			------
TOTAL	0	1.21	0	34.35	122.24	180.03	.22	0	0	0	0	0
MEAN	0	.040	0	1.11	4.37	5.81	.007	0	0	0	0	0
MAX	0	.72	0	28	50	73	.08	0	0	0	0	0
MIN	0	0	0	0	.07	.12	0	0	0	0	0	0
AC-FT	0	2.4	0	68	242	357	.4	0	0	0	0	0

CAL YR 1972 TOTAL 2.99 MEAN .008 MAX .72 MIN 0 AC-FT 5
WTR YR 1973 TOTAL 338.05 MEAN .93 MAX 73 MIN 0 AC-FT 671

PEAK DISCHARGE (BASE, 30 CFS)

DATE	TIME	G.H.	DISCHARGE	DATE	TIME	G.H.	DISCHARGE
1-18	1500	3.60	233	3-20	0445	3.19	176
2-11	unknown	--	unknown	3-21	1900	2.75	114
2-28	0115	2.72	110				

NOTE.--No gage-height record Feb. 6-16.

11136100 SAN ANTONIO CREEK NEAR CASMALIA, CALIF.

LOCATION.--Lat 34°46'56", long 120°31'47", in Jesus Maria Grant, Santa Barbara County, on Vandenberg Military Reservation on downstream side of left center pile bent of San Antonio Road bridge, 0.7 mile east of junction of San Antonio Road and Lompoc-Casmalia Road, and 3.8 miles south of Casmalia.

DRAINAGE AREA.--135 sq mi.

PERIOD OF RECORD.--October 1955 to current year.

GAGE.--Water-stage recorder. Concrete control since August 1970. Altitude of gage is 160 ft (from topographic map). Prior to June 27, 1958, at datum 2.00 ft higher.

AVERAGE DISCHARGE.--18 years, 5.50 cfs (3,980 acre-ft per year).

EXTREMES.--Current year: Maximum discharge, 1,060 cfs Feb. 11 (gage height, 9.10 ft); minimum daily, 0.23 cfs Oct. 8, 11.
Period of record: Maximum discharge, 2,300 cfs Feb. 25, 1969 (gage height, 11.79 ft); minimum daily, 0.10 cfs June 19, 20, 1957.

REMARKS.--Records good. No regulation above station. Flow affected by pumping from wells along stream for irrigation above station.

DISCHARGE, IN CUBIC FEET PER SECOND, WATER YEAR OCTOBER 1972 TO SEPTEMBER 1973

DAY	OCT	NOV	DEC	JAN	FEB	MAR	APR	MAY	JUN	JUL	AUG	SEP
1	.36	.46	1.3	2.1	3.9	24	3.0	1.5	.87	.55	.57	.41
2	.36	.46	1.3	2.0	3.3	13	2.8	1.5	.88	.55	.57	.43
3	.36	.46	1.4	2.0	3.5	9.3	2.8	1.3	.85	.56	.51	.40
4	.31	.51	2.5	2.1	9.1	9.2	2.7	1.3	.84	.54	.51	.43
5	.31	.64	2.8	2.1	5.4	8.6	2.7	1.3	.79	.54	.57	.46
6	.26	.64	2.4	2.0	22	8.2	2.8	1.3	.74	.53	.64	.45
7	.26	.64	4.9	2.0	32	14	2.8	1.3	.76	.61	.64	.43
8	.23	.64	6.4	2.3	12	38	2.7	1.2	.71	.65	.64	.41
9	.26	.64	4.9	5.6	6.0	20	2.6	1.2	.71	.62	.64	.42
10	.26	.64	3.0	8.2	15	12	2.5	1.2	.71	.59	.57	.42
11	.23	2.0	2.5	4.6	310	49	2.4	1.1	.71	.59	.57	.45
12	.46	2.3	2.3	3.2	111	25	2.4	1.1	.71	.61	.51	.46
13	.87	2.3	2.3	2.8	153	17	2.4	1.1	.71	.62	.57	.46
14	.80	12	2.1	2.8	30	16	2.4	1.1	.68	.66	.57	.44
15	.72	10	2.0	2.8	25	14	2.3	1.2	.70	.69	.51	.46
16	.64	115	2.0	55	10	13	2.2	1.2	.66	.68	.46	.47
17	.64	29	2.0	37	6.7	12	2.1	1.1	.61	.69	.46	.46
18	.64	3.5	2.0	297	5.6	11	2.1	1.1	.62	.61	.46	.45
19	.64	3.0	2.0	101	4.9	10	1.9	1.1	.56	.62	.46	.47
20	.51	2.3	2.0	15	4.5	185	1.8	1.1	.56	.62	.46	.46
21	.51	1.9	2.0	7.9	4.2	69	1.6	1.0	.52	.61	.46	.45
22	.46	1.8	2.0	5.4	4.0	79	1.6	.96	.53	.61	.46	.41
23	.46	1.6	2.0	3.9	4.0	48	1.6	.98	.53	.59	.46	.45
24	.46	1.4	1.9	3.2	9.0	30	1.7	.98	.54	.53	.46	.43
25	.46	1.4	1.9	3.0	7.5	15	1.5	.88	.54	.57	.41	.42
26	.46	1.4	1.9	2.9	5.1	6.5	1.5	.86	.52	.57	.41	.42
27	.46	1.3	2.0	2.8	37	5.5	1.6	.80	.54	.57	.41	.38
28	.46	1.3	2.0	2.6	159	4.4	1.6	.77	.55	.57	.36	.37
29	.46	1.3	2.1	2.7	------	3.7	1.6	.75	.55	.57	.36	.42
30	.46	1.3	3.7	5.4	------	3.5	1.6	.76	.55	.57	.38	.43
31	.46	------	3.0	5.3	------	3.3	------	.80	------	.57	.39	------
TOTAL	14.23	201.83	76.6	596.7	1,002.7	776.2	65.3	33.84	19.75	18.46	15.45	13.02
MEAN	.46	6.73	2.47	19.2	35.8	25.0	2.18	1.09	.66	.60	.50	.43
MAX	.87	115	6.4	297	310	185	3.0	1.5	.88	.69	.64	.47
MIN	.23	.46	1.3	2.0	3.3	3.3	1.5	.75	.52	.53	.36	.37
AC-FT	28	400	152	1,180	1,990	1,540	130	67	39	37	31	26

CAL YR 1972 TOTAL 580.41 MEAN 1.59 MAX 115 MIN .23 AC-FT 1,150
WTR YR 1973 TOTAL 2,834.08 MEAN 7.76 MAX 310 MIN .23 AC-FT 5,620

NOTE.--No gage-height record Feb. 10, 11.

PEAK DISCHARGE (BASE, 50 CFS)

DATE	TIME	G.H.	DISCHARGE	DATE	TIME	G.H.	DISCHARGE
11-14	1745	5.35	53	2-27	2345	6.65	251
11-16	0430	7.88	574	2-28	0815	6.74	268
1-16	2045	6.68	256	3-8	1300	5.60	80
1-18	1745	9.07	1,040	3-11	1145	5.95	125
2-6	1700	5.47	66	3-20	0700	7.28	395
2-11	unknown	9.10	1,060	3-21	2030	6.41	203
2-13	0100	6.77	274				

11136400 WAGON ROAD CREEK NEAR STAUFFER, CALIF.

LOCATION.--Lat 34°42'32", long 119°12'25", in SE¼SE¼SE¼ sec.9, T.7 N., R.22 W., Ventura County, on left bank 50 ft downstream from Park Canyon Creek, and 10 miles east of Ozena Guard Station.

DRAINAGE AREA.--17.9 sq mi.

PERIOD OF RECORD.--July 1972 to current year.

GAGE.--Water-stage recorder. Altitude of gage is 4,500 ft (from topographic map).

EXTREMES.--July to September 1972: Maximum discharge during period, 700 cfs Aug. 27 (gage height, 4.76 ft, from floodmark); no flow many days.
Water year 1973: Maximum discharge, 423 cfs Feb. 11 (gage height, 4.15 ft); minimum daily, 0.01 cfs many days.

REMARKS.--Records poor. No diversion or regulation above station.

COOPERATION.--Sixteen discharge measurements furnished by Ventura County Flood Control District.

DISCHARGE, IN CUBIC FEET PER SECOND, WATER YEAR OCTOBER 1971 TO SEPTEMBER 1972

DAY	OCT	NOV	DEC	JAN	FEB	MAR	APR	MAY	JUN	JUL	AUG	SEP
1										0	.01	0
2										0	.01	0
3										0	.01	0
4										0	.01	0
5										0	.01	0
6										0	.01	0
7										0	.01	0
8										0	.01	0
9										0	.01	0
10										0	.01	0
11										0	.01	0
12										0	.01	0
13										0	.01	0
14										0	.01	0
15										0	.01	0
16										0	.01	0
17										0	.01	0
18										0	0	0
19										0	0	0
20										0	0	0
21										0	0	.03
22										0	0	.11
23										0	0	.12
24										0	0	.12
25										0	0	.12
26										.01	0	.12
27										.01	16	.12
28										.01	.62	.12
29									0	.01	0	.12
30					------				0	.01	0	.13
31		------			------		------		------	.01	0	------
TOTAL										.06	16.79	1.11
MEAN										.002	.54	.037
MAX										.01	16	.13
MIN										0	0	0
AC-FT										.1	33	2.2

11136400 WAGON ROAD CREEK NEAR STAUFFER, CALIF.--Continued

DISCHARGE, IN CUBIC FEET PER SECOND, WATER YEAR OCTOBER 1972 TO SEPTEMBER 1973

DAY	OCT	NOV	DEC	JAN	FEB	MAR	APR	MAY	JUN	JUL	AUG	SEP
1	.14	.01	.70	.34	.10	11	4.4	.86	.23	.10	.05	.02
2	11	.01	.86	.26	.10	8.5	3.4	.86	.23	.10	.05	.01
3	.11	.01	.86	.14	.56	6.0	3.6	.86	.23	.10	.06	.01
4	.02	.11	2.3	.26	7.2	5.0	3.6	.86	.23	.10	.07	.01
5	.02	.02	.39	.26	6.0	2.7	2.9	.86	.23	.10	.07	.01
6	.02	.02	.44	.23	26	3.9	2.1	.78	.23	.10	.05	.01
7	.02	.03	.56	.23	6.0	5.0	2.3	.78	.23	.09	.05	.02
8	.02	.04	.44	.95	4.0	9.5	2.1	.63	.20	.09	.04	.02
9	.02	.04	.56	1.8	2.6	8.5	2.3	.63	.20	.09	.04	.02
10	.02	.04	.50	.78	79	5.0	2.3	.63	.20	.09	.04	.02
11	.01	1.7	.39	.56	295	10	2.0	.63	.20	.09	.03	.02
12	.01	.17	.56	.78	85	6.4	1.8	.63	.20	.09	.04	.02
13	.01	.03	.56	.44	48	6.0	1.8	.56	.20	.09	.04	.02
14	.01	28	.78	.34	20	6.0	2.0	1.3	.20	.09	.04	.02
15	.01	1.3	1.3	.23	14	5.6	1.7	.90	.20	.09	.03	.02
16	.01	.50	1.2	9.0	10	5.2	1.5	.70	.20	.09	.03	.02
17	.01	.27	.30	4.1	8.5	4.8	1.4	.56	.20	.09	.03	.02
18	.09	.16	.14	3.9	7.0	4.5	1.3	.44	.17	.09	.03	.02
19	.03	.14	.17	3.4	6.0	4.1	1.3	.34	.17	.10	.03	.02
20	.01	.12	.10	2.7	5.5	13	1.3	.30	.14	.09	.02	.02
21	.01	.11	.10	1.8	5.2	12	1.3	.30	.14	.09	.02	.02
22	.01	.10	.20	1.3	5.0	16	1.3	.26	.12	.09	.02	.02
23	.01	.16	.12	1.0	4.8	14	1.2	.23	.12	.07	.03	.02
24	.01	.26	.10	.26	4.6	12	1.2	.23	.12	.07	.03	.02
25	.01	.34	.12	.34	4.4	9.8	1.1	.20	.12	.07	.03	.02
26	.01	.44	.14	.70	4.2	9.0	1.1	.20	.10	.06	.03	.02
27	.01	.50	.14	.78	25	7.6	.95	.23	.10	.06	.01	.02
28	.01	.56	.17	.26	40	7.6	.95	.20	.10	.07	.02	.02
29	.01	.70	.34	.17	------	5.6	.95	.20	.10	.09	.02	.02
30	.01	.70	.39	.30	------	4.4	.95	.20	.10	.10	.02	.02
31	.01	------	.39	.26	------	4.7	------	.23	------	.07	.02	------
TOTAL	11.70	36.59	15.32	37.87	723.76	233.4	56.10	16.59	5.21	2.71	1.09	.55
MEAN	.38	1.22	.49	1.22	25.8	7.53	1.87	.54	.17	.087	.035	.018
MAX	11	28	2.3	9.0	295	16	4.4	1.3	.23	.10	.07	.02
MIN	.01	.01	.10	.14	.10	2.7	.95	.20	.10	.06	.01	.01
AC-FT	23	73	30	75	1,440	463	111	33	10	5.4	2.2	1.1

WTR YR 1973 TOTAL 1,140.89 MEAN 3.13 MAX 295 MIN .01 AC-FT 2,260

PEAK DISCHARGE (BASE, 50 CFS)

DATE	TIME	G.H.	DISCHARGE	DATE	TIME	G.H.	DISCHARGE
10-2	1745	3.42	74	2-11	0530	4.15	423
11-14	0745	3.65	121	2-27	2230	3.32	149
2-6	0900	3.15	97				

11136480 REYES CREEK NEAR VENTUCOPA, CALIF.

LOCATION.--Lat 34°41'39", long 119°19'02", in SW¼NE¼SE¼ sec.21, T.7 N., R.23 W., Ventura County, on left bank 1,900 ft upstream from mouth, and 3 miles east of Ozena Guard Station.

DRAINAGE AREA.--4.62 sq mi.

PERIOD OF RECORD.--July 1972 to current year.

GAGE.--Water-stage recorder. Altitude of gage is 3,690 ft (from topographic map).

EXTREMES.--July to September 1972: No flow during period.
Water year 1973: Maximum discharge, 138 cfs Feb. 11 (gage height, 3.20 ft), from rating curve extended above 22 cfs on basis of slope-area measurement of maximum flow; no flow Oct. 1, Aug. 20.

REMARKS.--Records good. Slight diversion upstream for domestic use.

COOPERATION.--Eleven discharge measurements furnished by Ventura County Flood Control District.

DISCHARGE, IN CUBIC FEET PER SECOND, WATER YEAR OCTOBER 1972 TO SEPTEMBER 1973

DAY	OCT	NOV	DEC	JAN	FEB	MAR	APR	MAY	JUN	JUL	AUG	SEP
1	0	.38	.81	1.2	1.4	13	4.3	8.1	2.4	1.0	.35	.22
2	.06	.38	.86	1.2	1.4	10	4.2	7.8	2.5	1.0	.32	.20
3	.10	.38	.86	1.2	1.6	8.4	4.0	7.5	2.3	.96	.35	.20
4	.08	.38	1.2	1.2	2.6	7.8	4.0	7.1	2.3	.91	.35	.26
5	.06	.38	1.3	1.2	2.6	6.5	4.0	6.8	2.1	.86	.35	.29
6	.05	.38	1.1	1.5	19	6.5	4.5	5.9	2.1	.86	.35	.29
7	.04	.38	1.2	1.5	19	6.1	5.7	5.5	2.0	.86	.35	.29
8	.06	.38	1.2	1.2	7.5	6.3	7.1	5.7	2.0	.86	.32	.29
9	.09	.41	1.2	1.5	4.9	5.9	7.1	5.7	1.9	.81	.32	.26
10	.12	.41	1.1	1.4	16	5.7	6.5	5.5	1.9	.76	.32	.29
11	.16	.54	1.1	1.3	66	6.1	7.1	5.1	1.9	.71	.29	.32
12	.14	.50	1.2	1.3	22	5.9	8.1	5.1	1.9	.71	.29	.32
13	.16	.41	1.1	1.3	13	5.5	8.4	4.8	1.8	.71	.24	.32
14	.20	2.0	1.2	1.3	11	5.5	7.1	4.9	1.9	.71	.24	.35
15	.26	.96	1.2	1.3	9.4	5.1	5.9	4.8	1.9	.71	.22	.35
16	.26	2.5	1.2	3.7	8.1	5.3	5.3	4.5	1.9	.66	.20	.32
17	.26	2.0	1.2	3.6	6.8	5.3	5.3	4.3	1.9	.66	.20	.35
18	.29	1.2	1.2	5.9	6.1	5.3	6.5	3.9	1.8	.62	.22	.35
19	.32	.96	1.2	4.5	5.7	5.1	6.1	3.7	1.7	.58	.16	.35
20	.35	.86	1.4	2.3	5.3	6.1	5.3	3.6	1.6	.58	0	.35
21	.32	.76	1.4	1.9	5.1	5.5	5.1	3.6	1.5	.58	.03	.38
22	.24	.71	1.4	1.7	4.9	5.1	4.9	3.4	1.5	.58	.03	.32
23	.22	.71	1.3	1.5	4.6	4.6	5.1	3.3	1.5	.58	.07	.32
24	.20	.71	1.3	1.4	4.8	4.3	6.5	3.1	1.4	.54	.14	.35
25	.20	.71	1.3	1.5	4.5	4.6	8.7	2.9	1.4	.54	.14	.35
26	.24	.71	1.3	1.5	4.3	4.6	10	2.8	1.3	.47	.18	.32
27	.26	.81	1.3	1.4	13	4.8	11	2.8	1.2	.44	.20	.32
28	.29	.86	1.3	1.4	25	4.6	11	2.6	1.2	.44	.18	.29
29	.32	.81	1.3	1.4	------	4.5	10	2.5	1.1	.38	.16	.26
30	.32	.81	1.2	1.4	------	4.3	9.0	2.5	1.1	.38	.18	.29
31	.35	------	1.2	1.5	------	4.5	------	2.4	------	.35	.20	------
TOTAL	6.02	23.39	37.13	56.2	295.6	182.8	197.8	142.2	53.0	20.81	6.95	9.17
MEAN	.19	.78	1.20	1.81	10.6	5.90	6.59	4.59	1.77	.67	.22	.31
MAX	.35	2.5	1.4	5.9	66	13	11	8.1	2.5	1.0	.35	.38
MIN	0	.38	.81	1.2	1.4	4.3	4.0	2.4	1.1	.35	0	.20
AC-FT	12	46	74	111	586	363	392	282	105	41	14	18

CAL YR 1972 TOTAL 66.54 MEAN .18 MAX 2.5 MIN 0 AC-FT 132
WTR YR 1973 TOTAL 1,031.07 MEAN 2.82 MAX 66 MIN 0 AC-FT 2,050

PEAK DISCHARGE (BASE, 20 CFS)

DATE	TIME	G.H.	DISCHARGE	DATE	TIME	G.H.	DISCHARGE
2-6	2230	2.39	41	2-27	2330	2.35	39
2-11	0400	3.20	138				

11136800 CUYAMA RIVER BELOW BUCKHORN CANYON, NEAR SANTA MARIA, CALIF.

LOCATION.--Lat 35°01'19", long 120°13'39", in SW¼ sec.14, T.11 N., R.32 W., San Luis Obispo-Santa Barbara County line, on downstream side of second pier from right abutment of bridge on State Highway 166, 0.7 mile downstream from Buckhorn Canyon, and 13 miles northeast of Santa Maria.

DRAINAGE AREA.--886 sq mi.

PERIOD OF RECORD.--October 1903 to December 1905 (published as Santa Maria River near Santa Maria), October 1959 to current year. Monthly discharge only for October 1903 and July 1904 and yearly estimate for water year 1941 (incomplete), published in WSP 1315-B.

GAGE.--Water-stage recorder. Altitude of gage is 760 ft (from topographic map). Prior to October 1959, nonrecording gage at different site and datum.

AVERAGE DISCHARGE.--16 years, 23.4 cfs (16,950 acre-ft per year).

EXTREMES.--Current year: Maximum discharge, 4,000 cfs Feb. 11 (gage height, 9.10 ft), from rating curve extended above 500 cfs on basis of slope-area measurement at gage height 10.85 ft; no flow Oct. 1-18, Oct. 24 to Nov. 9.
Period of record: Maximum discharge, 17,800 cfs Feb. 25, 1969 (gage height, 13.70 ft), from rating curve extended above 4,900 cfs on basis of slope-area measurement at gage height 10.85 ft; no flow at times in most years.

REMARKS.--Records good except those for period of no gage-height record, which are poor. No regulation above station. Pumping from wells along stream for irrigation in Upper Cuyama Valley.

DISCHARGE, IN CUBIC FEET PER SECOND, WATER YEAR OCTOBER 1972 TO SEPTEMBER 1973

DAY	OCT	NOV	DEC	JAN	FEB	MAR	APR	MAY	JUN	JUL	AUG	SEP
1	0	0	.17	.17	1.6	47	19	4.5	3.1	1.6	.70	.33
2	0	0	.17	.17	1.6	15	15	4.4	3.1	1.6	.70	.33
3	0	0	.17	.17	1.7	8.3	12	4.4	3.1	1.3	.70	.33
4	0	0	.20	.17	2.5	10	10	4.3	3.1	1.1	.70	.38
5	0	0	.17	.17	2.3	7.8	8.0	4.2	3.0	1.1	.70	.33
6	0	0	.23	.17	3.9	9.3	7.8	4.2	3.0	.97	.55	.33
7	0	0	.73	.17	46	12	7.6	4.1	3.0	.97	.55	.33
8	0	0	.52	.17	43	20	7.4	4.1	3.0	.97	.49	.29
9	0	0	.31	.23	10	16	7.2	4.0	2.6	.97	.49	.29
10	0	.23	.23	.23	70	12	7.0	4.0	2.6	.97	.49	.29
11	0	1.6	.20	.20	1,380	49	6.8	3.9	2.6	.97	.48	.29
12	0	.88	.20	.20	708	39	6.8	3.8	2.4	.97	.47	.29
13	0	.27	.20	.20	686	24	6.5	3.8	2.4	.97	.46	.29
14	0	2.3	.17	.20	530	18	6.4	3.7	2.6	.97	.45	.29
15	0	7.9	.17	.20	332	15	6.2	3.7	2.4	.97	.45	.29
16	0	11	.17	1.6	208	12	6.0	3.7	2.2	.97	.44	.25
17	0	15	.17	2.0	130	9.7	5.9	3.7	2.0	.97	.43	.25
18	0	8.7	.17	43	90	5.3	5.8	3.6	1.9	.97	.42	.29
19	7.1	2.9	.17	110	55	5.0	5.6	3.5	1.9	.97	.41	.25
20	6.2	1.9	.17	23	35	185	5.5	3.5	1.9	.97	.41	.29
21	1.9	1.7	.17	7.5	25	205	5.4	3.5	1.9	.97	.40	.25
22	.80	1.1	.17	5.6	17	190	5.3	3.5	1.9	1.1	.39	.25
23	.09	.88	.17	4.4	14	130	5.2	3.4	1.9	.97	.39	.25
24	0	.66	.17	3.2	10	92	5.1	3.4	1.7	.97	.38	.21
25	0	.46	.17	2.8	9.3	71	5.0	3.4	1.7	.87	.37	.21
26	0	.31	.17	2.6	8.8	58	4.9	3.3	1.7	.87	.36	.25
27	0	.27	.17	2.0	11	51	4.8	3.3	1.7	.87	.35	.25
28	0	.20	.17	2.1	30	36	4.7	3.2	1.6	.87	.35	.25
29	0	.17	.17	2.1	------	33	4.6	3.2	1.6	.87	.34	.25
30	0	.17	.17	2.0	------	27	4.6	3.2	1.6	.78	.34	.25
31	0	------	.17	1.9	------	23	------	3.2	------	.78	.37	------
TOTAL	16.09	58.66	6.56	218.62	4,461.7	1,435.4	212.1	115.7	69.2	31.17	14.53	8.43
MEAN	.52	1.95	.21	7.05	159	46.3	7.07	3.73	2.31	1.01	.47	.28
MAX	7.1	15	.73	110	1,380	205	19	4.5	3.1	1.6	.70	.38
MIN	0	0	.17	.17	1.6	5.0	4.6	3.2	1.6	.78	.34	.21
AC-FT	32	116	13	434	8,850	2,850	421	229	137	62	29	17

CAL YR 1972 TOTAL 121.78 MEAN .33 MAX 15 MIN 0 AC-FT 242
WTR YR 1973 TOTAL 6,648.10 MEAN 18.2 MAX 1,380 MIN 0 AC-FT 13,190

PEAK DISCHARGE (BASE, 200 CFS)

DATE	TIME	G.H.	DISCHARGE	DATE	TIME	G.H.	DISCHARGE
1-9	1300	6.30	312	3-20	0730	6.74	254
2-11	1900	9.10	4,000	3-21	1515	6.87	332

NOTE.--No gage-height record Apr. 5 to June 8.

11137400 ALAMO CREEK NEAR NIPOMO, CALIF.

LOCATION.--Lat 35°02'55", long 120°18'05", in Huasna Grant, San Luis Obispo County, on right bank 3.2 miles upstream from mouth, and 10 miles east of Nipomo.

DRAINAGE AREA.--83.3 sq mi.

PERIOD OF RECORD.--March 1959 to current year.

GAGE.--Water-stage recorder. Altitude of gage is 650 ft (from topographic map). Prior to Oct. 1, 1966, at datum 2.00 ft higher.

AVERAGE DISCHARGE.--14 years, 8.74 cfs (6,330 acre-ft per year).

EXTREMES.--Current year: Maximum discharge, 1,730 cfs Feb. 11 (gage height, 6.42 ft); no flow for several months.
Period of record: Maximum discharge, 9,020 cfs Jan. 25, 1969 (gage height, 10.51 ft), from rating curve extended above 3,100 cfs on basis of slope-area measurement at gage height 10.30 ft; no flow for all or part of each year.

REMARKS.--Records fair. No regulation or diversion above station.

DISCHARGE, IN CUBIC FEET PER SECOND, WATER YEAR OCTOBER 1972 TO SEPTEMBER 1973

DAY	OCT	NOV	DEC	JAN	FEB	MAR	APR	MAY	JUN	JUL	AUG	SEP
1		0	0	0	0	92	18	.36				
2		0	0	0	0	46	16	.34				
3		0	0	0	2.6	31	12	.31				
4		0	0	0	0	31	11	.30				
5		0	0	0	0	22	9.7	.28				
6		0	.94	0	4.1	25	8.5	.26				
7		0	.30	0	1.7	46	6.7	.24				
8		0	0	0	0	83	5.5	.23				
9		0	0	0	0	34	5.2	.21				
10		0	0	0	10	20	4.5	.20				
11		2.5	0	0	450	102	3.8	.19				
12		0	0	0	290	119	3.2	.18				
13		0	0	0	352	69	2.9	.17				
14		4.0	0	0	155	30	2.0	.16				
15		1.7	0	0	71	20	1.4	.15				
16		1.3	0	.88	39	15	1.4	.15				
17		0	0	.72	20	12	1.2	.14				
18		0	0	42	17	9.7	.80	.13				
19		0	0	10	15	9.7	.80	.12				
20		0	0	1.5	13	240	.70	.11				
21		0	0	.20	12	235	.80	.10				
22		0	0	.02	11	230	.70	.07				
23		0	0	0	10	123	.70	.04				
24		0	0	0	20	90	.60	0				
25		0	0	0	8.6	70	.56	0				
26		0	0	0	7.6	52	.52	0				
27		0	0	0	10	42	.48	0				
28		0	0	0	155	33	.45	0				
29		0	0	0	------	30	.42	0				
30		0	0	0	------	25	.38	0				
31		------	0	0	------	21	------	0	------			------
TOTAL	0	9.5	1.24	55.32	1,674.6	2,007.4	120.91	4.44	0	0	0	0
MEAN	0	.32	.040	1.78	59.8	64.8	4.03	.14	0	0	0	0
MAX	0	4.0	.94	42	450	240	18	.36	0	0	0	0
MIN	0	0	0	0	0	9.7	.38	0	0	0	0	0
AC-FT	0	19	2.5	110	3,320	3,980	240	8.8	0	0	0	0

CAL YR 1972 TOTAL 10.74 MEAN .02 MAX 4.0 MIN 0 AC-FT 21
WTR YR 1973 TOTAL 3,873.41 MEAN 10.6 MAX 450 MIN 0 AC-FT 7,680

PEAK DISCHARGE (BASE, 50 CFS)

DATE	TIME	G.H.	DISCHARGE	DATE	TIME	G.H.	DISCHARGE
1-18	2100	3.90	285	3-11	1800	4.90	175
2-11	unknown	6.42	1,730	3-20	0800	5.50	600
2-28	1045	5.06	278	3-21	2145	5.30	440
3-08	1530	4.80	126				

NOTE.--No gage-height record Feb. 8-12, Apr. 25 to May 17.

11137900 HUASNA RIVER NEAR ARROYO GRANDE, CALIF.

LOCATION.--Lat 35°04'40", long 120°22'15", in Huasna Grant, San Luis Obispo County, on right bank 300 ft downstream from Huasna Creek, and 12 miles southeast of Arroyo Grande.

DRAINAGE AREA.--103 sq mi.

PERIOD OF RECORD.--June 1959 to current year.

GAGE.--Water-stage recorder. Altitude of gage is 640 ft (from topographic map).

AVERAGE DISCHARGE.--14 years, 19.8 cfs (14,350 acre-ft per year).

EXTREMES.--Current year: Maximum discharge, 1,390 cfs Feb. 11 (gage height, 6.3 ft, from floodmark); no flow many days.
Period of record: Maximum discharge, 21,000 cfs Jan. 25, 1969 (gage height, 15.90 ft), from rating curve extended above 1,300 cfs on basis of slope-area measurement of maximum flow; no flow many days in most years.

REMARKS.--Records fair except those for periods of no gage-height record, which are poor. No regulation above station. Some diversions by pumping for irrigation above station.

DISCHARGE, IN CUBIC FEET PER SECOND, WATER YEAR OCTOBER 1972 TO SEPTEMBER 1973

DAY	OCT	NOV	DEC	JAN	FEB	MAR	APR	MAY	JUN	JUL	AUG	SEP
1	0	0	.04	.05	.64	331	37	6.2	2.0	.99	.51	.17
2	0	0	.04	.05	.64	179	34	6.0	2.0	.97	.50	.17
3	0	0	.05	.05	.64	103	32	5.7	1.9	.94	.47	.17
4	0	.01	.06	.05	.87	87	29	5.4	1.9	.92	.43	.18
5	0	.01	.05	.05	.87	66	28	5.2	1.9	.90	.40	.18
6	0	.01	.09	.05	2.4	66	25	5.0	1.8	.89	.37	.19
7	0	.01	.12	.06	29	71	20	4.8	1.8	.87	.34	.20
8	0	.02	.06	.06	42	84	18	4.5	1.7	.85	.31	.21
9	0	.02	.06	.24	20	64	17	4.4	1.7	.84	.29	.22
10	0	.02	.05	.24	80	49	16	4.2	1.6	.83	.28	.23
11	0	.03	.05	.12	880	84	16	4.0	1.6	.81	.27	.24
12	0	.03	.05	.09	450	66	15	3.8	1.5	.79	.26	.25
13	0	.02	.06	.09	650	48	14	3.6	1.5	.77	.25	.26
14	0	.12	.05	.09	295	37	13	3.4	1.4	.76	.23	.27
15	0	.03	.06	.09	332	32	12	3.3	1.4	.75	.22	.28
16	0	.04	.06	.64	276	24	12	3.2	1.4	.74	.21	.29
17	0	.04	.06	.79	175	20	11	3.1	1.3	.72	.20	.30
18	0	.03	.06	49	145	16	11	3.0	1.3	.70	.19	.31
19	.01	.03	.09	99	110	15	10	2.9	1.3	.69	.18	.32
20	.01	.03	.06	15	90	200	9.6	2.8	1.2	.68	.18	.33
21	.01	.03	.06	5.2	70	170	9.4	2.8	1.2	.67	.18	.34
22	.01	.03	.06	3.2	50	140	9.0	2.7	1.2	.66	.18	.35
23	.01	.03	.06	2.1	35	120	8.6	2.7	1.1	.65	.18	.36
24	.01	.03	.06	1.5	36	100	8.2	2.6	1.1	.63	.17	.37
25	.01	.04	.06	1.1	30	90	8.0	2.5	1.1	.62	.17	.38
26	.01	.05	.05	.52	30	82	7.6	2.5	1.1	.61	.17	.39
27	.01	.05	.06	.51	144	74	7.4	2.4	1.1	.60	.17	.40
28	.01	.05	.06	.51	401	72	7.0	2.3	1.0	.58	.17	.41
29	.01	.05	.06	.64	------	56	6.6	2.3	1.0	.56	.17	.41
30	.01	.05	.06	.71	------	48	6.4	2.2	1.0	.54	.17	.42
31	.01	------	.06	.64	------	42	------	2.1	------	.52	.17	------
TOTAL	.13	.91	1.87	182.44	4,376.06	2,636	457.8	111.6	43.1	23.05	7.99	8.60
MEAN	.004	.030	.060	5.89	156	85.0	15.3	3.60	1.44	.74	.26	.29
MAX	.01	.12	.12	99	880	331	37	6.2	2.0	.99	.51	.42
MIN	0	0	.04	.05	.64	15	6.4	2.1	1.0	.52	.17	.17
AC-FT	.3	1.8	3.7	362	8,680	5,230	908	221	85	46	16	17

CAL YR 1972 TOTAL 27.47 MEAN .07 MAX .45 MIN 0 AC-FT 54
WTR YR 1973 TOTAL 7,849.55 MEAN 21.5 MAX 880 MIN 0 AC-FT 15,570

PEAK DISCHARGE (BASE, 40 CFS)

DATE	TIME	G.H.	DISCHARGE	DATE	TIME	G.H.	DISCHARGE
1-18	1330	4.56	107	3-2	0100	5.26	443
2-7	2245	4.50	68	3-6	2330	4.45	89
2-11	unknown	6.3	1,390	3-8	1315	4.58	120
2-27	2230	5.25	436	3-11	1215	4.63	133
2-28	1800	5.31	478	3-20	unknown	--	unknown

NOTE.--No gage-height record Feb. 10-Feb. 23, Apr. 6 to May 17, June 21 to Sept. 30.

11138100 CUYAMA RIVER BELOW TWITCHELL DAM, CALIF.

LOCATION.--Lat 34°56'40", long 120°17'30", in Suey Grant, Santa Barbara County, on left bank 3.5 miles upstream from mouth, 4 miles northeast of Garey, and 4.4 miles downstream from Twitchell Dam.

DRAINAGE AREA.--1,132 sq mi.

PERIOD OF RECORD.--October 1958 to current year.

GAGE.--Water-stage recorder. Datum of gage is 401.94 ft above mean sea level (Bureau of Reclamation bench mark).

EXTREMES.--Current year: Maximum discharge, 9,100 cfs June 13 (gage height, 8.22), result of sluicing at dam; no flow most of year.
Period of record: Maximum discharge, 9,100 cfs June 13, 1973 (gage height, 8.22 ft), result of sluicing at dam; no flow at times in each year.

REMARKS.--Records good except those for period of no gage-height record, which are poor. Flow regulated since February 1959 by Twitchell Reservoir (capacity, 240,000 acre-ft). Controlled releases are for ground-water recharge in Santa Maria Valley. Some pumping from wells along stream for irrigation above station.

DISCHARGE, IN CUBIC FEET PER SECOND, WATER YEAR OCTOBER 1972 TO SEPTEMBER 1973

DAY	OCT	NOV	DEC	JAN	FEB	MAR	APR	MAY	JUN	JUL	AUG	SEP
1		0		0	0	4.2	4.2	.99	.11	202	195	177
2		0		0	0	3.4	3.9	.99	.11	228	194	177
3		0		0	0	3.2	3.7	.99	.14	229	195	181
4		0		0	0	2.9	3.7	.89	.18	232	194	184
5		0		0	5.0	2.9	3.7	.99	.78	232	192	184
6		0		0	5.8	3.2	3.9	.89	.07	231	191	185
7		0		0	16	3.2	4.2	.89	.05	232	192	183
8		0		0	8.0	4.8	3.9	.68	.05	235	190	184
9		0		0	3.5	4.8	3.7	.59	.05	235	188	187
10		0		0	10	4.2	3.7	.45	.05	235	192	189
11		.07		0	90	7.3	3.7	.27	.05	234	192	190
12		0		0	35	6.5	3.4	.27	440	233	191	188
13		0		0	16	5.1	3.2	.38	602	234	188	191
14		.25		0	11	4.8	3.2	.51	56	233	191	192
15		.45		0	7.0	4.2	2.9	.78	75	230	188	195
16		.90		1.0	5.6	4.2	2.7	.59	13	229	186	198
17		.60		8.0	4.5	3.9	2.7	.45	4.2	225	189	195
18		.20		19	3.7	3.9	2.7	.38	26	229	188	195
19		0		12	3.4	3.7	2.4	.32	42	226	187	198
20		0		5.5	3.0	3.7	2.2	.27	36	222	185	199
21		0		4.2	2.8	3.9	2.2	.27	33	221	187	201
22		0		3.3	2.7	4.2	2.0	.23	49	220	183	204
23		0		2.3	2.7	5.1	1.7	.18	9.7	221	178	202
24		0		1.2	2.7	4.8	1.7	.14	4.1	219	179	205
25		0		.10	2.4	4.8	1.7	.14	13	215	178	208
26		0		0	2.4	4.8	1.7	.14	54	209	176	209
27		0		0	2.7	4.8	1.6	.14	185	209	173	211
28		0		0	5.8	4.8	1.4	.09	188	204	176	209
29		0		0	------	4.5	1.3	.09	191	201	173	213
30		0		0	------	4.5	.99	.07	193	198	176	213
31		------		0	------	4.2	------	.09	------	198	177	------
TOTAL	0	2.47	0	56.60	251.7	134.5	83.99	14.15	2,215.64	6,901	5,764	5,847
MEAN	0	.082	0	1.83	8.99	4.34	2.80	.46	73.9	223	186	195
MAX	0	.90	0	19	90	7.3	4.2	.99	602	235	195	213
MIN	0	0	0	0	0	2.9	.99	.07	.05	198	173	177
AC-FT	0	4.9	0	112	499	267	167	28	4,390	13,690	11,430	11,600

CAL YR 1972 TOTAL 2.47 MEAN .00 MAX .90 MIN 0 AC-FT 4
WTR YR 1973 TOTAL 21,271.05 MEAN 58.3 MAX 602 MIN 0 AC-FT 42,190

NOTE.--No gage-height record Oct. 1 to Feb. 21.

11138500 SISQUOC RIVER NEAR SISQUOC, CALIF.

LOCATION.--Lat 34°50'23", long 120°10'02", in Sisquoc Grant, Santa Barbara County, on left bank 2.6 miles upstream from La Brea Creek, and 7 miles east of Sisquoc.

DRAINAGE AREA.--281 sq mi.

PERIOD OF RECORD.--October 1943 to current year. October 1929 to September 1933, at site 0.2 mile downstream; low-flow records not equivalent owing to diversion immediately upstream. Monthly discharge only for some periods, published in WSP 1315-B.

GAGE.--Water-stage recorder. Datum of gage is 624.30 ft above mean sea level (Corps of Engineers bench mark). See WSP 1735 for history of changes prior to Aug. 24, 1951.

AVERAGE DISCHARGE.--30 years, 42.0 cfs (30,430 acre-ft per year).

EXTREMES.--Current year: Maximum discharge, 4,500 cfs Feb. 11 (gage height, 7.68 ft); minimum daily, 0.91 cfs Oct. 16.

Period of record: Maximum discharge, 23,200 cfs Dec. 6, 1966 (gage height, 15.75 ft), from rating curve extended above 1,700 cfs on basis of slope-area measurements at gage heights 10.08 and 15.75 ft; no flow Nov. 11-18, 1967.

Flood of Mar. 2, 1938, 11,000 cfs (gage height, 8.1 ft, from high-water mark in gage well, at site in use 1929-33), from rating curve extended above 2,800 cfs.

REMARKS.--Records fair except those for periods of indefinite stage-discharge relation, which are poor. No regulation or diversion above station.

DISCHARGE, IN CUBIC FEET PER SECOND, WATER YEAR OCTOBER 1972 TO SEPTEMBER 1973

DAY	OCT	NOV	DEC	JAN	FEB	MAR	APR	MAY	JUN	JUL	AUG	SEP
1	1.0	1.5	2.6	2.2	20	350	147	49	16	6.4	2.5	1.5
2	1.0	1.5	2.6	2.2	19	236	141	48	15	6.2	2.4	1.5
3	1.1	1.5	2.6	2.2	20	193	132	46	15	6.0	2.4	1.5
4	1.1	2.0	2.8	2.0	58	183	126	44	14	5.8	2.3	1.5
5	1.0	2.0	2.7	2.2	123	169	120	43	14	5.6	2.3	1.4
6	1.0	1.8	3.2	2.0	176	162	117	41	14	5.4	2.2	1.4
7	1.0	1.8	3.5	2.0	833	183	117	40	13	5.2	2.2	1.4
8	.96	1.8	5.5	2.0	462	186	117	38	13	5.0	2.2	1.4
9	1.0	1.8	4.6	2.2	260	193	114	37	13	4.8	2.1	1.4
10	1.0	2.0	3.9	2.6	413	176	108	35	12	4.7	2.1	1.4
11	1.0	3.2	3.4	3.0	2,140	201	103	34	12	4.6	2.1	1.3
12	.94	5.9	3.2	3.0	889	195	98	33	12	4.5	2.0	1.3
13	.96	4.0	3.0	3.2	700	168	98	32	11	4.3	2.0	1.3
14	.97	41	2.8	3.2	574	160	92	31	11	4.2	2.0	1.3
15	1.0	30	2.8	3.4	450	148	90	30	11	4.0	1.9	1.3
16	.91	22	2.7	70	360	140	86	28	10	3.9	1.9	1.3
17	.96	95	2.5	365	300	136	84	27	10	3.8	1.9	1.3
18	13	33	2.2	468	240	130	80	25	9.8	3.7	1.9	1.3
19	34	15	2.2	721	200	127	78	23	9.7	3.5	1.8	1.2
20	4.4	8.8	2.2	201	160	345	75	22	9.6	3.4	1.8	1.2
21	3.2	6.7	2.2	101	140	284	72	21	9.0	3.3	1.8	1.2
22	2.7	5.1	2.3	71	124	353	68	21	8.9	3.1	1.7	1.2
23	2.2	4.4	2.4	52	110	262	66	20	8.5	3.0	1.7	1.2
24	1.8	3.7	2.2	45	109	251	64	19	8.0	2.8	1.7	1.2
25	1.6	3.2	2.2	40	114	245	62	18	7.8	2.8	1.6	1.2
26	1.4	2.9	2.2	38	101	226	60	18	7.6	2.7	1.6	1.2
27	1.4	2.8	2.2	32	106	209	58	18	7.4	2.6	1.6	1.1
28	1.5	2.6	2.2	28	870	190	56	17	7.0	2.6	1.5	1.1
29	1.5	2.5	2.2	25	------	176	54	17	6.8	2.6	1.5	1.1
30	1.5	2.5	2.2	23	------	165	51	16	6.6	2.5	1.5	1.1
31	1.6	------	2.2	21	------	153	------	16	------	2.5	1.5	------
TOTAL	88.70	312.0	85.5	2,338.4	10,071	6,295	2,734	907	322.7	125.5	59.7	38.8
MEAN	2.86	10.4	2.76	75.4	360	203	91.1	29.3	10.8	4.05	1.93	1.29
MAX	34	95	5.5	721	2,140	353	147	49	16	6.4	2.5	1.5
MIN	.91	1.5	2.2	2.0	19	127	51	16	6.6	2.5	1.5	1.1
AC-FT	176	619	170	4,640	19,980	12,490	5,420	1,800	640	249	118	77

CAL YR 1972 TOTAL 1,767.25 MEAN 4.83 MAX 95 MIN .40 AC-FT 3,510
WTR YR 1973 TOTAL 23,378.30 MEAN 64.1 MAX 2,140 MIN .91 AC-FT 46,370

PEAK DISCHARGE (BASE, 100 CFS)

DATE	TIME	G.H.	DISCHARGE	DATE	TIME	G.H.	DISCHARGE
11-14	1545	3.54	183	2-11	0745	7.68	4,500
1-16	2345	4.80	1,470	2-28	0245	4.19	1,250
1-18	2145	5.94	2,640	3-20	0715	3.36	581
2-7	0115	4.12	1,090	3-22	0500	3.13	420

NOTE.--Stage-discharge relation indefinite Oct. 17, 18, Apr. 3 to Sept. 30.

11139000 LA BREA CREEK NEAR SISQUOC, CALIF.

LOCATION.--Lat 34°51'10", long 120°11'55", in SE¼ sec.13, T.9 N., R.32 W., Santa Barbara County, on right bank 2,100 ft upstream from mouth, and 5.5 miles east of Sisquoc.

DRAINAGE AREA.--93.6 sq mi.

PERIOD OF RECORD.--October 1943 to September 1973 (discontinued).

GAGE.--Water-stage recorder. Altitude of gage is 550 ft (from topographic map).

AVERAGE DISCHARGE.--30 years, 6.81 cfs (4,930 acre-ft per year).

EXTREMES.--Current year: Maximum discharge, 1,240 cfs Feb. 11 (gage height, 3.80 ft); no flow for several months. Period of record: Maximum discharge, 11,200 cfs Dec. 6, 1966 (gage height, 8.23 ft), from rating curve extended above 2,000 cfs on basis of slope-area measurement of maximum flow; no flow most of each year.

REMARKS.--Records fair. Perennial low flow from basin above sinks beneath streambed before reaching station. No regulation or diversion above station.

DISCHARGE, IN CUBIC FEET PER SECOND, WATER YEAR OCTOBER 1972 TO SEPTEMBER 1973

DAY	OCT	NOV	DEC	JAN	FEB	MAR	APR	MAY	JUN	JUL	AUG	SEP
1		0	0	.03	.13	17	19	.90	.04			
2		0	0	.04	.17	13	17	.80	.04			
3		0	0	.03	.44	10	15	.75	.03			
4		0	.37	.04	1.2	13	12	.70	.02			
5		0	.13	0	1.2	11	11	.64	.02			
6		0	.17	0	2.3	12	9.5	.58	.02			
7		0	.17	0	13	21	8.2	.54	.01			
8		0	.13	.03	21	27	7.0	.50	.01			
9		0	.13	.35	15	27	6.4	.47	.01			
10		0	.10	.10	33	22	5.9	.45	.01			
11		0	.13	.02	528	34	5.5	.42	.01			
12		0	.13	0	130	33	5.0	.40	.01			
13		0	.07	0	222	24	4.5	.38	.01			
14		0	.07	0	128	19	4.0	.36	.01			
15		0	.05	0	75	17	3.7	.34	0			
16		0	.02	.22	45	13	3.3	.33	0			
17		0	.02	.04	30	12	3.0	.32	0			
18		0	.02	7.1	22	10	2.7	.28	0			
19		0	0	44	16	8.8	2.5	.26	0			
20		.02	0	4.4	14	52	2.3	.24	0			
21		.03	0	2.3	13	68	2.1	.22	0			
22		0	.02	.86	11	120	1.9	.20	0			
23		0	0	.35	8.8	95	1.7	.17	0			
24		0	0	.22	8.8	66	1.6	.16	0			
25		0	0	.17	7.0	51	1.5	.14	0			
26		0	.03	.22	5.9	42	1.4	.12	0			
27		0	.02	.13	7.6	37	1.2	.10	0			
28		0	.04	.10	23	34	1.1	.09	0			
29		0	.05	.07	------	28	1.0	.07	0			
30		0	.03	.07	------	24	.95	.06	0			
31		------	.05	.07	------	21	------	.05	------			------
TOTAL	0	.05	1.95	60.96	1,382.54	981.8	161.95	11.04	.25	0	0	0
MEAN	0	.002	.063	1.97	49.4	31.7	5.40	.36	.008	0	0	0
MAX	0	.03	.37	44	528	120	19	.90	.04	0	0	0
MIN	0	0	0	0	.13	8.8	.95	.05	0	0	0	0
AC-FT	0	.10	3.9	121	2,740	1,950	321	22	.5	0	0	0

CAL YR 1972 TOTAL 2.00 MEAN .00 MAX .37 MIN 0 AC-FT 4
WTR YR 1973 TOTAL 2,600.54 MEAN 7.12 MAX 528 MIN 0 AC-FT 5,160

PEAK DISCHARGE (BASE, 30 CFS)

DATE	TIME	G.H.	DISCHARGE	DATE	TIME	G.H.	DISCHARGE
1-18	2400	1.88	111	3-20	1030	2.26	75
2-11	1245	3.80	1,240	3-22	0030	2.52	132
2-13	0445	3.29	284				

11139350 FOXEN CREEK NEAR SISQUOC, CALIF.

LOCATION.--Lat 34°48'58", long 120°13'26", in La Laguna Grant, Santa Barbara County, on left upstream wingwall of culvert on Foxen Canyon Road, 3.0 miles upstream from mouth, and 3.7 miles southeast of Sisquoc.

DRAINAGE AREA.--16.8 sq mi.

PERIOD OF RECORD.--September 1965 to September 1973 (discontinued).

GAGE.--Water-stage recorder. Altitude of gage is 650 ft (from topographic map).

AVERAGE DISCHARGE.--8 years, 0.47 cfs (341 acre-ft per year).

EXTREMES.--Current year: Maximum discharge, 230 cfs Jan. 18 (gage height, 4.58 ft), from rating curve extended as explained below; minimum daily, 0.01 cfs on several days.
Period of record: Maximum discharge, 271 cfs Feb. 26, 1969 (gage height, 4.91 ft), from rating curve extended above 24 cfs on basis of slope-conveyance measurement of maximum flow; no flow many days in most years.

REMARKS.--Records good. Small diversion dam for irrigation of about 160 acres above gage. Some pumping from wells along stream above gage.

DISCHARGE, IN CUBIC FEET PER SECOND, WATER YEAR OCTOBER 1972 TO SEPTEMBER 1973

DAY	OCT	NOV	DEC	JAN	FEB	MAR	APR	MAY	JUN	JUL	AUG	SEP
1	.04	.12	.17	.11	.22	.34	.28	.08	.11	.02	.02	.03
2	.04	.12	.18	.11	.21	.34	.23	.08	.11	.03	.02	.03
3	.04	.12	.18	.11	.38	.34	.25	.08	.08	.02	.02	.03
4	.04	.18	.25	.11	1.1	.48	.24	.08	.11	.02	.02	.04
5	.03	.13	.18	.11	.23	.34	.26	.08	.08	.02	.03	.04
6	.02	.13	.22	.11	.89	2.1	.28	.09	.08	.02	.03	.03
7	.01	.14	.20	.11	.55	.48	.27	.10	.08	.02	.04	.03
8	.02	.14	.19	.11	.29	3.8	.27	.09	.06	.02	.04	.03
9	.02	.13	.14	.18	.28	.34	.21	.09	.06	.02	.04	.03
10	.02	.18	.14	.14	2.3	.34	.21	.10	.06	.01	.04	.03
11	.02	.49	.14	.11	32	3.8	.18	.10	.06	.01	.04	.03
12	.02	.21	.14	.11	5.2	.88	.18	.13	.06	.01	.03	.03
13	.02	.25	.14	.11	4.0	.41	.18	.14	.08	.01	.03	.03
14	.02	4.5	.14	.11	2.5	.34	.18	.16	.08	.01	.03	.03
15	.02	.39	.14	.11	1.5	.34	.18	.08	.08	.01	.03	.05
16	.02	5.0	.14	.48	.60	.34	.14	.08	.08	.01	.03	.06
17	.02	.37	.14	.22	.35	.34	.14	.09	.07	.01	.03	.05
18	2.2	.25	.14	19	.30	.34	.14	.08	.07	.02	.02	.05
19	.88	.21	.14	8.0	.26	.41	.15	.11	.06	.02	.02	.05
20	.22	.21	.14	4.0	.25	10	.16	.11	.04	.02	.02	.04
21	.18	.20	.11	1.5	.25	6.1	.16	.11	.03	.02	.02	.04
22	.14	.20	.11	.50	.25	1.2	.16	.11	.03	.02	.02	.04
23	.14	.18	.11	.30	.25	.83	.17	.11	.03	.02	.03	.04
24	.14	.18	.10	.25	.25	.66	.13	.11	.03	.01	.03	.04
25	.12	.18	.09	.23	.22	.48	.10	.11	.03	.01	.04	.04
26	.12	.17	.10	.22	.22	.36	.10	.11	.03	.01	.04	.03
27	.13	.17	.11	.22	1.0	.35	.11	.11	.02	.02	.04	.03
28	.12	.17	.11	.22	3.1	.31	.11	.08	.01	.02	.03	.03
29	.12	.17	.11	.22	------	.28	.11	.08	.02	.02	.03	.04
30	.11	.18	.11	.23	------	.28	.11	.11	.03	.02	.04	.04
31	.11	------	.11	.22	------	.29	------	.11	------	.02	.04	------
TOTAL	5.15	15.07	4.42	37.56	58.95	37.24	5.39	3.10	1.77	.52	.94	1.11
MEAN	.17	.50	.14	1.21	2.11	1.20	.18	.10	.059	.017	.030	.037
MAX	2.2	5.0	.25	19	32	10	.28	.16	.11	.03	.04	.06
MIN	.01	.12	.09	.11	.21	.28	.10	.08	.01	.01	.02	.03
AC-FT	10	30	8.8	75	117	74	11	6.1	3.5	1.0	1.9	2.2

CAL YR 1972 TOTAL 43.47 MEAN .12 MAX 5.0 MIN .01 AC-FT 86
WTR YR 1973 TOTAL 171.22 MEAN .47 MAX 32 MIN .01 AC-FT 340

PEAK DISCHARGE (BASE, 15 CFS)

DATE	TIME	G.H.	DISCHARGE	DATE	TIME	G.H.	DISCHARGE
10-18	2115	1.88	28	2-28	0100	1.57	16
11-14	1015	1.94	31	3-6	1900	1.56	15
11-16	0345	1.94	31	3-8	0815	1.71	21
1-18	1515	4.58	230	3-11	0745	1.64	18
2-11	1000	3.22	105	3-20	0315	2.36	51
2-12	0200	1.72	22	3-21	1800	1.78	24

11139500 TEPUSQUET CREEK NEAR SISQUOC, CALIF.

LOCATION.--Lat 34°52'21", long 120°14'37", in NE¼ sec.9, T.9 N., R.32 W., Santa Barbara County, on downstream wingwall of right bridge abutment, 1.1 miles upstream from mouth, and 3 miles east of Sisquoc.

DRAINAGE AREA.--28.7 sq mi.

PERIOD OF RECORD.--October 1943 to current year.

GAGE.--Water-stage recorder. Concrete control since July 1957. Altitude of gage is 500 ft (from topographic map). Prior to Dec. 9, 1948, at datum 0.9 ft higher.

AVERAGE DISCHARGE.--30 years, 1.56 cfs (1,130 acre-ft per year).

EXTREMES.--Current year: Maximum discharge, 444 cfs Feb. 11 (gage height, 4.28 ft); no flow at times.
Period of record: Maximum discharge, 788 cfs Dec. 6, 1966 (gage height, 5.48 ft), from rating curve extended above 220 cfs on basis of computation of maximum flow at contracted opening; no flow at times in some years.

REMARKS.--Records fair. No regulation above station. Some diversion by pumping from wells along stream to irrigate about 100 acres above gage.

DISCHARGE, IN CUBIC FEET PER SECOND, WATER YEAR OCTOBER 1972 TO SEPTEMBER 1973

DAY	OCT	NOV	DEC	JAN	FEB	MAR	APR	MAY	JUN	JUL	AUG	SEP
1	0	.14	.25	.35	.62	4.4	8.2	1.3	.90	.82	.39	.12
2	0	.14	.25	.35	.66	1.6	9.1	1.3	.90	.80	.38	.12
3	.01	.14	.25	.35	.68	1.6	8.2	1.2	1.1	.78	.37	.12
4	.01	.19	.35	.35	.72	1.6	7.3	1.2	1.1	.76	.36	.12
5	.01	.19	.25	.35	.80	.90	6.4	1.2	1.1	.74	.35	.12
6	0	.19	.35	.35	.59	4.4	5.1	1.2	1.1	.72	.34	.12
7	0	.19	.45	.35	3.7	2.7	4.4	1.2	1.1	.70	.30	.12
8	0	.19	.35	.45	3.2	9.1	4.4	1.2	1.1	.68	.28	.12
9	0	.14	.19	2.7	1.3	8.2	4.4	1.1	1.1	.66	.26	.12
10	.01	.19	.19	.90	65	7.3	2.4	1.1	1.1	.64	.25	.12
11	.02	4.4	.19	.45	252	26	2.3	1.1	1.1	.62	.23	.12
12	.02	.45	.19	.45	124	14	2.1	1.1	1.1	.60	.21	.12
13	.03	.35	.19	.45	170	4.4	2.0	1.1	1.0	.58	.20	.12
14	.03	11	.19	.35	68	1.9	1.9	1.1	1.0	.57	.19	.12
15	.04	14	.19	.35	10	.74	1.8	1.1	1.0	.56	.18	.13
16	.05	11	.14	6.4	7.0	.35	1.7	1.1	1.0	.55	.17	.13
17	.09	3.2	.09	3.7	5.0	.45	1.7	1.1	1.0	.54	.16	.13
18	2.9	1.9	.09	65	4.0	.35	1.6	1.1	1.0	.52	.15	.13
19	.45	1.9	.14	11	3.5	.90	1.6	.90	1.0	.50	.15	.13
20	.25	.90	.14	3.0	3.0	93	1.5	.90	1.0	.49	.14	.13
21	.19	.59	.14	1.0	2.9	58	1.5	.90	1.0	.48	.14	.13
22	.19	.59	.14	.60	2.8	58	1.5	.59	.95	.47	.13	.13
23	.19	.59	.09	.50	1.9	35	1.4	.59	.95	.47	.13	.13
24	.14	.25	.14	.44	1.9	20	1.4	.59	.95	.46	.13	.13
25	.14	.25	.25	.59	1.6	10	1.4	.74	.95	.45	.12	.13
26	.14	.25	.25	.59	1.3	9.0	1.4	.74	.90	.44	.12	.14
27	.19	.14	.19	.45	6.4	8.0	1.3	.59	.90	.44	.12	.14
28	.19	.25	.25	.45	23	8.2	1.3	.59	.88	.43	.12	.14
29	.14	.19	.25	.45	------	7.3	1.3	.74	.87	.43	.12	.14
30	.14	.19	.25	.45	------	7.3	1.3	.74	.85	.42	.12	.14
31	.14	------	.35	.45	------	7.3	------	1.1	------	.40	.12	------
TOTAL	5.71	54.09	6.73	103.62	765.57	411.99	91.9	30.51	30.00	17.72	6.43	3.81
MEAN	.18	1.80	.22	3.34	27.3	13.3	3.06	.98	1.00	.57	.21	.13
MAX	2.9	14	.45	65	252	93	9.1	1.3	1.1	.82	.39	.14
MIN	0	.14	.09	.35	.59	.35	1.3	.59	.85	.40	.12	.12
AC-FT	11	107	13	206	1,520	817	182	61	60	35	13	7.6

CAL YR 1972 TOTAL 107.00 MEAN .29 MAX 14 MIN 0 AC-FT 212
WTR YR 1973 TOTAL 1,528.08 MEAN 4.19 MAX 252 MIN 0 AC-FT 3,030

PEAK DISCHARGE (BASE, 50 CFS)

DATE	TIME	G.H.	DISCHARGE	DATE	TIME	G.H.	DISCHARGE
11-14	0645	3.16	137	2-13	0400	3.48	218
11-15	2315	3.48	218	3-11	1730	3.00	96
1-18	1345	3.44	208	3-20	0245	3.18	142
2-10	1715	3.29	170	3-21	1745	3.28	167
2-11	0545	4.28	444				

NOTE.--Stage-discharge relation indefinite Apr. 11 to May 17.

11140000 SISQUOC RIVER NEAR GAREY, CALIF.

LOCATION.--Lat 34°53'38", long 120°18'20", in SW¼ sec.36, T.10 N., R.33 W., Santa Barbara County, on downstream side of county road bridge, 0.6 mile northeast of Garey, and 3.7 miles downstream from Tepusquet Creek.

DRAINAGE AREA.--471 sq mi.

PERIOD OF RECORD.--October 1940 to current year. Records for water year 1941 incomplete, yearly estimate and monthly discharge only for October 1940 and January 1941, published in WSP 1315-B.

GAGE.--Water-stage recorder. Datum of gage is 354.8 ft above mean sea level (Santa Barbara County bench mark). See WSP 1735 for history of changes prior to Oct. 1, 1959. Oct. 1, 1959, to Dec. 30, 1965, at datum 6.00 ft higher. Since Oct. 1, 1959, supplementary gage near left bank at same datum.

AVERAGE DISCHARGE.--33 years, 41.4 cfs (29,990 acre-ft per year).

EXTREMES.--Current year: Maximum discharge, 10,400 cfs Feb. 11 (gage height, 10.22 ft); no flow most of year. Period of record: Maximum discharge, 24,500 cfs Jan. 25, 1969 (gage height, 13.00 ft); no flow for several months in each year.

REMARKS.--Records fair except those for periods of no gage-height record or indefinite stage-discharge relation, which are poor. No regulation above station. Pumping from wells along stream for irrigation of about 7,000 acres above station.

DISCHARGE, IN CUBIC FEET PER SECOND, WATER YEAR OCTOBER 1972 TO SEPTEMBER 1973

DAY	OCT	NOV	DEC	JAN	FEB	MAR	APR	MAY	JUN	JUL	AUG	SEP
1		0		0	0	225	120					
2		0		0	0	204	100					
3		0		0	0	159	85					
4		0		0	18	159	70					
5		0		0	225	135	60					
6		0		0	247	133	50					
7		0		0	714	155	40					
8		0		0	247	186	30					
9		0		.50	149	158	23					
10		0		0	282	110	17					
11		3.3		0	3,650	194	10					
12		0		0	1,260	150	5.0					
13		0		0	772	137	2.5					
14		11		0	374	126	.10					
15		22		0	302	120	0					
16		41		41	193	115	0					
17		26		233	146	110	0					
18		8.3		588	116	105	0					
19		.02		859	100	105	0					
20		0		247	80	300	0					
21		0		197	65	250	0					
22		0		159	55	290	0					
23		0		113	41	270	0					
24		0		54	38	250	0					
25		0		0	44	230	0					
26		0		0	39	210	0					
27		0		0	48	190	0					
28		0		0	580	180	0					
29		0		0	------	165	0					
30		0		0	------	150	0					
31		------		0	------	140	------		------			------
TOTAL	0	111.62	0	2,491.50	9,785	5,411	612.60	0	0	0	0	0
MEAN	0	3.72	0	80.4	349	175	20.4	0	0	0	0	0
MAX	0	41	0	859	3,650	300	120	0	0	0	0	0
MIN	0	0	0	0	0	105	0	0	0	0	0	0
AC-FT	0	221	0	4,940	19,410	10,730	1,220	0	0	0	0	0

CAL YR 1972 TOTAL 111.66 MEAN .31 MAX 41 MIN 0 AC-FT 221
WTR YR 1973 TOTAL 18,411.72 MEAN 50.4 MAX 3,650 MIN 0 AC-FT 36,520

PEAK DISCHARGE (BASE, 100 CFS)

DATE	TIME	G.H.	DISCHARGE	DATE	TIME	G.H.	DISCHARGE
11-14	0745	4.21	204	2-11	1000	10.22	10,400
11-15	2315	4.93	598	2-28	0415	5.98	1,480
1-16	1530	4.74	490	3-6	1730	4.77	263
1-17	0445	5.94	1,440	3-8	0645	4.76	259
1-18	2400	8.23	5,010	3-11	1930	4.98	420
2-7	0430	5.08	1,180	3-20	unknown	--	about 600

NOTE.--No gage-height record Feb. 14, Feb. 20-22, Mar. 14-28 and stage-discharge relation indefinite Mar. 29 to Apr. 15.

11140600 BRADLEY DITCH NEAR DONOVAN ROAD, AT SANTA MARIA, CALIF.

LOCATION.--Lat 34°58'00", long 120°25'00", in NE¼NE¼NE¼ sec.11, T.10 N., R.34 W., Santa Barbara County, on left bank 250 ft south of Donovan Road, and 0.2 mile east of U.S. Highway 101, Santa Maria.

PERIOD OF RECORD.--October 1970 to current year.

GAGE.--Water-stage recorder. Concrete-lined channel. Altitude of gage is 225 ft (from topographic map).

EXTREMES.--Current year: Maximum discharge, 251 cfs Jan. 18 (gage height, 4.52 ft), from rating curve based on computation of flow in concrete-lined channel; no flow many days.
Period of record: Maximum discharge, 251 cfs Jan. 18, 1973 (gage height, 4.52 ft), from rating curve based on computation of flow in concrete-lined channel; no flow for several days in each year.

REMARKS.--Records poor. Runoff affected by urbanization.

DISCHARGE, IN CUBIC FEET PER SECOND, WATER YEAR OCTOBER 1972 TO SEPTEMBER 1973

DAY	OCT	NOV	DEC	JAN	FEB	MAR	APR	MAY	JUN	JUL	AUG	SEP
1	0	.74	1.7	0	.02	1.1	.74	.54	.58	.42	.75	1.3
2	0	1.3	1.8	.18	0	.42	.74	.51	.58	.39	.93	1.3
3	.58	1.1	.08	1.2	6.2	1.0	1.4	.59	.58	.35	1.0	1.3
4	.35	2.3	3.0	1.6	2.2	1.2	2.0	.66	.57	.35	1.1	1.4
5	.50	.28	.12	1.9	.12	.08	2.0	.71	.54	.35	1.1	1.4
6	.66	.12	3.5	.92	4.7	4.1	2.5	.70	.50	.35	1.1	1.6
7	1.1	1.7	4.3	.12	3.8	1.3	2.8	.66	.50	.42	1.1	1.6
8	.82	.23	1.3	1.8	.17	26	1.7	.66	.50	.38	1.2	1.6
9	.58	.08	.58	14	.08	1.9	1.2	.66	.50	.35	1.2	1.6
10	1.0	3.8	.10	3.8	36	.28	1.2	.66	.50	.35	1.2	1.3
11	.92	9.4	.02	.50	87	22	1.3	.66	.50	.35	1.2	1.4
12	2.2	.17	0	.03	49	.92	.52	.74	.48	.35	1.3	1.6
13	.82	.12	0	.01	41	.42	.51	.74	.47	.35	1.3	1.8
14	.58	19	0	0	12	.17	.47	.74	.42	.42	1.2	2.0
15	.23	6.8	0	0	2.0	.08	.44	.74	.42	.42	1.2	2.0
16	.35	16	0	23	.40	.08	.42	.74	.42	.42	1.2	1.6
17	1.2	3.0	0	2.5	.04	.04	.42	.72	.41	.39	1.2	1.0
18	.82	.08	0	86	.01	.04	.42	.71	.37	.37	1.2	.88
19	.82	.02	0	5.6	0	3.8	.41	.69	.35	.36	1.2	.95
20	.92	0	0	.17	0	36	.45	.67	.35	.42	1.2	1.0
21	.66	0	0	.02	0	7.9	.42	.66	.35	.51	1.2	1.1
22	.66	0	1.1	0	0	2.3	.42	.66	.35	.58	1.2	1.3
23	2.0	0	1.1	0	0	.30	.42	.66	.42	.58	1.2	1.1
24	1.2	0	.82	0	1.6	.02	.42	.66	.42	.58	1.2	.95
25	.82	0	1.0	0	.28	0	.42	.66	.38	.63	1.2	.94
26	1.7	0	.10	0	1.5	0	.42	.61	.35	.53	1.2	1.0
27	.82	0	.02	.12	6.8	0	.58	.58	.35	.65	1.1	1.1
28	.74	0	0	.08	14	.04	.58	.58	.35	.73	1.1	1.2
29	.58	0	0	.08	------	.04	.58	.58	.35	.80	1.1	1.4
30	1.0	1.2	0	1.7	------	.04	.57	.58	.42	.79	1.1	1.5
31	.08	------	0	.08	------	.02	------	.58	------	.74	1.2	------
TOTAL	24.71	67.44	20.64	145.41	268.92	111.59	26.47	20.31	13.28	14.68	35.68	40.22
MEAN	.80	2.25	.67	4.69	9.60	3.60	.88	.66	.44	.47	1.15	1.34
MAX	2.2	19	4.3	86	87	36	2.8	.74	.58	.80	1.3	2.0
MIN	0	0	0	0	0	0	.41	.51	.35	.35	.75	.88
AC-FT	49	134	41	288	533	221	53	40	26	29	71	80

CAL YR 1972 TOTAL 213.83 MEAN .58 MAX 19 MIN 0 AC-FT 424
WTR YR 1973 TOTAL 789.35 MEAN 2.16 MAX 87 MIN 0 AC-FT 1,570

NOTE.--No gage-height record Apr. 12 to Sept. 30.

11140800 BLOSSER DITCH NEAR DONOVAN ROAD, AT SANTA MARIA, CALIF.

LOCATION.--Lat 34°58'44", long 120°27'06", in SW¼NW¼NW¼ sec.3, T.10 N., R.34 W., Santa Barbara County, on right bank 0.8 mile north of Donovan Road, and 1.0 mile west of Broadway Boulevard, Santa Maria.

PERIOD OF RECORD.--October 1972 to September 1973. November 1962 to September 1972 in files of Santa Barbara County Flood Control and Water Conservation District.

GAGE.--Water-stage recorder and culvert control. Altitude of gage is 190 ft (from topographic map).

EXTREMES.--Current year: Maximum discharge, 230 cfs Jan. 18 (gage height, 6.88 ft); no flow many days.

REMARKS.--Records poor. Runoff affected by urbanization.

DISCHARGE, IN CUBIC FEET PER SECOND, WATER YEAR OCTOBER 1972 TO SEPTEMBER 1973

DAY	OCT	NOV	DEC	JAN	FEB	MAR	APR	MAY	JUN	JUL	AUG	SEP
1	0	.25	0	0	0	0	0	0	1.4	.30	1.7	1.2
2	.26	.58	0	0	0	0	0	2.0	1.4	0	1.1	1.1
3	0	.25	0	0	5.1	.89	.47	1.8	1.4	0	1.4	1.1
4	0	6.6	5.2	.15	.62	.92	.65	1.5	1.3	0	1.0	1.4
5	.16	0	0	.20	.58	0	.50	1.5	1.9	0	1.3	1.3
6	.55	0	15	.10	3.4	1.9	.55	1.7	2.5	0	1.2	1.6
7	.94	2.2	2.8	0	.95	0	.50	1.8	1.7	0	1.5	1.4
8	.71	0	2.9	4.5	0	8.2	0	2.0	1.3	0	.89	1.0
9	.34	0	0	14	0	0	.71	1.7	1.4	0	.83	1.6
10	1.6	12	0	.12	22	0	.60	1.7	1.5	1.3	2.0	2.5
11	0	14	0	0	64	5.3	.60	1.8	1.4	.20	2.1	2.7
12	6.7	0	0	0	48	0	.50	1.7	1.3	0	2.1	2.5
13	0	.13	0	0	78	0	.60	1.7	1.2	0	.52	1.5
14	0	15	0	0	8.3	0	.60	1.7	1.1	.17	.33	1.3
15	0	7.7	0	0	1.2	0	.50	1.9	1.3	.65	.95	1.2
16	.60	8.8	0	19	0	0	.65	1.8	1.6	.10	1.1	1.1
17	.60	.21	0	1.0	0	0	.21	1.7	1.3	.10	.30	1.5
18	.60	0	0	69	0	0	0	1.9	1.1	.88	.14	2.3
19	.60	0	0	14	0	7.0	.25	1.8	1.7	0	.14	2.0
20	.60	0	0	.14	0	30	.50	1.7	2.2	0	.27	1.2
21	.65	0	0	0	0	8.2	.55	1.6	1.3	0	.35	1.1
22	.65	0	0	0	0	2.7	.39	1.6	.88	0	.55	2.1
23	.48	0	0	0	0	0	.62	1.6	1.1	0	.75	2.8
24	.46	0	0	0	2.1	0	.50	1.6	.76	0	1.7	1.7
25	.12	0	0	0	0	0	.76	1.6	.82	0	1.7	1.0
26	0	0	0	0	.64	.31	.76	1.5	1.1	.34	2.0	1.1
27	0	0	0	0	6.6	.76	.70	1.6	1.2	.51	.48	1.1
28	.43	0	0	0	3.7	0	.76	1.5	1.1	1.6	1.1	1.6
29	0	0	0	.09	------	.31	.38	1.6	.76	.83	1.6	2.5
30	.18	0	0	3.3	------	.65	0	1.7	.55	1.4	1.2	1.7
31	.54	------	0	.26	------	0	------	1.4	------	1.6	1.2	------
TOTAL	17.77	67.72	25.9	125.86	245.19	67.14	13.81	50.7	39.57	9.98	33.50	48.2
MEAN	.57	2.26	.84	4.06	8.76	2.17	.46	1.64	1.32	.32	1.08	1.61
MAX	6.7	15	15	69	78	30	.76	2.0	2.5	1.6	2.1	2.8
MIN	0	0	0	0	0	0	0	0	.55	0	.14	1.0
AC-FT	35	134	51	250	486	133	27	101	78	20	66	96

WTR YR 1973 TOTAL 745.34 MEAN 2.04 MAX 78 MIN 0 AC-FT 1,480

11141000 SANTA MARIA RIVER AT GUADALUPE, CALIF.

LOCATION.--Lat 34°58'35", long 120°34'15", in Guadalupe Grant, Santa Barbara County, on downstream side of bridge on State Highway 1, 0.5 mile north of Guadalupe, and 4.5 miles upstream from mouth.

DRAINAGE AREA.--1,741 sq mi.

PERIOD OF RECORD.--October 1940 to current year. Monthly discharge only October 1940 to January 1941, published in WSP 1315-B.

GAGE.--Water-stage recorder and supplementary gage near right bank. Datum of gage is 64.92 ft above mean sea level. Prior to Aug. 11, 1955, at site 100 ft upstream at same datum.

AVERAGE DISCHARGE.--33 years, 32.8 cfs (23,760 acre-ft per year).

EXTREMES.--Current year: Maximum discharge, 7,960 cfs Feb. 11 (gage height, 7.28 ft); no flow most of year.
Period of record: Maximum discharge, 32,800 cfs Jan. 16, 1952 (gage height, 8.18 ft); no flow for all or parts of each year.

REMARKS.--Records poor. Cuyama River regulated since February 1959 by Twitchell Reservoir (capacity, 240,000 acre-ft). Several small surface diversions and extensive pumping from wells for irrigation along stream above station. AVERAGE DISCHARGE represents flow to ocean, regardless of upstream development.

DISCHARGE, IN CUBIC FEET PER SECOND, WATER YEAR OCTOBER 1972 TO SEPTEMBER 1973

DAY	OCT	NOV	DEC	JAN	FEB	MAR	APR	MAY	JUN	JUL	AUG	SEP
1				0	0	0						
2				0	0	0						
3				0	0	0						
4				0	0	0						
5				0	0	0						
6				0	10	0						
7				0	500	0						
8				0	8.0	0						
9				0	0	0						
10				0	53	0						
11				0	2,420	0						
12				0	785	0						
13				0	463	0						
14				0	200	0						
15				0	50	0						
16				0	20	0						
17				0	0	0						
18				26	0	0						
19				465	0	0						
20				3.9	0	11						
21				0	0	8.0						
22				0	0	5.0						
23				0	0	3.0						
24				0	0	2.0						
25				0	0	1.5						
26				0	0	1.0						
27				0	0	.70						
28				0	.29	.40						
29				0	------	.30						
30				0	------	.20						
31		------		0	------	.10	------		------			------
TOTAL	0	0	0	494.9	4,509.29	33.20	0	0	0	0	0	0
MEAN	0	0	0	16.0	161	1.07	0	0	0	0	0	0
MAX	0	0	0	465	2,420	11	0	0	0	0	0	0
MIN	0	0	0	0	0	0	0	0	0	0	0	0
AC-FT	0	0	0	982	8,940	66	0	0	0	0	0	0

CAL YR 1972 TOTAL 0.00 MEAN .00 MAX 0 MIN 0 AC-FT 0
WTR YR 1973 TOTAL 5,037.39 MEAN 13.8 MAX 2,420 MIN 0 AC-FT 9,990

11141150 ARROYO GRANDE ABOVE PHOENIX CREEK NEAR ARROYO GRANDE, CALIF.

LOCATION.--Lat 35°11'03", long 120°26'11", in Arroyo Grande Grant, San Luis Obispo County, on right bank at county road bridge 100 ft upstream from Phoenix Creek, 8.8 miles northeast of Arroyo Grande.

DRAINAGE AREA.--13.5 sq mi.

PERIOD OF RECORD.--June 1967 to current year.

GAGE.--Water-stage recorder and concrete control. Altitude of gage is 550 ft (from topographic map).

AVERAGE DISCHARGE.--6 years, 3.15 cfs (2,280 acre-ft per year).

EXTREMES.--Current year: Maximum discharge, 25 cfs Feb. 11 (gage height, 4.94 ft), from rating curve extended above 4.8 cfs; minimum daily, 0.20 cfs Oct. 6.
Period of record: Maximum discharge, 1,270 cfs Jan. 25, 1969 (gage height, 6.83 ft in gage well, 6.57 ft, from floodmarks), from rating curve extended above 350 cfs on basis of slope-area measurement of maximum flow; minimum daily, 0.16 cfs Aug. 9, 1971.

REMARKS.--Records good. No regulation or diversion above station. Records of water temperatures and total-sediment discharge for the current year are published in Part 2 of this report.

DISCHARGE, IN CUBIC FEET PER SECOND, WATER YEAR OCTOBER 1972 TO SEPTEMBER 1973

DAY	OCT	NOV	DEC	JAN	FEB	MAR	APR	MAY	JUN	JUL	AUG	SEP
1	.32	.87	.88	.87	1.2	6.1	4.9	2.8	2.7	1.9	1.2	.72
2	.32	.87	1.0	.87	1.2	4.9	4.9	2.8	2.7	2.1	1.6	1.8
3	.34	.87	1.0	1.0	1.3	4.6	4.8	3.1	2.7	1.9	1.2	.86
4	.33	1.3	1.5	1.0	1.7	4.6	4.8	2.8	2.8	1.7	1.0	.81
5	.25	.87	1.1	.85	1.2	3.9	4.7	2.8	2.8	1.6	1.1	1.2
6	.20	.87	2.0	.88	3.1	4.6	4.6	2.8	2.8	1.6	1.7	.70
7	.24	1.3	1.7	.87	2.8	4.2	4.6	2.8	2.8	1.6	1.3	.69
8	.31	.93	1.3	1.3	2.0	5.8	4.2	2.8	2.8	1.5	1.5	.68
9	.31	.87	1.2	2.8	1.7	4.6	4.5	3.1	3.0	1.5	1.1	.68
10	.46	1.2	1.0	1.8	7.0	4.2	4.5	2.8	3.2	1.6	1.3	.78
11	.40	1.9	1.0	1.2	14	5.8	4.2	2.9	3.3	1.7	1.3	.83
12	.50	.95	.99	1.2	8.8	4.6	4.2	2.9	3.3	1.7	1.2	.66
13	.40	.87	.87	1.0	9.4	4.2	3.9	2.9	3.3	1.7	1.6	.66
14	.40	2.9	.87	1.0	7.3	4.2	3.9	3.0	3.3	1.1	1.1	.70
15	1.0	1.4	.87	1.2	6.1	3.9	3.7	3.1	3.3	1.1	2.0	1.4
16	1.2	1.8	.87	3.9	5.2	3.9	3.7	3.0	3.4	1.0	1.2	1.5
17	.61	1.4	.87	2.6	4.6	3.9	3.7	3.0	3.3	.94	1.0	1.4
18	.50	1.0	.87	9.4	4.2	3.9	3.5	3.0	3.3	.94	.94	1.0
19	.50	1.0	.87	4.6	3.9	4.6	3.5	3.0	3.0	1.3	.96	1.0
20	.50	.99	1.0	2.8	3.5	12	3.3	3.0	3.3	1.5	.93	.71
21	.61	1.0	1.0	2.6	3.3	9.1	3.3	3.1	3.1	1.8	1.2	.86
22	.61	.83	1.0	2.0	3.3	8.5	3.1	3.2	2.9	1.6	1.0	.82
23	.61	.81	1.0	2.0	3.2	7.3	3.1	3.2	2.8	1.0	1.0	.82
24	.61	.87	1.0	1.7	3.6	6.7	3.1	3.1	2.5	1.1	.99	1.1
25	.61	.84	.99	1.7	3.2	6.4	3.1	3.2	2.5	1.2	1.0	1.9
26	.61	1.0	1.0	1.3	4.2	6.1	3.3	3.3	2.3	1.2	.87	1.3
27	.61	1.0	1.0	1.2	6.4	6.1	3.1	3.4	2.1	1.2	1.1	1.2
28	.61	.99	1.0	1.2	10	5.5	3.3	3.0	2.0	1.2	.74	1.3
29	.61	.99	.87	1.3	------	5.5	3.1	2.2	2.0	.94	.70	1.3
30	.61	.99	.87	1.3	------	5.2	3.1	2.3	1.9	.95	.70	1.0
31	.61	------	.87	1.2	------	5.1	------	2.6	------	1.0	.72	------
TOTAL	15.80	33.48	32.36	58.64	127.4	170.0	115.7	91.0	85.2	43.17	35.25	30.38
MEAN	.51	1.12	1.04	1.89	4.55	5.48	3.86	2.94	2.84	1.39	1.14	1.01
MAX	1.2	2.9	2.0	9.4	14	12	4.9	3.4	3.4	2.1	2.0	1.9
MIN	.20	.81	.87	.85	1.2	3.9	3.1	2.2	1.9	.94	.70	.66
AC-FT	31	66	64	116	253	337	229	180	169	86	70	60

CAL YR 1972 TOTAL 284.34 MEAN .78 MAX 2.9 MIN .18 AC-FT 564
WTR YR 1973 TOTAL 838.38 MEAN 2.30 MAX 14 MIN .20 AC-FT 1,660

PEAK DISCHARGE (BASE, 20 CFS).--Jan. 18 (1300) 21 cfs (4.86 ft); Feb. 11 (0545) 25 cfs (4.94 ft).

11141160 WITTENBERG CREEK NEAR ARROYO GRANDE, CALIF.

LOCATION.--Lat 35°13'02", long 120°27'17", in NE¼NE¼ sec.22, T.31 S., R.14 E., San Luis Obispo County, on left bank 0.4 mile upstream from Huffs Hole Creek, and 10 miles northeast of Arroyo Grande.

DRAINAGE AREA.--3.11 sq mi.

PERIOD OF RECORD.--August 1967 to current year.

GAGE.--Water-stage recorder. Altitude of gage is 560 ft (from topographic map). Prior to Oct. 8, 1970, at site 0.2 mile downstream at same datum.

AVERAGE DISCHARGE.--6 years, 1.21 cfs (877 acre-ft per year).

EXTREMES.--Current year: Maximum discharge, 260 cfs Jan. 18 (gage height, 4.98 ft), on basis of computation of peak flow through culvert; no flow many days.
Period of record: Maximum discharge, 840 cfs Jan. 19, 1969 (gage height, 7.9 ft, from outside gage); no flow many days in most years.

REMARKS.--Records fair. No regulation; small diversions above station for domestic use.

DISCHARGE, IN CUBIC FEET PER SECOND, WATER YEAR OCTOBER 1972 TO SEPTEMBER 1973

DAY	OCT	NOV	DEC	JAN	FEB	MAR	APR	MAY	JUN	JUL	AUG	SEP
1	0	.01	.02	.19	.23	18	2.5	.79	.38	.38	.16	.06
2	0	.01	.02	.19	.23	11	2.3	.79	.38	.38	.16	.06
3	0	.01	.04	.19	.27	8.0	2.3	.68	.47	.31	.16	.06
4	0	.03	.09	.19	.27	7.1	2.1	.68	.47	.25	.16	.06
5	0	.01	.09	.23	.27	6.2	1.8	.68	.47	.25	.16	.06
6	0	.02	1.1	.23	.42	7.1	1.6	.68	.47	.25	.16	.06
7	0	.02	.97	.23	3.4	7.6	1.6	.79	.47	.25	.16	.06
8	0	.03	.42	.27	3.0	8.0	1.4	.57	.68	.25	.16	.06
9	0	.04	.23	2.6	1.7	7.1	1.4	.57	.57	.25	.16	.06
10	0	.05	.19	4.5	29	6.2	1.4	.57	.57	.25	.16	.06
11	.01	.05	.16	1.7	52	9.2	1.4	.57	.57	.20	.12	.06
12	.01	.03	.16	1.3	20	7.1	1.3	.57	.57	.20	.09	.06
13	.01	.05	.16	1.2	15	5.6	1.3	.47	.57	.20	.09	.06
14	.01	.99	.16	1.2	11	5.3	1.3	.47	.57	.20	.09	.04
15	.04	.02	.16	1.2	8.4	4.6	1.2	.47	.47	.20	.09	.06
16	.01	.01	.16	11	6.4	4.2	1.2	.47	.47	.20	.09	.06
17	.01	0	.16	11	5.1	3.9	1.2	.47	.47	.20	.09	.04
18	0	0	.16	50	4.0	3.6	1.0	.47	.47	.16	.09	.04
19	0	0	.16	14	3.2	3.3	1.0	.47	.47	.16	.06	.04
20	.01	0	.19	5.4	2.8	17	1.0	.47	.47	.16	.06	.04
21	.01	0	.16	3.0	2.4	14	.90	.47	.47	.16	.06	.04
22	.01	0	.16	1.9	2.0	13	.79	.38	.47	.16	.06	.04
23	.01	0	.19	1.3	1.9	9.2	.79	.38	.47	.16	.06	.04
24	.01	0	.19	.87	1.9	7.1	.90	.38	.47	.16	.06	.04
25	0	0	.19	.70	1.6	5.8	.90	.38	.38	.16	.06	.04
26	.01	0	.19	.55	1.9	5.0	.90	.38	.38	.20	.06	.04
27	.01	0	.19	.36	8.4	4.6	.90	.38	.38	.20	.06	.04
28	0	.01	.19	.36	57	3.9	.90	.38	.38	.20	.06	.04
29	0	.01	.19	.36	------	3.6	.90	.38	.38	.16	.06	.04
30	.01	.01	.19	.36	------	3.0	.90	.38	.38	.16	.06	.06
31	.01	------	.19	.27	------	2.8	------	.38	------	.16	.06	------
TOTAL	.19	1.41	6.83	116.85	243.79	222.1	39.08	15.97	14.19	6.58	3.13	1.52
MEAN	.006	.047	.22	3.77	8.71	7.16	1.30	.52	.47	.21	.10	.051
MAX	.04	.99	1.1	50	57	18	2.5	.79	.68	.38	.16	.06
MIN	0	0	.02	.19	.23	2.8	.79	.38	.38	.16	.06	.04
AC-FT	.4	2.8	14	232	484	441	78	32	28	13	6.2	3.0

CAL YR 1972 TOTAL 42.41 MEAN .12 MAX 1.1 MIN 0 AC-FT 84
WTR YR 1973 TOTAL 671.64 MEAN 1.84 MAX 57 MIN 0 AC-FT 1,330

PEAK DISCHARGE (BASE, 50 CFS)

DATE	TIME	G.H.	DISCHARGE	DATE	TIME	G.H.	DISCHARGE
1-18	1230	4.98	260	2-28	0145	3.98	121
2-11	0645	3.95	117				

11141280 LOPEZ CREEK NEAR ARROYO GRANDE, CALIF.

LOCATION.--Lat 35°13'48", long 120°28'22", in SE¼NE¼ sec.16, T.31 S., R.14 E., San Luis Obispo County, on right bank 0.7 mile upstream from small right-bank tributary, 3.2 miles upstream from mouth, and 9.2 miles northeast of Arroyo Grande.

DRAINAGE AREA.--21.6 sq mi.

PERIOD OF RECORD.--July 1967 to current year.

GAGE.--Water-stage recorder and concrete control. Altitude of gage is 540 ft (from topographic map).

AVERAGE DISCHARGE.--6 years, 11.7 cfs (8,480 acre-ft per year).

EXTREMES.--Current year: Maximum discharge, 2,120 cfs Jan. 18 (gage height, 8.6 ft, from outside high-water marks), from rating curve extended as explained below; minimum daily, 0.62 cfs Oct. 6.
Period of record: Maximum discharge, 2,830 cfs Jan. 25, 1969 (gage height, 9.26 ft in gage well, 10.8 ft, from floodmarks), from rating curve extended above 300 cfs on basis of slope-area measurement of maximum flow; minimum daily, 0.56 cfs Aug. 15, 1972.

REMARKS.--Records fair except those periods of no gage-height record, which are poor. Small diversions above station for domestic use. Records of water temperatures and suspended-sediment discharge for the current year are published in Part 2 of this report.

DISCHARGE, IN CUBIC FEET PER SECOND, WATER YEAR OCTOBER 1972 TO SEPTEMBER 1973

DAY	OCT	NOV	DEC	JAN	FEB	MAR	APR	MAY	JUN	JUL	AUG	SEP
1	1.0	1.5	2.5	2.7	6.7	80	25	8.3	5.6	4.0	3.7	3.2
2	1.0	1.5	2.5	2.7	6.2	54	21	8.1	5.7	3.9	3.7	2.7
3	1.0	1.5	2.3	2.7	6.2	44	20	7.9	5.9	3.8	3.4	2.9
4	1.0	2.9	5.7	2.7	8.0	39	19	7.8	6.1	3.7	3.4	3.2
5	.82	2.1	4.0	2.8	7.6	32	18	7.6	6.2	3.6	3.7	3.2
6	.62	2.0	9.9	2.9	17	39	18	7.4	6.4	3.5	4.0	3.2
7	.72	2.0	19	2.9	42	39	18	7.3	6.4	3.4	4.0	2.7
8	.82	2.1	15	13	30	43	16	7.1	6.3	3.3	4.0	2.5
9	.92	2.0	12	45	22	38	15	7.0	5.9	3.2	3.7	2.7
10	2.1	4.3	9.5	70	138	34	14	6.9	5.6	3.2	3.4	2.9
11	1.7	7.5	7.5	24	275	52	14	6.8	5.3	3.1	3.7	2.9
12	2.5	5.1	6.3	18	138	43	13	6.7	5.2	3.1	3.7	2.5
13	2.1	4.3	5.7	17	140	38	13	6.6	5.1	3.1	3.4	2.3
14	1.7	23	5.1	17	88	34	13	6.5	4.9	3.1	3.4	2.5
15	3.2	22	4.6	57	64	31	15	6.4	4.8	3.1	3.4	2.3
16	3.2	26	4.6	180	47	28	12	6.3	4.6	3.1	3.2	2.5
17	2.9	20	4.0	320	38	26	12	6.2	4.5	3.2	3.2	2.3
18	2.1	12	4.0	720	31	23	11	6.1	4.5	3.2	3.2	2.3
19	2.1	9.5	3.2	94	26	25	9.2	5.9	4.4	3.3	2.9	2.3
20	2.5	7.5	3.2	43	23	130	9.8	5.7	4.4	3.4	2.9	2.3
21	2.5	6.3	3.2	27	20	82	9.2	5.6	4.4	3.4	2.9	2.3
22	1.6	5.1	3.2	20	18	72	8.0	5.5	4.4	3.6	2.9	2.1
23	1.6	4.6	2.9	15	16	60	8.6	5.4	4.4	3.8	3.2	2.1
24	1.6	4.0	2.9	12	21	51	7.6	5.4	4.4	4.0	3.2	2.1
25	1.5	3.2	2.9	9.8	17	44	5.8	5.3	4.4	4.0	3.2	2.3
26	1.5	2.9	2.9	8.6	18	39	9.3	5.2	4.3	4.0	3.2	2.1
27	1.6	2.7	2.9	7.1	84	36	9.0	5.2	4.3	4.3	3.2	2.1
28	1.6	2.7	2.9	6.7	234	33	8.9	5.1	4.2	4.3	3.2	2.1
29	1.5	2.5	2.7	7.1	------	31	8.7	5.1	4.1	4.3	3.2	2.1
30	1.5	2.5	2.7	8.0	------	28	8.5	5.2	4.1	4.3	2.9	2.3
31	1.5	------	2.7	7.1	------	26	------	5.4	------	4.0	2.9	------
TOTAL	52.00	195.3	162.5	1,765.8	1,581.7	1,374	389.6	197.0	150.8	111.3	104.0	75.0
MEAN	1.68	6.51	5.24	57.0	56.5	44.3	13.0	6.35	5.03	3.59	3.35	2.50
MAX	3.2	26	19	720	275	130	25	8.3	6.4	4.3	4.0	3.2
MIN	.62	1.5	2.3	2.7	6.2	23	5.8	5.1	4.1	3.1	2.9	2.1
AC-FT	103	387	322	3,500	3,140	2,730	773	391	299	221	206	149

CAL YR 1972 TOTAL 982.94 MEAN 2.69 MAX 26 MIN .56 AC-FT 1,950
WTR YR 1973 TOTAL 6,159.00 MEAN 16.9 MAX 720 MIN .62 AC-FT 12,220

PEAK DISCHARGE (BASE, 30 CFS, REVISED)

DATE	TIME	G.H.	DISCHARGE	DATE	TIME	G.H.	DISCHARGE
11-14	0715	4.08	66	2-28	0215	5.45	414
1-10	unknown	--	unknown	3-8	0700	3.75	51
1-18	unknown	8.6	2,120	3-11	0545	3.85	65
2-6	2030	3.73	48	3-20	0415	4.50	190
2-11	0600	5.64	470				

NOTE.--No gage-height record Jan. 5-18, Apr. 26 to July 24.

11141400 TAR SPRING CREEK NEAR ARROYO GRANDE, CALIF.

LOCATION.--Lat 35°07'56", long 120°32'30", in Santa Manuela Grant, San Luis Obispo County, on right bank 0.5 mile upstream from mouth, and 2.1 miles northeast of Arroyo Grande.

DRAINAGE AREA.--18.2 sq mi.

PERIOD OF RECORD.--August 1967 to current year.

GAGE.--Water-stage recorder and rain gage. Altitude of gage is 180 ft (from topographic map). Prior to May 20, 1969, at site 0.3 mile upstream at datum 24.00 ft higher.

AVERAGE DISCHARGE.--6 years, 3.25 cfs (2,350 acre-ft per year).

EXTREMES.--Current year: Maximum discharge, 1,090 cfs Jan. 18 (gage height, 10.26 ft), from rating curve extended above 2.7 cfs on basis of slope-area measurement of peak flow; minimum daily, 0.01 cfs Aug. 11-13, 24-27.
Period of record: Maximum discharge, 1,340 cfs Jan. 25, 1969 (gage height, 10.1 ft, from floodmarks), from rating curve extended above 68 cfs on basis of slope-area measurement of maximum flow; no flow at times.

REMARKS.--Records fair except those for period of indefinite stage-discharge relation, which are poor. No regulation; some diversion above station for irrigation.

DISCHARGE, IN CUBIC FEET PER SECOND, WATER YEAR OCTOBER 1972 TO SEPTEMBER 1973

DAY	OCT	NOV	DEC	JAN	FEB	MAR	APR	MAY	JUN	JUL	AUG	SEP
1	.02	.03	.06	.10	2.2	23	4.1	1.6	.43	.20	.03	.52
2	.02	.03	.06	.06	1.9	11	3.9	1.3	.41	.19	.03	.52
3	.02	.03	.06	.06	1.8	8.0	3.8	1.2	.38	.18	.09	.42
4	.02	.06	.06	.06	1.8	7.0	3.7	1.1	.37	.18	.52	.42
5	.02	.06	.06	.05	2.0	5.8	3.7	1.0	.36	.17	.60	.42
6	.02	.06	.10	.05	2.6	5.8	3.6	1.0	.34	.17	.52	.42
7	.02	.06	.19	.05	3.8	6.0	3.6	1.0	.33	.17	.09	.42
8	.02	.06	.19	.06	3.2	11	3.6	1.0	.32	.16	.09	.27
9	.06	.06	.10	.11	2.6	7.5	3.7	1.0	.32	.16	.05	.27
10	.06	.10	.10	.10	12	5.3	3.8	1.1	.31	.15	.03	.27
11	.10	.36	.19	.06	62	12	3.9	1.1	.30	.15	.01	.27
12	.10	.19	.36	.05	31	7.2	4.0	1.1	.30	.15	.01	.27
13	.10	.19	.36	.05	34	6.0	4.0	1.1	.29	.14	.01	.27
14	.06	1.4	.36	.05	22	5.3	4.1	1.1	.29	.14	.02	.27
15	.10	.10	.36	.05	15	4.5	4.2	1.1	.28	.13	.02	.27
16	.10	1.0	.36	6.7	10	4.2	4.2	1.1	.27	.13	.42	.27
17	.10	.67	.36	2.5	8.0	4.0	4.2	1.0	.27	.12	.99	.27
18	.10	.19	.36	196	6.0	4.2	4.0	1.0	.26	.12	.60	.27
19	.10	.19	.36	11	4.7	6.0	3.5	1.0	.25	.11	.52	.42
20	.10	.19	.36	2.5	3.8	60	3.0	.96	.25	.11	.27	.51
21	.10	.10	.19	10	3.3	38	2.6	.90	.24	.10	.27	.60
22	.06	.10	.36	6.8	2.9	23	2.2	.85	.24	.10	.27	.66
23	.06	.10	.19	5.4	2.8	15	2.0	.76	.23	.09	.05	.82
24	.06	.10	.10	3.9	2.9	11	1.8	.70	.23	.09	.01	.74
25	.06	.10	.10	3.3	3.2	8.5	1.6	.64	.22	.09	.01	.82
26	.03	.10	.10	3.1	4.2	7.0	1.5	.60	.22	.09	.01	.82
27	.03	.06	.10	2.8	11	6.0	1.4	.56	.22	.42	.01	.91
28	.03	.06	.10	2.5	45	5.4	1.3	.54	.21	.52	.66	.82
29	.03	.10	.10	2.4	------	5.0	1.3	.50	.21	.09	1.2	.74
30	.03	.06	.10	2.4	------	4.7	1.5	.48	.21	.05	.74	.74
31	.03	------	.10	2.6	------	4.4	------	.46	------	.05	.60	------
TOTAL	1.76	5.91	5.95	264.86	305.7	331.8	93.8	28.85	8.56	4.72	8.75	14.71
MEAN	.057	.20	.19	8.54	10.9	10.7	3.13	.93	.29	.15	.28	.49
MAX	.10	1.4	.36	196	62	60	4.2	1.6	.43	.52	1.2	.91
MIN	.02	.03	.06	.05	1.8	4.0	1.3	.46	.21	.05	.01	.27
AC-FT	3.5	12	12	525	606	658	186	57	17	9.4	17	29
(a)	1.18	4.75	1.86	6.82	6.67	4.18	0	0	0	0	0	0

CAL YR 1972 TOTAL 69.33 MEAN .19 MAX 1.6 MIN .01 AC-FT 138
WTR YR 1973 TOTAL 1,075.37 MEAN 2.95 MAX 196 MIN .01 AC-FT 2,130

PEAK DISCHARGE (BASE, 20 CFS)

DATE	TIME	G.H.	DISCHARGE	DATE	TIME	G.H.	DISCHARGE
1-18	1415	10.26	1,090	2-28	0315	--	unknown
2-11	0330	--	unknown	3-20	0700	--	unknown

a Precipitation, in inches.
NOTE.--Stage-discharge relation indefinite Jan. 20 to July 25.

11141500 ARROYO GRANDE AT ARROYO GRANDE, CALIF.

LOCATION.--Lat 35°07'28", long 120°34'05", in Pismo Grant, San Luis Obispo County, on left bank at Arroyo Grande, 0.7 mile upstream from U.S. Highway 101.

DRAINAGE AREA.--102 sq mi.

PERIOD OF RECORD.--October 1939 to current year. Records for water year 1940 incomplete, yearly estimate published in WSP 1315-B.

GAGE.--Water-stage recorder and broad-crested weir. Datum of gage is 97.77 ft above mean sea level. Prior to July 10, 1947, at datum 0.50 ft higher.

AVERAGE DISCHARGE.--29 years (1939-68), 19.4 cfs (14,060 acre-ft per year); 5 years (1968-73), 13.6 cfs (9,850 acre-ft per year).

EXTREMES.--Current year: Maximum discharge, 2,250 cfs Jan. 18 (gage height, 8.00 ft); minimum daily, 0.80 cfs Oct. 7.
Period of record: Maximum discharge, 5,400 cfs Dec. 6, 1966 (gage height, 12.88 ft); no flow for several days in some years. Maximum discharge since construction of Lopez Dam in 1968, 2,990 cfs Feb. 24, 1969 (gage height, 9.48 ft).

REMARKS.--Records good. Flow regulated by Lopez Dam 7.8 miles upstream since 1968 (usable capacity, 47,800 acre-ft). Many small and intermittent diversions by pumping from stream for irrigation of about 4,000 acres above station.

REVISIONS (WATER YEARS).--WSP 931: 1940. WSP 1011: 1941, 1942(M). WSP 1929: Drainage area.

DISCHARGE, IN CUBIC FEET PER SECOND, WATER YEAR OCTOBER 1972 TO SEPTEMBER 1973

DAY	OCT	NOV	DEC	JAN	FEB	MAR	APR	MAY	JUN	JUL	AUG	SEP
1	2.5	4.2	3.5	4.2	7.8	54	24	13	10	4.4	4.7	2.3
2	2.5	4.0	3.3	4.7	7.4	40	24	12	11	5.6	5.0	2.9
3	3.1	4.2	3.1	3.8	7.0	30	25	11	9.6	4.4	5.0	4.2
4	3.3	5.3	4.2	3.7	8.7	28	26	10	10	3.5	5.3	4.2
5	2.0	5.0	3.7	3.7	7.8	21	27	10	9.6	3.7	5.6	4.4
6	1.8	5.0	6.4	3.7	13	26	27	10	9.6	3.7	4.7	4.4
7	.80	5.0	7.0	3.5	14	22	28	10	9.6	4.4	3.1	3.7
8	1.8	5.3	6.7	4.2	12	45	31	10	8.7	3.3	2.7	3.3
9	2.1	6.0	6.0	6.0	9.6	25	31	11	9.2	4.0	1.8	3.5
10	2.1	6.4	5.6	5.6	127	20	29	11	5.6	3.7	2.5	3.7
11	3.1	11	5.6	5.0	259	49	30	11	6.4	5.6	3.5	4.4
12	3.3	7.4	5.6	5.0	118	26	31	11	5.3	6.0	4.2	4.4
13	3.1	7.4	5.6	5.0	126	21	32	10	5.3	6.0	3.7	4.4
14	3.3	35	5.6	4.4	72	18	31	11	5.6	6.7	4.2	4.7
15	3.7	8.7	5.6	4.2	43	16	31	10	6.4	5.6	4.2	6.0
16	4.0	16	5.6	33	38	16	30	11	6.0	6.0	4.7	5.6
17	3.7	10	5.6	15	30	16	28	9.6	6.7	6.7	4.7	5.0
18	3.7	6.7	5.3	398	22	16	26	8.7	5.0	6.4	4.0	6.4
19	4.0	5.6	5.3	82	18	18	25	9.6	5.6	6.4	3.5	5.3
20	4.2	6.4	5.3	36	14	257	22	10	4.7	6.7	3.5	3.7
21	4.2	5.6	5.6	22	12	124	20	7.4	3.1	6.4	3.7	3.7
22	4.2	5.0	5.6	17	11	81	18	6.4	3.7	6.7	4.0	4.4
23	4.4	4.2	5.3	13	11	58	16	8.7	2.7	6.0	2.9	5.0
24	4.7	4.2	5.0	11	13	45	17	8.2	3.3	3.5	2.0	5.3
25	4.7	4.0	5.3	10	12	40	15	7.8	3.3	3.3	3.5	3.3
26	4.4	3.7	5.3	10	14	39	15	7.0	4.0	3.7	4.2	2.5
27	4.7	3.5	5.0	9.6	73	36	14	5.0	4.4	3.5	3.7	1.8
28	4.2	3.5	5.0	9.6	176	33	12	6.0	4.4	3.7	2.9	1.8
29	4.0	3.7	5.3	10	------	29	14	6.0	3.5	4.4	4.2	2.7
30	4.2	3.5	5.0	11	------	26	15	6.4	3.3	4.4	2.7	3.3
31	4.2	------	4.0	8.7	------	24	------	9.2	------	4.7	2.3	------
TOTAL	106.00	205.5	161.0	762.6	1,276.3	1,299	714	288.0	185.6	153.1	116.7	120.3
MEAN	3.42	6.85	5.19	24.6	45.6	41.9	23.8	9.29	6.19	4.94	3.76	4.01
MAX	4.7	35	7.0	398	259	257	32	13	11	6.7	5.6	6.4
MIN	.80	3.5	3.1	3.5	7.0	16	12	5.0	2.7	3.3	1.8	1.8
AC-FT	210	408	319	1,510	2,530	2,580	1,420	571	368	304	231	239

CAL YR 1972 TOTAL 1,468.88 MEAN 4.01 MAX 35 MIN .27 AC-FT 2,910
WTR YR 1973 TOTAL 5,388.10 MEAN 14.8 MAX 398 MIN .80 AC-FT 10,690

11141600 LOS BERROS CREEK NEAR NIPOMO, CALIF.

LOCATION.--Lat 35°05'17", long 120°30'32", in Nipomo Grant (on boundary), San Luis Obispo County, on left bank at upstream side of bridge, 0.8 mile downstream from Adobe Creek, and 3.7 miles northwest of Nipomo.

DRAINAGE AREA.--15.0 sq mi.

PERIOD OF RECORD.--August 1968 to current year.

GAGE.--Water-stage recorder and broad-crested weir. Altitude of gage is 312 ft (from topographic map).

AVERAGE DISCHARGE.--5 years, 2.46 cfs (1,780 acre-ft per year).

EXTREMES.--Current year: Maximum discharge, 324 cfs Jan. 18 (gage height, 4.08 ft); minimum daily, 0.01 cfs Nov. 3.
Period of record: Maximum discharge, 599 cfs Jan. 25, 1969 (gage height, 5.43 ft), from rating curve extended above 230 cfs on basis of slope-area measurement of maximum flow; minimum daily, 0.01 cfs Nov. 3, 1972.

REMARKS.--Records good. No regulation or diversion above station.

DISCHARGE, IN CUBIC FEET PER SECOND, WATER YEAR OCTOBER 1972 TO SEPTEMBER 1973

DAY	OCT	NOV	DEC	JAN	FEB	MAR	APR	MAY	JUN	JUL	AUG	SEP
1	.07	.02	.15	.22	1.6	30	4.7	1.6	.82	.19	.12	.08
2	.07	.02	.15	.22	1.5	22	3.8	1.6	.67	.17	.12	.08
3	.09	.01	.15	.22	1.8	17	4.4	1.6	.60	.14	.11	.08
4	.09	.03	.15	.22	2.3	15	4.1	1.6	.60	.12	.09	.08
5	.09	.04	.15	.19	2.3	12	3.8	1.6	.54	.14	.09	.08
6	.09	.03	.34	.22	4.1	12	3.5	1.6	.49	.14	.11	.07
7	.09	.04	.19	.19	8.6	11	3.5	1.5	.44	.17	.12	.06
8	.09	.04	.22	.19	9.1	14	3.2	1.4	.44	.17	.12	.06
9	.11	.04	.17	.25	5.8	12	3.2	1.2	.39	.19	.09	.06
10	.11	.05	.17	.22	61	11	3.2	1.2	.35	.22	.09	.06
11	.11	.06	.17	.22	131	19	3.0	1.2	.35	.22	.09	.06
12	.12	.04	.17	.19	51	17	3.0	1.4	.35	.22	.09	.06
13	.07	.04	.17	.22	70	15	3.0	1.4	.35	.25	.09	.06
14	.05	1.9	.17	.25	40	13	3.0	1.4	.35	.31	.08	.06
15	.06	1.5	.17	.25	23	12	3.0	1.5	.35	.28	.07	.05
16	.06	1.2	.17	1.7	15	11	2.7	1.4	.28	.25	.07	.04
17	.06	.74	.19	7.6	11	9.6	2.7	1.1	.31	.25	.07	.07
18	.06	.28	.19	102	9.1	8.1	2.7	1.1	.28	.25	.07	.07
19	.06	.25	.19	46	8.1	10	2.5	1.0	.25	.25	.07	.06
20	.06	.24	.19	15	6.7	61	2.3	1.0	.19	.25	.07	.05
21	.05	.22	.19	7.6	6.2	43	2.1	.90	.19	.25	.07	.04
22	.05	.20	.19	4.7	6.2	37	2.1	.90	.19	.25	.07	.04
23	.05	.18	.19	3.2	4.4	26	2.1	.90	.19	.25	.06	.04
24	.05	.18	.19	2.7	5.1	19	1.8	.90	.22	.25	.06	.05
25	.05	.17	.19	2.3	3.2	13	1.8	.74	.22	.17	.05	.06
26	.05	.16	.19	1.8	3.8	11	1.8	.74	.14	.11	.05	.05
27	.04	.15	.19	1.6	9.6	9.6	1.8	.60	.14	.11	.05	.05
28	.04	.15	.19	1.2	35	8.1	1.8	.54	.17	.12	.07	.05
29	.04	.16	.19	1.9	------	7.2	1.6	.54	.19	.14	.08	.05
30	.04	.15	.19	2.7	------	6.2	1.6	.60	.19	.14	.08	.05
31	.03	------	.22	1.8	------	5.4	------	.74	------	.14	.08	------
TOTAL	2.10	8.29	5.74	207.07	536.5	517.2	83.8	35.50	10.24	6.11	2.55	1.77
MEAN	.068	.28	.19	6.68	19.2	16.7	2.79	1.15	.34	.20	.082	.059
MAX	.12	1.9	.34	102	131	61	4.7	1.6	.82	.31	.12	.08
MIN	.03	.01	.15	.19	1.5	5.4	1.6	.54	.14	.11	.05	.04
AC-FT	4.2	16	11	411	1,060	1,030	166	70	20	12	5.1	3.5

CAL YR 1972 TOTAL 48.43 MEAN .13 MAX 1.9 MIN .01 AC-FT 96
WTR YR 1973 TOTAL 1,416.87 MEAN 3.88 MAX 131 MIN .01 AC-FT 2,810

PEAK DISCHARGE (BASE, 7 CFS)

DATE	TIME	G.H.	DISCHARGE	DATE	TIME	G.H.	DISCHARGE
11-14	0515	1.78	16	2-28	0145	2.13	43
1-18	1515	4.08	324	3-8	0415	1.82	18
2-7	2145	1.80	17	3-11	0315	2.05	36
2-11	0545	3.55	232	3-20	0230	2.68	102

11142080 MORRO CREEK AT MORRO BAY, CALIF.

LOCATION.--Lat 35°22'42", long 120°51'12", in Moro Y Cayucos Grant, San Luis Obispo County, on left bank at upstream side of frontage road bridge in town of Morro Bay, and 700 ft downstream from Little Morro Creek.

DRAINAGE AREA.--24.0 sq mi.

PERIOD OF RECORD.--October 1970 to current year.

GAGE.--Water-stage recorder. Altitude of gage is 20 ft (from topographic map).

EXTREMES.--Current year: Maximum discharge, 1,960 cfs Jan. 18 (gage height, 10.38 ft), from rating curve extended as explained below; no flow many days.
Period of record: Maximum discharge, 1,960 cfs Jan. 18, 1973 (gage height, 10.38 ft), from rating curve extended above 440 cfs on basis of slope-area measurement of maximum flow; no flow for long periods in each year.

REMARKS.--Records fair except those for periods of no gage-height record, which are poor. No regulation; small diversion above station for individual use.

DISCHARGE, IN CUBIC FEET PER SECOND, WATER YEAR OCTOBER 1972 TO SEPTEMBER 1973

DAY	OCT	NOV	DEC	JAN	FEB	MAR	APR	MAY	JUN	JUL	AUG	SEP
1		0	.03	.86	14	145	30	12	8.2	2.4	1.8	.79
2		0	.04	.86	14	116	29	12	8.2	2.4	2.2	.88
3		0	.15	.94	14	97	27	12	7.6	2.2	2.2	.88
4		0	2.0	.80	28	89	26	11	6.3	2.0	1.8	1.1
5		0	.70	.79	25	78	27	10	7.6	1.8	2.0	.75
6		0	3.9	.77	122	95	27	9.6	7.6	1.8	2.0	.64
7		0	12	.61	114	83	26	9.6	6.3	1.8	1.8	.58
8		0	7.4	1.8	59	89	25	8.8	4.9	2.0	1.6	.57
9		0	5.0	22	21	59	24	9.7	3.6	2.2	1.4	.54
10		0	3.8	17	432	48	24	9.1	3.6	2.3	1.1	.68
11		0	2.9	11	550	53	23	8.7	6.3	2.6	1.1	.91
12		0	2.4	8.2	281	46	22	9.3	7.6	2.2	1.1	.83
13		0	2.4	7.0	292	41	22	8.2	7.0	2.0	1.6	1.1
14		0	2.1	5.7	178	39	22	8.0	6.3	1.8	2.0	.80
15		22	1.9	5.3	115	33	22	8.2	3.0	2.2	1.8	.66
16		18	2.4	130	86	30	20	8.2	4.5	1.6	1.8	1.2
17		3.6	2.3	82	69	30	19	7.8	4.9	1.3	1.4	1.2
18		1.3	2.0	705	57	28	19	7.8	4.2	1.2	1.8	1.5
19		.47	2.4	207	49	27	19	7.8	4.2	1.2	1.8	1.5
20		.18	1.9	58	42	204	18	7.0	6.3	1.2	1.4	1.4
21		.10	1.3	41	38	145	17	7.0	4.2	1.4	1.1	1.2
22		.10	1.5	32	34	116	16	6.4	3.3	1.7	1.1	1.2
23		.07	1.3	27	32	97	16	6.7	4.5	1.8	.88	.70
24		.02	1.2	22	33	80	15	6.9	2.8	1.5	.47	.69
25		.01	1.1	18	29	66	14	7.0	2.8	1.2	.61	.69
26		.03	1.1	15	32	54	13	7.0	2.6	1.2	.34	.90
27		.03	1.1	13	124	48	13	6.6	2.6	1.3	.53	.82
28		.06	1.2	11	381	40	13	6.4	2.6	1.7	.79	.74
29		.02	1.4	18	------	36	13	6.8	2.6	2.7	.70	.68
30		.02	1.0	33	------	33	12	7.4	2.4	1.6	.61	.66
31		------	.94	17	------	31	------	8.2	------	2.2	.88	------
TOTAL	0	46.01	70.86	1,512.63	3,265	2,176	613	261.2	148.6	56.5	41.71	26.79
MEAN	0	1.53	2.29	48.8	117	70.2	20.4	8.43	4.95	1.82	1.35	.89
MAX	0	22	12	705	550	204	30	12	8.2	2.7	2.2	1.5
MIN	0	0	.03	.61	14	27	12	6.4	2.4	1.2	.34	.54
AC-FT	0	91	141	3,000	6,480	4,320	1,220	518	295	112	83	53

CAL YR 1972 TOTAL 151.47 MEAN .41 MAX 22 MIN 0 AC-FT 300
WTR YR 1973 TOTAL 8,218.30 MEAN 22.5 MAX 705 MIN 0 AC-FT 16,300

PEAK DISCHARGE (BASE, 20 CFS)

DATE	TIME	G.H.	DISCHARGE	DATE	TIME	G.H.	DISCHARGE
11-15	2200	4.71	314	2-10	0630	7.95	1,180
1-9	0945	3.66	78	2-28	0045	7.29	987
1-18	1215	10.38	1,960	3-6	1445	3.87	120
1-30	0645	3.74	93	3-20	0245	6.15	668
2-6	1500	5.73	562				

NOTE.--No gage-height record May 8 to July 10.

11142100 TORO CREEK NEAR MORRO BAY, CALIF.

LOCATION.--Lat 35°25'31", long 120°51'33", in Moro Y Cayucos Grant, San Luis Obispo County, on left bank at downstream side of county road bridge, 0.3 mile downstream from small right-bank tributary, and 2.3 miles north of town of Morro Bay.

DRAINAGE AREA.--14.0 sq mi.

PERIOD OF RECORD.--October 1970 to current year.

GAGE.--Water-stage recorder. Altitude of gage is 40 ft (from topographic map).

EXTREMES.--Current year: Maximum discharge, 4,600 cfs Jan. 18 (gage height, 9.65 ft), from rating curve extended as explained below; no flow many days.
Period of record: Maximum discharge, 4,600 cfs Jan. 18, 1973 (gage height, 9.65 ft), from rating curve extended above 140 cfs on basis of slope-area measurement of maximum flow; no flow many days in each year.

REMARKS.--Records good. No regulation; small diversion above station for individual use.

DISCHARGE, IN CUBIC FEET PER SECOND, WATER YEAR OCTOBER 1972 TO SEPTEMBER 1973

DAY	OCT	NOV	DEC	JAN	FEB	MAR	APR	MAY	JUN	JUL	AUG	SEP
1		0	.04	.92	19	87	16	6.8	4.3	1.4	2.8	.53
2		0	.06	.70	11	68	16	5.9	4.2	1.4	2.2	.40
3		0	.06	.70	10	64	15	5.9	4.2	1.4	2.5	.53
4		0	1.2	.70	15	61	15	5.2	4.1	1.2	2.0	1.5
5		0	.40	.70	25	47	15	5.2	3.7	1.1	2.0	1.2
6		0	1.8	.70	41	51	15	4.6	3.2	1.1	2.5	.53
7		0	2.5	.70	47	32	15	4.3	3.0	1.1	1.6	.46
8		0	2.7	3.0	33	58	14	4.9	4.5	1.2	1.0	.29
9		0	2.2	14	29	41	14	5.1	4.7	1.3	.92	.34
10		0	2.0	10	415	39	15	4.6	3.8	1.1	.92	.46
11		0	1.8	7.3	265	71	14	4.5	3.8	1.3	1.3	.64
12		0	1.5	5.6	200	55	14	4.9	4.9	2.7	.92	.68
13		0	1.3	5.6	198	48	14	4.3	5.5	2.8	.92	.75
14		1.2	1.3	5.2	131	41	13	4.2	5.6	4.9	.92	.80
15		8.7	1.2	5.2	73	33	12	4.3	5.6	4.3	.92	.80
16		9.9	1.2	61	40	29	11	4.2	5.1	4.6	.92	.80
17		3.2	1.0	32	15	27	11	4.0	4.2	2.8	.92	.76
18		.70	1.5	849	8.8	26	11	4.0	3.3	2.2	1.0	.66
19		.34	2.0	99	6.2	45	9.9	4.0	3.2	1.8	1.0	.64
20		.18	1.6	52	16	130	9.7	3.7	2.8	1.8	1.0	.70
21		.11	1.8	41	27	100	9.2	3.7	3.7	1.5	1.0	.59
22		.09	2.0	27	15	66	8.5	3.3	2.1	2.0	1.0	.79
23		.08	2.0	29	11	52	8.0	3.5	2.5	2.5	.70	.92
24		.08	1.6	18	14	39	8.2	3.6	1.9	1.8	.80	1.3
25		.06	1.6	11	8.3	33	8.1	3.6	1.7	1.2	.80	1.4
26		.06	1.3	9.4	7.3	27	7.6	3.6	1.6	1.6	.80	.70
27		.06	1.3	6.7	89	24	7.3	3.5	1.6	2.0	1.0	.51
28		.04	1.3	8.2	181	22	7.1	3.3	1.6	2.2	.70	.46
29		.04	1.2	13	------	20	6.8	3.5	1.6	4.3	.40	.48
30		.04	.92	44	------	18	6.8	3.9	1.4	5.9	.53	.76
31		------	.92	26	------	17	------	4.3	------	3.6	.61	------
TOTAL	0	24.88	43.30	1,387.32	1,950.6	1,471	347.2	134.4	103.4	70.1	36.60	21.38
MEAN	0	.83	1.40	44.8	69.7	47.5	11.6	4.34	3.45	2.26	1.18	.71
MAX	0	9.9	2.7	849	415	130	16	6.8	5.6	5.9	2.8	1.5
MIN	0	0	.04	.70	6.2	17	6.8	3.3	1.4	1.1	.40	.29
AC-FT	0	49	86	2,750	3,870	2,920	689	267	205	139	73	42

CAL YR 1972 TOTAL 137.63 MEAN .38 MAX 9.9 MIN 0 AC-FT 273
WTR YR 1973 TOTAL 5,590.18 MEAN 15.3 MAX 849 MIN 0 AC-FT 11,090

PEAK DISCHARGE (BASE, 25 CFS)

DATE	TIME	G.H.	DISCHARGE	DATE	TIME	G.H.	DISCHARGE
11-15	2130	2.44	160	2-10	0600	6.96	2,320
1-8	2315	1.72	44	2-21	1845	1.65	39
1-18	1030	9.65	4,600	2-27	2400	4.27	756
1-21	0100	2.02	75	3-8	0345	2.70	220
1-30	0530	2.23	119	3-11	0330	2.33	138
2-6	1400	2.60	195	3-20	unknown	--	unknown

11142500 ARROYO DE LA CRUZ NEAR SAN SIMEON, CALIF.

LOCATION.--Lat 35°43'02", long 121°17'02", in Piedra Blanca Grant, San Luis Obispo County, on right bank 1.7 miles upstream from mouth, and 7 miles northwest of San Simeon.

DRAINAGE AREA.--41.2 sq mi.

PERIOD OF RECORD.--October 1950 to current year.

GAGE.--Water-stage recorder. Altitude of gage is 22 ft (from topographic map).

AVERAGE DISCHARGE.--23 years, 55.3 cfs (40,060 acre-ft per year).

EXTREMES.--Current year: Maximum discharge, 12,900 cfs Jan. 18 (gage height, 11.14 ft), from rating curve extended as explained below; no flow for long periods.
Period of record: Maximum discharge, 35,200 cfs Dec. 6, 1966 (gage height, 15.27 ft), from rating curve extended above 7,600 cfs on basis of slope-area measurements at gage heights 12.40 and 15.27 ft; no flow for long periods in each year.

REMARKS.--Records good. No regulation or diversion above station.

REVISIONS (WATER YEARS).--WSP 1245: 1951.

DISCHARGE, IN CUBIC FEET PER SECOND, WATER YEAR OCTOBER 1972 TO SEPTEMBER 1973

DAY	OCT	NOV	DEC	JAN	FEB	MAR	APR	MAY	JUN	JUL	AUG	SEP
1		0	6.6	2.0	165	481	67	17	7.1	3.0		
2		0	5.7	2.0	130	318	62	16	7.1	2.5		
3		0	5.7	2.0	128	252	58	16	7.1	2.1		
4		0	17	1.9	124	226	54	15	7.1	1.7		
5		0	13	1.7	101	176	52	14	6.9	1.0		
6		0	9.0	1.7	630	412	50	14	6.6	.42		
7		0	13	1.7	484	279	47	13	6.4	.10		
8		0	17	175	314	316	45	13	5.9	0		
9		0	14	780	263	212	43	12	5.6	0		
10		0	10	341	701	177	41	12	5.4	0		
11		5.8	8.6	130	1,240	225	39	11	5.2	0		
12		0	7.6	77	936	165	37	11	5.0	0		
13		91	7.1	59	770	137	36	11	5.0	0		
14		1,180	6.6	49	514	120	36	11	4.8	0		
15		735	5.7	44	371	105	34	11	4.8	0		
16		610	5.4	2,420	290	94	32	10	4.6	0		
17		448	5.4	660	239	87	31	9.9	4.6	0		
18		158	5.7	4,030	202	79	29	9.5	4.4	0		
19		84	5.0	775	177	185	27	9.3	4.3	0		
20		54	4.7	406	155	532	26	9.0	4.3	0		
21		39	4.3	305	137	436	25	8.9	4.3	0		
22		31	4.7	245	122	296	24	8.9	4.3	0		
23		24	5.0	210	112	202	22	8.8	4.3	0		
24		19	4.3	188	270	165	22	8.7	4.5	0		
25		16	3.6	173	180	141	21	8.5	4.1	0		
26		13	3.2	155	574	124	21	8.3	3.9	0		
27		11	3.2	141	1,530	110	20	8.2	3.8	0		
28		9.5	2.9	130	1,150	99	19	8.1	3.6	0		
29		8.1	2.5	399	------	89	18	7.7	3.5	0		
30		7.1	2.3	605	------	80	18	7.3	3.1	0		
31		------	2.2	233	------	74	------	7.1	------	0		------
TOTAL	0	3,543.5	211.0	12,743.0	12,009	6,394	1,056	335.2	151.6	10.82	0	0
MEAN	0	118	6.81	411	429	206	35.2	10.8	5.05	.35	0	0
MAX	0	1,180	17	4,030	1,530	532	67	17	7.1	3.0	0	0
MIN	0	0	2.2	1.7	101	74	18	7.1	3.1	0	0	0
AC-FT	0	7,030	419	25,280	23,820	12,680	2,090	665	301	21	0	0

CAL YR 1972 TOTAL 4,940.38 MEAN 13.5 MAX 1,180 MIN 0 AC-FT 9,800
WTR YR 1973 TOTAL 36,454.12 MEAN 99.9 MAX 4,030 MIN 0 AC-FT 72,310

PEAK DISCHARGE (BASE, 2,500 CFS)

DATE	TIME	G.H.	DISCHARGE	DATE	TIME	G.H.	DISCHARGE
11-15	2100	7.90	4,480	2-6	1345	6.49	2,520
1-16	1415	9.50	7,750	2-11	0530	7.04	3,250
1-18	0830	11.14	12,900	2-27	2345	6.87	3,050

11143000 BIG SUR RIVER NEAR BIG SUR, CALIF.

LOCATION.--Lat 36°14'45", long 121°46'20", in SW¼SW¼ sec.29, T.19 S., R.2 E., Monterey County, on right bank at downstream side of bridge, 0.4 mile upstream from Post Creek, and 2.6 miles southeast of town of Big Sur.

DRAINAGE AREA.--46.5 sq mi.

PERIOD OF RECORD.--March 1950 to current year. Prior to October 1959, published as Sur River at Big Sur.

GAGE.--Water-stage recorder. Altitude of gage is 400 ft (from topographic map). Prior to Oct. 1, 1951, nonrecording gage at site 0.9 mile downstream at different datum.

AVERAGE DISCHARGE.--23 years, 93.8 cfs (67,960 acre-ft per year).

EXTREMES.--Current year: Maximum discharge, 2,790 cfs Feb. 11 (gage height, 8.36 ft); minimum daily, 8.9 cfs Oct. 7.
Period of record: Maximum discharge, 5,680 cfs Apr. 2, 1958 (gage height, 11.56 ft); minimum, 3.7 cfs Oct. 7, 1961.

REMARKS.--Records good. No regulation or diversion above station. Records of water temperatures for the current year are published in Part 2 of this report.

REVISIONS (WATER YEARS).--WSP 1445: 1952(P), 1953(M). WSP 1715: 1951, drainage area.

DISCHARGE, IN CUBIC FEET PER SECOND, WATER YEAR OCTOBER 1972 TO SEPTEMBER 1973

DAY	OCT	NOV	DEC	JAN	FEB	MAR	APR	MAY	JUN	JUL	AUG	SEP
1	9.4	15	54	41	259	1,160	233	97	54	34	22	18
2	9.4	15	52	40	235	942	220	94	54	33	22	18
3	9.8	15	52	40	228	822	210	92	52	32	22	18
4	9.4	65	63	40	218	738	200	90	51	31	22	18
5	9.4	35	55	39	215	640	192	88	50	30	22	18
6	9.4	28	80	38	377	645	186	87	48	30	23	18
7	8.9	30	84	38	830	590	179	84	46	30	23	17
8	9.4	29	77	63	695	570	172	83	44	30	22	17
9	11	26	71	261	625	515	165	81	44	29	21	17
10	17	48	68	307	1,330	479	163	78	44	29	21	17
11	13	149	65	196	2,290	466	159	77	44	28	20	18
12	25	86	62	160	1,650	422	152	76	44	28	20	18
13	22	259	60	131	1,540	394	152	74	44	28	19	18
14	36	906	57	116	1,340	362	150	73	44	28	19	18
15	138	1,100	55	109	1,120	336	144	71	44	29	19	18
16	78	852	53	1,010	948	315	138	69	43	29	18	18
17	94	405	57	934	800	298	136	66	42	29	18	18
18	41	241	55	1,420	690	284	132	65	41	29	18	18
19	31	173	60	1,120	595	362	127	65	39	29	18	17
20	26	137	56	753	510	474	125	64	38	29	17	17
21	25	115	54	563	445	442	121	63	38	27	17	17
22	22	102	55	421	393	438	116	63	38	27	18	17
23	20	92	52	325	357	402	114	62	37	24	18	18
24	20	84	50	277	500	374	112	59	37	24	19	18
25	18	77	49	250	397	347	109	59	36	23	19	18
26	17	71	47	222	500	329	108	57	36	22	20	17
27	17	67	46	195	695	308	104	56	35	23	21	17
28	17	63	46	179	1,320	287	103	55	35	23	20	17
29	17	59	44	274	------	268	101	53	35	23	18	17
30	15	56	43	337	------	256	100	53	34	22	18	17
31	15	------	42	295	------	247	------	54	------	22	18	------
TOTAL	810.1	5,400	1,764	10,194	21,102	14,512	4,423	2,208	1,271	854	612	527
MEAN	26.1	180	56.9	329	754	468	147	71.2	42.4	27.5	19.7	17.6
MAX	138	1,100	84	1,420	2,290	1,160	233	97	54	34	23	18
MIN	8.9	15	42	38	215	247	100	53	34	22	17	17
AC-FT	1,610	10,710	3,500	20,220	41,860	28,780	8,770	4,380	2,520	1,690	1,210	1,050

CAL YR 1972 TOTAL 14,775.6 MEAN 40.4 MAX 1,100 MIN 5.7 AC-FT 29,310
WTR YR 1973 TOTAL 63,677.1 MEAN 174 MAX 2,290 MIN 8.9 AC-FT 126,300

PEAK DISCHARGE (BASE, 700 CFS)

DATE	TIME	G.H.	DISCHARGE	DATE	TIME	G.H.	DISCHARGE
11-15	2145	6.61	1,470	2-7	1015	5.73	918
1-16	1315	7.93	2,440	2-11	0715	8.36	2,790
1-18	1415	7.03	1,760	2-28	0645	6.95	1,800

11143200 CARMEL RIVER AT ROBLES DEL RIO, CALIF.

LOCATION.--Lat 36°28'28", long 121°43'40", in Los Laureles Grant, Monterey County, on downstream side of county road bridge at Robles del Rio, 0.2 mile downstream from Hitchcock Canyon, and 11 miles southeast of town of Carmel.

DRAINAGE AREA.--193 sq mi.

PERIOD OF RECORD.--August 1957 to current year.

GAGE.--Water-stage recorder. Altitude of gage is 270 ft (from topographic map).

AVERAGE DISCHARGE (unadjusted).--16 years, 74.9 cfs (54,260 acre-ft per year).

EXTREMES.--Current year: Maximum discharge, 3,110 cfs Feb. 11 (gage height, 9.09 ft); no flow many days.
Period of record: Maximum discharge, 7,100 cfs Apr. 2, 1958 (gage height, 10.50 ft); no flow at times in each year.
Flood of Dec. 23, 1955, reached a stage of 11.7 ft, from floodmarks (discharge, 6,930 cfs by slope-area measurement of peak flow).

REMARKS.--Records good. Flow regulated by Los Padres Reservoir 11 miles upstream (capacity, 3,000 acre-ft) and San Clemente Reservoir 4 miles upstream (capacity, 2,150 acre-ft). Diversion from San Clemente Reservoir for municipal supply amounted to 7,890 acre-ft for the current year.

REVISIONS.--WSP 1715: Drainage area.

DISCHARGE, IN CUBIC FEET PER SECOND, WATER YEAR OCTOBER 1972 TO SEPTEMBER 1973

DAY	OCT	NOV	DEC	JAN	FEB	MAR	APR	MAY	JUN	JUL	AUG	SEP
1		0	25	35	188	996	276	88	16	2.6	.21	
2		0	21	34	168	795	261	86	16	2.0	.25	
3		0	21	34	170	700	246	82	15	3.1	.28	
4		0	29	35	223	785	237	81	15	3.1	.23	
5		0	34	32	220	650	220	82	15	3.1	.25	
6		0	39	29	772	614	209	79	12	2.6	.36	
7		0	54	26	1,210	558	201	75	9.7	2.0	.36	
8		0	54	30	840	602	193	74	7.9	2.0	.36	
9		0	48	321	650	518	188	71	7.9	2.6	.25	
10		0	44	474	1,260	478	180	67	7.0	2.5	.36	
11		0	41	229	2,280	514	172	66	7.0	1.6	.28	
12		0	38	168	1,590	456	165	64	6.1	3.1	.32	
13		0	37	135	1,480	421	162	63	6.1	2.6	.32	
14		20	36	115	1,260	393	162	60	6.1	2.6	.32	
15		63	35	101	1,070	365	150	59	5.3	2.6	.32	
16		294	34	542	875	340	139	57	8.9	2.0	.25	
17		204	35	900	625	324	144	55	7.0	1.0	.23	
18		119	39	1,250	606	309	139	54	6.1	.80	.21	
19		84	40	1,220	518	351	139	54	4.5	1.6	.18	
20		64	42	755	452	630	135	53	3.7	2.0	.13	
21		53	43	526	400	526	122	54	4.5	1.6	.11	
22		45	44	362	362	510	111	53	9.7	2.0	.07	
23		40	44	264	324	456	115	51	12	1.1	.07	
24		37	43	214	438	424	111	50	13	.80	.05	
25		35	44	198	372	400	107	50	12	.28	.02	
26		39	44	175	418	379	103	49	7.9	.21	.01	
27		41	43	153	845	358	99	48	4.5	.19	0	
28		34	44	137	1,480	337	99	47	3.7	.25	0	
29		29	39	165	------	318	93	55	2.6	.28	0	
30		25	37	243	------	306	91	48	3.1	.25	0	
31		------	36	212	------	294	------	17	------	.23	0	------
TOTAL	0	1,226	1,207	9,114	21,096	15,107	4,769	1,892	255.3	52.69	5.80	0
MEAN	0	40.9	38.9	294	753	487	159	61.0	8.51	1.70	.19	0
MAX	0	294	54	1,250	2,280	996	276	88	16	3.1	.36	0
MIN	0	0	21	26	168	294	91	17	2.6	.19	0	0
AC-FT	0	2,430	2,390	18,080	41,840	29,960	9,460	3,750	506	105	12	0

CAL YR 1972 TOTAL 5,499.59 MEAN 15.0 MAX 294 MIN 0 AC-FT 10,910
WTR YR 1973 TOTAL 54,724.79 MEAN 150 MAX 2,280 MIN 0 AC-FT 108,500

PEAK DISCHARGE (BASE, 1,000 CFS)

DATE	TIME	G.H.	DISCHARGE	DATE	TIME	G.H.	DISCHARGE
1-18	1545	7.85	1,860	2-11	0530	9.09	3,110
2-7	0245	7.23	1,390	2-28	0145	8.03	2,030

11143250 CARMEL RIVER NEAR CARMEL, CALIF.

LOCATION.--Lat 36°32'20", long 121°52'25", in Canada de la Segunda Grant, Monterey County, on right bank 0.3 mile downstream from Potrero Canyon, and 3 miles east of Carmel.

DRAINAGE AREA.--246 sq mi.

PERIOD OF RECORD.--August 1962 to current year.

GAGE.--Water-stage recorder. Altitude of gage is 45 ft (from topographic map).

AVERAGE DISCHARGE (unadjusted).--11 years, 99.0 cfs (71,730 acre-ft per year).

EXTREMES.--Current year: Maximum discharge, 5,520 cfs Feb. 11 (gage height, 12.34 ft); no flow many days. Period of record: Maximum discharge, 8,620 cfs Jan. 26, 1969 (gage height, 17.30 ft in gage well, 17.4 ft, from floodmarks); no flow at times in each year.

REMARKS.--Records good except those for period of no gage-height record, which are fair. Flow regulated by Los Padres Reservoir (capacity, 3,000 acre-ft) and San Clemente Reservoir (capacity, 2,150 acre-ft). Diversion from San Clemente Reservoir for municipal supply amounted to 7,890 acre-ft for the current year.

REVISIONS (WATER YEARS).--WRD Calif. 1969: 1967(M).

DISCHARGE, IN CUBIC FEET PER SECOND, WATER YEAR OCTOBER 1972 TO SEPTEMBER 1973

DAY	OCT	NOV	DEC	JAN	FEB	MAR	APR	MAY	JUN	JUL	AUG	SEP
1		0	1.7	36	303	1,300	360	103	13	.90	.16	.21
2		0	2.8	36	273	1,040	340	99	13	.66	.16	.16
3		0	4.4	36	261	907	320	98	12	.82	.16	.13
4		0	7.4	36	326	1,190	307	96	12	.90	.16	.16
5		0	16	34	321	965	289	93	12	.90	.21	.15
6		0	24	31	939	913	269	88	11	.72	.16	.14
7		0	57	30	1,530	828	252	85	8.6	.58	.13	.09
8		0	73	31	1,000	959	248	80	6.4	.62	.13	.07
9		0	61	188	774	792	232	76	6.4	.75	.13	.07
10		0	52	606	1,600	710	225	74	6.1	.48	.13	.07
11		0	43	352	3,830	828	217	69	5.7	.48	.09	.07
12		0	42	268	2,090	715	202	66	5.1	.56	.07	.07
13		0	42	222	2,060	626	199	64	5.0	.48	.09	.07
14		0	39	190	1,750	569	199	60	4.8	.48	.09	.07
15		2.0	40	170	1,570	521	187	55	4.4	.48	.13	.05
16		113	37	840	1,420	482	174	55	6.4	.39	.13	.05
17		184	40	1,270	1,080	454	170	53	5.4	.48	.07	.05
18		106	42	1,460	960	426	164	50	4.1	.48	.07	.05
19		64	48	1,450	830	479	164	50	2.4	.39	.07	.05
20		36	52	850	730	1,170	157	50	1.2	.32	.09	.05
21		25	50	642	650	798	146	50	1.6	.39	.13	.05
22		19	50	473	600	786	136	50	2.5	.39	.21	.05
23		13	50	390	620	675	137	49	4.0	.32	.21	.07
24		6.9	47	335	740	603	133	48	5.0	.26	.26	.07
25		2.4	43	314	780	557	127	47	5.6	.26	.48	.09
26		1.2	43	289	700	517	119	47	4.2	.26	.26	.09
27		2.8	42	259	1,800	489	118	46	2.0	.26	.26	.09
28		2.4	45	238	2,400	451	116	45	1.5	.26	.21	.09
29		2.4	42	253	------	419	111	49	1.1	.21	.16	.09
30		1.2	37	374	------	402	106	52	.84	.21	.16	.07
31		------	36	341	------	387	------	32	------	.26	.13	------
TOTAL	0	581.3	1,209.3	12,044	31,937	21,958	5,924	1,979	173.34	14.95	4.90	2.59
MEAN	0	19.4	39.0	389	1,141	708	197	63.8	5.78	.48	.16	.086
MAX	0	184	73	1,460	3,830	1,300	360	103	13	.90	.48	.21
MIN	0	0	1.7	30	261	387	106	32	.84	.21	.07	.05
AC-FT	0	1,150	2,400	23,890	63,350	43,550	11,750	3,930	344	30	9.7	5.1

CAL YR 1972 TOTAL 4,697.57 MEAN 12.8 MAX 196 MIN 0 AC-FT 9,320
WTR YR 1973 TOTAL 75,828.38 MEAN 208 MAX 3,830 MIN 0 AC-FT 150,400

PEAK DISCHARGE (BASE, 1,200 CFS)

DATE	TIME	G.H.	DISCHARGE	DATE	TIME	G.H.	DISCHARGE
1-18	2030	8.79	2,380	2-28	0400	--	2,500
2-7	0415	8.00	1,790	3-4	0915	7.44	1,360
2-11	0830	12.34	5,520	3-20	0330	7.88	1,710

NOTE.--No gage-height record May 19 to July 10.

11143300 ARROYO DEL REY AT DEL REY OAKS, CALIF.

LOCATION.--Lat 36°35'47", long 121°50'50", in Noche Buena Grant, Monterey County, on right bank at culvert on Rosita Avenue, at Del Rey Oaks and 1,000 ft upstream from State Highway 1.

DRAINAGE AREA.--14.3 sq mi.

PERIOD OF RECORD.--October 1966 to current year.

GAGE.--Water-stage recorder and concrete control. Altitude of gage is 15 ft (from topographic map).

AVERAGE DISCHARGE.--7 years, 0.80 cfs (580 acre-ft per year).

EXTREMES.--Current year: Maximum discharge, 60 cfs Mar. 20 (gage height, 4.15 ft), from rating curve extended above 26 cfs; no flow many days.
Period of record: Maximum discharge, 60 cfs Feb. 24, 1969, Mar. 20, 1973, from rating curve extended above 26 cfs; maximum gage height, 4.15 ft Mar. 20, 1973; no flow at times.

REMARKS.--Records poor. No regulation or diversion above station.

REVISIONS (WATER YEARS).--WRD Calif. 1971: 1967.

DISCHARGE, IN CUBIC FEET PER SECOND, WATER YEAR OCTOBER 1972 TO SEPTEMBER 1973

DAY	OCT	NOV	DEC	JAN	FEB	MAR	APR	MAY	JUN	JUL	AUG	SEP
1	.06	.04	.28	.17	1.8	2.5	1.3	.22	.13	.06	.03	0
2	.06	.04	.25	.16	1.2	.68	1.3	.20	.06	.06	.07	.06
3	.06	.04	.22	.15	1.3	2.0	1.2	.19	.03	.06	.09	0
4	.06	.52	.19	.14	1.8	23	.98	.17	.06	.03	.09	.06
5	.06	.05	.17	.14	1.7	6.4	.98	.16	.06	.03	.13	.06
6	.06	.05	3.0	.18	11	7.4	.75	.15	.06	.06	.13	.06
7	.05	.08	2.7	.18	6.0	10	.67	.14	.10	.06	.13	.01
8	.04	.06	2.2	1.5	4.0	24	.49	.13	.13	.06	.13	.02
9	.06	.05	1.8	5.6	3.0	15	.49	.13	.09	.06	.13	.02
10	.09	2.0	1.6	4.3	6.3	14	.49	.13	.22	.06	.22	.03
11	.08	7.4	1.3	3.3	30	32	.39	.22	.22	.06	.13	.06
12	.11	3.7	1.2	3.0	14	24	.45	.22	.13	.06	.60	.06
13	.06	4.7	1.0	3.0	18	19	.90	.22	.22	.06	0	.06
14	1.1	10	.86	3.0	20	16	.90	.13	.09	.06	0	.06
15	.09	9.0	.76	2.8	16	14	1.2	.13	.13	.06	0	.06
16	1.3	6.7	.68	5.9	11	13	1.6	.13	.09	.09	0	.06
17	.11	5.2	.60	8.0	8.6	14	1.4	.13	.06	.09	0	.06
18	.07	4.0	.54	12	6.8	12	.80	.09	.06	.13	0	.06
19	.06	3.1	.48	8.4	6.0	19	.70	.09	.06	.13	0	.06
20	.06	2.4	.43	4.4	6.0	28	.61	.39	.06	.13	0	.06
21	.05	1.8	.39	3.2	4.6	4.9	.54	.06	.06	.22	0	.06
22	.05	1.5	.36	2.2	3.1	3.8	.47	.06	.06	.98	0	.06
23	.05	1.2	.33	1.7	3.1	2.4	.43	.06	.09	.13	0	.06
24	.04	.94	.29	1.3	3.8	2.6	.38	.06	.06	.06	0	.06
25	.04	.78	.27	3.0	2.2	2.8	.35	.03	.06	.06	0	.06
26	.04	.64	.25	2.6	8.9	2.8	.32	.02	.06	.06	0	.03
27	.04	.53	.23	1.6	19	2.8	.29	.02	.06	.06	0	.03
28	.04	.45	.22	1.2	18	1.8	.27	.02	.06	.06	0	.03
29	.04	.38	.20	1.5	------	1.7	.25	.03	.06	.06	0	.06
30	.04	.33	.19	4.4	------	1.7	.24	.06	.06	.06	0	.06
31	.04	------	.18	2.6	------	1.5	------	.13	------	.03	.02	------
TOTAL	4.11	67.68	23.17	91.62	237.2	324.78	21.14	3.92	2.69	3.19	1.90	1.43
MEAN	.13	2.26	.75	2.96	8.47	10.5	.70	.13	.090	.10	.061	.048
MAX	1.3	10	3.0	12	30	32	1.6	.39	.22	.98	.60	.06
MIN	.04	.04	.17	.14	1.2	.68	.24	.02	.03	.03	0	0
AC-FT	8.2	134	46	182	470	644	42	7.8	5.3	6.3	3.8	2.8

CAL YR 1972 TOTAL 117.13 MEAN .32 MAX 10 MIN .01 AC-FT 232
WTR YR 1973 TOTAL 782.83 MEAN 2.14 MAX 32 MIN 0 AC-FT 1,550

PEAK DISCHARGE (BASE, 18 CFS, REVISED)

DATE	TIME	G.H.	DISCHARGE	DATE	TIME	G.H.	DISCHARGE
2-6	1415	2.93	18	3-8	0645	3.70	34
2-11	0745	3.80	47	3-11	1130	3.70	34
2-28	0015	3.76	37	3-20	0145	4.15	60
3-4	0530	3.64	30				

NOTE.--No gage-height record Nov. 17 to Jan. 15, Apr. 18 to May 18.

11143500 SALINAS RIVER NEAR POZO, CALIF.

LOCATION.--Lat 35°17'55", long 120°24'10", in NE¼ sec.19, T.30 S., R.15 E., San Luis Obispo County, on right bank at downstream side of county road bridge, 1.0 mile downstream from Pozo Creek, 1.6 miles west of Pozo, and 7.4 miles upstream from Salinas Dam.

DRAINAGE AREA.--70.3 sq mi.

PERIOD OF RECORD.--July 1942 to current year.

GAGE.--Water-stage recorder. Datum of gage is 1,347.78 ft above mean sea level. Prior to May 13, 1969, water-stage recorder at site 0.4 mile downstream at same datum. May 13 to July 28, 1969, nonrecording gage at bridge at datum 4.56 ft higher.

AVERAGE DISCHARGE.--31 years, 17.7 cfs (12,820 acre-ft per year).

EXTREMES.--Current year: Maximum discharge, 8,920 cfs Feb. 11 (gage height, 17.15 ft), from rating curve extended above 510 cfs; minimum daily, 0.01 cfs Oct. 7.
Period of record: Maximum discharge, 18,600 cfs Jan. 25, 1969 (gage height, 13.90 ft in gage well, 15.5 ft, site then in use, from floodmarks), from rating curve extended above 7,100 cfs on basis of slope-area measurement of maximum flow; no flow at times.

REMARKS.--Records poor. No regulation or diversion above station. Water is stored in Santa Margarita Lake below station. Records of chemical analyses for the current year are published in Part 2 of this report.

REVISIONS (WATER YEARS).--WSP 1565: 1943(M).

DISCHARGE, IN CUBIC FEET PER SECOND, WATER YEAR OCTOBER 1972 TO SEPTEMBER 1973

DAY	OCT	NOV	DEC	JAN	FEB	MAR	APR	MAY	JUN	JUL	AUG	SEP
1	.03	.49	1.7	1.3	8.3	182	40	5.3	3.0	.66	.66	.66
2	.12	.49	1.5	1.3	9.6	108	37	5.1	3.0	1.1	.66	1.1
3	.19	.52	1.3	1.3	11	83	34	4.9	2.0	1.1	.66	.66
4	.19	.66	1.5	1.3	31	82	31	4.8	1.5	1.1	.66	1.1
5	.12	.79	1.3	1.3	45	89	26	4.7	1.5	.66	.66	1.1
6	.07	.95	1.9	1.5	128	95	20	4.6	1.1	1.1	.66	1.1
7	.01	.74	1.9	1.5	302	100	18	4.4	1.1	1.1	.66	.66
8	.12	.71	1.7	1.7	145	110	16	4.3	.66	1.1	.66	.66
9	.23	.70	1.7	4.0	70	96	15	4.1	.50	.66	.50	.50
10	.46	.82	1.5	2.3	1,080	86	14	3.9	.66	.66	.50	.50
11	.46	1.4	1.5	2.1	3,090	130	13	3.8	.66	.66	.30	.66
12	.62	2.7	1.5	1.9	650	110	12	3.7	1.1	.66	.30	.50
13	.85	1.9	1.5	1.7	485	100	12	3.6	1.1	1.1	.50	.50
14	.77	1.6	1.5	1.7	258	91	12	3.5	1.1	1.1	.30	.50
15	.66	5.8	1.5	1.7	165	80	11	3.4	1.1	1.1	.30	.50
16	.95	4.0	1.5	106	95	72	11	3.4	1.1	1.1	.30	2.5
17	1.1	3.2	1.5	47	76	65	10	3.3	1.5	1.1	.50	6.5
18	1.1	2.8	1.5	1,140	57	62	10	3.2	.66	.66	.30	5.4
19	.86	2.5	1.5	278	45	92	9.6	3.1	.66	.66	.50	3.6
20	.74	2.0	1.5	70	40	430	8.6	3.0	.66	.66	.30	2.5
21	.78	1.9	1.5	42	37	315	7.1	2.9	.50	1.1	.30	2.5
22	.89	1.8	1.5	29	31	220	5.8	2.9	.50	1.1	.30	2.5
23	.70	1.8	1.5	22	26	140	7.7	2.8	.50	.66	.66	2.0
24	.62	1.8	1.5	21	29	100	7.2	2.8	.66	.66	.66	2.5
25	.59	1.8	1.5	18	27	80	7.0	2.7	.66	.66	1.1	4.2
26	.56	1.8	1.5	15	30	68	6.7	2.6	.50	.66	1.5	3.6
27	.54	1.8	1.5	11	110	60	6.4	2.6	.50	.50	1.1	2.5
28	.52	1.7	1.5	9.6	745	54	6.1	2.5	1.1	1.1	1.1	1.5
29	.51	1.7	1.5	9.6	------	49	5.8	2.5	.66	1.1	.66	1.5
30	.50	1.7	1.3	10	------	46	5.5	2.4	.66	.66	.66	2.0
31	.50	------	1.3	7.1	------	43	------	2.5	------	.66	.66	------
TOTAL	16.36	52.57	47.1	1,861.9	7,825.9	3,438	425.5	109.3	30.90	26.90	18.58	56.00
MEAN	.53	1.75	1.52	60.1	279	111	14.2	3.53	1.03	.87	.60	1.87
MAX	1.1	5.8	1.9	1,140	3,090	430	40	5.3	3.0	1.1	1.5	6.5
MIN	.01	.49	1.3	1.3	8.3	43	5.5	2.4	.50	.50	.30	.50
AC-FT	32	104	93	3,690	15,520	6,820	844	217	61	53	37	111

CAL YR 1972 TOTAL 458.82 MEAN 1.25 MAX 6 MIN 0 AC-FT 910
WTR YR 1973 TOTAL 13,909.01 MEAN 38.1 MAX 3,090 MIN .01 AC-FT 27,590

PEAK DISCHARGE (BASE, 300 CFS)

DATE	TIME	G.H.	DISCHARGE	DATE	TIME	G.H.	DISCHARGE
1-18	1630	16.67	7,310	2-28	0545	13.94	1,600
2-7	0915	12.36	390	3-20	unknown	--	unknown
2-11	0615	17.15	8,920				

NOTE.--No gage-height record Oct. 10 to Nov. 27, Apr. 11 to May 30.

11144000 TORO CREEK NEAR POZO, CALIF.

LOCATION.--Lat 35°19'26", long 120°25'13", in SE¼ sec.12, T.30 S., R.14 E., San Luis Obispo County, on left bank 300 ft upstream from mouth, and 3 miles northwest of Pozo.

DRAINAGE AREA.--9.56 sq mi.

PERIOD OF RECORD.--June 1942 to September 1969, October 1971 to current year. Prior to October 1961 low-water records only. Monthly discharge only for some periods, published in WSP 1315-B.

GAGE.--Water-stage recorder and concrete control. Datum of gage is 1,312.99 ft above mean sea level. Prior to Dec. 8, 1961, at site 250 ft downstream at datum 11.83 ft lower.

AVERAGE DISCHARGE.--10 years (1961-69, 1970-73), 0.86 cfs (623 acre-ft per year).

EXTREMES.--Current year: Maximum discharge, 107 cfs Feb. 11 (gage height, 4.90 ft, from reconstructed graph), from rating curve extended above 7.4 cfs as explained below; minimum daily, 0.03 cfs Oct. 8, 9, Aug. 17, 18, Aug. 20.

Period of record: Maximum discharge, 2,400 cfs Feb. 24, 1969 (gage height, 8.3 ft, from floodmarks), from rating curve extended above 30 cfs on basis of slope-area measurements at gage heights 5.11 and 7.3 ft; no flow at times.

REMARKS.--Records fair. Small diversions above station for irrigation and stock reservoir.

DISCHARGE, IN CUBIC FEET PER SECOND, WATER YEAR OCTOBER 1972 TO SEPTEMBER 1973

DAY	OCT	NOV	DEC	JAN	FEB	MAR	APR	MAY	JUN	JUL	AUG	SEP
1	.06	.35	.49	.42	.69	2.5	1.6	.69	.42	.22	.16	.29
2	.22	.35	.49	.42	.69	2.0	1.6	.59	.35	.27	.23	.29
3	.16	.35	.49	.42	.69	1.7	1.5	1.2	.12	.29	.29	.29
4	.16	.59	.45	.35	.80	2.0	1.5	.59	.22	.29	.22	.28
5	.16	.42	1.1	.35	.92	1.7	1.3	.92	.12	.22	.35	.24
6	.12	.42	5.4	.29	2.2	2.1	1.3	.80	.42	.12	.42	.26
7	.12	.42	.69	.35	2.3	1.7	1.5	.69	.22	.12	.42	.40
8	.03	.42	.80	.97	1.5	2.1	1.5	.69	.29	.08	.42	.24
9	.03	.49	.49	1.2	1.3	1.7	1.5	.59	.16	.29	.49	.13
10	.22	.92	.49	.69	8.8	1.6	1.5	.80	.22	.06	.42	.16
11	.16	1.6	.49	.59	27	2.5	.69	.80	.29	.04	.49	.33
12	.35	.69	.49	.59	4.3	1.5	.69	.69	.35	.12	.49	.51
13	.29	.92	.49	.59	3.7	1.3	2.1	.49	.12	.04	.42	.28
14	.35	6.4	.49	.59	2.5	1.3	1.6	.80	.16	.22	.35	.21
15	.80	2.0	.49	.59	2.0	1.2	1.2	.69	.16	.12	.16	.31
16	.42	1.3	.49	4.8	1.6	1.2	.69	.69	.29	.16	.06	.40
17	.22	.92	.49	1.3	1.3	1.2	.92	.59	.42	.16	.03	.15
18	.42	.80	.49	21	1.3	1.0	1.0	.49	.42	.22	.03	.09
19	.29	.69	.59	7.3	1.2	1.0	1.0	.59	.35	.12	.08	.20
20	.35	.69	.59	3.5	1.2	10	.92	.35	.29	.29	.03	.14
21	.35	.69	.59	1.7	1.2	3.9	.92	.35	.16	.16	.08	.18
22	.29	.69	.59	1.3	1.2	2.7	.92	.59	.12	.12	.08	.31
23	.48	.69	.59	1.0	1.2	2.3	.59	.42	.08	.35	.06	.18
24	.29	.59	.49	1.0	1.9	2.1	.49	.49	.12	.22	.22	.11
25	.29	.59	.49	1.2	1.3	2.1	.42	.49	.22	.04	.16	.16
26	.29	.59	.49	1.0	2.0	2.0	.49	.49	.22	.08	.35	.15
27	.22	.59	.49	.92	5.8	2.0	.59	.42	.12	.08	.29	.13
28	.22	.59	.42	.69	9.2	1.7	.59	.42	.08	.12	.29	.13
29	.29	.59	.42	.59	------	1.7	.80	.35	.12	.12	.12	.15
30	.29	.35	.42	.69	------	1.7	.69	.35	.29	.08	.22	.15
31	.35	------	.35	.69	------	1.7	------	.42	------	.16	.35	------
TOTAL	8.29	26.70	21.33	57.09	89.79	65.2	32.11	18.53	6.92	4.98	7.78	6.85
MEAN	.27	.89	.69	1.84	3.21	2.10	1.07	.60	.23	.16	.25	.23
MAX	.80	6.4	5.4	21	27	10	2.1	1.2	.42	.35	.49	.51
MIN	.03	.35	.35	.29	.69	1.0	.42	.35	.08	.04	.03	.09
AC-FT	16	53	42	113	178	129	64	37	14	9.9	15	14

CAL YR 1972 TOTAL 151.37 MEAN .41 MAX 6.4 MIN .01 AC-FT 300
WTR YR 1973 TOTAL 345.57 MEAN .95 MAX 27 MIN .03 AC-FT 685

PEAK DISCHARGE (BASE, 15 CFS)

DATE	TIME	G.H.	DISCHARGE	DATE	TIME	G.H.	DISCHARGE
11-14	0430	4.42	43	2-11	0600	4.90	107
1-16	1500	4.25	24	2-28	0215	4.26	25
1-18	1430	4.54	50	3-20	0230	4.26	25

11144200 SALSIPUEDES CREEK NEAR POZO, CALIF.

LOCATION.--Lat 35°17'34", long 120°27'07", in NW¼SW¼ sec.23, T.30 S., R.14 E., San Luis Obispo County, on left bank 1.9 miles upstream from mouth, and 4.4 miles west of Pozo.

DRAINAGE AREA.--5.91 sq mi.

PERIOD OF RECORD.--October 1969 to current year.

GAGE.--Water-stage recorder and concrete control. Altitude of gage is 1,480 ft (from topographic map).

EXTREMES.--Current year: Maximum discharge, 1,010 cfs Jan. 18 (gage height, 4.58 ft), from rating curve extended as explained below; no flow for long periods.
Period of record: Maximum discharge, 1,010 cfs Jan. 18, 1973 (gage height, 4.58 ft), from rating curve extended above 67 cfs on basis of slope-area measurement of maximum flow; no flow for long periods in each year.

REMARKS.--Records good except those for period of no gage-height record, which are poor.

REVISIONS (WATER YEARS).--WRD Calif. 1972: 1970-71(P).

DISCHARGE, IN CUBIC FEET PER SECOND, WATER YEAR OCTOBER 1972 TO SEPTEMBER 1973

DAY	OCT	NOV	DEC	JAN	FEB	MAR	APR	MAY	JUN	JUL	AUG	SEP
1		0	.03	.04	.40	35	3.4	.62	.10	.01	.07	
2		0	.04	.04	.34	24	3.4	.55	.09	0	.10	
3		0	.10	.04	1.1	20	3.2	.55	.09	0	.09	
4		0	.25	.04	5.4	19	3.2	.49	.12	0	.08	
5		0	.45	.05	2.8	15	3.1	.49	.09	0	.07	
6		0	.80	.05	16	28	3.0	.49	.09	0	.05	
7		0	2.3	.06	25	19	2.7	.44	.08	0	.03	
8		0	1.5	.08	10	23	2.4	.39	.08	.03	0	
9		0	.80	.10	5.8	16	2.2	.34	.07	.03	0	
10		0	.40	3.0	125	14	2.2	.30	.06	0	0	
11		.02	.26	8.2	183	21	2.0	.26	.08	0	0	
12		0	.16	2.9	69	15	1.8	.23	.07	0	0	
13		.01	.08	2.5	48	13	1.8	.23	.07	0	0	
14		15	.07	2.3	29	12	1.6	.26	.06	0	0	
15		9.2	.05	3.0	18	10	1.6	.26	.07	0	0	
16		7.4	.05	14	10	9.2	1.5	.23	.06	.02	0	
17		3.7	.04	20	7.0	8.8	1.5	.20	.05	0	0	
18		.49	.04	100	5.3	8.0	1.4	.23	.04	0	0	
19		.14	.04	35	4.5	10	1.2	.23	.06	0	0	
20		.08	.04	22	3.7	55	1.2	.23	.04	0	0	
21		.06	.04	6.0	3.3	26	1.1	.23	.03	0	0	
22		.05	.04	2.9	2.9	19	1.0	.20	.03	0	0	
23		.04	.04	2.3	2.7	14	1.0	.20	.03	0	0	
24		.03	.04	1.7	6.7	11	.90	.20	.03	0	0	
25		.03	.04	1.1	3.3	9.2	.90	.18	.03	0	0	
26		.03	.04	.80	5.8	7.6	.80	.16	.03	0	0	
27		.03	.04	.58	86	5.9	.70	.12	.03	0	0	
28		.03	.04	.49	142	5.0	.70	.10	.03	0	0	
29		.03	.04	.58	------	4.2	.70	.10	.02	0	0	
30		.03	.04	.96	------	3.6	.70	.09	.01	0	0	
31		------	.04	.49	------	3.4	------	.10	------	.01	0	------
TOTAL	0	36.40	7.94	231.30	822.04	483.9	52.90	8.70	1.74	.10	.49	0
MEAN	0	1.21	.26	7.46	29.4	15.6	1.76	.28	.058	.003	.016	0
MAX	0	15	2.3	100	183	55	3.4	.62	.12	.03	.10	0
MIN	0	0	.03	.04	.34	3.4	.70	.09	.01	0	0	0
AC-FT	0	72	16	459	1,630	960	105	17	3.5	.2	1.0	0

CAL YR 1972 TOTAL 60.22 MEAN .16 MAX 15 MIN 0 AC-FT 119
WTR YR 1973 TOTAL 1,645.51 MEAN 4.51 MAX 183 MIN 0 AC-FT 3,260

PEAK DISCHARGE (BASE, 25 CFS)

DATE	TIME	G.H.	DISCHARGE	DATE	TIME	G.H.	DISCHARGE
11-14	0545	2.21	120	2-24	0645	1.38	26
1-18	1430	4.58	1,010	2-27	2400	3.75	578
2-6	1515	1.61	44	3-6	1345	2.05	98
2-11	0600	3.67	543	3-20	0245	2.13	109

NOTE.--No gage-height record Nov. 21 to Jan. 21.

11144500 SANTA MARGARITA LAKE NEAR POZO, CALIF.

LOCATION.--Lat 35°20'14", long 120°30'08", in NW¼NW¼ sec.8, T.30 S., R.14 E., San Luis Obispo County, at left end of dam on Salinas River, 2 miles upstream from Pilitas Creek, and 7.5 miles northwest of Pozo.

DRAINAGE AREA.--112 sq mi.

PERIOD OF RECORD.--December 1941 to current year. Prior to October 1967, published as Salinas Reservoir near Pozo.

GAGE.--Water-stage recorder. Datum of gage is at mean sea level (levels by Corps of Engineers). Prior to Mar. 9, 1942, nonrecording gage at same site and datum.

EXTREMES.--Current year: Maximum contents, 27,900 acre-ft Feb. 11 (elevation, 1,303.42 ft); minimum, 10,900 acre-ft Jan. 5-7.
Period of record: Maximum contents, 37,000 acre-ft Jan. 25, 1969 (elevation, 1,313.30 ft); minimum, 1,730 acre-ft Nov. 6-10, 1943.

REMARKS.--Reservoir is formed by concrete-arch dam, outlet closed Dec. 6, 1941. Usable capacity, 26,000 acre-ft between elevations 1,220.3 (bottom of outlet pipe) and 1,301.0 ft (spillway crest) above mean sea level. Water diverted at dam into pipeline to small reservoir 10 miles below, from which it is pumped to Camp San Luis Obispo and city of San Luis Obispo for water supply; water is also released down natural channel of river. Figures given herein represent usable contents.

REVISIONS.--WSP 1715: Drainage area.

CAPACITY TABLE (ELEVATION, IN FEET, AND CONTENTS, IN ACRE-FEET)

1,220.3	0	1,245	2,100	1,270	8,650	1,295	21,700
1,225	210	1,250	3,000	1,275	10,600	1,300	25,200
1,230	510	1,255	4,100	1,280	12,800	1,310	33,700
1,235	880	1,260	5,400	1,285	15,300	1,320	44,400
1,240	1,400	1,265	6,900	1,290	18,300	1,325	50,400

CONTENTS, IN ACRE-FEET, AT 2400, WATER YEAR OCTOBER 1972 TO SEPTEMBER 1973

DAY	OCT	NOV	DEC	JAN	FEB	MAR	APR	MAY	JUN	JUL	AUG	SEP
1	11,900	11,400	11,100	11,000	18,300	26,500	26,000	25,900	25,200	24,100	22,900	21,700
2	11,900	11,300	11,100	11,000	18,400	26,000	25,900	25,900	25,100	24,100	22,900	21,700
3	11,800	11,300	11,100	11,000	18,400	25,900	25,900	25,900	25,100	24,100	22,900	21,700
4	11,800	11,300	11,100	11,000	18,500	25,900	25,900	25,900	25,100	24,000	22,800	21,700
5	11,800	11,300	11,100	10,900	18,600	25,900	25,900	25,900	25,000	24,000	22,800	21,700
6	11,800	11,300	11,100	10,900	18,900	26,100	26,000	25,800	25,000	23,900	22,800	21,700
7	11,700	11,300	11,100	10,900	19,800	25,900	26,000	25,800	25,000	23,900	22,700	21,600
8	11,700	11,200	11,100	11,000	20,300	25,900	26,000	25,800	24,900	23,900	22,700	21,600
9	11,700	11,200	11,100	11,000	20,600	25,900	26,000	25,800	24,900	23,800	22,600	21,600
10	11,700	11,200	11,100	11,100	23,200	26,000	26,000	25,800	24,900	23,800	22,600	21,500
11	11,700	11,300	11,100	11,100	27,900	25,900	26,000	25,700	24,800	23,800	22,600	21,500
12	11,600	11,200	11,100	11,100	27,400	25,900	26,000	25,700	24,800	23,700	22,500	21,500
13	11,600	11,200	11,100	11,100	27,000	26,000	26,000	25,700	24,800	23,700	22,500	21,400
14	11,600	11,400	11,100	11,100	26,500	25,900	26,000	25,700	24,700	23,600	22,500	21,400
15	11,600	11,500	11,100	11,100	26,100	25,900	26,000	25,700	24,700	23,600	22,400	21,400
16	11,600	11,500	11,100	11,900	26,700	25,900	26,000	25,600	24,700	23,500	22,400	21,400
17	11,600	11,400	11,100	12,200	26,100	26,000	26,000	25,600	24,600	23,500	22,400	21,300
18	11,600	11,300	11,100	16,600	26,000	26,000	26,000	25,600	24,600	23,500	22,300	21,300
19	11,600	11,200	11,100	17,500	26,000	26,100	26,000	25,600	24,600	23,400	22,300	21,300
20	11,600	11,200	11,000	17,800	26,000	26,700	26,000	25,500	24,500	23,400	22,200	21,200
21	11,600	11,200	11,000	18,000	26,000	26,600	26,000	25,500	24,500	23,300	22,200	21,200
22	11,500	11,200	11,000	18,000	26,000	26,300	26,000	25,500	24,500	23,300	22,200	21,200
23	11,500	11,200	11,000	18,000	26,000	26,000	26,000	25,400	24,400	23,300	22,100	21,100
24	11,500	11,200	11,000	18,100	26,000	26,000	26,000	25,400	24,400	23,200	22,100	21,100
25	11,500	11,200	11,000	18,200	26,000	25,900	26,000	25,400	24,400	23,200	22,100	21,000
26	11,500	11,200	11,000	18,200	26,000	26,000	26,000	25,300	24,300	23,200	22,000	21,000
27	11,400	11,200	11,000	18,200	26,500	26,000	26,000	25,300	24,300	23,100	22,000	21,000
28	11,400	11,100	11,000	18,300	27,100	26,000	25,900	25,300	24,200	23,100	22,000	20,900
29	11,400	11,100	11,000	18,300	------	25,900	25,900	25,300	24,200	23,000	21,900	20,900
30	11,400	11,100	11,000	18,300	------	26,000	25,900	25,200	24,200	23,000	21,800	20,900
31	11,400	------	11,000	18,300	------	26,000	------	25,200	------	23,000	21,800	------
MAX	11,900	11,500	11,100	18,300	27,900	26,700	26,000	25,900	25,200	24,100	22,900	21,700
MIN	11,400	11,100	11,000	10,900	18,300	25,900	25,900	25,200	24,200	23,000	21,800	20,900
(a)	1,276.69	1,276.15	1,275.83	1,290.05	1,302.44	1,300.96	1,300.91	1,299.97	1,298.54	1,296.80	1,295.23	1,293.80
(b)	-500	-300	-100	+7,300	+8,800	-1,100	-100	-700	-1,000	-1,200	-1,200	-900
(c)	430	318	328	340	243	213	364	554	600	634	598	536

CAL YR 1972 b -7,600 c 5,500
WTR YR 1973 b +9,000 c 5,160

a Elevation, in feet, at end of month.
b Change in contents, in acre-feet.
c Diversion, in acre-feet, for municipal supply; furnished by county of San Luis Obispo.

11145000 SALINAS RIVER ABOVE PILITAS CREEK, NEAR SANTA MARGARITA, CALIF.

LOCATION.--Lat 35°20'56", long 120°30'42", in SW¼NE¼ sec.6, T.30 S., R.14 E., San Luis Obispo County, on downstream side of right bank bridge pier, 200 ft upstream from Pilitas Creek, 2 miles downstream from Salinas Dam, and 6 miles southeast of Santa Margarita.

DRAINAGE AREA.--114 sq mi.

PERIOD OF RECORD.--July 1942 to current year.

GAGE.--Water-stage recorder and concrete control. Datum of gage is 1,148.66 ft above mean sea level.

AVERAGE DISCHARGE.--31 years, 18.6 cfs (13,480 acre-ft per year).

EXTREMES.--Current year: Maximum discharge, 1,640 cfs Feb. 11 (gage height, 4.33 ft); no flow for several days.
Period of record: Maximum discharge, 16,600 cfs Jan. 25, 1969 (gage height, 14.90 ft); no flow at times.

REMARKS.--Records good except those for period of backwater from beaver dams, which are poor. Flow regulated by Santa Margarita Lake 2 miles upstream beginning in 1941 and water diverted to Camp San Luis Obispo and city of San Luis Obispo (see sta 11144500). Records of chemical analyses for the current year are published in Part 2 of this report.

REVISIONS.--WSP 1715: Drainage area.

DISCHARGE, IN CUBIC FEET PER SECOND, WATER YEAR OCTOBER 1972 TO SEPTEMBER 1973

DAY	OCT	NOV	DEC	JAN	FEB	MAR	APR	MAY	JUN	JUL	AUG	SEP
1	0	.90	.34	.10	.62	664	56	.96	16	1.2	.25	.15
2	0	.90	.27	.10	.62	440	56	.96	11	2.0	.25	.20
3	0	.90	.21	.10	.71	228	44	.96	5.5	1.4	.25	.15
4	0	1.4	.27	.10	.90	172	29	.96	5.5	1.0	.20	.15
5	0	1.0	.21	.10	.82	119	40	.96	5.5	1.0	.20	.30
6	0	1.0	.34	.10	3.6	135	19	.96	6.7	1.0	.20	.30
7	0	.90	.34	.10	4.9	251	19	.96	6.7	1.0	.25	.30
8	0	.90	.34	.18	2.9	218	19	.96	6.1	.90	.20	.25
9	0	.90	.27	.39	2.0	172	19	.96	6.1	.90	.20	.30
10	0	1.4	.21	.53	24	119	19	.96	6.7	1.2	.20	.30
11	0	2.6	.21	.39	718	251	19	.96	6.7	1.5	.20	.30
12	0	1.4	.21	.34	1,070	168	19	.88	6.7	1.8	.20	.25
13	0	1.4	.18	.27	952	45	16	.88	7.3	1.8	.20	.66
14	0	6.1	.18	.21	628	168	2.6	.91	6.1	1.7	.20	.76
15	0	4.4	.18	.21	475	90	2.6	1.2	6.1	1.7	.20	.71
16	.03	51	.18	6.1	239	58	2.9	1.0	6.1	1.7	.20	.71
17	.27	78	.18	2.6	115	58	2.6	1.6	5.5	1.8	.20	.71
18	.46	63	.13	94	147	58	2.9	2.3	5.5	1.8	.15	.76
19	.53	16	.13	8.2	76	56	56	2.6	4.9	1.8	.30	.71
20	.46	2.6	.13	3.6	74	395	1.8	2.6	2.3	1.8	.25	.71
21	.53	.82	.13	2.3	41	530	1.0	2.9	2.3	1.9	.25	.71
22	.62	.82	.18	1.6	51	505	1.2	2.9	2.3	1.7	.25	.71
23	.62	.90	.13	1.2	38	370	1.4	2.9	2.6	1.8	.25	.76
24	.62	.90	.13	.90	80	221	1.4	2.6	2.6	1.8	.25	.71
25	.53	.82	.13	.90	34	172	1.0	2.6	2.9	.71	.25	.71
26	.53	.90	.13	.82	36	119	1.0	2.3	2.3	.71	.25	.71
27	.62	.90	.13	.71	224	99	1.0	2.0	2.3	.20	.25	.71
28	.82	.71	.13	.71	860	104	1.0	1.8	1.6	.20	.25	.71
29	.82	.62	.13	.71	------	86	1.0	1.8	1.0	.20	.25	.71
30	.82	.46	.13	.82	------	68	1.0	4.4	1.4	.25	.25	.71
31	.90	------	.10	.71	------	58	------	13	------	.21	.15	------
TOTAL	9.18	244.55	5.96	129.10	5,899.07	6,197	456.4	63.73	154.3	38.68	6.95	15.83
MEAN	.30	8.15	.19	4.16	211	200	15.2	2.06	5.14	1.25	.22	.53
MAX	.90	78	.34	94	1,070	664	56	13	16	2.0	.30	.76
MIN	0	.46	.10	.10	.62	45	1.0	.88	1.0	.20	.15	.15
AC-FT	18	485	12	256	11,700	12,290	905	126	306	77	14	31

CAL YR 1972 TOTAL 855.84 MEAN 2.34 MAX 299 MIN 0 AC-FT 1,700
WTR YR 1973 TOTAL 13,220.75 MEAN 36.2 MAX 1,070 MIN 0 AC-FT 26,220

NOTE.--Backwater from beaver dams Apr. 25 to Sept. 30.

11147000 JACK CREEK NEAR TEMPLETON, CALIF.

LOCATION.--Lat 35°34'00", long 120°48'10", in Paso de Robles Grant, San Luis Obispo County, on left bank 1.4 miles upstream from mouth, 1.8 miles northwest of Oakdale School, and 5.6 miles west of Templeton.

DRAINAGE AREA.--25.3 sq mi.

PERIOD OF RECORD.--October 1949 to current year.

GAGE.--Water-stage recorder. Altitude of gage is 980 ft (from topographic map).

AVERAGE DISCHARGE.--24 years, 14.5 cfs (10,510 acre-ft per year).

EXTREMES.--Current year: Maximum discharge, 4,070 cfs Jan. 18 (gage height, 8.90 ft), from rating curve extended as explained below; no flow many days.
Period of record: Maximum discharge, 8,160 cfs Feb. 24, 1969 (gage height, 11.28 ft), from rating curve extended above 1,500 cfs on basis of slope-area measurement at gage height 9.56 ft; no flow for several months in each year.

REMARKS.--Records good. No regulation; small diversions above station for irrigation.

REVISIONS (WATER YEARS).--WSP 1395: 1950(M), 1952, 1953(M).

DISCHARGE, IN CUBIC FEET PER SECOND, WATER YEAR OCTOBER 1972 TO SEPTEMBER 1973

DAY	OCT	NOV	DEC	JAN	FEB	MAR	APR	MAY	JUN	JUL	AUG	SEP
1		0	.44	.87	25	157	24	5.4	3.0	.55	.25	
2		0	.41	.87	22	99	22	5.2	3.0	.52	.25	
3		0	.41	.87	19	75	21	5.0	2.9	.55	.23	
4		0	2.6	.79	22	65	20	4.9	2.8	.52	.23	
5		0	1.7	.79	22	52	19	4.8	2.7	.49	.25	
6		0	1.7	.79	277	110	17	4.6	2.5	.48	.27	
7		0	8.6	.74	466	80	16	4.5	2.3	.48	.27	
8		0	9.4	1.8	182	93	15	4.1	2.1	.47	.27	
9		0	6.7	225	114	64	14	3.8	2.1	.42	.25	
10		0	5.0	107	548	53	14	3.7	2.2	.34	.25	
11		0	3.7	31	530	66	13	3.5	2.4	.33	.22	
12		0	3.3	19	358	54	12	3.5	2.4	.33	.20	
13		0	3.0	14	304	43	11	3.6	2.2	.33	.19	
14		100	2.6	11	187	38	11	3.6	2.3	.36	.17	
15		167	2.4	9.0	132	34	11	3.6	2.1	.36	.13	
16		106	2.2	570	99	30	11	3.4	2.0	.36	.08	
17		52	2.2	150	76	27	10	3.4	2.1	.36	.02	
18		14	1.9	1,170	59	25	9.5	3.3	1.9	.36	0	
19		6.7	1.7	198	48	82	8.9	3.3	1.6	.36	0	
20		3.5	1.5	82	41	331	8.4	3.3	1.3	.36	0	
21		2.2	1.5	48	36	198	8.1	3.3	1.1	.36	0	
22		1.3	1.3	34	31	136	7.7	3.3	1.1	.36	0	
23		.98	1.3	26	28	82	7.5	3.2	.97	.33	0	
24		.74	1.3	22	43	65	7.3	3.2	.86	.33	0	
25		.69	1.3	20	33	55	6.9	3.1	.73	.31	0	
26		.59	1.1	17	59	46	6.6	3.0	.65	.31	0	
27		.55	1.2	14	418	40	6.4	2.7	.60	.31	0	
28		.51	1.1	13	515	35	6.2	2.6	.56	.29	0	
29		.47	.98	20	------	32	6.3	2.4	.57	.29	0	
30		.44	.89	61	------	29	6.1	2.5	.56	.29	0	
31		------	.87	35	------	26	------	2.8	------	.27	0	------
TOTAL	0	457.67	74.30	2,903.52	4,694	2,322	356.9	112.6	53.60	11.78	3.53	0
MEAN	0	15.3	2.40	93.7	168	74.9	11.9	3.63	1.79	.38	.11	0
MAX	0	167	9.4	1,170	548	331	24	5.4	3.0	.55	.27	0
MIN	0	0	.41	.74	19	25	6.1	2.4	.56	.27	0	0
AC-FT	0	908	147	5,760	9,310	4,610	708	223	106	23	7.0	0

CAL YR 1972 TOTAL 847.09 MEAN 2.31 MAX 167 MIN 0 AC-FT 1,680
WTR YR 1973 TOTAL 10,989.90 MEAN 30.1 MAX 1,170 MIN 0 AC-FT 21,800

PEAK DISCHARGE (BASE, 600 CFS)

DATE	TIME	G.H.	DISCHARGE	DATE	TIME	G.H.	DISCHARGE
1-18	0945	8.90	4,070	2-27	2400	7.17	2,060
2-7	0145	5.23	730	3-20	0145	5.45	842
2-10	0530	6.58	1,560				

11147070 SANTA RITA CREEK NEAR TEMPLETON, CALIF.

LOCATION.--Lat 35°31'26", long 120°45'54", in Asuncion Grant, San Luis Obispo County, on left bank 1.6 miles upstream from mouth, and 4 miles west of Templeton.

DRAINAGE AREA.--18.2 sq mi.

PERIOD OF RECORD.--October 1961 to current year.

GAGE.--Water-stage recorder and rain gage. Altitude of gage is 860 ft (from topographic map). Auxiliary rain gage 5.3 miles west of gage. Altitude of gage is 1,270 ft (from topographic map).

AVERAGE DISCHARGE.--12 years, 14.8 cfs (10,700 acre-ft per year).

EXTREMES.--Current year: Maximum discharge, 4,270 cfs Jan. 18 (gage height, 9.99 ft), from rating curve extended above 720 cfs as explained below; no flow for several months.
Period of record: Maximum discharge, 6,060 cfs Jan. 19, 1969 (gage height, 11.12 ft in gage well, 11.75 ft, from floodmarks), from rating curve extended above 1,300 cfs on basis of slope-area measurement of maximum flow; no flow for several months in each year.

REMARKS.--Records good except those for period of no gage-height record, which are poor. Some regulation and pumping above station. Records of water temperatures and suspended-sediment discharge for the current year are published in Part 2 of this report.

REVISIONS (WATER YEARS).--WRD Calif. 1969: 1967(M).

DISCHARGE, IN CUBIC FEET PER SECOND, WATER YEAR OCTOBER 1972 TO SEPTEMBER 1973

DAY	OCT	NOV	DEC	JAN	FEB	MAR	APR	MAY	JUN	JUL	AUG	SEP
1		0	.75	1.7	25	138	23	3.0	1.3	.20		
2		0	.75	1.7	22	95	25	3.0	1.3	.18		
3		0	.75	1.7	20	78	21	2.9	1.2	.17		
4		0	16	1.5	23	72	13	2.8	1.2	.16		
5		0	4.5	1.4	21	57	11	2.8	1.2	.14		
6		0	11	1.4	156	138	10	2.7	1.1	.13		
7		0	19	1.4	278	88	9.1	2.7	1.1	.12		
8		0	20	4.5	132	112	8.2	2.6	1.0	.09		
9		0	10	178	85	72	7.8	2.6	.95	.08		
10		0	7.2	89	605	58	7.3	2.5	.90	0		
11		0	5.6	34	654	103	6.1	2.3	.84	0		
12		0	4.8	21	336	71	6.0	2.3	.76	0		
13		0	4.2	15	303	54	5.7	2.3	.73	0		
14		59	3.8	12	198	46	5.4	2.3	.70	0		
15		79	3.3	10	115	41	5.2	2.3	.66	0		
16		67	3.1	476	80	37	5.0	2.3	.61	0		
17		32	3.1	125	59	34	4.8	2.2	.56	0		
18		9.7	2.9	1,300	47	31	4.6	2.2	.52	0		
19		5.0	2.7	210	39	88	4.5	2.2	.48	0		
20		3.5	2.5	100	33	303	4.3	2.1	.45	0		
21		2.5	2.5	62	28	209	4.1	2.1	.41	0		
22		1.9	2.5	41	24	140	3.9	2.1	.38	0		
23		1.5	2.7	29	22	91	3.8	2.1	.35	0		
24		1.4	2.3	25	36	69	3.7	2.0	.32	0		
25		1.0	2.1	23	23	57	3.6	2.0	.31	0		
26		.89	2.1	19	53	50	3.5	1.9	.29	0		
27		.89	2.1	16	283	43	3.4	1.8	.28	0		
28		.75	1.9	14	451	38	3.3	1.7	.24	0		
29		.62	1.7	29	------	33	3.2	1.6	.23	0		
30		.75	1.5	48	------	29	3.1	1.5	.22	0		
31		------	1.5	30	------	26	------	1.4	------	0		------
TOTAL	0	267.40	148.85	2,921.3	4,151	2,501	222.6	70.3	20.59	1.27	0	0
MEAN	0	8.91	4.80	94.2	148	80.7	7.42	2.27	.69	.041	0	0
MAX	0	79	20	1,300	654	303	25	3.0	1.3	.20	0	0
MIN	0	0	.75	1.4	20	26	3.1	1.4	.22	0	0	0
AC-FT	0	530	295	5,790	8,230	4,960	442	139	41	2.5	0	0
(a)	2.39	6.38	2.22	10.55	13.03	5.28	0	.10	.03	0	0	0
(b)	2.56	11.15	3.16	14.93	14.81	.07	0	0	0	0	0	0

CAL YR 1972 TOTAL 684.90 MEAN 1.87 MAX 79 MIN 0 AC-FT 1,360
WTR YR 1973 TOTAL 10,304.31 MEAN 28.2 MAX 1,300 MIN 0 AC-FT 20,440

PEAK DISCHARGE (BASE, 600 CFS)

DATE	TIME	G.H.	DISCHARGE	DATE	TIME	G.H.	DISCHARGE
1-18	1030	9.99	4,270	2-28	0130	7.21	1,320
2-11	0415	8.22	2,180	3-20	0045	6.73	998

a Precipitation, in inches.
b Precipitation, in inches, at auxiliary gage.
NOTE.--No gage-height record Apr. 13 to July 10.

11147500 SALINAS RIVER AT PASO ROBLES, CALIF.

LOCATION.--Lat 35°37'43", long 120°41'00", in Paso de Robles Grant, San Luis Obispo County, on left bank at upstream side of 13th Street Bridge in Paso Robles, 3.5 miles upstream from Huerhuero Creek.

DRAINAGE AREA.--390 sq mi.

PERIOD OF RECORD.--October 1939 to September 1965, October 1969 to current year.

GAGE.--Water-stage recorder. Datum of gage is 670.61 ft above mean sea level. Prior to June 14, 1951, nonrecording gage, and June 14, 1951, to Sept. 30, 1965, water-stage recorder at same site and datum.

AVERAGE DISCHARGE.--30 years, 86.5 cfs (62,670 acre-ft per year).

EXTREMES.--Current year: Maximum discharge, 14,600 cfs Jan. 18 (gage height, 14.61 ft), from rating curve extended above 6,200 cfs; no flow for long periods.
Period of record: Maximum discharge, 14,600 cfs Jan. 18, 1973 (gage height, 14.61 ft), from rating curve extended above 6,200 cfs; maximum gage height, 17.24 ft, Apr. 3, 1958; no flow for long periods in each year.
Flood of Jan. 25, 1969, reached a stage of 23.8 ft, from floodmarks (discharge, 28,000 cfs).

REMARKS.--Records fair. Flow regulated by Santa Margarita Lake 32 miles upstream beginning in 1941 (see sta 11144500). Small diversions above station. Records of chemical analyses for the current year are published in Part 2 of this report.

REVISIONS (WATER YEARS).--WSP 981: 1942.

DISCHARGE, IN CUBIC FEET PER SECOND, WATER YEAR OCTOBER 1972 TO SEPTEMBER 1973

DAY	OCT	NOV	DEC	JAN	FEB	MAR	APR	MAY	JUN	JUL	AUG	SEP
1				0	131	2,060	310	34				
2				0	118	1,250	300	32				
3				0	110	901	290	29				
4				0	192	605	270	28				
5				0	167	558	225	26				
6				0	424	516	215	24				
7				0	1,700	705	198	23				
8				0	802	629	185	23				
9				0	482	589	170	23				
10				220	3,610	502	160	17				
11				50	5,210	450	145	11				
12				19	3,780	463	135	9.9				
13				9.9	4,210	376	125	9.2				
14				5.8	2,200	316	118	9.2				
15				3.9	1,500	370	108	9.2				
16				887	1,020	388	100	8.6				
17				551	589	340	93	5.0				
18				5,390	489	334	86	6.3				
19				2,390	443	322	80	6.3				
20				597	358	2,570	74	6.3				
21				322	316	1,830	70	3.6				
22				212	260	1,740	64	.13				
23				147	228	1,250	60	0				
24				128	228	920	56	0				
25				110	228	696	52	0				
26				98	208	637	48	0				
27				82	662	509	45	0				
28				75	3,920	450	42	0				
29				77	------	406	39	0				
30				154	------	358	36	0				
31		------		157	------	328	------	0	------			------
TOTAL	0	0	0	11,685.6	33,585	23,368	3,899	343.73	0	0	0	0
MEAN	0	0	0	377	1,199	754	130	11.1	0	0	0	0
MAX	0	0	0	5,390	5,210	2,570	310	34	0	0	0	0
MIN	0	0	0	0	110	316	36	0	0	0	0	0
AC-FT	0	0	0	23,180	66,620	46,350	7,730	682	0	0	0	0

CAL YR 1972 TOTAL 278.84 MEAN .7 MAX 55 MIN 0 AC-FT 553
WTR YR 1973 TOTAL 72,881.33 MEAN 200 MAX 5,390 MIN 0 AC-FT 144,600

PEAK DISCHARGE (BASE, 1,100 CFS)

DATE	TIME	G.H.	DISCHARGE	DATE	TIME	G.H.	DISCHARGE
1-18	1400	14.61	14,600	2-28	0445	10.63	5,370
2-7	0645	9.23	2,150	3-20	1015	9.62	3,640
2-11	0745	12.60	9,540				

NOTE.--No gage-height record Apr. 5 to May 7.

11148500 ESTRELLA RIVER NEAR ESTRELLA, CALIF.

LOCATION.--Lat 35°43'02", long 120°38'21", in NW¼NW¼ sec.36, T.25 S., R.12 E., San Luis Obispo County, on right bank 0.2 mile downstream from mouth of Ranchito Canyon, and 1.9 miles northwest of Estrella.

DRAINAGE AREA.--922 sq mi, not including Carrizo Plains.

PERIOD OF RECORD.--October 1954 to current year. Prior to October 1960, published as Estrella Creek near Estrella.

GAGE.--Water-stage recorder and concrete control. Datum of gage is 671.59 ft above mean sea level (levels by Corps of Engineers).

AVERAGE DISCHARGE.--19 years, 26.4 cfs (19,130 acre-ft per year).

EXTREMES.--Current year: Maximum discharge, 8,330 cfs Feb. 11 (gage height, 7.01 ft); no flow for several months.

Period of record: Maximum discharge, 32,500 cfs Feb. 24, 1969 (gage height, 10.4 ft, from floodmarks), by slope-area measurement of maximum flow; maximum gage height, 10.9 ft Jan. 25, 1969, from floodmarks; no flow for several months in each year.

REMARKS.--Records poor. No regulation; pumpage from wells along river for irrigation above station.

DISCHARGE, IN CUBIC FEET PER SECOND, WATER YEAR OCTOBER 1972 TO SEPTEMBER 1973

DAY	OCT	NOV	DEC	JAN	FEB	MAR	APR	MAY	JUN	JUL	AUG	SEP
1		0	0	.70	9.3	158	5.4	.89				
2		0	0	.90	8.4	53	5.4	.77				
3		0	0	1.3	8.4	41	6.6	.68				
4		0	0	1.3	14	34	6.6	.57				
5		10	0	.90	13	30	6.0	.49				
6		0	.31	1.3	147	44	7.3	.44				
7		0	.70	1.3	301	65	12	.39				
8		0	.90	2.3	285	65	15	.36				
9		0	.70	9.3	152	53	14	.32				
10		0	.20	16	1,360	61	12	.29				
11		0	.40	4.4	4,040	44	13	.25				
12		0	0	3.3	3,300	46	14	.21				
13		0	.50	2.8	1,530	55	15	.18				
14		500	.10	2.3	360	30	16	.15				
15		70	.20	2.3	168	18	15	.09				
16		300	.90	244	84	12	15	.02				
17		5.8	1.1	152	44	9.7	12	.01				
18		1.6	1.1	1,100	26	8.8	8.1	0				
19		.10	.90	1,550	19	9.7	7.2	0				
20		0	.90	216	21	497	6.2	0				
21		0	.90	59	12	387	5.1	0				
22		0	.90	28	21	256	4.2	0				
23		0	.90	8.4	30	213	3.4	0				
24		0	.90	5.1	37	104	2.9	0				
25		0	.90	7.5	34	68	2.5	0				
26		0	.90	13	34	48	2.1	0				
27		0	1.1	12	78	37	1.8	0				
28		0	1.1	12	328	27	1.5	0				
29		0	.70	10	------	19	1.2	0				
30		0	.70	13	------	15	1.0	0				
31		------	.90	10	------	12	------	0	------			------
TOTAL	0	887.50	18.81	3,490.40	12,464.1	2,520.2	237.5	6.11	0	0	0	0
MEAN	0	29.6	.61	113	445	81.3	7.92	.20	0	0	0	0
MAX	0	500	1.1	1,550	4,040	497	16	.89	0	0	0	0
MIN	0	0	0	.70	8.4	8.8	1.0	0	0	0	0	0
AC-FT	0	1,760	37	6,920	24,720	5,000	471	12	0	0	0	0

CAL YR 1972 TOTAL 1,081.93 MEAN 2.96 MAX 500 MIN 0 AC-FT 2,150
WTR YR 1973 TOTAL 19,624.62 MEAN 53.8 MAX 4,040 MIN 0 AC-FT 38,930

PEAK DISCHARGE (BASE, 200 CFS)

DATE	TIME	G.H.	DISCHARGE	DATE	TIME	G.H.	DISCHARGE
11-14	1200	4.35	1,820	2-7	2300	3.31	549
11-16	0600	--	1,310	2-11	0500	7.01	8,330
1-16	2200	3.50	1,500	2-28	1700	3.45	746
1-18	2245	5.20	4,750	3-20	0830	3.47	778

11148900 NACIMIENTO RIVER BELOW SAPAQUE CREEK, NEAR BRYSON, CALIF.

LOCATION.--Lat 35°47'19", long 121°05'34", in SW¼NE¼ sec.3, T.25 S., R.8 E., San Luis Obispo County, on left bank just downstream from Sapaque Creek, 1.4 miles south of Bryson.

DRAINAGE AREA.--156 sq mi.

PERIOD OF RECORD.--October 1971 to current year.

GAGE.--Water-stage recorder. Altitude of gage is 800 ft (from topographic map).

EXTREMES.--Current year: Maximum discharge, 25,200 cfs Jan. 16 (gage height, 23.00 ft), from rating curve extended as explained below; no flow many days.
Period of record: Maximum discharge, 25,200 cfs Jan. 16, 1973 (gage height, 23.00 ft), from rating curve extended above 2,500 cfs on basis of slope-area measurement at gage height 16.84 ft; no flow for several months in each year.

REMARKS.--Records fair. No storage or diversion above station. Records of water temperatures and suspended-sediment discharge for the current year are published in Part 2 of this report.

DISCHARGE, IN CUBIC FEET PER SECOND, WATER YEAR OCTOBER 1972 TO SEPTEMBER 1973

DAY	OCT	NOV	DEC	JAN	FEB	MAR	APR	MAY	JUN	JUL	AUG	SEP
1	0	1.2	45	29	526	1,840	223	48	15	1.0		
2	0	1.2	42	29	434	1,100	208	46	15	.90		
3	0	1.4	40	29	585	830	193	45	14	.90		
4	0	3.8	50	28	1,290	776	175	44	13	.82		
5	0	14	55	27	760	620	166	42	12	.74		
6	0	12	66	26	3,930	920	155	40	12	.60		
7	0	10	91	25	3,160	788	148	38	10	.55		
8	0	9.3	88	93	1,370	758	135	37	8.4	.50		
9	0	9.3	79	2,490	950	595	127	36	7.0	.44		
10	0	54	72	1,320	5,950	510	127	35	6.3	.44		
11	0	384	66	530	7,350	495	119	33	6.0	.34		
12	0	132	60	348	3,600	436	111	32	6.0	.30		
13	0	333	57	267	3,840	372	109	31	6.0	.26		
14	0	4,450	52	210	1,950	336	111	30	6.3	.19		
15	0	1,980	49	169	1,300	299	107	30	6.3	.16		
16	0	1,670	47	7,690	908	278	105	28	6.3	.11		
17	33	1,370	49	2,400	690	260	99	26	6.0	.09		
18	39	538	52	10,000	555	244	92	23	5.7	.09		
19	29	321	47	2,560	455	388	86	22	5.1	.13		
20	14	215	47	1,060	376	1,820	80	21	4.8	.16		
21	8.8	159	44	675	316	962	75	20	3.9	.19		
22	6.4	132	43	462	268	848	71	20	3.3	.23		
23	5.0	109	44	374	229	630	68	20	2.9	.23		
24	4.0	93	41	321	992	510	65	19	2.6	.19		
25	3.2	80	39	300	620	432	62	19	2.3	.19		
26	2.4	72	37	258	1,300	392	59	18	2.2	.11		
27	2.0	65	36	215	7,660	352	57	18	1.9	.02		
28	1.6	57	35	192	6,240	310	54	16	1.6	0		
29	1.2	52	33	416	------	282	52	15	1.4	0		
30	1.0	48	31	1,710	------	264	50	14	1.2	0		
31	1.2	------	30	775	------	244	------	13	------	0		------
TOTAL	151.8	12,376.2	1,567	35,028	57,604	18,891	3,289	879	194.5	9.88	0	0
MEAN	4.90	413	50.5	1,130	2,057	609	110	28.4	6.48	.32	0	0
MAX	39	4,450	91	10,000	7,660	1,840	223	48	15	1.0	0	0
MIN	0	1.2	30	25	229	244	50	13	1.2	0	0	0
AC-FT	301	24,550	3,110	69,480	114,300	37,470	6,520	1,740	386	20	0	0

CAL YR 1972 TOTAL 20,368.35 MEAN 55.7 MAX 4,450 MIN 0 AC-FT 40,400
WTR YR 1973 TOTAL 129,990.38 MEAN 356 MAX 10,000 MIN 0 AC-FT 257,800

PEAK DISCHARGE (BASE, 4,000 CFS)

DATE	TIME	G.H.	DISCHARGE	DATE	TIME	G.H.	DISCHARGE
11-14	0345	16.59	7,540	2-11	0700	19.58	14,400
1-16	1500	23.00	25,200	2-27	1930	20.59	17,200
2-6	1330	15.80	6,350				

RESERVOIRS IN SALINAS RIVER BASIN, CALIF.

11149300 NACIMIENTO RESERVOIR.--Lat 35°45'29", long 120°53'01", in NW¼ sec.15, T.25 S., R.10 E., San Luis Obispo County, at right end of dam on Nacimiento River, 8.6 miles southwest of Bradley, and 12.3 miles upstream from mouth. Drainage area, 319 sq mi. Period of record, February 1957 to current year. Monthend contents prior to October 1970, published in WRD Calif. 1970. Nonrecording gage read once daily. Datum of gage is at mean sea level (levels by Monterey County Flood Control and Water Conservation District). Extremes for current year: Maximum contents observed, 313,600 acre-ft May 14-22 (elevation, 792.75 ft); minimum observed, 14,180 acre-ft Nov. 1-4 (elevation, 677.20 ft). Extremes for period of record: Maximum contents observed, 374,500 acre-ft Apr. 7, 1958 (elevation, 804.7 ft); minimum observed since appreciable storage was attained, 10,910 acre-ft Oct. 11, 1960 (elevation, 670.8 ft).

Reservoir is formed by earthfill dam completed in 1957. Total capacity, 350,000 acre-ft; usable capacity, 340,000 acre-ft between elevations 670.0 ft (outlet) and 800.0 ft (crest of spillway). Dead storage, 10,000 acre-ft. Figures given herein represent total contents. Reservoir is used for flood control and water released down Nacimiento River for irrigation. Record of contents furnished by Monterey County Flood Control and Water Conservation District.

11150100 SAN ANTONIO RESERVOIR.--Lat 35°47'55", long 120°53'02", in SW¼ sec.34, T.24 S., R.10 E., Monterey County, at dam on San Antonio River, 0.7 mile upstream from Sulphur Canyon, and 6.4 miles southwest of Bradley. Drainage area, 330 sq mi. Period of record, December 1965 to current year. Monthend contents prior to October 1970, published in WRD Calif. 1970. Water-stage recorder. Datum of gage is at mean sea level (levels by Monterey County Flood Control and Water Conservation District). Extremes for current year: Maximum contents, 210,300 acre-ft May 14-22 (elevation, 751.70 ft); minimum, 93,820 acre-ft Nov. 5-13 (elevation, 714.10 ft). Extremes for period of record: Maximum contents, 348,900 acre-ft May 27, 1969 (elevation, 779.8 ft); minimum since appreciable storage was attained, 93,820 acre-ft Nov. 5-13, 1972 (elevation, 714.1 ft).

Reservoir is formed by earthfill dam completed in 1965. Total capacity, 350,000 acre-ft; usable capacity, 330,000 acre-ft between elevations 662.0 ft (minimum pool) and 780.0 ft (crest of spillway). Dead storage, 20,000 acre-ft. Records given herein represent total contents. Reservoir is used for flood control and water released down San Antonio River for irrigation. Record of contents furnished by Monterey County Flood Control and Water Conservation District.

MONTHEND CONTENTS, IN ACRE-FEET, AT 2400, OCTOBER 1972 TO SEPTEMBER 1973

Date	Nacimiento Reservoir	San Antonio Reservoir
Sept. 30, 1972.	24,400	100,100
Oct. 31.....	14,210	94,040
Nov. 30.....	41,410	97,260
Dec. 31.....	45,020	97,500
Jan. 31, 1973..	136,700	119,500
Feb. 28.....	265,500	172,100
Mar. 31.....	304,500	203,500
Apr. 30.....	312,900	209,500
May 31.....	312,900	206,900
June 30.....	294,800	204,700
July 31.....	267,700	203,100
Aug. 31.....	239,800	199,400
Sept. 30.....	218,000	197,800

11149400 NACIMIENTO RIVER BELOW NACIMIENTO DAM, NEAR BRADLEY, CALIF.

LOCATION.--Lat 35°45'41", long 120°51'16", in NE¼NE¼ sec.14, T.25 S., R.10 E., San Luis Obispo County, Camp Roberts Military Reservation, on left bank 2.2 miles downstream from Nacimiento Dam, and 7.6 miles southwest of Bradley.

DRAINAGE AREA.--322 sq mi.

PERIOD OF RECORD.--October 1957 to current year.

GAGE.--Water-stage recorder. Datum of gage is 597 ft above mean sea level (Corps of Engineers bench mark).

AVERAGE DISCHARGE (unadjusted).--16 years, 267 cfs (193,400 acre-ft per year).

EXTREMES.--Current year: Maximum discharge, 4,760 cfs Feb. 28 (gage height, 9.68 ft); minimum daily, 0.16 cfs Nov. 9.
Period of record: Maximum discharge, 7,340 cfs Feb. 25, 1969 (gage height, 10.92 ft); no flow for many days in each year except 1964, 1966-73.

REMARKS.--Records good. Flow regulated by Nacimiento Dam 2.2 miles upstream (see sta 11149300). No diversion above station.

REVISIONS (WATER YEARS).--WRD Calif. 1970: 1969.

DISCHARGE, IN CUBIC FEET PER SECOND, WATER YEAR OCTOBER 1972 TO SEPTEMBER 1973

DAY	OCT	NOV	DEC	JAN	FEB	MAR	APR	MAY	JUN	JUL	AUG	SEP
1	12	13	13	14	16	4,670	34	9.9	253	389	425	405
2	112	9.4	13	14	16	3,800	31	9.9	253	389	421	405
3	208	1.5	13	14	16	2,840	28	11	249	385	421	401
4	208	.92	13	14	17	2,810	28	11	249	385	421	401
5	208	.59	13	14	16	1,320	28	11	249	385	421	405
6	204	.40	14	14	22	40	28	11	249	385	445	405
7	204	.33	14	14	21	37	28	11	249	385	479	389
8	204	.21	13	15	18	37	28	9.4	249	385	479	373
9	204	.16	13	18	17	35	28	9.4	245	385	474	369
10	204	.92	14	16	20	35	28	9.4	245	405	474	369
11	201	13	14	15	21	35	27	9.4	249	429	474	369
12	201	12	14	15	20	34	27	9.4	245	429	474	369
13	201	13	14	15	19	34	27	9.4	249	429	474	369
14	201	15	14	15	518	33	27	9.4	135	429	474	369
15	204	13	14	13	2,460	33	27	9.4	88	429	470	369
16	201	13	14	18	1,800	33	27	9.4	309	429	470	369
17	253	13	14	17	1,320	33	27	9.4	313	429	441	369
18	297	12	14	24	1,310	33	23	9.4	313	429	413	365
19	293	12	14	17	1,310	35	13	9.4	313	429	413	369
20	293	12	14	16	582	35	11	9.4	313	425	409	369
21	333	12	14	16	7.4	34	11	9.4	313	425	409	369
22	365	12	14	16	6.1	33	11	9.4	353	425	409	369
23	365	12	14	16	5.7	33	11	8.9	393	425	409	369
24	361	13	14	16	5.7	33	11	8.4	389	425	409	369
25	361	13	14	16	5.4	33	11	8.4	389	425	409	369
26	357	12	14	16	5.4	33	11	8.4	389	425	409	369
27	385	13	14	16	6.6	33	11	8.4	389	425	409	369
28	421	13	14	16	2,530	33	11	8.4	389	425	405	369
29	304	13	14	16	------	33	11	31	389	425	405	369
30	7.4	13	14	18	------	33	11	11	385	425	405	369
31	11	------	14	16	------	34	------	116	------	425	405	------
TOTAL	7,383.4	281.43	427	490	12,111.3	16,327	635	424.7	8,795	12,839	13,455	11,298
MEAN	238	9.38	13.8	15.8	433	527	21.2	13.7	293	414	434	377
MAX	421	15	14	24	2,530	4,670	34	116	393	429	479	405
MIN	7.4	.16	13	13	5.4	33	11	8.4	88	385	405	365
AC-FT	14,640	558	847	972	24,020	32,380	1,260	842	17,440	25,470	26,690	22,410

CAL YR 1972 TOTAL 40,207.71 MEAN 110 MAX 421 MIN .16 AC-FT 79,750
WTR YR 1973 TOTAL 84,466.83 MEAN 231 MAX 4,670 MIN .16 AC-FT 167,500

11149900 SAN ANTONIO RIVER NEAR LOCKWOOD, CALIF.

LOCATION.--Lat 35°53'48", long 121°05'14", in Los Ojitos Grant, Monterey County, on downstream side of highway bridge, 0.4 mile upstream from Tule Canyon, and 3.3 miles south of Lockwood.

DRAINAGE AREA.--223 sq mi.

PERIOD OF RECORD.--October 1965 to current year.

GAGE.--Water-stage recorder. Datum of gage is 800.00 ft above mean sea level.

AVERAGE DISCHARGE.--8 years, 98.2 cfs (71,150 acre-ft per year).

EXTREMES.--Current year: Maximum discharge, 5,820 cfs Jan. 16 (gage height, 4.43 ft); no flow for several months.
Period of record: Maximum discharge, 14,000 cfs Jan. 26, 1969 (gage height, 8.25 ft); maximum gage height, 9.2 ft, from floodmarks, Dec. 6, 1966; no flow for several months in each year.

REMARKS.--Records fair. No regulation; some pumping above station. Records of water temperatures and total-sediment discharge for the current year are published in Part 2 of this report.

DISCHARGE, IN CUBIC FEET PER SECOND, WATER YEAR OCTOBER 1972 TO SEPTEMBER 1973

DAY	OCT	NOV	DEC	JAN	FEB	MAR	APR	MAY	JUN	JUL	AUG	SEP
1		0	17	18	211	1,100	198	65	19	.10		
2		0	16	19	164	820	202	62	17	0		
3		0	18	19	158	748	194	64	18	0		
4		0	20	18	264	788	184	56	17	0		
5		0	24	17	239	676	168	63	16	0		
6		0	27	15	838	536	156	60	15	0		
7		0	31	15	1,340	529	152	55	13	0		
8		0	32	20	1,000	489	140	55	12	0		
9		0	28	449	756	411	126	53	12	0		
10		0	28	652	1,490	367	133	52	12	0		
11		0	28	270	2,600	373	127	48	11	0		
12		0	25	188	1,560	361	122	49	10	0		
13		0	21	133	1,750	314	112	45	10	0		
14		385	19	108	1,400	308	99	45	9.9	0		
15		411	17	90	1,360	266	90	44	9.5	0		
16		434	15	1,460	1,260	220	88	41	10	0		
17		256	19	1,110	1,100	225	85	38	8.6	0		
18		150	21	1,720	950	207	71	34	7.4	0		
19		101	22	1,100	748	189	76	30	6.8	0		
20		79	22	668	668	498	82	28	6.2	0		
21		66	20	482	592	392	83	27	5.8	0		
22		54	21	356	515	385	80	27	5.1	0		
23		46	21	277	456	308	71	27	4.7	0		
24		37	19	231	660	298	75	25	4.2	0		
25		33	19	198	660	308	77	24	3.6	0		
26		31	18	161	676	303	69	23	3.1	0		
27		27	18	132	1,590	281	71	24	2.6	0		
28		25	19	111	1,910	256	69	22	2.0	0		
29		24	18	123	------	238	64	21	1.4	0		
30		20	18	358	------	220	65	21	.63	0		
31		------	18	291	------	198	------	17	------	0		------
TOTAL	0	2,179	659	10,809	26,915	12,612	3,329	1,245	273.53	.10	0	0
MEAN	0	72.6	21.3	349	961	407	111	40.2	9.12	.003	0	0
MAX	0	434	32	1,720	2,600	1,100	202	65	19	.10	0	0
MIN	0	0	15	15	158	189	64	17	.63	0	0	0
AC-FT	0	4,320	1,310	21,440	53,390	25,020	6,600	2,470	543	.2	0	0

CAL YR 1972 TOTAL 5,460.77 MEAN 14.9 MAX 434 MIN 0 AC-FT 10,830
WTR YR 1973 TOTAL 58,021.63 MEAN 159 MAX 2,600 MIN 0 AC-FT 115,100

PEAK DISCHARGE (BASE, 350 CFS)

DATE	TIME	G.H.	DISCHARGE	DATE	TIME	G.H.	DISCHARGE
11-14	1230	2.17	876	2-6	2115	2.81	1,510
11-16	0515	1.90	660	2-11	0845	4.74	4,550
1-10	0130	2.44	1,140	2-27	2200	3.99	3,200
1-16	1745	4.43	5,820	3-20	0600	2.03	764
1-30	1515	1.61	456				

11150500 SALINAS RIVER NEAR BRADLEY, CALIF.

LOCATION.--Lat 35°55'49", long 120°52'04", in SW¼NW¼ sec.14, T.23 S., R.10 E., Monterey County, on left bank 6 miles northwest of Bradley, and 7 miles downstream from San Antonio River.

DRAINAGE AREA.--2,535 sq mi.

PERIOD OF RECORD.--October 1948 to current year. Monthly discharge only for some periods, published in WSP 1315-B.

GAGE.--Water-stage recorder. Datum of gage is 442.69 ft above mean sea level (levels by Corps of Engineers).

AVERAGE DISCHARGE (unadjusted).--25 years, 436 cfs (315,900 acre-ft per year).

EXTREMES.--Current year: Maximum discharge, 16,000 cfs Feb. 11 (gage height, unknown); minimum daily, 15 cfs May 18.
Period of record: Maximum discharge, 117,000 cfs Feb. 24, 1969 (gage height, 20.34 ft, from floodmarks); no flow at times in 1951, 1954-55, 1957.

REMARKS.--Records poor. Flow partly regulated by Santa Margarita Lake (see sta 11144500) Nacimiento Reservoir beginning in February 1957 (see sta 11149300), and San Antonio Reservoir beginning in December 1965 (see sta 11150100). Several small diversions above station. Records of chemical analyses for the current year are published in Part 2 of this report.

REVISIONS (WATER YEARS).--WSP 1285: 1950.

DISCHARGE, IN CUBIC FEET PER SECOND, WATER YEAR OCTOBER 1972 TO SEPTEMBER 1973

DAY	OCT	NOV	DEC	JAN	FEB	MAR	APR	MAY	JUN	JUL	AUG	SEP
1	344	96	32	38	110	7,500	470	60	270	385	440	402
2	321	81	32	38	100	6,000	430	56	275	385	440	402
3	265	69	31	37	95	5,000	390	53	285	385	440	410
4	366	69	32	34	90	4,000	360	50	300	385	440	410
5	381	60	31	34	200	3,200	330	46	305	385	440	402
6	364	56	32	36	500	2,600	300	43	310	385	450	402
7	387	52	31	34	2,000	2,100	270	40	310	385	460	418
8	420	49	30	37	1,500	1,700	250	37	310	385	460	394
9	427	44	30	48	1,200	1,500	230	34	310	385	460	378
10	443	46	30	66	1,100	1,200	220	31	310	400	460	386
11	429	59	30	55	12,000	1,000	200	27	310	430	460	378
12	414	50	27	46	9,000	900	190	25	310	440	460	378
13	382	44	25	43	5,000	850	180	22	310	440	460	362
14	389	89	25	42	4,000	800	170	20	20	440	460	362
15	434	124	27	42	3,500	720	160	19	260	440	460	362
16	406	127	30	53	4,000	650	150	17	310	440	460	362
17	369	97	31	260	3,500	600	140	16	320	440	460	346
18	300	67	31	3,120	2,700	550	130	15	320	440	420	318
19	437	56	32	4,300	2,300	500	120	16	320	440	420	306
20	344	50	32	2,500	2,000	2,000	115	20	320	440	460	306
21	307	47	34	1,000	1,300	3,000	110	75	340	440	460	312
22	347	45	34	600	800	2,500	100	75	370	440	434	312
23	335	43	36	400	600	1,800	95	75	380	440	418	306
24	315	42	36	300	550	1,400	90	200	385	440	394	306
25	327	38	36	250	500	1,200	85	250	385	440	386	324
26	337	38	37	200	1,000	1,000	80	260	385	440	386	330
27	329	37	37	170	3,000	840	75	260	385	440	378	332
28	387	37	38	150	9,000	700	70	260	385	440	386	354
29	377	36	37	140	------	630	67	240	385	440	386	362
30	247	34	37	130	------	550	63	235	385	440	378	354
31	128	------	37	120	------	520	------	250	------	440	386	------
TOTAL	11,058	1,782	1,000	14,323	71,645	57,510	5,640	2,827	9,570	13,095	13,402	10,776
MEAN	357	59.4	32.3	462	2,559	1,855	188	91.2	319	422	432	359
MAX	443	127	38	4,300	12,000	7,500	470	260	385	440	460	418
MIN	128	34	25	34	90	500	63	15	20	385	378	306
AC-FT	21,930	3,530	1,980	28,410	142,100	114,100	11,190	5,610	18,980	25,970	26,580	21,370

CAL YR 1972 TOTAL 110,128 MEAN 301 MAX 730 MIN 15 AC-FT 218,400
WTR YR 1973 TOTAL 212,628 MEAN 583 MAX 12,000 MIN 15 AC-FT 421,700

NOTE.--No gage-height record Jan. 19 to Aug. 22.

11151300 SAN LORENZO CREEK BELOW BITTERWATER CREEK, NEAR KING CITY, CALIF.

LOCATION.--Lat 36°16'05", long 121°03'55", in NE¼ sec.23, T.19 S., R.8 E., Monterey County, on right bank 1.3 miles downstream from Bitterwater Creek, 5 miles northeast of King City, and 10 miles upstream from mouth.

DRAINAGE AREA.--233 sq mi.

PERIOD OF RECORD.--October 1958 to current year.

GAGE.--Water-stage recorder. Datum of gage is 431.64 ft above mean sea level. Prior to Apr. 24, 1967, at site 500 ft upstream at datum 5.00 ft higher.

AVERAGE DISCHARGE.--15 years, 12.1 cfs (8,770 acre-ft per year).

EXTREMES.--Current year: Maximum discharge, 4,320 cfs Feb. 11 (gage height, 10.82 ft); no flow many days. Period of record: Maximum discharge, 10,800 cfs Jan. 25, 1969 (gage height, 15.33 ft in gage well, 16.2 ft, from floodmarks); no flow many days in 1961 and 1973.

REMARKS.--Records fair. No regulation; small diversions above station.

DISCHARGE, IN CUBIC FEET PER SECOND, WATER YEAR OCTOBER 1972 TO SEPTEMBER 1973

DAY	OCT	NOV	DEC	JAN	FEB	MAR	APR	MAY	JUN	JUL	AUG	SEP
1	.28	.13	1.0	1.5	31	125	26	1.7	.90	.10	.01	0
2	.28	.13	1.0	1.5	20	80	26	.90	.90	.19	0	0
3	.28	.13	1.0	1.7	17	60	19	.90	.90	.19	0	0
4	.28	.28	1.0	1.5	18	73	12	.90	.90	.19	0	0
5	.25	.13	1.0	1.5	34	51	12	.90	.90	.19	0	0
6	.25	.10	1.1	1.5	229	95	8.0	.90	.90	.35	0	0
7	.22	.12	1.1	1.5	320	127	8.0	.90	.90	.35	0	0
8	.22	.10	1.1	3.5	101	127	2.9	.54	.90	.54	0	0
9	.28	.09	1.1	28	74	76	4.9	.35	.90	.54	0	0
10	.32	.25	1.3	80	415	51	4.9	.35	.90	.35	0	0
11	.25	2.8	1.9	18	1,310	73	1.7	.19	.54	.19	0	0
12	.22	8.0	1.7	9.0	235	51	4.9	.10	.90	.35	0	.01
13	.19	3.5	1.8	4.4	515	31	19	.10	.90	.19	0	.06
14	.28	120	1.7	3.1	113	17	8.0	.19	.90	.35	0	.06
15	.41	42	1.8	1.9	77	12	8.0	.19	.54	.35	0	.10
16	.41	95	1.8	89	56	10	4.9	.19	.54	.19	0	.10
17	.32	9.0	2.8	216	35	9.0	4.9	.10	.54	.19	0	.10
18	.25	2.4	2.7	360	19	8.0	4.9	.06	.54	.06	0	.10
19	.22	1.0	2.0	192	4.4	8.6	4.9	.10	.54	.04	0	.10
20	.22	1.0	1.8	80	4.4	348	2.9	.10	.54	.04	0	.19
21	.19	1.0	1.7	70	4.0	133	2.9	.19	.35	.02	0	.19
22	.17	1.0	1.6	57	3.7	107	2.9	.19	.35	.02	0	.19
23	.17	1.0	1.6	48	3.5	60	.90	.35	.10	.02	0	.19
24	.17	1.0	1.5	38	4.8	39	.90	.35	.10	.01	0	.19
25	.15	1.0	1.5	31	4.1	35	.90	.35	.10	.01	0	.19
26	.15	1.0	1.6	29	4.5	35	.90	.19	.06	.04	0	.35
27	.15	1.0	1.7	26	232	35	.90	.35	.06	.35	0	.35
28	.17	1.0	1.6	19	585	31	.90	.35	.04	.35	0	.35
29	.13	1.0	1.5	17	------	26	.90	.54	.04	.01	0	.35
30	.13	1.0	1.5	48	------	26	.90	1.7	.10	.01	0	.54
31	.13	------	1.5	52	------	26	------	.90	------	.01	0	------
TOTAL	7.14	296.16	48.0	1,530.6	4,469.9	1,985.6	200.80	15.12	16.78	5.79	.01	3.71
MEAN	.23	9.87	1.55	49.4	160	64.1	6.69	.49	.56	.19	.0003	.12
MAX	.41	120	2.8	360	1,310	348	26	1.7	.90	.54	.01	.54
MIN	.13	.09	1.0	1.5	3.5	8.0	.90	.06	.04	.01	0	0
AC-FT	14	587	95	3,040	8,870	3,940	398	30	33	11	.02	7.4

CAL YR 1972 TOTAL 646.12 MEAN 1.77 MAX 120 MIN .09 AC-FT 1,280
WTR YR 1973 TOTAL 8,579.61 MEAN 23.5 MAX 1,310 MIN 0 AC-FT 17,020

PEAK DISCHARGE (BASE, 250 CFS)

DATE	TIME	G.H.	DISCHARGE	DATE	TIME	G.H.	DISCHARGE
11-14	1145	5.71	295	2-11	1045	10.82	4,320
11-16	0715	5.67	275	2-28	0515	8.43	1,600
1-16	2100	7.79	1,600	3-6	2400	6.39	291
2-6	2130	7.72	1,550	3-20	0700	8.06	1,290
2-11	1045	10.82	4,320				

11151700 SALINAS RIVER AT SOLEDAD, CALIF.

LOCATION.--Lat 36°24'40", long 121°19'06", on boundary between San Vicente and Los Coches Grants, Monterey County, near right bank on upstream end of pier on U.S. Highway 101, 0.9 mile south of Soledad, and 1 mile upstream from Arroyo Seco.

DRAINAGE AREA.--3,563 sq mi.

PERIOD OF RECORD.--October 1968 to current year.

GAGE.--Water-stage recorder. Altitude of gage is 170 ft (from topographic map).

AVERAGE DISCHARGE (unadjusted).--5 years, 600 cfs (434,700 acre-ft per year).

EXTREMES.--Current year: Maximum discharge, 12,800 cfs Feb. 12 (gage height, 16.40 ft); minimum daily, 38 cfs Dec. 3.
Period of record: Maximum discharge, 106,000 cfs Feb. 25, 1969 (gage height, 23.31 ft); maximum gage height, 23.39 ft Jan. 26, 1969; minimum daily discharge, 6.0 cfs Mar. 14, 15, 1972.

REMARKS.--Records fair. Flow partly regulated by Santa Margarita Lake (see sta 11144500), Nacimiento Reservoir (see sta 11149300), and San Antonio Reservoir (see sta 11150100). Several small diversions above station. Records of chemical analyses for the current year are published in Part 2 of this report.

DISCHARGE, IN CUBIC FEET PER SECOND, WATER YEAR OCTOBER 1972 TO SEPTEMBER 1973

DAY	OCT	NOV	DEC	JAN	FEB	MAR	APR	MAY	JUN	JUL	AUG	SEP
1	152	186	39	49	269	8,000	689	140	57	102	113	136
2	160	132	39	54	272	7,250	654	133	65	110	111	144
3	161	102	38	58	266	5,950	626	129	62	111	115	151
4	135	97	41	56	264	4,690	590	124	70	107	110	157
5	116	79	40	53	266	4,200	556	120	77	110	113	161
6	134	65	41	54	332	3,250	515	115	81	110	126	157
7	147	55	43	56	1,020	1,980	492	107	84	108	124	157
8	150	51	47	65	1,730	1,740	462	102	86	107	126	159
9	183	45	51	73	1,590	1,600	446	95	80	108	142	159
10	194	49	53	83	1,290	1,410	420	89	80	110	149	157
11	185	60	48	109	7,210	1,260	395	81	81	107	153	159
12	189	48	51	79	10,300	1,160	378	74	89	111	157	153
13	188	41	54	67	7,650	1,170	359	61	87	120	165	149
14	196	86	54	79	6,320	1,110	346	67	80	122	169	149
15	210	116	53	67	5,050	924	326	66	81	126	171	149
16	223	148	56	199	5,930	845	314	60	81	135	165	155
17	240	178	67	265	4,240	791	292	59	65	135	163	167
18	227	131	63	369	3,100	719	284	55	59	136	163	174
19	214	103	58	4,450	2,630	665	272	55	70	135	157	176
20	204	79	48	3,100	2,430	904	256	51	73	135	151	178
21	263	64	48	1,900	1,970	2,460	240	54	75	133	147	178
22	223	57	51	1,100	1,180	2,660	230	54	78	138	140	178
23	209	54	54	787	858	2,460	222	53	80	142	147	180
24	226	51	53	671	755	1,960	207	49	77	140	151	190
25	233	47	54	551	719	1,640	194	47	92	136	145	192
26	234	46	56	466	959	1,380	180	45	100	129	147	192
27	234	44	58	395	3,360	1,190	174	43	102	120	153	192
28	232	42	56	349	7,380	1,060	163	43	100	117	145	187
29	233	41	53	310	------	924	153	43	102	117	140	183
30	261	39	51	284	------	833	145	43	100	124	131	185
31	263	------	49	278	------	749	------	47	------	122	131	------
TOTAL	6,219	2,336	1,567	16,476	79,340	66,934	10,580	2,304	2,414	3,763	4,420	5,004
MEAN	201	77.9	50.5	531	2,834	2,159	353	74.3	80.5	121	143	167
MAX	263	186	67	4,450	10,300	8,000	689	140	102	142	171	192
MIN	116	39	38	49	264	665	145	43	57	102	110	136
AC-FT	12,340	4,630	3,110	32,680	157,400	132,800	20,990	4,570	4,790	7,460	8,770	9,930

CAL YR 1972 TOTAL 44,146.6 MEAN 121 MAX 286 MIN 6.0 AC-FT 87,560
WTR YR 1973 TOTAL 201,357.0 MEAN 552 MAX 10,300 MIN 38 AC-FT 399,400

11151870 ARROYO SECO NEAR GREENFIELD, CALIF.

LOCATION.--Lat 36°14'15", long 121°28'50", in NE¼SE¼ sec.36, T.19 S., R.4 E., Monterey County, on right bank 0.6 mile downstream from Rocky Creek, and 14.5 miles southwest of Greenfield.

DRAINAGE AREA.--113 sq mi.

PERIOD OF RECORD.--October 1961 to current year.

GAGE.--Water-stage recorder. Altitude of gage is 780 ft (from topographic map). Prior to Aug. 27, 1970, at datum 2.00 ft higher.

AVERAGE DISCHARGE.--12 years, 140 cfs (101,400 acre-ft per year).

EXTREMES.--Current year: Maximum discharge, 8,110 cfs Jan. 16 (gage height, 11.17 ft); minimum daily, 1.5 cfs Oct. 3-5.
Period of record: Maximum discharge, 21,800 cfs Dec. 6, 1966 (gage height, 14.50 ft, present datum), from rating curve extended above 5,000 cfs on basis of slope-area measurement at gage-height 12.65 ft, present datum; no flow at times.

REMARKS.--Records good. No regulation; small diversion for fishponds above station by pumping. Records of water temperatures and suspended-sediment discharge for the current year are published in Part 2 of this report.

REVISIONS (WATER YEARS).--WRD Calif. 1967: 1966. WRD Calif. 1969: 1967(P).

DISCHARGE, IN CUBIC FEET PER SECOND, WATER YEAR OCTOBER 1972 TO SEPTEMBER 1973

DAY	OCT	NOV	DEC	JAN	FEB	MAR	APR	MAY	JUN	JUL	AUG	SEP
1	1.6	9.4	59	42	366	1,380	288	119	55	19	11	7.2
2	1.6	9.4	54	42	325	1,050	272	115	55	19	10	7.3
3	1.5	9.4	52	41	357	906	264	113	52	18	10	7.4
4	1.5	38	66	40	526	825	254	111	50	17	9.3	7.1
5	1.5	33	65	40	486	720	244	110	48	16	8.9	7.1
6	1.6	21	96	39	1,650	735	234	108	46	14	10	7.2
7	1.7	18	120	39	1,740	662	224	105	44	14	11	7.2
8	1.7	20	105	65	1,100	642	217	103	41	14	9.6	6.9
9	2.2	17	90	1,020	936	578	211	99	41	14	9.6	5.4
10	5.6	31	83	695	2,500	518	206	97	39	14	9.4	4.0
11	5.6	222	75	378	4,220	518	197	95	39	13	9.1	4.2
12	6.6	99	70	286	2,780	478	191	91	40	13	9.9	4.5
13	11	468	67	232	2,580	444	188	86	39	12	10	4.4
14	11	2,030	64	198	1,940	408	186	84	41	12	10	4.6
15	134	1,880	61	172	1,470	387	179	82	41	12	9.1	4.5
16	99	1,230	60	2,190	1,150	363	172	80	40	12	7.9	4.7
17	170	582	67	1,340	972	342	168	77	39	12	7.2	4.8
18	46	351	81	2,390	820	328	164	74	37	12	7.0	4.9
19	28	250	73	1,380	715	405	160	71	35	12	7.0	5.0
20	20	184	72	855	618	695	156	69	33	12	6.8	5.0
21	16	151	65	646	562	574	151	68	30	12	6.2	5.2
22	14	131	58	510	510	550	148	68	29	14	6.4	5.4
23	13	115	55	422	458	492	142	66	30	17	6.9	5.5
24	12	102	54	360	996	450	140	65	28	15	7.1	5.9
25	11	93	51	328	695	419	136	65	27	15	7.6	6.3
26	10	85	51	288	912	393	133	63	25	14	8.4	6.4
27	9.9	77	49	258	2,370	372	129	62	24	13	8.9	5.9
28	9.6	71	48	234	2,400	348	126	60	22	11	9.4	5.3
29	9.4	66	46	375	------	332	126	57	21	12	8.9	4.9
30	9.1	62	44	570	------	318	125	54	19	14	8.3	4.5
31	9.4	------	43	433	------	305	------	53	------	13	7.6	------
TOTAL	675.1	8,455.2	2,044	15,908	36,154	16,937	5,531	2,570	1,110	431	268.5	168.7
MEAN	21.8	282	65.9	513	1,291	546	184	82.9	37.0	13.9	8.66	5.62
MAX	170	2,030	120	2,390	4,220	1,380	288	119	55	19	11	7.4
MIN	1.5	9.4	43	39	325	305	125	53	19	11	6.2	4.0
AC-FT	1,340	16,770	4,050	31,550	71,710	33,590	10,970	5,100	2,200	855	533	335

CAL YR 1972 TOTAL 17,920.17 MEAN 49.0 MAX 2,030 MIN 0 AC-FT 35,540
WTR YR 1973 TOTAL 90,252.50 MEAN 247 MAX 4,220 MIN 1.5 AC-FT 179,000

PEAK DISCHARGE (BASE, 1,500 CFS)

DATE	TIME	G.H.	DISCHARGE	DATE	TIME	G.H.	DISCHARGE
11-14	0530	8.97	3,760	2-11	0300	10.58	6,450
1-9	1900	8.19	2,280	2-24	1030	7.32	1,640
1-16	1345	11.17	8,110	2-27	2345	9.98	5,360
2-6	2330	8.30	2,410				

11152000 ARROYO SECO NEAR SOLEDAD, CALIF.

LOCATION.--Lat 36°16'50", long 121°19'20", in SW¼NE¼ sec.16, T.19 S., R.6 E., Monterey County, on right bank just downstream from bridge, 1.5 miles downstream from Vaquero Creek, and 10 miles south of Soledad.

DRAINAGE AREA.--244 sq mi.

PERIOD OF RECORD.--November 1901 to current year. Records for water year 1902 incomplete, yearly estimate published in WSP 1315-B.

GAGE.--Water-stage recorder. Datum of gage is 342.20 ft above mean sea level (Corps of Engineers bench mark). Prior to June 16, 1929, nonrecording gage, and June 16, 1929, to Dec. 2, 1941, water-stage recorder at site 1 mile upstream at different datum. Dec. 3, 1941, to Sept. 30, 1959, water-stage recorder at datum 2.00 ft higher. Jan. 30 to Mar. 26, 1969, nonrecording gage at bridge at same datum.

AVERAGE DISCHARGE.--72 years, 162 cfs (117,400 acre-ft per year).

EXTREMES.--Current year: Maximum discharge, 9,880 cfs Feb. 11 (gage height, 11.15 ft); no flow for several days. Period of record: Maximum discharge, 28,300 cfs Apr. 3, 1958 (gage height, 16.40 ft, present datum), from rating curve extended above 12,000 cfs on basis of slope-area measurement at gage height 16.30 ft; no flow at times during several years.

REMARKS.--Records good except those for period of no gage-height record, which are fair. No regulation or large diversion above station.

REVISIONS (WATER YEARS).--WSP 881: 1902-9 (yearly summary only). WSP 1565: 1916-19, 1920-21(M), 1922, 1926-27, 1928-30(M), 1932, 1934, 1936(M). WSP 1715: Drainage area.

DISCHARGE, IN CUBIC FEET PER SECOND, WATER YEAR OCTOBER 1972 TO SEPTEMBER 1973

DAY	OCT	NOV	DEC	JAN	FEB	MAR	APR	MAY	JUN	JUL	AUG	SEP
1	0	10	63	48	390	1,900	366	142	56	20	5.0	2.9
2	0	10	60	48	326	1,490	347	138	55	20	3.4	2.9
3	0	10	60	46	354	1,230	330	132	54	20	2.2	2.9
4	0	14	69	46	578	1,130	316	132	52	19	2.2	2.6
5	0	51	72	45	554	974	303	128	51	18	2.0	2.6
6	0	33	72	43	2,250	981	290	128	48	17	1.3	2.4
7	0	26	130	43	2,660	897	278	124	46	16	2.0	2.4
8	0	25	110	45	1,690	855	266	120	44	16	2.1	2.4
9	0	24	94	1,100	1,260	755	257	116	42	16	4.0	1.8
10	0	27	86	1,260	3,470	695	248	112	41	15	4.0	1.8
11	0	187	79	522	5,500	685	240	110	41	15	4.0	1.8
12	0	125	74	353	3,460	625	232	106	42	14	4.0	1.8
13	0	92	70	263	3,380	575	226	98	43	14	3.7	1.6
14	0	2,700	67	218	2,600	530	223	96	45	13	3.1	1.8
15	5.2	2,220	64	187	2,130	494	216	94	45	13	3.1	2.2
16	72	2,010	63	2,450	1,720	462	210	90	42	13	2.7	2.4
17	184	685	64	2,030	1,380	438	203	87	40	13	2.4	2.4
18	61	361	79	3,230	1,190	418	198	83	38	12	2.0	2.2
19	36	235	74	2,160	1,040	442	193	80	37	11	1.6	2.4
20	27	181	73	1,280	918	1,030	188	76	35	11	1.4	2.6
21	20	150	70	839	814	730	181	76	33	10	1.4	2.4
22	16	128	67	596	735	745	176	76	31	10	1.4	2.4
23	15	110	67	480	680	650	172	74	32	11	1.2	2.4
24	13	99	63	390	1,360	590	167	70	31	11	1.2	2.2
25	11	92	61	334	1,050	545	163	68	29	9.6	1.2	2.2
26	11	84	58	282	1,180	510	158	68	28	8.2	1.2	2.4
27	10	78	56	235	3,020	482	154	66	26	7.3	1.4	2.2
28	11	74	55	204	3,550	454	150	65	24	6.7	2.2	2.2
29	10	70	52	343	------	430	148	60	23	6.1	2.6	2.2
30	9.7	67	51	657	------	410	148	57	21	5.7	2.6	2.0
31	10	------	50	486	------	390	------	56	------	5.3	2.9	------
TOTAL	521.9	9,978	2,173	20,263	49,219	22,542	6,747	2,928	1,175	396.9	75.5	68.3
MEAN	16.8	333	70.1	654	1,758	727	225	94.5	39.2	12.8	2.44	2.28
MAX	184	2,700	130	3,230	5,500	1,900	366	142	56	20	5.0	2.9
MIN	0	10	50	43	326	390	148	56	21	5.3	1.2	1.6
AC-FT	1,040	19,790	4,310	40,190	97,630	44,710	13,380	5,810	2,330	787	150	135

CAL YR 1972 TOTAL 19,803.03 MEAN 54.1 MAX 2,700 MIN 0 AC-FT 39,280
WTR YR 1973 TOTAL 116,087.60 MEAN 318 MAX 5,500 MIN 0 AC-FT 230,300

PEAK DISCHARGE (BASE, 2,500 CFS)

DATE	TIME	G.H.	DISCHARGE	DATE	TIME	G.H.	DISCHARGE
11-14	0830	8.80	4,920	2-7	0245	7.81	3,320
1-9	2200	7.75	3,240	2-11	0600	11.15	9,880
1-16	1615	11.03	9,580	2-28	0245	9.31	5,840
1-18	1445	8.71	4,760				

NOTE.--No gage-height record May 31 to Aug. 1.

11152500 SALINAS RIVER NEAR SPRECKELS, CALIF.

LOCATION.--Lat 36°37'52", long 121°40'17", in Nacional Grant, Monterey County, on right bank on downstream side of bridge on Salinas-Monterey highway, 0.8 mile upstream from El Toro Creek, 1.6 miles northwest of Spreckels, and 2 miles south of Salinas.

DRAINAGE AREA.--4,156 sq mi.

PERIOD OF RECORD.--January 1900 to August 1901, October 1929 to current year. Records for water year 1930 incomplete, yearly estimate published in WSP 1315-B. Published as "near Salinas" 1900-1901.

GAGE.--Water-stage recorder. Datum of gage is 20.56 ft above mean sea level. 1900-1901, May 10 to July 29, 1940, nonrecording gages at site 0.3 mile downstream at different datum. July 29, 1940, to May 22, 1969, water-stage recorder at site 0.3 mile downstream at datum 0.69 ft lower. May 23, 1969, to Jan. 13, 1970, nonrecording gage at same site and datum. Mar. 17, 1941, to June 30, 1961, supplementary nonrecording gages, July 1, 1961, to May 22, 1969, auxiliary water-stage recorder at site 0.3 mile downstream at datum 0.69 ft lower.

AVERAGE DISCHARGE.--44 years (1929-73), 408 cfs (295,600 acre-ft per year).

EXTREMES.--Current year: Maximum discharge, 16,100 cfs Feb. 12 (gage height, 16.04 ft); minimum daily, 0.61 cfs Aug. 18.

Period of record: Maximum discharge, 83,100 cfs Feb. 26, 1969 (gage height, 26.51 ft, site and datum then in use); maximum gage height, 26.85 ft Jan. 16, 1952, site and datum then in use from floodmarks; no flow at times in 1929-40.

REMARKS.--Records fair. Large withdrawals from ground water and small surface-water diversions for municipal use and irrigation of about 95,000 acres above station. Low flow represents waste water from Spreckels sugar refinery and Alisal sewage disposal plant. Flow partly regulated by Nacimiento Reservoir beginning in February 1957 (see sta 11149300) and San Antonio Reservoir beginning in December 1965 (see sta 11150100). Records of chemical analyses, water temperatures, and suspended-sediment discharge for the current year are published in Part 2 of this report.

REVISIONS (WATER YEARS).--WSP 1565: 1930, 1935, 1945. WSP 1715: 1959.

DISCHARGE, IN CUBIC FEET PER SECOND, WATER YEAR OCTOBER 1972 TO SEPTEMBER 1973

DAY	OCT	NOV	DEC	JAN	FEB	MAR	APR	MAY	JUN	JUL	AUG	SEP
1	3.1	66	3.6	2.6	547	5,870	954	121	2.8	2.0	1.4	1.8
2	3.0	71	2.9	2.8	461	7,500	876	113	2.8	2.0	1.4	1.6
3	3.1	60	2.9	2.8	416	6,460	805	110	3.0	1.9	1.3	1.6
4	3.1	47	3.8	2.6	390	4,870	747	103	3.3	1.9	1.3	1.5
5	3.1	25	3.1	2.5	483	4,380	681	95	3.3	1.8	1.4	1.5
6	3.3	13	2.5	2.6	603	4,040	633	90	3.5	1.8	1.3	1.4
7	3.4	7.5	4.6	3.6	1,660	2,960	591	86	3.5	1.6	1.2	1.4
8	3.3	4.7	5.1	6.6	2,300	2,500	549	81	3.5	1.6	1.2	1.4
9	3.4	3.2	3.5	14	2,330	2,310	521	77	3.3	1.8	1.0	1.3
10	3.3	3.5	3.2	15	2,120	2,100	499	73	3.3	1.8	.80	1.3
11	3.3	5.0	3.1	14	5,350	1,910	462	66	3.3	1.6	.80	1.3
12	3.6	3.1	3.0	17	14,400	1,740	426	56	3.3	1.6	.70	2.8
13	3.4	2.7	3.0	21	10,800	1,600	403	52	2.8	1.6	.70	3.0
14	3.5	5.9	2.9	24	8,990	1,560	387	48	2.8	1.8	.80	3.5
15	3.6	7.4	3.0	26	6,250	1,400	367	45	2.8	1.8	.70	3.9
16	4.2	335	3.0	18	6,670	1,200	349	44	2.8	1.8	.70	3.5
17	3.8	711	3.4	223	5,950	1,080	328	35	2.8	1.8	.70	4.8
18	3.7	415	3.5	1,530	4,290	972	305	30	2.8	1.8	.61	6.1
19	3.4	284	3.5	2,090	3,580	896	286	24	2.6	1.6	3.7	8.5
20	3.6	154	3.3	5,440	3,210	1,270	264	19	2.6	1.6	10	12
21	3.4	88	3.0	2,760	2,950	2,080	245	15	2.6	1.6	12	25
22	3.4	61	3.0	1,680	2,380	3,120	223	13	2.6	1.5	6.1	28
23	3.4	46	3.0	1,210	1,880	2,780	211	11	2.4	1.5	2.8	31
24	3.4	35	3.0	969	1,670	2,430	201	8.5	2.4	1.5	2.4	27
25	13	26	2.5	806	2,040	2,100	183	7.2	2.4	1.5	2.0	27
26	34	20	2.6	663	1,740	1,820	173	4.4	2.2	1.6	2.0	24
27	44	16	2.8	559	2,000	1,610	164	3.3	2.2	1.6	2.0	22
28	48	13	2.8	475	4,530	1,450	158	3.3	2.2	1.5	1.9	22
29	52	7.6	2.6	413	------	1,280	148	3.0	1.9	1.4	1.9	21
30	59	4.1	2.6	403	------	1,150	135	3.0	1.9	1.4	1.8	19
31	63	------	2.6	591	------	1,060	------	2.8	------	1.5	1.8	------
TOTAL	394.8	2,540.7	97.4	19,987.1	99,990	77,498	12,274	1,442.5	83.7	51.8	68.41	310.2
MEAN	12.7	84.7	3.14	645	3,571	2,500	409	46.5	2.79	1.67	2.21	10.3
MAX	63	711	5.1	5,440	14,400	7,500	954	121	3.5	2.0	12	31
MIN	3.0	2.7	2.5	2.5	390	896	135	2.8	1.9	1.4	.61	1.3
AC-FT	783	5,040	193	39,640	198,300	153,700	24,350	2,860	166	103	136	615

CAL YR 1972 TOTAL 4,592.43 MEAN 12.5 MAX 711 MIN .45 AC-FT 9,110
WTR YR 1973 TOTAL 214,738.61 MEAN 588 MAX 14,400 MIN .61 AC-FT 425,900

11152540 EL TORO CREEK NEAR SPRECKELS, CALIF.

LOCATION.--Lat 36°35'00", long 121°42'50", in El Toro Grant, Monterey County, on right bank 0.3 mile downstream from San Benancio Gulch, and 4.7 miles southwest of Spreckels.

DRAINAGE AREA.--31.9 sq mi.

PERIOD OF RECORD.--October 1961 to current year.

GAGE.--Water-stage recorder and concrete control. Altitude of gage is 210 ft (from topographic map).

AVERAGE DISCHARGE.--12 years, 1.62 cfs (1,170 acre-ft per year).

EXTREMES.--Current year: Maximum discharge, 514 cfs Feb. 11 (gage height, 5.71 ft), from rating curve extended as explained below; minimum daily, 0.02 cfs Oct. 1-10.
Period of record: Maximum discharge, 626 cfs Jan. 26, 1969 (gage height, 5.99 ft), from rating curve extended above 93 cfs on basis of slope-area measurement of maximum flow; no flow many days in most years.

REMARKS.--Records fair. No regulation or diversion above station except for minor stock ponds.

DISCHARGE, IN CUBIC FEET PER SECOND, WATER YEAR OCTOBER 1972 TO SEPTEMBER 1973

DAY	OCT	NOV	DEC	JAN	FEB	MAR	APR	MAY	JUN	JUL	AUG	SEP
1	.02	.07	.09	.21	3.9	19	6.8	.34	.24	.21	.20	.17
2	.02	.04	.09	.21	2.4	14	5.9	.24	.24	.21	.20	.17
3	.02	.05	.09	.21	1.8	16	5.0	.24	.22	.21	.20	.17
4	.02	.49	.42	.19	2.6	31	4.3	.34	.18	.21	.20	.17
5	.02	.07	.14	.17	1.6	28	3.6	.34	.18	.21	.20	.17
6	.02	.07	.36	.17	63	40	3.2	.24	.20	.22	.20	.17
7	.02	.09	.71	.17	30	34	2.7	.24	.16	.22	.20	.17
8	.02	.07	.75	.49	19	30	2.4	.24	.16	.22	.20	.17
9	.02	.07	.17	5.1	9.1	28	2.1	.24	.16	.22	.20	.17
10	.02	1.8	.14	1.4	41	27	1.9	.24	.16	.22	.20	.17
11	.03	8.4	.14	.66	241	29	1.9	.24	.17	.22	.19	.16
12	.07	.36	.14	.49	77	26	1.7	.24	.17	.22	.19	.16
13	.04	2.4	.14	.36	91	20	1.4	.24	.17	.22	.19	.16
14	.05	9.1	.14	.30	56	18	1.2	.24	.17	.22	.19	.16
15	.05	7.3	.14	.25	38	15	1.2	.24	.17	.22	.19	.16
16	.57	.49	.14	16	26	14	1.2	.20	.18	.22	.19	.16
17	.07	.14	.17	22	22	14	1.0	.24	.18	.22	.19	.16
18	.05	.09	.14	60	15	14	.84	.28	.18	.22	.19	.16
19	.05	.09	.21	33	13	16	.70	.28	.18	.22	.19	.16
20	.05	.07	.17	13	8.0	67	.70	.24	.18	.22	.19	.16
21	.04	.07	.17	7.0	5.1	54	.58	.24	.19	.21	.18	.16
22	.05	.07	.21	3.4	2.2	44	.58	.24	.19	.21	.18	.15
23	.05	.07	.21	1.8	1.8	36	.58	.24	.19	.21	.18	.15
24	.04	.07	.21	1.1	1.8	29	.58	.24	.19	.21	.18	.14
25	.07	.07	.21	5.4	1.4	24	.58	.20	.19	.21	.18	.13
26	.11	.07	.21	3.4	6.7	20	.60	.20	.20	.21	.18	.13
27	.17	.07	.30	1.2	22	17	.54	.20	.20	.21	.18	.12
28	.21	.07	.30	.75	39	14	.44	.20	.20	.21	.18	.11
29	.21	.07	.21	1.4	------	12	.44	.20	.20	.21	.18	.11
30	.25	.09	.21	22	------	9.6	.34	.22	.20	.21	.18	.10
31	.21	------	.21	7.0	------	8.2	------	.24	------	.21	.18	------
TOTAL	2.64	31.98	6.94	208.83	841.4	767.8	55.00	7.56	5.60	6.66	5.88	4.60
MEAN	.085	1.07	.22	6.74	30.1	24.8	1.83	.24	.19	.21	.19	.15
MAX	.57	9.1	.75	60	241	67	6.8	.34	.24	.22	.20	.17
MIN	.02	.04	.09	.17	1.4	8.2	.34	.20	.16	.21	.18	.10
AC-FT	5.2	63	14	414	1,670	1,520	109	15	11	13	12	9.1

CAL YR 1972 TOTAL 60.86 MEAN .17 MAX 9.1 MIN 0 AC-FT 121
WTR YR 1973 TOTAL 1,944.89 MEAN 5.33 MAX 241 MIN .02 AC-FT 3,860

PEAK DISCHARGE (BASE, 10 CFS)

DATE	TIME	G.H.	DISCHARGE	DATE	TIME	G.H.	DISCHARGE
11-11	0045	4.10	64	2-6	1245	4.28	94
11-14	0315	3.90	38	2-11	0400	5.71	514
1-9	1930	3.64	16	2-14	1245	4.20	80
1-18	1545	4.67	180	2-28	0130	4.25	89
1-25	1915	3.68	19	3-6	unknown	--	unknown
1-30	0845	4.04	56	3-20	do	--	do

NOTE.--No gage-height record June 16 to Sept. 30.

11152570 ALISAL CREEK NEAR SALINAS, CALIF.

LOCATION.--Lat 36°41'33", long 121°34'04", in El Alisal (Bernal) Grant, Monterey County, on left bank at upstream side of Old Stage Road bridge, 5.1 miles northeast of Salinas.

DRAINAGE AREA.--14.2 sq mi.

PERIOD OF RECORD.--October 1970 to current year.

GAGE.--Water-stage recorder. Altitude of gage is 200 ft (from topographic map).

EXTREMES.--Current year: Maximum discharge, 117 cfs Feb. 13 (gage height, 3.21 ft); no flow for several months. Period of record: Maximum discharge, 117 cfs Feb. 13, 1973 (gage height, 3.21 ft); maximum gage height, 4.32 ft Dec. 21, 1970; no flow for most of each year.

REMARKS.--Records poor. Small reservoir 200 ft upstream diverts water for irrigation during most flow periods. Reservoir controls all but high flows.

DISCHARGE, IN CUBIC FEET PER SECOND, WATER YEAR OCTOBER 1972 TO SEPTEMBER 1973

DAY	OCT	NOV	DEC	JAN	FEB	MAR	APR	MAY	JUN	JUL	AUG	SEP
1			0	19	1.5	25	12	0				
2			0	19	1.3	23	11	0				
3			0	6.9	1.1	21	11	0				
4			0	0	.93	26	9.6	0				
5			0	0	.86	24	6.9	0				
6			0	0	2.2	23	10	0				
7			0	0	1.2	22	6.3	0				
8			0	0	1.3	21	0	0				
9			0	.29	1.5	20	0	0				
10			0	1.9	6.4	19	0	.32				
11			0	3.3	81	25	0	.16				
12			6.0	2.6	64	22	0	.18				
13			6.6	2.4	84	21	0	.20				
14			11	2.2	61	20	0	.22				
15			12	1.8	43	18	0	.09				
16			12	3.6	33	18	0	0				
17			13	4.2	25	18	0	0				
18			13	19	20	20	0	0				
19			13	11	15	24	0	0				
20			13	6.4	16	31	0	0				
21			12	3.3	18	28	0	0				
22			12	1.8	15	25	0	0				
23			12	1.4	11	22	0	0				
24			12	1.3	8.6	20	0	0				
25			12	2.1	5.5	21	0	0				
26			18	1.5	4.2	18	0	0				
27			18	1.4	3.5	14	0	0				
28			20	1.3	3.1	14	0	0				
29			18	1.6	------	11	0	0				
30			19	3.8	------	8.8	0	0				
31		------	20	2.2	------	12	------	0	------			------
TOTAL	0	0	272.6	125.29	529.19	634.8	66.8	1.17	0	0	0	0
MEAN	0	0	8.79	4.04	18.9	20.5	2.23	.038	0	0	0	0
MAX	0	0	20	19	84	31	12	.32	0	0	0	0
MIN	0	0	0	0	.86	8.8	0	0	0	0	0	0
AC-FT	0	0	541	249	1,050	1,260	132	2.3	0	0	0	0

CAL YR 1972 TOTAL 272.60 MEAN .74 MAX 20 MIN 0 AC-FT 541
WTR YR 1973 TOTAL 1,629.85 MEAN 4.47 MAX 84 MIN 0 AC-FT 3,230

11152600 GABILAN CREEK NEAR SALINAS, CALIF.

LOCATION.--Lat 36°45'21", long 121°36'34", in La Natividad Grant, Monterey County, on right bank at downstream side of county road bridge, 0.3 mile downstream from small left-bank tributary, and 6.2 miles northeast of Salinas.

DRAINAGE AREA.--36.7 sq mi.

PERIOD OF RECORD.--October 1970 to current year.

GAGE.--Water-stage recorder. Altitude of gage is 200 ft (from topographic map).

EXTREMES.--Current year: Maximum discharge, 385 cfs Feb. 13 (gage height, 4.02 ft), from rating curve extended as explained below; no flow for several months.
Period of record: Maximum discharge, 385 cfs Feb. 13, 1973 (gage height, 4.02 ft), from rating curve extended above 110 cfs on basis of slope-area measurement at gage height 6.1 ft; no flow for most of each year.

REMARKS.--Records poor. No regulation or diversion above station.

DISCHARGE, IN CUBIC FEET PER SECOND, WATER YEAR OCTOBER 1972 TO SEPTEMBER 1973

DAY	OCT	NOV	DEC	JAN	FEB	MAR	APR	MAY	JUN	JUL	AUG	SEP
1				0	.92	50	24	5.8	2.0	.52	.10	
2				0	.55	47	21	5.6	2.0	.49	.05	
3				0	.36	46	19	5.4	1.9	.45	.03	
4				0	.16	56	18	5.2	1.8	.42	0	
5				0	.11	47	17	5.0	1.7	.39	0	
6				0	17	50	15	4.8	1.7	.36	0	
7				0	12	49	14	4.6	1.6	.33	0	
8				0	3.4	44	13	4.4	1.5	.30	0	
9				0	1.0	42	12	4.3	1.5	.29	0	
10				1.1	41	41	11	4.2	1.4	.27	0	
11				0	237	54	11	4.1	1.4	.25	0	
12				0	208	46	11	3.9	1.4	.24	0	
13				0	279	42	10	3.8	1.3	.23	0	
14				0	165	40	10	3.7	1.3	.22	0	
15				0	88	40	10	3.5	1.2	.21	0	
16				16	54	39	10	3.4	1.2	.20	0	
17				18	50	39	9.6	3.3	1.2	.19	0	
18				82	48	38	9.4	3.2	1.2	.19	0	
19				44	46	42	9.2	3.1	1.1	.18	0	
20				15	44	54	9.0	3.0	1.0	.17	0	
21				9.4	42	47	8.8	2.9	.98	.16	0	
22				6.1	41	44	8.6	2.8	.94	.16	0	
23				2.7	41	41	8.4	2.8	.89	.15	0	
24				2.3	41	39	8.0	2.7	.85	.15	0	
25				3.4	41	39	7.6	2.6	.80	.14	0	
26				1.0	43	38	7.2	2.5	.76	.13	0	
27				.64	53	36	6.8	2.4	.70	.13	0	
28				.27	60	34	6.6	2.3	.66	.13	0	
29				1.1	------	32	6.3	2.2	.62	.12	0	
30				13	------	29	6.0	2.2	.56	.12	0	
31		------		2.3	------	26	------	2.1	------	.11	0	------
TOTAL	0	0	0	218.31	1,657.50	1,311	337.5	111.8	37.16	7.40	.18	0
MEAN	0	0	0	7.04	59.2	42.3	11.3	3.61	1.24	.24	.006	0
MAX	0	0	0	82	279	56	24	5.8	2.0	.52	.10	0
MIN	0	0	0	0	.11	26	6.0	2.1	.56	.11	0	0
AC-FT	0	0	0	433	3,290	2,600	669	222	74	15	.4	0

CAL YR 1972 TOTAL 0.00 MEAN .00 MAX .0 MIN 0 AC-FT 0
WTR YR 1973 TOTAL 3,680.85 MEAN 10.1 MAX 279 MIN 0 AC-FT 7,300

PEAK DISCHARGE (BASE, 60 CFS)

DATE	TIME	G.H.	DISCHARGE	DATE	TIME	G.H.	DISCHARGE
1-16	1400	2.08	64	2-27	2400	2.14	71
1-18	1800	2.66	162	3-3	2400	1.81	61
2-11	0630	3.60	316	3-11	0330	1.84	62
2-13	0500	4.02	385	3-19	2200	2.23	74

NOTE.--No gage-height record Mar. 27 to Aug. 5.

11152650 RECLAMATION DITCH NEAR SALINAS, CALIF.

LOCATION.--Lat 36°42'18", long 121°42'14", in Rincon Del Zanjon Grant, Monterey County, on right bank at upstream side of San Jon Road bridge, and 3.4 miles northwest of Salinas.

PERIOD OF RECORD.--October 1970 to current year.

GAGE.--Water-stage recorder and concrete control. Altitude of gage is 30 ft (from topographic map).

EXTREMES.--Period of record: Maximum daily discharge, 401 cfs Feb. 14, 1973; minimum daily, 0.34 cfs Jan. 2, 1972.

REMARKS.--Records good. Flow is mostly drainage from Carr Lake area for farming.

DISCHARGE, IN CUBIC FEET PER SECOND, WATER YEAR OCTOBER 1972 TO SEPTEMBER 1973

DAY	OCT	NOV	DEC	JAN	FEB	MAR	APR	MAY	JUN	JUL	AUG	SEP
1	4.8	7.0	8.2	1.5	29	70	28	8.0	8.8	7.1	9.8	25
2	4.1	6.4	8.0	2.0	20	54	24	9.3	8.5	6.5	7.3	14
3	6.8	7.3	6.4	4.6	17	50	21	8.4	5.9	8.8	7.0	11
4	7.3	40	14	4.2	16	69	20	12	6.4	7.2	14	11
5	7.3	12	9.3	3.8	13	69	14	9.3	8.8	5.4	16	20
6	7.1	5.1	26	3.5	48	94	14	6.0	10	8.5	14	19
7	6.6	9.6	30	2.0	55	81	13	8.4	12	6.5	16	22
8	4.6	7.5	27	2.5	33	78	9.4	12	12	5.2	21	17
9	2.9	7.3	9.3	3.0	23	67	7.9	8.7	12	5.5	21	13
10	7.3	27	3.9	3.0	48	56	8.0	11	11	8.9	27	11
11	5.2	65	3.6	3.0	226	63	9.3	9.4	10	7.5	31	16
12	15	29	4.4	3.0	325	62	9.3	7.8	10	9.8	24	14
13	12	13	2.2	3.0	389	56	9.5	6.5	11	9.8	15	13
14	11	132	2.7	2.7	401	50	10	6.2	11	11	23	16
15	8.2	143	5.0	2.7	364	42	6.3	9.3	11	9.6	24	15
16	16	152	4.5	44	297	35	7.0	8.8	11	6.1	24	8.2
17	20	64	6.4	58	220	30	5.9	9.3	11	9.8	23	5.9
18	15	37	3.8	84	152	28	7.0	8.7	11	8.4	22	8.9
19	7.3	19	12	128	92	39	7.7	7.6	11	4.8	21	10
20	7.1	10	6.1	78	60	172	10	6.6	11	6.2	19	11
21	7.0	11	5.2	53	52	176	9.8	6.5	9.4	4.5	23	15
22	4.1	11	4.8	40	44	176	8.1	7.4	8.8	4.6	19	13
23	2.7	8.4	3.9	32	36	127	6.1	7.1	8.9	6.2	23	8.2
24	5.7	5.6	2.8	26	32	84	8.5	7.1	6.7	8.6	23	5.9
25	6.2	9.1	2.4	34	28	61	11	7.1	7.5	8.6	21	10
26	7.0	7.5	2.4	34	38	51	10	5.5	9.3	9.3	17	15
27	4.4	6.4	3.2	24	51	40	8.8	4.9	9.5	8.6	16	17
28	7.0	8.4	6.4	19	101	40	7.0	3.6	7.9	10	26	14
29	4.1	7.7	5.0	23	------	36	6.0	4.9	8.2	13	30	13
30	2.8	8.6	3.8	44	------	33	7.0	6.8	8.4	8.4	26	11
31	7.7	------	1.8	44	------	32	------	8.8	------	13	29	------
TOTAL	234.3	876.9	234.5	809.5	3,210	2,121	323.6	243.0	288.0	247.4	632.1	403.1
MEAN	7.56	29.2	7.56	26.1	115	68.4	10.8	7.84	9.60	7.98	20.4	13.4
MAX	20	152	30	128	401	176	28	12	12	13	31	25
MIN	2.7	5.1	1.8	1.5	13	28	5.9	3.6	5.9	4.5	7.0	5.9
AC-FT	465	1,740	465	1,610	6,370	4,210	642	482	571	491	1,250	800

CAL YR 1972 TOTAL 2,589.28 MEAN 7.07 MAX 152 MIN .34 AC-FT 5,140
WTR YR 1973 TOTAL 9,623.40 MEAN 26.4 MAX 401 MIN 1.5 AC-FT 19,090

11152900 CEDAR CREEK NEAR BELL STATION, CALIF.

LOCATION.--Lat 37°03'00", long 121°19'35", in San Luis Gonzaga Grant, Santa Clara County, on left bank 0.5 mile upstream from Hagerman Canyon, and 1.3 miles northwest of Bell Station.

DRAINAGE AREA.--12.8 sq mi.

PERIOD OF RECORD.--October 1961 to current year.

GAGE.--Water-stage recorder. Altitude of gage is 390 ft (from topographic map).

AVERAGE DISCHARGE.--12 years, 4.46 cfs (3,230 acre-ft per year).

EXTREMES.--Current year: Maximum discharge, 677 cfs Jan. 9 (gage height, 3.99 ft); no flow many days.
Period of record: Maximum discharge, 3,490 cfs Jan. 31, 1963 (gage height, 6.85 ft), from rating curve extended above 560 cfs on basis of slope-area measurement at gage height 4.66 ft; no flow for several months in each year.

REMARKS.--Records good. No regulation or diversion above station.

DISCHARGE, IN CUBIC FEET PER SECOND, WATER YEAR OCTOBER 1972 TO SEPTEMBER 1973

DAY	OCT	NOV	DEC	JAN	FEB	MAR	APR	MAY	JUN	JUL	AUG	SEP
1	0	0	.20	.16	6.5	30	3.9	.61	.24	.05	.01	0
2	0	0	.20	.13	5.3	19	3.5	.61	.24	.05	.01	0
3	0	0	.20	.13	4.3	18	3.1	.61	.20	.04	.01	0
4	0	.06	.20	.13	4.0	20	2.7	.61	.20	.05	.01	0
5	0	.01	.16	.13	4.0	14	2.6	.61	.24	.04	.01	0
6	0	0	.34	.13	79	18	2.4	.61	.20	.03	.01	0
7	0	0	1.3	.12	63	16	2.2	.53	.16	.03	.01	0
8	0	.01	.90	3.4	31	17	2.1	.53	.16	.03	.01	0
9	0	0	.61	217	18	13	1.9	.53	.13	.04	.01	0
10	0	.10	.53	61	118	12	1.7	.46	.13	.03	.01	0
11	0	.08	.46	21	173	12	1.7	.34	.16	.03	.01	0
12	0	.02	.40	16	106	9.5	1.6	.34	.16	.03	.01	0
13	0	.13	.40	8.4	178	7.8	3.0	.34	.16	.04	.01	0
14	0	72	.29	5.1	83	6.7	3.3	.34	.16	.04	.01	0
15	0	97	.29	3.8	53	5.7	1.9	.34	.13	.04	0	0
16	.01	56	.24	159	36	5.1	1.7	.29	.13	.05	0	0
17	.01	26	.24	74	23	4.6	1.4	.29	.13	.05	0	0
18	0	6.5	.24	75	17	4.3	1.1	.29	.10	.05	0	0
19	0	2.4	.24	47	12	7.7	1.1	.29	.10	.05	0	0
20	0	1.1	.24	23	9.6	30	1.0	.29	.08	.05	0	.01
21	0	.70	.24	16	7.6	15	1.0	.29	.06	.05	0	.01
22	0	.53	.29	9.4	6.3	14	1.0	.24	.08	.04	0	.01
23	0	.40	.29	6.1	5.2	10	.90	.24	.08	.03	0	.01
24	0	.34	.24	4.5	5.3	8.7	.80	.24	.06	.02	0	0
25	0	.34	.24	4.6	4.5	7.8	.80	.29	.06	.02	0	0
26	0	.29	.24	4.0	6.9	6.7	.80	.24	.06	.02	0	0
27	0	.24	.20	2.9	38	6.1	.80	.24	.05	.02	0	0
28	0	.24	.20	2.5	70	5.5	.80	.24	.06	.01	0	0
29	0	.20	.16	2.4	------	4.9	.80	.20	.06	.01	0	0
30	0	.20	.16	14	------	4.6	.70	.20	.05	.01	0	0
31	0	------	.16	9.5	------	4.8	------	.24	------	.01	0	------
TOTAL	.02	264.89	10.10	790.53	1,167.5	358.5	52.30	11.52	3.83	1.06	.14	.04
MEAN	.0006	8.83	.33	25.5	41.7	11.6	1.74	.37	.13	.034	.005	.001
MAX	.01	97	1.3	217	178	30	3.9	.61	.24	.05	.01	.01
MIN	0	0	.16	.12	4.0	4.3	.70	.20	.05	.01	0	0
AC-FT	.04	525	20	1,570	2,320	711	104	23	7.6	2.1	.3	.08

CAL YR 1972 TOTAL 340.07 MEAN .93 MAX 97 MIN 0 AC-FT 675
WTR YR 1973 TOTAL 2,660.43 MEAN 7.29 MAX 217 MIN 0 AC-FT 5,280

PEAK DISCHARGE (BASE, 150 CFS)

DATE	TIME	G.H.	DISCHARGE	DATE	TIME	G.H.	DISCHARGE
11-15	2115	3.47	435	2-6	1815	2.66	162
1-9	1545	3.99	677	2-10	0330	3.13	305
1-16	1245	3.76	564	2-13	0500	3.20	330
1-18	1415	2.64	158				

11153000 PACHECO CREEK NEAR DUNNEVILLE, CALIF.

LOCATION.--Lat 36°58'48", long 121°22'45", in Ausaymas y San Felipe Grant, Santa Clara County, on right bank 350 ft downstream from private road bridge, and 3.3 miles northeast of Dunneville.

DRAINAGE AREA.--146 sq mi.

PERIOD OF RECORD.--October 1939 to current year. Monthly discharge only prior to January 1940, published in WSP 1315-B.

GAGE.--Water-stage recorder. Datum of gage is 230.70 ft above mean sea level. Prior to Nov. 17, 1950, nonrecording gage at site 350 ft upstream at datum 6.00 ft higher and Nov. 17, 1950, to Aug. 18, 1960, at datum 4.00 ft higher.

AVERAGE DISCHARGE.--34 years, 34.2 cfs (24,780 acre-ft per year).

EXTREMES.--Current year: Maximum discharge, 3,630 cfs Feb. 11 (gage height, 11.68 ft); no flow for several months.

Period of record: Maximum discharge, 12,600 cfs Dec. 23, 1955 (gage height, 21.0 ft, present site and datum, from floodmarks), from rating curve extended above 5,400 cfs on basis of slope-area measurement of maximum flow; no flow at times.

REMARKS.--Records good. Flow regulated by Pacheco Lake 9 miles upstream (capacity, 6,150 acre-ft). Small diversions above station for irrigation.

DISCHARGE, IN CUBIC FEET PER SECOND, WATER YEAR OCTOBER 1972 TO SEPTEMBER 1973

DAY	OCT	NOV	DEC	JAN	FEB	MAR	APR	MAY	JUN	JUL	AUG	SEP
1		0		0	99	280	45	1.5	.01	13	4.5	4.5
2		0		0	80	179	40	1.6	0	12	4.6	4.4
3		0		0	69	152	35	1.9	0	12	4.7	4.4
4		0		0	61	175	32	2.0	0	12	4.7	4.4
5		0		0	68	133	30	2.1	0	12	4.8	4.6
6		0		0	430	157	29	1.9	0	12	5.2	4.6
7		0		0	672	199	27	1.8	0	12	5.2	4.5
8		0		0	281	178	23	1.6	0	12	5.2	4.4
9		0		818	178	150	20	1.4	0	11	5.2	3.8
10		0		457	832	126	17	1.4	0	11	5.3	3.5
11		0		154	2,290	155	16	1.2	0	11	5.1	4.3
12		0		105	1,270	121	14	1.1	0	11	5.2	4.4
13		0		73	2,150	98	16	.92	0	11	5.2	4.5
14		13		52	954	83	38	.89	0	11	4.8	4.7
15		492		40	619	71	20	.74	0	11	4.5	4.5
16		430		644	389	63	14	.67	0	8.8	4.2	4.6
17		176		919	273	58	10	.58	4.1	7.2	4.1	4.5
18		41		854	204	52	8.8	.45	11	6.7	4.3	4.4
19		4.7		571	162	58	7.2	.36	13	6.6	4.2	4.4
20		0		265	135	241	5.7	.30	14	6.1	3.8	4.4
21		0		185	115	163	4.6	.25	15	6.0	3.3	4.5
22		0		140	98	160	3.5	.20	16	5.9	3.8	4.5
23		0		98	86	114	3.2	.16	18	5.3	4.2	4.7
24		0		76	80	91	3.0	.13	18	5.2	4.4	4.8
25		0		79	78	79	2.5	.09	16	5.0	4.5	4.7
26		0		82	84	71	2.2	.06	14	4.8	4.6	4.3
27		0		62	211	65	1.9	.05	14	4.8	4.5	4.0
28		0		58	637	59	1.7	.04	14	4.9	4.6	3.8
29		0		47	------	51	1.7	.02	13	4.8	4.3	4.2
30		0		119	------	49	1.5	.02	13	4.7	4.2	4.5
31		------		134	------	54	------	.01	------	4.7	4.2	------
TOTAL	0	1,156.7	0	6,032	12,605	3,685	473.5	25.44	193.11	265.5	141.4	131.8
MEAN	0	38.6	0	195	450	119	15.8	.82	6.44	8.56	4.56	4.39
MAX	0	492	0	919	2,290	280	45	2.1	18	13	5.3	4.8
MIN	0	0	0	0	61	49	1.5	.01	0	4.7	3.3	3.5
AC-FT	0	2,290	0	11,960	25,000	7,310	939	50	383	527	280	261

CAL YR 1972 TOTAL 1,253.28 MEAN 3.42 MAX 492 MIN 0 AC-FT 2,490
WTR YR 1973 TOTAL 24,709.45 MEAN 67.7 MAX 2,290 MIN 0 AC-FT 49,010

11153470 LLAGAS CREEK ABOVE CHESBRO RESERVOIR, NEAR MORGAN HILL, CALIF.

LOCATION.--Lat 37°08'54", long 121°46'02", in Pueblo Lands of San Jose Grant, Santa Clara County, on left bank 200 ft upstream from small left-bank tributary, 5.7 miles upstream from Chesbro Dam, and 6.4 miles west of Morgan Hill.

DRAINAGE AREA.--9.61 sq mi.

PERIOD OF RECORD.--October 1971 to current year.

GAGE.--Water-stage recorder and concrete control. Altitude of gage is 670 ft (from topographic map).

EXTREMES.--Current year: Maximum discharge, 795 cfs Jan. 16 (gage height, 6.18 ft), from rating curve extended as explained below; no flow many days.
Period of record: Maximum discharge, 795 cfs Jan. 16, 1973 (gage height, 6.18 ft), from rating curve extended above 180 cfs on basis of slope-area measurement at gage height 5.56 ft; no flow many days in each year.

REMARKS.--Records good. No regulation or diversion above station. Records of water temperatures and total-sediment discharge for the current year are published in Part 2 of this report.

DISCHARGE, IN CUBIC FEET PER SECOND, WATER YEAR OCTOBER 1972 TO SEPTEMBER 1973

DAY	OCT	NOV	DEC	JAN	FEB	MAR	APR	MAY	JUN	JUL	AUG	SEP
1	0	0	2.2	.63	10	69	14	5.2	2.0	.39		
2	0	0	1.8	.63	8.0	57	13	4.8	2.0	.39		
3	0	0	1.8	.63	12	52	13	4.8	2.0	.33		
4	0	.29	2.2	.63	16	49	13	4.8	1.8	.27		
5	0	.14	1.8	.63	10	44	13	4.8	1.6	.27		
6	0	.09	5.6	.61	170	52	12	4.4	1.4	.27		
7	0	.14	4.0	.47	266	45	11	4.4	1.4	.33		
8	0	.14	3.0	2.8	130	48	11	4.0	1.4	.27		
9	0	.09	2.8	128	99	41	11	4.0	1.4	.26		
10	.30	.74	2.5	56	192	38	9.9	3.7	1.4	.22		
11	.20	2.7	2.5	31	153	35	9.9	3.7	1.4	.22		
12	.30	.80	2.2	24	123	32	9.3	3.3	1.4	.22		
13	.40	37	2.0	18	112	30	9.3	3.3	1.4	.18		
14	.50	79	2.0	15	124	27	9.3	3.3	1.4	.07		
15	.60	92	1.8	14	103	25	8.7	3.3	1.4	.18		
16	.30	52	1.8	333	81	23	8.7	3.0	1.4	.22		
17	1.0	25	1.8	161	65	21	8.1	2.8	1.1	.22		
18	.50	13	1.6	283	53	19	7.5	2.8	.98	.27		
19	.10	9.0	1.6	142	44	27	7.5	2.8	.85	.27		
20	0	7.5	1.4	80	39	32	7.0	2.8	.63	.27		
21	0	6.3	1.4	52	37	28	7.0	2.8	.63	.22		
22	0	5.6	1.3	37	32	25	6.5	2.8	.63	.14		
23	0	4.8	1.3	28	29	22	6.5	2.5	.74	.01		
24	0	4.2	1.1	23	32	20	6.0	2.8	.74	.11		
25	0	3.4	1.1	20	26	18	6.0	2.5	.54	0		
26	0	3.0	1.1	17	66	17	5.6	2.5	.46	0		
27	0	3.0	.98	15	114	16	5.6	2.2	.46	0		
28	0	2.7	.98	13	90	15	5.6	2.2	.54	0		
29	0	2.2	.85	26	------	13	5.6	2.0	.46	0		
30	0	2.2	.85	33	------	14	5.2	2.0	.46	0		
31	0	------	.85	15	------	14	------	2.0	------	0		------
TOTAL	4.20	357.03	58.21	1,571.03	2,236.0	968	265.8	102.3	34.02	5.60	0	0
MEAN	.14	11.9	1.88	50.7	79.9	31.2	8.86	3.30	1.13	.18	0	0
MAX	1.0	92	5.6	333	266	69	14	5.2	2.0	.39	0	0
MIN	0	0	.85	.47	8.0	13	5.2	2.0	.46	0	0	0
AC-FT	8.3	708	115	3,120	4,440	1,920	527	203	67	11	0	0

CAL YR 1972 TOTAL 806.72 MEAN 2.20 MAX 92 MIN 0 AC-FT 1,600
WTR YR 1973 TOTAL 5,602.19 MEAN 15.3 MAX 333 MIN 0 AC-FT 11,110

PEAK DISCHARGE (BASE, 200 CFS)

DATE	TIME	G.H.	DISCHARGE	DATE	TIME	G.H.	DISCHARGE
11-15	1915	4.50	375	2-6	2145	5.15	537
1-9	1415	4.20	298	2-10	0015	4.53	382
1-16	0900	6.18	795	2-27	1515	4.01	252

RESERVOIRS IN PAJARO RIVER BASIN, CALIF.

11153480 CHESBRO RESERVOIR.--Lat 37°07'00", long 121°41'34", near southwest boundary of Ojo de Agua de la Coche Grant, Santa Clara County, at left end of dam on Llagas Creek, and 2.5 miles west of Morgan Hill. Drainage area, 19.3 sq mi. Period of record, December 1955 to current year. Monthly contents prior to October 1959 published in WSP 1735. Nonrecording gage read once daily. Datum of gage is at mean sea level (levels by South Santa Clara Valley Water Conservation District). Extremes for current year: Maximum contents observed, 8,220 acre-ft Feb. 10 (elevation, 525.5 ft); minimum observed, 262 acre-ft Nov. 13 (elevation, 472.0 ft). Extremes for period of record: Maximum contents observed, 8,100 acre-ft Feb. 24, 1969 (elevation, 527.4 ft); no contents at times in 1957, 1960-62.

Reservoir is formed by earth- and rockfill dam completed in 1955. Capacity, 8,090 acre-ft (revised) between elevations 465 (elevation of outlet gates) and 525 ft (crest of spillway). Reservoir is used for flood control and water released down Llagas Creek for irrigation. Record of contents furnished by Santa Clara Valley Water District.

11154020 UVAS RESERVOIR.--Lat 37°04'02", long 121°41'25", in Las Uvas Grant, Santa Clara County, at center of dam on Uvas Creek, and 4.8 miles southwest of Morgan Hill. Drainage area, 30.4 sq mi. Period of record, December 1957 to current year. Monthly contents prior to October 1959 published in WSP 1735. Nonrecording gage read once daily. Datum of gage is at mean sea level (levels by South Santa Clara Valley Water Conservation District). Extremes for current year: Maximum contents observed, 11,000 acre-ft Feb. 7 (elevation, 490.29 ft); minimum observed, 348 acre-ft Oct. 14 (elevation, 423.5 ft). Extremes for period of record: Maximum contents observed, 11,030 acre-ft Mar. 16, 1967 (elevation, 490.5 ft); no contents May 18 to Nov. 30, 1961.

Reservoir is formed by earth- and rockfill dam completed in 1957. Capacity, 10,000 acre-ft between elevations 410 (hydraulic gate valves) and 487.5 ft (crest of spillway). Water released down Uvas Creek for irrigation; at times diverted into Llagas Creek 3.6 miles below Chesbro Reservoir for ground-water recharge by percolation. Record of contents furnished by Santa Clara Valley Water District.

MONTHEND CONTENTS, IN ACRE-FEET (INCLUDING MOMENTARY STORAGE ABOVE SPILLWAY CREST), WATER YEAR OCTOBER 1972 TO SEPTEMBER 1973

Date	Chesbro Reservoir	Uvas Reservoir
Sept. 30, 1972..	390	392
Oct. 31.....	330	364
Nov. 30.....	900	3,340
Dec. 31.....	674	1,530
Jan. 31, 1973...	5,510	10,040
Feb. 28.....	8,110	10,160
Mar. 31.....	6,470	9,600
Apr. 30.....	6,860	9,100
May 31.....	6,660	7,850
June 30.....	6,620	6,120
July 31.....	4,980	4,540
Aug. 31.....	3,240	3,270
Sept. 30.....	1,420	2,060

NOTE.--Contents at 0800 on first day of following month.

11153700 PAJARO RIVER NEAR GILROY, CALIF.

LOCATION.--Lat 36°56'54", long 121°30'40", on boundary between Las Animas and Llano del Tequisquita Grants, Santa Clara County, on right bank 45 ft upstream from bridge on State Highway 25, 0.9 mile downstream from Llagas Creek, and 4.7 miles southeast of Gilroy.

DRAINAGE AREA.--399 sq mi.

PERIOD OF RECORD.--March 1959 to current year.

GAGE.--Water-stage recorder. Datum of gage is 123.88 ft above mean sea level (levels by Corps of Engineers). Prior to Nov. 17, 1971, at site 45 ft downstream at same datum.

AVERAGE DISCHARGE.--14 years, 57.6 cfs (41,730 acre-ft per year).

EXTREMES.--Current year: Maximum discharge, 2,910 cfs Feb. 13 (gage height, 10.82 ft); minimum daily, 0.59 cfs Nov. 1.
Period of record: Maximum discharge, 12,900 cfs Jan. 25, 1969 (gage height, 14.63 ft), from rating curve extended above 4,800 cfs; no flow many days in 1961-62, 1971.

REMARKS.--Records fair. Flow regulated by Pacheco Lake (capacity, 6,150 acre-ft), Chesbro Reservoir 21 miles upstream (see sta 11153480) and San Felipe Lake. Many diversions above station for irrigation.

DISCHARGE, IN CUBIC FEET PER SECOND, WATER YEAR OCTOBER 1972 TO SEPTEMBER 1973

DAY	OCT	NOV	DEC	JAN	FEB	MAR	APR	MAY	JUN	JUL	AUG	SEP
1	4.0	.59	3.0	1.9	177	451	90	18	15	9.1	7.2	3.4
2	3.6	.69	2.6	1.8	152	403	81	17	13	9.1	7.5	2.8
3	3.6	.69	2.3	1.7	125	355	74	18	13	9.7	6.2	1.3
4	2.8	1.7	2.3	1.6	105	352	66	20	12	9.1	6.2	1.3
5	2.6	1.6	2.2	1.5	102	334	54	19	13	7.8	9.4	.69
6	.69	.92	3.8	.69	449	352	48	17	12	8.4	10	2.1
7	2.8	.80	18	.80	803	385	43	17	12	6.8	13	3.4
8	2.8	.80	13	1.4	472	385	39	17	12	7.8	8.1	1.2
9	3.8	.69	9.6	219	412	340	37	16	10	8.4	8.1	1.4
10	2.1	2.8	7.6	944	872	307	36	15	12	9.1	8.8	2.2
11	3.8	3.8	6.1	693	1,890	313	33	15	11	8.8	14	1.9
12	4.7	1.9	4.8	400	1,770	310	32	15	10	9.1	12	7.2
13	5.2	1.7	3.9	235	2,750	286	32	14	11	6.6	9.4	1.7
14	2.5	59	3.2	141	2,620	265	36	14	10	7.2	11	3.8
15	1.9	385	2.9	84	1,720	242	43	13	10	8.1	5.7	2.0
16	1.6	349	2.9	544	1,190	225	39	12	11	7.5	5.2	2.0
17	2.5	201	2.8	760	888	211	35	13	11	6.6	6.6	3.6
18	1.4	152	2.8	873	654	199	32	14	10	7.5	8.8	2.3
19	1.0	85	2.8	964	522	196	29	14	12	7.9	8.4	1.2
20	1.0	43	2.9	654	439	283	28	15	10	7.2	6.6	1.6
21	.92	23	3.1	497	355	325	29	15	8.8	6.9	6.2	2.2
22	1.0	14	3.3	412	278	334	28	16	7.8	7.2	4.2	1.9
23	1.0	9.4	3.0	340	230	292	25	17	8.1	7.2	6.0	3.8
24	1.2	6.6	2.7	275	199	255	25	15	9.1	6.9	8.1	1.7
25	2.6	4.9	2.5	206	170	225	25	14	10	8.1	6.2	4.9
26	2.0	4.0	2.4	170	165	199	25	14	11	7.2	7.2	4.7
27	1.2	4.0	2.4	127	301	177	21	16	10	5.2	3.0	3.1
28	.92	4.0	2.3	92	570	154	21	14	9.7	5.4	3.6	2.7
29	.92	3.6	2.2	75	------	133	18	12	7.5	7.2	5.7	3.8
30	.80	3.4	2.1	291	------	107	17	13	9.1	7.2	7.8	4.4
31	.69	------	2.0	216	------	98	------	13	------	6.2	3.8	------
TOTAL	67.64	1,369.58	127.5	9,223.39	20,380	8,493	1,141	472	321.1	236.5	234.0	80.29
MEAN	2.18	45.7	4.11	298	728	274	38.0	15.2	10.7	7.63	7.55	2.68
MAX	5.2	385	18	964	2,750	451	90	20	15	9.7	14	7.2
MIN	.69	.59	2.0	.69	102	98	17	12	7.5	5.2	3.0	.69
AC-FT	134	2,720	253	18,290	40,420	16,850	2,260	936	637	469	464	159

CAL YR 1972 TOTAL 2,783.82 MEAN 7.6 MAX 385 MIN .59 AC-FT 5,520
WTR YR 1973 TOTAL 42,146.00 MEAN 115 MAX 2,750 MIN .59 AC-FT 83,600

NOTE.--No gage-height record Dec. 6 to Jan. 5.

11153790 UVAS CREEK AT SVEADAL, CALIF.

LOCATION.--Lat 37°05'25", long 121°48'13", in NE¼SE¼ sec.1, T.10 S., R.1 E., Santa Clara County, on right bank 0.4 mile downstream from small left-bank tributary, 0.7 mile upstream from Swanson Creek, 0.9 mile northwest of Sveadal, and 8.7 miles southwest of Morgan Hill.

DRAINAGE AREA.--2.88 sq mi.

PERIOD OF RECORD.--October 1972 to September 1973.

GAGE.--Water-stage recorder. Altitude of gage is 1,120 ft (from topographic map).

EXTREMES.--Current year: Maximum discharge, 345 cfs Jan. 16 (gage height, 5.00 ft, from outside high-water marks), from rating curve extended above 50 cfs on basis of slope-area measurement at gage height 5.10 ft; minimum daily, 0.26 cfs Oct. 7.

REMARKS.--Records good except those for period of no gage-height record, which are fair. No regulation or diversion above station.

DISCHARGE, IN CUBIC FEET PER SECOND, WATER YEAR OCTOBER 1972 TO SEPTEMBER 1973

DAY	OCT	NOV	DEC	JAN	FEB	MAR	APR	MAY	JUN	JUL	AUG	SEP
1	.28	.38	2.4	1.6	14	33	11	4.9	2.5	1.4	.86	.77
2	.28	.38	2.3	1.6	13	29	11	4.8	2.4	1.4	.86	.77
3	.28	.44	2.4	1.6	18	28	10	4.7	2.4	1.4	.81	.72
4	.28	1.5	2.5	1.5	19	26	10	4.6	2.3	1.3	.81	.72
5	.30	.62	2.3	1.5	16	24	9.8	4.5	2.3	1.4	.81	.81
6	.28	.47	3.3	1.5	56	29	9.5	4.4	2.3	1.5	.81	.77
7	.26	.66	2.7	1.5	93	26	9.2	4.2	2.2	1.4	.81	.77
8	.28	.58	2.5	2.3	51	27	9.0	4.1	2.2	1.5	.81	.81
9	.41	.50	2.2	52	43	24	8.8	4.0	2.1	1.3	.81	.81
10	.91	2.1	2.1	22	72	23	8.6	3.9	2.1	1.3	.81	.90
11	.38	3.4	2.1	14	60	22	8.3	3.9	2.0	1.3	.77	.90
12	.72	1.5	2.1	13	52	20	8.1	3.8	2.0	1.3	.81	.90
13	.54	8.1	2.0	11	55	19	7.8	3.7	2.0	1.3	.77	.90
14	1.0	27	1.9	11	67	17	7.6	3.6	1.9	1.3	.77	.95
15	.85	32	1.9	10	52	16	7.4	3.5	1.9	1.3	.72	.95
16	1.1	17	1.8	114	42	15	7.2	3.5	1.8	1.3	.72	.95
17	1.3	7.8	1.9	55	37	15	7.0	3.4	1.8	1.3	.72	.95
18	.66	5.6	1.8	89	34	14	6.7	3.3	1.8	1.3	.72	.90
19	.50	4.5	2.0	50	30	16	6.6	3.2	1.7	1.3	.72	.90
20	.47	4.0	1.8	32	27	19	6.5	3.2	1.7	1.3	.72	.95
21	.44	3.6	1.8	25	24	18	6.3	3.1	1.7	1.2	.77	.90
22	.41	3.3	2.1	21	22	17	6.1	3.0	1.6	1.1	.81	.90
23	.41	3.1	1.9	17	21	16	6.0	3.0	1.6	1.1	.81	.95
24	.38	3.0	1.9	15	22	15	5.9	2.9	1.6	1.0	.81	.95
25	.35	2.8	1.8	14	19	15	5.7	2.9	1.6	.95	.86	.90
26	.38	2.7	1.7	12	28	14	5.5	2.8	1.5	.95	.86	.86
27	.41	2.7	1.7	11	46	13	5.4	2.8	1.5	.95	.81	.81
28	.41	2.6	1.7	11	40	13	5.3	2.7	1.5	.90	.77	.81
29	.38	2.5	1.7	15	------	13	5.2	2.6	1.5	.90	.77	.81
30	.38	2.5	1.7	24	------	12	5.0	2.6	1.4	.90	.72	.81
31	.38	------	1.6	16	------	11	------	2.5	------	.86	.77	------
TOTAL	15.41	147.33	63.6	667.1	1,073	599	226.5	110.1	56.9	37.71	24.40	25.80
MEAN	.50	4.91	2.05	21.5	38.3	19.3	7.55	3.55	1.90	1.22	.79	.86
MAX	1.3	32	3.3	114	93	33	11	4.9	2.5	1.5	.86	.95
MIN	.26	.38	1.6	1.5	13	11	5.0	2.5	1.4	.86	.72	.72
AC-FT	31	292	126	1,320	2,130	1,190	449	218	113	75	48	51

WTR YR 1973 TOTAL 3,046.85 MEAN 8.35 MAX 114 MIN .26 AC-FT 6,040

PEAK DISCHARGE (BASE, 80 CFS)

DATE	TIME	G.H.	DISCHARGE	DATE	TIME	G.H.	DISCHARGE
11-15	1900	3.60	144	2-9	2345	3.44	125
1-9	1515	3.47	128	2-14	0945	3.20	98
1-16	0900	5.00	345	2-27	1500	3.17	95
2-6	2015	3.44	125				

NOTE.--No gage-height record Mar. 30 to July 5.

11153900 UVAS CREEK ABOVE UVAS RESERVOIR, NEAR MORGAN HILL, CALIF.

LOCATION.--Lat 37°05'34", long 121°43'02", in Las Uvas Grant, Santa Clara County, on left bank 0.6 mile downstream from Little Uvas Creek, 0.9 mile upstream from Hay Canyon, and 4.4 miles southwest of Morgan Hill.

DRAINAGE AREA.--21.0 sq mi.

PERIOD OF RECORD.--July 1961 to current year.

GAGE.--Water-stage recorder. Datum of gage is 486.47 ft above mean sea level.

AVERAGE DISCHARGE.--12 years, 27.9 cfs (20,210 acre-ft per year).

EXTREMES.--Current year: Maximum discharge, 3,230 cfs Jan. 16 (gage height, 9.71 ft); minimum daily, 0.18 cfs Oct. 7.
Period of record: Maximum discharge, 6,580 cfs Oct. 13, 1962 (gage height, 13.18 ft); no flow July 12 to Oct. 22, 1961, Oct. 1, 1964.

REMARKS.--Records fair. Minor regulation and diversion above station affects low flows. Records of water temperatures and total-sediment discharge for the current year are published in Part 2 of this report.

DISCHARGE, IN CUBIC FEET PER SECOND, WATER YEAR OCTOBER 1972 TO SEPTEMBER 1973

DAY	OCT	NOV	DEC	JAN	FEB	MAR	APR	MAY	JUN	JUL	AUG	SEP
1	.19	.75	5.5	4.5	60	164	30	11	4.6	1.7	1.1	.40
2	.25	.79	5.0	4.5	54	124	29	11	4.6	1.9	1.1	.46
3	.31	.87	4.7	4.8	82	112	27	11	4.5	1.4	1.1	.59
4	.29	3.9	5.9	4.4	102	106	26	11	4.3	1.5	.85	.43
5	.26	2.3	4.9	4.3	77	94	24	11	4.3	1.0	.90	.59
6	.24	1.6	36	4.3	506	170	24	10	4.3	1.5	1.2	.55
7	.18	1.9	18	4.1	886	115	22	10	3.7	1.5	1.1	.55
8	.20	2.2	14	20	303	142	21	10	3.5	1.6	1.1	.32
9	.21	1.8	11	916	236	102	21	9.7	3.6	1.7	.90	.32
10	1.6	6.9	9.6	178	526	91	20	9.4	4.1	1.3	1.1	.55
11	.94	24	8.7	78	388	84	19	9.1	4.0	1.5	.90	.40
12	1.1	7.4	7.8	67	309	72	19	8.8	4.0	1.5	.75	.59
13	1.5	235	7.5	52	327	64	19	8.5	3.7	1.5	.96	.49
14	2.0	499	7.2	44	438	58	18	8.5	3.7	1.3	.71	.67
15	3.2	420	6.9	40	294	53	17	8.2	3.1	1.3	.80	.63
16	2.4	183	6.5	1,050	221	50	17	7.5	3.5	1.7	.52	.63
17	7.6	56	6.8	367	170	46	16	7.3	3.3	1.4	.63	.71
18	3.7	31	6.4	663	132	43	15	6.8	3.2	1.7	.49	.52
19	1.7	21	6.7	297	108	92	15	6.8	3.1	1.4	.49	.55
20	1.3	17	6.5	178	95	88	14	6.8	2.6	1.6	.71	.46
21	1.1	14	6.4	121	79	73	14	6.8	2.3	1.6	.46	.67
22	1.0	11	7.1	92	70	62	13	6.6	2.2	1.5	.63	.55
23	.93	10	6.9	74	62	54	13	6.4	2.5	1.5	.52	.63
24	.78	8.9	6.6	64	78	50	13	5.9	2.1	1.3	.67	.71
25	.73	8.0	6.4	60	59	47	12	5.5	2.5	1.3	.55	.52
26	.73	7.0	6.1	52	195	45	12	5.2	2.4	.85	.55	.67
27	.72	6.6	6.1	46	399	41	12	5.7	2.0	.90	.85	.40
28	.74	6.2	6.1	42	255	38	12	5.4	1.9	.96	.63	.46
29	.73	5.9	5.7	58	------	36	12	5.0	2.1	1.0	.63	.30
30	.69	5.7	5.2	150	------	35	12	4.6	1.9	1.2	.43	.37
31	.72	------	5.0	73	------	34	------	4.6	------	.96	.52	------
TOTAL	38.04	1,599.71	253.2	4,812.9	6,511	2,385	538	244.1	97.6	43.07	23.85	15.69
MEAN	1.23	53.3	8.17	155	233	76.9	17.9	7.87	3.25	1.39	.77	.52
MAX	7.6	499	36	1,050	886	170	30	11	4.6	1.9	1.2	.71
MIN	.18	.75	4.7	4.1	54	34	12	4.6	1.9	.85	.43	.30
AC-FT	75	3,170	502	9,550	12,910	4,730	1,070	484	194	85	47	31

CAL YR 1972 TOTAL 3,068.03 MEAN 8.38 MAX 499 MIN .03 AC-FT 6,090
WTR YR 1973 TOTAL 16,562.16 MEAN 45.4 MAX 1,050 MIN .18 AC-FT 32,850

PEAK DISCHARGE (BASE, 800 CFS)

DATE	TIME	G.H.	DISCHARGE	DATE	TIME	G.H.	DISCHARGE
11-15	1945	7.15	1,360	2-10	0045	7.05	1,030
1-9	1245	7.73	1,760	2-14	1000	6.84	904
1-16	0930	9.71	3,230	2-27	1445	7.20	1,120
2-6	2215	8.74	2,290				

11154100 BODFISH CREEK NEAR GILROY, CALIF.

LOCATION.--Lat 37°00'15", long 121°39'58", in Las Animas Grant, Santa Clara County, on left bank just upstream from Whitehurst Creek, 2.7 miles upstream from mouth, and 5.1 miles west of west city limits of Gilroy.

DRAINAGE AREA.--7.40 sq mi.

PERIOD OF RECORD.--October 1959 to current year.

GAGE.--Water-stage recorder and concrete control. Altitude of gage is 360 ft (from topographic map).

AVERAGE DISCHARGE.--14 years, 3.59 cfs (2,600 acre-ft per year).

EXTREMES.--Current year: Maximum discharge, 338 cfs Jan. 16 (gage height, 5.86 ft); no flow many days.
Period of record: Maximum discharge, 1,240 cfs Jan. 31, 1963 (gage height, 8.25 ft), from rating curve extended above 580 cfs; no flow at times.

REMARKS.--Records good. No regulation or diversion above station.

REVISIONS (WATER YEARS).--WRD Calif. 1969: 1967(P).

DISCHARGE, IN CUBIC FEET PER SECOND, WATER YEAR OCTOBER 1972 TO SEPTEMBER 1973

DAY	OCT	NOV	DEC	JAN	FEB	MAR	APR	MAY	JUN	JUL	AUG	SEP
1	0	0	.33	.48	6.7	24	7.6	2.1	1.0	.56	.12	.06
2	0	0	.33	.48	5.8	18	7.0	2.1	1.0	.48	.12	.04
3	0	0	.33	.48	5.8	16	5.8	1.8	1.0	.48	.12	.04
4	0	1.6	.90	.56	5.8	18	4.8	1.8	1.0	.40	.10	.06
5	0	.15	.40	.48	5.5	17	4.5	2.1	.90	.40	.12	.06
6	0	.04	11	.48	39	23	5.0	1.8	.66	.40	.12	.04
7	0	.03	4.8	.48	54	19	5.0	1.6	.56	.48	.12	.04
8	0	.03	3.5	3.2	22	26	4.5	1.6	.66	.33	.12	.04
9	0	.02	2.3	63	16	19	4.5	1.6	.66	.33	.12	.04
10	0	.66	1.6	25	64	19	4.2	1.6	.56	.33	.10	.06
11	0	1.0	1.3	9.5	72	21	4.2	1.5	.66	.33	.10	.06
12	0	.48	1.2	7.0	56	16	4.0	1.6	.66	.33	.10	.04
13	0	3.5	1.0	5.3	124	14	4.2	1.6	.56	.33	.08	.06
14	0	49	.90	4.2	75	12	4.0	1.5	.66	.40	.08	.06
15	0	29	.78	3.7	44	9.9	3.7	1.5	.66	.40	.08	.06
16	.03	14	.66	83	29	8.8	3.5	1.5	.66	.40	.08	.06
17	.10	4.8	.78	30	21	8.2	3.5	1.5	.66	.40	.08	.06
18	.01	2.5	.78	59	17	7.6	3.2	1.3	.56	.48	.08	.06
19	.01	1.6	1.2	30	14	14	3.2	1.3	.56	.48	.08	.06
20	0	1.2	.78	15	11	24	3.0	1.5	.56	.48	.06	.06
21	0	.90	.66	10	9.2	23	2.7	1.3	.48	.40	.06	.04
22	0	.78	2.3	7.6	8.2	18	2.7	1.5	.56	.33	.06	.04
23	0	.66	1.6	6.1	7.3	15	2.5	1.3	.56	.33	.06	.04
24	0	.56	1.2	5.3	7.3	13	2.5	1.3	.56	.27	.06	.04
25	0	.48	1.0	5.3	6.4	11	2.5	1.2	.56	.22	.06	.04
26	0	.40	.90	4.8	12	9.9	2.3	1.2	.48	.22	.06	.04
27	0	.40	.78	4.0	61	9.2	2.3	1.0	.48	.18	.06	.03
28	0	.40	.78	3.7	48	8.5	2.1	.90	.56	.22	.06	.03
29	0	.33	.66	4.2	------	7.9	2.1	1.0	.56	.22	.04	.03
30	0	.33	.56	17	------	8.2	2.3	1.0	.56	.18	.06	.04
31	0	------	.48	8.5	------	11	------	1.0	------	.15	.06	------
TOTAL	.15	114.85	45.79	417.84	847.0	469.2	113.4	45.60	19.56	10.94	2.62	1.43
MEAN	.005	3.83	1.48	13.5	30.3	15.1	3.78	1.47	.65	.35	.085	.048
MAX	.10	49	11	83	124	26	7.6	2.1	1.0	.56	.12	.06
MIN	0	0	.33	.48	5.5	7.6	2.1	.90	.48	.15	.04	.03
AC-FT	.3	228	91	829	1,680	931	225	90	39	22	5.2	2.8

CAL YR 1972 TOTAL 277.66 MEAN .76 MAX 49 MIN 0 AC-FT 551
WTR YR 1973 TOTAL 2,088.38 MEAN 5.72 MAX 124 MIN 0 AC-FT 4,140

PEAK DISCHARGE (BASE, 150 CFS)

DATE	TIME	G.H.	DISCHARGE	DATE	TIME	G.H.	DISCHARGE
11-14	1745	5.09	209	2-13	0530	5.70	308
1-16	1200	5.86	338	2-27	1600	5.67	303

11154200 UVAS CREEK NEAR GILROY, CALIF.

LOCATION.--Lat 36°59'32", long 121°34'21", in Las Animas Grant, Santa Clara County, on left bank 400 ft upstream from county road bridge, 0.4 mile southwest of Gilroy, and 3.9 miles downstream from Bodfish Creek.

DRAINAGE AREA.--71.2 sq mi.

PERIOD OF RECORD.--January 1959 to current year.

GAGE.--Water-stage recorder. Altitude of gage is 190 ft (from topographic map).

AVERAGE DISCHARGE.--14 years, 37.3 cfs (27,020 acre-ft per year).

EXTREMES.--Current year: Maximum discharge, 1,770 cfs Jan. 16 (gage height, 8.24 ft); no flow many days.
Period of record: Maximum discharge, 9,490 cfs Feb. 1, 1963 (gage height, 17.66 ft), from rating curve extended above 3,300 cfs; no flow many days in each year.

REMARKS.--Records fair. Flow regulated by Uvas Reservoir 10 miles upstream (see sta 11154020). Diversion above station for irrigation.

DISCHARGE, IN CUBIC FEET PER SECOND, WATER YEAR OCTOBER 1972 TO SEPTEMBER 1973

DAY	OCT	NOV	DEC	JAN	FEB	MAR	APR	MAY	JUN	JUL	AUG	SEP
1		0	.03	1.6	118	408	54	5.5	1.4	.09	0	2.5
2		0	2.1	1.5	97	297	49	5.5	1.4	0	0	1.8
3		0	4.8	1.3	107	252	46	5.1	1.2	0	0	2.0
4		0	7.0	.87	120	254	40	4.9	1.1	0	0	1.9
5		0	4.3	.27	100	228	38	5.1	1.4	0	0	1.6
6		0	49	.15	500	291	37	4.6	1.3	0	0	.32
7		0	42	.16	1,200	291	35	4.5	.95	0	.16	0
8		0	27	2.0	700	309	33	4.3	1.1	0	.29	0
9		0	18	373	500	246	32	3.8	1.2	0	.63	.16
10		0	15	222	1,000	213	31	3.4	1.5	0	1.9	1.5
11		0	13	89	700	213	28	3.1	1.6	0	1.5	1.5
12		0	11	69	550	179	27	3.3	1.7	0	1.5	1.7
13		0	7.6	54	600	158	28	3.5	1.6	0	1.7	2.3
14		0	5.4	42	900	142	26	3.8	1.4	0	1.5	1.9
15		5.7	4.3	31	800	129	21	3.1	1.5	0	1.5	1.8
16		39	3.7	561	566	118	19	2.0	1.2	0	1.9	2.0
17		5.2	3.4	377	419	111	16	1.5	.80	0	2.9	2.0
18		.14	2.9	466	329	102	16	1.3	.93	0	3.8	2.0
19		0	2.4	323	273	104	15	.93	.63	0	5.5	1.9
20		0	2.5	194	230	232	14	.29	.63	0	5.1	1.7
21		0	2.3	145	202	169	13	0	.58	0	4.0	1.1
22		0	2.8	111	177	146	12	0	0	0	3.0	1.0
23		0	4.6	87	159	124	12	0	.49	0	2.6	1.2
24		0	4.1	71	160	118	11	0	1.0	0	3.4	1.2
25		0	3.3	68	151	112	9.9	.25	.80	0	3.3	1.2
26		0	3.0	69	202	105	8.4	.58	.49	0	4.6	1.1
27		0	3.2	62	633	102	7.6	.41	.54	0	3.8	.93
28		0	3.1	71	800	98	7.0	.29	.49	0	2.8	.80
29		0	1.9	112	------	92	6.5	.22	.68	0	2.2	.63
30		0	1.6	234	------	65	6.1	.22	.87	0	2.2	.80
31		------	1.6	158	------	64	------	1.0	------	0	2.5	------
TOTAL	0	50.04	256.93	3,996.85	12,293	5,472	698.5	72.49	30.48	.09	64.28	40.54
MEAN	0	1.67	8.29	129	439	177	23.3	2.34	1.02	.003	2.07	1.35
MAX	0	39	49	561	1,200	408	54	5.5	1.7	.09	5.5	2.5
MIN	0	0	.03	.15	97	64	6.1	0	0	0	0	0
AC-FT	0	99	510	7,930	24,380	10,850	1,390	144	60	.2	127	80

CAL YR 1972 TOTAL 745.74 MEAN 2.04 MAX 77 MIN 0 AC-FT 1,480
WTR YR 1973 TOTAL 22,975.20 MEAN 62.9 MAX 1,200 MIN 0 AC-FT 45,570

11156500 SAN BENITO RIVER NEAR WILLOW CREEK SCHOOL, CALIF.

LOCATION.--Lat 36°36'34", long 121°12'07", in SE¼SE¼ sec.21, T.15 S., R.7 E., San Benito County, on left bank 0.9 mile northwest of Willow Creek School, 1.3 miles downstream from Willow Creek, and 10 miles northwest of San Benito.

DRAINAGE AREA.--249 sq mi.

PERIOD OF RECORD.--October 1939 to current year. Monthly discharge only for some periods, published in WSP 1315-B.

GAGE.- Water-stage recorder. Datum of gage is 925.52 ft above mean sea level, unadjusted. Prior to Jan. 28, 1948, and Nov. 11, 1955, to Sept. 30, 1965, at site 0.9 mile downstream at different datum. Jan. 28, 1948, to Nov. 10, 1955, and Oct. 1, 1965, to Oct. 22, 1970, at present site at datum 2.37 ft higher.

AVERAGE DISCHARGE.--34 years, 24.1 cfs (17,460 acre-ft per year).

EXTREMES.--Current year: Maximum discharge, 1,820 cfs Feb. 11 (gage height, 8.35 ft), from rating curve extended above 96 cfs on basis of slope-area measurement at gage height 12.94 ft, present datum; minimum daily, 0.08 cfs Nov. 8, 9.

Period of record: Maximum discharge, 8,210 cfs Apr. 3, 1958 (gage height, 8.35 ft, site and datum then in use), from rating curve extended above 600 cfs on basis of slope-area measurement of maximum flow; no flow at times.

Flood of February 1938, reached a stage of about 9.0 ft (former datum) from floodmarks.

REMARKS.--Records fair. Flow regulated by Hernandez Reservoir 40 miles upstream beginning in December 1961 (capacity, 18,700 acre-ft). Small diversion above station for irrigation.

REVISIONS (WATER YEARS).--WSP 1565: 1948(M), 1949.

DISCHARGE, IN CUBIC FEET PER SECOND, WATER YEAR OCTOBER 1972 TO SEPTEMBER 1973

DAY	OCT	NOV	DEC	JAN	FEB	MAR	APR	MAY	JUN	JUL	AUG	SEP
1	.12	.12	.42	.74	14	104	82	23	5.7	55	70	36
2	.12	.12	.42	.74	13	82	74	23	4.5	55	71	36
3	.10	.12	.37	.96	13	89	68	21	3.6	55	73	36
4	.12	1.1	.84	1.1	13	228	65	19	36	53	71	34
5	.10	.12	1.2	.85	13	233	63	19	82	53	73	36
6	.10	.10	1.8	.75	19	228	60	20	68	55	76	34
7	.10	.09	3.8	.74	57	311	58	18	47	57	73	35
8	.10	.08	3.0	5.5	50	296	57	17	49	58	71	36
9	.12	.08	1.6	14	32	253	56	17	51	55	73	36
10	.12	.09	1.1	18	122	216	52	16	53	53	71	36
11	.10	2.0	.96	16	790	245	50	17	55	55	71	36
12	.10	1.6	.74	11	338	200	47	16	55	55	71	36
13	.10	1.2	.74	9.1	379	171	47	16	54	55	71	36
14	.12	36	.55	8.1	190	146	49	16	56	55	71	36
15	.12	47	.55	7.4	140	127	46	16	55	55	70	38
16	.14	45	.55	25	95	109	44	15	53	58	68	40
17	.12	32	1.6	65	106	99	43	15	52	77	68	42
18	.10	17	2.2	48	97	92	42	14	52	81	70	42
19	.10	7.5	1.1	56	82	102	40	13	52	84	63	42
20	.12	4.7	.84	47	70	506	40	13	53	87	49	42
21	.12	3.4	.74	34	63	379	38	13	53	87	45	42
22	.12	2.6	.84	29	57	302	35	13	45	89	45	42
23	.12	2.2	.84	24	55	228	34	12	34	81	49	42
24	.12	1.6	.74	19	58	182	33	12	33	56	50	42
25	.12	1.3	.74	17	52	156	30	11	31	51	36	42
26	.12	.96	.84	16	47	144	28	11	31	50	37	40
27	.14	.74	.84	16	152	131	27	10	32	50	39	32
28	.14	.48	.96	14	372	115	25	9.0	50	51	38	18
29	.12	.42	.96	13	------	100	24	7.0	52	50	36	15
30	.12	.42	.74	13	------	92	24	6.1	55	49	36	13
31	.12	------	.74	14	------	89	------	6.1	------	58	36	------
TOTAL	3.58	210.14	33.36	544.98	3,489	5,755	1,381	454.2	1,352.8	1,883	1,841	1,073
MEAN	.12	7.00	1.08	17.6	125	186	46.0	14.7	45.1	60.7	59.4	35.8
MAX	.14	47	3.8	65	790	506	82	23	82	89	76	42
MIN	.10	.08	.37	.74	13	82	24	6.1	3.6	49	36	13
AC-FT	7.1	417	66	1,080	6,920	11,420	2,740	901	2,680	3,730	3,650	2,130

CAL YR 1972 TOTAL 1,353.10 MEAN 3.70 MAX 58 MIN .05 AC-FT 2,680
WTR YR 1973 TOTAL 18,021.06 MEAN 49.4 MAX 790 MIN .08 AC-FT 35,740

NOTE.--No gage-height record Aug. 25 to Sept. 24.

11157500 TRES PINOS CREEK NEAR TRES PINOS, CALIF.

LOCATION.--Lat 36°45'13", long 121°17'03", in Santa Ana y Quien Sabe Grant, San Benito County, on right bank 3.5 miles southeast of Tres Pinos, and 6.2 miles upstream from mouth.

DRAINAGE AREA.--206 sq mi.

PERIOD OF RECORD.--October 1939 to current year. Yearly estimate only for 1940 and monthly discharge only for some periods, published in WSP 1315-B.

GAGE.--Water-stage recorder. Concrete control since June 3, 1954 (control ineffective since 1955 due to gravel fill). Altitude of gage is 570 ft (from topographic map).

AVERAGE DISCHARGE (unadjusted).--34 years, 13.6 cfs (9,850 acre-ft per year).

EXTREMES.--Current year: Maximum discharge, 6,540 cfs Feb. 11 (gage height, 9.88 ft), from rating curve extended above 140 cfs on basis of slope-area measurement at gage height 9.49 ft; minimum daily, 0.35 cfs Dec. 2-4.
Period of record: Maximum discharge, 8,060 cfs Apr. 4, 1941 (gage height, 7.75 ft), from rating curve extended above 3,500 cfs; maximum gage height, 9.88 ft Feb. 11, 1973; no flow at times in 1952, 1957-61, 1965.
Flood in February 1938 reached a stage of about 9.0 ft, from floodmarks.

REMARKS.--Records fair except those for periods of no gage-height record, which are poor. No regulation; diversions above station for irrigation can divert total flow in summer months, and since 1962, diversions into basin above station from San Benito River for percolation and irrigation.

REVISIONS.--WSP 1715: Drainage area.

DISCHARGE, IN CUBIC FEET PER SECOND, WATER YEAR OCTOBER 1972 TO SEPTEMBER 1973

DAY	OCT	NOV	DEC	JAN	FEB	MAR	APR	MAY	JUN	JUL	AUG	SEP
1	.77	.46	.36	.68	33	49	29	19	10	2.7	2.3	2.5
2	.67	.46	.35	.68	27	12	26	19	9.4	3.0	3.0	2.5
3	.58	.46	.35	.69	20	7.0	24	20	8.2	3.0	3.0	2.5
4	.53	1.2	.35	.65	30	72	22	19	7.0	3.0	3.5	2.3
5	.47	.80	.40	.62	37	65	20	19	5.8	3.0	4.0	2.5
6	.43	.54	.47	.62	63	78	18	19	5.0	3.0	4.2	2.3
7	.44	.62	.55	.62	95	128	17	19	4.2	2.7	4.5	2.3
8	.50	.54	.70	.90	74	110	15	19	3.7	2.7	5.8	2.5
9	.50	.54	.98	.90	53	80	13	20	3.5	2.7	6.2	2.5
10	.54	.80	1.2	53	101	90	13	26	3.5	2.4	6.2	2.5
11	.47	.80	1.2	36	2,430	97	13	28	3.5	2.5	5.4	2.5
12	.65	.80	1.2	13	654	74	12	29	3.5	2.3	5.4	2.5
13	.57	.70	1.2	4.0	1,140	52	12	34	3.5	2.3	5.4	2.5
14	.59	1.2	1.2	2.4	328	40	12	28	3.5	2.0	5.4	2.5
15	.62	1.2	1.2	2.4	306	31	12	11	3.2	2.3	5.4	2.7
16	.70	15	1.2	30	90	24	14	34	3.0	1.8	5.4	2.7
17	.80	9.4	.91	117	36	21	20	58	3.0	1.6	5.4	3.0
18	.62	4.0	.81	129	20	19	22	65	3.0	1.6	5.4	3.0
19	.46	1.0	.90	244	15	20	22	70	3.0	1.8	5.0	3.0
20	.46	.62	.90	109	13	235	22	72	3.0	1.8	4.5	3.0
21	.46	.52	.90	57	12	280	20	72	3.0	1.6	4.0	3.0
22	.46	.49	.94	47	11	300	20	68	3.2	1.6	3.2	3.2
23	.54	.46	.87	32	11	130	20	60	3.5	2.0	3.0	3.2
24	.54	.44	.82	19	10	90	20	51	3.5	2.0	2.5	3.2
25	.54	.42	.75	15	10	68	20	41	3.5	2.0	2.5	3.2
26	.54	.40	.71	39	9.6	62	20	29	3.5	2.0	2.5	3.2
27	.46	.39	.73	42	9.6	54	20	20	3.2	2.0	2.7	3.2
28	.40	.38	.71	32	322	47	19	17	3.0	2.3	2.7	3.2
29	.54	.37	.70	20	------	43	19	14	3.0	2.3	2.5	3.2
30	.46	.36	.70	20	------	38	19	12	3.0	2.3	2.5	3.2
31	.46	------	.70	33	------	33	------	12	------	2.3	2.5	------
TOTAL	16.77	45.37	24.96	1,102.16	5,960.2	2,449.0	555	1,024	124.9	70.6	126.0	83.6
MEAN	.54	1.51	.81	35.6	213	79.0	18.5	33.0	4.16	2.28	4.06	2.79
MAX	.80	15	1.2	244	2,430	300	29	72	10	3.0	6.2	3.2
MIN	.40	.36	.35	.62	9.6	7.0	12	11	3.0	1.6	2.3	2.3
AC-FT	33	90	50	2,190	11,820	4,860	1,100	2,030	248	140	250	166

CAL YR 1972 TOTAL 328.45 MEAN .90 MAX 15 MIN .18 AC-FT 651
WTR YR 1973 TOTAL 11,582.56 MEAN 31.7 MAX 2,430 MIN .35 AC-FT 22,970

PEAK DISCHARGE (BASE, 450 CFS).--Feb. 11 (0445) 6,540 cfs (9.88 ft); Feb. 27 (2200) 710 cfs (6.10 ft).

NOTE.--No gage-height record Oct. 1 to Dec. 8, Mar. 8 to Apr. 9.

11158500 SAN BENITO RIVER NEAR HOLLISTER, CALIF.

LOCATION.--Lat 36°47'17", long 121°22'11", in SW¼ sec.24, T.13 S., R.5 E., San Benito County, on left bank 1,500 ft downstream from Bird Creek, 0.9 mile downstream from Tres Pinos Creek, 2.7 miles west of Tres Pinos, and 4.8 miles southeast of Hollister.

DRAINAGE AREA.--586 sq mi.

PERIOD OF RECORD.--October 1949 to current year.

GAGE.--Water-stage recorder. Altitude of gage is 370 ft (from topographic map).

AVERAGE DISCHARGE.--24 years, 28.5 cfs (20,650 acre-ft per year).

EXTREMES.--Current year: Maximum discharge, 7,400 cfs Feb. 11 (gage height, 14.60 ft); no flow many days.
Period of record: Maximum discharge, 11,600 cfs Apr. 3, 1958 (gage height, 16.30 ft), from rating curve extended above 1,200 cfs on basis of flood-routing study; no flow at times.

REMARKS.--Records good except those for periods of no gage-height record, which are fair. Flow regulated by Hernandez Reservoir 67 miles (revised) upstream beginning in December 1961 (capacity, 18,700 acre-ft). Several small diversions above station for irrigation.

DISCHARGE, IN CUBIC FEET PER SECOND, WATER YEAR OCTOBER 1972 TO SEPTEMBER 1973

DAY	OCT	NOV	DEC	JAN	FEB	MAR	APR	MAY	JUN	JUL	AUG	SEP
1		0	.01	.01	5.6	190	62	14	1.1	32	40	23
2		0	.01	.01	3.4	75	53	18	1.1	33	42	23
3		0	.01	.02	4.6	45	45	20	.90	34	43	23
4		0	.02	.01	6.3	250	39	19	.82	34	44	22
5		0	.02	.01	5.9	225	35	19	.82	33	45	23
6		0	.19	.01	196	188	31	19	1.5	33	47	22
7		0	.25	.01	203	337	28	18	17	35	45	22
8		0	.07	1.3	304	307	25	17	20	27	43	23
9		0	.01	5.2	190	252	23	17	19	23	45	23
10		0	.01	39	356	181	22	19	19	23	44	23
11		0	.01	13	4,150	269	20	19	26	23	43	23
12		0	.01	.62	1,390	225	19	17	29	23	43	23
13		0	.01	.31	2,560	143	19	16	30	22	45	23
14		.19	.01	.31	808	107	21	14	31	20	45	23
15		1.6	.01	.53	714	78	22	5.9	34	20	43	24
16		50	.01	115	262	64	20	5.6	33	14	42	26
17		49	.02	477	100	50	24	12	35	6.2	43	28
18		18	.02	490	40	48	24	12	35	12	43	28
19		8.9	.02	522	26	50	24	13	35	28	36	28
20		1.8	.02	213	7.0	719	23	12	31	32	33	28
21		.25	.02	112	3.5	722	19	12	29	34	29	28
22		.08	.02	31	2.3	845	15	12	28	33	29	29
23		.01	.01	8.9	1.0	363	14	11	25	35	31	29
24		.01	.01	28	.4	235	13	10	17	33	33	28
25		.01	.01	9.8	3.3	185	12	10	13	23	27	29
26		.01	.01	25	.8	169	11	17	12	23	23	21
27		.01	.01	40	70	147	11	14	10	23	25	16
28		.01	.01	4.4	1,050	121	11	13	10	24	25	27
29		.01	.01	5.2	------	107	11	9.6	25	23	23	22
30		.01	.01	51	------	94	11	5.3	30	23	23	19
31		------	.01	8.4	------	78	------	1.6	------	30	23	------
TOTAL	0	129.90	.87	2,201.05	12,463.1	6,869	707	422.0	599.24	811.2	1,145	729
MEAN	0	4.33	.028	71.0	445	222	23.6	13.6	20.0	26.2	36.9	24.3
MAX	0	50	.25	522	4,150	845	62	20	35	35	47	29
MIN	0	0	.01	.01	.40	45	11	1.6	.82	6.2	23	16
AC-FT	0	258	1.7	4,370	24,720	13,620	1,400	837	1,190	1,610	2,270	1,450

CAL YR 1972 TOTAL 288.74 MEAN .79 MAX 50 MIN 0 AC-FT 573
WTR YR 1973 TOTAL 26,077.36 MEAN 71.4 MAX 4,150 MIN 0 AC-FT 51,720

NOTE.--No gage-height record July 25 to Sept. 24.

11158600 SAN BENITO RIVER AT STATE HIGHWAY 156, NEAR HOLLISTER, CALIF.

LOCATION.--Lat 36°51'07", long 121°25'44", in San Justo Grant, San Benito County, on right bank at downstream side of bridge on State Highway 156, and 1.6 miles west of Hollister.

DRAINAGE AREA.--607 sq mi.

PERIOD OF RECORD.--October 1970 to current year.

GAGE.--Water-stage recorder. Altitude of gage is 260 ft (from topographic map).

EXTREMES.--Current year: Maximum discharge, 8,030 cfs Feb. 11 (gage height, 9.18 ft), from rating curve extended above 2,400 cfs; no flow many days.
Period of record: Maximum discharge, 8,030 cfs Feb. 11, 1973 (gage height, 9.18 ft), from rating curve extended above 2,400 cfs; no flow many days in each year.

REMARKS.--Records fair. Flow regulated by Hernandez Reservoir 73 miles (revised) upstream (capacity, 18,700 acre-ft). Some small diversions above station for irrigation.

DISCHARGE, IN CUBIC FEET PER SECOND, WATER YEAR OCTOBER 1972 TO SEPTEMBER 1973

DAY	OCT	NOV	DEC	JAN	FEB	MAR	APR	MAY	JUN	JUL	AUG	SEP
1		0	.11	0	15	209	33	2.7	.78	2.0	.70	.39
2		0	0	0	6.8	78	28	3.6	.29	1.0	.70	10
3		0	0	.06	5.9	69	25	8.3	.29	7.7	1.2	25
4		.44	0	.14	6.1	194	20	7.1	1.0	12	2.7	27
5		0	.10	.33	9.8	179	16	8.3	1.6	12	3.6	19
6		0	.19	0	60	134	12	4.5	2.0	12	3.9	30
7		0	.58	0	180	281	11	5.9	1.3	15	3.9	33
8		0	.28	.64	240	257	9.4	5.9	.29	13	5.9	34
9		0	.02	.74	150	215	8.0	3.9	.29	5.3	6.5	35
10		0	0	.40	250	143	7.2	4.9	.29	4.9	4.9	31
11		0	0	8.9	3,070	209	6.3	3.9	.29	5.3	5.9	22
12		0	.17	2.6	1,720	188	3.0	2.7	.29	4.2	6.5	35
13		.11	.21	.04	1,980	112	3.3	2.7	.29	4.5	8.3	38
14		.96	.04	0	1,110	90	3.9	1.5	.29	3.6	4.2	33
15		2.5	.25	0	712	65	4.2	1.0	.29	2.2	2.4	11
16		2.1	.01	.92	234	47	3.9	1.5	.29	3.0	4.2	8.9
17		11	0	253	131	38	7.7	1.2	.29	.78	6.5	8.9
18		12	.01	198	100	39	9.5	1.5	.29	.70	4.5	8.9
19		5.9	.18	352	75	69	10	.29	6.1	3.0	7.7	8.9
20		3.3	.35	114	48	518	11	.29	3.3	14	12	8.3
21		1.7	.45	52	43	607	7.7	.54	3.9	16	7.7	7.7
22		.62	.12	42	38	670	1.3	.78	4.5	16	5.3	8.9
23		.01	0	30	3.0	323	2.0	1.0	4.5	15	4.9	9.5
24		0	0	19	1.4	191	2.7	1.8	1.3	15	5.3	8.9
25		0	0	19	1.3	137	1.8	.70	.70	10	5.3	9.5
26		0	0	19	1.8	100	1.8	.29	.70	1.3	4.9	7.1
27		0	.06	14	2.0	87	1.6	.34	.70	.70	4.2	1.0
28		.04	.15	12	836	70	1.5	.34	.70	.70	5.3	2.2
29		.21	.37	12	------	59	.46	.62	.70	.70	3.9	5.9
30		.10	0	20	------	47	1.8	1.0	1.5	.70	8.9	2.4
31		------	0	18	------	40	------	.89	------	.70	8.3	------
TOTAL	0	40.99	3.65	1,188.77	11,030.1	5,465	255.06	79.98	39.05	202.98	160.20	490.39
MEAN	0	1.37	.12	38.3	394	176	8.50	2.58	1.30	6.55	5.17	16.3
MAX	0	12	.58	352	3,070	670	33	8.3	6.1	16	12	38
MIN	0	0	0	0	1.3	38	.46	.29	.29	.70	.70	.39
AC-FT	0	81	7.2	2,360	21,880	10,840	506	159	77	403	318	973

CAL YR 1972 TOTAL 114.24 MEAN .31 MAX 12 MIN 0 AC-FT 227
WTR YR 1973 TOTAL 18,956.17 MEAN 51.9 MAX 3,070 MIN 0 AC-FT 37,600

11158900 PESCADERO CREEK NEAR CHITTENDEN, CALIF.

LOCATION.--Lat 36°54'28", long 121°35'04", on west boundary of Juristac Grant, Santa Clara County, on left bank 0.2 mile downstream from small left-bank tributary, 0.6 mile upstream from mouth, and 1.2 miles northwest of Chittenden.

DRAINAGE AREA.--10.2 sq mi.

PERIOD OF RECORD.--October 1970 to current year.

GAGE.--Water-stage recorder and rain gage. Datum of gage is 124.13 ft above mean sea level.

EXTREMES.--Current year: Maximum discharge, 326 cfs Nov. 14 (gage height, 7.08 ft), from rating curve extended above 150 cfs; no flow many days.
Period of record: Maximum discharge, 326 cfs Nov. 14, 1972 (gage height, 7.08 ft), from rating curve extended above 150 cfs; no flow at times.

REMARKS.--Records good. No regulation or diversion above station.

DISCHARGE, IN CUBIC FEET PER SECOND, WATER YEAR OCTOBER 1972 TO SEPTEMBER 1973

DAY	OCT	NOV	DEC	JAN	FEB	MAR	APR	MAY	JUN	JUL	AUG	SEP
1		0	1.3	.38	7.2	25	5.5	1.6	1.6	.56	.11	.08
2		0	1.6	.36	4.7	22	4.7	2.0	1.6	.48	.13	.06
3		0	2.3	.34	4.0	21	4.7	2.0	1.6	.48	.13	.06
4		0	3.2	.32	4.0	26	4.0	2.0	1.4	.41	.11	.08
5		0	2.8	.31	4.0	25	3.6	2.0	1.4	.41	.13	.09
6		0	5.8	.31	66	27	3.2	1.6	1.2	.48	.15	.08
7		0	1.4	.35	36	25	3.2	1.6	1.2	.48	.13	.06
8		0	1.4	.90	20	30	2.8	1.4	1.2	.41	.13	.05
9		0	.62	57	13	25	3.2	1.4	1.0	.34	.11	.04
10		.01	.56	30	65	28	3.6	1.4	1.0	.34	.09	.05
11		.01	.48	9.0	94	29	3.6	1.4	1.0	.34	.11	.05
12		.01	.41	5.5	76	25	3.6	1.6	1.0	.41	.11	.04
13		.02	.41	2.8	127	24	3.6	1.6	1.0	.34	.09	.05
14		66	.34	2.3	76	19	3.2	2.0	.90	.34	.08	.06
15		68	.34	1.6	52	15	2.8	2.0	.80	.34	.08	.06
16		30	.34	80	38	12	2.8	1.6	.80	.34	.07	.07
17		7.8	.48	43	31	9.0	3.2	1.6	.80	.34	.07	.07
18		4.0	.41	77	26	7.2	2.8	1.6	.70	.34	.08	.06
19		4.0	.56	45	25	13	2.5	1.4	.70	.34	.07	.06
20		3.6	.48	28	22	29	2.5	1.4	.62	.34	.06	.07
21		2.9	.48	22	18	27	2.3	1.4	.62	.27	.05	.07
22		2.5	1.0	15	14	25	2.3	1.4	.62	.22	.06	.06
23		2.1	.90	10	12	24	2.5	1.2	.62	.20	.06	.07
24		1.9	.70	7.2	8.0	20	2.5	1.4	.62	.20	.06	.07
25		1.7	.62	6.4	5.5	17	2.3	1.6	.56	.18	.06	.07
26		1.5	.56	4.0	12	14	2.3	1.4	.56	.15	.07	.05
27		1.4	.51	2.8	30	10	2.3	1.4	.56	.15	.07	.03
28		1.3	.48	2.5	34	7.2	2.3	1.6	.56	.18	.06	.03
29		1.3	.46	3.6	------	6.4	2.3	1.6	.56	.18	.05	.03
30		1.3	.43	30	------	5.5	2.3	2.0	.48	.18	.06	.05
31		------	.40	12	------	6.4	------	2.0	------	.15	.07	------
TOTAL	0	201.35	31.77	499.97	924.4	598.7	92.5	50.2	27.28	9.92	2.71	1.77
MEAN	0	6.71	1.02	16.1	33.0	19.3	3.08	1.62	.91	.32	.087	.059
MAX	0	68	5.8	80	127	30	5.5	2.0	1.6	.56	.15	.09
MIN	0	0	.34	.31	4.0	5.5	2.3	1.2	.48	.15	.05	.03
AC-FT	0	399	63	992	1,830	1,190	183	100	54	20	5.4	3.5
(a)	1.69	6.87	1.51	5.96	2.57	2.14	.21	.01	0	0	0	0

CAL YR 1972 TOTAL 378.89 MEAN 1.04 MAX 68 MIN 0 AC-FT 752
WTR YR 1973 TOTAL 2,440.57 MEAN 6.69 MAX 127 MIN 0 AC-FT 4,840

PEAK DISCHARGE (BASE, 70 CFS, REVISED)

DATE	TIME	G.H.	DISCHARGE	DATE	TIME	G.H.	DISCHARGE
11-14	1915	7.08	326	2-6	2045	4.40	72
1-9	1715	4.99	131	2-10	0245	5.49	181
1-16	1300	6.15	247	2-13	0545	6.49	279
1-30	0445	4.38	70				

a Precipitation, in inches.

11159000 PAJARO RIVER AT CHITTENDEN, CALIF.

LOCATION.--Lat 36°54'01", long 121°35'48", in Salsipuedes Grant, Santa Cruz County, on downstream side of right bank pier of bridge on State Highway 129, 0.6 mile downstream from Pescadero Creek, 0.6 mile southeast of Chittenden, and 2.3 miles downstream from San Benito River.

DRAINAGE AREA.--1,186 sq mi.

PERIOD OF RECORD.--October 1939 to current year. Monthly discharge only for some periods, published in WSP 1315-B. Prior to October 1954, published as "near Chittenden."

GAGE.--Water-stage recorder. Datum of gage is 82.28 ft above mean sea level. Prior to May 13, 1949, nonrecording gage on former bridge 100 ft downstream at same datum except that water-stage recorder, also 100 ft downstream and at same datum, was used Dec. 20, 1946, to June 11, 1947, June 21 to Sept. 23, 1947, and Dec. 19, 1947, to May 6, 1948.

AVERAGE DISCHARGE.--34 years, 147 cfs (106,500 acre-ft per year).

EXTREMES.--Current year: Maximum discharge, 8,610 cfs Feb. 11 (gage height, 17.73 ft); minimum daily, 0.94 cfs Nov. 3.

Period of record: Maximum discharge, 24,000 cfs Dec. 24, 1955 (gage height, 32.46 ft), from rating curve extended above 8,300 cfs on basis of slope-conveyance study; maximum gage height, 33.11 ft Apr. 3, 1958; no flow at times in July, August 1948.

Flood in February 1938, reached a stage of 31.3 ft, from floodmarks.

REMARKS.--Records fair. Flow regulated by Hernandez Reservoir (capacity, 18,700 acre-ft), Pacheco Lake (capacity, 6,150 acre-ft), Chesbro Reservoir (see sta 11153480), Uvas Reservoir (see sta 11154020), and San Felipe Lake. Many diversions above station for irrigation. Records of chemical analyses for the current year are published in Part 2 of this report.

DISCHARGE, IN CUBIC FEET PER SECOND, WATER YEAR OCTOBER 1972 TO SEPTEMBER 1973

DAY	OCT	NOV	DEC	JAN	FEB	MAR	APR	MAY	JUN	JUL	AUG	SEP
1	4.4	1.1	5.7	4.6	212	1,550	206	33	20	8.6	6.7	5.5
2	4.6	1.1	5.5	4.6	154	1,060	190	31	19	8.5	7.5	4.8
3	4.4	.94	5.3	4.6	121	815	173	31	18	8.4	7.9	4.2
4	4.0	2.5	5.7	4.8	121	931	153	30	18	8.4	7.1	4.2
5	4.4	3.7	5.6	4.6	125	951	138	29	18	8.2	7.5	4.5
6	3.4	2.5	9.5	4.6	536	891	135	28	18	8.2	7.5	4.2
7	3.2	4.0	26	4.4	3,290	1,230	132	27	18	8.2	7.5	4.2
8	2.5	3.4	36	5.4	1,920	1,210	117	26	17	8.1	6.7	4.8
9	2.7	2.3	24	150	1,120	1,020	109	26	16	8.1	6.3	4.5
10	3.4	1.7	17	1,180	2,360	819	100	25	17	8.1	6.3	4.5
11	3.2	2.3	13	621	6,070	875	87	24	15	8.0	6.3	4.5
12	3.4	4.6	11	424	5,210	839	81	25	15	8.0	7.1	3.9
13	4.4	6.7	9.1	287	6,610	657	78	25	15	7.9	6.7	4.8
14	5.4	7.0	7.5	187	5,450	555	78	25	14	7.1	5.9	5.2
15	5.6	43	6.3	113	4,460	470	77	23	15	7.5	6.7	5.5
16	5.1	716	5.9	927	2,860	408	76	22	15	7.9	5.9	4.5
17	4.4	520	5.8	1,660	2,130	363	69	20	14	7.5	5.2	4.2
18	3.7	205	5.6	1,750	1,420	330	64	20	16	7.5	5.2	4.2
19	3.2	124	5.9	2,290	1,050	337	62	22	15	8.4	5.5	3.9
20	2.3	75	5.8	1,310	806	1,080	58	22	12	8.9	5.5	3.7
21	1.8	42	5.8	884	616	1,270	58	20	9.8	7.9	5.5	3.7
22	1.6	26	6.5	617	485	1,320	55	20	9.2	7.5	4.8	3.7
23	1.3	18	6.9	431	410	887	54	19	9.2	7.9	4.2	3.7
24	1.2	13	6.2	284	370	647	49	20	9.0	7.5	4.8	3.9
25	1.2	11	5.7	197	338	516	47	19	8.8	7.9	5.2	3.7
26	1.2	8.8	5.3	155	372	445	44	20	8.8	7.9	5.2	3.9
27	1.4	7.5	5.3	112	625	393	41	20	8.6	7.1	5.2	4.5
28	1.7	6.8	5.3	87	2,760	339	38	18	8.6	6.7	4.5	3.9
29	1.6	6.5	5.1	74	------	298	38	18	8.6	6.3	4.8	3.9
30	1.3	6.1	4.8	434	------	250	34	18	8.6	6.7	5.2	4.2
31	1.2	------	4.8	351	------	231	------	20	------	6.7	5.9	------
TOTAL	93.2	1,872.54	277.9	14,562.6	52,001	22,987	2,641	726	414.2	241.6	186.3	128.9
MEAN	3.01	62.4	8.96	470	1,857	742	88.0	23.4	13.8	7.79	6.01	4.30
MAX	5.6	716	36	2,290	6,610	1,550	206	33	20	8.9	7.9	5.5
MIN	1.2	.94	4.8	4.4	121	231	34	18	8.6	6.3	4.2	3.7
AC-FT	185	3,710	551	28,880	103,100	45,590	5,240	1,440	822	479	370	256

CAL YR 1972 TOTAL 4,891.93 MEAN 13.4 MAX 716 MIN .46 AC-FT 9,700
WTR YR 1973 TOTAL 96,132.24 MEAN 263 MAX 6,610 MIN .94 AC-FT 190,700

11159200 CORRALITOS CREEK AT FREEDOM, CALIF.

LOCATION.--Lat 36°56'22", long 121°46'10", in Los Corralitos Grant, Santa Cruz County, on right bank just upstream from Green Valley Road bridge, 0.2 mile north of Freedom, and 2.3 miles north of Watsonville.

DRAINAGE AREA.--27.8 sq mi.

PERIOD OF RECORD.--October 1956 to current year.

GAGE.--Water-stage recorder. Altitude of gage is 80 ft (from topographic map).

AVERAGE DISCHARGE.--17 years, 14.1 cfs (10,220 acre-ft per year).

EXTREMES.--Current year: Maximum discharge, 1,930 cfs Jan. 16 (gage height, 10.09 ft); no flow many days. Period of record: Maximum discharge, 2,680 cfs Apr. 2, 1958 (gage height, 12.59 ft); no flow at times. Flood of Dec. 22, 1955, reached a stage of 15.6 ft, from floodmarks (discharge, 3,620 cfs on basis of contracted-opening measurement of maximum flow).

REMARKS.--Records good. No regulation; Watsonville Water Works can divert up to 8.0 cfs daily above station for municipal supply, domestic use, and irrigation.

DISCHARGE, IN CUBIC FEET PER SECOND, WATER YEAR OCTOBER 1972 TO SEPTEMBER 1973

DAY	OCT	NOV	DEC	JAN	FEB	MAR	APR	MAY	JUN	JUL	AUG	SEP
1	0	0	.36	.44	27	103	23	2.8	.26	.45	.15	0
2	0	0	.36	.40	21	81	21	2.2	.26	.45	.22	0
3	0	0	.57	.28	30	75	20	2.0	.31	.38	.22	0
4	0	5.3	6.0	.24	39	72	18	2.0	.26	.31	.22	.01
5	0	.77	2.7	.21	33	64	15	2.5	.26	.31	.22	0
6	0	.02	46	.28	194	98	14	2.0	.26	.31	.31	0
7	0	0	20	.21	772	80	13	1.7	.22	.31	.26	0
8	0	.31	13	11	190	104	12	1.3	.22	.31	.18	.03
9	0	.08	8.8	221	130	76	12	.96	.22	.22	.15	0
10	0	6.1	6.3	86	365	71	11	.52	.26	.26	.15	0
11	0	14	3.9	39	274	71	9.6	.45	.26	.26	.18	0
12	0	3.3	3.1	35	212	59	9.1	.38	.26	.31	.10	0
13	0	42	2.8	28	338	48	10	.45	.31	.31	0	0
14	.07	184	2.3	22	432	43	9.6	.45	.31	.31	0	0
15	0	134	2.1	18	224	38	8.6	.62	.31	.38	0	0
16	.07	88	1.5	569	138	34	8.2	.45	.38	.26	0	0
17	.41	31	2.8	185	107	33	7.8	.45	.45	.26	0	0
18	0	18	3.1	348	84	30	7.0	.38	.38	.26	0	0
19	0	12	4.4	161	69	51	6.6	.38	.38	.38	0	0
20	0	9.4	3.9	89	58	70	6.2	.38	.45	.38	.01	0
21	0	6.8	1.5	63	51	65	5.5	.38	.45	.26	0	.26
22	0	3.3	8.8	48	42	55	4.8	.38	.62	.26	0	.28
23	0	2.7	8.0	38	34	45	4.5	.31	.52	.22	0	.16
24	0	2.3	4.2	30	40	38	4.5	.31	.62	.15	0	.02
25	0	1.5	2.8	26	33	35	4.2	.26	.45	.15	0	0
26	0	1.2	2.3	25	75	34	3.9	.26	.38	.18	0	0
27	0	1.0	1.8	19	220	31	3.6	.22	.52	.22	0	0
28	0	.70	3.6	16	161	28	3.6	.22	.52	.22	0	0
29	0	.44	1.0	15	------	26	3.6	.26	.45	.22	0	0
30	0	.40	.70	59	------	26	3.3	.26	.45	.26	0	0
31	0	------	.64	35	------	32	------	.31	------	.18	0	------
TOTAL	.55	568.62	169.33	2,188.06	4,393	1,716	283.2	25.54	11.00	8.74	2.37	.76
MEAN	.018	19.0	5.46	70.6	157	55.4	9.44	.82	.37	.28	.077	.025
MAX	.41	184	46	569	772	104	23	2.8	.62	.45	.31	.28
MIN	0	0	.36	.21	21	26	3.3	.22	.22	.15	0	0
AC-FT	1.1	1,130	336	4,340	8,710	3,400	562	51	22	17	4.7	1.5

CAL YR 1972 TOTAL 1,001.04 MEAN 2.74 MAX 184 MIN 0 AC-FT 1,990
WTR YR 1973 TOTAL 9,367.17 MEAN 25.7 MAX 772 MIN 0 AC-FT 18,580

PEAK DISCHARGE (BASE, 600 CFS)

DATE	TIME	G.H.	DISCHARGE	DATE	TIME	G.H.	DISCHARGE
1-16	1230	10.09	1,930	2-10	0145	6.08	750
1-18	1400	5.59	628	2-14	1045	6.85	955
2- 7	0330	9.41	1,720				

11159500 PAJARO RIVER AT WATSONVILLE, CALIF.

LOCATION.--Lat 36°54'19", long 121°45'01", in Bolsa del Pajaro Grant, Santa Cruz County, on right bank at downstream side of bridge on State Highway 1 in Watsonville, and 5 miles upstream from mouth.

DRAINAGE AREA.--1,273 sq mi.

PERIOD OF RECORD.--October 1911 to September 1913, October 1971 to September 1973 (discontinued).

GAGE.--Water-stage recorder. Datum of gage is 8.55 ft (revised) above mean sea level. Oct. 11, 1911, to Sept. 30, 1913, nonrecording gage at same site at different datum.

EXTREMES.--Current year: Maximum discharge, 8,860 cfs Feb. 11 (gage height, 13.74 ft); minimum daily, 0.16 cfs Oct. 11.
Period of record: Maximum discharge, 8,860 cfs Feb. 11, 1973 (gage height, 13.74 ft); no flow at times in 1912-13.

REMARKS.--Records fair except those for periods of no gage-height record, which are poor. Flow regulated by Hernandez Reservoir (capacity, 18,700 acre-ft), Pacheco Lake (capacity, 6,150 acre-ft), Chesbro Reservoir (see sta 11153480), Uvas Reservoir (see sta 11154020), and San Felipe Lake. Many diversions above station for irrigation.

DISCHARGE, IN CUBIC FEET PER SECOND, WATER YEAR OCTOBER 1972 TO SEPTEMBER 1973

DAY	OCT	NOV	DEC	JAN	FEB	MAR	APR	MAY	JUN	JUL	AUG	SEP
1	3.3	.60	2.4	9.5	355	1,830	313	45	17	2.4	1.2	1.1
2	3.3	.60	2.0	9.0	283	1,350	295	40	17	1.4	1.2	1.1
3	3.4	.60	3.5	8.5	259	1,100	270	36	19	1.7	1.2	1.0
4	3.4	12	4.9	7.5	276	1,130	240	33	15	1.5	1.2	1.0
5	3.4	.96	3.5	7.0	233	1,230	215	33	12	2.0	1.2	1.0
6	3.4	.96	41	6.0	671	1,140	200	31	12	1.9	1.2	1.0
7	3.4	1.5	11	5.4	3,470	1,470	190	29	12	2.1	1.2	1.0
8	3.4	.96	4.0	17	2,430	1,470	175	27	9.5	2.6	1.2	1.0
9	3.1	1.1	23	207	1,550	1,270	165	26	9.3	1.7	1.2	1.0
10	.22	11	25	1,010	2,980	1,050	155	25	9.6	1.7	1.2	.98
11	.16	14	19	644	6,190	1,060	148	23	10	2.3	1.2	.96
12	.84	4.3	16	418	5,200	1,110	140	22	9.1	2.7	1.2	.95
13	.18	35	15	280	6,570	881	135	22	9.3	2.9	1.2	.93
14	2.0	263	13	183	6,030	752	130	23	8.6	2.5	1.2	.92
15	1.4	605	11	123	5,310	649	122	22	8.2	2.6	1.2	.90
16	2.6	585	10	822	3,780	564	117	21	9.3	2.4	1.2	.88
17	1.5	367	12	2,110	3,270	507	110	19	9.8	1.9	1.2	.87
18	.51	204	10	2,030	2,710	457	105	18	8.3	2.0	1.2	.86
19	.43	130	14	2,570	2,190	486	97	16	6.7	1.5	1.2	.85
20	.78	78	12	1,520	1,800	1,160	91	19	5.1	1.5	1.2	.82
21	.43	47	22	1,070	1,420	1,530	86	19	3.3	1.1	1.2	.78
22	.35	23	35	762	1,090	1,460	83	18	2.8	1.7	1.2	.75
23	.84	14	32	537	867	1,070	78	16	2.9	1.2	1.1	.72
24	.35	8.0	24	349	764	835	76	16	2.8	1.0	1.1	.70
25	.66	5.7	21	251	692	686	72	17	2.3	1.2	1.1	.68
26	.60	4.3	17	200	710	610	66	17	2.0	1.2	1.1	.64
27	.90	3.0	16	157	1,320	557	62	18	2.6	1.2	1.1	.63
28	.66	3.0	14	125	2,810	484	57	13	4.4	1.2	1.1	.62
29	.51	2.7	12	123	------	435	53	11	2.2	1.2	1.1	.60
30	.55	2.8	10	552	------	376	48	10	2.2	1.2	1.1	.59
31	.39	------	10	563	------	353	------	14	------	1.2	1.1	------
TOTAL	46.96	2,429.08	465.3	16,675.9	65,230	29,062	4,094	699	244.3	54.7	36.3	25.83
MEAN	1.51	81.0	15.0	538	2,330	937	136	22.5	8.14	1.76	1.17	.86
MAX	3.4	605	41	2,570	6,570	1,830	313	45	19	2.9	1.2	1.1
MIN	.16	.60	2.0	5.4	233	353	48	10	2.0	1.0	1.1	.59
AC-FT	93	4,820	923	33,080	129,400	57,640	8,120	1,390	485	108	72	51

CAL YR 1972 TOTAL 4,459.70 MEAN 12.2 MAX 605 MIN .05 AC-FT 8,850
WTR YR 1973 TOTAL 119,063.37 MEAN 326 MAX 6,570 MIN .16 AC-FT 236,200

NOTE.--No gage-height record Feb. 28 to May 3, July 26 to Sept. 30.

11159690 APTOS CREEK NEAR APTOS, CALIF.

LOCATION.--Lat 37°00'06", long 121°54'18", in Aptos Grant, Santa Cruz County, on right bank at downstream side of county road bridge, 0.4 mile downstream from small right-bank tributary, and 1.7 miles north of Aptos.

DRAINAGE AREA.--10.2 sq mi.

PERIOD OF RECORD.--October 1971 to current year.

GAGE.--Water-stage recorder. Altitude of gage is 160 ft (from topographic map).

EXTREMES.--Current year: Maximum discharge, 1,200 cfs Jan. 16 (gage height, 5.65 ft), from rating curve extended above 340 cfs; minimum daily, 0.45 cfs Oct. 8.
Period of record: Maximum discharge, 1,200 cfs Jan. 16, 1973 (gage height, 5.65 ft), from rating curve extended above 340 cfs; minimum daily, 0.36 cfs July 30 to Aug. 2, 1972.

REMARKS.--Records fair. No regulation or diversion above station.

DISCHARGE, IN CUBIC FEET PER SECOND, WATER YEAR OCTOBER 1972 TO SEPTEMBER 1973

DAY	OCT	NOV	DEC	JAN	FEB	MAR	APR	MAY	JUN	JUL	AUG	SEP
1	.62	.68	1.9	.88	20	43	10	5.8	2.7	1.7	1.1	1.2
2	.62	.68	1.8	.80	17	33	9.8	5.3	2.7	1.7	1.1	1.1
3	.62	.96	2.1	.81	30	30	9.3	4.9	2.7	1.6	1.1	1.1
4	.62	7.0	2.3	.81	46	28	8.9	4.9	2.7	1.5	1.1	1.1
5	.62	3.0	1.3	.81	30	23	8.5	4.9	2.7	1.5	1.1	1.2
6	.62	2.2	15	.79	285	57	8.6	4.9	2.5	1.5	1.2	1.2
7	.51	3.9	5.5	.75	349	42	8.5	4.4	2.5	1.5	1.2	1.1
8	.45	3.2	3.2	2.2	139	47	8.2	4.4	2.4	1.5	1.2	.96
9	.58	2.5	2.3	75	124	34	7.9	4.2	2.1	1.5	1.2	.96
10	4.1	18	1.9	29	248	29	7.8	4.2	2.1	1.5	1.2	.96
11	1.5	24	1.7	11	177	26	7.5	4.2	2.1	1.4	1.2	1.0
12	1.7	7.6	1.5	10	121	23	7.3	4.0	2.1	1.4	1.2	1.0
13	2.0	73	1.4	7.9	177	20	7.4	4.0	2.1	1.4	1.2	1.0
14	3.2	110	1.2	5.8	305	19	7.5	4.0	2.1	1.4	1.1	1.0
15	4.2	101	1.2	5.1	114	17	7.3	3.8	2.1	1.4	1.1	1.0
16	4.8	44	1.2	250	69	16	7.0	3.8	2.1	1.4	1.1	1.0
17	6.1	9.8	1.2	56	50	15	6.9	3.6	2.1	1.4	1.1	1.0
18	2.4	5.6	1.2	223	39	14	6.7	3.4	2.0	1.4	1.1	1.1
19	1.7	3.3	1.6	77	32	17	6.4	3.4	1.9	1.5	1.1	1.1
20	1.6	2.6	1.2	35	25	19	6.3	3.4	1.9	1.5	1.2	1.1
21	1.4	2.4	1.2	23	22	20	6.4	3.4	1.7	1.5	1.2	1.1
22	1.2	2.2	1.6	17	20	19	6.4	3.4	1.7	1.5	1.2	1.2
23	1.1	2.1	1.4	13	18	17	6.4	3.4	1.7	1.3	1.2	1.2
24	1.1	1.9	1.3	11	19	15	6.1	3.2	1.7	1.3	1.2	1.2
25	.96	1.7	1.2	10	16	14	6.1	3.2	1.7	1.2	1.2	1.2
26	.82	1.7	1.1	8.9	34	14	5.9	3.0	1.7	1.2	1.2	1.1
27	.81	1.8	1.1	7.9	104	13	5.8	3.0	1.7	1.1	1.2	1.0
28	.81	1.7	1.0	7.6	77	12	5.8	2.9	1.7	1.2	1.2	1.0
29	.81	1.5	.96	9.7	------	11	6.1	2.9	1.7	1.2	1.2	1.0
30	.76	1.6	.89	57	------	12	6.1	2.9	1.7	1.2	1.2	1.0
31	.68	------	.89	22	------	12	------	3.1	------	1.1	1.2	------
TOTAL	49.01	441.62	63.34	979.75	2,707	711	218.9	119.9	62.6	43.5	36.1	32.18
MEAN	1.58	14.7	2.04	31.6	96.7	22.9	7.30	3.87	2.09	1.40	1.16	1.07
MAX	6.1	110	15	250	349	57	10	5.8	2.7	1.7	1.2	1.2
MIN	.45	.68	.89	.75	16	11	5.8	2.9	1.7	1.1	1.1	.96
AC-FT	97	876	126	1,940	5,370	1,410	434	238	124	86	72	64

CAL YR 1972 TOTAL 992.38 MEAN 2.71 MAX 110 MIN .36 AC-FT 1,970
WTR YR 1973 TOTAL 5,464.90 MEAN 15.0 MAX 349 MIN .45 AC-FT 10,840

PEAK DISCHARGE (BASE, 100 CFS)

DATE	TIME	G.H.	DISCHARGE	DATE	TIME	G.H.	DISCHARGE
11-13	unknown	2.98	307	1-18	1400	4.06	613
11-15	1900	3.05	325	2-6	unknown	5.25	1,040
1-9	1700	2.50	198	2-14	unknown	4.76	854
1-16	1030	5.65	1,200				

11160000 SOQUEL CREEK AT SOQUEL, CALIF.

LOCATION.--Lat 36°59'29", long 121°57'17", in NE¼ sec.10, T.11 S., R.1 W., Santa Cruz County, on left bank 0.2 mile upstream from highway bridge in town of Soquel, and 0.4 mile downstream from Bates Creek.

DRAINAGE AREA.--40.2 sq mi.

PERIOD OF RECORD.--May 1951 to current year.

GAGE.--Water-stage recorder. Datum of gage is 21.38 ft above mean sea level.

AVERAGE DISCHARGE.--22 years, 43.8 cfs (31,730 acre-ft per year).

EXTREMES.--Current year: Maximum discharge, 4,530 cfs Jan. 16 (gage height, 12.55 ft); minimum daily, 0.56 cfs Oct. 2.
Period of record: Maximum discharge, 15,800 cfs Dec. 23, 1955 (gage height, 22.33 ft), from rating curve extended above 2,900 cfs on basis of slope-area measurement of maximum flow; minimum daily, 0.10 cfs Aug. 12, 19, 1964.

REMARKS.--Records fair. No regulation; small diversion above station for irrigation. Records of water temperatures for the current year are published in Part 2 of this report.

DISCHARGE, IN CUBIC FEET PER SECOND, WATER YEAR OCTOBER 1972 TO SEPTEMBER 1973

DAY	OCT	NOV	DEC	JAN	FEB	MAR	APR	MAY	JUN	JUL	AUG	SEP
1	.65	1.9	9.6	7.2	97	207	58	21	12	5.9	2.8	1.4
2	.56	2.1	9.1	6.9	86	170	50	20	12	5.9	2.7	1.3
3	.61	2.8	16	7.3	243	185	46	19	11	5.7	2.7	1.4
4	.71	28	21	7.5	265	172	43	18	11	5.3	2.9	1.6
5	.86	11	12	7.6	168	144	40	20	11	4.9	2.8	1.7
6	1.0	6.9	48	7.3	850	404	38	21	11	4.7	2.9	1.5
7	1.1	9.6	23	7.7	828	269	37	20	10	4.6	2.8	1.4
8	1.1	8.3	15	64	359	302	35	19	10	4.7	2.7	1.2
9	1.2	6.6	9.9	626	359	228	34	20	10	4.6	2.6	1.3
10	2.1	33	7.7	284	815	202	33	18	10	4.2	2.6	1.6
11	2.1	84	6.6	138	570	192	31	17	9.0	4.1	2.5	1.6
12	2.3	22	5.6	150	416	168	31	16	9.0	4.3	2.5	1.6
13	3.0	296	5.5	104	570	152	32	17	9.0	4.5	2.4	1.7
14	8.3	633	5.1	77	781	142	30	16	9.0	4.9	2.3	1.6
15	23	530	4.7	65	335	132	29	17	8.0	5.1	2.1	1.8
16	14	321	4.7	1,380	250	126	29	16	8.0	5.2	2.1	1.9
17	17	94	6.2	462	202	123	28	15	8.0	5.0	2.1	1.8
18	8.3	52	5.8	824	180	117	27	15	8.0	5.3	1.9	1.8
19	5.9	37	11	395	161	170	26	15	7.0	5.3	1.9	1.8
20	4.0	30	8.0	244	148	184	25	15	7.0	4.8	1.9	1.9
21	3.2	24	7.2	199	136	166	24	15	7.0	4.0	1.7	1.7
22	3.0	20	11	155	123	136	24	14	6.5	4.2	1.6	1.8
23	2.7	17	10	130	114	112	23	14	6.7	3.8	1.4	2.1
24	2.3	15	8.8	115	144	104	23	14	6.4	3.5	1.4	2.2
25	2.1	14	8.0	114	108	99	22	14	6.2	3.2	1.4	2.0
26	2.1	13	7.7	99	344	91	22	13	5.8	3.1	1.4	1.7
27	2.1	12	7.7	89	512	81	21	13	5.7	2.7	1.5	1.4
28	2.1	11	7.5	80	350	74	21	13	6.2	3.1	1.3	1.3
29	1.9	10	7.2	181	------	65	21	13	5.9	3.0	1.4	1.5
30	1.7	10	7.1	351	------	64	21	12	5.8	2.8	1.4	1.7
31	1.7	------	7.1	117	------	65	------	12	------	2.8	1.3	------
TOTAL	122.69	2,355.2	323.8	6,494.5	9,514	4,846	924	502	252.2	135.2	65.0	49.3
MEAN	3.96	78.5	10.4	210	340	156	30.8	16.2	8.41	4.36	2.10	1.64
MAX	23	633	48	1,380	850	404	58	21	12	5.9	2.9	2.2
MIN	.56	1.9	4.7	6.9	86	64	21	12	5.7	2.7	1.3	1.2
AC-FT	243	4,670	642	12,880	18,870	9,610	1,830	996	500	268	129	98

CAL YR 1972 TOTAL 4,823.74 MEAN 13.2 MAX 633 MIN .11 AC-FT 9,570
WTR YR 1973 TOTAL 25,583.89 MEAN 70.1 MAX 1,380 MIN .56 AC-FT 50,750

PEAK DISCHARGE (BASE, 1,000 CFS)

DATE	TIME	G.H.	DISCHARGE	DATE	TIME	G.H.	DISCHARGE
11-13	2015	6.72	1,170	2-6	2245	8.32	1,840
1-9	1815	6.66	1,140	2-10	0045	8.19	1,790
1-16	1115	12.55	4,530	2-14	0900	7.95	1,680

NOTE.--No gage-height record May 18 to June 21.

11160020 SAN LORENZO RIVER NEAR BOULDER CREEK, CALIF.

LOCATION.--Lat 37°12'24", long 122°08'38", in NE¼SW¼ sec.25, T.8 S., R.3 W., Santa Cruz County, on right bank 22 ft upstream from culvert on State Highway 9, 100 ft upstream from small right-bank tributary, and 5.8 miles north of town of Boulder Creek.

DRAINAGE AREA.--6.17 sq mi.

PERIOD OF RECORD.--July 1968 to current year.

GAGE.--Water-stage recorder. Concrete control since Sept. 1, 1971. Altitude of gage is 710 ft (from topographic map).

AVERAGE DISCHARGE.--5 years, 7.64 cfs (5,540 acre-ft per year).

EXTREMES.--Current year: Maximum discharge, 672 cfs Jan. 16 (gage height, 9.10 ft), from rating curve extended as explained below; minimum daily, 0.32 cfs Oct. 7.
Period of record: Maximum discharge, 672 cfs Jan. 16, 1973 (gage height, 9.10 ft), from rating curve extended above 230 cfs on basis of computation of flow through culvert at gage height 8.48 ft; minimum daily, 0.18 cfs Sept. 1, 1972.

REMARKS.--Records good. No regulation or diversion above station. Records of chemical analyses for the current year are published in Part 2 of this report.

REVISIONS (WATER YEARS).--WRD Calif. 1970: 1969(M).

DISCHARGE, IN CUBIC FEET PER SECOND, WATER YEAR OCTOBER 1972 TO SEPTEMBER 1973

DAY	OCT	NOV	DEC	JAN	FEB	MAR	APR	MAY	JUN	JUL	AUG	SEP
1	.50	.56	1.8	1.8	16	62	16	5.5	3.8	1.7	1.2	.99
2	.50	.48	1.8	1.8	14	44	16	5.5	3.5	1.6	1.2	.96
3	.50	.63	1.8	1.8	22	42	15	5.5	3.5	1.5	1.3	.93
4	.50	6.4	2.6	1.8	37	41	14	5.5	3.2	1.5	1.2	.91
5	.48	1.2	1.8	1.8	33	36	13	5.5	3.0	1.5	1.2	.95
6	.42	.71	4.5	1.8	181	39	13	5.5	3.0	1.5	1.3	.93
7	.32	1.1	4.0	1.8	111	34	12	5.5	3.0	1.5	1.3	.85
8	.33	.80	3.2	7.4	54	33	11	5.1	3.0	1.4	1.1	.82
9	.74	.70	2.6	52	61	31	11	4.7	2.7	1.4	1.1	.81
10	1.2	6.9	2.3	25	123	29	11	4.7	3.0	1.4	1.1	.82
11	6.2	13	2.0	17	124	29	10	4.4	3.0	1.4	1.1	.85
12	2.7	4.0	2.0	18	80	29	10	4.4	3.0	1.4	1.1	.91
13	1.9	33	2.0	14	100	27	10	4.4	3.2	1.4	1.0	.91
14	2.6	51	1.8	11	80	25	11	4.7	3.5	1.3	.98	.89
15	6.6	61	1.8	11	58	24	10	4.7	3.0	1.2	.90	.89
16	5.1	34	1.8	227	46	23	9.9	4.4	2.7	1.2	.90	.78
17	5.7	16	2.0	49	39	22	9.4	4.4	2.5	1.2	.92	.79
18	2.9	11	2.0	250	34	21	9.4	4.4	2.3	1.2	.95	.79
19	1.9	8.1	2.6	88	32	24	9.4	4.4	2.3	1.2	.92	.77
20	1.7	6.4	2.6	50	28	25	8.4	4.4	2.1	1.3	.91	.85
21	1.3	5.4	2.3	39	26	27	7.8	4.4	2.0	1.4	.92	.83
22	1.3	4.9	2.9	33	24	25	7.3	4.4	1.9	1.4	.99	.80
23	1.3	3.6	2.6	26	22	24	7.3	4.4	1.9	1.2	1.0	.90
24	1.0	2.6	2.6	22	28	21	7.3	4.4	1.9	1.4	.94	.82
25	.90	2.3	2.3	21	22	21	6.3	4.4	1.9	1.4	.92	.82
26	.90	2.0	2.3	18	44	21	6.3	4.1	1.9	1.3	.95	.74
27	.70	2.0	2.3	16	158	19	6.3	3.8	1.9	1.3	.95	.70
28	.70	2.0	2.3	15	141	18	5.9	3.5	1.9	1.3	.92	.68
29	.70	2.0	2.0	21	------	18	6.3	3.5	1.9	1.2	.85	.65
30	.70	1.8	2.0	27	------	18	5.5	3.5	2.0	1.2	.85	.70
31	.56	------	1.8	19	------	18	------	3.5	------	1.3	.89	------
TOTAL	52.85	285.58	72.4	1,089.0	1,738	870	295.8	141.5	78.5	42.2	31.86	25.04
MEAN	1.70	9.52	2.34	35.1	62.1	28.1	9.86	4.56	2.62	1.36	1.03	.83
MAX	6.6	61	4.5	250	181	62	16	5.5	3.8	1.7	1.3	.99
MIN	.32	.48	1.8	1.8	14	18	5.5	3.5	1.9	1.2	.85	.65
AC-FT	105	566	144	2,160	3,450	1,730	587	281	156	84	63	50

CAL YR 1972 TOTAL 710.59 MEAN 1.94 MAX 61 MIN .18 AC-FT 1,410
WTR YR 1973 TOTAL 4,722.73 MEAN 12.9 MAX 250 MIN .32 AC-FT 9,370

PEAK DISCHARGE (BASE, 70 CFS)

DATE	TIME	G.H.	DISCHARGE	DATE	TIME	G.H.	DISCHARGE
11-15	1745	4.57	177	2-6	1400	6.18	334
1-9	1530	3.59	94	2-10	2200	4.56	190
1-16	0845	9.10	672	2-13	0330	3.83	130
1-18	0845	6.55	373	2-27	1600	6.28	344

11160300 ZAYANTE CREEK AT ZAYANTE, CALIF.

LOCATION.--Lat 37°05'10", long 122°02'45", in SE¼ sec.2, T.10 S., R.2 W., Santa Cruz County, on left bank at downstream side of bridge on Zayante Road in town of Zayante, 0.4 mile upstream from Lompico Creek, 2.0 miles east of Ben Lomond, and 3.2 miles upstream from mouth.

DRAINAGE AREA.--11.1 sq mi.

PERIOD OF RECORD.--October 1957 to current year.

GAGE.--Water-stage recorder. Altitude of gage is 390 ft (from topographic map).

AVERAGE DISCHARGE.--16 years, 11.4 cfs (8,260 acre-ft per year).

EXTREMES.--Current year: Maximum discharge, 2,400 cfs Jan. 16 (gage height, 6.47 ft); minimum daily, 0.20 cfs Oct. 7.
Period of record: Maximum discharge, 3,700 cfs Apr. 2, 1958 (gage height, 7.70 ft), from rating curve extended above 1,200 cfs on basis of slope-area measurement of maximum flow; no flow at times, caused by filling of pools upstream.

REMARKS.--Records good. No known regulation; only small diversion above station for individual use. Records of chemical analyses, water temperatures, and suspended-sediment discharge for the current year are published in Part 2 of this report.

DISCHARGE, IN CUBIC FEET PER SECOND, WATER YEAR OCTOBER 1972 TO SEPTEMBER 1973

DAY	OCT	NOV	DEC	JAN	FEB	MAR	APR	MAY	JUN	JUL	AUG	SEP
1	.30	.77	2.7	1.8	20	89	13	5.5	3.3	1.6	.70	.63
2	.35	.77	2.5	1.7	18	61	12	5.3	3.3	1.5	.77	.57
3	.40	1.0	2.8	1.7	83	62	11	5.1	3.3	1.4	.77	.63
4	.35	5.7	4.2	1.7	76	53	11	5.1	3.3	1.3	.77	.57
5	.30	1.6	3.0	1.7	43	43	11	4.9	3.2	1.2	.77	.63
6	.26	1.1	8.0	1.6	356	76	10	4.7	2.9	1.2	.84	.57
7	.20	2.1	6.5	1.6	148	51	10	4.7	2.8	1.2	.84	.57
8	.23	1.4	5.5	12	68	48	9.3	4.7	2.6	1.3	.94	.45
9	.57	1.1	4.6	114	139	40	9.0	4.7	2.5	1.2	.84	.40
10	2.5	5.5	4.2	35	356	36	9.0	4.6	2.3	1.2	.77	.51
11	1.0	14	4.0	22	268	35	9.0	4.4	2.5	1.1	.77	.57
12	1.2	4.4	3.8	23	143	31	9.0	4.4	2.6	1.2	.77	.51
13	.77	107	3.6	18	160	28	8.6	4.4	2.6	1.2	.92	.51
14	2.6	100	3.3	14	131	25	8.6	4.4	2.6	1.2	.77	.51
15	7.7	118	3.0	14	81	24	8.3	4.4	2.6	1.3	.63	.51
16	5.1	47	3.0	748	62	22	8.0	4.2	2.6	1.3	.57	.57
17	6.9	16	3.6	117	53	22	7.8	4.0	2.8	1.3	.57	.57
18	3.6	9.9	3.2	358	42	20	7.8	3.8	2.6	1.2	.63	.57
19	1.8	7.8	4.0	122	38	35	7.5	3.8	2.5	1.2	.63	.57
20	1.4	6.8	3.3	60	33	26	7.1	3.8	2.2	1.1	.63	.57
21	1.2	5.8	3.0	40	29	28	6.8	3.8	2.1	1.0	.57	.63
22	1.1	5.3	3.6	30	26	23	6.8	3.8	2.0	1.0	.57	.57
23	1.0	4.9	3.0	26	24	20	6.5	3.8	2.0	.92	.57	.63
24	.92	4.6	3.0	24	36	19	6.5	3.8	2.0	.84	.63	.63
25	.84	4.2	2.8	22	23	18	6.5	3.6	1.7	.84	.57	.57
26	.84	3.8	2.6	20	99	17	6.5	3.5	1.6	.77	.57	.51
27	.84	3.5	2.5	19	303	16	6.3	3.3	1.7	.70	.70	.45
28	.77	3.2	2.3	18	249	15	6.3	3.3	1.7	.77	.70	.45
29	.77	3.0	2.2	24	------	14	6.3	3.2	1.7	.84	.63	.40
30	.77	2.8	2.1	28	------	14	6.0	3.2	1.6	1.0	.63	.45
31	.70	------	2.0	22	------	14	------	3.3	------	.84	.63	------
TOTAL	47.28	493.04	107.9	1,941.8	3,107	1,025	251.5	129.5	73.2	34.72	21.57	16.28
MEAN	1.53	16.4	3.48	62.6	111	33.1	8.38	4.18	2.44	1.12	.70	.54
MAX	7.7	118	8.0	748	356	89	13	5.5	3.3	1.6	.92	.63
MIN	.20	.77	2.0	1.6	12	14	6.0	3.2	1.6	.70	.57	.40
AC-FT	94	978	214	3,850	6,160	2,030	499	257	145	69	43	32

CAL YR 1972 TOTAL 972.26 MEAN 2.66 MAX 118 MIN .10 AC-FT 1,930
WTR YR 1973 TOTAL 7,248.79 MEAN 19.9 MAX 748 MIN .20 AC-FT 14,380

PEAK DISCHARGE (BASE, 450 CFS)

DATE	TIME	G.H.	DISCHARGE	DATE	TIME	G.H.	DISCHARGE
11-13	1830	3.96	494	2-10	1900	4.58	828
1-16	1030	6.47	2,400	2-27	1500	4.37	702
2-6	1100	4.60	840				

11160500 SAN LORENZO RIVER AT BIG TREES, CALIF.

LOCATION.--Lat 37°02'40", long 122°04'17", in Zayante Grant, Santa Cruz County, on right bank 20 ft upstream from bridge on Henry Cowell State Park Road, 200 ft upstream from Shingle Mill Creek, 0.3 mile downstream from Zayante Creek, 0.9 mile northwest of Big Trees station on Southern Pacific Railroad, and 5.3 miles northwest of Santa Cruz. Prior to Oct. 6, 1972, at site 1.3 miles downstream.

DRAINAGE AREA.--106 sq mi.

PERIOD OF RECORD.--October 1936 to current year. Monthly discharge only for some periods, published in WSP 1315-B.

GAGE.--Water-stage recorder. Datum of gage is 227.00 ft above mean sea level (Santa Cruz County bench mark). Prior to Oct. 6, 1972, at site 1.3 miles downstream at different datum.

AVERAGE DISCHARGE.--37 years, 136 cfs (98,530 acre-ft per year).

EXTREMES.--Current year: Maximum discharge, 11,800 cfs Jan. 16 (gage height, 22.53 ft), from rating curve extended above 4,600 cfs; minimum daily, 11 cfs Oct. 2, 3.
Period of record: Maximum discharge, 30,400 cfs Dec. 23, 1955 (gage height, 22.55 ft, site and datum then in use), from rating curve extended above 11,000 cfs on basis of slope-area measurement of maximum flow; minimum, 0.8 cfs (regulated) June 25, 1939; minimum daily, 7.5 cfs July 1, 1939.

REMARKS.--Records good. Flow regulated by Loch Lomond Reservoir since 1961 (capacity, 8,400 acre-ft). Many small diversions above station for domestic supply. Records of chemical analyses, water temperatures, and total-sediment discharge for the current year are published in Part 2 of this report.

REVISIONS (WATER YEARS).--WSP 1315-B: 1938(M). WSP 1715: Drainage area.

DISCHARGE, IN CUBIC FEET PER SECOND, WATER YEAR OCTOBER 1972 TO SEPTEMBER 1973

DAY	OCT	NOV	DEC	JAN	FEB	MAR	APR	MAY	JUN	JUL	AUG	SEP
1	12	15	35	38	280	1,090	202	78	49	29	21	16
2	11	17	33	38	250	794	187	77	49	29	19	17
3	11	17	41	37	620	786	170	76	48	28	20	17
4	12	68	52	36	815	730	163	74	48	27	21	17
5	12	33	41	37	551	614	156	74	46	27	21	17
6	13	25	139	36	2,980	832	149	74	44	25	22	17
7	13	33	94	36	1,680	656	143	72	42	25	21	15
8	14	31	83	206	833	639	133	69	40	26	20	16
9	16	24	65	1,130	984	532	132	70	37	26	20	16
10	27	91	57	575	2,860	485	128	67	37	25	20	16
11	58	230	53	404	2,440	481	122	66	35	25	20	16
12	40	74	50	461	1,450	414	119	65	39	24	20	16
13	24	1,110	48	315	1,910	368	119	64	39	25	20	16
14	36	1,430	46	247	1,530	337	116	64	39	26	19	15
15	103	1,440	44	220	1,110	312	113	64	39	27	18	16
16	90	848	43	4,590	841	292	109	63	37	27	18	16
17	180	299	53	1,350	677	278	107	60	37	26	16	19
18	70	186	49	3,350	573	260	103	58	36	27	17	15
19	34	137	70	1,130	496	407	101	57	35	26	17	15
20	28	107	55	680	434	454	99	55	33	25	17	17
21	24	86	50	530	388	450	95	57	32	25	16	16
22	22	75	62	410	351	398	91	57	30	26	16	17
23	21	66	54	330	326	337	91	56	28	24	16	21
24	20	58	52	310	486	305	90	54	34	23	17	20
25	17	52	49	310	348	287	87	54	28	23	17	24
26	16	48	46	300	1,070	275	85	53	28	22	18	17
27	16	45	44	280	2,750	261	83	50	29	21	18	15
28	16	41	44	260	2,740	244	82	49	29	21	18	16
29	16	39	41	340	------	228	80	49	29	23	17	15
30	15	37	39	540	------	224	79	48	29	23	17	21
31	15	------	39	350	------	223	------	49	------	23	16	------
TOTAL	1,002	6,762	1,671	18,878	31,773	13,993	3,534	1,923	1,105	779	573	507
MEAN	32.3	225	53.9	609	1,135	451	118	62.0	36.8	25.1	18.5	16.9
MAX	180	1,440	139	4,590	2,980	1,090	202	78	49	29	22	24
MIN	11	15	33	36	250	223	79	48	28	21	16	15
AC-FT	1,990	13,410	3,310	37,440	63,020	27,760	7,010	3,810	2,190	1,550	1,140	1,010

CAL YR 1972 TOTAL 17,036.6 MEAN 46.5 MAX 1,440 MIN 8.3 AC-FT 33,790
WTR YR 1973 TOTAL 82,500.0 MEAN 226 MAX 4,590 MIN 11 AC-FT 163,600

PEAK DISCHARGE (BASE, 1,400 CFS)

DATE	TIME	G.H.	DISCHARGE	DATE	TIME	G.H.	DISCHARGE
11-13	1845	11.81	4,110	2-6	1200	13.79	5,550
11-15	2000	12.48	4,590	2-10	2130	11.73	4,170
1-9	1545	8.34	1,760	2-13	0630	8.79	2,370
1-16	1045	22.53	11,800	2-27	1715	13.70	5,490
1-18	1115	12.51	4,680				

11161570 MAJORS CREEK NEAR SANTA CRUZ, CALIF.

LOCATION.--Lat 36°59'55", long 122°07'13", in Refugio Grant, Santa Cruz County, on left bank 1.5 miles downstream from small left-bank tributary, 1.7 miles upstream from State Highway No. 1, and 5.5 miles northwest of Santa Cruz Post Office.

DRAINAGE AREA.--3.77 sq mi.

PERIOD OF RECORD.--October 1969 to current year.

GAGE.--Water-stage recorder and concrete control. Datum of gage is 348 ft above mean sea level (levels by city of Santa Cruz).

EXTREMES.--Current year: Maximum discharge, 274 cfs Feb. 6 (gage height, 5.76 ft); maximum gage height, 6.29 ft Nov. 14 (backwater from log); minimum daily discharge, 0.92 cfs Oct. 1-4, 9.
Period of record: Maximum discharge, 363 cfs Jan. 21, 1970 (gage height, 5.92 ft), from rating curve extended above 160 cfs on basis of slope-area measurement of maximum flow; maximum gage height, 6.29 ft Nov. 14, 1972 (backwater from log); minimum daily discharge, 0.92 cfs Sept. 29 to Oct. 4, Oct. 9, 1972.

REMARKS.--Records fair. No regulation or diversion above station. Records of discharge include flow diverted through pipeline from pool for municipal supply of city of Santa Cruz as determined by sparling-meter readings furnished by city of Santa Cruz.

DISCHARGE, IN CUBIC FEET PER SECOND, WATER YEAR OCTOBER 1972 TO SEPTEMBER 1973

DAY	OCT	NOV	DEC	JAN	FEB	MAR	APR	MAY	JUN	JUL	AUG	SEP
1	.92	1.1	3.6	2.3	5.6	40	6.8	3.5	2.4	2.0	1.7	1.5
2	.92	1.5	3.5	2.2	5.0	25	6.2	3.3	2.4	2.0	1.7	1.4
3	.92	1.5	3.4	2.2	21	20	5.7	3.0	2.4	1.9	1.7	1.4
4	.92	3.1	3.3	2.2	19	16	5.6	2.9	2.3	1.8	1.7	1.4
5	1.0	1.5	3.3	2.1	11	14	5.6	2.9	2.2	1.9	1.7	1.4
6	1.0	1.5	5.9	2.1	74	25	5.4	2.8	2.4	2.0	1.7	1.4
7	1.0	1.5	4.6	2.1	37	18	5.1	2.8	2.4	2.0	1.6	1.4
8	1.0	1.5	4.1	15	20	15	5.1	2.7	2.3	2.0	1.6	1.4
9	.92	1.1	3.3	37	21	13	4.8	2.7	2.3	2.0	1.6	1.4
10	1.1	4.9	2.9	18	66	12	4.7	2.8	2.2	2.0	1.6	1.4
11	1.3	9.7	2.6	21	67	11	4.6	3.0	2.2	1.9	1.6	1.4
12	1.3	3.1	2.6	24	47	10	4.5	3.2	2.2	1.9	1.6	1.4
13	1.3	25	2.5	14	80	10	4.4	3.2	2.2	1.9	1.6	1.4
14	1.3	30	2.3	9.9	48	9.3	4.4	3.1	2.2	1.9	1.6	1.4
15	1.5	40	2.2	7.8	36	8.6	4.4	3.1	2.2	2.0	1.6	1.3
16	2.3	25	2.1	40	27	8.0	4.0	3.1	2.2	2.0	1.6	1.3
17	10	15	2.4	22	23	7.6	4.0	2.9	2.2	2.0	1.6	1.3
18	2.1	12	2.2	37	21	7.3	4.0	2.8	2.2	1.9	1.6	1.3
19	1.1	10	6.1	24	19	13	4.0	2.8	2.1	1.9	1.6	1.3
20	1.1	9.0	3.5	12	17	13	4.0	2.8	2.1	1.9	1.5	1.3
21	1.1	7.5	3.0	10	16	25	4.0	2.7	2.1	1.9	1.5	1.3
22	1.1	6.4	4.4	8.2	15	15	3.9	2.6	2.1	1.9	1.5	1.3
23	1.1	5.6	3.5	6.8	14	11	3.9	2.8	2.1	1.8	1.5	1.3
24	1.1	5.1	3.2	6.0	17	9.1	3.8	2.4	2.1	1.8	1.5	1.3
25	1.1	4.5	3.0	5.9	14	8.2	3.8	2.6	2.1	1.8	1.5	1.3
26	1.1	4.3	2.8	5.3	50	7.6	3.7	2.2	2.1	1.8	1.5	1.3
27	1.1	4.0	2.6	4.8	97	7.1	3.6	2.2	2.1	1.8	1.5	1.3
28	1.1	3.9	2.5	4.5	79	6.6	3.6	2.1	2.1	1.8	1.5	1.2
29	1.1	3.8	2.4	5.4	------	6.3	3.6	2.2	2.0	1.8	1.5	1.2
30	1.1	3.7	2.4	10	------	8.1	3.5	2.4	2.0	1.7	1.5	1.2
31	1.1	------	2.3	7.0	------	8.2	------	2.5	------	1.7	1.5	------
TOTAL	45.10	246.8	98.5	370.8	966.6	408.0	134.7	86.1	65.9	58.7	49.0	40.2
MEAN	1.45	8.23	3.18	12.0	34.5	13.2	4.49	2.78	2.20	1.89	1.58	1.34
MAX	10	40	6.1	40	97	40	6.8	3.5	2.4	2.0	1.7	1.5
MIN	.92	1.1	2.1	2.1	5.0	6.3	3.5	2.1	2.0	1.7	1.5	1.2
AC-FT	89	490	195	735	1,920	809	267	171	131	116	97	80

CAL YR 1972 TOTAL 844.34 MEAN 2.31 MAX 40 MIN .92 AC-FT 1,670
WTR YR 1973 TOTAL 2,570.40 MEAN 7.04 MAX 97 MIN .92 AC-FT 5,100

PEAK DISCHARGE (BASE, 80 CFS)

DATE	TIME	G.H.	DISCHARGE	DATE	TIME	G.H.	DISCHARGE
11-14	0130	a 6.29	200	2-10	2100	5.55	235
1-8	1830	4.85	81	2-13	0600	5.20	145
1-16	1130	5.04	113	2-27	1630	5.32	173
2-6	1030	5.76	274				

a Backwater from log.

11161590 LAGUNA CREEK NEAR DAVENPORT, CALIF.

LOCATION.--Lat 37°01'32", long 122°07'48", in SW¼SW¼ sec.30, T.10 S., R.2 W., Santa Cruz County, on right bank 0.2 mile upstream from Reggiardo Creek, 0.4 mile downstream from small left-bank tributary, and 3.6 miles northeast of Davenport.

DRAINAGE AREA.--3.07 sq mi.

PERIOD OF RECORD.--October 1969 to current year.

GAGE.--Water-stage recorder and concrete control. Altitude of gage is 680 ft (from topographic map).

EXTREMES.--Current year: Maximum discharge, 157 cfs Jan. 16 (gage height, 3.08 ft); minimum daily, 0.47 cfs Oct. 7.
Period of record: Maximum discharge, 264 cfs Jan. 21, 1970 (gage height, 3.60 ft), from rating curve extended above 120 cfs; minimum daily, 0.28 cfs Aug. 30, 31, 1972.

REMARKS.--Records good. No regulation or diversion above station.

DISCHARGE, IN CUBIC FEET PER SECOND, WATER YEAR OCTOBER 1972 TO SEPTEMBER 1973

DAY	OCT	NOV	DEC	JAN	FEB	MAR	APR	MAY	JUN	JUL	AUG	SEP
1	.59	.76	2.9	2.2	8.3	35	15	7.7	4.7	3.3	2.8	2.0
2	.56	.76	2.7	2.2	7.8	25	14	7.6	4.7	3.4	2.8	2.0
3	.53	1.3	3.3	2.2	12	28	13	7.4	4.7	3.4	2.8	2.0
4	.53	5.1	3.5	2.1	13	25	13	7.4	4.7	3.3	2.7	2.0
5	.53	2.1	2.9	2.1	11	23	13	7.3	4.6	3.3	2.7	2.1
6	.53	1.5	5.5	2.1	43	30	13	7.1	4.4	3.2	2.7	2.0
7	.47	1.8	4.4	2.1	29	25	12	7.0	4.4	3.2	2.7	1.9
8	.53	1.4	4.0	7.4	19	25	12	6.9	4.4	3.2	2.7	1.9
9	.60	1.3	3.5	29	25	22	12	6.7	4.3	3.1	2.6	1.9
10	.68	3.5	3.3	15	52	22	12	6.5	4.3	3.1	2.5	1.9
11	1.0	10	3.3	16	49	23	11	6.5	4.3	3.1	2.5	1.9
12	.84	4.5	3.1	18	38	21	11	6.5	4.2	3.1	2.5	1.9
13	.76	25	2.7	13	48	19	11	6.1	4.2	3.1	2.5	1.9
14	1.1	30	2.5	11	42	18	10	5.9	4.0	3.1	2.5	1.9
15	1.6	35	2.5	10	30	18	10	5.9	4.0	3.1	2.4	1.9
16	2.2	20	2.4	51	25	17	10	5.8	4.0	3.1	2.4	1.7
17	7.1	10	2.7	22	22	17	9.8	5.6	3.9	3.0	2.2	1.6
18	2.5	7.4	2.5	33	20	16	9.8	5.6	3.9	3.0	2.2	1.6
19	1.8	5.9	4.9	21	18	21	9.6	5.6	3.8	2.9	2.2	1.6
20	1.5	4.9	3.7	16	17	20	9.5	5.6	3.7	2.9	2.2	1.9
21	1.3	4.4	3.3	14	16	24	9.3	5.5	3.7	2.9	2.2	1.8
22	1.1	4.0	4.4	12	15	21	9.2	5.4	3.7	2.9	2.1	1.9
23	1.1	3.7	3.9	11	14	19	9.0	5.4	3.6	3.1	2.1	1.9
24	1.0	3.3	3.5	9.9	16	17	8.8	5.4	3.6	3.0	2.2	2.0
25	.94	3.1	3.2	9.3	14	17	8.6	5.3	3.5	3.0	2.2	1.9
26	.94	3.1	2.7	8.6	25	16	8.5	5.2	3.5	2.9	2.2	1.8
27	.94	3.3	2.7	8.1	60	16	8.3	5.1	3.5	3.0	2.2	1.8
28	.84	3.1	2.5	7.7	65	15	8.0	5.1	3.4	3.0	2.1	1.7
29	.84	3.1	2.4	8.9	------	15	8.0	4.7	3.4	2.9	2.1	1.7
30	.84	2.9	2.4	11	------	16	7.9	4.7	3.3	2.9	2.0	1.7
31	.84	------	2.2	9.5	------	16	------	4.7	------	2.8	2.0	------
TOTAL	36.63	206.22	99.5	387.4	754.1	642	316.3	187.2	120.4	95.3	74.0	55.8
MEAN	1.18	6.87	3.21	12.5	26.9	20.7	10.5	6.04	4.01	3.07	2.39	1.86
MAX	7.1	35	5.5	51	65	35	15	7.7	4.7	3.4	2.8	2.1
MIN	.47	.76	2.2	2.1	7.8	15	7.9	4.7	3.3	2.8	2.0	1.6
AC-FT	73	409	197	768	1,500	1,270	627	371	239	189	147	111

CAL YR 1972 TOTAL 671.32 MEAN 1.83 MAX 35 MIN .28 AC-FT 1,330
WTR YR 1973 TOTAL 2,974.85 MEAN 8.15 MAX 65 MIN .47 AC-FT 5,900

PEAK DISCHARGE (BASE, 110 CFS)

DATE	TIME	G.H.	DISCHARGE	DATE	TIME	G.H.	DISCHARGE
11-15	unknown	3.03	149	2-10	1945	2.91	130
1-16	1030	3.08	157	2-27	unknown	2.96	138

11161800 SAN VICENTE CREEK NEAR DAVENPORT, CALIF.

LOCATION.--Lat 37°03'19", long 122°10'52", on east boundary of San Vicente Grant, Santa Cruz County, on right bank 0.6 mile downstream from small right-bank tributary, 1.2 miles upstream from Mill Creek, and 3.1 miles north of Davenport.

DRAINAGE AREA.--6.07 sq mi.

PERIOD OF RECORD.--October 1969 to current year.

GAGE.--Water-stage recorder and concrete dam. Altitude of gage is 740 ft (from topographic map).

EXTREMES.--Current year: Maximum discharge, 253 cfs Feb. 28 (gage height, 4.68 ft); minimum daily, 0.70 cfs Oct. 1-3.
Period of record: Maximum discharge, 335 cfs Jan. 21, 1970 (gage height, 4.90 ft); minimum daily, 0.39 cfs Aug. 24, 31, Sept. 1, 2, 7, 1972.

REMARKS.--Records good. No regulation or diversion above station.

DISCHARGE, IN CUBIC FEET PER SECOND, WATER YEAR OCTOBER 1972 TO SEPTEMBER 1973

DAY	OCT	NOV	DEC	JAN	FEB	MAR	APR	MAY	JUN	JUL	AUG	SEP
1	.70	.90	3.8	4.3	18	65	19	11	6.7	4.1	2.9	2.1
2	.70	.90	3.8	4.3	17	53	19	11	6.5	4.1	2.6	2.1
3	.70	1.9	4.6	4.3	20	58	18	11	6.5	4.0	2.6	2.1
4	.80	7.4	5.7	4.0	23	54	18	10	6.3	4.0	2.6	2.1
5	.80	3.0	4.6	4.0	22	48	17	10	6.1	3.8	2.6	2.2
6	.80	2.4	9.0	4.0	63	52	17	10	5.9	3.8	2.6	2.2
7	1.0	3.0	7.3	4.0	54	47	16	10	5.7	3.8	2.6	2.1
8	1.6	2.6	6.7	9.8	39	47	16	9.5	5.6	3.8	2.6	2.1
9	2.6	2.4	6.1	27	39	43	15	9.3	5.4	3.6	2.6	2.1
10	3.2	4.1	5.9	18	88	41	15	9.1	5.4	3.5	2.5	2.1
11	5.4	9.3	5.7	19	86	41	15	9.1	5.4	3.5	2.5	2.1
12	2.1	5.6	5.2	23	69	38	15	8.8	5.4	3.5	2.5	2.0
13	1.7	38	5.0	18	65	35	15	8.8	5.3	3.5	2.5	2.0
14	4.4	50	4.6	15	80	32	15	8.6	5.3	3.5	2.2	2.0
15	6.6	60	4.6	15	62	30	15	8.6	5.3	3.6	2.1	2.1
16	8.4	43	4.6	86	51	29	14	8.4	5.3	3.6	2.1	2.1
17	13	20	5.0	43	46	28	14	8.0	5.3	3.6	2.0	2.1
18	4.0	15	5.0	57	42	27	14	7.8	5.2	3.5	2.0	2.1
19	3.0	11	8.6	39	38	30	13	7.8	5.2	3.5	2.0	2.1
20	2.5	9.5	6.9	31	36	31	13	7.8	5.2	3.3	2.0	2.5
21	2.2	8.4	6.3	28	33	31	13	7.8	5.2	3.3	2.0	2.1
22	2.0	7.6	7.8	24	30	30	13	7.8	5.0	3.2	1.8	2.4
23	1.7	6.5	6.9	22	29	27	13	7.6	4.8	3.0	1.8	2.4
24	1.5	6.1	6.5	20	33	24	12	7.3	4.8	3.0	1.8	2.4
25	1.3	5.6	5.9	19	29	24	12	7.3	4.6	2.7	2.1	2.1
26	1.2	5.4	5.7	18	46	23	12	7.1	4.6	2.7	2.2	2.0
27	1.2	4.8	5.6	17	116	23	12	6.9	4.4	2.7	2.2	2.0
28	1.0	4.6	5.4	16	122	22	12	6.9	4.4	2.7	2.2	1.7
29	1.0	4.3	5.0	17	------	19	12	6.5	4.4	2.9	2.2	1.7
30	.90	4.0	4.6	21	------	20	12	6.5	4.1	2.9	2.2	1.7
31	.90	------	4.6	20	------	21	------	6.7	------	2.9	2.2	------
TOTAL	78.90	347.30	177.0	651.7	1,421	1,093	436	263.0	159.3	105.6	70.8	62.8
MEAN	2.55	11.6	5.71	21.0	50.8	35.3	14.5	8.48	5.31	3.41	2.28	2.09
MAX	13	60	9.0	86	122	65	19	11	6.7	4.1	2.9	2.5
MIN	.70	.90	3.8	4.0	17	19	12	6.5	4.1	2.7	1.8	1.7
AC-FT	156	689	351	1,290	2,820	2,170	865	522	316	209	140	125

CAL YR 1972 TOTAL 1,115.77 MEAN 3.05 MAX 60 MIN .39 AC-FT 2,210
WTR YR 1973 TOTAL 4,866.40 MEAN 13.3 MAX 122 MIN .70 AC-FT 9,650

PEAK DISCHARGE (BASE, 100 CFS)

DATE	TIME	G.H.	DISCHARGE	DATE	TIME	G.H.	DISCHARGE
11-13	1800	4.22	127	2-10	2100	4.37	160
11-15	1900	4.39	165	2-13	0500	4.17	118
1-16	1000	4.60	225	2-28	0100	4.68	253
2-6	1400	4.17	118				

11161900 SCOTT CREEK ABOVE LITTLE CREEK, NEAR DAVENPORT, CALIF.

LOCATION.--Lat 37°03'51", long 122°13'42", in Agua Puerco y Las Trancas Grant, Santa Cruz County, on left bank 600 ft upstream from Little Creek, 2.0 miles upstream from mouth, and 4.2 miles north of Davenport.

DRAINAGE AREA.--25.1 sq mi.

PERIOD OF RECORD.--October 1958 to September 1973 (discontinued).

GAGE.--Water-stage recorder. Altitude of gage is 30 ft (from topographic map).

AVERAGE DISCHARGE.--15 years, 30.6 cfs (22,170 acre-ft per year).

EXTREMES.--Current year: Maximum discharge, 1,550 cfs Jan. 16 (gage height, 5.25 ft); minimum daily, 0.69 cfs Oct. 7.
Period of record: Maximum discharge, 1,970 cfs Feb. 13, 1962 (gage height, 9.36 ft), from rating curve extended above 650 cfs on basis of slope-area measurement at gage height 7.35 ft; no flow Aug. 23-25, Sept. 23-25, 1972.

REMARKS.--Records good. No regulation; small diversions above station for irrigation.

DISCHARGE, IN CUBIC FEET PER SECOND, WATER YEAR OCTOBER 1972 TO SEPTEMBER 1973

DAY	OCT	NOV	DEC	JAN	FEB	MAR	APR	MAY	JUN	JUL	AUG	SEP
1	1.2	2.1	21	22	93	389	75	32	14	6.2	2.8	1.6
2	1.1	2.2	21	21	85	290	72	31	14	6.0	2.8	1.7
3	.99	2.7	22	21	100	269	70	30	14	5.6	2.8	1.7
4	.86	25	29	20	120	255	67	29	13	5.5	2.7	1.8
5	.87	13	23	19	114	214	63	29	13	5.2	2.7	1.9
6	.78	8.4	38	19	394	230	60	28	12	5.0	2.9	1.9
7	.69	9.7	36	19	364	198	58	27	11	5.0	2.9	1.5
8	.75	9.7	34	32	255	180	55	25	11	5.0	2.9	1.4
9	1.1	8.1	31	132	237	170	54	25	11	4.8	2.8	1.1
10	2.5	18	30	110	448	155	52	24	10	4.7	2.6	1.3
11	12	60	28	110	452	145	51	23	11	4.5	2.5	1.7
12	9.1	35	26	147	398	135	48	23	11	4.7	2.4	1.6
13	5.5	196	25	113	575	125	48	23	10	4.8	2.4	1.4
14	6.2	267	24	95	497	115	48	22	10	4.7	2.3	1.4
15	13	336	24	84	364	108	47	21	9.7	4.7	2.1	1.4
16	15	248	23	624	269	100	46	20	9.7	4.8	2.0	1.4
17	34	142	25	356	237	95	44	20	9.2	4.9	1.9	1.4
18	18	102	23	448	211	90	43	19	9.2	4.9	2.0	1.5
19	10	80	40	328	186	100	42	18	8.5	4.6	2.0	1.4
20	7.6	60	36	234	166	140	41	18	8.2	4.5	1.8	2.1
21	6.2	53	32	189	151	130	40	18	7.8	4.3	1.7	2.1
22	5.0	46	39	153	136	120	39	18	7.8	4.2	1.7	1.9
23	4.4	41	37	134	127	110	38	17	7.5	3.7	1.7	2.7
24	4.0	37	35	116	151	100	37	17	7.5	3.6	1.7	2.3
25	3.6	34	32	108	127	95	36	17	7.2	3.3	1.8	2.1
26	3.2	30	30	97	214	90	36	16	6.9	3.1	1.8	1.8
27	3.0	27	29	86	715	88	35	16	6.9	3.2	1.9	1.5
28	2.7	25	27	80	760	84	35	15	6.9	3.2	1.9	1.4
29	2.5	24	25	93	------	80	35	14	6.6	3.3	1.8	1.5
30	3.1	23	24	108	------	78	33	14	6.2	3.2	1.8	1.5
31	2.3	------	23	102	------	76	------	14	------	3.1	1.7	------
TOTAL	181.24	1,964.9	892	4,220	7,946	4,554	1,448	663	290.8	138.3	68.8	50.0
MEAN	5.85	65.5	28.8	136	284	147	48.3	21.4	9.69	4.46	2.22	1.67
MAX	34	336	40	624	760	389	75	32	14	6.2	2.9	2.7
MIN	.69	2.1	21	19	85	76	33	14	6.2	3.1	1.7	1.1
AC-FT	359	3,900	1,770	8,370	15,760	9,030	2,870	1,320	577	274	136	99

CAL YR 1972 TOTAL 4,591.51 MEAN 12.5 MAX 336 MIN 0 AC-FT 9,110
WTR YR 1973 TOTAL 22,417.04 MEAN 61.4 MAX 760 MIN .69 AC-FT 44,460

PEAK DISCHARGE (BASE, 300 CFS)

DATE	TIME	G.H.	DISCHARGE	DATE	TIME	G.H.	DISCHARGE
11-15	1830	4.23	828	2-10	2130	3.32	575
1-16	1045	5.25	1,550	2-14	1100	3.45	640
1-18	1400	3.37	600	2-27	1730	4.66	1,220
2-6	1500	3.41	620	3-6	1000	2.91	385

11162500 PESCADERO CREEK NEAR PESCADERO, CALIF.

LOCATION.--Lat 37°15'39", long 122°19'40", in SW¼ sec.5, T.8 S., R.4 W., San Mateo County, on left bank at downstream side of highway bridge, 3.0 miles east of Pescadero, and 5.3 miles upstream from mouth.

DRAINAGE AREA.--45.9 sq mi.

PERIOD OF RECORD.--April 1951 to current year.

GAGE.--Water-stage recorder. Datum of gage is 62.3 ft above mean sea level.

AVERAGE DISCHARGE.--22 years, 41.7 cfs (30,210 acre-ft per year).

EXTREMES.--Current year: Maximum discharge, 5,380 cfs Jan. 16 (gage height, 15.21 ft); minimum daily, 1.2 cfs Oct. 5-8.
Period of record: Maximum discharge, 9,420 cfs Dec. 23, 1955 (gage height, 21.27 ft), from rating curve extended above 2,700 cfs on basis of slope-area measurement of maximum flow; no flow at times.

REMARKS.--Records good. Minor regulation from swimming pools in San Mateo County Memorial Park and Portola State Park during summer months. Small diversions above station by pumping. Records of water temperatures for the current year are published in Part 2 of this report.

REVISIONS (WATER YEARS).--WSP 1445: 1952-53(M). WSP 1715: Drainage area.

DISCHARGE, IN CUBIC FEET PER SECOND, WATER YEAR OCTOBER 1972 TO SEPTEMBER 1973

DAY	OCT	NOV	DEC	JAN	FEB	MAR	APR	MAY	JUN	JUL	AUG	SEP
1	1.3	2.4	13	14	105	348	90	25	11	6.4	4.3	2.6
2	1.3	2.4	13	14	97	244	70	25	11	6.0	4.1	2.5
3	1.3	2.8	14	14	118	219	60	25	11	6.0	4.0	2.6
4	1.3	17	23	13	183	257	55	22	11	6.1	3.9	5.1
5	1.2	16	19	12	149	216	53	21	11	5.8	3.8	2.8
6	1.2	9.8	33	12	674	232	50	20	10	5.7	3.9	2.5
7	1.2	8.5	37	11	669	200	49	20	9.7	5.6	3.9	2.6
8	1.2	11	36	15	290	193	47	19	9.4	5.4	4.1	2.5
9	1.8	8.2	31	315	242	165	45	18	9.1	5.6	4.0	2.3
10	10	16	28	232	579	153	44	17	8.5	5.6	4.0	2.3
11	50	112	25	134	502	167	42	17	8.6	5.4	4.1	2.2
12	24	47	23	154	379	146	40	17	8.5	5.3	3.8	2.3
13	10	164	21	106	594	129	40	16	7.3	5.5	3.8	2.4
14	7.3	444	19	80	421	115	40	15	9.1	5.6	3.7	2.5
15	28	368	18	67	320	105	38	15	8.8	5.5	3.6	2.5
16	25	386	18	1,810	241	95	37	15	9.1	5.5	3.4	2.7
17	32	134	20	576	191	90	36	15	8.8	5.5	3.3	2.5
18	24	80	20	1,690	155	85	35	14	8.6	5.7	3.4	2.6
19	16	57	31	563	132	112	35	14	8.3	5.6	3.4	2.7
20	11	44	28	283	114	161	34	14	8.0	5.7	3.0	3.0
21	7.2	36	25	212	101	144	32	14	7.4	5.7	2.9	3.3
22	5.2	31	30	163	93	148	31	14	7.1	5.3	2.8	3.4
23	4.2	27	28	132	94	123	31	14	7.1	5.4	2.8	3.4
24	3.8	24	27	114	110	110	30	14	7.5	5.2	3.0	4.0
25	3.4	20	25	107	96	95	29	14	7.0	5.2	3.1	3.7
26	3.3	18	22	94	205	90	28	13	6.8	5.0	3.1	3.1
27	2.9	16	21	95	812	85	27	12	6.6	4.7	3.1	2.7
28	2.6	14	21	101	782	80	27	12	6.6	4.7	3.1	2.5
29	2.5	13	18	121	------	75	26	11	6.6	4.8	3.0	2.3
30	2.3	12	17	178	------	102	26	11	6.5	4.7	2.8	2.2
31	2.4	------	16	158	------	110	------	11	------	4.3	2.6	------
TOTAL	288.9	2,141.1	720	7,590	9,448	4,594	1,227	504	256.0	168.5	107.8	83.8
MEAN	9.32	71.4	23.2	245	302	148	40.9	16.3	8.53	5.44	3.48	2.79
MAX	50	444	37	1,810	812	348	90	25	11	6.4	4.3	5.1
MIN	1.2	2.4	13	11	93	75	26	11	6.5	4.3	2.6	2.2
AC-FT	573	4,250	1,430	15,050	16,760	9,110	2,430	1,000	508	334	214	166

CAL YR 1972 TOTAL 4,631.67 MEAN 12.7 MAX 444 MIN .24 AC-FT 9,190
WTR YR 1973 TOTAL 26,129.10 MEAN 71.6 MAX 1,810 MIN 1.2 AC-FT 51,830

PEAK DISCHARGE (BASE, 700 CFS)

DATE	TIME	G.H.	DISCHARGE	DATE	TIME	G.H.	DISCHARGE
11-15	2215	6.41	846	2-10	0315	6.27	858
1-16	1115	15.21	5,380	2-13	0700	6.02	776
1-18	1200	10.72	2,810	2-27	1845	9.45	2,180
2-6	2215	7.98	1,510				

11162540 BUTANO CREEK NEAR PESCADERO, CALIF.

LOCATION.--Lat 37°14'01", long 122°21'56", in Butano Grant, San Mateo County, on right bank 0.2 mile downstream from small right-bank tributary, and 1.7 miles southeast of Pescadero.

DRAINAGE AREA.--18.3 sq mi.

PERIOD OF RECORD.--Occasional low-flow measurements, water years 1957, 1959-62, and annual maximum, water years 1959-62. June 1962 to current year.

GAGE.--Water-stage recorder. Altitude of gage is 70 ft (from topographic map). February 1957 to June 22, 1962, crest-stage gage at site 500 ft (revised) downstream at same datum.

AVERAGE DISCHARGE.--11 years, 20.5 cfs (14,850 acre-ft per year).

EXTREMES.--Current year: Maximum discharge, 1,420 cfs Jan. 16 (gage height, 15.67); minimum daily, 0.70 cfs Oct. 6-8.

Period of record: Maximum discharge, 1,600 cfs Feb. 13, 1962 (gage height, 10.04 ft, crest-stage gage, from floodmarks), by slope-area measurement of maximum flow; maximum gage height, 18.35 ft Jan. 21, 1967; no flow July 29 to Aug. 1, 1964.

REMARKS.--Records good. No regulation; small diversions above station for irrigation.

DISCHARGE, IN CUBIC FEET PER SECOND, WATER YEAR OCTOBER 1972 TO SEPTEMBER 1973

DAY	OCT	NOV	DEC	JAN	FEB	MAR	APR	MAY	JUN	JUL	AUG	SEP
1	.90	3.0	11	10	51	167	33	8.3	4.4	2.6	1.3	1.0
2	.97	2.7	10	9.6	46	110	30	8.0	4.2	2.5	1.3	.92
3	.94	3.2	10	9.7	51	107	27	7.7	4.4	2.5	1.2	1.1
4	.83	12	13	9.3	51	110	25	7.5	4.1	2.6	1.2	.99
5	.83	8.3	11	8.6	48	93	24	7.4	4.3	2.4	1.2	1.2
6	.70	6.3	18	8.3	163	124	22	7.5	4.1	2.2	1.2	1.3
7	.70	6.7	19	8.0	189	109	21	7.1	3.8	2.3	1.2	1.0
8	.70	6.3	18	16	121	109	20	6.7	3.5	2.2	1.3	1.2
9	2.3	5.5	16	101	105	87	18	6.6	3.3	2.0	1.3	.93
10	4.4	13	15	98	207	81	18	6.7	3.4	2.0	1.0	1.0
11	59	56	13	75	186	89	17	6.5	3.4	2.3	1.2	1.1
12	18	30	13	92	153	77	16	6.2	4.0	2.4	1.5	1.2
13	9.0	105	12	70	185	68	16	5.9	3.9	2.1	1.3	1.3
14	8.7	223	11	55	193	61	15	5.8	4.1	2.0	1.2	1.3
15	25	236	10	47	164	54	14	6.0	4.0	2.0	1.3	1.2
16	26	211	10	584	122	49	14	5.7	3.7	1.8	1.1	1.1
17	26	104	12	241	98	46	14	5.8	3.5	1.9	.99	.98
18	20	70	11	514	82	41	13	5.5	3.2	2.1	1.2	1.1
19	12	52	17	227	72	55	13	5.6	3.3	2.0	1.3	1.3
20	9.2	41	16	117	63	78	12	5.5	3.3	2.0	1.3	1.9
21	7.3	33	15	84	57	85	11	5.3	3.2	2.2	1.3	1.9
22	6.2	28	19	62	51	85	11	5.4	2.6	2.1	1.3	1.6
23	5.5	24	18	48	47	70	11	5.2	2.9	1.8	1.2	2.0
24	4.8	21	18	40	55	60	10	5.3	3.0	1.6	1.2	1.7
25	4.1	18	16	36	45	53	10	5.4	2.8	1.5	1.1	1.4
26	4.0	16	14	41	123	49	9.6	4.9	2.7	1.6	1.2	1.5
27	3.8	15	14	45	364	44	9.3	4.8	2.6	1.3	1.3	1.0
28	3.4	13	14	41	336	41	9.1	4.8	2.7	1.4	1.4	1.1
29	3.3	12	12	49	------	37	8.8	4.7	2.6	1.6	1.2	1.2
30	3.0	11	11	57	------	37	8.7	4.4	2.6	1.5	1.1	1.2
31	2.8	------	11	56	------	40	------	4.5	------	1.3	1.1	------
TOTAL	274.37	1,386.0	428	2,859.5	3,428	2,316	480.5	186.7	103.6	61.8	37.99	37.72
MEAN	8.85	46.2	13.8	92.2	122	74.7	16.0	6.02	3.45	1.99	1.23	1.26
MAX	59	236	19	584	364	167	33	8.3	4.4	2.6	1.5	2.0
MIN	.70	2.7	10	8.0	45	37	8.7	4.4	2.6	1.3	.99	.92
AC-FT	544	2,750	849	5,670	6,800	4,590	953	370	205	123	75	75

CAL YR 1972 TOTAL 2,954.81 MEAN 8.07 MAX 236 MIN .04 AC-FT 5,860
WTR YR 1973 TOTAL 11,600.18 MEAN 31.8 MAX 584 MIN .70 AC-FT 23,010

PEAK DISCHARGE (BASE, 200 CFS)

DATE	TIME	G.H.	DISCHARGE	DATE	TIME	G.H.	DISCHARGE
11-15	1745	9.11	505	2-10	0330	7.36	260
1-16	1045	15.67	1,420	2-14	1230	7.10	224
1-18	1145	11.09	783	2-27	1830	10.63	718
2-6	2145	7.57	290				

11162570 SAN GREGORIO CREEK AT SAN GREGORIO, CALIF.

LOCATION.--Lat 37°19'33", long 122°23'08", in San Gregorio Grant, San Mateo County, on right bank at downstream side of bridge on Old Coast Highway, 0.1 mile south of town of San Gregorio, and 1.4 miles upstream from mouth.

DRAINAGE AREA.--50.9 sq mi (corrected).

PERIOD OF RECORD.--October 1969 to current year.

GAGE.--Water-stage recorder. Datum of gage is 11.40 ft above mean sea level.

EXTREMES.--Current year: Maximum discharge, 3,730 cfs Jan. 16 (gage height, 17.5 ft, from outside high-water marks); minimum daily, 0.42 cfs Oct. 7.
Period of record: Maximum discharge, 3,730 cfs Jan. 16, 1973 (gage height, 17.5 ft, from outside high-water marks); no flow many days in 1972.

REMARKS.--Records good. No regulation or diversion above station.

DISCHARGE, IN CUBIC FEET PER SECOND, WATER YEAR OCTOBER 1972 TO SEPTEMBER 1973

DAY	OCT	NOV	DEC	JAN	FEB	MAR	APR	MAY	JUN	JUL	AUG	SEP
1	.48	4.8	18	25	119	400	76	21	11	4.1	2.5	2.4
2	.48	2.3	18	24	106	250	66	21	9.8	3.8	2.0	2.4
3	.53	3.1	17	24	145	235	60	19	10	3.8	2.5	2.3
4	.60	63	23	23	136	230	54	19	9.9	3.7	2.4	2.4
5	.58	28	18	20	108	210	50	19	11	3.7	2.2	2.3
6	.50	17	53	19	616	280	48	19	8.1	3.6	1.8	2.6
7	.42	25	43	18	439	185	44	18	7.6	3.6	1.9	2.7
8	.44	22	45	42	260	180	40	15	8.0	3.6	2.0	2.1
9	2.1	17	33	374	278	174	38	15	8.4	3.6	2.2	1.5
10	10	101	29	211	545	196	37	15	7.5	3.6	2.3	1.7
11	45	567	26	240	472	243	35	15	6.8	3.5	2.5	1.9
12	18	117	24	236	411	171	32	15	7.3	3.5	2.3	2.2
13	11	340	23	138	600	138	37	15	7.3	3.5	2.8	2.4
14	12	1,050	22	99	580	116	38	14	8.3	3.5	3.1	2.5
15	34	1,090	20	82	500	101	36	14	7.3	3.5	3.1	2.8
16	23	660	20	1,800	380	91	34	13	7.9	3.5	2.4	2.7
17	30	220	42	840	300	84	33	12	8.4	3.5	1.9	2.8
18	27	112	53	1,600	250	80	31	12	8.4	3.4	1.9	2.8
19	13	74	249	700	220	114	30	12	7.9	3.4	1.8	2.8
20	11	54	96	320	190	188	30	12	7.3	3.4	1.8	3.4
21	11	44	62	220	170	161	28	11	5.8	3.4	2.4	7.0
22	7.6	38	111	175	150	126	27	10	4.9	3.4	2.3	4.3
23	7.6	33	75	145	140	102	26	10	5.4	3.4	1.9	3.8
24	7.2	31	68	125	150	91	26	10	5.4	3.4	2.1	4.4
25	8.0	28	51	110	130	84	24	11	5.8	3.4	2.6	4.5
26	4.0	26	44	95	500	78	23	11	5.4	3.3	2.8	3.6
27	4.0	23	42	78	780	74	22	11	4.9	3.3	2.6	2.0
28	3.7	22	40	68	480	67	22	13	4.5	3.3	2.7	1.6
29	3.7	20	34	174	------	61	22	14	4.1	3.2	2.5	1.6
30	3.4	19	30	191	------	83	22	13	4.1	3.2	2.6	1.6
31	3.1	------	28	156	------	116	------	14	------	3.2	2.4	------
TOTAL	303.43	4,851.2	1,457	8,372	9,155	4,709	1,091	443	218.5	108.3	72.3	83.1
MEAN	9.79	162	47.0	270	327	152	36.4	14.3	7.28	3.49	2.33	2.77
MAX	45	1,090	249	1,800	780	400	76	21	11	4.1	3.1	7.0
MIN	.42	2.3	17	18	106	61	22	10	4.1	3.2	1.8	1.5
AC-FT	602	9,620	2,890	16,610	18,160	9,340	2,160	879	433	215	143	165

CAL YR 1972 TOTAL 8,437.98 MEAN 23.1 MAX 1,090 MIN 0 AC-FT 16,740
WTR YR 1973 TOTAL 30,863.83 MEAN 84.6 MAX 1,800 MIN .42 AC-FT 61,220

PEAK DISCHARGE (BASE, 1,000 CFS, REVISED)

DATE	TIME	G.H.	DISCHARGE	DATE	TIME	G.H.	DISCHARGE
11-11	0330	11.12	1,590	2-6	1200	9.60	1,170
11-15	2030	17.07	3,570	2-10	0045	9.75	1,210
1-16	1100	17.5	3,730	2-13	0400	9.27	1,080
1-18	1100	15.1	2,890	2-27	1700	11.03	1,570

NOTE.--No gage-height record Jan. 16-26.

11162630 PILARCITOS CREEK AT HALF MOON BAY, CALIF.

LOCATION.--Lat 37°28'07", long 122°26'08", on north boundary of Miramontes Grant, San Mateo County, on left bank 0.2 mile downstream from State Highway 1, 0.5 mile northwest of town of Half Moon Bay, and 1.0 mile upstream from mouth.

DRAINAGE AREA.--27.2 sq mi.

PERIOD OF RECORD.--July 1966 to current year.

GAGE.--Water-stage recorder. Datum of gage is 23.59 ft above mean sea level.

AVERAGE DISCHARGE.--7 years, 15.4 cfs (11,160 acre-ft per year).

EXTREMES.--Current year: Maximum discharge, 878 cfs Jan. 18 (gage height, 9.14 ft); no flow Oct. 1-8, 10, July 24, 25.
Period of record: Maximum discharge, 1,290 cfs Jan. 30, 1968 (gage height, 11.20 ft); no flow at times in most years.

REMARKS.--Records fair. Flow partly regulated by storage in Pilarcitos Lake 10 miles upstream (capacity, 3,100 acre-ft). Water is diverted to City of San Francisco Water System and small diversions for irrigation above station by pumping.

DISCHARGE, IN CUBIC FEET PER SECOND, WATER YEAR OCTOBER 1972 TO SEPTEMBER 1973

DAY	OCT	NOV	DEC	JAN	FEB	MAR	APR	MAY	JUN	JUL	AUG	SEP
1	0	1.1	5.6	9.0	30	74	30	6.7	3.0	1.5	.75	.47
2	0	.98	5.2	9.4	30	59	24	6.4	2.8	1.2	.75	.64
3	0	5.4	6.1	11	40	100	24	5.8	3.2	.58	.83	.98
4	0	17	6.9	10	34	88	22	5.6	3.0	.40	.85	.88
5	0	5.4	5.0	8.5	31	71	19	5.5	2.8	.59	.98	.57
6	0	3.9	7.3	7.4	144	95	19	5.4	2.3	.57	1.2	.42
7	0	7.9	6.7	7.4	147	80	16	4.8	2.1	.64	1.0	.42
8	0	3.9	5.4	21	100	110	16	4.4	1.9	.83	1.2	.36
9	.75	3.9	4.8	64	88	75	15	4.2	1.8	.68	1.4	.16
10	0	26	4.6	51	148	78	15	4.8	2.3	.43	1.4	.52
11	7.6	94	4.3	70	111	79	14	4.4	2.3	.41	1.5	.18
12	7.1	20	4.3	73	147	60	14	4.1	2.3	.42	1.6	.39
13	6.6	49	4.1	47	172	50	13	4.6	2.1	.37	1.6	.62
14	8.2	144	3.9	32	207	45	12	4.6	1.9	1.6	1.6	.67
15	25	90	3.9	23	132	42	12	4.4	1.9	1.4	.81	.78
16	6.3	50	3.9	334	96	40	11	3.6	1.9	1.1	.84	.69
17	6.2	36	14	217	74	38	11	3.6	1.9	1.0	.66	.74
18	4.7	25	17	532	60	35	10	3.6	1.6	1.1	.68	.64
19	4.0	16	65	258	50	81	10	3.8	1.4	1.2	.90	.59
20	3.5	14	20	155	45	91	9.5	4.4	1.3	.88	.81	.96
21	3.0	11	12	117	42	99	9.2	4.1	1.3	.74	.78	.89
22	2.7	13	22	83	41	95	9.0	3.7	1.3	1.2	.47	.78
23	2.4	10	13	64	39	105	8.5	3.7	1.5	.85	.31	1.1
24	2.1	9.7	13	55	39	90	8.2	3.7	1.9	0	.43	1.0
25	1.6	9.0	11	50	35	60	8.0	4.2	1.6	0	.31	.79
26	1.4	7.9	11	42	89	50	7.8	3.7	1.1	.07	.48	.81
27	1.4	7.0	10	37	196	40	7.6	3.4	1.3	.37	.58	.77
28	1.3	6.3	10	32	118	35	7.4	3.3	1.7	.77	.49	.41
29	1.3	6.2	9.1	45	------	30	7.2	2.6	1.4	1.5	.14	.33
30	1.1	5.9	8.7	32	------	35	7.0	2.9	1.1	1.7	.14	.60
31	1.0	------	9.4	31	------	50	------	3.4	------	1.2	.72	------
TOTAL	99.25	699.48	327.2	2,527.7	2,485	2,080	396.4	133.4	58.0	25.30	26.21	19.16
MEAN	3.20	23.3	10.6	81.5	88.8	67.1	13.2	4.30	1.93	.82	.85	.64
MAX	25	144	65	532	207	110	30	6.7	3.2	1.7	1.6	1.1
MIN	0	.98	3.9	7.4	30	30	7.0	2.6	1.1	0	.14	.16
AC-FT	197	1,390	649	5,010	4,930	4,130	786	265	115	50	52	38
(a)	149	56	14	1,180	1,500	620	137	336	190	181	188	186

CAL YR 1972 TOTAL 1,576.08 MEAN 4.31 MAX 144 MIN 0 AC-FT 3,130 a --
WTR YR 1973 TOTAL 8,877.10 MEAN 24.3 MAX 532 MIN 0 AC-FT 17,610 a 4,740

PEAK DISCHARGE (BASE, 200 CFS)

DATE	TIME	G.H.	DISCHARGE	DATE	TIME	G.H.	DISCHARGE
11-10	2400	5.77	213	2-10	0030	5.43	265
11-14	1615	5.82	247	2-14	0515	6.01	349
1-16	0830	8.12	684	2-27	1015	5.94	360
1-18	1145	9.14	878	3-3	1300	4.94	216
2-6	1200	5.23	237	3-7	2400	4.87	219

a Diversion, in acre-feet, to City of San Francisco Water System, furnished by city and county of San Francisco.

11162720 COLMA CREEK AT SOUTH SAN FRANCISCO, CALIF.

LOCATION.--Lat 37°39'14", long 122°25'31", in Buri Buri Grant, San Mateo County, on left bank in Orange Memorial Park, 1.0 mile southwest of South San Francisco Post Office.

DRAINAGE AREA.--10.8 sq mi.

PERIOD OF RECORD.--October 1963 to current year.

GAGE.--Water-stage recorder. Datum of gage is 12.53 ft above mean sea level. Recording rain gages at Coast Guard radio station 2.9 miles southwest and on San Bruno Mt. 2.9 miles northwest. Altitude of both sites is 930 ft (from topographic map).

AVERAGE DISCHARGE.--10 years, 7.21 cfs (5,220 acre-ft per year).

EXTREMES.--Current year: Maximum discharge, 2,880 cfs Jan. 16 (gage height, 11.80 ft); minimum daily, 0.60 cfs Oct. 5.
Period of record: Maximum discharge, 2,880 cfs Jan. 16, 1973 (gage height, 11.80 ft); no flow Oct. 5, 26, 1963.

REMARKS.--Records fair. Low flow affected by return flow from urban irrigation. Records of water temperatures and suspended-sediment discharge for the current year are published in Part 2 of this report.

DISCHARGE, IN CUBIC FEET PER SECOND, WATER YEAR OCTOBER 1972 TO SEPTEMBER 1973

DAY	OCT	NOV	DEC	JAN	FEB	MAR	APR	MAY	JUN	JUL	AUG	SEP
1	.75	2.1	1.7	2.1	1.6	8.1	1.6	2.4	2.2	3.3	2.9	2.7
2	1.6	1.6	1.8	2.3	2.7	6.0	1.6	2.9	2.1	2.6	2.3	2.7
3	.97	62	12	2.9	60	57	1.6	3.1	1.8	2.8	2.3	2.7
4	.62	53	12	2.1	42	14	1.8	6.7	2.1	3.0	2.3	2.7
5	.60	3.2	3.1	2.1	23	6.7	1.5	1.8	2.1	2.3	2.2	2.4
6	1.2	2.3	22	2.1	200	50	1.3	1.6	2.2	2.3	2.1	2.1
7	.93	20	34	2.2	59	31	1.5	1.6	2.1	2.6	1.8	2.1
8	.81	2.2	3.3	103	20	14	1.4	2.0	2.1	2.8	1.8	2.1
9	73	17	2.2	129	119	7.2	1.4	2.1	2.3	2.8	2.3	2.1
10	4.8	81	2.1	28	59	23	1.4	2.3	2.3	2.6	2.4	2.1
11	268	15	1.8	105	43	10	1.5	2.3	2.3	3.2	2.1	2.1
12	34	3.4	3.3	29	73	5.2	1.3	2.2	2.3	3.2	2.1	2.1
13	18	186	2.1	12	9.9	4.2	16	2.3	2.3	3.2	2.1	2.1
14	98	89	6.0	7.9	72	3.8	1.3	2.5	2.3	3.0	2.1	2.4
15	42	87	1.9	8.5	18	3.5	1.2	2.4	2.6	2.2	2.1	2.8
16	19	21	5.7	324	11	3.3	1.5	2.2	2.6	2.3	2.1	2.7
17	4.1	8.7	162	116	7.7	3.5	1.4	2.4	2.6	2.2	2.1	2.9
18	2.7	8.9	40	300	5.1	2.8	1.4	2.3	2.6	2.3	2.1	3.1
19	2.7	4.7	29	27	8.1	67	1.4	2.2	2.6	2.3	2.1	4.1
20	2.6	3.6	8.8	15	12	7.9	1.5	2.5	2.6	2.6	2.6	18
21	2.3	3.0	7.3	21	12	24	1.8	2.8	2.8	2.5	2.5	3.2
22	2.1	2.5	15	3.4	15	3.2	1.9	2.4	2.7	2.7	2.1	5.5
23	2.2	2.0	9.8	2.7	19	2.7	2.1	2.7	2.8	2.8	2.1	3.2
24	2.2	1.7	4.3	10	24	2.7	2.5	4.1	2.9	2.6	2.1	4.2
25	1.7	1.8	3.1	6.7	4.2	2.1	2.8	2.0	3.2	2.6	2.1	3.7
26	1.6	1.6	3.0	1.6	60	2.1	2.4	1.6	3.6	2.6	2.1	4.1
27	1.6	1.6	8.1	1.2	136	3.2	2.5	1.6	2.9	2.2	2.4	3.3
28	1.6	1.6	2.3	1.2	21	4.5	2.5	1.9	3.8	2.4	2.8	3.4
29	1.7	1.8	2.1	51	------	2.1	2.6	2.1	3.0	2.6	2.9	4.5
30	2.4	1.8	2.1	8.2	------	45	2.9	2.0	2.9	2.6	3.0	4.2
31	2.1	------	2.1	1.6	------	2.2	------	2.1	------	2.7	2.7	------
TOTAL	597.88	691.1	414.0	1,328.8	1,137.3	422.0	67.6	75.1	76.7	81.9	70.7	105.3
MEAN	19.3	23.0	13.4	42.9	40.6	13.6	2.25	2.42	2.56	2.64	2.28	3.51
MAX	268	186	162	324	200	67	16	6.7	3.8	3.3	3.0	18
MIN	.60	1.6	1.7	1.2	1.6	2.1	1.2	1.6	1.8	2.2	1.8	2.1
AC-FT	1,190	1,370	821	2,640	2,260	837	134	149	152	162	140	209
(a)	4.35	3.20	2.07	5.71	4.42	1.73	.13	.11	0	0	.02	.21
(b)	6.41	6.03	2.50	8.68	7.95	2.62	.02	.15	0	0	.26	.37

CAL YR 1972 TOTAL 2,559.59 MEAN 6.99 MAX 268 MIN .43 AC-FT 5,080
WTR YR 1973 TOTAL 5,068.38 MEAN 13.9 MAX 324 MIN .60 AC-FT 10,050

PEAK DISCHARGE (BASE, 600 CFS)

DATE	TIME	G.H.	DISCHARGE	DATE	TIME	G.H.	DISCHARGE
10-9	1245	6.73	683	1-16	0745	11.80	2,880
10-11	0615	11.08	2,610	1-18	0645	11.40	2,590
10-14	2245	6.85	720	2-4	0630	6.85	720
11-4	0100	6.76	692	2-6	0930	6.77	695
11-10	0145	6.72	680	2-9	2045	9.13	1,610
11-13	2400	7.25	847	2-27	0915	7.33	873
1-8	1430	6.75	689	3-6	0600	6.60	644
1-11	1330	6.63	653				

a Precipitation, in inches, at San Bruno Mt. gage.
b Precipitation, in inches, at Coast Guard radio station gage.

11162800 REDWOOD CREEK AT REDWOOD CITY, CALIF.

LOCATION.--Lat 37°26'58", long 122°13'57", in Pulgas Grant, San Mateo County, at Menlo Country Club, on right bank 200 ft upstream from Alameda de las Pulgas bridge, and 2.5 miles south of Redwood City Old Post Office.

DRAINAGE AREA.--1.82 sq mi.

PERIOD OF RECORD.--September 1959 to current year.

GAGE.--Water-stage recorder. Datum of gage is 83.92 ft above mean sea level.

AVERAGE DISCHARGE.--14 years, 1.05 cfs (761 acre-ft per year).

EXTREMES.--Current year: Maximum discharge, 445 cfs Nov. 15 (gage height, 7.55 ft, from peak-stage indicator), from rating curve extended as explained below; minimum daily, 0.02 cfs for several days.
Period of record: Maximum discharge, 644 cfs Jan. 31, 1963 (gage height, 9.36 ft), from rating curve extended above 180 cfs on basis of slope-area measurement of maximum flow and computation of maximum flow through culvert; maximum gage height, 11.55 ft Nov. 29, 1970 (backwater from culvert trash racks); no flow at times.

REMARKS.--Records good. Low flow at times affected by return flow from urban irrigation.

REVISIONS.--WSP 1929: Drainage area.

DISCHARGE, IN CUBIC FEET PER SECOND, WATER YEAR OCTOBER 1972 TO SEPTEMBER 1973

DAY	OCT	NOV	DEC	JAN	FEB	MAR	APR	MAY	JUN	JUL	AUG	SEP
1	.02	.15	.25	.33	2.1	3.2	.77	.26	.18	.05	.03	.03
2	.02	.09	.24	.33	1.9	2.6	.73	.26	.24	.71	.04	.03
3	.02	.37	.36	.32	3.1	8.9	.62	.29	.21	.05	.04	.03
4	.02	2.9	.51	.31	3.3	4.4	.59	.30	.23	.04	.04	.04
5	.02	.28	.16	.31	2.8	2.6	.65	.31	.20	.05	.04	.05
6	.02	.17	7.3	.30	35	10	.61	.26	.19	.04	.04	.03
7	.02	2.1	2.2	.30	6.6	4.0	.61	.26	.22	.04	.05	.03
8	.03	.39	1.0	8.3	3.8	3.9	.56	.23	.18	.05	.05	.03
9	1.1	.34	.65	36	12	2.5	.59	.26	.17	.04	.05	.02
10	.20	7.2	.59	3.8	12	3.0	.56	.26	.15	.04	.05	.03
11	8.0	7.8	.56	8.5	3.9	2.6	.56	.25	.14	.04	.05	.03
12	.87	.67	.59	3.1	9.6	2.0	.54	.24	.10	.06	.04	.02
13	.15	11	.53	1.5	20	1.8	1.0	.25	.11	.04	.04	.03
14	2.5	20	.50	1.2	12	1.7	.50	.29	.14	.06	.03	.03
15	1.9	45	.50	1.2	3.6	1.7	.49	.26	.12	.05	.03	.03
16	4.3	9.2	.70	65	2.6	1.5	.49	.27	.23	.07	.04	.03
17	.63	2.2	2.4	23	2.3	1.5	.50	.29	.21	.08	.04	.04
18	.28	1.2	1.3	56	2.0	1.5	.53	.38	.13	.08	.04	.03
19	.18	1.3	2.5	6.5	1.8	5.2	.51	.41	.08	.08	.04	.03
20	.12	.65	1.0	3.6	1.6	2.1	.52	.44	.08	.06	.03	.03
21	.09	.53	.60	3.4	1.5	2.4	.49	.45	.08	.07	.04	.03
22	.10	.45	.70	2.6	1.4	1.3	.49	.41	.09	.06	.03	.04
23	.09	.38	.56	2.3	1.4	1.1	.49	.40	.08	.07	.04	.04
24	.08	.34	.48	2.3	2.3	1.0	.42	.51	.07	.07	.05	.05
25	.08	.30	.45	3.4	1.3	.98	.36	.44	.06	.08	.08	.05
26	.10	.30	.40	2.1	21	.95	.36	.39	.07	.08	.07	.06
27	.10	.29	.43	1.9	32	.88	.35	.41	.06	.05	.03	.04
28	.09	.26	.38	1.8	6.3	.83	.37	.37	.07	.05	.04	.03
29	.09	.23	.36	11	------	.83	.47	.34	.06	.05	.03	.03
30	.09	.23	.35	5.4	------	.85	.30	.32	.05	.21	.03	.03
31	.10	------	.34	2.6	------	.79	------	.22	------	.04	.03	------
TOTAL	21.41	116.32	28.89	258.70	209.2	78.61	16.03	10.03	4.00	2.56	1.28	1.02
MEAN	.69	3.88	.93	8.35	7.47	2.54	.53	.32	.13	.083	.041	.034
MAX	8.0	45	7.3	65	35	10	1.0	.51	.24	.71	.08	.06
MIN	.02	.09	.16	.30	1.3	.79	.30	.22	.05	.04	.03	.02
AC-FT	42	231	57	513	415	156	32	20	7.9	5.1	2.5	2.0

CAL YR 1972 TOTAL 209.20 MEAN .57 MAX 45 MIN .02 AC-FT 415
WTR YR 1973 TOTAL 748.05 MEAN 2.05 MAX 65 MIN .02 AC-FT 1,480

PEAK DISCHARGE (BASE, 100 CFS, REVISED)

DATE	TIME	G.H.	DISCHARGE	DATE	TIME	G.H.	DISCHARGE
11-15	1745	7.55	445	2-6	1015	4.21	136
1-9	0800	4.05	125	2-9	2300	4.19	134
1-16	0645	5.89	274	2-13	0100	4.06	125
1-18	0730	4.39	148	2-26	1345	4.36	146

11164500 SAN FRANCISQUITO CREEK AT STANFORD UNIVERSITY, CALIF.

LOCATION.--Lat 37°25'24", long 122°11'18", in San Francisquito Grant, Santa Clara County, at golf course, on right bank 1.1 miles downstream from Los Trancos Creek, and 1.1 miles west of Stanford University Post Office.

DRAINAGE AREA.--37.4 sq mi.

PERIOD OF RECORD.--October 1930 to September 1941, October 1950 to current year. Monthly discharge only for some periods, published in WSP 1315-B.

GAGE.--Water-stage recorder and concrete control. Datum of gage is 115.75 ft above mean sea level.

AVERAGE DISCHARGE.--34 years, 18.3 cfs (13,260 acre-ft per year).

EXTREMES.--Current year: Maximum discharge, 3,390 cfs Jan. 16 (gage height, 7.84 ft, from rating curve extended above 1,800 cfs; minimum daily, 0.05 cfs June 29.
Period of record: Maximum discharge, 5,560 cfs Dec. 22, 1955 (gage height, 13.60 ft); no flow at times.

REMARKS.--Records good. Flow regulated by Searsville Lake 5 miles upstream (capacity, 952 acre-ft). Diversions of about 800 acre-ft each year above station to Los Trancos and Lagunita Canals for irrigation on Stanford University campus below station. Low flow affected by waste water from Stanford Linear Accelerator.

DISCHARGE, IN CUBIC FEET PER SECOND, WATER YEAR OCTOBER 1972 TO SEPTEMBER 1973

DAY	OCT	NOV	DEC	JAN	FEB	MAR	APR	MAY	JUN	JUL	AUG	SEP
1	.28	.52	3.1	7.2	63	139	31	5.0	.23	.13	.24	.51
2	.26	.56	.43	3.5	51	96	26	3.9	.21	.33	.29	.99
3	.26	.52	.36	3.7	74	161	21	3.5	.72	2.8	.29	1.1
4	.19	6.7	.83	3.2	92	176	18	3.2	.76	.29	.18	.69
5	.30	2.1	.60	3.1	65	113	19	2.6	.27	.23	.30	.69
6	.49	.99	32	3.0	479	182	18	1.9	.23	.23	.40	.69
7	.41	3.9	23	2.9	312	119	17	1.6	.53	.15	.52	1.2
8	.80	3.0	15	25	143	159	16	1.6	1.3	.15	.44	2.5
9	1.8	1.3	6.4	296	146	97	15	1.6	1.2	.33	.54	2.5
10	1.8	8.1	3.8	146	372	93	14	1.9	.82	.13	.66	3.0
11	20	68	2.2	122	235	121	12	1.3	.78	.13	.80	3.5
12	2.7	8.1	.32	137	205	75	10	1.5	.88	.19	.82	4.1
13	1.3	30	.23	61	506	59	14	1.4	.68	.28	.59	3.9
14	2.5	246	.21	42	381	56	14	1.2	.59	.25	.50	3.5
15	5.1	359	.29	28	217	40	13	1.1	.66	.22	.37	3.5
16	8.0	238	.44	1,090	139	34	12	.98	.18	.14	.37	3.3
17	3.7	51	5.6	338	103	43	11	2.1	.20	.36	.34	2.8
18	1.3	24	6.0	1,250	85	37	9.3	4.8	.24	.50	.43	3.3
19	.82	17	50	325	70	64	8.8	3.8	.60	.27	.48	2.8
20	.53	13	24	137	59	101	8.2	3.1	.56	.16	.22	3.0
21	.45	11	13	113	44	94	7.3	2.6	.48	.50	.22	3.7
22	.40	11	32	78	40	74	7.0	1.2	.49	.52	.37	3.5
23	.48	10	22	62	41	44	5.7	1.0	.40	.44	.29	4.3
24	.48	7.2	14	56	58	34	3.1	.42	.31	.23	.26	3.0
25	.53	7.2	9.1	63	46	35	3.9	.43	.50	.22	.53	.20
26	.39	9.5	6.4	50	223	32	4.1	.54	.32	.29	.74	.17
27	.47	5.5	5.3	39	550	32	4.1	1.2	.08	.15	.77	.19
28	.45	4.5	4.5	34	317	29	4.7	.34	.07	.23	.56	.14
29	.45	3.7	3.5	87	------	22	3.6	.79	.05	.57	.44	.16
30	.53	3.7	2.7	190	------	18	4.9	.23	.18	.32	.50	.49
31	.51	------	7.0	88	------	40	------	.17	------	.43	.43	------
TOTAL	57.68	1,155.09	294.31	4,883.6	5,116	2,419	355.7	57.00	14.52	11.17	13.89	63.42
MEAN	1.86	38.5	9.49	158	183	78.0	11.9	1.84	.48	.36	.45	2.11
MAX	20	359	50	1,250	550	182	31	5.0	1.3	2.8	.82	4.3
MIN	.19	.52	.21	2.9	40	18	3.1	.17	.05	.13	.18	.14
AC-FT	114	2,290	584	9,690	10,150	4,800	706	113	29	22	28	126

CAL YR 1972 TOTAL 1,799.25 MEAN 4.92 MAX 359 MIN .04 AC-FT 3,570
WTR YR 1973 TOTAL 14,441.38 MEAN 39.6 MAX 1,250 MIN .05 AC-FT 28,640

PEAK DISCHARGE (BASE, 700 CFS)

DATE	TIME	G.H.	DISCHARGE	DATE	TIME	G.H.	DISCHARGE
11-15	2030	4.51	1,080	2-10	0030	4.00	800
1-16	1045	7.84	3,390	2-13	0245	4.25	925
1-18	1245	6.23	2,260	2-27	1530	4.91	1,340
2-6	1145	4.15	875				

11166000 MATADERO CREEK AT PALO ALTO, CALIF.

LOCATION.--Lat 37°25'18", long 122°08'04", in Rincon de San Francisquito Grant, Santa Clara County, on right bank on Ash Street 150 ft upstream from Lambert Avenue Bridge, and 2.1 miles southeast of Palo Alto Post Office.

DRAINAGE AREA.--7.24 sq mi.

PERIOD OF RECORD.--July 1952 to current year.

GAGE.--Water-stage recorder. Datum of gage is 22.07 ft above mean sea level. Prior to Sept. 25, 1958, at site 150 ft downstream at different datum.

AVERAGE DISCHARGE.--21 years, 1.80 cfs (1,300 acre-ft per year).

EXTREMES.--Current year: Maximum discharge, 1,100 cfs Feb. 27 (gage height, 5.57 ft), from rating curve extended as explained below; minimum daily, 0.05 cfs Dec. 31, Jan. 1.
Period of record: Maximum discharge, 1,100 cfs Feb. 27, 1973 (gage height, 5.57 ft), from rating curve extended above 150 cfs on basis of step-backwater computations at gage heights 3.68 and 5.33 ft; maximum gage height, 9.88 ft Dec. 23, 1955, site and datum then in use (backwater from culvert); no flow at times.

REMARKS.--Records good except those above 200 cfs, which are fair. No regulation or diversion above station.

DISCHARGE, IN CUBIC FEET PER SECOND, WATER YEAR OCTOBER 1972 TO SEPTEMBER 1973

DAY	OCT	NOV	DEC	JAN	FEB	MAR	APR	MAY	JUN	JUL	AUG	SEP
1	.12	.14	.16	.05	3.7	12	1.4	.37	.12	.35	.16	.20
2	.11	.48	.15	.08	2.9	8.0	1.4	.34	.15	.35	.18	.18
3	.24	.34	.14	.11	19	28	1.3	.40	.12	.34	.17	.18
4	.27	~~10~~ 11	1.5	.12	19	17	1.3	.38	.12	.36	.21	.18
5	.15	.13	.16	.13	9.3	8.9	1.3	.49	.12	.39	.18	.18
6	.18	.14	11	.15	~~156~~ 220	26	1.3	.30	.11	.40	.16	.20
7	.16	2.0	5.9	.16	24	13	1.3	.27	.11	.38	.18	.25
8	.13	.22	1.7	17	9.4	14	1.3	.32	.40	.37	.16	.33
9	11	1.5	.81	~~67~~ 74	~~23~~ 29	6.7	1.2	.34	.16	.31	.16	.30
10	.72	~~17~~ 20	.60	12	~~46~~ 51	7.7	1.2	.30	.11	.35	.19	.29
11	~~37~~ 46	~~23~~ 27	.47	11	25	6.5	1.0	.78	.10	.45	.20	.30
12	.35	.29	.32	5.4	24	4.7	1.2	.32	.11	.43	.18	.38
13	.32	~~35~~ 39	.30	2.3	~~63~~ 79	4.0	2.8	.22	.13	.34	.16	.27
14	6.8	~~68~~ 79	.22	1.5	25	3.5	1.3	.16	.16	.32	.17	.29
15	3.9	~~68~~ 90	.21	1.7	11	3.2	1.2	.16	.24	.34	.16	.30
16	14	15	1.5	136 187	7.7	3.0	.96	.14	.47	.29	.15	.34
17	2.1	2.9	3.6	~~38~~ 46	5.9	3.1	.83	.14	.40	.33	.16	.42
18	.64	1.1	1.1	~~166~~ 232	4.9	2.9	.69	.16	.30	.31	.17	.42
19	.21	1.5	4.0	16	4.1	18	.85	.15	.20	.38	.18	.44
20	.36	.55	.61	6.9	4.2	7.4	.78	.11	.17	.46	.17	.36
21	.45	.24	.43	8.8	3.4	7.3	.66	.51	.19	.34	.18	.31
22	.51	.23	1.0	4.0	2.9	3.8	.59	.13	.34	.33	.17	.19
23	.27	.10	.29	2.8	2.7	2.9	.54	.14	.36	.32	.23	.20
24	.12	.40	.19	3.3	14	2.6	.56	.11	.35	.31	.24	.20
25	.14	.40	.09	7.8	3.5	2.5	.48	.14	.34	.19	.33	.25
26	.27	.37	.13	2.5	69 88	2.3	.53	.14	.35	.21	.26	.20
27	.43	.23	.56	1.8	~~214~~ 296	2.1	.50	.15	.35	.19	.20	.21
28	.46	.18	.22	1.6	~~40~~ 42	1.9	.55	.12	.35	.37	.24	.17
29	.49	.16	.08	16	------	1.7	.42	.12	.32	.31	.19	.17
30	.28	.15	.06	~~47~~ 57	------	2.7	.41	.16	.36	.16	.19	.17
31	.12	------	.05	6.4	------	1.7	------	.16	------	.19	.18	------
TOTAL	~~82.30~~ 94.30	~~249.75~~ 294.75	37.55	~~583.60~~ 725.60	~~836.6~~ 1030.6	229.1	29.85	7.73	7.11	10.17	5.86	7.88
MEAN	~~2.65~~ 2.95	~~8.33~~ 9.82	1.21	~~18.8~~ 23.4	~~29.9~~ 36.8	7.39	1.00	.25	.24	.33	.19	.26
MAX	~~37~~ 46	~~68~~ 90	11	~~166~~ 232	~~214~~ 296	28	2.8	.78	.47	.46	.33	.44
MIN	.11	.10	.05	.05	2.7	1.7	.41	.11	.10	.16	.15	.17
AC-FT	~~163~~ 181	~~495~~ 585	74	~~1,160~~ 1,440	~~1,660~~ 2040	454	59	15	14	20	12	16

CAL YR 1972 TOTAL 460.39 MEAN 1.26 MAX 68 MIN .05 AC-FT 913
WTR YR 1973 TOTAL ~~2,087.50~~ 2477.50 MEAN ~~5.72~~ 6.79 MAX ~~214~~ 296 MIN .05 AC-FT ~~4,140~~ 4910

PEAK DISCHARGE (BASE, 200 CFS)

DATE	TIME	G.H.	DISCHARGE	DATE	TIME	G.H.	DISCHARGE
10-11	0830	2.24	~~205~~ 305	2-6	1030	3.55	~~466~~ 684
11-15	1730	2.89	~~326~~ 485	2-9	2330	2.24	~~205~~ 305
1-16	0830	3.89	~~529~~ 792	2-13	0230	2.52	~~256~~ 379
1-18	0900	3.40	~~432~~ 637	2-27	1500	5.57	~~1,100~~ 1380
1-30	0300	2.41	~~236~~ 349				

11166480 STEVENS CREEK RESERVOIR NEAR MONTE VISTA, CALIF.

LOCATION.--Lat 37°17'55", long 122°04'34", in NW¼ sec.27, T.7 S., R.2 W., Santa Clara County, at center of dam on Stevens Creek, 2.0 miles southwest of Monte Vista.

DRAINAGE AREA.--17.3 sq mi.

PERIOD OF RECORD.--December 1935 to current year. Monthly contents prior to October 1959 published in WSP 1735.

GAGE.--Nonrecording gage read once daily. Datum of gage is at mean sea level (levels by Santa Clara Valley Water District).

EXTREMES (at 0800).--Current year: Maximum contents observed, 3,570 acre-ft May 9 (elevation, 534.48 ft); minimum observed, 206 acre-ft Oct. 6 (elevation, 470.80 ft).
Period of record: Maximum contents observed, 4,100 acre-ft Dec. 26, 1955 (elevation, 538.61 ft); maximum elevation, 539.70 ft Mar. 16, 1967; no contents at times in most years.

REMARKS.--Reservoir is formed by earthfill dam completed in 1936. Capacity, 3,600 acre-ft between elevations 444.9 (invert of outlet tunnel) and 534.8 ft (crest of spillway). Water released down Stevens Creek for irrigation and ground-water recharge by percolation.

COOPERATION.--Record of contents furnished by Santa Clara Valley Water District.

REVISIONS (WATER YEARS).--WRD Calif. 1970: 1969.

MONTHEND CONTENTS, IN ACRE-FEET (INCLUDING MOMENTARY STORAGE ABOVE SPILLWAY CREST), WATER YEAR OCTOBER 1972 TO SEPTEMBER 1973

Date	Contents
Sept. 30, 1972	230
Oct. 31	275
Nov. 30	1,170
Dec. 31	1,440
Jan. 31, 1973	3,520
Feb. 28	3,520
Mar. 31	3,530
Apr. 30	3,560
May 31	3,280
June 30	2,390
July 31	2,030
Aug. 31	1,640
Sept. 30	1,520

NOTE.--Contents at 0800 on first day of following month.

RESERVOIRS IN GUADALUPE RIVER BASIN, CALIF.

11166670 ALMADEN RESERVOIR.--Lat 37°09'54", long 121°49'39", in San Vicente Grant, Santa Clara County, at center of dam on Alamitos Creek, 0.7 mile southwest of New Almaden, and 7 miles south of Edenvale. Drainage area, 11.9 sq mi. Period of record, January 1936 to current year. Monthly contents prior to October 1959, published in WSP 1735. Nonrecording gage read once daily. Datum of gage is at mean sea level (levels by Santa Clara Valley Water District). Extremes for current year: Maximum contents observed, 1,800 acre-ft Jan. 19 (elevation, 607.35 ft); minimum observed, 96 acre-ft Sept. 30 (elevation, 549.54 ft). Extremes for period of record: Maximum contents observed, 2,150 acre-ft Jan. 31, 1963 (elevation, 610.24 ft, from floodmarks); no contents at times in each year except 1942, 1943, 1962-63, 1966, 1968-70, 1973.

Reservoir is formed by earthfill dam completed in 1936. Capacity, 1,780 acre-ft between elevations 533.1 (invert of outlet tunnel) and 606.9 ft (crest of spillway). Water released down Alamitos Creek for ground-water recharge by percolation and minor irrigation. Up to 100 cfs diverted to Calero Reservoir at times. Record of contents furnished by Santa Clara Valley Water District.

11166740 CALERO RESERVOIR.--Lat 37°11'00", long 121°47'28", in San Vicente Grant, Santa Clara County, at center of dam on Arroyo Calero, 1.7 miles northeast of New Almaden, and 6 miles southeast of Edenvale. Drainage area, 6.96 sq mi. Period of record, January 1936 to current year. Monthly contents prior to October 1959, published in WSP 1735. Nonrecording gage read once daily. Datum of gage is at mean sea level (levels by Santa Clara Valley Water District). Extremes for current year: Maximum contents observed, 10,180 acre-ft Mar. 13 (elevation, 483.54 ft); minimum observed, 529 acre-ft Nov. 13 (elevation, 425.73 ft). Extremes for period of record: Maximum contents observed, 10,520 acre-ft Apr. 7, 1967 (elevation, 485.21 ft); no contents at times in each year except 1942-45, 1963-73.

Reservoir is formed by earthfill dam completed to crest elevation 482.55 ft in 1936 and raised to 483.5 ft in 1962. Capacity, 10,160 acre-ft between elevations 393.7 (center of outlet tunnel) and 483.5 ft (crest of spillway). Water released down Arroyo Calero for ground-water recharge by percolation and minor irrigation. Up to 100 cfs diverted from Almaden Reservoir to Calero Reservoir at times. Record of contents furnished by Santa Clara Valley Water District.

11167370 GUADALUPE RESERVOIR.--Lat 37°11'57", long 121°52'42", in Los Capitancillos Grant, Santa Clara County, at center of dam on Guadalupe Creek, 3.6 miles northwest of New Almaden, and 5.0 miles southeast of Los Gatos. Drainage area, 5.97 sq mi. Period of record, January 1936 to current year. Monthly contents prior to October 1959, published in WSP 1735. Nonrecording gage read once daily. Datum of gage is at mean sea level (levels by Santa Clara Valley Water District). Extremes for current year: Maximum contents observed, 3,740 acre-ft Mar. 22 (elevation, 617.26 ft); no contents Oct. 1-30. Extremes for period of record: Maximum contents observed, 3,740 acre-ft Mar. 22, 1973 (elevation, 617.26 ft); maximum elevation, 619.26 ft, from floodmarks, Feb. 1, 1963; no contents at times in each year except 1941-43, 1962-63, 1966-67.

Reservoir is formed by earthfill dam completed in 1936. Capacity, 3,740 acre-ft between elevations 506.8 (invert of outlet tunnel) and 617.3 ft (crest of spillway). Water released down Guadalupe Creek for irrigation and ground-water recharge by percolation. Record of contents furnished by Santa Clara Valley Water District.

11167950 LAKE ELSMAN.--Lat 37°07'51", long 121°55'47", in SE¼ sec.23, T.9 S., R.1 W., Santa Clara County, at center of Austrian Dam on Los Gatos Creek, and 7.3 miles southeast of Los Gatos. Drainage area, 9.79 sq mi. Period of record, February 1951 to current year. Monthly contents prior to October 1959, published in WSP 1735. Nonrecording gage read once daily. Datum of gage is at mean sea level (levels by San Jose Water Works). Extremes for current year: Maximum contents observed, 6,330 acre-ft Mar. 29, 31 (elevation, 1,112.5 ft); no contents Oct. 31. Extremes for period of record: Maximum contents observed, 6,640 acre-ft Jan. 31, 1963 (elevation, 1,115.1 ft); no contents Nov. 30, 1968, Nov. 5, 1969, Oct. 31, 1972.

Reservoir is formed by earthfill dam completed in 1951; topped by a 2-foot inflatable surcharge dam since 1956. Usable capacity, 6,280 acre-ft between elevations 944 (elevation of outlet gates) and 1,112 ft (top of 2-foot inflatable surcharge dam). Dead storage, 60 acre-ft. Water released down Los Gatos Creek for domestic and industrial use. Record of contents furnished by San Jose Water Works.

11167980 LEXINGTON RESERVOIR.--Lat 37°12'06", long 121°59'17", in SE¼ sec.29, T.8 S., R.1 W., Santa Clara County, at center of dam on Los Gatos Creek, and 1.7 miles south of Los Gatos. Drainage area, 37.0 sq mi. Period of record, December 1952 to current year. Monthly contents prior to October 1959, published in WSP 1735. Nonrecording gage read once daily. Datum of gage is at mean sea level (levels by Santa Clara Valley Water District). Extremes for current year: Maximum contents observed, 20,640 acre-ft Feb. 28 (elevation, 650.95 ft); minimum observed, 1,740 acre-ft Oct. 13 (elevation, 565.00 ft). Extremes for period of record: Maximum contents observed, 23,190 acre-ft Mar. 16, 1967 (elevation, 654.00 ft); no contents at times in each year except 1963, 1966-73.

Reservoir is formed by earthfill dam completed in 1952. Capacity, 20,210 acre-ft between elevations 519 (invert at outlet tunnel) and 649.9 ft (crest of spillway). Dead storage, 31 acre-ft. Water released down Los Gatos Creek for irrigation and ground-water recharge by percolation. Record of contents furnished by Santa Clara Valley Water District.

MONTHEND CONTENTS, IN ACRE-FEET (INCLUDING MOMENTARY STORAGE ABOVE SPILLWAY CREST), WATER YEAR OCTOBER 1972 TO SEPTEMBER 1973

Date	Almaden Reservoir a	Calero Reservoir a	Guadalupe Reservoir a	Lake Elsman b	Lexington Reservoir a
Sept. 30, 1972	158	1,200	0	301	1,790
Oct. 31	175	764	35	0	1,780
Nov. 30	394	1,170	410	684	3,800
Dec. 31	420	1,140	563	930	4,400
Jan. 31, 1973	472	6,280	2,910	4,430	12,420
Feb. 28	1,740	9,850	3,540	6,210	20,470
Mar. 31	1,730	10,070	3,720	6,330	20,320
Apr. 30	1,750	9,980	3,600	6,190	19,400
May 31	1,730	9,200	3,350	5,360	18,680
June 30	1,620	7,770	3,050	4,310	17,420
July 31	520	7,240	2,790	3,010	16,460
Aug. 31	120	6,250	2,350	1,740	15,180
Sept. 30	96	4,580	1,920	445	14,060

a Contents at 0800 on first day of following month.
b Contents at 0800 on last day of month.

11167700 ROSS CREEK BELOW JARVIS ROAD, AT SAN JOSE, CALIF.

LOCATION.--Lat 37°15'48", long 121°53'08", in San Juan Bautista Grant, Santa Clara County, on right bank at south city limits of San Jose, 100 ft upstream from Cherry Avenue, 1,400 ft downstream from Jarvis Road bridge, and 0.5 mile upstream from mouth.

DRAINAGE AREA.--7.64 sq mi.

PERIOD OF RECORD.--October 1972 to September 1973. September 1956 to September 1972 in files of Santa Clara Valley Water District.

GAGE.--Water-stage recorder. Altitude of gage is 165 ft (from topographic map).

EXTREMES.--Current year: Maximum discharge, 581 cfs Jan. 16 (gage height, 6.62 ft); no flow at times.

REMARKS.--Records good. Water imported from South Bay Aqueduct and released into creek 3.4 miles above station totaled 1,370 acre-ft for the current year. During periods of high flows, no water imported. Records of chemical analyses and suspended-sediment discharge for the current year are published in Part 2 of this report.

COOPERATION.--Computations of daily discharges for period July 12 to Sept. 30 furnished by Santa Clara Valley Water District and reviewed by Geological Survey.

DISCHARGE, IN CUBIC FEET PER SECOND, WATER YEAR OCTOBER 1972 TO SEPTEMBER 1973

DAY	OCT	NOV	DEC	JAN	FEB	MAR	APR	MAY	JUN	JUL	AUG	SEP
1	0	1.0	2.5	1.9	.81	9.8	0	.54	.04	.37	.40	.50
2	0	.83	2.5	2.0	.54	5.7	0	.62	.10	.36	.51	.48
3	0	2.6	2.5	1.8	69	15	0	.54	.12	.34	.58	.47
4	0	24	6.7	1.8	29	22	0	.53	.08	.38	.59	.54
5	0	.50	2.2	1.8	13	5.7	0	.59	.04	.31	.63	.58
6	0	.43	18	1.8	135	16	0	.46	.01	.41	.93	.54
7	0	3.9	7.4	1.8	28	7.7	0	.38	0	.35	.83	.64
8	0	0	3.7	26	9.6	8.0	0	.38	.12	.36	.58	.53
9	2.5	0	2.5	74	51	3.0	0	.41	.54	.38	.44	.50
10	1.0	22	2.3	4.5	104	3.1	0	.40	.50	.37	.53	.49
11	.50	27	2.1	3.7	62	2.4	0	.45	.44	.34	.47	.42
12	1.5	0	2.0	.21	29	1.7	1.1	.24	.41	.37	.44	.45
13	.50	67	1.9	0	30	1.3	0	.17	.42	.40	.46	.52
14	7.0	59	1.8	0	27	1.1	0	.11	.46	.43	.59	.85
15	4.0	62	1.7	2.3	9.4	.82	0	.32	.47	.33	.54	.85
16	6.0	7.4	1.7	167	6.4	.62	0	.10	.47	.37	.58	.80
17	.50	.52	2.6	66	5.1	.58	.21	.13	.43	.42	.55	.85
18	0	0	1.5	116	4.2	.52	1.2	.13	.49	.49	.46	.80
19	0	.05	1.6	14	3.0	37	1.1	.07	.46	.43	.47	.84
20	0	0	1.4	5.5	2.4	7.5	1.1	.10	.48	.43	.45	.82
21	0	.11	1.4	3.6	1.6	5.5	1.2	.08	.49	.42	.59	.82
22	0	1.4	2.8	1.5	1.2	1.3	1.2	.04	.41	.46	.57	.85
23	0	1.3	1.4	.80	1.1	.96	1.4	.03	.46	.41	.57	.80
24	0	.66	1.7	.66	21	.67	1.3	.09	.41	.44	.57	.82
25	0	1.3	1.4	8.1	1.6	.53	1.3	.11	.42	.46	.63	1.0
26	0	1.4	1.5	.30	54	.45	1.3	.08	.41	.40	.59	1.1
27	0	1.3	3.9	.03	81	.31	1.2	.05	.42	.43	.51	.95
28	0	1.0	1.8	0	23	.18	1.0	.07	.46	.48	.52	.98
29	0	.82	1.9	28	------	.10	1.0	.06	.41	.60	.51	1.0
30	.53	.39	1.9	17	------	.76	.87	.05	.34	.64	.48	1.0
31	1.1	------	1.8	1.7	------	.09	------	0	------	.37	.48	------
TOTAL	25.13	287.91	90.1	553.80	802.95	160.39	16.48	7.33	10.31	12.75	17.05	21.79
MEAN	.81	9.60	2.91	17.9	28.7	5.17	.55	.24	.34	.41	.55	.73
MAX	7.0	67	18	167	135	37	1.4	.62	.54	.64	.93	1.1
MIN	0	0	1.4	0	.54	.09	0	0	0	.31	.40	.42
AC-FT	50	571	179	1,100	1,590	318	33	15	20	25	34	43

WTR YR 1973 TOTAL 2,005.99 MEAN 5.50 MAX 167 MIN 0 AC-FT 3,980

PEAK DISCHARGE (BASE, 300 CFS)

DATE	TIME	G.H.	DISCHARGE	DATE	TIME	G.H.	DISCHARGE
11-11	0005	5.63	322	2-3	1920	5.88	380
11-15	1730	6.22	465	2-6	0615	5.84	370
1-16	0735	6.62	581	2-9	2300	6.53	554
1-18	0820	6.48	539	2-27	1040	5.61	317

11169000 GUADALUPE RIVER AT SAN JOSE, CALIF.

LOCATION.--Lat 37°20'04", long 121°53'54", Santa Clara County, on right bank at San Jose, 100 ft downstream from Los Gatos Creek.

DRAINAGE AREA.--144 sq mi.

PERIOD OF RECORD.--October 1929 to current year. Monthly discharge only for some periods, published in WSP 1315-B. Prior to 1945, published as Guadalupe Creek at San Jose.

GAGE.--Water-stage recorder and concrete control. Datum of gage is 72.00 ft above mean sea level (levels by Corps of Engineers).

EXTREMES.--Current year: Maximum discharge, 4,380 cfs Jan. 16 (gage height, 8.31 ft); minimum daily, 0.05 cfs July 31.
Period of record: Maximum discharge, 9,150 cfs Apr. 2, 1958 (gage height, 16.55 ft); no flow many days in most years.

REMARKS.--Records good except those for period of no gage-height record, which are poor. Flow regulated by Lexington Reservoir 12 miles upstream and Calero, Almaden, Guadalupe Reservoirs, and Lake Elsman given elsewhere in this report, with water released during summer for percolation in spreading basins on tributaries. During current year, 16,050 acre-ft was diverted by San Jose Water Works for urban use and 887 acre-ft was diverted into Alamitos percolation ponds from Coyote Creek basin.

REVISIONS (WATER YEARS).--WSP 1315-B: 1943(M), 1945(M), 1949(M).

DISCHARGE, IN CUBIC FEET PER SECOND, WATER YEAR OCTOBER 1972 TO SEPTEMBER 1973

DAY	OCT	NOV	DEC	JAN	FEB	MAR	APR	MAY	JUN	JUL	AUG	SEP
1	4.3	6.9	7.0	8.0	58	594	43	.71	7.3	5.1	.43	5.4
2	5.1	6.9	8.0	9.0	27	370	41	.64	5.3	3.6	.31	4.2
3	4.0	7.7	10	9.0	359	398	41	1.1	9.5	3.2	.86	4.6
4	3.9	174	15	6.8	333	423	33	.92	4.5	4.1	.79	1.0
5	3.8	12	10	6.8	154	364	29	2.1	1.2	3.3	.96	.41
6	5.6	9.7	80	6.8	1,120	408	27	3.3	1.3	2.1	1.5	.43
7	4.6	16	40	6.6	531	326	26	3.3	1.2	4.1	1.5	1.0
8	4.4	8.2	25	154	341	296	26	2.3	1.0	5.5	1.6	3.4
9	52	6.8	20	568	350	252	24	2.1	1.1	4.2	.64	1.6
10	33	173	14	150	1,220	205	22	2.2	1.0	5.8	.66	.33
11	11	345	12	56	1,100	215	16	1.6	1.0	4.7	1.2	2.0
12	29	8.5	10	32	692	203	4.0	1.6	2.0	3.9	.58	3.7
13	16	502	10	9.5	1,290	114	2.5	1.4	1.7	5.2	.72	6.4
14	134	679	9.0	7.4	1,060	131	7.7	3.4	1.2	3.1	.83	1.5
15	64	523	8.0	7.3	770	120	12	3.5	1.1	4.9	1.4	.37
16	116	209	8.0	1,610	574	110	15	2.7	2.2	7.5	1.4	3.3
17	47	28	14	386	468	118	13	2.3	3.5	8.4	2.9	.85
18	23	22	10	1,200	460	104	11	1.4	2.5	6.3	.89	.31
19	9.1	19	10	414	395	237	10	1.0	.94	9.3	.44	.37
20	7.9	16	10	183	359	308	8.6	.68	1.3	3.2	.42	.41
21	6.6	13	10	115	254	189	7.7	.57	2.4	.81	.52	.80
22	5.1	11	12	75	145	132	7.9	.42	2.7	3.2	.50	.48
23	8.3	11	7.0	50	126	107	5.0	.33	2.7	4.7	.51	.35
24	7.8	10	7.0	16	242	92	2.9	1.6	1.4	3.7	2.2	.46
25	7.0	9.8	7.0	28	187	75	1.4	2.8	.25	4.7	3.7	3.6
26	9.8	8.2	8.0	34	502	67	.76	2.8	2.9	3.7	4.0	4.9
27	9.7	7.2	10	22	1,030	61	.64	1.9	4.5	2.3	2.6	.71
28	9.3	6.8	8.0	18	1,120	54	1.2	2.2	4.9	.56	.59	.19
29	7.0	6.6	9.0	126	------	50	1.5	2.9	4.9	.23	3.2	.29
30	6.8	6.6	9.0	304	------	52	.48	4.9	5.1	.08	1.4	.25
31	6.8	------	8.0	110	------	47	------	4.6	------	.05	4.9	------
TOTAL	661.9	2,862.9	425.0	5,728.2	15,267	6,222	441.28	63.27	82.59	121.53	44.15	53.61
MEAN	21.4	95.4	13.7	185	545	201	14.7	2.04	2.75	3.92	1.42	1.79
MAX	134	679	80	1,610	1,290	594	43	4.9	9.5	9.3	4.9	6.4
MIN	3.8	6.6	7.0	6.6	27	47	.48	.33	.25	.05	.31	.19
AC-FT	1,310	5,680	843	11,360	30,280	12,340	875	125	164	241	88	106

CAL YR 1972 TOTAL 4,920.77 MEAN 13.4 MAX 679 MIN .06 AC-FT 9,760
WTR YR 1973 TOTAL 31,973.43 MEAN 87.6 MAX 1,610 MIN .05 AC-FT 63,420

NOTE.--No gage-height record Dec. 1 to Jan. 3.

11169500 SARATOGA CREEK AT SARATOGA, CALIF.

LOCATION.--Lat 37°15'16", long 122°02'18", in Quito Grant, Santa Clara County, on right bank on upstream side of private road bridge, 0.5 mile southwest of Saratoga, and 0.7 mile downstream from diversion dam.

DRAINAGE AREA.--9.22 sq mi.

PERIOD OF RECORD.--October 1933 to current year. Prior to October 1951, published as Campbell Creek at Saratoga.

GAGE.--Water-stage recorder and concrete control. Altitude of gage is 500 ft (from topographic map). Prior to Dec. 6, 1968, at site 40 ft downstream at different datum.

AVERAGE DISCHARGE (adjusted for diversion).--40 years, 9.96 cfs (7,220 acre-ft per year).

EXTREMES.--Current year: Maximum discharge, 1,580 cfs Jan. 16 (gage height, 6.03 ft), from rating curve extended above 330 cfs; minimum daily, 0.03 cfs May 18.
Period of record: Maximum discharge, 2,730 cfs Dec. 22, 1955 (gage height, 6.40 ft, site and datum then in use), from rating curve extended above 510 cfs on basis of slope-area measurement of maximum flow; no flow at times.

REMARKS.--Records good. Water is diverted for municipal use by San Jose Water Works at diversion dam above station. Records of chemical analyses for the current year are published in Part 2 of this report.

REVISIONS (WATER YEARS).--WSP 1445: 1940, 1952(M). WSP 1929: Drainage area.

DISCHARGE, IN CUBIC FEET PER SECOND, WATER YEAR OCTOBER 1972 TO SEPTEMBER 1973

DAY	OCT	NOV	DEC	JAN	FEB	MAR	APR	MAY	JUN	JUL	AUG	SEP
1	.35	.74	.45	.59	20	96	14	2.7	.13	.31	.21	.12
2	.38	.74	.48	.56	18	79	13	2.1	.13	.36	.17	.13
3	.36	.78	.51	.56	43	79	14	2.6	.13	.29	.18	.14
4	.34	2.2	.68	.50	95	58	11	2.6	.11	.23	.24	.14
5	.39	1.1	.55	.52	76	49	9.7	2.0	.13	.25	.21	.12
6	.37	.96	9.5	.50	225	67	9.4	1.4	.15	.27	.23	.13
7	.32	1.5	4.6	.44	151	52	8.5	1.2	.16	.25	.20	.08
8	.31	1.1	3.3	4.6	91	43	7.9	.65	.19	.46	.24	.08
9	.56	.96	1.5	88	103	38	7.3	.58	.20	.27	.20	.08
10	.60	6.2	1.3	38	201	37	6.7	.75	.16	.22	.19	.08
11	3.1	15	1.1	23	206	33	5.7	.50	.29	.26	.18	.20
12	1.2	5.3	.95	19	155	28	5.7	.87	.20	.26	.16	.16
13	.96	47	.79	16	158	28	6.2	1.8	.20	.26	.20	.13
14	1.6	69	.70	10	144	28	5.3	1.6	.18	.26	.14	.16
15	4.2	92	.64	7.8	105	24	5.0	1.4	.23	.25	.17	.16
16	2.6	46	.69	418	81	24	5.0	.88	.29	.25	.15	.17
17	2.4	17	.85	160	61	24	4.3	.09	.35	.27	.15	.15
18	1.6	9.9	.55	539	48	22	4.8	.03	.30	.42	.14	.12
19	1.3	7.0	.68	141	45	35	4.3	.06	.30	.36	.14	.11
20	1.0	5.2	.56	80	39	30	3.5	.12	.35	.24	.13	.11
21	.92	3.0	.65	61	33	43	3.1	.14	.37	.26	.15	.12
22	.87	.73	.74	39	28	34	2.3	.24	.52	.36	.13	.11
23	.83	.33	.53	28	25	27	2.2	.52	.37	.34	.15	.11
24	.78	.30	.51	25	39	23	2.3	.34	.36	.36	.13	.15
25	.74	.42	.54	18	38	22	2.9	.06	.42	.30	.17	.26
26	.74	.30	.49	14	72	20	2.0	.08	1.0	.27	.16	.09
27	.74	.36	.48	11	214	18	3.3	.09	.41	.26	.12	.08
28	.74	.36	.51	10	188	16	4.8	.06	.38	.31	.13	.07
29	.74	.39	.55	27	------	14	4.1	.07	.37	.25	.09	.07
30	.74	.36	.55	36	------	14	2.8	.18	.30	.21	.08	.19
31	.74	------	.55	25	------	14	------	.21	------	.18	.10	------
TOTAL	32.52	336.23	36.48	1,842.07	2,702	1,119	181.1	25.92	8.68	8.84	5.04	3.82
MEAN	1.05	11.2	1.18	59.4	96.5	36.1	6.04	.84	.29	.29	.16	.13
MAX	4.2	92	9.5	539	225	96	14	2.7	1.0	.46	.24	.26
MIN	.31	.30	.45	.44	18	14	2.0	.03	.11	.18	.08	.07
AC-FT	65	667	72	3,650	5,360	2,220	359	51	17	18	10.0	7.6
(a)	0	66	180	115	87	233	326	323	240	181	125	46

CAL YR 1972 TOTAL 507.96 MEAN 1.39 MAX 92 MIN .03 AC-FT 1,010
WTR YR 1973 TOTAL 6,301.70 MEAN 17.3 MAX 539 MIN .03 AC-FT 12,500

PEAK DISCHARGE (BASE, 110 CFS)

DATE	TIME	G.H.	DISCHARGE	DATE	TIME	G.H.	DISCHARGE
11-15	1730	4.37	294	2-4	0900	3.89	147
1-9	1100	3.96	165	2-6	1315	4.51	350
1-16	0900	6.03	1,580	2-10	2100	4.59	386
1-18	0815	5.53	1,030	2-27	1530	4.81	501

a Diversion, in acre-feet, furnished by San Jose Water Works.

11169580 CALABAZAS CREEK TRIBUTARY AT MT. EDEN ROAD, NEAR SARATOGA, CALIF.

LOCATION.--Lat 37°16'09", long 122°03'36", in NE¼NE¼ sec.3, T.8 S., R.2 W., Santa Clara County, on right bank at upstream side of culvert on Mt. Eden Road, 750 ft upstream from mouth, and 1.8 miles northwest of Saratoga Post Office.

DRAINAGE AREA.--0.37 sq mi.

PERIOD OF RECORD.--October 1972 to September 1973.

GAGE.--Water-stage recorder and concrete control. Altitude of gage is 600 ft (from topographic map). Recording rain gage at Garrod Ranch 0.5 mile north of gage. Altitude of gage is 950 ft (from topographic map).

EXTREMES.--Current year: Maximum discharge, 109 cfs Jan. 16 (gage height, 4.29 ft); no flow many days.

REMARKS.--Records good. No regulation or diversion above station. Records of water temperatures and total-sediment discharge for the current year are published in Part 2 of this report.

DISCHARGE, IN CUBIC FEET PER SECOND, WATER YEAR OCTOBER 1972 TO SEPTEMBER 1973

DAY	OCT	NOV	DEC	JAN	FEB	MAR	APR	MAY	JUN	JUL	AUG	SEP
1	0	0	.06	.09	.15	1.6	.11	.03	.02	0		
2	0	0	.06	.10	.15	.80	.10	.03	.03	.02		
3	0	0	.05	.07	1.8	1.3	.09	.03	.03	.02		
4	0	.01	.06	.06	3.9	1.7	.09	.03	.02	.02		
5	0	.01	.07	.05	1.1	.78	.09	.03	.02	.02		
6	0	.01	.47	.05	16	2.7	.09	.02	.02	.01		
7	0	.01	.28	.05	2.9	.70	.08	.02	.03	.01		
8	0	.01	.23	.51	.94	.49	.07	.02	.03	.01		
9	.01	.01	.13	13	5.8	.33	.08	.02	.03	.01		
10	.02	.27	.08	1.2	15	.31	.07	.02	.03	.01		
11	.02	.22	.10	.52	6.4	.25	.07	.03	.02	.01		
12	0	.02	.08	.38	3.2	.17	.06	.04	.02	0		
13	0	2.8	.08	.23	4.8	.17	.07	.04	.02	0		
14	.01	3.7	.07	.15	3.2	.14	.05	.03	.02	0		
15	.06	11	.06	.18	1.1	.13	.05	.03	.02	0		
16	.06	3.9	.05	22	.70	.13	.05	.03	.01	0		
17	.03	.81	.08	6.3	.52	.13	.05	.03	.01	0		
18	.02	.45	.06	22	.45	.13	.05	.03	.01	0		
19	.02	.38	.08	1.6	.38	3.1	.05	.03	.01	0		
20	.01	.32	.08	.70	.32	1.1	.04	.03	.01	0		
21	.01	.27	.08	.48	.27	.85	.04	.03	.01	0		
22	.01	.19	.12	.36	.27	.43	.04	.02	.01	0		
23	.01	.10	.08	.22	.27	.25	.04	.03	.01	0		
24	0	.10	.08	.16	3.3	.20	.04	.03	.01	0		
25	0	.10	.08	.19	.61	.17	.04	.03	.01	0		
26	0	.08	.09	.10	7.6	.15	.04	.02	.01	0		
27	0	.08	.11	.10	21	.17	.04	.02	.01	0		
28	0	.08	.12	.10	8.5	.14	.04	.02	.01	0		
29	0	.06	.10	.52	------	.14	.03	.02	0	0		
30	0	.06	.08	.94	------	.14	.03	.02	0	0		
31	0	------	.08	.27	------	.13	------	.02	------	0		------
TOTAL	.29	25.05	3.25	72.68	110.63	18.93	1.79	.83	.49	.14	0	0
MEAN	.009	.84	.10	2.34	3.95	.61	.060	.027	.016	.005	0	0
MAX	.06	11	.47	22	21	3.1	.11	.04	.03	.02	0	0
MIN	0	0	.05	.05	.15	.13	.03	.02	0	0	0	0
AC-FT	.6	50	6.4	144	219	38	3.6	1.6	1.0	.3	0	0
(a)	--	7.63	1.51	10.45	13.85	3.53	0	0	0	0	0	0

WTR YR 1973 TOTAL 234.08 MEAN .64 MAX 22 MIN 0 AC-FT 464

PEAK DISCHARGE (BASE, 20 CFS)

DATE	TIME	G.H.	DISCHARGE	DATE	TIME	G.H.	DISCHARGE
11-15	1630	3.37	50	2-6	1020	3.20	40
1-9	1010	3.22	41	2-9	2150	3.49	57
1-16	0750	4.29	109	2-24	0840	2.92	23
1-18	0755	3.64	66	2-27	1505	4.24	106

a Precipitation, in inches, at Garrod Ranch gage.

11169600 PROSPECT CREEK AT SARATOGA GOLF COURSE, NEAR SARATOGA, CALIF.

LOCATION.--Lat 37°17'09", long 122°03'14", in NE¼NW¼ sec.35, T.7 S., R.2 W., Santa Clara County, on left bank 60 ft upstream from culvert at Saratoga Golf Course, 0.2 mile downstream from small right-bank tributary, and 2.2 miles northwest of Saratoga Post Office.

DRAINAGE AREA.--0.27 sq mi.

PERIOD OF RECORD.--October 1972 to September 1973.

GAGE.--Water-stage recorder and concrete control. Altitude of gage is 600 ft (from topographic map).

EXTREMES.--Current year: Maximum discharge, 42 cfs Jan. 16 (gage height, 4.76 ft); no flow for several months.

REMARKS.--Records good. No regulation or diversion above station. Records of water temperatures and total-sediment discharge for the current year are published in Part 2 of this report.

DISCHARGE, IN CUBIC FEET PER SECOND, WATER YEAR OCTOBER 1972 TO SEPTEMBER 1973

DAY	OCT	NOV	DEC	JAN	FEB	MAR	APR	MAY	JUN	JUL	AUG	SEP
1		0		0	.20	1.1	.11	.01				
2		0		0	.13	.60	.08	.01				
3		0		0	1.1	.60	.08	.01				
4		0		0	2.2	.43	.08	.01				
5		0		0	1.2	.30	.07	.01				
6		0		0	5.5	.60	.06	0				
7		0		0	2.0	.39	.05	.01				
8		0		.02	.92	.33	.06	0				
9		0		1.2	2.8	.27	.05	0				
10		0		.45	5.9	.25	.05	0				
11		0		.20	4.2	.23	.04	0				
12		0		.13	2.0	.18	.05	0				
13		.29		.09	3.0	.16	.04	0				
14		.56		.07	2.4	.16	.04	0				
15		2.7		.06	1.8	.20	.05	0				
16		.44		7.5	1.4	.20	.04	0				
17		.04		2.6	1.1	.16	.04	0				
18		.02		8.4	.92	.16	.03	0				
19		.02		2.1	.70	.70	.03	0				
20		.01		1.3	.70	.81	.02	0				
21		.01		.77	.60	.48	.02	0				
22		.01		.34	.51	.39	.02	0				
23		0		.14	.51	.32	.02	0				
24		0		.06	1.1	.27	.02	0				
25		0		.06	.51	.25	.02	0				
26		0		.05	2.6	.23	.01	0				
27		0		.04	6.4	.16	.01	0				
28		0		.04	2.2	.15	.01	0				
29		0		.20	------	.15	.01	0				
30		0		.92	------	.13	.01	0				
31		------		.30	------	.13	------	0	------			------
TOTAL	0	4.10	0	27.04	54.60	10.49	1.22	.06	0	0	0	0
MEAN	0	.14	0	.87	1.95	.34	.041	.002	0	0	0	0
MAX	0	2.7	0	8.4	6.4	1.1	.11	.01	0	0	0	0
MIN	0	0	0	0	.13	.13	.01	0	0	0	0	0
AC-FT	0	8.1	0	54	108	21	2.4	.1	0	0	0	0

WTR YR 1973 TOTAL 97.51 MEAN .27 MAX 8.4 MIN 0 AC-FT 193

PEAK DISCHARGE (BASE, 10 CFS)

DATE	TIME	G.H.	DISCHARGE	DATE	TIME	G.H.	DISCHARGE
11-15	1615	4.43	18	2-6	0950	4.36	18
1-16	0755	4.76	42	2-9	2150	4.55	29
1-18	0740	4.65	35	2-27	1500	4.44	22

11169800 COYOTE CREEK NEAR GILROY, CALIF.

LOCATION.--Lat 37°04'40", long 121°29'36", in NE¼SE¼ sec.11, T.10 S., R.4 E., Santa Clara County, on left bank 0.7 mile downstream from Bear Creek, 5.0 miles upstream from Coyote Creek Dam, and 6.4 miles northeast of Gilroy.

DRAINAGE AREA.--109 sq mi.

PERIOD OF RECORD.--October 1960 to current year.

GAGE.--Water-stage recorder. Altitude of gage is 790 ft (from topographic map). Prior to Nov. 14, 1963, at site 0.4 mile downstream at different datum.

AVERAGE DISCHARGE.--13 years, 46.2 cfs (33,470 acre-ft per year).

EXTREMES.--Current year: Maximum discharge, 4,960 cfs Jan. 9 (gage height, 10.30 ft); no flow many days. Period of record: Maximum discharge, 10,100 cfs Jan. 31, 1963 (gage height, 12.60 ft, site and datum then in use), from rating curve extended above 3,200 cfs on basis of slope-area measurement of maximum flow; no flow at times in each year.

REMARKS.--Records good. No regulation or diversion above station. Records of water temperatures and suspended-sediment discharge for the current year are published in Part 2 of this report.

DISCHARGE, IN CUBIC FEET PER SECOND, WATER YEAR OCTOBER 1972 TO SEPTEMBER 1973

DAY	OCT	NOV	DEC	JAN	FEB	MAR	APR	MAY	JUN	JUL	AUG	SEP
1		0	4.3	5.1	102	373	61	15	3.6	.57		
2		0	3.9	4.8	82	250	54	14	3.4	.49		
3		0	3.9	4.7	75	215	49	13	3.2	.49		
4		0	4.4	4.5	118	215	46	13	3.0	.42		
5		0	4.6	4.2	155	173	43	13	2.7	.36		
6		0	11	4.0	1,060	202	41	12	2.3	.36		
7		0	20	3.8	1,470	190	39	12	2.1	.36		
8		0	16	7.9	544	209	36	11	1.8	.31		
9		0	11	1,420	332	172	35	10	1.6	.27		
10		0	9.0	552	1,370	151	34	9.8	1.6	.22		
11		0	6.8	180	1,690	152	32	9.1	1.6	.18		
12		0	6.2	190	1,040	126	30	8.5	1.8	.15		
13		0	5.9	120	1,380	108	41	8.0	1.6	.12		
14		694	5.1	82	950	96	46	7.7	1.6	.12		
15		676	5.1	61	664	85	33	7.3	1.8	.12		
16		548	4.8	1,150	426	77	30	6.7	2.0	.12		
17		211	6.2	855	299	71	28	6.2	1.8	.09		
18		83	15	885	220	66	26	5.7	1.8	.09		
19		42	17	596	173	80	25	5.3	1.6	.06		
20		26	14	258	140	226	24	5.2	1.6	.06		
21		18	11	176	118	155	23	5.1	1.6	.04		
22		14	10	119	100	176	22	5.1	1.3	.04		
23		11	9.6	85	87	137	21	4.9	1.2	.02		
24		8.9	8.8	65	98	114	20	4.9	1.1	.02		
25		7.6	7.8	64	92	102	19	5.0	.97	.02		
26		6.8	6.8	56	121	94	18	4.7	.81	0		
27		5.8	6.5	44	448	86	17	4.3	.68	0		
28		5.1	6.8	39	760	78	17	4.1	.63	0		
29		4.5	6.2	38	------	69	16	3.7	.66	0		
30		4.3	5.4	221	------	66	16	3.5	.57	0		
31		------	5.1	145	------	76	------	3.6	------	0		------
TOTAL	0	2,366.0	258.2	7,440.0	14,114	4,390	942	241.4	52.02	5.10	0	0
MEAN	0	78.9	8.33	240	504	142	31.4	7.79	1.73	.16	0	0
MAX	0	694	20	1,420	1,690	373	61	15	3.6	.57	0	0
MIN	0	0	3.9	3.8	75	66	16	3.5	.57	0	0	0
AC-FT	0	4,690	512	14,760	28,000	8,710	1,870	479	103	10	0	0

CAL YR 1972 TOTAL 3,587.53 MEAN 9.80 MAX 694 MIN 0 AC-FT 7,120
WTR YR 1973 TOTAL 29,808.72 MEAN 81.7 MAX 1,690 MIN 0 AC-FT 59,130

PEAK DISCHARGE (BASE, 1,000 CFS)

DATE	TIME	G.H.	DISCHARGE	DATE	TIME	G.H.	DISCHARGE
11-14	2100	7.49	2,030	2-6	2130	8.30	2,270
1-9	1715	10.30	4,960	2-10	0345	8.50	2,430
1-16	1330	9.34	3,160	2-13	0615	7.92	1,970
1-18	1500	7.50	1,680	2-28	0145	6.69	1,150

RESERVOIRS IN COYOTE CREEK BASIN, CALIF.

11169850 COYOTE LAKE.--Lat 37°07'06", long 121°32'55", in SE¼ sec.29, T.9 S., R.4 E., Santa Clara County, at center of dam on Coyote Creek, 3.8 miles northeast of San Martin. Drainage area, 120 sq mi. Period of record, February 1936 to current year. Monthly contents prior to October 1959, published in WSP 1735. Nonrecording gage read once daily. Datum of gage is at mean sea level (levels by Santa Clara Valley Water District). Extremes for current year: Maximum contents observed, 24,140 acre-ft Mar. 22 (elevation, 777.97 ft); minimum observed, 2,180 acre-ft Nov. 13 (elevation, 725.78 ft). Extremes for period of record: Maximum contents observed, 28,120 acre-ft Dec. 8, 1950 (elevation, 782.5 ft); no contents at times.

Reservoir is formed by rock- and earthfill dam completed in 1936. Capacity, 23,700 acre-ft between elevations 693.3 (invert of outlet tunnel) and 777.2 ft (crest of spillway). Water released down Coyote Creek for storage in Anderson Lake. Record of contents furnished by Santa Clara Valley Water District.

11169920 ANDERSON LAKE.--Lat 37°09'56", long 121°37'42", in southeast corner of La Laguna Seca Grant, Santa Clara County, at center of dam on Coyote Creek, 2.5 miles northeast of Madrone. Drainage area, 195 sq mi. Period of record, December 1950 to current year. Monthly contents prior to October 1959, published in WSP 1735. Nonrecording gage read once daily. Datum of gage is at mean sea level (levels by Santa Clara Valley Water District). Extremes for current year: Maximum contents observed, 76,580 acre-ft Apr. 18 (elevation, 612.40 ft); minimum observed, 18,460 acre-ft Nov. 13 (elevation, 533.63 ft). Extremes for period of record: Maximum contents, 95,990 acre-ft Apr. 3, 1958 (elevation, 628.67 ft, from floodmarks); no contents at times in 1960-62.

Reservoir is formed by earth- and rockfill dam completed in 1950. Capacity, 91,280 acre-ft between elevations 439 (invert of outlet tunnel) and 625.0 ft (crest of spillway). Water released down Coyote Creek for irrigation and ground-water recharge by percolation. Record of contents furnished by Santa Clara Valley Water District.

MONTHEND CONTENTS, IN ACRE-FEET (INCLUDING MOMENTARY STORAGE ABOVE SPILLWAY CREST), WATER YEAR OCTOBER 1972 TO SEPTEMBER 1973

Date	Coyote Lake	Anderson Lake
Sept. 30, 1972.....	3,300	21,800
Oct. 31.....	2,680	19,030
Nov. 30.....	5,940	19,060
Dec. 31.....	5,590	19,360
Jan. 31, 1973.....	16,990	22,270
Feb. 28.....	20,950	65,150
Mar. 31.....	23,910	75,240
Apr. 30.....	23,740	75,850
May 31.....	23,590	72,960
June 30.....	22,870	68,670
July 31.....	20,550	65,610
Aug. 31.....	19,370	62,780
Sept. 30.....	18,820	61,860

NOTE.--Contents at 0800 on first day of following month.

11170000 COYOTE CREEK NEAR MADRONE, CALIF.

LOCATION.--Lat 37°10'06", long 121°38'55", near southeast corner of La Laguna Seca Grant, Santa Clara County, on right bank 1.2 miles downstream from Anderson Dam, and 1.8 miles northeast of Madrone.

DRAINAGE AREA.--196 sq mi.

PERIOD OF RECORD.--October 1902 to September 1912, December 1916 to current year. Records for water years 1917-19 incomplete, yearly estimates published in WSP 1315-B. Published as Coyote River near Madrone 1902-12, 1916-26.

GAGE.--Water-stage recorder and concrete control. Altitude of gage is 375 ft (from topographic map). Prior to Mar. 1, 1950, nonrecording gage and water-stage recorders at various sites within 1.4 miles upstream at different datums.

AVERAGE DISCHARGE (unadjusted).--67 years, 65.0 cfs (47,090 acre-ft per year).

EXTREMES.--Current year: Maximum discharge, 77 cfs Aug. 9-21 (gage height, 2.44 ft); minimum daily, 8.3 cfs Nov. 30, Dec. 21.
Period of record: Maximum discharge, 25,000 cfs probably Mar. 7, 1911 (record furnished by Duryea, Haehl, and Gilman); no flow at times.

REMARKS.--Records good. Flow regulated by Coyote (see sta 11169880) and Anderson (see sta 11160920) Lakes; water released during summer. Water is diverted to Main Avenue percolation ponds by Santa Clara Valley Water District.

REVISIONS (WATER YEARS).--WSP 1345: 1932, 1935(M).

DISCHARGE, IN CUBIC FEET PER SECOND, WATER YEAR OCTOBER 1972 TO SEPTEMBER 1973

DAY	OCT	NOV	DEC	JAN	FEB	MAR	APR	MAY	JUN	JUL	AUG	SEP
1	63	25	8.4	9.1	11	9.1	10	55	57	63	61	61
2	63	33	8.8	9.1	11	9.1	9.9	55	57	63	61	61
3	63	33	9.0	9.1	11	9.1	10	55	58	63	62	61
4	65	33	9.1	9.2	11	9.1	10	55	57	60	62	62
5	65	33	9.1	9.1	11	9.6	11	55	57	59	63	62
6	64	33	9.3	9.1	13	10	11	55	58	59	64	61
7	64	33	9.2	9.1	13	10	11	55	59	60	67	59
8	64	32	9.1	9.6	12	10	9.9	55	59	59	71	58
9	63	32	9.1	11	12	9.9	9.9	54	59	58	75	58
10	63	33	9.1	9.9	12	9.9	9.9	54	59	56	75	59
11	53	32	9.3	9.9	13	9.9	9.9	53	62	50	75	59
12	46	32	9.9	9.9	12	9.9	27	53	64	46	75	57
13	46	27	9.4	9.9	12	9.9	41	53	64	48	75	57
14	48	11	9.1	9.9	13	9.9	43	53	64	50	76	57
15	46	9.5	9.1	9.7	12	9.9	43	53	63	50	76	57
16	46	9.4	9.1	11	12	9.9	43	54	64	50	75	57
17	46	9.1	9.2	10	12	11	43	53	65	51	75	57
18	45	9.1	9.1	10	12	10	43	53	65	50	76	55
19	42	9.1	9.1	10	12	11	45	52	64	50	76	55
20	42	9.1	9.1	11	12	11	47	53	64	51	76	56
21	42	9.1	8.3	11	12	11	47	53	63	51	71	57
22	42	9.1	8.9	10	12	11	47	53	61	51	60	57
23	42	9.1	9.1	9.9	12	11	46	53	63	51	60	55
24	41	9.1	9.1	10	12	11	52	56	63	51	60	55
25	41	9.1	9.1	10	12	11	55	57	62	57	60	55
26	40	9.1	9.1	10	13	11	55	57	61	61	61	55
27	40	9.2	9.2	10	16	11	56	57	61	61	61	54
28	40	9.2	9.1	10	9.8	11	55	57	61	60	60	52
29	36	8.6	9.1	11	------	11	56	57	62	61	59	52
30	33	8.3	9.2	11	------	11	55	57	62	61	60	51
31	33	------	9.1	11	------	10	------	57	------	61	61	------
TOTAL	1,527	567.2	281.9	309.5	337.8	318.2	1,011.5	1,692	1,838	1,722	2,089	1,712
MEAN	49.3	18.9	9.09	9.98	12.1	10.3	33.7	54.6	61.3	55.5	67.4	57.1
MAX	65	33	9.9	11	16	11	56	57	65	63	76	62
MIN	33	8.3	8.3	9.1	9.8	9.1	9.9	52	57	46	59	51
AC-FT	3,030	1,130	559	614	670	631	2,010	3,360	3,650	3,420	4,140	3,400
(a)	408	485	152	120	0	99	328	406	600	317	287	642

CAL YR 1972 TOTAL 18,702.8 MEAN 51.1 MAX 98 MIN 8.3 AC-FT 37,100 a 4,110
WTR YR 1973 TOTAL 13,406.1 MEAN 36.7 MAX 76 MIN 8.3 AC-FT 26,590 a 3,840

a Diversion, in acre-feet, to Main Avenue percolation ponds, furnished by Santa Clara Valley Water District.

11172100 UPPER PENITENCIA CREEK AT SAN JOSE, CALIF.

LOCATION.--Lat 37°23'43", long 121°49'38", on north boundary of San Jose Pala Grant, Santa Clara County, on left bank at downstream side of Dorel Drive bridge, 0.1 mile upstream from Dutard Creek near northeast limits of San Jose.

DRAINAGE AREA.--21.5 sq mi.

PERIOD OF RECORD.--October 1961 to current year.

GAGE.--Water-stage recorder. Concrete control since Sept. 12, 1963. Datum of gage is 265.30 ft above mean sea level. Prior to Aug. 3, 1962, at site 0.4 mile downstream at different datum.

AVERAGE DISCHARGE.--12 years, 5.09 cfs (3,690 acre-ft per year).

EXTREMES.--Current year: Maximum discharge, 494 cfs Jan. 18 (gage height, 5.07 ft, from inside high-water mark); minimum daily, 0.01 cfs July 18-20.

Period of record: Maximum discharge, 1,500 cfs Jan. 21, 1967 (gage height, 6.24 ft in gage well; 7.8 ft, from outside gage), from rating curve extended above 270 cfs on basis of slope-area measurement of maximum flow; no flow at times in some years.

Maximum discharge known since at least 1935, 2,100 cfs Apr. 2, 1958, from information furnished by Santa Clara Valley Water District.

REMARKS.--Records fair. Flow partly regulated by Cherry Flat Reservoir 5 miles upstream (capacity, 500 acre-ft).

DISCHARGE, IN CUBIC FEET PER SECOND, WATER YEAR OCTOBER 1972 TO SEPTEMBER 1973

DAY	OCT	NOV	DEC	JAN	FEB	MAR	APR	MAY	JUN	JUL	AUG	SEP
1	.17	.07	.58	1.4	30	57	14	3.1	2.1	.21	.10	.22
2	.27	.08	.57	1.3	24	41	12	2.9	2.1	.20	.10	.21
3	.20	.10	.58	1.3	35	52	12	2.9	2.1	.14	.10	.23
4	.23	.77	.89	1.2	50	70	10	2.7	1.8	.13	.08	.23
5	.23	.19	.99	1.0	35	55	9.6	2.9	1.7	.08	.08	.22
6	.14	.14	2.6	.98	122	57	9.3	2.7	1.4	.09	.08	.21
7	.17	.20	6.3	.91	159	48	8.8	2.7	1.3	.07	.10	.20
8	.14	.17	5.7	1.7	93	71	8.3	2.5	1.2	.06	.13	.16
9	.46	.15	3.4	150	61	54	7.0	2.2	.98	.07	.10	.19
10	.41	.84	2.6	73	180	49	6.7	2.1	.98	.07	.14	.21
11	.21	11	2.2	23	208	52	6.0	1.9	.79	.05	.12	.19
12	.88	1.3	1.9	19	165	38	5.8	1.8	.70	.05	.13	.24
13	.41	1.8	1.7	12	213	31	6.0	1.8	.72	.04	.15	.22
14	1.3	23	1.6	8.7	192	26	6.7	1.8	.79	.03	.09	.25
15	.48	21	1.4	7.3	154	23	5.8	1.7	.80	.03	.09	.27
16	.93	21	1.5	92	96	21	5.5	1.8	.75	.02	.09	.27
17	.43	6.8	3.6	92	73	19	5.5	1.7	.68	.02	.07	.31
18	.42	3.3	4.9	175	54	17	5.1	1.5	.68	.01	.09	.33
19	.53	3.0	7.5	115	40	23	4.8	1.7	.59	.01	.09	.26
20	.44	2.9	5.0	50	33	55	4.8	1.7	.61	.01	.07	.33
21	.38	2.5	4.0	39	27	57	4.1	1.8	.50	.03	.07	.32
22	.38	2.0	4.0	24	23	59	3.9	1.8	.37	.16	.07	.31
23	.31	1.6	3.5	18	20	46	3.9	1.9	.37	.14	.08	.51
24	.28	1.4	3.5	15	19	34	3.9	2.2	.30	.14	.08	.38
25	.20	1.1	3.0	22	18	29	3.6	2.2	.31	.14	.07	.37
26	.18	1.0	2.3	17	18	25	3.6	2.2	.43	.14	.09	.36
27	.13	.92	2.3	13	120	21	3.6	2.4	.57	.12	.13	.32
28	.10	.76	2.6	12	106	19	3.4	2.5	.49	.12	.14	.24
29	.12	.70	2.1	14	------	17	3.4	2.5	.40	.10	.08	.28
30	.06	.58	1.8	84	------	17	3.4	2.4	.32	.10	.08	.32
31	.07	------	1.6	46	------	19	------	2.4	------	.10	.12	------
TOTAL	10.66	110.37	86.21	1,130.79	2,368	1,202	190.5	68.4	26.83	2.68	3.01	8.16
MEAN	.34	3.68	2.78	36.5	84.6	38.8	6.35	2.21	.89	.087	.097	.27
MAX	1.3	23	7.5	175	213	71	14	3.1	2.1	.21	.15	.51
MIN	.06	.07	.57	.91	18	17	3.4	1.5	.30	.01	.07	.16
AC-FT	21	219	171	2,240	4,700	2,380	378	136	53	5.3	6.0	16

CAL YR 1972 TOTAL 327.65 MEAN .90 MAX 23 MIN 0 AC-FT 650
WTR YR 1973 TOTAL 5,207.61 MEAN 14.3 MAX 213 MIN .01 AC-FT 10,330

PEAK DISCHARGE (BASE, 90 CFS)

DATE	TIME	G.H.	DISCHARGE	DATE	TIME	G.H.	DISCHARGE
11-15	2200	4.05	110	2-6	1445	4.37	199
1-9	1230	4.75	338	2-10	0200	4.55	258
1-16	1300	4.60	275	2-13	0345	4.67	303
1-18	1500	5.07	494	2-27	1700	5.05	483
1-30	0330	4.23	158	3-8	0315	4.00	98
2-3	2200	4.06	112	3-21	1715	4.07	115

11173200 ARROYO HONDO NEAR SAN JOSE, CALIF.

LOCATION.--Lat 37°27'42", long 121°46'06", in NE¼NE¼ sec.32, T.5 S., R.2 E., Santa Clara County, on right bank 150 ft upstream from road bridge, 3.5 miles southeast of Calaveras Dam, and 3.5 miles northeast of city limits of San Jose.

DRAINAGE AREA.--77.1 sq mi.

PERIOD OF RECORD.--October 1968 to current year.

GAGE.--Water-stage recorder. Datum of gage is 783.86 ft above mean sea level.

AVERAGE DISCHARGE.--5 years, 53.1 cfs (38,470 acre-ft per year).

EXTREMES.--Current year: Maximum discharge, 3,130 cfs Feb. 7 (gage height, 9.75 ft); minimum daily, 0.25 cfs Oct. 1.
Period of record: Maximum discharge, 4,620 cfs Jan. 26, 1969 (gage height, 10.94 ft); minimum daily, 0.11 cfs July 28-30, 1972.

REMARKS.--Records good except those for period of no gage-height record, which are poor. No regulation or diversion above station.

DISCHARGE, IN CUBIC FEET PER SECOND, WATER YEAR OCTOBER 1972 TO SEPTEMBER 1973

DAY	OCT	NOV	DEC	JAN	FEB	MAR	APR	MAY	JUN	JUL	AUG	SEP
1	.25	1.0	8.3	15	164	354	87	22	9.4	3.4	1.6	1.2
2	.29	1.0	8.0	14	134	249	75	21	9.4	3.2	1.6	1.2
3	.29	1.0	8.0	14	142	263	63	21	9.2	3.1	1.5	1.2
4	.29	10	10	13	280	400	59	21	8.7	3.0	1.4	1.2
5	.29	7.0	12	12	227	308	55	21	8.0	2.9	1.4	1.2
6	.29	6.0	19	11	961	308	53	20	7.3	2.9	1.4	1.2
7	.29	4.7	53	11	1,830	287	50	20	6.8	2.9	1.4	1.2
8	.29	3.9	43	13	546	313	47	19	6.2	2.8	1.4	1.2
9	.29	3.7	29	1,140	332	259	45	18	5.8	2.8	1.4	1.2
10	.50	5.9	23	625	1,090	228	44	17	5.8	2.6	1.4	1.2
11	.35	176	18	321	1,140	231	41	16	5.9	2.6	1.4	1.0
12	.50	70	16	390	914	181	39	16	6.2	2.5	1.4	1.0
13	.35	32	16	209	1,090	155	40	15	6.5	2.4	1.4	1.0
14	.60	505	14	141	824	137	45	15	6.8	2.3	1.3	1.0
15	.80	442	14	103	601	118	39	14	7.1	2.3	1.3	1.0
16	.80	401	14	661	403	103	37	14	7.1	2.3	1.3	1.0
17	.80	133	110	653	292	95	36	13	7.0	2.3	1.2	1.0
18	1.0	69	131	854	222	88	34	12	6.6	2.4	1.2	1.0
19	1.0	47	95	585	179	90	33	12	6.0	2.4	1.3	1.0
20	1.0	32	71	312	148	321	31	11	5.4	2.5	1.2	1.0
21	1.0	24	53	242	128	294	30	11	4.8	2.5	1.2	1.0
22	.80	19	47	172	107	342	29	11	4.6	2.5	1.2	1.2
23	.80	15	42	127	93	250	28	11	4.6	2.5	1.2	2.0
24	.80	13	37	105	93	197	27	11	4.6	2.4	1.2	1.8
25	.80	12	31	108	97	166	26	12	4.5	2.3	1.2	1.8
26	.80	11	25	99	99	146	25	11	4.3	2.1	1.2	1.8
27	.80	10	24	81	692	127	25	11	4.1	2.0	1.2	1.8
28	.80	9.4	24	71	702	111	23	10	4.0	1.9	1.3	1.8
29	1.0	8.8	20	74	------	99	23	9.5	3.6	1.9	1.3	1.8
30	1.0	8.6	17	354	------	96	23	9.2	3.4	1.8	1.3	1.8
31	1.0	------	16	221	------	108	------	9.1	------	1.7	1.3	------
TOTAL	19.87	2,082.0	1,048.3	7,751	13,530	6,424	1,212	453.8	183.7	77.2	41.1	38.8
MEAN	.64	69.4	33.8	250	483	207	40.4	14.6	6.12	2.49	1.33	1.29
MAX	1.0	505	131	1,140	1,830	400	87	22	9.4	3.4	1.6	2.0
MIN	.25	1.0	8.0	11	93	88	23	9.1	3.4	1.7	1.2	1.0
AC-FT	39	4,130	2,080	15,370	26,840	12,740	2,400	900	364	153	82	77

CAL YR 1972 TOTAL 5,038.16 MEAN 13.8 MAX 505 MIN .11 AC-FT 9,990
WTR YR 1973 TOTAL 32,861.77 MEAN 90.0 MAX 1,830 MIN .25 AC-FT 65,180

PEAK DISCHARGE (BASE, 800 CFS, REVISED)

DATE	TIME	G.H.	DISCHARGE	DATE	TIME	G.H.	DISCHARGE
11-15	2215	7.73	1,310	2-7	0430	9.75	3,130
1-9	1630	9.12	2,470	2-10	0645	8.89	2,250
1-16	1600	8.58	1,970	2-13	0715	8.01	1,510
1-18	1645	8.44	1,850	2-27	1930	9.39	2,740

NOTE.--No gage-height record Sept. 1-30.

11176000 ARROYO MOCHO NEAR LIVERMORE, CALIF.

LOCATION.--Lat 37°37'35", long 121°42'13", NW¼SE¼ sec.36, T.3 S., R.2 E., Alameda County, on right bank 100 ft downstream from Mines Road bridge, 2.4 miles upstream from small right-bank tributary, and 5.2 miles southeast of Livermore.

DRAINAGE AREA.--38.2 sq mi.

PERIOD OF RECORD.--January 1912 to September 1930, October 1963 to current year. Records for water year 1914 incomplete, yearly estimate and monthly discharge only for some months, published in WSP 1315-B.

GAGE.--Water-stage recorder. Concrete control since Aug. 5, 1964 (ineffective due to gravel fill). Datum of gage is 746.49 ft above mean sea level. 1912 to October 1914 at present site at different datum. November 1914 to Sept. 30, 1930, at site 1 mile upstream at different datum.

AVERAGE DISCHARGE.--28 years, 4.38 cfs (3,170 acre-ft per year).

EXTREMES.--Current year: Maximum discharge, 820 cfs Feb. 27 (gage height, 7.03 ft), from rating curve extended above 270 cfs; no flow many days.

Period of record: Maximum discharge recorded, 1,250 cfs Jan. 22, 1967 (gage height, 5.90 ft), from rating curve extended above 460 cfs; maximum daily discharge, 1,000 cfs Jan. 25, 1914 (estimated); no flow for parts of most years.

Flood of Dec. 23, 1955, discharge 1,880 cfs (by slope-area measurement of maximum flow).

REMARKS.--Records fair. No regulation or diversion above station.

DISCHARGE, IN CUBIC FEET PER SECOND, WATER YEAR OCTOBER 1972 TO SEPTEMBER 1973

DAY	OCT	NOV	DEC	JAN	FEB	MAR	APR	MAY	JUN	JUL	AUG	SEP
1		0	.30	.88	9.0	51	10	3.2	2.0	.50	.15	.09
2		0	.30	.88	6.4	31	9.5	3.1	1.8	.50	.12	.08
3		0	.30	.88	7.1	50	8.6	2.8	1.8	.44	.11	.08
4		0	.52	.83	29	86	8.0	2.9	1.6	.32	.10	.08
5		0	.74	.88	17	50	7.3	2.8	1.4	.24	.10	.08
6		0	1.8	.79	197	61	6.9	2.6	1.3	.27	.08	.08
7		0	4.6	.74	294	54	6.6	2.6	1.2	.28	.08	.08
8		0	3.7	1.3	160	54	5.8	2.3	1.1	.32	.08	.08
9		0	1.6	126	96	41	5.4	2.3	.92	.30	.08	.08
10		0	1.4	54	239	34	5.6	2.2	.94	.28	.10	.08
11		0	.88	18	321	37	5.9	2.0	1.1	.20	.10	.08
12		0	.74	14	201	28	5.2	1.7	1.1	.20	.10	.08
13		0	.74	8.4	239	20	5.6	1.7	1.4	.20	.11	.08
14		21	.74	4.6	167	15	7.7	1.8	1.4	.20	.12	.08
15		28	.62	2.6	102	13	5.6	1.9	1.6	.20	.11	.08
16		51	.74	95	65	12	5.5	1.8	1.6	.23	.10	.08
17		11	1.8	75	44	11	5.5	1.9	1.4	.24	.10	.08
18		4.1	7.7	160	31	10	5.5	2.0	1.4	.27	.10	.11
19		2.0	6.5	67	23	20	5.0	1.8	1.2	.32	.09	.12
20		1.4	5.5	23	18	74	5.0	1.4	1.2	.33	.08	.12
21		.88	3.3	20	14	74	5.0	1.8	.84	.36	.08	.12
22		.74	2.9	11	11	86	4.5	2.4	.74	.34	.08	.13
23		.62	2.3	6.9	7.7	58	4.5	2.3	.96	.32	.08	.16
24		.52	2.0	5.5	8.4	45	4.5	2.4	.99	.33	.08	.16
25		.44	1.6	6.6	7.7	35	4.0	2.7	.98	.24	.08	.16
26		.36	1.4	5.6	11	26	4.0	2.4	.79	.24	.08	.16
27		.36	1.2	3.7	140	22	4.0	2.1	.70	.21	.08	.16
28		.36	1.4	3.2	134	18	3.5	2.1	.60	.20	.10	.16
29		.30	1.6	3.1	------	15	3.5	1.9	.52	.19	.10	.16
30		.30	1.2	29	------	14	3.5	1.9	.61	.16	.09	.16
31		------	1.0	15	------	12	------	1.9	------	.16	.10	------
TOTAL	0	123.38	61.12	764.38	2,599.3	1,157	171.2	68.7	35.19	8.59	2.96	3.25
MEAN	0	4.11	1.97	24.7	92.8	37.3	5.71	2.22	1.17	.28	.096	.11
MAX	0	51	7.7	160	321	86	10	3.2	2.0	.50	.15	.16
MIN	0	0	.30	.74	6.4	10	3.5	1.4	.52	.16	.08	.08
AC-FT	0	245	121	1,520	5,160	2,290	340	136	70	17	5.9	6.4

CAL YR 1972 TOTAL 276.95 MEAN .76 MAX 51 MIN 0 AC-FT 549
WTR YR 1973 TOTAL 4,995.07 MEAN 13.7 MAX 321 MIN 0 AC-FT 9,910

PEAK DISCHARGE (BASE, 90 CFS)

DATE	TIME	G.H.	DISCHARGE	DATE	TIME	G.H.	DISCHARGE
11-15	2345	6.29	286	2-11	0830	6.64	493
1-9	1445	6.44	364	2-27	1930	7.03	820
1-16	1400	6.29	286	3-3	2100	5.77	105
1-18	1530	6.51	407	3-21	1930	5.85	126
2-6	1545	6.60	465				

11176100 ARROYO LAS POSITAS ABOVE LIVERMORE, CALIF.

LOCATION.--Lat 37°41'40", long 121°42'49", in Las Positas Valley Grant, Alameda County, on left bank at northwest corner boundary of Lawrence Livermore Laboratory, 1,100 ft upstream from Western Pacific Railroad, and 3.0 miles northeast of Livermore.

DRAINAGE AREA.--7.82 sq mi.

PERIOD OF RECORD.--December 1971 to current year.

GAGE.--Water-stage recorder and concrete control. Altitude of gage is 570 ft (from topographic map).

EXTREMES.--Current year: Maximum discharge, 226 cfs Feb. 27 (gage height, 6.35 ft, from floodmarks), from rating curve extended as explained below; no flow many days.
Period of record: Maximum discharge, 226 cfs Feb. 27, 1973 (gage height, 6.35 ft, from floodmarks), from rating curve extended above 30 cfs on basis of field estimate of maximum flow; no flow many days in each year.

REMARKS.--Records fair. Small releases above station from cooling water towers at laboratory and from backwashing at filtration plant.

DISCHARGE, IN CUBIC FEET PER SECOND, WATER YEAR OCTOBER 1972 TO SEPTEMBER 1973

DAY	OCT	NOV	DEC	JAN	FEB	MAR	APR	MAY	JUN	JUL	AUG	SEP
1	0	.01	.05	0	0	.13	.03	.01	.03	.03	.02	.06
2	.01	.01	.05	0	0	.01	.02	0	.04	.03	.02	.02
3	0	.40	.06	0	1.0	8.4	0	0	.02	.04	.01	.01
4	0	2.3	.96	0	.23	3.4	0	.01	.05	.01	.01	.01
5	.01	.01	.09	0	.07	.15	.01	0	.02	0	0	.14
6	.01	0	7.5	0	10	8.0	.02	0	.02	.01	0	.12
7	.02	1.1	3.0	0	8.0	2.6	.02	0	.01	.01	0	.06
8	.01	.16	.14	8.1	.26	3.3	.01	0	.02	0	.01	.02
9	1.3	.05	.09	9.6	.35	.46	0	.01	.02	0	.03	0
10	.14	4.9	.03	.78	8.1	.56	.02	.01	.01	.01	.25	0
11	2.2	7.3	.01	3.5	14	.47	.01	0	.01	.01	.03	0
12	.93	.05	0	1.5	3.2	.26	.06	0	.01	.01	.02	0
13	.02	4.6	0	.06	3.3	.30	.81	0	.03	.01	.03	0
14	7.7	11	0	.01	3.8	.16	.10	0	.02	.01	.05	0
15	.07	10	0	0	1.0	.26	.03	.01	.01	0	.02	0
16	1.2	1.6	.10	9.8	.06	.20	.02	.01	0	0	.02	0
17	.98	.05	1.5	3.7	0	.20	.01	0	.01	.01	.02	0
18	.10	.02	.32	24	0	.20	.01	0	.01	.02	.02	0
19	.02	.01	.78	.40	0	.50	.01	.01	.02	.04	.03	0
20	.02	0	.02	0	0	3.0	.02	0	.02	.05	.02	0
21	.03	.04	.01	2.8	0	2.0	.01	.01	.03	.03	.03	.03
22	.02	.04	.25	.04	0	.41	0	.01	.03	.04	.02	.09
23	.03	.04	.01	0	0	.46	0	.01	.02	.09	.16	.03
24	.03	.04	0	0	0	.03	.02	.03	.02	.05	.53	.02
25	.02	.04	0	.70	0	.02	.02	.01	.01	.07	.17	.01
26	.02	.04	0	.02	5.6	.02	.01	.01	.03	.04	.08	0
27	.03	.04	.40	0	31	.01	.02	0	.05	.05	.04	0
28	.88	.04	.14	0	3.3	.02	.03	0	.05	.03	.06	0
29	.27	.02	0	.36	------	.02	.01	.02	.04	.02	.07	.03
30	.05	.04	0	.65	------	.33	0	.02	.03	.03	.81	0
31	.02	------	0	0	------	.03	------	.02	------	.03	.23	------
TOTAL	16.14	43.95	15.51	66.02	93.27	35.91	1.33	.21	.69	.78	2.81	.65
MEAN	.52	1.47	.50	2.13	3.33	1.16	.044	.007	.023	.025	.091	.022
MAX	7.7	11	7.5	24	31	8.4	.81	.03	.05	.09	.81	.14
MIN	0	0	0	0	0	.01	0	0	0	0	0	0
AC-FT	32	87	31	131	185	71	2.6	.4	1.4	1.5	5.6	1.3

CAL YR 1972 TOTAL 92.43 MEAN .25 MAX 11 MIN 0 AC-FT 183
WTR YR 1973 TOTAL 277.27 MEAN .76 MAX 31 MIN 0 AC-FT 550

PEAK DISCHARGE (BASE, 40 CFS)

DATE	TIME	G.H.	DISCHARGE	DATE	TIME	G.H.	DISCHARGE
10-14	0730	3.19	44	1-16	0830	3.35	53
11-11	0030	3.51	95	1-18	1000	5.66	204
1-8	1715	3.24	44	2-27	1630	6.35	226

11176200 ARROYO MOCHO NEAR PLEASANTON, CALIF.

LOCATION.--Lat 37°41'26", long 121°52'20", in Santa Rita Grant, Alameda County, on right bank 0.3 mile upstream from Santa Rita Road, 0.8 mile downstream from Arroyo Las Positas, and 2 miles north of Pleasanton.

DRAINAGE AREA.--141 sq mi.

PERIOD OF RECORD.--September 1962 to current year.

GAGE.--Water-stage recorder and concrete control. Datum of gage is 319.51 ft above mean sea level. Prior to Oct. 30, 1967, at site 0.4 mile downstream at different datum. Dec. 8, 1967, to July 7, 1968, nonrecording gage at bridge 0.3 mile downstream at different datum.

AVERAGE DISCHARGE.--11 years, 15.1 cfs (10,940 acre-ft per year).

EXTREMES.--Current year: Maximum discharge, 1,700 cfs Jan. 18 (gage height, 12.47 ft); no flow Sept. 12, 24, 26. Period of record: Maximum discharge, 1,760 cfs Feb. 1, 1963 (gage height, 8.60 ft, site and datum then in use), from rating curve extended above 58 cfs on basis of slope-area measurement of maximum flow; no flow at times.

REMARKS.--Records fair. No regulation. Waste water from Livermore sewage disposal plant and gravel operations enters stream about 4 miles upstream from gage.

DISCHARGE, IN CUBIC FEET PER SECOND, WATER YEAR OCTOBER 1972 TO SEPTEMBER 1973

DAY	OCT	NOV	DEC	JAN	FEB	MAR	APR	MAY	JUN	JUL	AUG	SEP
1	1.5	4.8	4.8	4.6	12	84	11	3.7	4.6	3.2	.03	.40
2	4.5	5.0	4.8	5.3	7.6	45	8.0	2.3	4.8	2.6	.03	.39
3	4.9	4.7	4.8	5.5	9.2	176	7.5	1.0	5.2	2.9	.08	.32
4	2.8	22	6.0	6.6	35	222	7.1	.35	5.3	2.0	.03	.02
5	3.5	6.0	5.7	6.5	27	65	6.6	2.5	4.4	.87	.03	.01
6	3.6	5.0	23	6.1	465	199	6.6	4.0	4.4	.26	.02	.07
7	4.4	11	25	6.0	387	96	6.8	3.9	4.2	.93	.02	.01
8	3.7	8.2	14	85	129	150	6.4	5.4	3.6	1.3	.04	.18
9	5.7	5.0	6.6	407	65	55	5.9	4.4	3.9	.22	.04	.14
10	15	49	6.2	237	412	46	6.8	6.9	4.5	.24	.05	.22
11	62	264	6.6	134	570	58	7.7	4.8	4.0	.10	.03	.01
12	19	8.5	6.0	171	311	29	8.1	3.7	4.7	.06	.02	0
13	10	58	5.9	23	334	19	19	3.8	5.0	.11	.06	.12
14	70	286	6.0	11	248	18	14	4.6	4.6	.32	.14	.30
15	21	101	6.4	8.8	125	14	11	5.4	3.8	.08	.16	.18
16	9.3	207	7.0	605	54	14	9.5	4.2	3.5	.11	.16	.30
17	12	14	18	370	38	13	7.6	4.7	5.0	.53	.19	.42
18	3.1	6.8	19	906	26	12	5.5	5.1	4.6	.50	.29	.12
19	3.6	5.7	35	256	17	31	4.9	5.0	3.1	1.0	.22	.12
20	5.2	5.9	14	55	14	100	4.3	5.1	3.7	.77	.06	.10
21	4.3	4.2	7.2	86	12	72	5.5	7.2	4.5	.22	.04	.01
22	4.5	5.4	8.7	34	13	81	8.3	7.2	4.4	.09	.02	.01
23	1.6	5.4	6.4	13	11	34	7.7	6.6	5.6	.43	.11	.01
24	3.9	4.3	5.7	5.5	10	24	5.9	5.2	5.6	.81	.24	0
25	4.3	4.2	4.8	19	8.9	19	5.6	5.1	3.9	.27	.09	.02
26	4.8	4.5	4.8	14	68	19	4.4	6.9	4.6	.23	.32	0
27	5.4	5.2	5.9	9.0	459	16	4.2	5.2	5.3	.17	.19	.01
28	4.8	4.8	7.2	7.6	402	13	4.2	4.5	5.1	.15	.55	.01
29	4.5	5.2	5.2	12	------	12	4.0	4.0	3.8	.40	.65	.01
30	5.0	4.7	4.7	49	------	13	3.2	3.4	2.9	.10	.07	.02
31	5.1	------	4.6	25	------	14	------	4.4	------	.05	.09	------
TOTAL	313.0	1,125.5	290.0	3,583.5	4,269.7	1,763	217.3	140.55	132.6	21.02	4.07	3.53
MEAN	10.1	37.5	9.35	116	152	56.9	7.24	4.53	4.42	.68	.13	.12
MAX	70	286	35	906	570	222	19	7.2	5.6	3.2	.65	.42
MIN	1.5	4.2	4.6	4.6	7.6	12	3.2	.35	2.9	.05	.02	0
AC-FT	621	2,230	575	7,110	8,470	3,500	431	279	263	42	8.1	7.0

CAL YR 1972 TOTAL 2,399.41 MEAN 6.56 MAX 286 MIN .10 AC-FT 4,760
WTR YR 1973 TOTAL 11,863.77 MEAN 32.5 MAX 906 MIN 0 AC-FT 23,530

PEAK DISCHARGE (BASE, 250 CFS, REVISED)

DATE	TIME	G.H.	DISCHARGE	DATE	TIME	G.H.	DISCHARGE
10-14	1015	9.49	301	2-6	1315	11.08	921
11-11	0300	10.85	818	2-11	1245	10.92	849
11-14	0500	10.14	529	2-27	2015	11.65	1,210
1-9	1700	10.90	840	3-3	1715	9.88	438
1-16	1115	11.99	1,400	3-6	1345	9.64	354
1-18	1400	12.47	1,700				

11176400 ARROYO VALLE ABOVE LANG CANYON, NEAR LIVERMORE, CALIF.

LOCATION.--Lat 37°33'00", long 121°39'57", in SE¼ sec.29, T.4 S., R.3 E., Alameda County, on left bank 700 ft upstream from small right-bank tributary, 1,200 ft upstream from Lang Canyon, and 10.5 miles southeast of Livermore.

DRAINAGE AREA.--126 sq mi.

PERIOD OF RECORD.--October 1963 to current year.

GAGE.--Water-stage recorder. Altitude of gage is 800 ft (from topographic map).

AVERAGE DISCHARGE.--10 years, 29.3 cfs (21,230 acre-ft per year).

EXTREMES.--Current year: Maximum discharge, 2,040 cfs Feb. 7 (gage height, 6.56 ft); no flow many days.
Period of record: Maximum discharge, 5,340 cfs Jan. 25, 1969 (gage height, 8.90 ft); no flow at times in each year.

REMARKS.--Records good. No regulation or diversion above station.

DISCHARGE, IN CUBIC FEET PER SECOND, WATER YEAR OCTOBER 1972 TO SEPTEMBER 1973

DAY	OCT	NOV	DEC	JAN	FEB	MAR	APR	MAY	JUN	JUL	AUG	SEP
1		0	4.0	5.7	76	292	48	12	4.6	.45	.16	.14
2		0	3.8	5.6	62	204	43	12	4.5	.34	.14	.14
3		0	3.8	5.6	67	196	40	12	4.4	.35	.12	.12
4		.07	5.2	5.3	154	265	36	12	4.2	.40	.10	.10
5		.37	6.0	4.9	140	187	34	12	3.8	.40	.10	.10
6		.20	10	4.8	874	197	32	11	3.6	.45	.10	.10
7		.29	20	4.5	1,360	188	30	11	3.1	.55	.10	.10
8		.33	20	8.0	451	205	28	10	2.9	.50	.10	.10
9		.26	15	607	249	169	27	9.8	2.7	.41	.12	.10
10		.59	12	520	688	146	27	9.0	2.5	.37	.18	.08
11		15	9.9	178	1,110	150	26	8.2	2.5	.31	.16	.08
12		5.2	8.4	183	711	117	24	7.8	2.5	.30	.14	.08
13		4.8	7.6	108	898	98	25	7.4	2.5	.26	.14	.10
14		94	6.8	72	562	84	28	7.0	2.5	.33	.14	.10
15		111	6.4	52	373	74	24	6.7	2.7	.33	.12	.10
16		354	7.8	722	258	67	22	6.7	2.7	.37	.10	.10
17		112	45	623	202	63	21	6.4	2.5	.40	.09	.10
18		53	40	655	157	58	19	6.2	2.5	.50	.08	.10
19		29	46	478	125	58	18	5.9	2.1	.55	.08	.10
20		20	27	209	103	154	18	5.9	1.9	.58	.08	.10
21		14	19	164	87	155	17	6.2	1.7	.59	.07	.10
22		11	18	118	76	178	16	6.2	1.6	.65	.05	.10
23		9.4	15	82	66	123	16	6.4	1.4	.55	.05	.10
24		7.9	13	63	66	97	15	6.4	1.2	.46	.05	.10
25		6.6	10	62	75	85	15	6.7	1.0	.37	.05	.10
26		5.9	9.2	59	70	78	14	6.7	.90	.38	.05	.10
27		5.4	8.8	47	389	71	14	6.2	.80	.36	.08	.10
28		4.9	8.8	40	644	64	13	5.9	.70	.30	.10	.10
29		4.5	7.5	40	------	57	13	5.6	.60	.29	.12	.10
30		4.1	6.6	145	------	55	13	5.0	.50	.29	.14	.10
31		------	6.1	103	------	56	------	4.8	------	.23	.14	------
TOTAL	0	873.81	426.7	5,374.4	10,093	3,991	716	245.1	71.10	12.62	3.25	3.04
MEAN	0	29.1	13.8	173	360	129	23.9	7.91	2.37	.41	.10	.10
MAX	0	354	46	722	1,360	292	48	12	4.6	.65	.18	.14
MIN	0	0	3.8	4.5	62	55	13	4.8	.50	.23	.05	.08
AC-FT	0	1,730	846	10,660	20,020	7,920	1,420	486	141	25	6.4	6.0

CAL YR 1972 TOTAL 1,857.34 MEAN 5.07 MAX 354 MIN 0 AC-FT 3,680
WTR YR 1973 TOTAL 21,810.02 MEAN 59.8 MAX 1,360 MIN 0 AC-FT 43,260

PEAK DISCHARGE (BASE, 500 CFS)

DATE	TIME	G.H.	DISCHARGE	DATE	TIME	G.H.	DISCHARGE
11-16	0500	4.71	586	2-7	0030	6.56	2,040
1-9	2115	5.62	1,200	2-11	1300	6.09	1,570
1-16	1815	6.10	1,580	2-27	2345	5.60	1,180
1-18	1945	5.45	1,070				

NOTE.--No gage-height record May 3 to June 3.

11176500 ARROYO VALLE NEAR LIVERMORE, CALIF.

LOCATION.--Lat 37°37'24", long 121°45'28", in Valle de San Jose Grant, Alameda County, on right bank 900 ft downstream from highway bridge, 1.1 miles upstream from Dry Creek, 1.3 miles downstream from Del Valle Dam, 4.1 miles south of Livermore, and 6.9 miles southeast of Pleasanton.

DRAINAGE AREA.--147 sq mi.

PERIOD OF RECORD.--January 1912 to September 1930, October 1957 to current year. Monthly discharge only for some periods, published in WSP 1315-B. Published as Arroyo del Valle near Livermore, 1912-29.

GAGE.--Water-stage recorder and concrete control. Datum of gage is 510.44 ft above mean sea level. Prior to November 1914, at site 900 ft upstream at different datum. Nov. 1, 1914, to Sept. 30, 1930, at site 300 ft upstream at different datum.

AVERAGE DISCHARGE.--29 years (1912-30, 1957-68), 29.6 cfs (21,450 acre-ft per year).

EXTREMES.--Current year: Maximum discharge, 1,030 cfs Feb. 11 (gage height, 5.39 ft); minimum daily, 0.54 cfs Feb. 2.
Period of record: Maximum discharge, 12,200 cfs Apr. 2, 1958 (gage height, 10.91 ft); no flow at times. Maximum discharge since construction of Del Valle Dam in 1968, 1,030 cfs Feb. 11, 1973 (gage height, 5.39 ft).
Flood of Dec. 23, 1955, reached a stage of 13.93 ft, from floodmarks (discharge, 18,200 cfs on basis of contracted-opening and slope-area measurement of maximum flow).

REMARKS.--Records good. Flow regulated by Del Valle Reservoir 1.3 miles upstream beginning in September 1968 (capacity, 77,100 acre-ft). Water from Sacramento-San Joaquin Delta imported through South Bay Aqueduct can be pumped into Del Valle Reservoir for storage and later released into the channel for downstream percolation or returned to the South Bay Aqueduct. Records of water temperatures for the current year are published in Part 2 of this report.

DISCHARGE, IN CUBIC FEET PER SECOND, WATER YEAR OCTOBER 1972 TO SEPTEMBER 1973

DAY	OCT	NOV	DEC	JAN	FEB	MAR	APR	MAY	JUN	JUL	AUG	SEP
1	6.0	10	10	11	.63	925	2.7	9.9	9.3	10	38	39
2	5.7	11	10	11	.54	401	2.6	9.8	9.3	19	38	39
3	6.0	11	10	9.9	.60	97	2.3	9.9	9.2	41	38	39
4	5.7	11	11	9.9	.56	94	2.1	9.9	8.8	41	38	39
5	5.8	11	11	9.9	.56	94	2.3	9.9	8.8	40	38	40
6	6.6	11	11	9.9	.81	94	2.2	10	9.0	38	38	34
7	9.9	6.1	11	9.9	275	94	2.0	9.8	8.6	38	38	9.8
8	9.9	1.6	11	7.7	516	121	1.8	9.9	7.7	38	39	38
9	9.2	4.5	11	1.6	521	151	1.8	10	8.2	38	39	38
10	8.8	11	11	1.1	522	152	4.0	10	8.8	38	38	39
11	5.4	12	11	1.3	705	152	9.4	10	8.9	38	38	39
12	1.5	11	11	1.1	981	155	9.3	10	9.1	38	39	38
13	1.3	8.3	11	1.1	973	73	9.3	9.5	8.7	38	38	38
14	1.7	2.0	9.9	.94	962	66	8.8	9.0	7.9	38	38	38
15	1.3	1.8	8.8	.94	948	60	6.5	9.2	7.7	38	38	38
16	1.3	1.8	8.8	2.5	608	39	1.8	9.3	7.7	38	38	38
17	1.2	1.4	8.8	1.4	180	3.8	1.7	9.6	7.7	38	38	38
18	3.8	1.3	8.8	3.6	126	3.6	4.5	9.9	7.7	38	38	38
19	10	1.2	7.8	1.6	125	3.7	11	10	7.7	38	38	38
20	6.9	1.3	1.3	1.3	90	26	9.1	10	7.7	38	39	39
21	6.5	1.4	1.2	1.3	244	92	9.2	10	8.4	38	39	39
22	5.8	1.5	1.3	.94	3.6	124	9.2	9.4	10	38	39	39
23	5.3	1.7	1.2	.94	2.9	125	9.2	9.0	10	38	39	38
24	5.3	1.4	1.2	.80	2.7	75	9.3	10	10	38	39	37
25	5.3	1.1	1.2	.94	2.5	61	9.1	10	10	38	39	37
26	5.3	1.0	1.2	.66	2.7	32	8.9	10	10	38	39	38
27	5.7	1.1	1.2	.66	124	43	9.3	9.8	10	38	39	38
28	5.7	3.4	1.2	.66	529	40	9.4	9.3	10	38	39	37
29	5.7	9.5	3.7	.67	------	25	9.4	8.7	10	38	39	37
30	7.5	10	11	.76	------	3.0	10	8.8	10	38	39	37
31	10	------	11	.66	------	2.7	------	9.0	------	38	39	------
TOTAL	176.1	162.4	229.6	106.67	8,447.10	3,427.8	188.2	299.6	266.9	1,139	1,193	1,113.8
MEAN	5.68	5.41	7.41	3.44	302	111	6.27	9.66	8.90	36.7	38.5	37.1
MAX	10	12	11	11	981	925	11	10	10	41	39	40
MIN	1.2	1.0	1.2	.66	.54	2.7	1.7	8.7	7.7	10	38	9.8
AC-FT	349	322	455	212	16,750	6,800	373	594	529	2,260	2,370	2,210

CAL YR 1972 TOTAL 3,591.98 MEAN 9.81 MAX 84 MIN .78 AC-FT 7,120
WTR YR 1973 TOTAL 16,750.17 MEAN 45.9 MAX 981 MIN .54 AC-FT 33,220

11176600 ARROYO VALLE AT PLEASANTON, CALIF.

LOCATION.--Lat 37°40'02", long 121°53'02", in Valle de San Jose Grant, Alameda County, on right bank 0.4 mile northwest of Pleasanton, and 5.8 miles west of Livermore.

DRAINAGE AREA.--171 sq mi.

PERIOD OF RECORD.--October 1957 to current year.

GAGE.--Water-stage recorder. Concrete control since Sept. 2, 1970. Datum of gage is 311.80 ft above mean sea level.

AVERAGE DISCHARGE.--11 years (1957-68), 27.7 cfs (20,050 acre-ft per year); 5 years (1968-73), 23.9 cfs (17,320 acre-ft per year).

EXTREMES.--Current year: Maximum discharge, 1,060 cfs Feb. 13 (gage height, 11.17 ft); no flow at times. Period of record: Maximum discharge, 11,300 cfs Apr. 3, 1958 (gage height, 25.36 ft); no flow at times in most years. Maximum discharge since construction of Del Valle Dam in 1968, 1,060 cfs Feb. 13, 1973 (gage height, 11.17 ft); maximum gage height, 11.43 ft Mar. 3, 1969.

REMARKS.--Records good. Flow regulated by Del Valle Reservoir 10 miles upstream beginning in September 1968 (capacity, 77,100 acre-ft). Water imported from Sacramento-San Joaquin Delta (see REMARKS for sta 11176500). Flow regulated by pumping and gravel operations above station.

DISCHARGE, IN CUBIC FEET PER SECOND, WATER YEAR OCTOBER 1972 TO SEPTEMBER 1973

DAY	OCT	NOV	DEC	JAN	FEB	MAR	APR	MAY	JUN	JUL	AUG	SEP
1	0	0	0	0	3.3	924	16	.90	.23	0	26	27
2	0	0	0	0	2.2	669	10	.74	.20	0	27	26
3	0	0	.30	0	4.6	146	2.5	.85	0	0	28	27
4	0	0	.13	0	9.5	142	1.2	.90	0	12	26	27
5	0	0	0	0	8.2	110	.60	.96	0	23	26	27
6	0	0	1.9	0	32	121	.20	.87	0	24	26	27
7	0	0	3.5	0	90	107	.04	.73	0	24	26	21
8	0	.62	1.7	10	467	123	0	.65	0	24	26	9.6
9	0	1.1	1.7	29	558	159	0	.67	0	24	27	21
10	0	6.3	1.8	16	601	170	0	.72	0	24	27	24
11	0	14	1.7	16	637	172	0	5.8	0	26	27	25
12	0	11	2.0	15	1,030	159	0	1.0	0	26	27	26
13	0	14	2.2	8.5	1,040	132	4.1	.25	0	26	27	26
14	1.2	17	2.4	4.3	1,020	64	9.9	2.8	0	25	27	26
15	.40	21	2.5	3.0	984	77	12	.63	0	26	26	26
16	.32	15	2.9	51	833	62	8.7	.09	0	26	26	26
17	.03	10	5.4	45	267	40	5.7	.01	0	26	26	26
18	0	7.8	4.3	92	148	23	.56	0	0	26	26	26
19	0	7.0	5.2	73	136	18	0	0	0	26	26	26
20	0	6.3	3.6	28	131	21	0	0	0	26	26	25
21	0	5.2	3.1	24	232	62	0	0	0	26	26	26
22	0	3.2	3.7	21	67	109	.10	0	0	26	26	26
23	0	2.3	1.3	15	23	152	1.1	.25	0	26	27	26
24	0	3.1	.74	9.7	16	97	1.1	.38	0	24	27	26
25	0	2.3	.42	9.4	12	88	.97	.83	0	23	27	26
26	0	.66	.13	6.9	15	48	1.2	.60	0	25	27	24
27	0	.09	.02	5.5	61	45	.94	1.4	0	25	27	24
28	0	0	.21	4.2	326	42	7.6	2.6	0	26	27	24
29	0	0	.01	8.9	------	37	6.3	2.2	0	26	27	24
30	0	0	0	8.0	------	29	4.1	.43	0	26	26	24
31	0	------	0	5.5	------	20	------	0	------	26	27	------
TOTAL	1.95	147.97	52.86	508.9	8,753.8	4,168	94.91	27.26	.43	693	823	744.6
MEAN	.063	4.93	1.71	16.4	313	134	3.16	.88	.014	22.4	26.5	24.8
MAX.	1.2	21	5.4	92	1,040	924	16	5.8	.23	26	28	27
MIN	0	0	0	0	2.2	18	0	0	0	0	26	9.6
AC-FT	3.9	293	105	1,010	17,360	8,270	188	54	.9	1,370	1,630	1,480

CAL YR 1972 TOTAL 1,282.71 MEAN 3.50 MAX 68 MIN 0 AC-FT 2,540
WTR YR 1973 TOTAL 16,016.68 MEAN 43.9 MAX 1,040 MIN 0 AC-FT 31,770

11177000 ARROYO DE LA LAGUNA NEAR PLEASANTON, CALIF.

LOCATION.--Lat 37°36'55", long 121°52'50", in Valle de San Jose Grant, Alameda County, on right bank 0.3 mile upstream from small left-bank tributary, 0.8 mile downstream from highway bridge, and 3.2 miles south of Pleasanton.

DRAINAGE AREA.--405 sq mi.

PERIOD OF RECORD.--January 1912 to September 1930, October 1969 to current year. Monthly discharge only for some periods, published in WSP 1315-B.

GAGE.--Water-stage recorder. Datum of gage is 251.40 ft above mean sea level. January 1912 to September 1917, at site 3.0 miles upstream at different datum. October 1917 to September 1930, at site 0.8 mile downstream at different datum.

AVERAGE DISCHARGE.--17 years (1912-19, 1920-30), 42.5 cfs (30,790 acre-ft per year).

EXTREMES.--Current year: Maximum discharge, 4,390 cfs Jan. 18 (gage height, 15.07 ft); minimum daily, 6.2 cfs Oct. 1.
Period of record: Maximum daily discharge, 9,810 cfs Jan. 25, 1914; no flow at times.

REMARKS.--Records fair. Flow partly regulated by Del Valle Reservoir 15 miles upstream (capacity, 77,100 acre-ft). Water imported from Sacramento-San Joaquin Delta (see REMARKS for sta 11176500). Water from South Bay Aqueduct at times imported through Vallecitos Creek 1.5 miles downstream.

DISCHARGE, IN CUBIC FEET PER SECOND, WATER YEAR OCTOBER 1972 TO SEPTEMBER 1973

DAY	OCT	NOV	DEC	JAN	FEB	MAR	APR	MAY	JUN	JUL	AUG	SEP
1	6.2	12	11	12	54	1,080	55	15	14	8.8	29	35
2	9.1	11	10	13	45	828	44	14	14	8.8	30	34
3	11	11	10	13	55	433	29	12	14	8.1	30	35
4	9.0	57	13	13	89	445	26	11	14	16	31	36
5	8.8	18	11	14	68	189	28	13	13	28	31	34
6	8.5	11	56	14	1,320	490	26	15	12	28	30	35
7	8.7	29	52	14	753	273	26	14	11	28	32	32
8	9.0	19	32	144	626	406	24	15	11	30	31	18
9	12	13	14	1,070	660	264	21	14	9.6	28	32	26
10	30	104	14	459	1,560	251	23	16	9.7	29	33	30
11	107	228	13	351	1,380	285	24	19	11	29	33	32
12	40	27	14	586	1,480	207	21	15	9.1	29	33	33
13	23	68	12	194	1,510	175	40	13	10	29	33	33
14	64	333	13	131	1,440	125	40	16	10	29	34	34
15	57	173	14	110	1,230	129	40	15	9.4	29	32	34
16	23	314	14	1,690	988	109	38	14	11	29	32	34
17	27	54	51	795	354	93	36	12	14	28	28	35
18	30	28	49	2,350	212	77	28	14	12	32	33	33
19	11	21	98	540	193	123	27	14	9.8	31	35	33
20	11	20	39	137	182	255	24	15	8.7	30	34	34
21	11	18	23	159	264	186	23	16	10	31	35	34
22	11	16	44	102	169	212	24	16	10	32	33	35
23	9.4	15	21	77	112	184	24	18	11	32	34	40
24	8.2	14	18	64	109	143	22	17	13	30	35	35
25	11	14	16	72	94	128	21	18	11	30	36	35
26	10	12	13	58	190	96	20	20	11	30	35	32
27	11	13	15	48	1,170	89	18	18	11	31	36	32
28	10	12	19	44	1,000	80	24	18	12	31	35	32
29	10	13	12	58	------	73	24	18	10	32	34	33
30	11	11	13	112	------	75	21	15	8.6	31	34	34
31	11	------	13	68	------	68	------	13	------	31	33	------
TOTAL	618.9	1,689	747	9,512	17,307	7,571	841	473	334.9	848.7	1,016	992
MEAN	20.0	56.3	24.1	307	618	244	28.0	15.3	11.2	27.4	32.8	33.1
MAX	107	333	98	2,350	1,560	1,080	55	20	14	32	36	40
MIN	6.2	11	10	12	45	68	18	11	8.6	8.1	28	18
AC-FT	1,230	3,350	1,480	18,870	34,330	15,020	1,670	938	664	1,680	2,020	1,970

CAL YR 1972 TOTAL 6,376.0 MEAN 17.4 MAX 333 MIN 5.0 AC-FT 12,650
WTR YR 1973 TOTAL 41,950.5 MEAN 115 MAX 2,350 MIN 6.2 AC-FT 83,210

11179000 ALAMEDA CREEK NEAR NILES, CALIF.

LOCATION.--Lat 37°35'14", long 121°57'35", in NW¼ sec.15, T.4 S., R.1 W., Alameda County, on right bank 0.3 mile downstream from railroad bridge, and 1.2 miles northeast of Niles.

DRAINAGE AREA.--633 sq mi.

PERIOD OF RECORD.--January 1891 to current year. Monthly discharge only for some periods, published in WSP 1315-B. Published as "at Niles Dam" 1891-1900, and as "at Sunolglen" 1901-21.

GAGE.--Water-stage recorder and concrete control. Datum of gage is 85.65 ft above mean sea level. Prior to 1901, nonrecording gage at site 1 mile upstream at different datum. 1901 to Sept. 30, 1914, nonrecording gage and Oct. 1, 1914, to Sept. 30, 1916, water-stage recorder at site 4.5 miles upstream at different datum. Oct. 1, 1916, to Dec. 17, 1923, water-stage recorder at site 800 ft upstream at different datum.

AVERAGE DISCHARGE.--71 years (1891-1962), 123 cfs (89,050 acre-ft per year); 11 years (1962-73), 99.7 cfs (72,230 acre-ft per year).

EXTREMES.--Current year: Maximum discharge, 8,350 cfs Jan. 18 (gage height, 9.28 ft); minimum daily, 12 cfs Oct. 26.
Period of record: Maximum discharge, 29,000 cfs Dec. 23, 1955 (gage height, 14.9 ft); minimum (1891-1962), no flow at times; minimum daily (1963 to current year), 1.4 cfs Dec. 7, 8, 1962.

REMARKS.--Records good. Flow regulated by Calaveras Reservoir (usable capacity, 96,800 acre-ft, most of which is diverted for San Francisco water supply) beginning in 1916 although dam not completed until 1925, by San Antonio Reservoir beginning in February 1965 (capacity, 51,000 acre-ft), and by Del Valle Reservoir 23 miles upstream beginning in September 1968 (capacity, 77,100 acre-ft). Natural flow of stream affected by imported water from Delta-Mendota Canal beginning in 1962. Other diversions from ground-water basin for irrigation of 9,000 acres above station. Records of water temperatures and suspended-sediment discharge for the current year are published in Part 2 of this report.

REVISIONS (WATER YEARS).--WSP 1315-B: 1921. WSP 1515: 1951-52, 1956. WSP 1565: 1945.

DISCHARGE, IN CUBIC FEET PER SECOND, WATER YEAR OCTOBER 1972 TO SEPTEMBER 1973

DAY	OCT	NOV	DEC	JAN	FEB	MAR	APR	MAY	JUN	JUL	AUG	SEP
1	61	25	35	16	90	1,480	251	59	160	149	29	51
2	62	67	34	16	70	1,270	240	54	163	136	30	51
3	66	68	33	17	78	852	224	38	158	30	30	52
4	48	79	34	16	182	1,130	227	55	157	24	30	54
5	59	39	15	16	140	744	214	160	158	34	31	52
6	61	54	51	17	1,810	999	233	166	153	41	30	53
7	62	59	66	16	1,100	831	238	166	148	32	30	51
8	63	28	57	58	796	972	232	166	145	36	73	40
9	33	16	26	1,300	766	731	230	168	146	33	71	42
10	29	90	22	684	1,910	666	226	168	150	49	70	49
11	80	265	20	340	1,580	769	211	171	158	49	69	52
12	69	64	20	719	1,690	588	200	166	161	48	71	52
13	33	46	18	215	1,950	506	226	163	163	29	62	50
14	49	390	18	110	2,090	385	223	166	170	31	61	48
15	82	203	19	79	1,730	366	212	168	167	33	73	33
16	28	422	18	2,400	1,430	342	206	163	163	32	71	32
17	36	105	51	1,050	774	319	199	163	168	32	73	32
18	36	43	69	3,750	537	290	190	163	164	34	74	31
19	36	31	105	1,050	473	316	189	168	156	34	74	32
20	54	27	63	321	437	656	183	177	147	34	74	32
21	54	25	37	313	462	519	181	171	144	34	74	31
22	53	39	58	207	409	591	199	171	144	34	71	31
23	52	39	39	132	301	471	195	171	152	34	70	36
24	49	29	31	102	294	400	180	171	156	32	62	34
25	51	36	26	132	275	363	175	168	154	31	64	34
26	12	35	22	148	389	332	178	166	144	30	65	32
27	21	34	22	78	1,720	307	164	174	145	31	65	32
28	60	34	27	65	1,660	292	137	171	144	32	63	31
29	60	35	20	84	------	280	142	168	138	32	62	30
30	17	35	16	215	------	277	127	163	145	31	62	31
31	15	------	19	127	------	279	------	160	------	31	60	------
TOTAL	1,491	2,462	1,091	13,793	25,143	18,323	6,032	4,722	4,621	1,272	1,844	1,211
MEAN	48.1	82.1	35.2	445	898	591	201	152	154	41.0	59.5	40.4
MAX	82	422	105	3,750	2,090	1,480	251	177	170	149	74	54
MIN	12	16	15	16	70	277	127	38	138	24	29	30
AC-FT	2,960	4,880	2,160	27,360	49,870	36,340	11,960	9,370	9,170	2,520	3,660	2,400

CAL YR 1972 TOTAL 20,427.2 MEAN 55.8 MAX 422 MIN 6.4 AC-FT 40,520
WTR YR 1973 TOTAL 82,005.0 MEAN 225 MAX 3,750 MIN 12 AC-FT 162,700

11180500 DRY CREEK AT UNION CITY, CALIF.

LOCATION.--Lat 37°36'22", long 122°01'22", in Arroyo de la Alameda Grant, Alameda County, on right bank 900 ft downstream from bridge on State Highway 238 in Decoto District in Union City, and 1.7 miles upstream from mouth.

DRAINAGE AREA.--9.41 sq mi.

PERIOD OF RECORD.--October 1916 to September 1919 (published as "near Decoto"), April 1959 to current year.

GAGE.--Water-stage recorder and concrete control. Datum of gage is 85.12 ft above mean sea level. Prior to Apr. 1, 1959, at site 1.4 miles downstream at different datum.

AVERAGE DISCHARGE.--17 years, 1.93 cfs (1,400 acre-ft per year).

EXTREMES.--Current year: Maximum discharge, 834 cfs Jan. 16 (gage height, 4.37 ft); no flow for several months. Period of record: Maximum discharge, 930 cfs Oct. 13, 1962 (gage height, 5.27 ft, from outside gage), from rating curve extended above 140 cfs on basis of slope-area measurement of maximum flow; no flow most of each year.

REMARKS.--Records good. No regulation or diversion above station.

REVISIONS (WATER YEARS).--WSP 1929: Drainage area. WRD Calif. 1969: 1962(M), 1963(P), 1965(P), 1967(P).

DISCHARGE, IN CUBIC FEET PER SECOND, WATER YEAR OCTOBER 1972 TO SEPTEMBER 1973

DAY	OCT	NOV	DEC	JAN	FEB	MAR	APR	MAY	JUN	JUL	AUG	SEP
1	0	0	0	1.1	8.2	24	7.9	1.3	.33			
2	0	0	.12	1.1	7.3	18	6.3	1.3	.32			
3	0	.03	.06	1.1	9.2	30	5.5	1.2	.32			
4	0	.13	.30	.95	12	29	5.1	1.2	.29			
5	0	0	.13	.84	8.6	19	4.9	1.2	.30			
6	0	0	2.5	.81	98	39	4.6	1.1	.25			
7	0	.03	4.4	.75	47	26	4.4	1.0	.17			
8	0	0	4.4	3.9	26	33	4.0	1.0	.10			
9	0	0	2.5	48	33	22	3.8	.95	.03			
10	0	.28	1.7	26	66	25	3.6	.91	.05			
11	0	.13	1.4	56	46	22	3.4	.78	.08			
12	0	0	1.1	54	37	16	3.2	.73	.08			
13	0	.39	.89	22	54	14	4.0	.72	.11			
14	.50	6.4	.79	14	53	12	3.1	.70	.11			
15	.20	23	.65	9.6	33	11	2.9	.67	.10			
16	0	23	.69	224	25	9.6	2.8	.64	.09			
17	0	7.5	2.1	94	20	8.9	2.9	.62	.08			
18	0	4.0	3.8	221	16	8.2	2.6	.57	.05			
19	0	3.1	19	55	13	17	2.5	.49	.03			
20	0	3.4	7.5	26	11	19	2.3	.49	0			
21	0	3.1	5.4	22	9.6	15	2.2	.50	0			
22	0	.79	12	14	8.3	11	1.9	.45	0			
23	0	.79	6.1	11	7.7	9.7	1.9	.47	0			
24	0	.53	5.4	8.5	7.6	8.6	1.8	.52	0			
25	0	.28	3.8	11	6.7	8.0	1.7	.49	0			
26	0	.19	3.1	7.8	13	7.7	1.6	.47	0			
27	0	.12	3.0	6.3	73	7.3	1.6	.50	0			
28	0	.08	3.2	5.6	43	6.6	1.5	.39	0			
29	0	.04	2.2	7.2	------	6.0	1.5	.29	0			
30	0	0	1.8	17	------	11	1.4	.28	0			
31	0	------	1.5	11	------	12	------	.30	------			------
TOTAL	.70	77.31	101.53	981.55	792.2	505.6	96.9	22.23	2.89	0	0	0
MEAN	.023	2.58	3.28	31.7	28.3	16.3	3.23	.72	.096	0	0	0
MAX	.50	23	19	224	98	39	7.9	1.3	.33	0	0	0
MIN	0	0	0	.75	6.7	6.0	1.4	.28	0	0	0	0
AC-FT	1.4	153	201	1,950	1,570	1,000	192	44	5.7	0	0	0

CAL YR 1972 TOTAL 186.25 MEAN .51 MAX 23 MIN 0 AC-FT 369
WTR YR 1973 TOTAL 2,580.91 MEAN 7.07 MAX 224 MIN 0 AC-FT 5,120

PEAK DISCHARGE (BASE, 40 CFS)

DATE	TIME	G.H.	DISCHARGE	DATE	TIME	G.H.	DISCHARGE
11-15	2030	2.56	93	2-9	2345	3.39	366
12-19	0300	2.30	46	2-14	1200	2.68	122
1-9	1430	2.58	98	2-27	1645	3.27	319
1-11	1630	2.96	206	3-6	1030	2.54	89
1-16	1030	4.37	834	3-19	2145	2.49	78
2-6	1230	3.07	245				

11180700 PATTERSON CREEK AT UNION CITY, CALIF.

LOCATION.--Lat 37°55'09", long 122°02'50", in Potrero de Los Cerritos Grant, Alameda County, on right bank 0.1 mile downstream from effluence from Alameda Creek, 0.2 mile upstream from bridge on State Highway 17 (Nimitz Freeway), and 2.0 miles southwest of Decoto District in Union City.

PERIOD OF RECORD.--October 1958 to current year.

GAGE.--Water-stage recorder. Datum of gage is 4.13 ft above mean sea level. Prior to Oct. 26, 1966, at site 0.2 mile downstream at same datum.

EXTREMES.--Current year: Maximum discharge, 6,130 cfs Jan. 18 (gage height, 15.2 ft, from outside high-water marks); no flow many days.
Period of record: Maximum discharge, 10,500 cfs Feb. 1, 1963 (gage height, 20.4 ft, from floodmarks); no flow at times in each year.

REMARKS.--Records fair. This stream is a distributary of Alameda Creek. See REMARKS for Alameda Creek at Union City.

DISCHARGE, IN CUBIC FEET PER SECOND, WATER YEAR OCTOBER 1972 TO SEPTEMBER 1973

DAY	OCT	NOV	DEC	JAN	FEB	MAR	APR	MAY	JUN	JUL	AUG	SEP
1	.50	.25	.10	.5	68	1,430	243	125	103	120	0	.18
2	.50	.25	.10	.4	12	1,290	225	40	115	117	0	.18
3	.50	.34	.10	.3	37	817	208	15	108	22	0	.18
4	.50	.62	5.0	.6	226	1,190	215	5.6	104	8.0	0	.18
5	.41	.34	1.7	.3	153	785	194	54	106	8.0	.80	.19
6	.41	.33	11	.3	1,580	998	208	90	101	6.0	.15	.21
7	.33	.39	9.3	.2	1,190	893	222	56	90	.61	.15	.21
8	.33	.33	5.0	11	760	950	218	107	178	.25	.09	.21
9	.33	.33	2.3	1,290	752	633	209	111	110	.11	.86	.24
10	.33	14	1.7	1,020	1,850	591	211	118	113	.06	1.9	.24
11	73	466	.68	370	1,530	736	195	127	119	.05	0	.24
12	31	122	.34	916	1,660	581	187	125	118	.03	.17	1.0
13	.32	60	.15	300	1,930	511	207	126	124	.01	0	3.4
14	.25	358	.02	134	2,100	400	210	127	136	0	0	4.2
15	.24	256	.01	90	1,790	373	196	135	134	.13	0	21
16	.18	529	1.9	2,300	1,430	358	189	129	130	.04	0	7.9
17	.18	104	3.4	1,200	696	330	176	126	134	.01	0	.42
18	.18	2.4	19	3,600	431	298	174	130	133	0	0	.06
19	.18	1.4	96	900	419	353	168	143	125	0	0	.01
20	.18	.83	66	334	398	668	163	153	122	0	0	.04
21	.18	.44	24	305	402	479	165	149	121	0	0	.13
22	.18	.30	28	225	443	591	180	153	121	0	.03	.24
23	.22	.20	28	86	290	395	172	152	126	.22	.08	.33
24	.25	.10	8.4	6.5	283	358	154	156	132	.12	.07	.04
25	.25	.10	4.5	13	263	330	146	152	132	.14	.07	0
26	.25	.10	3.4	57	434	328	148	152	121	.07	.07	.22
27	.25	.10	2.8	51	1,420	298	140	159	114	0	.07	0
28	.25	.10	3.2	33	1,790	278	112	140	117	0	.10	0
29	.25	.10	1.7	53	------	270	114	130	108	.47	.13	.13
30	.25	.10	1.4	299	------	270	123	120	113	.07	.18	.34
31	.25	------	1.1	154	------	276	------	110	------	0	.18	------
TOTAL	112.43	1,918.45	330.30	13,750.1	24,337	18,058	5,472	3,615.6	3,608	283.39	5.10	41.72
MEAN	3.63	63.9	10.7	444	869	583	182	117	120	9.14	.16	1.39
MAX	73	529	96	3,600	2,100	1,430	243	159	178	120	1.9	21
MIN	.18	.10	.01	.20	12	270	112	5.6	90	0	0	0
AC-FT	223	3,810	655	27,270	48,270	35,820	10,850	7,170	7,160	562	10	83

CAL YR 1972 TOTAL 2,642.94 MEAN 7.2 MAX 529 MIN 0 AC-FT 5,240
WTR YR 1973 TOTAL 71,532.09 MEAN 196 MAX 3,600 MIN 0 AC-FT 141,900

NOTE.--No gage-height record Jan. 16-19.

11180750 ALAMEDA CREEK AT UNION CITY, CALIF.

LOCATION.--Lat 37°35'46", long 122°03'15", in Arroyo de la Alameda Grant, Alameda County, on left bank 5 ft downstream from bridge on Baker Road, 1 mile downstream from Dry Creek, and 1.4 miles east of Alvarado District in Union City.

DRAINAGE AREA.--653 sq mi.

PERIOD OF RECORD.--October 1958 to September 1973 (discontinued).

GAGE.--Water-stage recorder. Datum of gage is 0.40 ft above mean sea level.

AVERAGE DISCHARGE.--8 years (1958-66), 2.10 cfs (1,520 acre-ft per year); 7 years (1966-73), 0.38 cfs (275 acre-ft per year).

EXTREMES.--Current year: Maximum discharge, 102 cfs Feb. 27 (gage height, 11.81 ft); no flow many days. Period of record: Maximum discharge, 1,770 cfs Feb. 1, 1963 (gage height, 19.25 ft, from floodmarks); no flow at times in each year.

REMARKS.--Records fair. Flow regulated by gates at Patterson Creek since October 1966. A storm drain flows into channel 0.5 mile upstream beginning in 1970. For total flow in Alameda Creek, add flow of Patterson Creek at Union City (see REMARKS for Alameda Creek near Niles). Diversion by Alameda County Water District to percolation ponds between stations near Niles and at Union City; additional percolation to ground water by placing check dams in channel during summer months.

DISCHARGE, IN CUBIC FEET PER SECOND, WATER YEAR OCTOBER 1972 TO SEPTEMBER 1973

DAY	OCT	NOV	DEC	JAN	FEB	MAR	APR	MAY	JUN	JUL	AUG	SEP
1	0	.05	0	0	.25	.87	.18	.09	.09	.16		
2	.03	.05	0	0	.21	.64	.18	.29	.16	.08		
3	.07	.40	0	0	1.6	4.5	.17	.12	.53	.28		
4	.09	2.9	.61	0	1.0	1.6	.16	.09	.20	.25		
5	.10	.05	.01	.03	.62	.64	.16	.12	.14	.03		
6	.05	.05	2.7	.02	20	4.1	.16	.21	.40	.22		
7	.05	1.7	1.6	.02	2.9	1.3	.23	.39	.13	.58		
8	1.0	.07	.17	3.2	1.1	2.3	.15	.39	.14	.27		
9	.10	.05	.05	6.2	4.2	.51	.15	.15	.51	0		
10	.10	4.3	.03	1.2	5.6	1.0	.18	.23	.25	.01		
11	2.0	4.1	.02	4.6	5.6	.58	.19	.69	.38	.21		
12	.10	.05	.01	.99	2.7	.38	.15	.35	.12	.10		
13	.10	4.7	.01	.52	5.4	.34	1.6	.15	.14	.10		
14	5.0	6.7	0	.31	3.9	.31	.41	.13	.17	.10		
15	.10	6.0	0	.25	.91	.29	.13	.09	.32	.05		
16	1.0	1.7	.21	20	.65	.33	.13	.22	.24	.05		
17	.80	.34	1.5	6.6	.52	.35	.12	.56	.73	.05		
18	.20	.32	.79	16	.42	.35	.57	.69	.58	.05		
19	.10	.37	2.1	1.8	.37	4.4	.12	.29	.53	.05		
20	.10	.11	.11	.70	.33	1.6	.12	.62	.50	.05		
21	.05	.07	.08	1.3	.32	1.9	.12	.29	.37	.05		
22	.05	.04	.60	.40	.27	.39	.36	.08	.13	.05		
23	.05	.03	.10	.29	.27	.30	.10	.07	.14	0		
24	.05	.01	.16	.25	.97	.23	.09	.40	.21	0		
25	.05	.01	.05	1.3	.25	.19	.25	.34	.33	0		
26	.05	.01	.03	.26	4.1	.18	.12	.06	.12	0		
27	.05	0	.04	.22	16	.17	.11	.10	.37	0		
28	.10	0	.14	.20	2.7	.16	.11	.25	.32	0		
29	.10	0	.03	2.1	------	.16	.10	.06	.13	0		
30	.10	0	.01	3.0	------	2.4	.10	.26	.15	0		
31	.05	------	.01	.53	------	.41	------	.14	------	0		------
TOTAL	11.79	34.18	11.17	72.29	83.16	32.88	6.72	7.92	8.53	2.79	0	0
MEAN	.38	1.14	.36	2.33	2.97	1.06	.22	.26	.28	.090	0	0
MAX	5.0	6.7	2.7	20	20	4.5	1.6	.69	.73	.58	0	0
MIN	0	0	0	0	.21	.16	.09	.06	.09	0	0	0
AC-FT	23	68	22	143	165	65	13	16	17	5.5	0	0

CAL YR 1972 TOTAL 117.91 MEAN .32 MAX 6.7 MIN 0 AC-FT 234
WTR YR 1973 TOTAL 271.43 MEAN .74 MAX 20 MIN 0 AC-FT 538

NOTE.--No gage-height record July 11 to Sept. 30.

11181000 SAN LORENZO CREEK AT HAYWARD, CALIF.

LOCATION.--Lat 37°41'11", long 122°03'44", in San Lorenzo Grant, Alameda County, on right bank at bridge on B Street, just outside city limits of Hayward, 0.5 mile downstream from Crow Creek, and 0.9 mile downstream from Don Castro Dam.

DRAINAGE AREA.--37.5 sq mi.

PERIOD OF RECORD.--October 1939 to September 1940, October 1946 to current year. Monthly discharge only for some periods, published in WSP 1315-B.

GAGE.--Water-stage recorder and concrete control (control ineffective since 1952 due to gravel fill). Datum of gage is 133.16 ft above mean sea level. January to September 1940, nonrecording gage on bridge at present site and datum.

AVERAGE DISCHARGE.--28 years, 14.7 cfs (10,650 acre-ft per year).

EXTREMES.--Current year: Maximum discharge, 3,600 cfs Feb. 27 (gage height, 14.33 ft); no flow for several days. Period of record: Maximum discharge, 7,460 cfs Oct. 13, 1962 (gage height, 19.73 ft, from floodmarks), from rating curve extended above 2,700 cfs on basis of slope-area measurement of maximum flow; maximum gage height, 20.82 ft, from floodmarks, Dec. 22, 1955; no flow at times.

REMARKS.--Records good. Flow partly regulated by Cull Creek Reservoir beginning in October 1962 (capacity, 310 acre-ft) and Don Castro Reservoir 0.9 mile upstream beginning in January 1965 (capacity, 380 acre-ft). A few very small diversions above station.

REVISIONS (WATER YEARS).--WSP 1315-B: 1947(M), 1949(M). WSP 1345: 1940(M). WSP 1715: 1947.

DISCHARGE, IN CUBIC FEET PER SECOND, WATER YEAR OCTOBER 1972 TO SEPTEMBER 1973

DAY	OCT	NOV	DEC	JAN	FEB	MAR	APR	MAY	JUN	JUL	AUG	SEP
1	.10	.13	2.1	4.7	35	124	35	8.2	3.3	.98	.33	0
2	.04	.11	2.4	4.7	37	93	28	8.6	3.2	1.1	.20	0
3	.04	1.3	2.9	4.7	47	152	24	8.1	3.3	1.0	.17	0
4	.03	7.8	3.6	4.3	52	108	23	8.2	3.2	.79	.17	.05
5	.03	.15	4.0	4.2	43	76	22	8.0	2.7	.70	.17	.14
6	.03	.10	11	4.2	418	148	21	6.2	2.1	.61	.14	.14
7	.03	1.7	7.0	4.0	206	79	20	6.6	1.7	.67	.15	.16
8	.03	.28	4.8	50	119	93	17	6.0	1.0	.90	.09	.13
9	.32	.19	3.3	392	148	64	17	6.3	.78	.79	.13	.10
10	.07	9.4	3.0	112	315	76	16	5.8	.40	.54	.13	.09
11	13	7.7	2.8	284	162	66	14	5.5	.60	.67	.13	.13
12	.12	.76	2.8	543	158	47	12	5.1	.68	.59	.53	.12
13	.09	8.6	2.9	135	168	43	22	4.9	1.2	.58	.44	.13
14	.87	30	2.6	84	214	39	17	5.0	.78	.83	.25	.16
15	.30	70	2.6	66	134	41	15	4.5	.68	.76	.20	.22
16	.66	49	3.1	778	107	41	14	4.3	.68	.59	.17	.31
17	.25	7.6	15	301	88	41	15	4.4	.88	.67	.57	.23
18	.10	4.2	15	1,150	72	38	13	4.5	.46	.79	.36	.26
19	.09	5.3	67	260	61	82	13	4.6	.34	1.1	0	.23
20	.09	3.1	16	127	53	82	12	5.5	1.1	1.0	0	1.5
21	.08	2.6	10	109	46	70	11	5.6	1.4	.83	0	.81
22	.08	2.6	30	70	41	49	10	5.8	1.1	.83	.01	.81
23	.08	2.1	13	53	37	44	10	6.4	1.4	.64	.05	.47
24	1.4	2.1	11	45	36	42	9.9	5.5	1.6	.58	.04	.29
25	1.4	1.9	8.1	50	29	40	9.1	5.4	1.5	.44	.03	.24
26	.08	1.9	7.2	36	100	38	8.9	4.5	1.3	.31	.02	.17
27	.08	1.9	7.7	29	653	36	8.7	4.2	1.0	.27	0	.16
28	.08	1.9	7.3	33	242	35	8.6	4.2	1.1	.24	0	.11
29	.09	2.1	5.8	47	------	34	8.3	3.5	.95	.24	0	.11
30	.10	2.1	5.3	59	------	80	8.3	3.7	1.0	.24	0	.12
31	.10	------	5.2	46	------	50	------	3.3	------	.28	0	------
TOTAL	19.86	228.62	284.5	4,889.8	3,821	2,051	462.8	172.4	41.43	20.56	4.48	7.39
MEAN	.64	7.62	9.18	158	136	66.2	15.4	5.56	1.38	.66	.14	.25
MAX	13	70	67	1,150	653	152	35	8.6	3.3	1.1	.57	1.5
MIN	.03	.10	2.1	4.0	29	34	8.3	3.3	.34	.24	0	0
AC-FT	39	453	564	9,700	7,580	4,070	918	342	82	41	8.9	15

CAL YR 1972 TOTAL 726.88 MEAN 1.99 MAX 70 MIN .01 AC-FT 1,440
WTR YR 1973 TOTAL 12,003.84 MEAN 32.9 MAX 1,150 MIN 0 AC-FT 23,810

PEAK DISCHARGE (BASE, 350 CFS)

DATE	TIME	G.H.	DISCHARGE	DATE	TIME	G.H.	DISCHARGE
1-9	1300	9.36	994	2-9	2400	10.26	1,380
1-12	0845	10.41	1,440	2-14	1130	8.04	554
1-18	0930	13.56	3,140	2-27	1700	14.33	3,600
2-6	1200	9.53	1,060	3-6	1300	7.30	352

11181008 CASTRO VALLEY CREEK AT HAYWARD, CALIF.

LOCATION.--Lat 37°40'48", long 122°04'46", in San Lorenzo (Castro) Grant, Alameda County, on left bank at Hayward, 700 ft upstream from mouth, and 700 ft downstream from small left-bank tributary.

DRAINAGE AREA.--5.51 sq mi.

PERIOD OF RECORD.--October 1971 to current year.

GAGE.--Water-stage recorder and crest-stage gage. Altitude of gage is 100 ft (from topographic map).

EXTREMES.--Current year: Maximum discharge, 665 cfs Feb. 27 (gage height, 7.15 ft), from rating curve extended as explained below; minimum daily, 0.16 cfs Oct. 5.
Period of record: Maximum discharge, 665 cfs Feb. 27, 1973 (gage height, 7.15 ft), from rating curve extended above 53 cfs on basis of slope-area measurements at gage heights 3.92 and 6.02 ft; minimum daily, 0.10 cfs Oct. 1-3, 11, 15-20, 1971.

REMARKS.--Records fair. No regulation or diversion above station. Records of chemical analyses and suspended-sediment discharge for the current year are published in Part 2 of this report.

DISCHARGE, IN CUBIC FEET PER SECOND, WATER YEAR OCTOBER 1972 TO SEPTEMBER 1973

DAY	OCT	NOV	DEC	JAN	FEB	MAR	APR	MAY	JUN	JUL	AUG	SEP
1	.19	.20	.50	.75	2.5	6.5	2.2	.69	.49	.50	.50	.47
2	.30	.22	.50	.73	2.3	4.4	1.9	.76	.61	.50	.45	.52
3	.20	21	2.1	.72	12	39	1.7	.74	.63	.50	.54	.55
4	.18	45	1.8	.63	4.3	7.6	1.7	.80	.58	.50	.57	.45
5	.16	2.0	.58	.60	7.3	4.5	1.7	.82	.54	.50	.52	.43
6	.41	1.5	23	.62	100	35	1.6	.67	.63	.50	.45	.42
7	.29	25	9.3	.60	9.1	13	1.6	.68	.73	.50	.44	.51
8	.23	.72	1.5	41	4.6	8.5	1.5	.66	.75	.50	.54	.56
9	11	2.0	1.3	101	39	4.1	1.4	.74	.78	.50	.54	.52
10	1.2	47	.98	6.9	25	11	1.4	.74	.76	.50	.60	.41
11	63	14	.87	71	22	4.1	1.4	.75	.56	.50	.60	.35
12	3.2	1.2	.69	84	28	3.1	1.2	.80	.58	.50	.46	.45
13	.54	30	.65	7.1	22	2.7	3.8	.77	.46	.50	.47	.34
14	15	37	.60	3.8	36	2.4	1.2	.68	.47	.50	.52	.34
15	8.8	99	.58	3.5	6.7	2.3	1.2	.58	.53	.50	.52	.39
16	19	22	3.5	144	4.6	2.1	1.1	.70	.68	.50	.50	.58
17	4.5	3.2	24	53	4.0	2.4	1.3	.67	.66	.50	.52	1.1
18	.70	1.8	3.5	151	3.4	1.9	.97	.67	.56	.50	.63	.68
19	.51	12	19	11	3.1	35	1.0	.58	.67	.50	.51	.68
20	.42	1.6	2.6	5.4	2.8	7.9	.99	.59	.71	.50	.50	4.8
21	.44	1.3	1.9	15	2.6	15	1.2	.55	.80	.50	.46	.73
22	.33	1.6	6.6	3.7	2.3	2.9	1.1	.52	.50	.50	.44	3.6
23	.30	.97	1.8	3.0	2.1	2.4	1.0	.55	.50	.50	.49	.54
24	.29	.83	2.2	4.9	4.0	2.1	.93	.57	.50	.50	.49	.35
25	.28	.74	1.2	9.2	1.9	2.0	.93	.51	.50	.50	.51	.32
26	.27	.70	1.0	2.7	49	1.9	.90	.57	.50	.50	.53	.42
27	.27	.65	4.2	2.3	150	1.8	.87	.62	.50	.50	.49	.42
28	.25	.60	1.2	2.1	21	1.7	.93	.75	.50	.50	.50	.42
29	.23	.53	.90	20	------	1.6	.89	.66	.50	.50	.54	.50
30	.19	.52	.82	6.4	------	35	.79	.52	.50	.50	.49	.46
31	.20	------	.74	5.1	------	3.7	------	.54	------	.50	.43	------
TOTAL	132.88	374.88	120.11	761.75	571.6	267.6	40.40	20.45	17.68	15.50	15.75	22.31
MEAN	4.29	12.5	3.87	24.6	20.4	8.63	1.35	.66	.59	.50	.51	.74
MAX	63	99	24	151	150	39	3.8	.82	.80	.50	.63	4.8
MIN	.16	.20	.50	.60	1.9	1.6	.79	.51	.46	.50	.43	.32
AC-FT	264	744	238	1,510	1,130	531	80	41	35	31	31	44

CAL YR 1972 TOTAL 929.65 MEAN 2.54 MAX 99 MIN .16 AC-FT 1,840
WTR YR 1973 TOTAL 2,360.91 MEAN 6.47 MAX 151 MIN .16 AC-FT 4,680

PEAK DISCHARGE (BASE, 400 CFS)

DATE	TIME	G.H.	DISCHARGE	DATE	TIME	G.H.	DISCHARGE
11-3	2320	4.87	412	1-18	0740	6.06	554
11-15	1915	6.02	550	2-6	1025	5.51	496
1-9	1115	5.22	460	2-9	2210	5.69	517
1-12	0605	5.10	444	2-27	1525	7.15	665
1-16	0740	5.87	535				

11181040 SAN LORENZO CREEK AT SAN LORENZO, CALIF.

LOCATION.--Lat 37°41'03", long 122°08'20", in San Lorenzo (Soto) Grant, Alameda County, on left bank 400 ft downstream from Washington Avenue bridge in San Lorenzo, and 1.6 miles upstream from mouth.

DRAINAGE AREA.--44.6 sq mi.

PERIOD OF RECORD.--October 1967 to current year.

GAGE.--Water-stage recorder and crest-stage gage. Datum of gage is 6.13 ft above mean sea level (levels by Alameda County Flood Control and Water Conservation District).

AVERAGE DISCHARGE.--6 years, 21.9 cfs (15,870 acre-ft per year).

EXTREMES.--Current year: Maximum discharge, 3,680 cfs Feb. 27 (gage height, 7.98 ft), from rating curve extended above 1,200 cfs; minimum daily, 0.52 cfs Oct. 5.
Period of record: Maximum discharge, 3,680 cfs Feb. 27, 1973 (gage height, 7.98 ft), from rating curve extended above 1,200 cfs; minimum daily, 0.05 cfs Oct. 23, 1968.

REMARKS.--Records fair. Flow partly regulated by Cull Creek Reservoir beginning in October 1962 (capacity, 310 acre-ft), and Don Castro Reservoir 7 miles upstream beginning in January 1965 (capacity, 380 acre-ft). A few very small diversions above station.

DISCHARGE, IN CUBIC FEET PER SECOND, WATER YEAR OCTOBER 1972 TO SEPTEMBER 1973

DAY	OCT	NOV	DEC	JAN	FEB	MAR	APR	MAY	JUN	JUL	AUG	SEP
1	.61	.72	1.9	6.5	42	115	34	14	11	1.1	1.4	1.2
2	.69	.79	2.0	6.2	38	90	32	13	9.0	1.2	1.8	1.1
3	.62	21	5.4	6.2	56	136	30	13	8.0	1.1	1.2	1.2
4	.56	53	7.1	5.9	52	122	29	13	7.0	1.2	1.2	3.2
5	.52	2.2	4.0	5.2	47	81	28	12	6.5	1.2	1.2	2.0
6	.66	1.3	49	5.4	405	140	27	12	5.5	1.1	1.3	.90
7	.56	26	30	4.9	172	96	27	12	6.3	1.1	2.5	1.1
8	.55	2.6	11	90	116	111	25	12	5.2	1.3	1.5	1.1
9	17	2.4	5.9	452	158	74	25	12	5.1	1.3	1.6	1.1
10	5.1	46	4.8	119	307	91	24	12	3.9	1.2	2.1	1.0
11	81	23	4.3	281	160	85	23	12	4.4	1.2	2.4	1.0
12	8.6	4.2	3.8	545	190	59	22	12	4.8	1.6	2.5	1.2
13	1.4	42	3.7	149	166	57	38	12	4.9	1.5	2.3	1.3
14	23	65	3.6	78	195	48	24	12	4.7	2.1	2.5	1.5
15	17	89	3.8	62	135	45	22	12	4.5	2.2	2.7	1.3
16	17	82	10	928	109	44	22	10	4.6	2.3	2.9	2.7
17	9.7	18	56	330	86	46	20	10	4.5	2.5	3.3	3.1
18	1.5	8.5	39	1,330	66	43	20	10	3.5	2.9	4.0	2.7
19	1.1	13	92	253	59	87	20	10	3.3	3.0	4.2	2.8
20	.93	5.8	24	151	56	108	18	10	2.7	3.1	4.8	8.6
21	.90	4.2	18	148	51	79	18	10	2.2	2.6	5.2	1.4
22	.80	4.3	40	83	43	51	18	12	2.0	2.0	5.5	5.6
23	.79	3.1	20	59	41	43	16	12	1.8	1.4	5.4	2.2
24	4.1	2.7	19	53	46	40	16	12	2.1	1.3	5.0	1.1
25	6.4	2.5	16	75	38	39	16	12	1.8	1.5	4.0	.94
26	.81	2.4	15	46	137	39	15	12	1.8	1.2	1.8	.95
27	.74	2.4	20	37	814	37	15	12	1.4	1.1	1.8	1.0
28	.69	2.2	15	36	215	36	15	12	1.2	1.1	1.9	1.2
29	.67	2.0	9.5	85	------	34	14	12	1.1	1.3	1.6	1.1
30	.61	2.0	7.6	96	------	98	14	12	1.1	1.2	1.4	1.2
31	.68	------	7.2	65	------	55	------	19	------	3.4	1.2	------
TOTAL	205.29	534.31	548.6	5,591.3	4,000	2,229	667	372	125.9	52.3	82.2	56.79
MEAN	6.62	17.8	17.7	180	143	71.9	22.2	12.0	4.20	1.69	2.65	1.89
MAX	81	89	92	1,330	814	140	38	19	11	3.4	5.5	8.6
MIN	.52	.72	1.9	4.9	38	34	14	10	1.1	1.1	1.2	.90
AC-FT	407	1,060	1,090	11,090	7,930	4,420	1,320	738	250	104	163	113

CAL YR 1972 TOTAL 2,000.09 MEAN 5.46 MAX 92 MIN .30 AC-FT 3,970
WTR YR 1973 TOTAL 14,464.69 MEAN 39.6 MAX 1,330 MIN .52 AC-FT 28,690

PEAK DISCHARGE (BASE, 850 CFS)

DATE	TIME	G.H.	DISCHARGE	DATE	TIME	G.H.	DISCHARGE
1-9	1130	5.89	1,460	2-6	1230	5.56	1,140
1-12	0830	6.16	1,710	2-10	0045	5.85	1,420
1-16	0945	7.50	3,100	2-27	1745	7.98	3,680
1-18	1145	7.88	3,560				

PERALTA CREEK BASIN

11181300 PERALTA CREEK AT OAKLAND, CALIF.

LOCATION.--Lat 37°46'59", long 122°13'06", in San Antonio (A M Peralta) Grant, Alameda County, on left bank at Oakland, 150 ft upstream from Foothill Boulevard.

DRAINAGE AREA.--1.67 sq mi.

PERIOD OF RECORD.--October 1972 to July 1973 (discontinued).

GAGE.--Water-stage recorder. Altitude of gage is 65 ft (from topographic map).

EXTREMES.--Maximum discharge during period, 537 cfs Jan. 16 (gage height, 8.07 ft), from rating curve extended above 57 cfs on basis of computation of flow through culvert; minimum daily, 0.24 cfs Oct. 4-8, June 15-24.

REMARKS.--Records good. Natural runoff from urban area. Records of chemical analyses and suspended-sediment discharge for the current year are published in Part 2 of this report.

DISCHARGE, IN CUBIC FEET PER SECOND, WATER YEAR OCTOBER 1972 TO SEPTEMBER 1973

DAY	OCT	NOV	DEC	JAN	FEB	MAR	APR	MAY	JUN	JUL	AUG	SEP
1	.30	.54	.30	.70	1.6	2.8	1.4	.54	.46	.30		
2	.38	.54	.30	.70	1.5	2.4	1.2	.54	.38	.30		
3	.27	12	1.5	.70	6.6	8.3	1.2	.62	.38	.30		
4	.24	7.3	.86	.66	3.4	3.5	1.1	.54	.38	.30		
5	.24	.91	.38	.64	3.4	2.8	1.0	.54	.27	.30		
6	.24	.85	5.2	.62	21	9.0	1.0	.54	.30	.27		
7	.24	3.2	2.2	.62	5.0	5.7	1.0	.56	.30	.27		
8	.24	.71	.62	15	3.2	3.5	1.0	.61	.30	.27		
9	7.3	1.6	.54	26	18	2.3	1.0	.64	.30	.30		
10	1.5	21	.54	3.3	14	4.3	1.0	.64	.27	.30		
11	21	12	.62	34	10	2.6	.94	.71	.27	.27		
12	1.9	4.7	.54	36	17	2.1	.94	.64	.27	.27		
13	.69	18	.46	6.1	8.8	2.1	1.4	.62	.27	.27		
14	4.6	12	.46	4.2	22	1.9	.86	.70	.27	.27		
15	4.1	26	.46	3.7	7.9	1.6	.86	.71	.24	.27		
16	6.4	11	3.0	72	5.2	1.6	.86	.64	.24	.27		
17	1.8	1.9	12	28	3.4	2.0	.86	.64	.24	.27		
18	.72	1.6	8.1	18	2.8	1.5	.78	.69	.24	--		
19	.54	2.4	5.9	9.0	2.4	7.5	.70	.62	.24	--		
20	.38	.86	1.7	5.5	2.3	2.0	.70	.62	.24	--		
21	.38	.70	1.2	7.2	2.3	3.4	.70	.69	.24	--		
22	.38	.62	3.2	3.9	2.0	1.4	.70	.58	.24	--		
23	.30	.54	1.2	3.4	2.0	1.2	.70	.54	.24	--		
24	.30	.54	1.1	4.5	2.8	1.1	.70	.54	.24	--		
25	.27	.46	.92	4.8	1.9	1.1	.70	.54	.27	--		
26	.27	.46	.86	2.6	13	1.1	.70	.46	.30	--		
27	.27	.46	1.2	2.4	21	1.1	.70	.46	.30	--		
28	.27	.38	.81	2.3	4.5	1.1	.62	.46	.30	--		
29	.27	.38	.78	5.0	------	1.1	.62	.54	.30	--		
30	.27	.30	.75	3.9	------	9.8	.62	.46	.30	--		
31	.38	------	.70	3.2	------	2.0	------	.46	------	--		------
TOTAL	56.44	143.95	58.40	308.64	209.0	93.9	26.56	18.09	8.59	--	--	--
MEAN	1.82	4.80	1.88	9.96	7.46	3.03	.89	.58	.29	--	--	--
MAX	21	26	12	72	22	9.8	1.4	.71	.46	--	--	--
MIN	.24	.30	.30	.62	1.5	1.1	.62	.46	.24	--	--	--
AC-FT	112	286	116	612	415	186	53	36	17	--	--	--

PEAK DISCHARGE (BASE, 130 CFS)

DATE	TIME	G.H.	DISCHARGE	DATE	TIME	G.H.	DISCHARGE
10-11	0700	3.47	143	1-12	0430	4.94	253
11-10	2355	4.00	180	1-16	0910	8.07	537
11-15	1855	4.65	230	2-9	2125	5.29	281
1-9	0830	4.04	183	2-27	1425	4.07	185

11181400 WILDCAT CREEK AT RICHMOND, CALIF.

LOCATION.--Lat 37°57'41", long 122°21'33", in San Pablo Grant, Contra Costa County, on left bank 200 ft downstream from Southern Pacific Railway bridge at east city limits of Richmond, and 2 miles upstream from mouth.

DRAINAGE AREA.--8.69 sq mi.

PERIOD OF RECORD.--July 1964 to current year.

GAGE.--Water-stage recorder. Datum of gage is 20.62 ft above mean sea level.

AVERAGE DISCHARGE.--9 years, 5.16 cfs (3,740 acre-ft per year).

EXTREMES.--Current year: Maximum discharge, 725 cfs Jan. 16 (gage height, 10.30 ft); no flow many days.
Period of record: Maximum discharge, 776 cfs (revised) Jan. 21, 1970 (gage height, 9.90 ft); maximum gage height, 10.30 ft Jan. 16, 1973; no flow many days in each year.
REVISIONS.--The maximum discharge for the water year 1970 has been revised to 776 cfs Jan. 21, 1970 (gage height, 9.90 ft), superseding figure published in WRD Calif. 1970.

REMARKS.--Records good. Minor storage in Lake Anza and Jewel Lake. No diversion above station.

REVISIONS.--The figures of peak discharge for the water year 1970 have been revised as shown in the following table. They supersede figures published in WRD Calif. 1970.
REVISED PEAK DISCHARGE.--1970: Jan. 14 (1015) 653 cfs (9.63 ft); Jan. 21 (1015) 776 cfs (9.90 ft).

DISCHARGE, IN CUBIC FEET PER SECOND, WATER YEAR OCTOBER 1972 TO SEPTEMBER 1973

DAY	OCT	NOV	DEC	JAN	FEB	MAR	APR	MAY	JUN	JUL	AUG	SEP
1	0	0	.72	1.3	11	23	5.3	1.1	.60	0	0	0
2	0	0	.70	1.1	9.3	17	4.6	1.1	.60	0	0	0
3	0	8.2	2.4	1.1	20	22	4.3	1.0	.60	0	0	0
4	0	17	1.4	1.1	29	20	3.8	1.0	.60	0	0	0
5	0	1.0	.93	1.1	17	13	3.7	1.0	.50	0	0	0
6	0	.30	8.0	1.1	79	33	3.6	1.0	.50	0	0	0
7	0	.94	4.0	1.1	48	19	3.4	1.0	.50	0	0	0
8	0	1.1	1.9	22	28	25	3.2	1.0	.40	0	0	0
9	27	1.9	1.2	160	55	15	3.1	1.0	.40	0	0	0
10	3.6	36	1.0	36	82	14	2.9	1.0	.40	0	0	0
11	31	34	.87	131	49	15	2.4	.90	.40	0	.19	0
12	7.0	19	.79	295	38	11	2.4	.90	.30	0	.32	0
13	.95	49	.79	41	37	9.2	2.8	.90	.30	0	.20	0
14	8.2	78	.78	18	52	8.3	2.4	.90	.30	0	0	0
15	21	24	.75	17	33	7.7	2.3	.90	.30	0	0	0
16	7.7	31	3.5	261	24	7.1	2.3	.90	.30	0	0	0
17	4.7	5.8	31	71	20	7.3	2.2	.90	.20	0	0	0
18	1.3	4.2	21	300	18	6.3	2.1	.90	.20	0	0	0
19	.69	4.3	39	46	16	21	2.0	.90	.20	.58	0	0
20	.26	2.2	9.8	34	14	18	1.8	.90	.20	.32	0	1.2
21	.25	1.9	5.6	28	13	15	1.8	.80	.10	.03	0	.50
22	.09	1.7	7.5	20	12	9.8	1.5	.80	.05	0	0	.53
23	.16	1.5	4.1	14	11	7.7	1.4	.80	0	0	0	.31
24	.07	2.3	3.4	13	15	6.9	1.4	.80	0	0	0	.20
25	.01	1.2	2.7	14	14	6.3	1.3	.80	0	0	0	0
26	0	.97	2.2	10	35	6.0	1.3	.80	0	.23	0	0
27	0	.91	2.3	8.7	85	5.7	1.2	.80	0	.20	0	0
28	0	.81	2.1	7.7	41	5.3	1.3	.70	0	.16	0	0
29	0	.68	1.7	18	------	5.2	1.2	.70	0	.10	0	0
30	0	.81	1.5	34	------	8.0	1.2	.70	0	0	0	0
31	0	------	1.3	15	------	8.0	------	.70	------	0	0	------
TOTAL	113.98	330.22	164.93	1,622.3	905.3	395.8	74.2	27.60	7.95	1.62	.71	2.74
MEAN	3.68	11.0	5.32	52.3	32.3	12.8	2.47	.89	.27	.052	.023	.091
MAX	31	78	39	300	85	33	5.3	1.1	.60	.58	.32	1.2
MIN	0	0	.70	1.1	9.3	5.2	1.2	.70	0	0	0	0
AC-FT	226	655	327	3,220	1,800	785	147	55	16	3.2	1.4	5.4

CAL YR 1972 TOTAL 692.99 MEAN 1.89 MAX 78 MIN 0 AC-FT 1,370
WTR YR 1973 TOTAL 3,647.35 MEAN 9.99 MAX 300 MIN 0 AC-FT 7,230

PEAK DISCHARGE (BASE, 150 CFS)

DATE	TIME	G.H.	DISCHARGE	DATE	TIME	G.H.	DISCHARGE
11-10	unknown	--	200	1-18	1000	9.52	642
11-14	unknown	6.6	284	2-6	1145	5.56	153
1-9	1200	7.00	340	2-9	2245	7.07	351
1-12	0815	10.00	690	2-27	1630	6.35	251
1-16	0930	10.30	725				

11182030 RHEEM CREEK AT SAN PABLO, CALIF.

LOCATION.--Lat 37°58'38", long 122°21'10", in San Pablo Grant, Contra Costa County, on left bank 50 ft downstream from Santa Fe Railway bridge at San Pablo, and 0.7 mile upstream from mouth.

DRAINAGE AREA.--1.49 sq mi.

PERIOD OF RECORD.--December 1960 to current year.

GAGE.--Water-stage recorder. Datum of gage is 13.63 ft above mean sea level (Corps of Engineers bench mark). Prior to Aug. 13, 1965, at site 0.2 mile upstream at datum 7.74 ft higher.

AVERAGE DISCHARGE.--12 years (1961-73), 1.43 cfs (1,040 acre-ft per year).

EXTREMES.--Current year: Maximum discharge, 353 cfs Jan. 16 (gage height, 6.32 ft), from rating curve extended above 150 cfs; minimum daily, 0.02 cfs Sept. 4, 8, 9, 11, 15-19.
Period of record: Maximum discharge, 477 cfs Dec. 20, 1969 (gage height, 6.95 ft), from rating curve extended above 150 cfs; no flow at times.

REMARKS.--Records good. Low flow affected by return flow from industrial waste, leakage, and infrequent releases from off-stream North Reservoir.

DISCHARGE, IN CUBIC FEET PER SECOND, WATER YEAR OCTOBER 1972 TO SEPTEMBER 1973

DAY	OCT	NOV	DEC	JAN	FEB	MAR	APR	MAY	JUN	JUL	AUG	SEP
1	.03	.08	.10	.12	.78	1.0	.12	.20	.11	.14	.70	.10
2	.39	.08	.03	.17	.86	.59	.14	.24	.11	.22	.49	.10
3	.10	5.2	2.2	.14	11	6.2	.12	.29	.10	.46	.73	.06
4	.10	3.7	1.0	.14	9.2	1.4	.14	.47	.13	.29	.47	.02
5	.14	.06	.35	.12	3.1	.61	.17	.20	.12	.25	.38	.04
6	.10	.03	9.7	.08	30	11	.12	.24	.16	.26	.40	.04
7	.08	1.2	6.8	.06	16	4.8	.12	.29	.15	.29	.47	.06
8	.08	.10	.63	19	2.3	2.6	.14	.20	.17	.29	.40	.02
9	22	2.0	.29	30	19	.70	.14	.24	.13	.36	.63	.02
10	2.9	26	.24	2.8	22	.79	.14	.24	.12	.34	.72	.03
11	16	3.6	.24	37	6.5	.47	.12	.29	.07	.39	.34	.02
12	3.8	.26	.24	54	6.9	.36	.12	.17	.11	.46	.24	.03
13	.55	26	.17	3.3	4.3	.28	.59	.17	.08	.42	.34	.03
14	6.9	26	.17	1.6	14	.24	.20	.29	.10	.35	.40	.04
15	20	14	.14	4.0	3.3	.21	.17	.17	.13	.34	.47	.02
16	8.2	6.4	5.2	72	1.3	.19	.20	.17	.09	.47	.47	.02
17	3.4	2.1	19	15	.91	.63	.20	.22	.09	.40	.47	.02
18	.55	.71	10	51	.72	.18	.17	.17	.18	.47	.29	.02
19	.40	1.4	5.7	3.4	.63	11	.17	.11	.16	.29	.24	.02
20	.34	.57	1.2	1.8	.55	1.0	.14	.15	.24	.34	.20	1.5
21	.29	.38	1.1	2.5	.47	3.2	.17	.17	.37	.34	.24	.04
22	.29	.22	2.5	.97	.47	.29	.17	.13	.16	.29	.20	.62
23	.24	.17	.34	.88	.40	.17	.14	.16	.10	.47	.29	.08
24	.20	.16	.34	2.3	2.4	.17	.17	.25	.10	.40	.40	.03
25	.14	.13	.24	1.8	.55	.14	.24	.15	.22	.55	.40	.04
26	.12	.11	.24	.69	13	.20	.24	.15	.23	.47	.20	.03
27	.10	.14	.78	.55	29	.14	.20	.15	.20	.63	.17	.04
28	.08	.12	.24	.55	3.4	.12	.14	.18	.42	.40	.20	.10
29	.04	.10	.24	7.6	------	.12	.20	.18	.16	.34	.14	.08
30	.08	.08	.17	6.4	------	4.0	.24	.11	.12	.47	.55	.10
31	.06	------	.14	1.1	------	.20	------	.13	------	.58	.17	------
TOTAL	87.70	121.10	69.73	321.07	203.04	53.00	5.34	6.28	4.63	11.77	11.81	3.37
MEAN	2.83	4.04	2.25	10.4	7.25	1.71	.18	.20	.15	.38	.38	.11
MAX	22	26	19	72	30	11	.59	.47	.42	.63	.73	1.5
MIN	.03	.03	.03	.06	.40	.12	.12	.11	.07	.14	.14	.02
AC-FT	174	240	138	637	403	105	11	12	9.2	23	23	6.7

CAL YR 1972 TOTAL 385.79 MEAN 1.05 MAX 26 MIN .02 AC-FT 765
WTR YR 1973 TOTAL 898.84 MEAN 2.46 MAX 72 MIN .02 AC-FT 1,780

PEAK DISCHARGE (BASE, 150 CFS)

DATE	TIME	G.H.	DISCHARGE	DATE	TIME	G.H.	DISCHARGE
10-9	2100	4.72	174	1-16	0745	6.32	353
11-10	2145	5.28	225	1-18	0645	6.10	324
11-14	0030	5.76	298	2-9	2100	5.22	217
1-9	0830	5.12	206	2-27	1445	4.71	173
1-12	0500	5.25	221				

11182100 PINOLE CREEK AT PINOLE, CALIF.

LOCATION.--Lat 37°58'21", long 122°14'43", in Pinole Grant, Contra Costa County, on left bank 0.2 mile downstream from county bridge on Pinole Valley Road, 0.8 mile upstream from Pinole city boundary.

DRAINAGE AREA.--10.0 sq mi.

PERIOD OF RECORD.--December 1938 to current year. Monthly discharge only for water years 1939-59, published in WSP 1735.

GAGE.--Water-stage recorder and concrete control. Altitude of gage is 170 ft (from topographic map).

AVERAGE DISCHARGE.--34 years (1939-73), 3.85 cfs (2,790 acre-ft per year).

EXTREMES.--Current year: Maximum discharge, 871 cfs Jan. 18 (gage height, 7.59 ft); no flow many days.
Period of record: Maximum discharge, 1,660 cfs Apr. 2, 1958 (gage height, 11.63 ft); no flow at times.

REMARKS.--No storage or diversion above station except for minor stock ponds; some inflow from ground-water withdrawals during irrigation season.

COOPERATION.--Records furnished by East Bay Municipal Utility District and reviewed by Geological Survey.

REVISIONS (WATER YEARS).--WRD Calif. 1972: 1970.

DISCHARGE, IN CUBIC FEET PER SECOND, WATER YEAR OCTOBER 1972 TO SEPTEMBER 1973

DAY	OCT	NOV	DEC	JAN	FEB	MAR	APR	MAY	JUN	JUL	AUG	SEP
1		0	.09	.21	6.3	24	4.4	1.8	.75	.27	.27	.13
2		0	.09	.17	5.9	18	4.3	1.6	.80	.19	.27	.10
3		0	.10	.15	13	29	4.1	1.6	.71	.04	.27	.09
4		0	.10	.14	19	20	4.2	1.6	.70	.17	.33	.10
5		0	.10	.13	9.6	15	4.2	1.6	.70	.14	.29	.13
6		0	.76	.13	125	41	4.2	1.5	.58	.07	.14	.16
7		0	.58	.15	40	16	4.0	1.4	.52	.02	.18	.13
8		0	.44	68	19	18	4.0	1.3	.56	.04	.25	.08
9		0	.14	152	58	10	4.0	1.3	.51	.06	.25	.04
10		.12	.10	10	69	11	4.0	1.3	.41	.08	.17	.04
11		1.6	.09	86	44	10	3.7	1.1	.63	.06	.13	.06
12		.08	.10	195	36	7.9	3.6	1.1	.72	.12	.13	.12
13		.66	.12	22	36	6.8	4.6	1.1	.67	.14	.15	.12
14		3.7	.09	8.3	40	9.1	4.1	1.1	.52	.20	.09	.13
15		9.4	.09	5.6	45	8.6	3.6	1.0	.60	.27	.04	.14
16		18	.16	224	15	8.6	3.6	.87	.53	.31	.04	.16
17		3.8	4.9	100	13	7.2	3.5	.88	.60	.27	.03	.16
18		1.3	6.1	337	11	6.3	3.1	.82	.55	.31	.03	.14
19		.17	7.1	69	10	20	3.1	.86	.48	.27	.05	.17
20		.10	1.6	23	9.0	10	2.8	.90	.39	.21	.05	.37
21		.08	.90	17	7.9	9.1	2.6	.97	.33	.19	.04	.27
22		.06	2.4	11	7.2	6.3	2.6	.83	.35	.21	.02	.21
23		.06	.90	8.3	6.8	5.9	2.6	.82	.46	.14	.06	.29
24		.05	.60	7.2	9.1	6.3	2.6	1.0	.46	.10	.08	.21
25		.04	.42	7.9	7.2	5.9	2.3	.99	.35	.09	.10	.17
26		.04	.31	6.1	29	5.5	2.3	.79	.27	.04	.12	.12
27		.05	.31	5.6	200	4.7	2.3	.75	.23	.05	.14	.07
28		.04	.29	5.2	68	4.6	2.2	.73	.23	.09	.15	.06
29		.04	.27	22	------	4.5	2.1	.64	.25	.12	.08	.06
30		.05	.25	28	------	5.4	2.1	.64	.27	.12	.06	.08
31		------	.23	9.0	------	5.2	------	.74	------	.12	.12	------
TOTAL	0	39.44	29.73	1,428.28	979.0	359.9	100.8	33.63	15.23	4.51	4.13	4.11
MEAN	0	1.31	.96	46.1	35.0	11.6	3.36	1.08	.51	.15	.13	.14
MAX	0	18	7.1	337	200	41	4.6	1.8	.80	.31	.33	.37
MIN	0	0	.09	.13	5.9	4.5	2.1	.64	.23	.02	.02	.04
AC-FT	0	78	59	2,830	1,940	714	200	67	30	8.9	8.2	8.2

CAL YR 1972 TOTAL 129.54 MEAN .35 MAX 18 MIN 0 AC-FT 257
WTR YR 1973 TOTAL 2,998.76 MEAN 8.22 MAX 337 MIN 0 AC-FT 5,950

PEAK DISCHARGE (BASE, 200 CFS)

DATE	TIME	G.H.	DISCHARGE	DATE	TIME	G.H.	DISCHARGE
1-9	0100	4.87	393	2-6	1200	4.96	408
1-12	0800	5.23	454	2-9	2300	5.15	440
1-16	0930	6.10	603	2-27	unknown	--	500
1-18	0900	7.59	871				

11182400 ARROYO DEL HAMBRE AT MARTINEZ, CALIF.

LOCATION.--Lat 38°00'12", long 122°07'44", in Las Juntas Grant, Contra Costa County, on right bank 40 ft upstream from D Street Bridge in Martinez.

DRAINAGE AREA.--15.1 sq mi.

PERIOD OF RECORD.--October 1964 to current year.

GAGE.--Water-stage recorder and concrete control. Datum of gage is 48.33 ft above mean sea level (levels by Contra Costa County Flood Control District).

AVERAGE DISCHARGE.--9 years, 4.55 cfs (3,300 acre-ft per year).

EXTREMES.--Current year: Maximum discharge, 1,960 cfs Jan. 18 (gage height, 10.93 ft), from rating curve extended as explained below; minimum daily, 0.02 cfs Oct. 3, 6.
Period of record: Maximum discharge, 1,960 cfs Jan. 18, 1973 (gage height, 10.93 ft), from rating curve extended above 540 cfs on basis of slope-area measurement at gage height 9.62 ft; no flow at times.

REMARKS.--Records good. No regulation or diversion above station.

REVISIONS (WATER YEARS).--WRD Calif. 1969: 1967(M).

DISCHARGE, IN CUBIC FEET PER SECOND, WATER YEAR OCTOBER 1972 TO SEPTEMBER 1973

DAY	OCT	NOV	DEC	JAN	FEB	MAR	APR	MAY	JUN	JUL	AUG	SEP
1	.04	.11	.24	.60	8.8	24	6.9	2.8	1.0	.32	.12	.09
2	.03	.12	.06	.60	8.6	21	6.7	2.8	1.0	.41	.13	.08
3	.02	2.4	.03	.61	15	29	6.6	2.8	1.0	.41	.12	.07
4	.03	3.2	.16	.55	15	24	6.3	2.7	.90	.47	.13	.08
5	.03	.14	.23	.53	13	18	6.3	2.5	.90	.33	.15	.09
6	.02	.14	4.4	.53	131	36	6.3	2.4	.90	.32	.21	.08
7	.03	.44	2.3	.53	38	20	6.0	2.3	.80	.36	.17	.07
8	.05	.12	.60	22	20	22	5.8	2.2	.80	.26	.16	.07
9	1.1	.52	.38	143	48	17	5.8	2.0	.80	.24	.14	.07
10	.23	11	.34	16	61	16	5.8	2.0	.80	.23	.13	.07
11	8.2	8.1	.32	56	33	16	5.5	2.1	.80	.26	.12	.07
12	.39	.39	.32	154	30	14	5.2	1.9	.80	.33	.13	.07
13	.05	7.9	.31	23	29	14	7.0	1.9	.70	.36	.13	.07
14	3.2	14	.29	12	39	13	4.6	1.9	.70	.48	.13	.07
15	1.4	27	.28	9.3	22	13	4.4	1.8	.70	.38	.13	.07
16	2.2	16	2.3	223	18	12	4.4	1.8	.70	.41	.10	.06
17	1.9	2.8	9.5	76	17	11	4.1	1.8	.70	.43	.11	.06
18	1.0	.68	8.6	405	15	10	4.0	1.7	.60	.51	.10	.06
19	.16	.49	8.2	50	14	22	3.9	1.7	.60	.53	.10	.06
20	.10	.32	2.6	27	14	14	3.8	1.6	.60	.47	.08	.30
21	.10	.24	1.7	24	13	12	3.5	1.5	.58	.57	.08	.10
22	.10	.21	2.8	18	12	10	3.5	1.6	.67	.48	.08	.10
23	.10	.20	1.5	15	12	9.4	3.4	1.4	.77	.42	.09	.08
24	.10	.25	1.2	13	14	9.6	3.3	1.6	.78	.33	.11	.06
25	.10	.29	.95	12	12	9.4	3.2	2.7	.56	.11	.12	.06
26	.10	.25	.85	10	27	9.0	3.1	1.3	.82	.11	.12	.06
27	.10	.11	.97	9.4	169	8.0	3.1	1.2	.51	.13	.12	.06
28	.10	.08	.85	8.9	50	7.7	3.0	1.2	.42	.11	.10	.06
29	.10	.05	.69	19	------	7.7	3.1	1.2	.39	.10	.08	.06
30	.10	.13	.64	19	------	8.8	3.0	1.0	.35	.11	.08	.06
31	.10	------	.60	10	------	7.8	------	1.0	------	.09	.09	------
TOTAL	21.28	97.68	54.21	1,378.55	898.4	465.4	141.6	58.4	21.65	10.07	3.66	2.36
MEAN	.69	3.26	1.75	44.5	32.1	15.0	4.72	1.88	.72	.32	.12	.079
MAX	8.2	27	9.5	405	169	36	7.0	2.8	1.0	.57	.21	.30
MIN	.02	.05	.03	.53	8.6	7.7	3.0	1.0	.35	.09	.08	.06
AC-FT	42	194	108	2,730	1,780	923	281	116	43	20	7.3	4.7

CAL YR 1972 TOTAL 266.26 MEAN .73 MAX 27 MIN 0 AC-FT 528
WTR YR 1973 TOTAL 3,153.26 MEAN 8.64 MAX 405 MIN .02 AC-FT 6,250

PEAK DISCHARGE (BASE, 150 CFS)

DATE	TIME	G.H.	DISCHARGE	DATE	TIME	G.H.	DISCHARGE
1-9	1045	4.63	424	2-6	1200	4.85	472
1-12	0930	4.95	494	2-9	2315	4.21	331
1-16	0930	7.61	1,120	2-27	1615	7.85	1,180
1-18	0830	10.93	1,960				

11182500 SAN RAMON CREEK AT SAN RAMON, CALIF.

LOCATION.--Lat 37°46'23", long 121°59'37", in sec.8, T.2 S., R.1 W., Contra Costa County, on right bank 0.2 mile downstream from Bollinger Creek, and 1.0 mile southwest of San Ramon.

DRAINAGE AREA.--5.89 sq mi.

PERIOD OF RECORD.--October 1952 to current year.

GAGE.--Water-stage recorder and concrete control. Altitude of gage is 530 ft (from topographic map).

AVERAGE DISCHARGE.--21 years, 2.86 cfs (2,070 acre-ft per year).

EXTREMES.--Current year: Maximum discharge, 506 cfs Jan. 16 (gage height, 5.76 ft), from rating curve extended as explained below; no flow many days.
Period of record: Maximum discharge, 1,600 cfs Oct. 13, 1962 (gage height, 16.98 ft), from rating curve extended above 90 cfs on basis of indirect measurements of maximum flow through culvert at gage heights 12.09 and 16.98 ft; no flow for parts of each year.

REMARKS.--Records good. No regulation or diversion above station.

REVISIONS (WATER YEARS).--WSP 1445: 1953-54(P).

DISCHARGE, IN CUBIC FEET PER SECOND, WATER YEAR OCTOBER 1972 TO SEPTEMBER 1973

DAY	OCT	NOV	DEC	JAN	FEB	MAR	APR	MAY	JUN	JUL	AUG	SEP
1	0	0	.29	.63	6.1	19	7.1	2.2	.63	.50	.05	.02
2	0	0	.29	.63	6.4	16	6.6	2.1	.56	.50	.03	.02
3	0	.02	.32	.63	7.7	26	6.1	2.1	.56	.44	.04	.02
4	0	1.6	.54	.60	7.5	18	5.7	2.1	.56	.44	.02	.02
5	0	.06	.34	.56	7.3	15	5.4	1.9	.50	.44	.02	.02
6	0	.02	1.3	.57	56	31	5.2	1.8	.50	.38	.10	.05
7	0	.14	.91	.57	20	19	5.0	1.8	.44	.42	.18	.07
8	0	.14	.59	7.4	13	19	4.6	1.7	.37	.41	.19	.03
9	0	.04	.45	72	26	15	4.4	1.7	.33	.33	.21	.01
10	0	1.5	.43	12	35	21	4.2	1.7	.33	.24	.20	.01
11	0	1.8	.44	43	22	16	4.0	1.5	.33	.25	.14	.01
12	0	.31	.39	85	22	13	3.8	1.4	.33	.27	.10	.01
13	0	.86	.36	19	21	12	3.7	1.3	.25	.22	.15	.01
14	0	3.4	.34	11	29	11	3.6	1.3	.33	.24	.09	.02
15	0	12	.37	8.1	17	11	3.5	1.3	.33	.27	.02	.03
16	.01	4.5	.44	96	15	10	3.4	1.2	.33	.29	0	.13
17	0	.92	2.9	36	13	9.9	3.3	1.1	.35	.28	.01	.16
18	0	.61	1.8	117	12	9.3	3.2	1.1	.33	.28	.01	.17
19	0	.57	4.9	36	10	18	3.1	.98	.33	.29	0	.17
20	0	.48	1.4	20	9.8	14	3.0	.98	.33	.29	0	.24
21	0	.38	5.5	19	8.6	13	3.0	.98	.33	.29	0	.29
22	0	.35	3.4	13	8.1	10	2.9	.88	.33	.28	0	.20
23	0	.33	1.6	11	7.7	9.0	2.8	.88	.33	.25	0	.42
24	0	.33	1.2	9.8	7.3	8.4	2.7	.88	.38	.25	.02	.29
25	0	.33	.92	9.8	6.7	8.0	2.6	.88	.44	.23	.08	.27
26	0	.33	.81	8.1	19	7.6	2.5	.88	.44	.16	.13	.14
27	0	.33	.80	7.7	83	7.2	2.5	.88	.44	.13	.14	.05
28	0	.37	.82	7.0	30	6.8	2.4	.78	.44	.15	.12	.01
29	0	.33	.71	10	------	6.6	2.3	.71	.44	.13	.05	.01
30	0	.33	.63	9.4	------	12	2.3	.70	.50	.14	.02	.01
31	0	------	.63	9.0	------	9.7	------	.63	------	.10	.02	------
TOTAL	.01	32.38	35.82	680.49	526.2	421.5	114.9	40.34	12.09	8.89	2.14	2.91
MEAN	.0003	1.08	1.16	22.0	18.8	13.6	3.83	1.30	.40	.29	.069	.097
MAX	.01	12	5.5	117	83	31	7.1	2.2	.63	.50	.21	.42
MIN	0	0	.29	.56	6.1	6.6	2.3	.63	.25	.10	0	.01
AC-FT	.02	64	71	1,350	1,040	836	228	80	24	18	4.2	5.8

CAL YR 1972 TOTAL 125.09 MEAN .34 MAX 12 MIN 0 AC-FT 248
WTR YR 1973 TOTAL 1,877.67 MEAN 5.14 MAX 117 MIN 0 AC-FT 3,720

PEAK DISCHARGE (BASE, 100 CFS)

DATE	TIME	G.H.	DISCHARGE	DATE	TIME	G.H.	DISCHARGE
12-21	0800	4.82	373	2-9	2315	3.96	239
1-9	1115	3.71	199	2-14	1015	3.04	102
1-12	0845	3.73	202	2-27	1630	5.16	422
1-16	1030	5.76	506	3-6	1200	3.02	100
2-6	1130	3.48	164				

11183000 SAN RAMON CREEK AT WALNUT CREEK, CALIF.

LOCATION.--Lat 37°52'38", long 122°02'52", in San Ramon Grant, Contra Costa County, on left bank 600 ft upstream from Rudgear Road, near south city limits of town of Walnut Creek.

DRAINAGE AREA.--47.9 sq mi. Area at site used prior to Dec. 8, 1971, 50.8 sq mi.

PERIOD OF RECORD.--October 1952 to current year.

GAGE.--Water-stage recorder. Concrete control since Dec. 4, 1962. Datum of gage is 146.4 ft above mean sea level (levels by Corps of Engineers). Prior to Dec. 8, 1971, at site 0.6 mile downstream at different datum.

AVERAGE DISCHARGE.--21 years, 15.7 cfs (11,370 acre-ft per year).

EXTREMES.--Current year: Maximum discharge, 4,550 cfs Feb. 27 (gage height, 7.37 ft), from rating curve extended above 670 cfs; minimum daily, 0.82 cfs Oct. 7, 8.
Period of record: Maximum discharge, 7,980 cfs Jan. 31, 1963 (gage height, 14.40 ft, site and datum then in use), from rating curve extended above 2,200 cfs on basis of computed discharge at gage height 13.16 ft; maximum gage height, 14.55 ft Dec. 23, 1955, site and datum then in use; no flow at times in most years.

REMARKS.--Records good. No regulation; pumping for irrigation above station during periods of low flow.

REVISIONS (WATER YEARS).--WSP 1395: 1953(M).

DISCHARGE, IN CUBIC FEET PER SECOND, WATER YEAR OCTOBER 1972 TO SEPTEMBER 1973

DAY	OCT	NOV	DEC	JAN	FEB	MAR	APR	MAY	JUN	JUL	AUG	SEP
1	1.2	.92	3.5	3.2	25	70	22	8.6	6.5	4.4	3.0	2.8
2	1.3	.92	3.5	3.4	20	56	20	9.5	6.5	4.3	3.3	2.8
3	1.2	1.9	3.8	3.4	29	126	18	7.4	6.3	4.4	3.2	2.8
4	1.2	41	3.8	3.4	36	77	19	6.6	5.8	4.2	3.3	2.6
5	1.1	6.0	3.8	3.2	27	51	17	6.6	5.1	4.0	3.4	2.6
6	1.0	2.9	25	3.2	609	194	18	6.9	4.4	4.2	3.5	2.6
7	.82	7.2	11	3.2	133	60	18	6.3	4.0	4.0	4.4	2.5
8	.82	6.6	7.4	121	62	103	17	6.3	3.9	4.0	3.8	2.5
9	1.3	3.2	3.6	758	100	49	16	6.0	3.9	4.2	4.2	2.5
10	1.5	42	3.1	76	312	60	16	6.0	3.8	5.2	5.4	2.4
11	32	49	2.8	276	176	58	15	6.0	4.0	5.0	4.3	2.4
12	8.4	6.9	2.8	474	111	40	14	5.6	3.9	4.8	3.4	2.4
13	6.9	33	2.8	68	118	34	16	5.6	4.0	5.0	3.2	2.4
14	12	87	2.6	36	132	32	14	5.4	4.2	4.8	3.2	2.4
15	10	118	2.5	26	68	30	13	5.4	4.6	5.0	3.0	2.5
16	7.2	86	2.9	885	54	30	13	5.4	4.8	4.8	3.0	2.5
17	9.9	12	38	225	47	29	13	5.4	4.8	5.5	3.0	2.5
18	4.2	6.6	22	1,040	40	27	13	5.4	5.1	5.5	3.0	2.5
19	2.8	4.8	32	126	37	89	12	5.8	5.3	5.2	3.0	3.0
20	1.9	4.0	11	59	34	82	11	7.0	5.1	5.2	3.0	3.0
21	2.0	3.6	7.2	64	32	59	11	7.0	5.1	5.5	3.0	3.5
22	1.6	3.8	22	40	30	36	11	7.0	4.8	4.8	3.0	4.0
23	1.3	3.4	9.9	31	28	29	11	6.5	4.9	4.4	3.0	5.0
24	1.5	3.1	6.9	27	30	25	10	7.0	5.0	4.2	3.0	4.5
25	1.2	2.9	5.5	32	25	25	10	7.0	4.8	4.0	3.0	4.0
26	1.2	2.9	5.2	29	112	24	10	6.8	5.2	3.8	3.0	3.5
27	1.0	3.6	5.8	22	895	23	9.4	6.5	5.0	3.8	3.0	3.0
28	1.2	3.6	6.0	19	167	23	10	6.5	5.0	3.8	3.0	2.7
29	1.2	3.6	4.6	20	------	22	9.4	6.8	4.6	3.4	3.0	2.6
30	1.0	3.5	4.8	56	------	30	9.2	6.3	4.4	2.8	3.0	2.4
31	1.2	------	3.8	45	------	31	------	6.0	------	2.8	3.0	------
TOTAL	121.14	553.94	269.6	4,578.0	3,489	1,624	416.0	200.6	144.8	137.0	102.6	86.9
MEAN	3.91	18.5	8.70	148	125	52.4	13.9	6.47	4.83	4.42	3.31	2.90
MAX	32	118	38	1,040	895	194	22	9.5	6.5	5.5	5.4	5.0
MIN	.82	.92	2.5	3.2	20	22	9.2	5.4	3.8	2.8	3.0	2.4
AC-FT	240	1,100	535	9,080	6,920	3,220	825	398	287	272	204	172

CAL YR 1972 TOTAL 1,778.68 MEAN 4.86 MAX 118 MIN .82 AC-FT 3,530
WTR YR 1973 TOTAL 11,723.58 MEAN 32.1 MAX 1,040 MIN .82 AC-FT 23,250

PEAK DISCHARGE (BASE, 500 CFS)

DATE	TIME	G.H.	DISCHARGE	DATE	TIME	G.H.	DISCHARGE
11-15	2000	3.72	564	2-6	1230	5.56	1,930
1-9	1400	5.05	1,430	2-10	0115	5.09	1,460
1-12	0900	4.70	1,140	2-27	1645	7.37	4,550
1-16	1000	--	3,650	3-6	1315	3.95	670
1-18	1030	--	3,060				

NOTE.--No gage-height record May 8 to June 20, Aug. 13 to Sept. 27.

11183600 WALNUT CREEK AT CONCORD, CALIF.

LOCATION.--Lat 37°56'43", long 122°02'55", in Arroyo de las Nueces y Bolbones Grant, Contra Costa County, on right bank at southwest city limits of Concord, 0.2 mile upstream from Southern Pacific Railroad bridge, and 3.8 miles downstream from confluence of San Ramon and Las Trampas Creeks.

DRAINAGE AREA.--85.1 sq mi.

PERIOD OF RECORD.--October 1968 to current year.

GAGE.--Water-stage recorder and concrete control. Datum of gage is 35.44 ft above mean sea level (Corps of Engineers bench mark).

AVERAGE DISCHARGE.--5 years, 47.7 cfs (34,560 acre-ft per year).

EXTREMES.--Current year: Maximum discharge, 8,000 cfs Feb. 27 (gage height, 14.0 ft, estimated), from rating curve extended as explained below; minimum daily, 3.0 cfs Oct. 27, 28, Oct. 30 to Nov. 1.
Period of record: Maximum discharge, 8,000 cfs Feb. 27, 1973 (gage height, 14.0 ft, estimated), from rating curve extended above 2,500 cfs on basis of computed discharge at gage height 13.7 ft; minimum daily, 3.0 cfs Oct. 27, 28, Oct. 30 to Nov. 1, 1972.

REMARKS.--Records good. Flow slightly regulated by Lafayette Reservoir 10 miles upstream (capacity, 4,240 acre-ft). Some small diversions for irrigation above station.

DISCHARGE, IN CUBIC FEET PER SECOND, WATER YEAR OCTOBER 1972 TO SEPTEMBER 1973

DAY	OCT	NOV	DEC	JAN	FEB	MAR	APR	MAY	JUN	JUL	AUG	SEP
1	4.0	3.0	10	7.5	46	194	46	43	13	9.2	8.0	8.2
2	5.2	3.3	15	8.0	42	185	43	32	13	9.4	7.9	8.7
3	4.3	20	10	8.4	70	273	41	24	13	9.9	7.7	8.3
4	4.0	112	10	9.3	86	187	39	20	12	10	9.4	7.7
5	3.4	12	10	8.6	65	137	36	19	12	10	9.6	7.5
6	3.9	7.3	60	8.7	1,200	349	36	19	12	9.7	14	8.1
7	8.9	19	39	8.7	281	130	34	18	12	9.4	11	8.2
8	6.1	10	19	273	150	193	32	18	11	9.1	11	7.8
9	34	6.1	9.8	1,610	293	102	32	18	11	9.7	13	7.8
10	34	112	8.8	163	635	118	33	18	9.5	9.6	21	7.9
11	134	120	8.1	547	321	121	31	18	9.9	9.7	12	8.3
12	24	12	9.1	1,070	234	86	29	17	9.8	8.9	11	7.9
13	10	101	8.9	162	239	78	44	18	11	8.8	12	7.3
14	49	176	8.8	85	295	70	31	18	11	8.6	9.4	7.5
15	31	350	7.5	62	147	63	29	18	11	8.3	8.4	8.4
16	29	250	16	1,830	114	63	28	19	11	8.6	8.4	8.2
17	29	25	117	458	99	61	28	20	11	9.3	8.2	8.4
18	7.0	15	57	2,130	88	58	27	21	11	8.7	8.3	8.2
19	5.2	12	82	294	80	174	26	19	12	8.7	8.4	8.1
20	4.3	10	25	189	74	163	27	21	12	8.9	11	16
21	4.0	10	17	196	70	120	26	22	12	8.7	10	10
22	3.7	10	55	129	65	76	26	22	11	8.7	8.4	10
23	3.7	9.0	21	90	64	60	26	21	9.6	9.8	8.0	12
24	3.5	8.0	14	59	77	54	26	21	9.7	12	8.6	9.9
25	3.5	8.0	11	74	59	53	25	20	10	11	8.8	11
26	3.2	8.0	9.8	53	248	51	25	17	12	9.0	8.3	9.3
27	3.0	9.0	11	44	1,760	49	24	17	12	8.6	8.0	9.2
28	3.0	9.0	11	43	421	46	28	16	11	8.0	8.7	9.7
29	3.2	10	8.9	97	------	46	24	15	9.7	7.4	9.0	9.1
30	3.0	12	8.4	115	------	69	47	14	9.3	7.3	8.4	8.5
31	3.0	------	8.0	63	------	67	------	13	------	8.0	8.2	------
TOTAL	467.1	1,468.7	706.1	9,895.2	7,323	3,496	949	616	334.5	283.0	304.1	267.2
MEAN	15.1	49.0	22.8	319	262	113	31.6	19.9	11.2	9.13	9.81	8.91
MAX	134	350	117	2,130	1,760	349	47	43	13	12	21	16
MIN	3.0	3.0	7.5	7.5	42	46	24	13	9.3	7.3	7.7	7.3
AC-FT	926	2,910	1,400	19,630	14,530	6,930	1,880	1,220	663	561	603	530

CAL YR 1972 TOTAL 5,241.5 MEAN 14.3 MAX 350 MIN 3.0 AC-FT 10,400
WTR YR 1973 TOTAL 26,109.9 MEAN 71.5 MAX 2,130 MIN 3.0 AC-FT 51,790

PEAK DISCHARGE (BASE, 850 CFS)

DATE	TIME	G.H.	DISCHARGE	DATE	TIME	G.H.	DISCHARGE
11-15	unknown	--	1,000	1-18	1130	10.56	5,340
1-9	1100	8.42	3,620	2-6	unknown	--	3,000
1-12	0945	7.21	2,660	2-10	0130	6.63	2,190
1-16	1015	12.98	7,270	2-27	1630	14.0	8,000

11456000 NAPA RIVER NEAR ST. HELENA, CALIF.

LOCATION.--Lat 38°29'52", long 122°25'37", in Carne Humana Grant, Napa County, on right bank 0.2 mile upstream from highway bridge, 1.3 miles northeast of Zinfandel, and 2.5 miles east of St. Helena.

DRAINAGE AREA.--81.4 sq mi.

PERIOD OF RECORD.--October 1929 to September 1932, October 1939 to current year. Monthly discharge only for some periods, published in WSP 1315-B.

GAGE.--Water-stage recorder. Datum of gage is 172.12 ft above mean sea level. Prior to Nov. 22, 1958, at datum 1.00 ft higher.

AVERAGE DISCHARGE.--37 years, 94.4 cfs (68,390 acre-ft per year).

EXTREMES.--Current year: Maximum discharge, 11,300 cfs Jan. 16 (gage height, 15.10 ft, from peak-stage indicator); minimum daily, 0.29 cfs Aug. 25, 26.
Period of record: Maximum discharge, 12,600 cfs Dec. 22, 1955 (gage height, 16.17 ft, present datum); no flow at times.

REMARKS.--Records good except those for period of no gage-height record, which are fair. Some regulation by Bell Canyon Reservoir since 1959 (capacity, 2,530 acre-ft). Small diversions above station for irrigation of about 1,500 acres (revised). Records of water temperatures for the current year are published in Part 2 of this report.

DISCHARGE, IN CUBIC FEET PER SECOND, WATER YEAR OCTOBER 1972 TO SEPTEMBER 1973

DAY	OCT	NOV	DEC	JAN	FEB	MAR	APR	MAY	JUN	JUL	AUG	SEP
1	3.0	2.0	15	50	255	470	79	18	9.8	3.3	1.1	.68
2	2.7	2.0	15	47	218	349	74	18	9.5	2.9	1.3	.73
3	2.3	2.7	16	44	255	457	68	19	7.0	3.0	1.1	.82
4	2.7	11	18	41	470	444	66	18	6.4	3.0	.86	.90
5	3.0	5.3	15	39	390	358	62	18	7.9	2.6	.70	.79
6	1.5	1.5	95	37	571	494	57	17	8.0	3.2	.80	.79
7	1.2	4.8	63	35	915	358	52	17	6.8	3.6	.57	.73
8	1.2	12	43	185	540	317	48	16	5.5	4.3	.60	.77
9	1.5	4.2	33	1,510	495	259	44	16	6.1	3.7	.85	.76
10	4.8	36	30	604	1,040	230	41	16	5.8	3.2	.49	.72
11	12	134	27	2,340	795	207	39	15	5.6	1.8	.53	.77
12	18	21	44	3,100	647	177	38	14	6.8	1.4	.50	.98
13	13	95	27	920	643	151	37	14	6.7	2.6	.98	1.0
14	10	516	24	420	710	133	36	14	6.2	2.7	.82	.85
15	24	274	22	340	540	120	35	13	5.7	2.4	.83	.85
16	24	315	37	3,400	415	108	34	13	6.2	2.3	.83	.85
17	18	118	533	1,020	325	102	33	14	6.8	2.6	.85	.85
18	12	66	328	2,650	267	91	33	13	6.9	2.1	1.6	.95
19	10	51	381	952	228	115	32	12	5.8	2.0	1.4	.93
20	8.5	40	216	526	198	157	30	13	5.3	2.2	1.2	1.1
21	7.4	33	153	300	177	190	27	12	5.0	1.5	1.2	1.2
22	6.4	29	224	270	156	173	27	12	5.0	2.8	.86	1.3
23	6.4	26	169	255	142	139	26	12	4.6	3.8	.37	1.9
24	5.3	23	142	240	409	119	25	12	4.4	1.7	.31	1.8
25	3.7	21	112	236	399	110	23	12	3.9	1.3	.29	2.3
26	3.7	20	94	200	592	102	23	12	3.2	2.1	.29	2.2
27	3.7	19	86	175	746	92	22	11	3.5	1.7	.33	1.8
28	3.7	18	78	156	640	85	22	10	4.8	1.5	.71	1.1
29	3.0	16	68	281	------	80	21	11	4.8	1.5	.78	.94
30	2.3	16	60	516	------	90	20	10	4.4	1.5	.34	.85
31	2.3	------	55	328	------	97	------	9.6	------	1.2	.39	------
TOTAL	221.3	1,932.5	3,223	21,417	13,178	6,374	1,174	431.6	178.4	75.5	23.78	32.21
MEAN	7.14	64.4	104	691	471	206	39.1	13.9	5.95	2.44	.77	1.07
MAX	24	516	533	3,400	1,040	494	79	19	9.8	4.3	1.6	2.3
MIN	1.2	1.5	15	35	142	80	20	9.6	3.2	1.2	.29	.68
AC-FT	439	3,830	6,390	42,480	26,140	12,640	2,330	856	354	150	47	64

CAL YR 1972 TOTAL 12,136.34 MEAN 33.2 MAX 533 MIN .17 AC-FT 24,070
WTR YR 1973 TOTAL 48,261.29 MEAN 132 MAX 3,400 MIN .29 AC-FT 95,730

PEAK DISCHARGE (BASE, 4,200 CFS).--Jan. 12 (0515) 9,990 cfs (14.21 ft); Jan. 16 (time unknown) 11,300 cfs (15.10 ft).

NOTE.--No gage-height record Jan. 12-18.

11456500 CONN CREEK NEAR OAKVILLE, CALIF.

LOCATION.--Lat 38°26'50", long 122°22'47", in Caymus Grant, Napa County, on left bank 20 ft upstream from Oakville Cross Road bridge, and 1.4 miles northeast of Oakville.

DRAINAGE AREA.--55.4 sq mi.

PERIOD OF RECORD.--October 1929 to September 1959 (published as "near St. Helena"), October 1970 to current year. Monthly discharge only for some periods, published in WSP 1315-B.

GAGE.--Water-stage recorder. Datum of gage is 112.18 ft above mean sea level (levels by county of Napa). November 1929, to Aug. 4, 1952, at site 3.3 miles upstream at different datum. Aug. 5, 1952, to Sept. 30, 1959, at site 4.9 miles upstream at different datum.

AVERAGE DISCHARGE (prior to construction of Conn Dam).--16 years (1929-45), 33.9 cfs (24,540 acre-ft per year).

EXTREMES.--Current year: Maximum discharge, 1,900 cfs Jan. 18 (gage height, 8.41 ft); no flow many days. Period of record: Maximum discharge, 7,700 cfs Feb. 27, 1940 (gage height, 11.80 ft, site and datum then in use); no flow many days in each year.

REMARKS.--Records good except those below 5 cfs, which are fair. Flow regulated by Lake Hennessey 6.5 miles upstream beginning in December 1945 (capacity, 31,000 acre-ft). Diversion for irrigation of about 700 acres occurs between dam and gage. Some effluent ground water flows past the station during the summer months at times when the stream is dry a short distance above and below the gage; no flow is computed for these periods.

DISCHARGE, IN CUBIC FEET PER SECOND, WATER YEAR OCTOBER 1972 TO SEPTEMBER 1973

DAY	OCT	NOV	DEC	JAN	FEB	MAR	APR	MAY	JUN	JUL	AUG	SEP
1	.10	.30	.62	1.5	158	327	53	1.6	.92	.25		
2	.12	.30	.62	1.5	135	236	49	1.6	1.4	.25		
3	.15	.34	.62	1.5	132	211	42	1.5	1.2	0		
4	.18	.50	.62	1.4	184	227	38	1.5	1.0	0		
5	.15	.25	.69	1.4	222	182	36	1.3	.76	0		
6	.08	.25	.84	1.4	264	211	34	1.0	.69	0		
7	.04	.34	.69	1.3	512	205	33	1.2	.62	0		
8	.04	.25	.62	2.9	379	176	29	1.0	.50	0		
9	.12	.21	.62	12	296	147	26	.84	.56	0		
10	.25	.62	.56	2.8	448	132	22	.84	1.1	0		
11	.44	.76	.56	35	414	122	21	1.9	1.3	0		
12	.39	.56	.56	111	350	106	18	1.5	1.3	0		
13	.34	1.2	.56	24	353	92	18	1.2	1.4	0		
14	.39	4.9	.56	11	350	87	21	2.0	1.3	0		
15	1.4	3.0	.56	7.4	317	76	20	3.0	.84	0		
16	.92	4.0	.84	152	249	75	19	2.3	1.2	0		
17	1.1	2.8	4.9	230	205	70	19	2.6	1.7	0		
18	.84	2.2	5.6	1,380	172	63	17	2.2	1.0	0		
19	.76	1.7	5.6	907	146	70	16	2.6	.44	0		
20	.76	1.5	4.0	470	126	112	15	2.5	.44	0		
21	.69	1.4	3.5	350	114	107	10	2.0	.44	0		
22	.69	1.4	3.3	249	101	107	7.8	2.3	.44	0		
23	.62	1.2	2.8	188	92	90	9.6	2.5	.56	0		
24	.50	1.1	2.6	149	133	79	10	2.8	.62	0		
25	.39	1.0	2.3	135	205	71	7.0	2.8	.62	0		
26	.39	1.0	2.2	122	231	67	5.3	2.8	.62	0		
27	.44	.92	2.2	103	379	62	4.9	2.2	.56	0		
28	.34	.76	2.0	90	484	57	2.6	2.3	.44	0		
29	.30	.76	1.9	98	------	53	1.7	1.5	.34	0		
30	.25	.76	1.7	231	------	54	2.2	.84	.34	0		
31	.25	------	1.6	201	------	58	------	.84	------	0		------
TOTAL	13.43	36.28	56.34	5,271.1	7,151	3,732	607.1	57.06	24.65	.50	0	0
MEAN	.43	1.21	1.82	170	255	120	20.2	1.84	.82	.016	0	0
MAX	1.4	4.9	5.6	1,380	512	327	53	3.0	1.7	.25	0	0
MIN	.04	.21	.56	1.3	92	53	1.7	.84	.34	0	0	0
AC-FT	27	72	112	10,460	14,180	7,400	1,200	113	49	1.0	0	0

CAL YR 1972 TOTAL 326.67 MEAN .89 MAX 5.6 MIN 0 AC-FT 648
WTR YR 1973 TOTAL 16,949.46 MEAN 46.4 MAX 1,380 MIN 0 AC-FT 33,620

11458000 NAPA RIVER NEAR NAPA, CALIF.

LOCATION.--Lat 38°22'06", long 122°18'08", in Yajome Grant, Napa County, on left bank at downstream side of Oak Knoll Avenue bridge, 0.4 mile downstream from Dry Creek, and 5 miles north of Napa.

DRAINAGE AREA.--218 sq mi.

PERIOD OF RECORD.--October 1929 to September 1932, October 1959 to current year. Monthly discharge only for some periods, published in WSP 1315-B.

GAGE.--Water-stage recorder. Datum of gage is 24.74 ft above mean sea level.

AVERAGE DISCHARGE.--17 years, 181 cfs (131,100 acre-ft per year).

EXTREMES.--Current year: Maximum discharge, 13,900 cfs Jan. 16 (gage height, 21.40 ft); minimum daily, 0.59 cfs July 27.
Period of record: Maximum discharge, 16,900 cfs Jan. 31, 1963 (gage height, 27.59 ft); no flow at times.

REMARKS.--Records good except those below 2 cfs, which are fair. Flow slightly regulated by Bell Canyon Reservoir beginning in 1959 (capacity, 2,530 acre-ft) and Lake Hennessey beginning in December 1945 (capacity, 31,000 acre-ft). Diversions for irrigation of about 10,000 acres above station.

REVISIONS (WATER YEARS).--WSP 1315-B: 1930(M).

DISCHARGE, IN CUBIC FEET PER SECOND, WATER YEAR OCTOBER 1972 TO SEPTEMBER 1973

DAY	OCT	NOV	DEC	JAN	FEB	MAR	APR	MAY	JUN	JUL	AUG	SEP
1	1.7	5.4	14	45	643	1,410	214	58	19	4.5	2.9	1.7
2	1.7	4.6	14	42	553	1,060	194	57	18	3.3	2.2	1.6
3	1.9	4.6	13	40	589	1,090	178	56	19	1.7	1.7	2.0
4	1.9	6.5	15	35	1,000	1,120	162	54	16	2.5	1.1	1.7
5	1.8	8.4	13	32	914	907	153	53	13	3.3	1.6	1.6
6	1.6	7.0	101	30	1,260	1,150	149	51	15	2.9	2.3	1.9
7	1.6	6.5	75	28	2,350	977	140	50	13	2.5	1.6	2.2
8	1.9	7.5	44	198	1,630	868	132	48	11	3.1	1.0	2.2
9	2.5	11	28	2,180	1,430	749	129	46	11	4.3	1.6	1.6
10	3.4	18	24	1,170	2,260	670	123	46	11	3.5	1.6	2.0
11	3.8	263	22	2,650	1,980	622	118	43	11	2.3	.92	2.7
12	11	83	28	8,080	1,640	541	115	43	7.8	1.5	.92	2.5
13	17	305	24	2,330	1,700	484	112	41	8.7	1.3	1.0	2.5
14	9.9	1,200	18	1,210	1,750	439	112	40	12	1.7	1.6	2.7
15	18	490	17	1,010	1,500	398	106	36	11	1.9	1.6	2.9
16	14	700	36	8,450	1,200	370	103	37	8.7	1.6	1.7	3.1
17	45	278	924	2,660	942	353	99	38	11	2.3	1.6	2.9
18	15	133	631	7,310	774	320	95	36	12	2.0	1.6	2.7
19	7.5	91	658	2,870	661	353	91	35	9.8	1.5	1.6	2.9
20	6.0	63	400	1,610	574	499	90	34	6.9	2.0	1.5	3.3
21	5.4	47	275	1,370	513	490	85	33	6.3	2.2	1.6	3.1
22	5.6	38	333	992	452	466	79	31	2.5	2.3	1.6	3.1
23	4.8	31	270	833	412	385	79	31	3.8	2.2	1.6	3.3
24	5.2	26	200	658	1,190	343	78	30	4.8	2.0	1.0	3.3
25	4.8	23	153	631	1,160	315	79	31	5.3	1.6	1.7	3.5
26	4.8	21	119	544	1,720	295	76	30	3.8	.85	1.7	3.3
27	4.6	20	105	466	2,200	270	70	28	3.3	.59	1.5	3.3
28	4.6	18	94	415	1,910	248	67	27	3.5	.71	1.5	3.3
29	3.9	16	73	565	------	228	65	25	3.8	1.5	1.7	3.1
30	4.4	15	62	1,160	------	234	63	24	4.8	2.2	1.7	2.9
31	4.8	------	54	805	------	254	------	24	------	2.9	1.6	------
TOTAL	220.1	3,940.5	4,837	50,419	34,907	17,908	3,356	1,216	286.8	68.75	48.84	78.9
MEAN	7.10	131	156	1,626	1,247	578	112	39.2	9.56	2.22	1.58	2.63
MAX	45	1,200	924	8,450	2,350	1,410	214	58	19	4.5	2.9	3.5
MIN	1.6	4.6	13	28	412	228	63	24	2.5	.59	.92	1.6
AC-FT	437	7,820	9,590	100,000	69,240	35,520	6,660	2,410	569	136	97	156

CAL YR 1972 TOTAL 19,350.93 MEAN 52.9 MAX 1,200 MIN 0 AC-FT 38,380
WTR YR 1973 TOTAL 117,286.89 MEAN 321 MAX 8,450 MIN .59 AC-FT 232,600

PEAK DISCHARGE (BASE, 5,000 CFS)

DATE	TIME	G.H.	DISCHARGE	DATE	TIME	G.H.	DISCHARGE
1-12	0915	19.50	11,400	1-18	1200	19.70	11,600
1-16	1045	21.40	13,900				

11458100 MILLIKEN CREEK NEAR NAPA, CALIF.

LOCATION.--Lat 38°20'19", long 122°16'06", in Yajome Grant, Napa County, on right bank at upstream side of Hedgeside Road bridge, 3.0 miles northwest of town of Napa.

DRAINAGE AREA.--17.3 sq mi.

PERIOD OF RECORD.--October 1970 to current year.

GAGE.--Water-stage recorder. Datum of gage is 37.68 ft above mean sea level (levels by county of Napa).

EXTREMES.--Current year: Maximum discharge, 1,500 cfs Jan. 16 (gage height, 8.38 ft, backwater from debris); no flow Sept. 17, 18.
Period of record: Maximum discharge, 3,580 cfs Dec. 3, 1970 (gage height, 5.68 ft), from rating curve extended above 1,100 cfs; maximum gage height, 8.38 ft Jan. 16, 1973 (backwater from debris); no flow Aug. 12, 1972, Sept. 17, 18, 1973.

REMARKS.--Records good except those for period of backwater from debris, which are poor. Flow regulated by Milliken Reservoir (capacity, 2,000 acre-ft) and by several small lakes and diversion dams on the Silverado Golf Course; diversions above station for irrigation of about 500 acres and for municipal supply of city of Napa.

DISCHARGE, IN CUBIC FEET PER SECOND, WATER YEAR OCTOBER 1972 TO SEPTEMBER 1973

DAY	OCT	NOV	DEC	JAN	FEB	MAR	APR	MAY	JUN	JUL	AUG	SEP
1	.38	4.8	4.4	11	71	71	14	1.9	.42	.76	.60	.34
2	.47	4.8	4.4	5.7	59	56	7.5	2.0	.31	.70	.55	.68
3	.68	7.4	4.8	6.2	59	70	4.4	1.9	.42	.66	.52	1.0
4	.31	12	8.0	9.4	59	60	2.9	1.6	.80	1.1	.49	1.1
5	.12	7.4	6.2	5.7	48	45	2.2	1.8	.42	1.5	.47	2.9
6	.80	4.8	21	6.2	144	90	2.4	1.5	.74	.94	.44	2.0
7	1.8	4.8	14	6.2	345	70	1.4	1.2	.80	.80	.42	1.9
8	1.4	5.2	11	81	129	55	.87	1.2	.68	1.0	.41	1.9
9	.94	5.7	8.7	523	124	45	1.6	.87	.80	.74	.39	1.3
10	.31	20	7.4	158	444	40	2.6	.68	1.2	1.1	.38	1.0
11	.68	21	6.8	400	234	35	1.4	.74	1.2	.74	.37	1.0
12	1.0	6.2	6.2	750	170	30	1.5	.80	1.4	.87	.35	1.0
13	1.0	119	6.2	250	154	26	2.2	.87	1.8	1.5	.34	1.1
14	1.9	260	6.2	132	162	24	2.4	1.5	1.1	1.3	.34	.52
15	3.4	86	6.2	132	115	22	2.2	1.3	1.5	.94	.33	.06
16	2.0	53	11	600	71	20	2.0	.94	1.8	.94	.32	.02
17	12	20	141	250	68	18	2.6	1.0	1.8	.87	.32	0
18	4.8	11	123	500	38	17	1.9	.80	1.9	.94	.32	0
19	3.2	9.4	132	262	25	20	1.8	1.1	.94	1.3	.31	.42
20	2.0	7.4	71	150	21	30	1.8	.94	1.5	1.2	.31	1.1
21	1.5	6.2	53	181	21	35	1.6	.57	1.3	1.3	.31	.94
22	1.3	5.7	62	108	18	30	1.4	1.5	1.2	1.0	.31	.52
23	1.3	5.2	45	68	18	22	1.6	2.0	1.0	.57	.38	.17
24	.94	5.2	38	53	21	20	1.4	1.4	.90	.94	.50	.19
25	.94	5.7	25	56	17	17	1.6	1.5	.82	1.1	.60	.23
26	1.1	5.2	20	48	35	15	1.8	1.0	.95	1.0	.70	.07
27	.94	5.2	20	40	126	14	1.9	1.2	1.1	.90	1.0	.25
28	.80	5.7	18	28	115	13	1.8	1.3	1.0	.80	.80	.21
29	1.2	4.8	16	65	------	13	2.4	.62	.90	.75	.87	.28
30	4.8	4.8	9.4	182	------	25	1.8	.42	.82	.68	.23	.57
31	6.2	------	14	98	------	20	------	.52	------	.64	.31	------
TOTAL	60.21	723.6	919.9	5,165.4	2,911	1,068	76.97	36.67	31.52	29.58	13.99	22.77
MEAN	1.94	24.1	29.7	167	104	34.5	2.57	1.18	1.05	.95	.45	.76
MAX	12	260	141	750	444	90	14	2.0	1.9	1.5	1.0	2.9
MIN	.12	4.8	4.4	5.7	17	13	.87	.42	.31	.57	.23	0
AC-FT	119	1,440	1,820	10,250	5,770	2,120	153	73	63	59	28	45

CAL YR 1972 TOTAL 2,303.09 MEAN 6.29 MAX 260 MIN 0 AC-FT 4,570
WTR YR 1973 TOTAL 11,059.61 MEAN 30.3 MAX 750 MIN 0 AC-FT 21,940

PEAK DISCHARGE (BASE, 600 CFS)

DATE	TIME	G.H.	DISCHARGE	DATE	TIME	G.H.	DISCHARGE
11-14	0200	4.16	1,420	1-16	0900	8.38	1,500
1-9	1030	4.00	1,250	2-7	0430	3.45	750
1-12	1200	6.23	1,400	2-10	1500	3.50	790

NOTE.--Backwater from debris Jan. 16-18.

11458200 REDWOOD CREEK NEAR NAPA, CALIF.

LOCATION.--Lat 38°19'04", long 122°20'35", in Napa Grant, Napa County, on right bank 2.9 miles upstream from confluence with Browns Valley Creek, and 3.4 miles northwest of Napa.

DRAINAGE AREA.--9.79 sq mi.

PERIOD OF RECORD.--July 1958 to September 1973 (discontinued).

GAGE.--Water-stage recorder. Datum of gage is 166.16 ft above mean sea level.

AVERAGE DISCHARGE.--15 years, 10.8 cfs (7,820 acre-ft per year).

EXTREMES.--Current year: Maximum discharge, 1,260 cfs Jan. 16 (gage height, 8.18 ft); no flow many days. Period of record: Maximum discharge, 1,460 cfs Nov. 27, 1970 (gage height, 8.52 ft); maximum gage height, 10.44 ft Jan. 5, 1965; no flow many days in each year.

REMARKS.--Records good. Small storage and release affects summer flow.

DISCHARGE, IN CUBIC FEET PER SECOND, WATER YEAR OCTOBER 1972 TO SEPTEMBER 1973

DAY	OCT	NOV	DEC	JAN	FEB	MAR	APR	MAY	JUN	JUL	AUG	SEP
1	0	.17	2.3	4.0	7.0	62	16	1.9	.31	.10		
2	0	.16	2.1	3.8	5.8	51	14	1.9	.27	.09		
3	0	.18	2.5	3.4	6.8	61	13	1.8	.86	.09		
4	0	6.4	3.6	3.2	25	54	12	1.6	.24	.08		
5	0	2.6	2.7	2.9	13	45	11	1.6	.24	.08		
6	0	1.3	12	2.7	78	55	10	1.6	.21	.06		
7	0	1.2	7.5	2.6	129	44	9.6	1.5	.20	.05		
8	0	1.2	6.1	9.3	79	43	8.7	1.3	.19	.04		
9	0	1.1	4.8	158	98	37	8.7	1.2	.19	.03		
10	0	7.0	4.3	49	118	35	8.2	1.2	.18	.02		
11	0	20	3.9	306	91	33	7.8	.86	.17	.01		
12	0	4.6	3.7	521	83	28	6.9	.57	.16	.01		
13	0	68	3.5	102	77	25	6.9	.31	.16	0		
14	0	100	3.3	54	109	22	7.8	.27	.15	0		
15	3.6	35	3.2	55	76	20	6.4	.27	.15	0		
16	2.5	29	6.3	494	66	18	6.0	.27	.14	0		
17	6.3	14	67	125	55	17	5.6	.24	.14	0		
18	2.4	10	39	371	47	16	4.8	2.2	.13	0		
19	1.1	8.5	40	74	42	28	4.5	.31	.13	0		
20	.73	6.8	21	31	38	31	4.5	.62	.13	0		
21	.48	5.7	16	24	33	39	3.8	.62	.12	0		
22	.32	4.9	19	22	29	30	3.5	.62	.12	0		
23	.27	4.3	14	21	26	23	3.2	.57	.12	0		
24	.23	3.9	11	20	64	21	3.0	.57	.11	0		
25	.22	3.5	9.5	19	51	19	3.0	.68	.11	0		
26	.22	3.2	7.9	18	73	18	2.6	.52	.11	0		
27	.21	2.9	7.3	17	110	17	2.4	.43	.11	0		
28	.20	2.8	6.8	16	80	16	2.2	.35	.10	0		
29	.20	2.6	5.8	19	------	14	2.6	1.2	.10	0		
30	.20	2.4	5.0	25	------	23	2.2	.31	.10	0		
31	.19	------	4.4	11	------	22	------	.31	------	0		------
TOTAL	19.37	353.41	345.5	2,583.9	1,709.6	967	200.9	27.70	5.45	.66	0	0
MEAN	.62	11.8	11.1	83.4	61.1	31.2	6.70	.89	.18	.021	0	0
MAX	6.3	100	67	521	129	62	16	2.2	.86	.10	0	0
MIN	0	.16	2.1	2.6	5.8	14	2.2	.24	.10	0	0	0
AC-FT	38	701	685	5,130	3,390	1,920	398	55	11	1.3	0	0

CAL YR 1972 TOTAL 1,201.37 MEAN 3.28 MAX 100 MIN 0 AC-FT 2,380
WTR YR 1973 TOTAL 6,213.49 MEAN 17.0 MAX 521 MIN 0 AC-FT 12,320

PEAK DISCHARGE (BASE, 400 CFS)

DATE	TIME	G.H.	DISCHARGE	DATE	TIME	G.H.	DISCHARGE
1-9	0915	6.18	614	1-16	0730	8.18	1,260
1-12	1115	6.84	812				

11458300 NAPA CREEK AT NAPA, CALIF.

LOCATION.--Lat 38°18'07", long 122°18'10", in Napa Grant, Napa County, on left bank 150 ft upstream from bridge on State Highway 29 in town of Napa, 0.6 mile downstream from confluence of Redwood and Browns Creeks.

DRAINAGE AREA.--14.9 sq mi.

PERIOD OF RECORD.--October 1970 to current year.

GAGE.--Water-stage recorder. Datum of gage is 32.60 ft above mean sea level (levels by county of Napa).

EXTREMES.--Current year: Maximum discharge, 2,470 cfs Jan. 18 (gage height, 10.68 ft), from rating curve extended above 1,100 cfs; no flow many days.
Period of record: Maximum discharge, 2,470 cfs Jan. 18, 1973 (gage height, 10.68 ft), from rating curve extended above 1,100 cfs; no flow many days in each year.

REMARKS.--Records good except those for period of no gage-height record, which are poor. No regulation; small diversion above station for domestic use.

DISCHARGE, IN CUBIC FEET PER SECOND, WATER YEAR OCTOBER 1972 TO SEPTEMBER 1973

DAY	OCT	NOV	DEC	JAN	FEB	MAR	APR	MAY	JUN	JUL	AUG	SEP
1	0	.04	2.3	6.6	50	71	15	2.0	.35	.10	.02	0
2	0	.06	2.2	5.8	44	59	15	2.0	.35	.10	.01	0
3	0	3.0	3.1	5.8	51	84	13	1.8	.35	.10	.01	0
4	0	4.3	4.4	5.8	89	66	12	1.7	.35	.10	.01	0
5	0	1.3	2.7	5.1	67	52	13	1.7	.35	.08	.01	0
6	0	.84	28	4.6	185	79	11	1.7	.35	.08	.01	0
7	0	.52	12	4.1	208	54	10	1.6	.35	.10	.01	0
8	0	.24	8.4	24	102	53	9.1	1.7	.30	.08	.01	0
9	.48	.32	5.8	234	130	43	8.8	1.6	.30	.08	.01	0
10	.21	18	5.1	50	231	41	8.4	1.6	.30	.08	.01	0
11	.52	23	4.6	455	128	39	7.8	1.5	.30	.08	.01	0
12	.24	.52	3.9	676	118	34	7.8	.90	.30	.08	.01	0
13	2.1	195	3.7	146	98	31	7.8	.85	.30	.08	.01	0
14	.77	254	3.3	74	165	28	8.1	.80	.30	.10	.01	0
15	5.1	81	3.1	74	106	25	7.2	.75	.30	.10	.01	0
16	7.4	54	19	771	87	23	6.6	.70	.30	.08	.01	0
17	14	25	136	198	72	22	6.6	.65	.30	.10	.01	0
18	2.2	17	71	648	62	20	6.1	.60	.25	.12	.01	0
19	.70	14	69	155	52	41	5.1	.55	.25	.12	.01	.01
20	.28	11	35	101	46	42	4.4	.50	.25	.12	.01	.05
21	.15	8.1	28	101	38	57	4.1	.50	.25	.10	.01	.10
22	.12	6.4	31	61	33	37	3.7	.50	.25	.08	.01	.15
23	.10	5.1	23	45	29	28	3.7	.45	.20	.10	.01	.20
24	.12	4.4	19	37	74	26	3.5	.45	.20	.08	.01	.22
25	.10	3.9	16	31	61	25	3.1	.45	.20	.15	.01	.24
26	.08	3.7	13	27	109	23	2.7	.40	.15	.10	.01	.20
27	.08	3.1	12	24	157	21	2.3	.40	.15	.06	.01	.15
28	.08	2.7	11	21	104	18	2.3	.40	.15	.06	0	.10
29	.06	2.5	8.8	64	------	17	2.3	.40	.15	.06	0	.05
30	.04	2.5	8.4	120	------	28	2.2	.40	.10	.04	0	.04
31	.04	------	7.2	60	------	24	------	.35	------	.04	0	------
TOTAL	34.97	745.54	600.0	4,234.8	2,696	1,211	212.7	29.90	8.00	2.75	.28	1.51
MEAN	1.13	24.9	19.4	137	96.3	39.1	7.09	.96	.27	.089	.009	.050
MAX	14	254	136	771	231	84	15	2.0	.35	.15	.02	.24
MIN	0	.04	2.2	4.1	29	17	2.2	.35	.10	.04	0	0
AC-FT	69	1,480	1,190	8,400	5,350	2,400	422	59	16	5.5	.6	3.0

CAL YR 1972 TOTAL 2,078.41 MEAN 5.68 MAX 254 MIN 0 AC-FT 4,120
WTR YR 1973 TOTAL 9,777.45 MEAN 26.8 MAX 771 MIN 0 AC-FT 19,390

PEAK DISCHARGE (BASE, 600 CFS)

DATE	TIME	G.H.	DISCHARGE	DATE	TIME	G.H.	DISCHARGE
11-14	0100	8.03	1,480	1-16	0730	10.00	2,200
1-9	1000	5.48	733	1-18	0700	10.68	2,470
1-11	1630	7.00	1,150				

NOTE.--No gage-height record May 8 to July 5.

11458350 TULUCAY CREEK AT NAPA, CALIF.

LOCATION.--Lat 38°17'09", long 122°16'29", in Tulucay Grant, Napa County, on left bank 150 ft downstream from bridge on State Highways 12 and 29 in Napa.

DRAINAGE AREA.--12.6 sq mi.

PERIOD OF RECORD.--October 1971 to current year.

GAGE.--Water-stage recorder. Datum of gage is 3.65 ft above mean sea level (levels by county of Napa).

EXTREMES.--Current year: Maximum discharge, 1,050 cfs Jan. 16 (gage height, 5.55 ft); minimum daily, 0.06 cfs Oct. 7, 8.

REMARKS.--Records good except those for periods of tide effect, which are fair. No regulation; some small diversions above station for irrigation of about 30 acres.

DISCHARGE, IN CUBIC FEET PER SECOND, WATER YEAR OCTOBER 1972 TO SEPTEMBER 1973

DAY	OCT	NOV	DEC	JAN	FEB	MAR	APR	MAY	JUN	JUL	AUG	SEP
1	.10	.31	2.4	4.5	41	40	7.2	.74	.28	.28	.37	.20
2	.10	.34	2.2	4.5	31	29	5.5	.68	.28	.30	.34	.20
3	.10	2.2	2.2	4.1	34	49	4.5	.58	.26	.34	.34	.20
4	.10	5.9	2.6	3.7	33	44	4.1	.68	.26	.40	.34	.22
5	.08	1.8	2.2	3.3	29	33	4.1	.63	.26	.48	.34	.22
6	.08	1.3	13	3.3	106	56	3.7	.58	.26	.48	.32	.22
7	.06	1.2	7.7	2.9	138	36	3.3	.53	.26	.58	.30	.22
8	.06	.87	6.0	31	70	31	2.9	.53	.24	.63	.28	.20
9	.64	1.0	5.0	174	86	23	2.6	.48	.24	.63	.28	.20
10	.27	7.2	4.5	80	172	20	2.4	.44	.24	.68	.26	.22
11	.39	10	4.1	299	130	18	2.2	.40	.26	.74	.24	.20
12	.18	4.1	3.3	541	106	14	2.1	.40	.26	.74	.24	.22
13	.23	72	3.3	139	80	12	2.1	.40	.24	.74	.22	.22
14	.35	202	2.9	70	103	9.9	2.1	.40	.24	.74	.20	.22
15	2.8	84	2.9	58	74	8.2	1.8	.40	.22	.80	.22	.22
16	2.6	62	24	422	50	7.7	1.8	.40	.22	.80	.20	.22
17	3.6	30	99	152	38	7.2	1.7	.37	.22	.87	.22	.22
18	1.5	21	60	355	30	6.0	1.6	.34	.22	.87	.22	.22
19	1.0	16	54	118	23	10	1.5	.37	.20	.87	.20	.22
20	.80	11	34	66	19	17	1.4	.40	.18	.80	.18	.24
21	.63	8.8	26	66	17	18	1.4	.40	.16	.87	.18	.22
22	.58	7.7	22	44	14	16	1.3	.40	.18	.80	.20	.26
23	.58	6.0	18	33	13	12	1.3	.40	.20	.74	.18	.24
24	.53	5.0	16	28	13	9.9	1.2	.40	.20	.87	.20	.24
25	.44	4.5	13	28	11	8.8	1.0	.40	.20	.80	.20	.22
26	.40	4.1	9.9	22	24	8.2	.94	.37	.22	.74	.20	.22
27	.40	3.3	9.4	18	82	7.2	.94	.34	.22	.68	.18	.24
28	.40	3.3	8.8	16	64	6.0	.94	.31	.24	.68	.20	.22
29	.37	2.6	7.7	49	------	5.0	.94	.28	.24	.63	.20	.24
30	.34	2.4	6.0	127	------	8.8	.80	.28	.26	.40	.20	.22
31	.31	------	5.5	57	------	8.8	------	.28	------	.40	.20	------
TOTAL	20.02	581.92	477.6	3,019.3	1,631	579.7	69.36	13.71	6.96	20.38	7.45	6.62
MEAN	.65	19.4	15.4	97.4	58.3	18.7	2.31	.44	.23	.66	.24	.22
MAX	3.6	202	99	541	172	56	7.2	.74	.28	.87	.37	.26
MIN	.06	.31	2.2	2.9	11	5.0	.80	.28	.16	.28	.18	.20
AC-FT	40	1,150	947	5,990	3,240	1,150	138	27	14	40	15	13

CAL YR 1972 TOTAL 1,486.38 MEAN 4.06 MAX 202 MIN .02 AC-FT 2,950
WTR YR 1973 TOTAL 6,434.02 MEAN 17.6 MAX 541 MIN .06 AC-FT 12,760

PEAK DISCHARGE (BASE, 400 CFS)

DATE	TIME	G.H.	DISCHARGE	DATE	TIME	G.H.	DISCHARGE
11-14	0200	3.97	686	1-16	1030	5.55	1,050
1-12	1200	4.30	1,000	1-18	1300	5.08	1,030

NOTE.--Stage-discharge relation effected by high tide Jan. 16, 18.

11458500 SONOMA CREEK AT AGUA CALIENTE, CALIF.

LOCATION.--Lat 38°19'24", long 122°29'36", in Agua Caliente Grant, Sonoma County, on left bank 20 ft upstream from bridge, and 0.4 mile west of Agua Caliente.

DRAINAGE AREA.--58.4 sq mi.

PERIOD OF RECORD.--February 1955 to current year. Prior to October 1966, published as "at Boyes Hot Springs."

GAGE.--Water-stage recorder. Altitude of gage is 120 ft (from topographic map). Prior to July 24, 1967, at site 0.8 mile downstream at different datum. July 24, 1967, to Oct. 9, 1968, at site 130 ft upstream at different datum.

AVERAGE DISCHARGE.--18 years, 73.8 cfs (53,470 acre-ft per year).

EXTREMES.--Current year: Maximum discharge, 8,830 cfs Jan. 16 (gage height, 15.30 ft), from rating curve extended above 3,800 cfs; minimum daily, 0.22 cfs Sept. 29.
Period of record: Maximum discharge, 8,880 cfs Dec. 22, 1955 (gage height, 17.10 ft, site and datum then in use), from rating curve extended above 4,100 cfs on basis of slope-area measurement of maximum flow; no flow at times.

REMARKS.--Records good. No regulation; some diversion above station for irrigation of about 2,000 acres.

DISCHARGE, IN CUBIC FEET PER SECOND, WATER YEAR OCTOBER 1972 TO SEPTEMBER 1973

DAY	OCT	NOV	DEC	JAN	FEB	MAR	APR	MAY	JUN	JUL	AUG	SEP
1	.41	2.3	65	28	167	318	56	15	3.6	1.5	1.5	.66
2	.70	2.5	13	26	146	224	49	15	3.4	1.7	1.4	.61
3	.82	6.1	16	25	258	386	45	15	3.6	1.9	1.4	.55
4	.75	28	19	23	627	289	42	13	3.6	1.9	1.4	.56
5	.90	11	12	22	314	203	39	12	2.8	2.1	1.2	.63
6	.77	6.0	65	21	743	407	38	12	3.2	2.6	1.2	.78
7	.55	8.5	30	19	705	229	36	12	3.0	2.5	1.3	.72
8	.42	8.8	22	142	361	222	33	12	2.7	2.4	1.2	.55
9	2.8	6.9	16	971	540	165	32	12	2.5	2.1	1.2	.51
10	3.6	32	14	314	851	155	30	11	2.5	2.2	1.2	.53
11	13	72	12	2,130	579	142	29	9.1	2.7	2.1	1.2	.49
12	9.0	24	11	3,450	532	115	27	8.7	2.8	2.1	1.0	.57
13	4.7	353	11	895	441	101	35	8.7	2.8	2.2	1.0	.60
14	5.7	489	9.9	402	758	89	34	9.5	2.7	2.2	.94	.48
15	18	328	9.3	469	437	81	28	8.7	2.7	2.2	.94	.39
16	8.7	178	56	3,770	291	74	27	8.7	2.7	2.2	.94	.59
17	16	84	443	1,120	215	68	27	8.7	2.7	2.5	.88	.70
18	7.1	59	241	3,040	169	63	24	7.5	2.7	2.5	.85	.73
19	4.4	52	209	877	139	203	24	6.6	2.7	2.4	.78	.67
20	3.6	40	142	466	120	159	23	7.5	2.5	2.4	.76	.65
21	2.7	32	112	451	104	198	23	6.6	2.2	2.4	.67	.52
22	2.7	28	139	260	91	121	22	6.0	2.1	2.3	.70	.40
23	2.7	25	104	198	82	94	21	6.6	2.1	1.8	.70	1.2
24	2.5	22	86	169	471	83	21	6.0	2.4	1.8	.70	1.3
25	2.0	20	67	176	335	77	19	6.6	1.8	1.7	.65	1.2
26	2.0	19	55	139	571	71	17	6.6	1.8	1.6	.65	.63
27	2.2	17	49	116	819	65	17	6.3	1.8	1.4	.73	.38
28	2.3	16	44	106	548	59	17	5.2	1.8	1.5	.82	.29
29	2.2	15	38	263	------	55	16	4.7	1.5	1.5	.78	.22
30	2.1	14	33	396	------	74	16	3.8	1.5	1.6	.68	.31
31	2.1	------	30	210	------	74	------	3.4	------	1.7	.62	------
TOTAL	127.42	1,999.1	2,173.2	20,694	11,414	4,664	867	274.5	76.9	63.0	29.99	18.42
MEAN	4.11	66.6	70.1	668	408	150	28.9	8.85	2.56	2.03	.97	.61
MAX	18	489	443	3,770	851	407	56	15	3.6	2.6	1.5	1.3
MIN	.41	2.3	9.3	19	82	55	16	3.4	1.5	1.4	.62	.22
AC-FT	253	3,970	4,310	41,050	22,640	9,250	1,720	544	153	125	59	37

CAL YR 1972 TOTAL 8,358.01 MEAN 22.8 MAX 489 MIN .05 AC-FT 16,580
WTR YR 1973 TOTAL 42,401.53 MEAN 116 MAX 3,770 MIN .22 AC-FT 84,100

PEAK DISCHARGE (BASE, 2,300 CFS)

DATE	TIME	G.H.	DISCHARGE	DATE	TIME	G.H.	DISCHARGE
1-9	0900	9.02	2,690	1-16	0645	15.30	8,830
1-11	1700	11.24	4,920	1-18	0715	13.99	7,490

11459500 NOVATO CREEK AT NOVATO, CALIF.

LOCATION.--Lat 38°06'28", long 122°34'44", in Novato Grant, Marin County, on left bank in Novato, 100 ft upstream from 7th Street Bridge.

DRAINAGE AREA.--17.6 sq mi.

PERIOD OF RECORD.--October 1946 to current year. Records of diversions for water years 1952-53, estimated. Prior to October 1966 published as "near Novato."

GAGE.--Water-stage recorder. Altitude of gage is 30 ft (from topographic map). Prior to Aug. 23, 1967, at site 0.6 mile upstream at different datum.

AVERAGE DISCHARGE (adjusted for diversion).--27 years, 12.9 cfs (9,350 acre-ft per year).

EXTREMES.--Current year: Maximum discharge, 1,970 cfs Jan. 16 (gage height, 10.90 ft); no flow for several days. Period of record: Maximum discharge, 2,000 cfs Jan. 14, 1970 (gage height, 11.01 ft); no flow many days in most years.

REMARKS.--Records good except those for periods of no gage-height record or indefinite stage-discharge relation, which are poor. Flow regulated by Stafford Lake beginning Dec. 1, 1951 (capacity, 4,500 acre-ft since Oct. 18, 1954); contents, 1,490 acre-ft Sept. 30, 1972, and 2,490 acre-ft Sept. 30, 1973. Diversion from Stafford Lake for municipal water supply began Apr. 25, 1952, and amounted to 2,120 acre-ft for the current year.

COOPERATION.--Record of diversions furnished by North Marin County Water District.

DISCHARGE, IN CUBIC FEET PER SECOND, WATER YEAR OCTOBER 1972 TO SEPTEMBER 1973

DAY	OCT	NOV	DEC	JAN	FEB	MAR	APR	MAY	JUN	JUL	AUG	SEP
1	.08	3.0	1.9	2.8	63	137	8.0	1.6	1.0	.25	.40	.10
2	.39	3.4	2.2	2.5	58	97	6.5	1.6	1.0	.25	.40	.10
3	0	11	2.7	1.9	102	117	6.0	1.7	1.0	.25	.40	.10
4	0	9.7	3.0	1.8	140	101	5.5	1.7	1.0	.25	.40	.10
5	0	2.8	2.5	1.6	95	81	5.0	1.8	1.0	.25	.40	.10
6	0	2.2	12	1.5	573	96	4.5	1.7	1.0	.25	.30	.10
7	0	7.2	5.1	1.5	420	81	4.0	1.7	1.0	.30	.30	.10
8	0	2.5	3.0	21	198	86	3.6	1.7	1.0	.30	.30	.10
9	5.8	3.0	2.5	143	223	68	3.4	1.7	1.0	.40	.30	.10
10	1.3	25	2.2	43	253	62	3.2	1.7	1.0	.40	.20	.10
11	7.7	13	2.1	207	196	58	3.0	1.7	.50	.40	.20	.10
12	13	5.1	2.1	605	198	51	2.8	1.7	.50	.40	.20	.10
13	4.7	101	1.9	274	186	44	4.0	1.6	.50	.40	.20	.10
14	29	88	1.9	126	275	37	3.4	1.6	.50	.40	.20	.10
15	15	63	1.8	109	180	35	3.0	1.6	.50	.40	.20	.10
16	9.7	27	6.4	946	128	32	2.8	1.6	.50	.50	.10	.10
17	6.7	15	93	341	96	28	2.4	1.6	.50	.50	.10	.10
18	3.8	11	61	931	76	26	2.2	1.7	.50	.50	.10	.10
19	2.7	13	35	309	62	70	2.1	1.6	.50	.54	.10	.10
20	2.5	7.2	16	159	54	55	2.0	1.8	.50	.55	.10	.10
21	2.5	5.8	11	137	47	70	2.0	1.6	.25	.50	.10	.10
22	2.4	5.1	12	93	42	60	2.0	1.6	.25	.50	.06	.10
23	2.2	4.5	8.3	72	39	40	2.0	1.6	.25	.50	.06	.10
24	2.1	3.8	6.9	66	86	30	2.0	1.5	.25	.50	.06	.10
25	1.9	3.4	5.3	63	66	25	2.1	1.5	.25	.50	.06	.10
26	1.9	3.2	4.5	53	131	20	1.8	1.5	.25	.40	.06	.10
27	1.9	3.0	4.0	46	235	15	1.6	1.5	.25	.40	.06	.10
28	1.8	2.8	4.0	43	223	12	1.6	1.5	.25	.40	.06	.10
29	1.8	2.5	3.6	109	------	10	1.6	1.5	.25	.40	.06	.10
30	1.7	2.4	3.2	121	------	8.0	1.6	1.5	.25	.40	.06	.10
31	1.7	------	2.9	79	------	12	------	1.5	------	.40	.06	------
TOTAL	124.27	449.6	324.0	5,109.6	4,445	1,664.0	95.7	50.2	17.50	12.39	5.60	3.00
MEAN	4.01	15.0	10.5	165	159	53.7	3.19	1.62	.58	.40	.18	.10
MAX	29	101	93	946	573	137	8.0	1.8	1.0	.55	.40	.10
MIN	0	2.2	1.8	1.5	39	8.0	1.6	1.5	.25	.25	.06	.10
AC-FT	246	892	643	10,130	8,820	3,300	190	100	35	25	11	6.0

CAL YR 1972 TOTAL 1,298.75 MEAN 3.55 MAX 102 MIN 0 AC-FT 2,580
WTR YR 1973 TOTAL 12,300.86 MEAN 33.7 MAX 946 MIN 0 AC-FT 24,400

NOTE.--No gage-height record Mar. 15 to Apr. 24. Stage-discharge relation indefinite May 21 to Sept. 30.

11459800 SAN RAFAEL CREEK AT SAN RAFAEL, CALIF.

LOCATION.--Lat 37°58'22", long 122°32'07", in San Pedro Santa Margarita Las Gallinas Grant, Marin County, on left bank 22 ft upstream from culvert at intersection of Second and Third Streets in town of San Rafael.

DRAINAGE AREA.--1.24 sq mi.

PERIOD OF RECORD.--November 1971 to current year (seasonal records only).

GAGE.--Water-stage recorder. Datum of gage is 15.56 ft above mean sea level. Recording rain gage at City Hall 0.3 mile northeast of gage.

EXTREMES.--Current year: Maximum discharge, 400 cfs Jan. 18 (gage height, 5.32 ft).
Period of record: Maximum discharge, 400 cfs Jan. 18, 1973 (gage height, 5.32 ft).

REMARKS.--Records good. Low flow affected by return flow from urban irrigation. Records of suspended-sediment discharge for the current year are published in Part 2 of this report.

DISCHARGE, IN CUBIC FEET PER SECOND, OCTOBER 1972 TO MARCH 1973

DAY	OCT	NOV	DEC	JAN	FEB	MAR	APR	MAY	JUN	JUL	AUG	SEP
1	.17	.26		.46		2.9						
2	.25	.27		.46		2.4						
3	.20	3.5		.46		4.4						
4	.17	1.3		.46		2.8						
5	.18	.52		.46		1.9						
6	.16	.42		.48		6.3						
7	.16	1.2		.40		2.5						
8	.17	.42		18		2.1						
9	3.8	1.0		35		1.9						
10	.38	8.7		4.8		1.6						
11	4.4	3.5		34		1.4						
12	5.3	1.4		29		1.1						
13	.74	57		5.1		.85						
14	10	20		2.9		.77						
15	4.2	16		5.7		.72						
16	20	13		63		.69						
17	4.3	5.5		23		.80						
18	1.5	3.2		45		.85						
19	.87	2.7		5.7		10						
20	.64	1.8		3.2		2.9						
21	.52	1.5		3.1		4.1						
22	.46	1.2		1.9		1.8						
23	.39	1.1		1.5		1.4						
24	.36	.94		1.5		1.1						
25	.36	.82		1.3		1.2						
26	.35	.80		1.0		1.0						
27	.30	.74		--		.84						
28	.30	.70		--		.70						
29	.30	.63		--	------	.65						
30	.26	.61		--	------	.90						
31	.26	------			------	.63	------		------			------
TOTAL	61.45	150.73	--	--	--	63.20	--	--	--	--	--	--
MEAN	1.98	5.02	--	--	--	2.04	--	--	--	--	--	--
MAX	20	57	--	--	--	10	--	--	--	--	--	--
MIN	.16	.26	--	--	--	.63	--	--	--	--	--	--
AC-FT	122	299	--	--	--	125	--	--	--	--	--	--
(a)	7.08	9.39	3.80	23.61	9.82	4.27	.11	0	0	0	0	.10

a Precipitation, in inches.

11459830 IRWIN CREEK AT SAN RAFAEL, CALIF.

LOCATION.--Lat 37°58'56", long 122°30'50", in San Pedro Santa Margarita Las Gallinas Grant, Marin County, on right bank at end of Linden Lane in San Rafael.

DRAINAGE AREA.--0.69 sq mi.

PERIOD OF RECORD.--November 1971 to current year (seasonal records only).

GAGE.--Water-stage recorder. Altitude of gage is 75 ft (from topographic map).

EXTREMES.--Current year: Maximum discharge, 96 cfs Jan. 18 (gage height, 4.46 ft), from rating curve extended as explained below.
Period of record: Maximum discharge, 96 cfs Jan. 18, 1973 (gage height, 4.46 ft), from rating curve extended above 37 cfs on basis of computation of flow through culvert.

REMARKS.--Records good. Low flow affected by return flow from urban irrigation. Records of suspended-sediment discharge for the current year are published in Part 2 of this report.

DISCHARGE, IN CUBIC FEET PER SECOND, OCTOBER 1972 TO MARCH 1973

DAY	OCT	NOV	DEC	JAN	FEB	MAR	APR	MAY	JUN	JUL	AUG	SEP
1	--	--		--	.95	5.5						
2	--	--		--	.65	3.4						
3	--	--		--	.85	3.8						
4	--	--		--	.80	1.9						
5	--	--		--	.75	1.5						
6	--	--		--	7.8	2.3						
7	--	--		--	14	.70						
8	--	--		2.7	4.8	.55						
9	--	--		15	4.3	.48						
10	--	.65		8.5	6.3	.55						
11	.22	.17		15	5.0	--						
12	.34	.04		25	3.5	--						
13	.01	9.8		22	2.5	--						
14	.67	5.9		12	3.2	--						
15	.70	6.8		9.7	2.8	--						
16	2.7	3.6		43	2.3	--						
17	.36	1.5		29	2.0	--						
18	--	.82		38	1.4	--						
19	--	.55		7.8	.95	2.3						
20	--	.30		2.4	.65	.42						
21	--	--		1.1	.49	--						
22	--	--		.49	.45	--						
23	--	--		.40	.42	--						
24	--	--		--	.50	--						
25	--	--		--	.48	--						
26	--	--		--	2.2	--						
27	--	--		--	4.3	--						
28	--	--		--	7.8	--						
29	--	--		.65	------	--						
30	--	--		1.7	------	--						
31	--	------		1.4	------	--	------		------			------
TOTAL	--	--	--	--	82.14	--	--	--	--	--	--	--
MEAN	--	--	--	--	2.93	--	--	--	--	--	--	--
MAX	--	--	--	--	14	--	--	--	--	--	--	--
MIN	--	--	--	--	.42	--	--	--	--	--	--	--
AC-FT	--	--	--	--	163	--	--	--	--	--	--	--

11460000 CORTE MADERA CREEK AT ROSS, CALIF.

LOCATION.--Lat 37°57'45", long 122°33'20", in Punta de Quentin Grant, Marin County, on left bank behind fire station at Ross, 1.7 miles southwest of San Rafael, and 4 miles upstream from mouth.

DRAINAGE AREA.--18.1 sq mi.

PERIOD OF RECORD.--February 1951 to current year.

GAGE.--Water-stage recorder. Datum of gage is 7.97 ft above mean sea level (levels by Corps of Engineers).

AVERAGE DISCHARGE.--22 years, 28.4 cfs (20,580 acre-ft per year).

EXTREMES.--Current year: Maximum discharge, 2,690 cfs Jan. 16 (gage height, 16.16 ft); minimum daily, 0.08 cfs Sept. 27-29.
Period of record: Maximum discharge, 3,620 cfs Dec. 22, 1955 (gage height, 17.45 ft); no flow at times.

REMARKS.--Records good. Flow regulated by Phoenix Lake 1.7 miles upstream (capacity, 612 acre-ft). Diversion on tributary above station by Marin Municipal Water District.

DISCHARGE, IN CUBIC FEET PER SECOND, WATER YEAR OCTOBER 1972 TO SEPTEMBER 1973

DAY	OCT	NOV	DEC	JAN	FEB	MAR	APR	MAY	JUN	JUL	AUG	SEP
1	.21	3.9	7.0	10	73	146	15	3.5	1.3	.60	.17	.56
2	.25	3.9	6.6	9.7	61	83	14	3.6	1.3	.46	.17	.46
3	.23	12	13	8.8	152	112	12	3.6	1.1	.41	.17	.46
4	.19	21	17	8.1	140	85	12	3.5	1.0	.42	.17	.46
5	.20	9.7	9.9	7.4	99	62	11	3.5	.98	.40	.17	.56
6	.17	6.4	94	7.1	822	108	10	3.1	.98	.39	.24	.56
7	.17	8.6	78	7.1	516	69	9.5	3.4	.87	.78	.33	.39
8	.22	4.5	51	142	197	63	9.0	3.1	.82	1.1	.28	.39
9	17	5.3	35	558	286	48	9.0	3.2	.74	.78	.33	.33
10	1.6	53	26	94	320	44	9.0	3.0	.65	.78	.39	.39
11	44	63	19	665	282	38	8.5	2.8	.65	.78	.39	.39
12	49	14	16	906	294	31	7.5	2.8	.74	.78	.39	.56
13	4.5	722	14	207	256	26	9.0	2.8	.69	1.1	.39	.56
14	73	562	11	96	363	22	7.0	2.8	.69	.78	.39	.56
15	76	341	9.9	93	201	20	6.5	2.7	.71	.78	.39	.78
16	111	271	18	1,210	115	18	6.5	2.4	.79	.78	.39	.78
17	70	155	279	390	74	17	8.5	2.3	.68	.78	.39	.78
18	16	88	175	1,060	53	15	8.5	1.8	.69	1.1	.39	.56
19	9.7	67	163	274	41	99	5.7	1.9	.58	.78	.39	.78
20	6.4	49	83	136	34	60	5.3	1.7	.56	.78	.39	1.8
21	4.5	36	58	105	29	69	4.8	1.7	.51	.78	.39	.78
22	4.5	28	58	74	25	47	4.5	1.6	.47	.56	.39	1.4
23	3.9	21	41	60	22	37	4.6	1.6	.50	.46	.39	.28
24	3.9	16	33	56	45	31	4.4	1.7	.49	.46	.39	.12
25	3.9	14	25	51	29	27	4.3	1.7	.51	.46	.46	.10
26	3.9	13	21	44	192	24	4.0	1.4	.47	.39	.46	.10
27	3.9	11	19	39	356	21	4.2	1.6	.52	.28	.46	.08
28	3.5	9.6	17	37	354	19	4.3	1.7	.61	.28	.39	.08
29	3.9	8.6	14	152	------	18	4.2	1.5	.60	.20	.46	.08
30	3.9	7.6	12	179	------	22	3.7	1.6	.55	.20	.39	.12
31	3.9	------	11	96	------	19	------	1.4	------	.17	.46	------
TOTAL	523.54	2,625.1	1,434.4	6,782.2	5,431	1,500	226.5	75.0	21.75	18.80	10.96	15.25
MEAN	16.9	87.5	46.3	219	194	48.4	7.55	2.42	.73	.61	.35	.51
MAX	111	722	279	1,210	822	146	15	3.6	1.3	1.1	.46	1.8
MIN	.17	3.9	6.6	7.1	22	15	3.7	1.4	.47	.17	.17	.08
AC-FT	1,040	5,210	2,850	13,450	10,770	2,980	449	149	43	37	22	30

CAL YR 1972 TOTAL 6,849.77 MEAN 18.7 MAX 722 MIN .12 AC-FT 13,590
WTR YR 1973 TOTAL 18,664.50 MEAN 51.1 MAX 1,210 MIN .08 AC-FT 37,020

PEAK DISCHARGE (BASE, 1,000 CFS)

DATE	TIME	G.H.	DISCHARGE	DATE	TIME	G.H.	DISCHARGE
11-13	1515	12.45	1,670	1-18	0745	14.34	2,190
1-9	0915	12.56	1,700	2-6	1745	12.67	1,720
1-12	0430	12.82	1,760	2-9	2200	10.50	1,060
1-16	0800	16.16	2,690				

11460100 ARROYO CORTE MADERA DEL PRESIDIO AT MILL VALLEY, CALIF.

LOCATION.--Lat 37°53'50", long 122°32'06", in Sausalito Grant, Marin County, on right bank near south boundary of town of Mill Valley, 1 mile upstream from mouth.

DRAINAGE AREA.--4.69 sq mi.

PERIOD OF RECORD.--October 1965 to September 1973 (discontinued).

GAGE.--Water-stage recorder. Datum of gage is 1.85 ft above mean sea level.

AVERAGE DISCHARGE.--8 years, 7.99 cfs (5,790 acre-ft per year).

EXTREMES.--Current year: Maximum discharge, 1,010 cfs Jan. 12 (gage height, 7.09 ft); minimum daily, 0.19 cfs Oct. 8.
Period of record: Maximum discharge, 1,180 cfs Jan. 21, 1970 (gage height, 7.52 ft); no flow for several days in 1968.

REMARKS.--Records good. No regulation or diversion above station.

DISCHARGE, IN CUBIC FEET PER SECOND, WATER YEAR OCTOBER 1972 TO SEPTEMBER 1973

DAY	OCT	NOV	DEC	JAN	FEB	MAR	APR	MAY	JUN	JUL	AUG	SEP
1	.20	.78	3.4	4.4	17	34	13	1.7	.84	.38	.30	.25
2	.23	.76	3.3	4.1	15	21	9.9	1.7	.77	.35	.30	.25
3	.26	10	6.8	3.9	19	28	8.0	1.6	.70	.33	.30	.25
4	.26	27	7.2	3.5	19	22	6.9	1.5	.70	.29	.30	.25
5	.22	6.0	6.0	3.3	18	19	6.3	1.5	.70	.29	.30	.25
6	.21	3.4	14	3.0	121	23	5.7	1.4	.70	.33	.30	.25
7	.20	3.3	16	2.9	125	19	5.2	1.4	.58	.33	.30	.25
8	.19	2.2	15	17	51	18	4.6	1.3	.64	.33	.25	.25
9	3.4	2.5	12	88	45	15	4.2	1.3	.58	.29	.25	.25
10	.60	30	9.1	49	54	16	3.9	1.3	.52	.26	.25	.25
11	4.8	35	7.4	394	63	14	3.6	1.2	.58	.33	.25	.25
12	6.4	11	6.4	677	53	12	3.4	1.2	.64	.33	.25	.25
13	1.9	127	5.5	106	43	9.7	3.2	1.2	.58	.33	.25	.25
14	8.9	111	4.9	39	69	8.0	3.1	1.2	.58	.29	.25	.25
15	7.6	55	4.3	24	50	7.4	2.9	1.2	.58	.23	.25	.25
16	35	42	6.1	286	30	6.8	2.8	.96	.58	.33	.25	.25
17	11	25	111	107	21	6.4	2.7	.96	.58	.29	.25	.25
18	3.0	20	132	272	16	6.0	2.5	1.0	.52	.26	.25	.25
19	2.0	19	147	86	13	20	2.4	1.0	.47	.33	.25	.25
20	1.4	15	44	41	11	14	2.3	1.1	.52	.29	.25	.25
21	1.0	12	25	45	8.8	22	2.2	1.1	.53	.33	.25	.25
22	.82	9.2	24	30	7.6	19	2.2	1.0	.78	.26	.25	.25
23	.76	7.9	19	22	6.8	15	2.2	1.0	.57	.30	.25	.25
24	.78	6.9	16	21	9.0	12	2.1	1.2	.61	.30	.25	.25
25	.74	5.9	13	18	7.6	9.8	2.0	1.1	.48	.30	.25	.46
26	.76	5.1	10	15	33	8.4	1.9	1.0	.47	.30	.25	.39
27	.76	4.8	8.7	13	84	7.1	1.9	1.1	.48	.30	.25	.43
28	.68	4.2	7.5	11	67	6.4	1.9	1.2	.61	.30	.25	.36
29	.78	4.0	6.4	18	------	5.7	1.8	.84	.52	.30	.25	.33
30	.74	3.6	5.4	18	------	27	1.7	.96	.40	.30	.25	.31
31	.76	------	5.0	20	------	18	------	1.1	------	.30	.25	------
TOTAL	96.35	609.54	701.4	2,442.1	1,076.8	469.7	116.5	37.32	17.81	9.48	8.10	8.28
MEAN	3.11	20.3	22.6	78.8	38.5	15.2	3.88	1.20	.59	.31	.26	.28
MAX	35	127	147	677	125	34	13	1.7	.84	.38	.30	.46
MIN	.19	.76	3.3	2.9	6.8	5.7	1.7	.84	.40	.23	.25	.25
AC-FT	191	1,210	1,390	4,840	2,140	932	231	74	35	19	16	16

CAL YR 1972 TOTAL 2,015.24 MEAN 5.51 MAX 147 MIN .11 AC-FT 4,000
WTR YR 1973 TOTAL 5,593.38 MEAN 15.3 MAX 677 MIN .19 AC-FT 11,090

PEAK DISCHARGE (BASE, 220 CFS)

DATE	TIME	G.H.	DISCHARGE	DATE	TIME	G.H.	DISCHARGE
10-16	1930	5.26	328	1-12	0615	7.09	1,010
11-10	2315	5.11	283	1-16	0645	6.93	942
11-13	1700	5.38	364	1-18	0600	6.18	642
12-18	2015	5.42	376	2-6	1600	5.11	283

NOTE.--Stage-discharge relation indefinite July 23 to Sept. 24.

11460800 WALKER CREEK NEAR TOMALES, CALIF.

LOCATION.--Lat 38°12'35", long 122°51'35", in Nicasio Grant, Marin County, on left bank 1,300 ft upstream from Chileno Creek, and 3.5 miles southeast of Tomales.

DRAINAGE AREA.--37.1 sq mi.

PERIOD OF RECORD.--June 1959 to current year.

GAGE.--Water-stage recorder and concrete control. Datum of gage is 56.74 ft above mean sea level.

AVERAGE DISCHARGE.--14 years, 45.9 cfs (33,250 acre-ft per year).

EXTREMES.--Current year: Maximum discharge, 5,160 cfs Jan. 16 (gage height, 22.91 ft), from rating curve extended above 1,400 cfs; no flow many days.
Period of record: Maximum discharge, 5,420 cfs Jan. 5, 1966 (gage height, 22.23 ft); maximum gage height, 22.91 ft Jan. 16, 1973; no flow many days in each year.

REMARKS.--Records good. No regulation; small diversions above station for irrigation of about 50 acres (revised) and stock watering.

REVISIONS (WATER YEARS).--WRD Calif. 1969: 1967-68.

DISCHARGE, IN CUBIC FEET PER SECOND, WATER YEAR OCTOBER 1972 TO SEPTEMBER 1973

DAY	OCT	NOV	DEC	JAN	FEB	MAR	APR	MAY	JUN	JUL	AUG	SEP
1	0	.46	12	19	92	277	24	3.7	.76	.03	.01	0
2	0	.46	12	16	83	179	20	3.2	.68	.03	0	0
3	0	1.3	12	14	83	235	18	3.2	.54	.02	0	0
4	0	19	20	12	167	252	15	3.2	.48	.02	0	0
5	0	11	14	10	111	162	16	2.9	.48	.01	0	0
6	0	7.6	50	9.4	340	203	15	2.7	.42	.01	0	0
7	0	11	58	8.2	1,000	149	16	2.4	.32	0	.01	0
8	0	11	53	79	365	196	14	2.4	.28	.01	.01	0
9	0	8.8	34	746	229	129	13	2.2	.24	.01	.01	0
10	0	27	28	328	599	116	12	2.0	.21	.02	.01	0
11	0	58	23	1,850	525	117	11	1.8	.21	.02	.01	0
12	0	26	21	3,110	347	93	9.8	1.8	.21	0	.01	0
13	.01	203	19	818	539	77	9.4	1.6	.21	0	0	0
14	.04	521	17	300	571	65	9.0	1.6	.18	0	0	0
15	9.4	308	16	355	494	54	7.4	1.4	.18	0	0	0
16	5.2	272	63	2,680	281	45	7.4	1.4	.21	0	.01	0
17	6.7	134	933	774	170	40	7.4	1.2	.18	0	.01	0
18	5.7	90	511	1,890	121	32	6.6	1.2	.18	0	.01	0
19	3.4	87	519	603	97	31	6.2	1.1	.15	0	.01	0
20	2.3	69	242	278	80	77	5.8	1.1	.15	.01	.01	0
21	2.8	54	149	319	66	52	5.1	.96	.15	.01	0	0
22	2.6	43	142	168	56	51	4.8	.86	.15	.01	0	0
23	2.4	35	97	125	49	34	4.8	.96	.12	.01	0	0
24	2.1	29	85	110	113	28	4.8	1.2	.12	.01	0	0
25	1.6	24	67	115	96	26	4.8	1.4	.07	.01	0	0
26	1.3	20	53	95	348	24	4.5	1.2	.07	.01	0	.01
27	1.1	19	49	82	389	22	4.2	1.1	.05	0	0	.01
28	.89	18	46	74	616	19	4.2	.96	.07	.01	0	0
29	.79	13	35	104	------	18	3.9	.86	.07	0	0	0
30	.61	12	28	144	------	23	3.9	.76	.03	.01	0	0
31	.46	------	24	110	------	54	------	.68	------	.01	0	------
TOTAL	49.40	2,132.62	3,432	15,345.6	8,027	2,880	288.0	53.04	7.17	.28	.12	.02
MEAN	1.59	71.1	111	495	287	92.9	9.60	1.71	.24	.009	.004	.0007
MAX	9.4	521	933	3,110	1,000	277	24	3.7	.76	.03	.01	.01
MIN	0	.46	12	8.2	49	18	3.9	.68	.03	0	0	0
AC-FT	98	4,230	6,810	30,440	15,920	5,710	571	105	14	.6	.2	.04

CAL YR 1972 TOTAL 9,486.85 MEAN 25.9 MAX 933 MIN 0 AC-FT 18,820
WTR YR 1973 TOTAL 32,215.25 MEAN 88.3 MAX 3,110 MIN 0 AC-FT 63,900

PEAK DISCHARGE (BASE, 2,000 CFS)

DATE	TIME	G.H.	DISCHARGE	DATE	TIME	G.H.	DISCHARGE
1-12	1130	22.05	4,740	1-18	0945	19.08	3,460
1-16	0815	22.91	5,160				

11460920 SALMON CREEK AT BODEGA, CALIF.

LOCATION.--Lat 38°20'54", long 122°58'45", in Estero Americano Grant, Sonoma County, on left bank 100 ft upstream from private road bridge, 0.3 mile upstream from small left-bank tributary, and 0.4 mile northwest of Bodega.

DRAINAGE AREA.--15.7 sq mi.

PERIOD OF RECORD.--July 1962 to current year.

GAGE.--Water-stage recorder. Datum of gage is 81.03 ft above mean sea level.

AVERAGE DISCHARGE.--11 years, 22.8 cfs (16,520 acre-ft per year).

EXTREMES.--Current year: Maximum discharge, 2,260 cfs Jan. 11 (gage height, 19.61 ft, from inside high-water mark); no flow many days.
Period of record: Maximum discharge, 2,260 cfs Jan. 11, 1973 (gage height, 19.61 ft, from inside high-water mark); no flow many days in each year.

REMARKS.--Records good. No regulation or diversion above station. Records of water temperatures for the current year are published in Part 2 of this report.

DISCHARGE, IN CUBIC FEET PER SECOND, WATER YEAR OCTOBER 1972 TO SEPTEMBER 1973

DAY	OCT	NOV	DEC	JAN	FEB	MAR	APR	MAY	JUN	JUL	AUG	SEP
1	0	.78	6.2	12	43	76	14	2.1	.94	.14	.01	0
2	0	.92	6.0	11	35	66	11	2.1	.80	.10	.02	0
3	.09	4.3	12	10	48	152	9.8	2.1	.73	.10	.06	0
4	.20	13	19	9.5	77	76	8.9	1.9	.66	.10	.05	0
5	.18	4.8	10	8.8	45	47	14	2.0	.80	.10	.05	0
6	.15	3.2	83	8.6	239	115	13	1.6	.59	.10	.05	0
7	.08	8.4	43	8.2	176	65	12	1.6	.49	.05	.12	0
8	.06	6.6	24	112	78	95	10	1.6	.39	.01	.24	0
9	1.6	5.0	17	408	143	46	9.5	1.6	.12	.02	.16	0
10	2.9	50	15	102	226	43	8.9	1.5	.16	.01	.14	0
11	2.3	72	12	1,260	226	41	8.0	1.3	.24	0	.08	0
12	4.5	13	11	1,190	191	30	7.4	1.3	.16	0	.06	0
13	3.9	226	11	199	144	24	6.9	1.3	.44	0	.02	0
14	3.9	284	10	81	222	20	6.4	1.2	.49	.02	0	0
15	10	202	10	128	90	19	5.8	1.4	.49	.10	0	0
16	5.0	104	54	826	65	18	5.4	1.3	.54	.12	0	0
17	2.9	43	508	191	50	19	5.0	1.2	.44	.29	.01	.01
18	3.7	37	329	481	41	16	4.6	1.2	.29	.34	.01	.01
19	2.4	72	199	109	34	43	4.2	1.2	.34	.44	0	.01
20	1.6	36	69	64	30	38	3.9	1.0	.39	.39	0	.44
21	1.1	23	51	206	27	106	3.6	.94	.24	.24	0	.34
22	1.0	19	86	67	27	38	3.3	1.0	.34	.12	0	.14
23	.92	15	43	46	24	24	3.1	1.0	.34	.08	0	.80
24	.92	13	39	63	104	18	2.9	1.3	.49	.04	0	.59
25	.78	11	28	72	44	15	2.7	1.9	.59	.01	0	.29
26	.66	10	22	42	111	14	2.7	1.2	.24	.01	0	.12
27	.78	9.1	23	32	127	12	2.5	.94	.24	0	0	.12
28	.85	8.0	21	27	125	10	2.7	.80	.19	0	0	.10
29	.55	7.4	16	82	------	9.6	2.4	.73	.29	0	0	.12
30	.60	6.6	15	79	------	37	2.3	.73	.39	0	0	.16
31	.60	------	13	78	------	27	------	.80	------	0	0	------
TOTAL	54.22	1,308.10	1,805.2	6,013.1	2,792	1,359.6	196.9	41.84	12.85	2.93	1.08	3.25
MEAN	1.75	43.6	58.2	194	99.7	43.9	6.56	1.35	.43	.095	.035	.11
MAX	10	284	508	1,260	239	152	14	2.1	.94	.44	.24	.80
MIN	0	.78	6.0	8.2	24	9.6	2.3	.73	.12	0	0	0
AC-FT	108	2,590	3,580	11,930	5,540	2,700	391	83	25	5.8	2.1	6.4

CAL YR 1972 TOTAL 5,077.54 MEAN 13.9 MAX 508 MIN 0 AC-FT 10,070
WTR YR 1973 TOTAL 13,591.07 MEAN 37.2 MAX 1,260 MIN 0 AC-FT 26,960

PEAK DISCHARGE (BASE, 1,000 CFS)

DATE	TIME	G.H.	DISCHARGE	DATE	TIME	G.H.	DISCHARGE
12-17	0830	12.91	1,050	1-16	0745	16.54	1,770
1-11	1500	19.61	2,260	1-18	0830	11.89	1,020

NOTE.--No gage-height record Jan. 11, 12.

11461000 RUSSIAN RIVER NEAR UKIAH, CALIF.

LOCATION.--Lat 39°11'44", long 123°11'38", in Yokayo Rancho Grant, Mendocino County, on right bank 20 ft downstream from bridge on Lake Mendocino Drive, 0.4 mile upstream from East Fork, 0.6 mile downstream from York Creek, and 3.2 miles north of Ukiah.

DRAINAGE AREA.--100 sq mi.

PERIOD OF RECORD.--August 1911 to September 1913, October 1952 to current year. Monthly discharge only for some periods, published in WSP 1315-B.

GAGE.--Water-stage recorder. Altitude of gage is 600 ft above mean sea level. Prior to October 1952, nonrecording gage at bridge 20 ft upstream at different datum. Oct. 1, 1952, to Nov. 8, 1971, water-stage recorder at site 0.6 mile upstream at different datums.

AVERAGE DISCHARGE.--23 years, 177 cfs (128,200 acre-ft per year).

EXTREMES.--Current year: Maximum discharge, 7,320 cfs Jan. 11 (gage height, 17.18 ft); no flow for several days.
Period of record: Maximum discharge, 18,900 cfs Dec. 21, 1955 (gage height, 19.0 ft, site and datum then in use); no flow at times in 1911, 1952-53, 1960-61, 1964-65, 1970-73.

REMARKS.--Records good. No regulation. Diversions above station for irrigation of about 1,000 acres (revised).

DISCHARGE, IN CUBIC FEET PER SECOND, WATER YEAR OCTOBER 1972 TO SEPTEMBER 1973

DAY	OCT	NOV	DEC	JAN	FEB	MAR	APR	MAY	JUN	JUL	AUG	SEP
1	.10	2.3	21	105	320	608	318	29	8.9	.66	0	0
2	.11	2.5	20	98	278	436	248	30	9.2	1.4	.02	0
3	.10	4.6	21	90	248	841	210	29	8.6	1.3	.06	.01
4	.11	18	54	84	1,970	636	188	26	7.3	1.6	.06	.04
5	.12	26	43	78	1,490	447	168	24	7.7	1.5	.06	.06
6	.11	12	170	75	732	779	149	26	7.1	.75	.06	.06
7	.13	168	151	70	714	507	130	26	6.4	.31	.06	.06
8	.13	81	108	185	465	470	117	24	6.2	.04	.06	.06
9	.13	61	71	2,560	487	365	105	22	5.9	.10	.06	.06
10	.31	170	64	1,180	847	345	99	21	6.1	.10	.06	.07
11	3.5	389	51	4,710	648	327	90	22	5.5	.13	.06	.07
12	16	102	48	4,480	675	276	82	21	6.2	.13	.06	.07
13	11	215	46	1,610	495	236	86	20	6.7	.11	.05	.05
14	4.9	413	42	705	575	202	82	19	6.1	0	.06	0
15	11	242	43	605	493	177	75	17	5.0	.07	.03	0
16	9.3	380	1,250	3,140	409	159	70	16	4.6	.08	0	.01
17	6.0	151	3,040	1,420	336	150	68	15	5.5	.09	0	.05
18	4.6	104	1,500	2,050	287	133	60	14	5.9	.09	.02	.07
19	3.9	180	1,030	1,050	248	255	58	12	4.6	.09	.04	.08
20	3.5	126	475	680	208	499	52	11	4.9	.09	.05	.11
21	3.2	87	323	690	170	816	51	11	3.4	.05	.05	.11
22	2.8	70	665	423	147	519	49	12	2.8	0	.04	.11
23	2.8	57	478	353	133	365	48	12	1.8	.05	.04	.12
24	2.5	46	522	498	477	294	45	13	2.5	.09	.05	.13
25	2.0	38	317	573	914	249	42	16	2.7	.09	.05	.13
26	2.0	34	242	407	865	215	41	15	1.5	.06	.05	.13
27	2.0	29	254	337	1,030	184	37	14	.59	.02	.05	.18
28	2.0	25	220	286	923	161	35	14	.07	.07	0	.22
29	2.0	23	166	495	------	141	33	10	.11	.07	0	.22
30	2.0	21	138	438	------	658	31	9.9	.24	.04	.01	.22
31	2.3	------	120	408	------	456	------	9.7	------	0	.02	------
TOTAL	100.65	3,277.4	11,693	29,883	16,584	11,906	2,867	560.6	144.11	9.18	1.23	2.50
MEAN	3.25	109	377	964	592	384	95.6	18.1	4.80	.30	.040	.083
MAX	16	413	3,040	4,710	1,970	841	318	30	9.2	1.6	.06	.22
MIN	.10	2.3	20	70	133	133	31	9.7	.07	0	0	0
AC-FT	200	6,500	23,190	59,270	32,890	23,620	5,690	1,110	286	18	2.4	5.0

CAL YR 1972 TOTAL 40,592.97 MEAN 111 MAX 3,040 MIN 0 AC-FT 80,520
WTR YR 1973 TOTAL 77,028.67 MEAN 211 MAX 4,710 MIN 0 AC-FT 152,800

PEAK DISCHARGE (BASE, 4,000 CFS)

DATE	TIME	G.H.	DISCHARGE	DATE	TIME	G.H.	DISCHARGE
12-17	0745	15.68	5,610	1-16	0700	16.69	6,730
1-9	0800	15.14	5,040	2-4	2100	14.56	4,460
1-11	1215	17.18	7,320				

11461500 EAST FORK RUSSIAN RIVER NEAR CALPELLA, CALIF.

LOCATION.--Lat 39°14'48", long 123°07'45", in NW¼NW¼ sec.18, T.16 N., R.11 W., Mendocino County, on left bank 0.1 mile downstream from Cold Creek, and 3.9 miles east of Calpella.

DRAINAGE AREA.--92.2 sq mi.

PERIOD OF RECORD.--October 1941 to current year. Monthly discharge only for some periods, published in WSP 1315-B.

GAGE.--Water-stage recorder. Datum of gage is 787.87 ft above mean sea level. Prior to May 28, 1957, at site 1.3 miles downstream at different datum. May 28, 1957, to Apr. 5, 1966, at site 0.4 mile downstream at same datum.

AVERAGE DISCHARGE.--32 years, 340 cfs (246,300 acre-ft per year).

EXTREMES.--Current year: Maximum discharge, 5,690 cfs Jan. 16 (gage height, 15.32 ft); minimum daily, 92 cfs Aug. 4.
Period of record: Maximum discharge, 18,700 cfs Dec. 22, 1964 (gage height, 20.21 ft); minimum daily, 3.8 cfs Oct. 30, 31, 1959.

REMARKS.--Records good. Flow greatly affected by diversion from Eel River through Potter Valley powerhouse (see sta 11471000). Diversion for irrigation of about 8,000 acres above station. Records of chemical analyses and water temperatures for the current year are published in Part 2 of this report.

DISCHARGE, IN CUBIC FEET PER SECOND, WATER YEAR OCTOBER 1972 TO SEPTEMBER 1973

DAY	OCT	NOV	DEC	JAN	FEB	MAR	APR	MAY	JUN	JUL	AUG	SEP
1	325	313	313	243	533	692	488	343	144	107	98	144
2	325	313	315	245	500	616	470	335	131	105	96	140
3	323	315	320	243	506	792	464	338	128	108	101	139
4	323	323	277	238	1,870	588	455	338	128	117	92	131
5	323	318	246	254	1,320	470	446	335	121	131	104	146
6	323	318	338	365	820	721	437	335	119	114	117	225
7	320	373	325	345	892	509	428	338	114	119	119	258
8	318	333	280	484	720	491	422	330	114	117	101	263
9	318	350	260	1,890	772	533	413	350	116	111	126	260
10	318	381	263	932	1,180	556	410	360	114	104	128	253
11	318	468	258	3,580	920	533	407	333	114	111	126	250
12	325	335	112	2,960	900	509	401	328	108	116	130	263
13	320	456	240	1,220	740	485	404	340	113	104	122	273
14	320	520	248	812	748	473	407	330	119	102	133	248
15	330	429	253	872	652	461	395	308	122	105	126	308
16	320	471	866	2,720	596	449	395	298	121	121	121	308
17	318	350	1,980	1,460	559	446	395	168	122	126	126	305
18	313	340	1,010	1,990	533	437	385	135	131	126	124	308
19	315	375	660	984	521	623	385	148	146	130	131	313
20	315	348	390	796	506	808	380	148	140	130	130	330
21	260	335	318	860	500	928	378	149	125	111	124	320
22	173	328	506	664	491	700	380	139	117	114	126	333
23	173	325	396	600	488	604	380	159	131	110	133	338
24	171	323	437	784	873	556	378	155	128	111	135	338
25	169	320	323	780	940	527	365	164	122	119	131	330
26	198	318	285	632	960	509	350	153	128	116	140	335
27	310	318	343	559	888	488	340	153	117	107	144	335
28	313	315	308	533	740	473	330	149	110	102	142	330
29	313	315	273	700	------	464	338	142	111	105	142	330
30	310	313	265	656	------	612	343	124	111	105	139	333
31	310	------	255	620	------	530	------	126	------	102	135	------
TOTAL	9,110	10,639	12,663	30,021	21,668	17,583	11,969	7,551	3,665	3,506	3,842	8,187
MEAN	294	355	408	968	774	567	399	244	122	113	124	273
MAX	330	520	1,980	3,580	1,870	928	488	360	146	131	144	338
MIN	169	313	112	238	488	437	330	124	108	102	92	131
AC-FT	18,070	21,100	25,120	59,550	42,980	34,880	23,740	14,980	7,270	6,950	7,620	16,240

CAL YR 1972 TOTAL 107,516 MEAN 294 MAX 1,980 MIN 27 AC-FT 213,300
WTR YR 1973 TOTAL 140,404 MEAN 385 MAX 3,580 MIN 92 AC-FT 278,500

PEAK DISCHARGE (BASE, 3,300 CFS)

DATE	TIME	G.H.	DISCHARGE	DATE	TIME	G.H.	DISCHARGE
12-17	0730	13.46	4,070	1-16	0800	15.32	5,690
1-9	1000	13.18	3,840	2-4	unknown	12.46	3,300
1-11	1200	14.91	5,340				

11461800 LAKE MENDOCINO NEAR UKIAH, CALIF.

LOCATION.--Lat 39°11'53", long 123°10'50", in Yokayo Rancho Grant, Mendocino County, in intake tower 30 ft upstream from Coyote Dam on East Fork Russian River, and 3.6 miles northeast of Ukiah.

DRAINAGE AREA.--105 sq mi.

PERIOD OF RECORD.--October 1965 to current year. Records prior to October 1965 in files of Corps of Engineers.

GAGE.--Water-stage recorder. Datum of gage is at mean sea level (levels by Corps of Engineers).

EXTREMES.--Current year: Maximum contents, 92,800 acre-ft Jan. 13 (elevation, 749.05 ft); minimum, 51,700 acre-ft Feb. 21, 22; minimum elevation, 724.60 ft Feb. 22.
Period of record: Maximum contents, 114,800 acre-ft Jan. 24, 1970 (elevation, 760.86 ft); minimum, 42,500 acre-ft Sept. 10, 11, 1970 (elevation, 718.26 ft).

REMARKS.--Reservoir is formed by earthfill dam; storage began in November 1958. Capacity, 122,900 acre-ft between elevations 637.0 (invert of outlet tunnel) and 764.8 ft (spillway crest) above mean sea level. Storage affected by diversions from Eel River through Potter Valley powerhouse (see sta 11471000). Water is released down East Fork Russian River for irrigation and recreation use. Records given herein represent total contents.

CAPACITY TABLE (ELEVATION, IN FEET, AND CONTENTS, IN ACRE-FEET)

637	135	660	2,110	685	10,900	720	45,000
640	250	665	3,190	690	13,700	730	60,100
645	535	670	4,590	695	17,100	740	76,900
650	900	675	6,280	700	21,100	750	94,600
655	1,380	680	8,430	710	31,620	765	122,900

CONTENTS, IN ACRE-FEET, AT 2400, WATER YEAR OCTOBER 1972 TO SEPTEMBER 1973

DAY	OCT	NOV	DEC	JAN	FEB	MAR	APR	MAY	JUN	JUL	AUG	SEP
1	60,300	60,900	65,800	70,300	69,400	63,800	77,000	88,500	89,600	80,900	66,700	54,300
2	60,400	60,900	65,800	70,200	70,300	65,000	77,400	88,500	89,500	80,400	66,200	54,000
3	60,500	61,100	65,900	70,100	71,200	66,700	77,500	88,600	89,400	80,000	65,700	53,700
4	60,700	61,200	65,900	70,000	75,100	67,800	77,800	88,600	89,200	79,600	65,200	53,300
5	60,800	61,200	65,900	69,900	75,300	68,700	78,100	88,500	89,100	79,300	64,700	53,000
6	60,800	61,300	66,000	70,000	72,700	70,300	78,500	88,500	88,900	78,900	64,300	52,900
7	60,800	61,600	66,200	70,100	71,600	71,300	78,800	88,500	88,700	78,500	63,900	52,800
8	60,900	61,700	66,200	70,600	71,100	72,200	79,100	88,500	88,500	78,000	63,400	52,800
9	60,900	61,900	66,100	75,200	71,500	72,500	79,400	88,500	88,300	77,600	63,000	52,700
10	61,000	62,200	66,100	76,300	74,200	72,400	79,800	88,500	88,000	77,100	62,600	52,600
11	61,100	62,500	66,000	84,200	76,300	72,200	80,200	88,500	87,700	76,500	62,200	52,500
12	61,300	62,600	65,700	91,200	77,100	72,000	80,700	88,500	87,400	76,000	61,800	52,400
13	61,400	63,100	65,600	90,600	76,000	71,800	81,000	88,500	87,100	75,400	61,300	52,400
14	61,400	63,700	65,600	85,300	74,800	71,800	81,000	88,800	86,700	74,800	60,900	52,300
15	61,600	64,000	65,500	83,000	70,900	71,800	82,100	89,300	86,500	74,300	60,500	52,300
16	61,700	64,400	67,100	89,400	67,000	71,900	82,700	89,900	86,100	73,700	60,100	52,300
17	61,700	64,500	71,700	89,200	63,400	71,900	83,400	90,200	85,900	73,300	59,600	52,300
18	61,800	64,700	74,100	90,500	59,900	71,900	84,200	90,200	85,600	72,900	59,200	52,400
19	61,800	64,900	74,600	84,500	56,100	72,500	84,800	90,100	85,400	72,500	58,700	52,600
20	61,800	65,000	73,800	78,600	52,800	73,500	85,500	90,100	85,100	72,100	58,300	52,700
21	61,800	65,100	71,400	72,400	51,700	74,900	85,900	90,000	84,700	71,700	57,900	52,900
22	61,600	65,200	69,800	66,300	52,300	75,300	86,300	90,000	84,300	71,300	57,500	53,100
23	61,400	65,300	70,000	61,000	53,000	75,200	86,700	89,900	83,900	71,000	57,200	53,400
24	61,100	65,300	70,400	59,900	54,900	75,100	87,100	90,000	83,500	70,600	56,800	53,700
25	60,900	65,400	70,400	61,500	56,800	74,800	87,600	89,900	83,200	70,200	56,500	54,000
26	60,700	65,500	70,400	62,700	59,100	74,500	87,900	89,900	82,900	69,700	56,100	54,200
27	60,700	65,500	70,600	63,800	61,100	74,200	88,000	89,900	82,500	69,200	55,800	54,500
28	60,700	65,600	70,600	64,800	62,500	74,000	88,100	89,900	80,100	68,700	55,500	54,600
29	60,800	65,600	70,500	66,100	------	74,300	88,200	89,900	81,700	68,200	55,200	54,700
30	60,800	65,700	70,500	67,300	------	75,500	88,400	89,900	81,200	67,700	54,900	54,800
31	60,800	------	70,400	68,400	------	76,300	------	89,700	------	67,200	54,600	------
MAX	61,800	65,700	74,600	91,200	77,100	76,300	88,400	90,200	89,600	80,900	66,700	54,800
MIN	60,300	60,900	65,500	59,900	51,700	63,800	77,000	88,500	80,100	67,200	54,600	52,300
(a)	730.46	733.50	736.38	735.18	731.52	739.69	746.64	747.37	742.63	734.42	726.55	726.67
(b)	+500	+4,900	+4,700	-2,000	-5,900	+13,800	+12,100	+1,300	-8,500	-14,000	-12,600	+200

CAL YR 1972 b +2,900
WTR YR 1973 b -5,500

a Elevation, in feet, at end of month.
b Change in contents, in acre-feet.

11462000 EAST FORK RUSSIAN RIVER NEAR UKIAH, CALIF.

LOCATION.--Lat 39°11'45", long 123°11'30", in Yokayo Rancho Grant, Mendocino County, on right bank of outlet channel, 500 ft downstream from Coyote Dam, 1,300 ft upstream from mouth, and 3.2 miles northeast of Ukiah.

DRAINAGE AREA.--105 sq mi.

PERIOD OF RECORD.--August 1911 to September 1913, October 1951 to June 1956, October 1957 to current year.

GAGE.--Water-stage recorder and concrete control. Datum of gage is 614.41 ft above mean sea level. Prior to October 1951, nonrecording gage at site 0.5 mile upstream at different datum. October 1951 to June 1956, water-stage recorder at site 1.0 mile upstream at different datum.

AVERAGE DISCHARGE (unadjusted).--7 years (1911-13, 1951-55, 1957-58), 356 cfs (257,900 acre-ft per year); 14 years (1959-73), 351 cfs (254,300 acre-ft per year).

EXTREMES.--Current year: Maximum discharge, 4,520 cfs Jan. 13 (gage height, 7.39 ft); minimum daily, 0.02 cfs Apr. 17.

Period of record (prior to regulation by Lake Mendocino): Maximum discharge, 13,300 cfs Dec. 21, 1955 (gage height, 16.86 ft, site and datum then in use), from rating curve extended above 1,700 cfs on basis of maximum flow at station upstream which was defined to 8,600 cfs; no flow Aug. 13-15, 1913.

1957 to current year: Maximum discharge, 7,350 cfs Jan. 24, 1970 (gage height, 10.84 ft); minimum daily, 0.02 cfs Apr. 17, 1973.

REMARKS.--Records good. Flow affected by diversion from Eel River through Potter Valley powerhouse (see sta 11471000) and since November 1958 by storage in Lake Mendocino 500 ft upstream (see sta 11461800). Diversions above station for irrigation of about 8,000 acres (revised). Records of chemical analyses and water temperatures for the current year are published in Part 2 of this report.

DISCHARGE, IN CUBIC FEET PER SECOND, WATER YEAR OCTOBER 1972 TO SEPTEMBER 1973

DAY	OCT	NOV	DEC	JAN	FEB	MAR	APR	MAY	JUN	JUL	AUG	SEP
1	274	278	286	286	32	32	152	274	190	282	370	259
2	274	278	286	286	32	32	286	286	190	282	361	259
3	227	282	290	286	32	33	402	286	190	282	334	259
4	206	282	290	286	33	33	306	306	190	282	330	259
5	282	278	290	286	1,290	33	248	318	193	282	330	255
6	282	278	290	286	2,080	33	252	318	193	298	330	255
7	282	282	286	286	1,580	33	252	318	203	322	330	252
8	282	282	286	286	1,030	33	252	322	210	322	330	252
9	282	282	286	89	679	391	234	322	210	343	330	252
10	282	282	286	496	1.1	656	184	322	210	357	326	252
11	286	282	286	8.2	.4	656	160	322	223	357	326	252
12	282	282	290	5.7	634	612	160	322	230	357	326	252
13	282	286	286	2,060	1,400	556	163	322	230	357	326	252
14	282	252	286	3,700	1,440	496	163	149	230	357	318	252
15	282	286	286	2,250	2,630	436	163	36	230	357	318	252
16	282	286	290	7.7	2,670	413	63	36	230	334	318	248
17	282	286	15	1,880	2,480	413	.02	38	230	322	318	237
18	282	286	1.1	1,830	2,450	413	21	100	241	302	318	234
19	282	286	447	4,230	2,410	413	38	152	252	286	310	216
20	282	286	743	4,140	2,250	413	60	155	252	286	310	210
21	282	286	1,660	4,060	1,000	419	152	155	270	286	286	200
22	282	286	1,410	3,980	203	569	152	155	282	286	270	193
23	282	286	282	3,300	31	672	152	155	282	286	270	193
24	282	286	282	1,430	32	672	152	155	282	286	270	178
25	282	286	282	32	31	672	152	155	282	348	270	166
26	278	286	286	32	32	672	152	157	282	357	270	166
27	278	286	286	32	32	672	213	160	282	370	267	200
28	278	286	286	32	32	529	248	160	282	370	267	223
29	282	286	286	32	------	314	252	160	282	370	267	230
30	278	286	286	32	------	187	252	160	282	370	267	230
31	278	------	286	32	------	152	------	184	------	370	263	------
TOTAL	8,579	8,482	11,438.1	35,978.6	26,546.5	11,660	5,436.02	6,460	7,135	10,066	9,526	6,938
MEAN	277	283	369	1,161	948	376	181	208	238	325	307	231
MAX	286	286	1,660	4,230	2,670	672	402	322	282	370	370	259
MIN	206	252	1.1	5.7	.40	32	.02	36	190	282	263	166
AC-FT	17,020	16,820	22,690	71,360	52,650	23,130	10,780	12,810	14,150	19,970	18,890	13,760

CAL YR 1972 TOTAL 106,324.10 MEAN 291 MAX 1,660 MIN 1.1 AC-FT 210,900
WTR YR 1973 TOTAL 148,245.22 MEAN 406 MAX 4,230 MIN .02 AC-FT 294,000

11462500 RUSSIAN RIVER NEAR HOPLAND, CALIF.

LOCATION.--Lat 39°01'36", long 123°07'46", in Rancho de Sanel Grant, Mendocino County, on right bank at abandoned highway bridge, 0.2 mile downstream from McNab Creek, 4 miles north of Hopland.

DRAINAGE AREA.--362 sq mi.

PERIOD OF RECORD.--October 1939 to current year. Monthly discharge only for some periods, published in WSP 1315-B.

GAGE.--Water-stage recorder. Datum of gage is 497.61 ft above mean sea level. Prior to Sept. 9, 1943, nonrecording gage at same site and datum.

AVERAGE DISCHARGE.--34 years, 724 cfs (524,500 acre-ft per year).

EXTREMES.--Current year: Maximum discharge, 14,000 cfs Jan. 12 (gage height, 16.55 ft); minimum daily, 115 cfs May 18.
Period of record: Maximum discharge, 45,000 cfs Dec. 22, 1955 (gage height, 27.00 ft); minimum daily, 26 cfs Dec. 18, 1943, June 26, 1949.
Flood in December 1937 reached a stage of 30.0 ft, from floodmarks.

REMARKS.--Records good. Diversions for irrigation of about 11,800 acres above station. Flow also affected by diversion into basin (see REMARKS for East Fork Russian River stations) and since November 1958 by storage in Lake Mendocino 15 miles upstream (see sta 11461800). Records of water temperatures for the current year are published in Part 2 of this report.

REVISIONS.--WSP 1041: Drainage area.

DISCHARGE, IN CUBIC FEET PER SECOND, WATER YEAR OCTOBER 1972 TO SEPTEMBER 1973

DAY	OCT	NOV	DEC	JAN	FEB	MAR	APR	MAY	JUN	JUL	AUG	SEP
1	269	283	333	547	815	1,410	706	311	215	271	299	257
2	267	283	333	526	734	1,100	672	324	219	275	299	257
3	266	290	328	505	683	1,430	740	324	219	268	287	257
4	177	296	351	490	3,250	1,360	678	328	219	264	275	253
5	260	316	360	474	4,460	1,050	574	337	219	257	279	253
6	265	290	558	464	3,620	1,400	547	337	225	257	279	253
7	267	394	552	454	3,330	1,090	515	337	215	275	279	253
8	269	385	490	574	2,230	1,020	495	337	229	279	279	250
9	271	337	420	4,930	2,030	1,040	474	337	222	311	275	261
10	273	479	400	3,070	2,360	1,240	429	328	229	299	275	253
11	281	887	378	7,740	1,850	1,240	369	324	236	299	275	250
12	307	450	373	10,200	1,950	1,120	351	324	250	303	271	253
13	298	555	364	5,260	2,380	1,020	346	319	253	299	299	253
14	291	1,160	360	5,530	2,380	921	342	268	253	295	299	253
15	304	683	360	3,980	3,220	838	328	149	253	295	275	253
16	298	1,060	1,830	7,920	3,320	768	291	132	250	291	275	257
17	291	606	4,850	5,570	2,970	745	219	135	253	275	279	253
18	287	505	2,260	7,020	2,810	717	199	115	261	271	279	239
19	287	547	2,540	6,780	2,680	850	219	173	283	257	283	232
20	287	521	1,570	5,600	2,520	1,340	192	183	333	253	283	222
21	287	454	1,810	5,630	1,650	1,570	264	189	287	250	275	212
22	287	420	2,650	4,890	826	1,470	268	189	295	250	261	199
23	283	396	1,270	4,270	536	1,350	268	186	299	250	264	199
24	283	378	1,280	2,840	1,090	1,210	264	189	303	253	261	195
25	283	369	969	1,510	2,030	1,120	257	195	299	271	261	176
26	279	360	826	1,130	1,770	1,060	261	195	291	337	264	176
27	279	355	803	933	1,920	999	271	195	303	295	264	186
28	283	346	768	815	2,080	891	307	208	279	295	264	219
29	283	342	666	1,020	------	706	311	199	283	299	261	236
30	287	337	617	1,110	------	957	311	192	275	299	261	239
31	287	------	574	945	------	945	------	195	------	333	261	------
TOTAL	8,636	14,084	31,243	102,727	61,494	33,977	11,468	7,554	7,750	8,726	8,541	7,049
MEAN	279	469	1,008	3,314	2,196	1,096	382	244	258	281	276	235
MAX	307	1,160	4,850	10,200	4,460	1,570	740	337	333	337	299	261
MIN	177	283	328	454	536	706	192	115	215	250	261	176
AC-FT	17,130	27,940	61,970	203,800	122,000	67,390	22,750	14,980	15,370	17,310	16,940	13,980

CAL YR 1972 TOTAL 176,369 MEAN 482 MAX 4,850 MIN 87 AC-FT 349,800
WTR YR 1973 TOTAL 303,249 MEAN 831 MAX 10,200 MIN 115 AC-FT 601,500

11463000 RUSSIAN RIVER NEAR CLOVERDALE, CALIF.

LOCATION.--Lat 38°52'16", long 123°03'09", in NW¼NW¼ sec.23, T.12 N., R.11 W., Mendocino County, on left bank 0.3 mile downstream from Cummisky Creek, and 5.5 miles northwest of Cloverdale.

DRAINAGE AREA.--503 sq mi.

PERIOD OF RECORD.--July 1951 to current year.

GAGE.--Water-stage recorder. Altitude of gage is 350 ft (from topographic map). Prior to July 30, 1970, at site 0.2 mile upstream at different datum.

AVERAGE DISCHARGE.--22 years, 991 cfs (718,000 acre-ft per year).

EXTREMES.--Current year: Maximum discharge, 18,900 cfs Jan. 16 (gage height, 16.69 ft); minimum daily, 103 cfs May 18.
Period of record: Maximum discharge, 55,200 cfs Dec. 22, 1964 (gage height, 31.60 ft, site and datum then in use); minimum daily, 80 cfs May 25, 1970.

REMARKS.--Records good. Diversions for irrigation of about 15,300 acres above station. Flow also affected by diversion into basin (see REMARKS for East Fork Russian River stations) and since November 1958 by storage in Lake Mendocino 28 miles upstream (see sta 11461800).

DISCHARGE, IN CUBIC FEET PER SECOND, WATER YEAR OCTOBER 1972 TO SEPTEMBER 1973

DAY	OCT	NOV	DEC	JAN	FEB	MAR	APR	MAY	JUN	JUL	AUG	SEP
1	281	299	401	659	1,330	2,720	1,060	400	198	269	290	254
2	281	299	397	619	1,150	2,110	935	418	202	275	290	251
3	277	304	396	592	1,090	2,490	1,020	420	201	270	290	250
4	201	327	416	553	5,190	2,540	955	427	202	265	290	246
5	245	334	428	528	6,700	1,930	805	437	193	265	290	246
6	268	324	720	512	5,130	2,640	750	436	191	253	290	251
7	273	486	747	500	5,780	2,240	694	434	185	272	285	251
8	278	604	650	792	3,730	1,910	658	433	202	286	285	247
9	282	452	543	8,370	3,540	1,690	622	430	206	292	285	242
10	289	622	506	4,620	4,820	1,930	570	413	212	307	285	245
11	302	1,180	478	9,480	3,770	1,920	504	405	219	310	285	244
12	340	653	464	13,800	3,290	1,710	473	401	232	312	285	245
13	334	1,660	453	6,840	3,660	1,530	459	398	239	312	285	244
14	320	2,070	444	6,460	3,760	1,380	463	371	242	311	285	245
15	430	1,450	440	5,250	4,280	1,240	434	182	238	310	285	249
16	356	1,820	1,770	13,600	4,370	1,120	410	138	233	307	283	255
17	329	997	6,990	7,980	3,890	1,080	311	117	235	280	284	255
18	318	760	3,100	11,000	3,640	1,020	270	103	237	275	289	234
19	314	775	3,860	8,230	3,430	1,410	275	143	250	253	292	230
20	312	750	2,230	6,440	3,260	2,280	243	180	255	249	293	221
21	309	617	2,120	6,490	2,450	2,540	307	189	250	246	288	209
22	308	554	3,410	5,600	1,360	2,410	341	183	267	247	268	191
23	308	515	1,910	5,080	905	2,140	340	178	273	248	263	193
24	308	484	1,820	3,640	3,110	1,880	336	181	276	243	262	190
25	307	463	1,380	2,300	4,500	1,710	320	193	279	242	262	170
26	305	449	1,130	1,680	3,730	1,590	332	193	270	264	264	164
27	304	438	1,040	1,360	3,780	1,470	343	191	266	291	265	162
28	301	421	1,040	1,160	3,810	1,340	400	191	265	290	263	206
29	299	412	859	1,730	------	1,090	406	185	265	290	262	235
30	299	404	767	2,160	------	1,150	404	178	267	290	258	244
31	299	------	708	1,600	------	1,540	------	174	------	290	257	------
TOTAL	9,377	20,923	41,617	139,625	99,455	55,750	15,440	8,722	7,050	8,614	8,658	6,869
MEAN	302	697	1,342	4,504	3,552	1,798	515	281	235	278	279	229
MAX	430	2,070	6,990	13,800	6,700	2,720	1,060	437	279	312	293	255
MIN	201	299	396	500	905	1,020	243	103	185	242	257	162
AC-FT	18,600	41,500	82,550	276,900	197,300	110,600	30,630	17,300	13,980	17,090	17,170	13,620

CAL YR 1972 TOTAL 216,344 MEAN 591 MAX 6,990 MIN 139 AC-FT 429,100
WTR YR 1973 TOTAL 422,100 MEAN 1,156 MAX 13,800 MIN 103 AC-FT 837,200

11463900 MAACAMA CREEK NEAR KELLOGG, CALIF.

LOCATION.--Lat 38°38'25", long 122°45'45", in SW¼ sec.9, T.9 N., R.8 W., Sonoma County, on right bank 0.5 mile downstream from Redwood Creek, and 4.4 miles west of Kellogg.

DRAINAGE AREA.--43.4 sq mi.

PERIOD OF RECORD.--Occasional low-flow measurements and annual maximum, water years 1958-60, December 1960 to current year.

GAGE.--Water-stage recorder. Datum of gage is 188.91 ft above mean sea level. Prior to Dec. 20, 1960, crest-stage gage only at site 700 ft upstream at different datum.

AVERAGE DISCHARGE.--12 years (1961-73), 87.6 cfs (63,470 acre-ft per year).

EXTREMES.--Current year: Maximum discharge, 7,460 cfs Jan. 16 (gage height, 16.33 ft); minimum daily, 0.22 cfs Aug. 23.
Period of record: Maximum discharge, 8,920 cfs Dec. 22, 1964 (gage height, 17.56 ft); no flow many days in 1964 and 1968.

REMARKS.--Records good except those for periods of no gage-height record, which are poor. No regulation or diversion above station.

DISCHARGE, IN CUBIC FEET PER SECOND, WATER YEAR OCTOBER 1972 TO SEPTEMBER 1973

DAY	OCT	NOV	DEC	JAN	FEB	MAR	APR	MAY	JUN	JUL	AUG	SEP
1	1.2	1.6	19	43	179	256	63	17	6.1	1.4	.70	.37
2	1.4	1.8	18	41	153	207	57	18	7.0	1.3	.66	.33
3	1.3	3.4	21	39	148	265	51	17	6.2	1.2	.60	.39
4	1.3	16	31	36	264	219	50	17	5.8	1.1	.58	.42
5	1.3	6.8	21	34	207	187	46	15	5.3	1.0	.55	.49
6	1.1	4.0	68	32	367	304	45	15	5.0	1.1	.54	.49
7	.76	12	44	30	707	213	42	15	4.5	1.4	.51	.44
8	.94	11	35	100	365	198	40	14	4.7	1.4	.50	.46
9	1.2	6.8	29	1,010	400	164	38	12	4.0	1.3	.48	.48
10	1.8	39	27	364	724	151	37	13	4.5	1.2	.48	.42
11	3.8	75	25	1,860	577	137	35	12	3.8	1.1	.52	.53
12	5.8	21	25	2,330	493	117	34	11	3.5	1.1	.47	.72
13	4.5	616	24	672	425	105	35	11	3.3	1.1	.43	.64
14	5.4	627	23	360	453	95	33	12	3.0	1.0	.40	.70
15	12	320	22	501	329	87	32	10	2.9	1.0	.37	.78
16	12	217	76	3,290	258	81	31	9.3	2.8	1.0	.33	.82
17	6.4	102	513	884	212	79	31	9.1	2.8	1.0	.30	.83
18	4.1	78	356	1,570	179	66	25	8.6	2.7	.96	.27	.64
19	3.3	65	310	574	151	118	25	9.4	2.6	.94	.30	.78
20	2.8	51	166	368	133	126	24	10	2.5	.92	.33	1.1
21	2.5	44	127	353	116	146	22	9.8	2.4	.92	.28	1.5
22	2.4	38	266	228	102	114	22	8.7	2.3	.88	.25	1.9
23	2.2	33	158	180	94	91	22	8.8	2.2	.86	.22	2.1
24	2.0	30	143	174	576	85	22	9.7	2.1	.84	.24	2.5
25	1.4	27	102	166	295	81	21	11	2.0	.80	.28	3.4
26	1.6	26	85	133	459	78	21	10	1.9	.78	.50	3.3
27	1.7	24	79	115	427	72	20	9.6	1.8	.77	.51	2.9
28	1.7	22	70	102	313	67	20	8.5	1.7	.75	.48	2.7
29	1.7	20	60	285	------	58	20	6.2	1.6	.74	.58	2.5
30	1.5	19	53	318	------	79	19	4.6	1.5	.74	.56	2.3
31	1.5	------	48	237	------	79	------	5.0	------	.72	.43	------
TOTAL	92.60	2,557.4	3,044	16,429	9,106	4,125	983	347.3	102.5	31.32	13.65	36.93
MEAN	2.99	85.2	98.2	530	325	133	32.8	11.2	3.42	1.01	.44	1.23
MAX	12	627	513	3,290	724	304	63	18	7.0	1.4	.70	3.4
MIN	.76	1.6	18	30	94	58	19	4.6	1.5	.72	.22	.33
AC-FT	184	5,070	6,040	32,590	18,060	8,180	1,950	689	203	62	27	73

CAL YR 1972 TOTAL 13,404.68 MEAN 36.6 MAX 627 MIN .04 AC-FT 26,590
WTR YR 1973 TOTAL 36,868.70 MEAN 101 MAX 3,290 MIN .22 AC-FT 73,130

PEAK DISCHARGE (BASE, 2,000 CFS)

DATE	TIME	G.H.	DISCHARGE	DATE	TIME	G.H.	DISCHARGE
11-13	2230	11.14	3,120	1-16	0600	16.33	7,460
1-9	1015	9.33	2,020	1-18	0700	12.37	4,020
1-12	0100	14.55	5,770				

NOTE.--No gage-height record May 25 to July 2, July 10 to Aug. 30.

11464000 RUSSIAN RIVER NEAR HEALDSBURG, CALIF.

LOCATION.--Lat 38°36'48", long 122°50'07", in Sotoyome Grant, Sonoma County, on left bank 2 miles east of Healdsburg, and 3.5 miles upstream from Dry Creek.

DRAINAGE AREA.--793 sq mi.

PERIOD OF RECORD.--October 1939 to current year. Monthly discharge only for some periods, published in WSP 1315-B.

GAGE.--Water-stage recorder. Datum of gage is 77.01 ft above mean sea level.

AVERAGE DISCHARGE.--34 years, 1,432 cfs (1,037,000 acre-ft per year).

EXTREMES.--Current year: Maximum discharge, 39,700 cfs Jan. 16 (gage height, 18.68 ft); minimum daily, 160 cfs Sept. 28.
Period of record: Maximum discharge, 71,300 cfs Dec. 23, 1964 (gage height, 27.00 ft); maximum gage height, 30.0 ft Feb. 28, 1940; minimum daily discharge, 38 cfs July 2, 1950.
Flood in December 1937 reached a stage of 30.8 ft, from floodmarks.

REMARKS.--Records good. Several diversions for irrigation of about 17,800 acres above station. Flow also affected by diversion into basin (see REMARKS for East Fork Russian River stations) and since November 1958 by storage in Lake Mendocino 63 miles upstream (see sta 11461800). Records of water temperatures for the current year are published in Part 2 of this report.

REVISIONS (WATER YEARS).--WSP 981: 1942.

DISCHARGE, IN CUBIC FEET PER SECOND, WATER YEAR OCTOBER 1972 TO SEPTEMBER 1973

DAY	OCT	NOV	DEC	JAN	FEB	MAR	APR	MAY	JUN	JUL	AUG	SEP
1	267	307	535	972	2,710	5,040	1,570	496	207	250	286	215
2	267	307	518	908	2,320	3,920	1,340	496	218	258	286	215
3	267	319	518	852	2,160	3,810	1,320	496	229	262	286	218
4	263	344	552	804	4,820	4,520	1,300	496	229	258	278	212
5	220	371	558	756	10,900	3,300	1,180	502	215	243	258	210
6	241	358	780	726	8,510	4,250	1,080	502	207	240	250	210
7	255	371	940	702	13,200	3,830	1,010	502	199	232	250	210
8	263	552	860	1,100	8,160	3,360	956	502	191	250	243	210
9	275	518	744	11,700	6,300	2,750	900	491	196	260	246	207
10	283	552	678	10,600	10,600	2,780	852	480	193	260	243	202
11	307	1,120	642	15,200	9,000	2,810	780	463	202	282	243	207
12	344	1,040	606	32,400	6,660	2,520	732	452	215	286	246	212
13	390	2,140	594	16,500	6,990	2,280	708	441	218	290	250	217
14	367	6,910	576	11,200	7,120	2,060	696	436	229	304	246	217
15	463	4,000	570	9,190	6,620	1,890	666	395	226	308	229	217
16	540	4,600	685	31,600	6,550	1,740	642	308	229	312	254	220
17	436	2,700	9,710	18,400	5,600	1,640	588	248	243	308	266	259
18	390	1,360	6,370	25,900	5,000	1,540	524	220	266	282	254	217
19	362	1,200	6,340	16,400	4,570	1,680	480	199	236	266	262	208
20	349	1,120	3,680	11,500	4,230	3,380	469	208	236	243	258	211
21	340	964	2,840	10,800	3,700	3,190	441	227	232	232	254	202
22	335	852	4,210	8,930	2,320	3,510	480	231	229	226	254	199
23	327	768	3,340	7,760	1,760	2,870	491	212	254	222	240	196
24	323	708	2,500	6,000	5,720	2,520	485	225	278	218	229	190
25	319	672	2,080	4,640	8,860	2,280	474	222	286	212	232	184
26	315	642	1,760	3,130	7,320	2,120	463	219	278	207	240	172
27	315	606	1,540	2,540	7,630	1,990	452	216	266	215	240	163
28	315	582	1,510	2,210	7,250	1,860	469	222	262	240	240	160
29	315	564	1,290	3,060	------	1,620	496	219	254	266	232	181
30	311	546	1,160	4,840	------	1,450	502	216	250	282	222	202
31	307	------	1,050	3,350	------	2,040	------	215	------	290	215	------
TOTAL	10,071	37,093	59,736	274,670	176,580	84,550	22,546	10,757	6,973	8,004	7,732	6,143
MEAN	325	1,236	1,927	8,860	6,306	2,727	752	347	232	258	249	205
MAX	540	6,910	9,710	32,400	13,200	5,040	1,570	502	286	312	286	259
MIN	220	307	518	702	1,760	1,450	441	199	191	207	215	160
AC-FT	19,980	73,570	118,500	544,800	350,200	167,700	44,720	21,340	13,830	15,880	15,340	12,180

CAL YR 1972 TOTAL 280,611 MEAN 767 MAX 9,710 MIN 161 AC-FT 556,600
WTR YR 1973 TOTAL 704,855 MEAN 1,931 MAX 32,400 MIN 160 AC-FT 1,398,000

11464500 DRY CREEK NEAR CLOVERDALE, CALIF.

LOCATION.--Lat 38°44'59", long 123°05'28", in NE¼NE¼ sec.5, T.10 N., R.11 W., Sonoma County, on left bank 500 ft downstream from Smith Creek, and 5 miles southwest of Cloverdale.

DRAINAGE AREA.--87.8 sq mi.

PERIOD OF RECORD.--October 1941 to current year. Monthly discharge only for some periods, published in WSP 1315-B.

GAGE.--Water-stage recorder. Datum of gage is 304.04 ft above mean sea level.

AVERAGE DISCHARGE.--32 years, 161 cfs (116,600 acre-ft per year).

EXTREMES.--Current year: Maximum discharge, 9,920 cfs Jan. 12 (gage height, 12.94 ft); minimum daily, 0.61 cfs Aug. 19.
Period of record: Maximum discharge, 18,100 cfs Dec. 22, 1964 (gage height, 18.09 ft); minimum, 0.10 cfs several days in 1944, 1949, 1951-53, 1962, 1964.
Flood in December 1937 reached a stage of about 18 ft, from floodmarks.

REMARKS.--Records good. No regulation or diversion above station. Records of water temperatures for the current year are published in Part 2 of this report.

REVISIONS (WATER YEARS).--WSP 1395: 1942(M), 1943, 1946(M), 1951-54(M), drainage area.

DISCHARGE, IN CUBIC FEET PER SECOND, WATER YEAR OCTOBER 1972 TO SEPTEMBER 1973

DAY	OCT	NOV	DEC	JAN	FEB	MAR	APR	MAY	JUN	JUL	AUG	SEP
1	1.5	4.0	33	78	361	756	147	32	9.1	2.9	1.3	.78
2	1.5	4.3	32	70	314	598	135	31	8.9	2.8	1.1	.76
3	1.2	9.4	40	64	319	682	125	30	8.3	2.8	1.1	.76
4	1.2	28	52	58	1,560	580	118	29	7.8	2.7	1.0	.76
5	1.0	17	42	54	1,400	478	110	29	7.4	2.8	.98	.76
6	1.0	14	147	50	1,120	676	104	27	6.9	2.6	1.0	.75
7	1.0	91	102	46	1,340	520	98	26	6.5	2.5	.99	.84
8	1.0	50	87	372	926	502	92	24	6.4	2.3	.97	.84
9	1.5	43	69	2,440	934	405	88	23	6.8	2.4	.97	.76
10	1.9	105	63	1,300	1,290	360	84	22	7.0	2.3	.89	.84
11	12	147	56	4,030	1,090	324	78	21	5.8	2.2	.97	.87
12	32	59	54	5,330	889	287	74	19	5.2	2.2	.89	.80
13	19	830	51	2,250	777	255	80	18	4.8	2.2	.89	.79
14	18	795	46	1,440	854	232	72	17	4.6	2.2	.82	.85
15	114	582	48	1,310	707	214	67	16	4.4	2.2	.78	.84
16	47	480	319	4,910	604	197	67	15	4.2	2.1	.74	.84
17	21	211	2,130	2,600	496	186	65	14	4.1	2.0	.70	.84
18	16	159	1,210	3,580	415	172	61	14	4.0	2.0	.62	.92
19	13	147	928	1,860	356	370	59	13	3.8	2.0	.61	1.0
20	9.9	122	554	1,180	315	395	56	13	3.7	1.9	.66	1.4
21	7.9	98	388	920	283	390	54	13	3.6	1.9	.67	1.4
22	7.0	83	540	625	255	324	51	12	3.5	1.9	.65	1.7
23	6.6	71	388	467	239	275	49	12	3.5	1.8	.62	1.7
24	5.8	63	361	448	903	251	47	13	3.3	1.6	.64	1.9
25	5.0	56	276	423	966	232	44	13	3.3	1.6	.71	1.9
26	5.0	51	220	339	998	214	42	12	3.2	1.5	.90	1.8
27	4.7	46	180	295	1,070	197	39	11	3.2	1.5	.92	1.7
28	4.3	42	150	268	903	179	38	11	3.1	1.4	1.0	1.7
29	4.0	38	130	513	------	165	36	10	3.1	1.4	.97	1.7
30	4.0	35	102	618	------	190	34	7.0	3.0	1.4	.89	1.7
31	4.0	------	89	442	------	169	------	7.8	------	1.4	.83	------
TOTAL	373.0	4,480.7	8,887	38,380	21,684	10,775	2,214	554.8	152.5	64.5	26.78	34.20
MEAN	12.0	149	287	1,238	774	348	73.8	17.9	5.08	2.08	.86	1.14
MAX	114	830	2,130	5,330	1,560	756	147	32	9.1	2.9	1.3	1.9
MIN	1.0	4.0	32	46	239	165	34	7.0	3.0	1.4	.61	.75
AC-FT	740	8,890	17,630	76,130	43,010	21,370	4,390	1,100	302	128	53	68

CAL YR 1972 TOTAL 25,955.85 MEAN 70.9 MAX 2,130 MIN .24 AC-FT 51,480
WTR YR 1973 TOTAL 87,626.48 MEAN 240 MAX 5,330 MIN .61 AC-FT 173,800

PEAK DISCHARGE (BASE, 3,300 CFS)

DATE	TIME	G.H.	DISCHARGE	DATE	TIME	G.H.	DISCHARGE
12-17	0715	7.51	3,560	1-16	0615	12.90	9,860
1-9	0900	7.52	3,570	1-18	0645	9.57	5,630
1-12	0115	12.94	9,920				

11465200 DRY CREEK NEAR GEYSERVILLE, CALIF.

LOCATION.--Lat 38°41'55", long 122°57'25", in Tzabaco Grant, Sonoma County, on left bank pier of bridge 0.3 mile downstream from Pena Creek, and 3 miles west of Geyserville.

DRAINAGE AREA.--162 sq mi.

PERIOD OF RECORD.--October 1959 to current year.

GAGE.--Water-stage recorder. Datum of gage is 159.40 ft above mean sea level. Prior to Oct. 1, 1964, at datum 1.00 ft higher.

AVERAGE DISCHARGE.--14 years, 322 cfs (233,300 acre-ft per year).

EXTREMES.--Current year: Maximum discharge, 22,400 cfs Jan. 12 (gage height, 15.09 ft); no flow many days. Period of record: Maximum discharge, 32,400 cfs Jan. 31, 1963 (gage height, 17.50 ft, present datum); no flow at times.

REMARKS.--Records good except those for period of indefinite stage-discharge relation, which are fair. No regulation; small diversion above station for orchard irrigation of about 1,200 acres (revised) in summer. Records of chemical analyses, water temperatures, suspended-sediment discharge, and sediment and turbidity data for the current year are published in Part 2 of this report.

DISCHARGE, IN CUBIC FEET PER SECOND, WATER YEAR OCTOBER 1972 TO SEPTEMBER 1973

DAY	OCT	NOV	DEC	JAN	FEB	MAR	APR	MAY	JUN	JUL	AUG	SEP
1	0	8.8	65	168	994	1,380	273	69	22	7.0	.13	
2	0	9.8	63	155	895	1,160	252	68	22	6.9	.11	
3	0	20	64	144	862	1,130	234	67	22	6.9	.10	
4	0	74	90	131	2,870	1,090	221	66	21	4.4	.09	
5	0	46	73	120	2,550	950	210	65	20	3.1	.07	
6	0	36	338	113	2,240	1,260	197	62	18	2.6	.07	
7	0	230	221	106	3,240	1,040	185	59	16	2.3	.06	
8	0	160	181	544	2,100	1,020	175	56	14	1.9	.05	
9	0	100	137	4,850	1,850	865	167	54	13	1.8	.04	
10	0	200	120	2,230	2,860	777	159	53	12	1.6	.04	
11	0	330	105	7,670	2,350	701	151	49	12	1.5	.03	
12	0	140	96	12,200	1,850	608	142	47	12	1.4	.03	
13	4.5	2,400	90	4,020	1,630	526	152	45	12	1.3	.02	
14	35	1,720	83	2,230	1,740	467	140	42	12	1.2	.02	
15	330	1,350	82	2,180	1,440	417	132	41	11	1.1	.02	
16	145	1,190	403	10,700	1,180	381	126	40	11	1.0	.02	
17	58	564	3,570	4,490	988	354	123	39	11	.95	.01	
18	43	394	1,840	8,250	840	324	117	37	11	.86	.01	
19	36	334	1,650	3,710	715	640	112	35	9.6	.82	.01	
20	28	259	983	2,190	600	786	98	34	8.7	.75	0	
21	22	197	713	1,830	498	705	94	31	7.9	.64	0	
22	18	161	900	1,420	427	612	98	31	6.9	.55	0	
23	16	133	677	1,200	378	526	92	31	7.2	.47	0	
24	14	113	631	1,120	1,730	474	89	29	7.7	.42	0	
25	12	100	472	1,120	2,220	435	86	31	7.4	.36	0	
26	11	90	382	961	2,030	405	82	30	7.2	.31	0	
27	11	83	339	796	2,180	369	79	29	6.0	.27	0	
28	10	78	300	755	1,860	333	77	27	6.4	.23	0	
29	9.4	73	246	1,120	------	308	77	25	6.8	.20	0	
30	8.8	68	214	1,350	------	336	73	23	7.2	.17	0	
31	8.6	------	188	1,130	------	321	------	20	------	.15	0	------
TOTAL	820.3	10,661.6	15,316	79,003	45,117	20,700	4,213	1,335	361.0	53.15	.93	0
MEAN	26.5	355	494	2,548	1,611	668	140	43.1	12.0	1.71	.030	0
MAX	330	2,400	3,570	12,200	3,240	1,380	273	69	22	7.0	.13	0
MIN	0	8.8	63	106	378	308	73	20	6.0	.15	0	0
AC-FT	1,630	21,150	30,380	156,700	89,490	41,060	8,360	2,650	716	105	1.8	0

CAL YR 1972 TOTAL 47,648.07 MEAN 130 MAX 3,570 MIN 0 AC-FT 94,510
WTR YR 1973 TOTAL 177,580.98 MEAN 487 MAX 12,200 MIN 0 AC-FT 352,200

PEAK DISCHARGE (BASE, 8,200 CFS).--Jan. 12 (0330) 22,400 cfs (15.09 ft); Jan. 16 (0830) 20,700 cfs (14.62 ft).

NOTE.--Stage-discharge relation indefinite July 9 to Aug. 22.

11466500 LAGUNA DE SANTA ROSA NEAR GRATON, CALIF.

LOCATION.--Lat 38°27'10", long 122°50'03", in Molinos Grant, Sonoma County, on downstream side of left bank pier of highway bridge, 0.2 mile downstream from Santa Rosa Creek, and 2 miles northeast of Graton.

PERIOD OF RECORD.--February 1940 to September 1949 (contents only), October 1964 to current year in reports of Geological Survey. October 1949 to September 1964 available in files of district office.

GAGE.--Water-stage recorder. Datum of gage is at mean sea level (levels by Corps of Engineers). Prior to Dec. 31, 1958, at site 75 ft downstream at same datum.

EXTREMES.--Current year: Maximum elevation, 65.96 ft Jan. 12.
Period of record: Maximum elevation, 73.3 ft Dec. 23, 1964.

REMARKS.--The laguna is a natural water channel and overflow basin connecting Santa Rosa Creek, Mark West Creek, and other smaller creeks with Russian River. During floods directions of flow may be either to or from Russian River and the laguna acts as a natural regulator of floods on lower Russian River. Figures given herein represent elevations above 55.0 ft.

ELEVATION, IN FEET, AT 2400, WATER YEAR OCTOBER 1972 TO SEPTEMBER 1973

DAY	OCT	NOV	DEC	JAN	FEB	MAR	APR	MAY	JUN	JUL	AUG	SEP
1		--	--	--	--							
2		--	--	--	--							
3		--	--	--	--							
4		--	--	--	--							
5		--	--	--	--							
6		--	--	--	55.50							
7		--	--	--	55.90							
8		--	--	--	--							
9		--	--	58.00	55.20							
10		--	--	56.10	56.70							
11		--	--	62.90	55.70							
12		--	--	65.50	--							
13		55.40	--	60.50	--							
14		55.60	--	55.60	--							
15		55.60	--	55.00	--							
16		--	--	64.00	--							
17		--	56.80	60.20	--							
18		--	56.00	61.30	--							
19		--	55.00	57.50	--							
20		--	--	55.30	--							
21		--	--	--	--							
22		--	--	--	--							
23		--	--	--	--							
24		--	--	--	--							
25		--	--	--	--							
26		--	--	--	55.60							
27		--	--	--	55.80							
28		--	--	--	55.10							
29		--	--	--	------							
30		--	--	55.10	------							
31		------	--	--	------		------		------			------
MEAN		--	--	--	--							
MAX		--	--	--	--							
MIN		--	--	--	--							

11467000 RUSSIAN RIVER NEAR GUERNEVILLE, CALIF.

LOCATION.--Lat 38°30'03", long 122°55'59", in NW¼NE¼ sec.35, T.8 N., R.10 W., Sonoma County, on left bank 0.6 mile downstream from Hobson Creek, and 3.4 miles east of Guerneville.

DRAINAGE AREA.--1,340 sq mi.

PERIOD OF RECORD.--October 1939 to current year. Monthly discharge only for some periods, published in WSP 1315-B. Prior to October 1954, published as "at Guerneville."

GAGE.--Water-stage recorder. Datum of gage is 17.25 ft above mean sea level. Prior to Oct. 1, 1954, nonrecording gage at bridge 5.3 miles downstream at datum 8.58 ft lower. Supplementary water-stage recorder 2.1 miles downstream used during periods of low flow 1948-54.

AVERAGE DISCHARGE.--34 years, 2,306 cfs (1,671,000 acre-ft per year).

EXTREMES.--Current year: Maximum discharge, 62,800 cfs Jan. 12 (gage height, 40.56 ft); minimum daily, 117 cfs June 16.
Period of record: Maximum discharge, 93,400 cfs Dec. 23, 1964 (gage height, 49.6 ft, from floodmarks); maximum gage height, 49.7 ft Dec. 23, 1955, from floodmarks; minimum daily discharge, 52 cfs May 30, 1964.

REMARKS.--Records good. Many diversions of about 29,000 acres above station for irrigation. Flow also affected by diversion into basin (see REMARKS for East Fork Russian River stations), since November 1958 by storage in Lake Mendocino 77 miles upstream (see sta 11461800) and by diversion at Wohler pumping plant beginning in May 1959. Records of water temperatures, suspended-sediment discharge, and sediment and turbidity data for the current year are published in Part 2 of this report.

DISCHARGE, IN CUBIC FEET PER SECOND, WATER YEAR OCTOBER 1972 TO SEPTEMBER 1973

DAY	OCT	NOV	DEC	JAN	FEB	MAR	APR	MAY	JUN	JUL	AUG	SEP
1	240	303	667	1,570	5,330	8,860	2,250	523	185	189	202	186
2	248	308	644	1,450	4,390	6,860	1,950	506	185	190	208	187
3	242	331	634	1,370	3,940	6,570	1,820	516	196	202	214	191
4	326	424	736	1,280	6,930	7,860	1,780	513	205	193	215	191
5	264	468	721	1,190	16,200	6,190	1,680	520	192	190	213	192
6	230	421	1,630	1,120	12,600	7,280	1,550	502	186	178	208	191
7	250	508	1,850	1,060	21,400	7,170	1,470	485	173	170	204	190
8	260	768	1,560	1,770	14,600	6,500	1,380	464	167	170	202	186
9	283	743	1,270	16,500	10,200	5,320	1,310	442	153	177	202	183
10	313	926	1,050	21,400	18,000	4,670	1,240	430	162	205	205	177
11	367	2,150	923	23,000	17,700	4,470	1,160	513	162	203	199	186
12	464	2,120	834	59,000	12,100	3,990	1,060	610	168	205	201	244
13	528	4,360	796	46,800	12,400	3,570	1,040	574	188	208	209	244
14	548	14,300	754	23,400	11,900	3,180	1,070	538	201	215	206	221
15	744	7,480	725	15,000	11,700	2,860	983	516	155	224	197	197
16	788	9,090	954	47,200	9,850	2,620	932	382	117	233	203	199
17	580	5,010	14,200	45,900	8,170	2,450	889	313	160	237	212	225
18	460	3,270	14,100	44,600	7,070	2,290	794	263	172	230	205	224
19	403	2,570	11,900	36,500	6,330	2,480	731	237	179	221	208	206
20	370	2,220	7,690	20,400	5,750	4,860	687	220	166	214	214	206
21	349	1,810	5,430	16,100	5,150	4,560	613	230	164	199	217	213
22	337	1,510	6,030	12,700	3,880	5,000	622	239	161	192	214	199
23	328	1,300	5,730	10,400	3,050	4,000	626	218	169	185	208	212
24	322	1,130	4,390	8,420	8,120	3,540	602	128	187	180	198	200
25	313	1,010	3,760	7,280	13,200	3,190	582	209	201	169	189	194
26	308	918	3,060	5,540	11,200	2,940	554	221	201	151	197	184
27	308	851	2,640	4,540	13,000	2,730	527	226	194	142	208	162
28	305	792	2,530	3,930	12,600	2,520	516	230	192	166	210	150
29	305	741	2,220	4,820	------	2,280	542	211	186	186	203	149
30	303	697	1,930	8,280	------	2,100	523	196	186	200	195	168
31	303	------	1,740	7,000	------	2,590	------	170	------	201	191	------
TOTAL	11,389	68,529	103,098	499,520	286,760	135,500	31,483	11,345	5,313	6,025	6,357	5,857
MEAN	367	2,284	3,326	16,110	10,240	4,371	1,049	366	177	194	205	195
MAX	788	14,300	14,200	59,000	21,400	8,860	2,250	610	205	237	217	244
MIN	230	303	634	1,060	3,050	2,100	516	128	117	142	189	149
AC-FT	22,590	135,900	204,500	990,800	568,800	268,800	62,450	22,500	10,540	11,950	12,610	11,620

CAL YR 1972 TOTAL 410,223 MEAN 1,121 MAX 14,300 MIN 111 AC-FT 813,700
WTR YR 1973 TOTAL 1,171,176 MEAN 3,209 MAX 59,000 MIN 117 AC-FT 2,323,000

PEAK DISCHARGE (BASE, 23,000 CFS)

DATE	TIME	G.H.	DISCHARGE	DATE	TIME	G.H.	DISCHARGE
1-10	0015	26.93	31,700	1-18	1845	35.83	50,900
1-12	1430	40.56	62,800	2-7	1400	22.86	23,500
1-16	1800	39.44	59,700				

11467600 GARCIA RIVER NEAR POINT ARENA, CALIF.

LOCATION.--Lat 38°55'35", long 123°37'45", in SW¼SW¼ sec.3, T.12 N., R.16 W., Mendocino County, on left bank 0.9 mile downstream from North Fork, and 3.5 miles northeast of town of Point Arena.

DRAINAGE AREA.--98.5 sq mi.

PERIOD OF RECORD.--Occasional low-flow measurements, water years 1951-56, and annual maximum, water years 1952-56, August 1962 to current year.

GAGE.--Water-stage recorder. Datum of gage is 55.31 ft above mean sea level. July 17, 1951, to Jan. 31, 1956, crest-stage only, at site 15 ft upstream at different datum.

AVERAGE DISCHARGE.--11 years, 330 cfs (239,100 acre-ft per year).

EXTREMES.--Current year: Maximum discharge, 19,300 cfs Jan. 16 (gage height, 14.45 ft), from rating curve extended as explained below; minimum daily, 11 cfs Oct. 8, Sept. 4-18.
Period of record: Maximum discharge, 28,700 cfs Jan. 4, 1966 (gage height, 16.41 ft), from rating curve extended above 9,600 cfs on basis of slope-area measurement at gage height 15.11 ft; maximum gage-height, 16.48 ft Jan. 23, 1970; minimum daily discharge, 8.2 cfs Sept. 24, 1972.

REMARKS.--Records good. No regulation or diversion above station. Records of water temperatures for the current year are published in Part 2 of this report.

DISCHARGE, IN CUBIC FEET PER SECOND, WATER YEAR OCTOBER 1972 TO SEPTEMBER 1973

DAY	OCT	NOV	DEC	JAN	FEB	MAR	APR	MAY	JUN	JUL	AUG	SEP
1	13	14	47	194	490	825	370	78	40	23	15	12
2	12	15	44	178	445	688	320	76	40	23	15	12
3	12	24	60	167	410	724	270	74	38	23	15	12
4	12	97	121	156	1,980	712	240	74	37	22	15	11
5	12	68	94	145	2,700	634	220	72	37	22	15	11
6	12	42	317	138	1,640	888	205	67	36	21	15	11
7	12	145	258	133	1,260	784	190	64	35	21	14	11
8	11	136	207	187	978	748	185	64	35	21	14	11
9	12	84	165	2,330	888	652	175	61	35	21	14	11
10	13	182	139	1,620	1,380	598	165	59	34	21	14	11
11	16	399	115	4,500	1,260	562	160	59	34	20	14	11
12	38	185	102	8,070	1,100	500	155	55	33	20	14	11
13	39	410	92	3,180	954	450	150	52	33	19	14	11
14	34	679	80	1,680	1,370	405	145	52	33	19	14	11
15	49	485	75	1,610	1,200	372	140	50	33	19	14	11
16	49	565	367	10,900	970	344	135	49	33	18	13	11
17	33	293	3,420	3,970	797	328	130	50	33	18	13	11
18	25	207	1,820	4,310	664	308	123	49	32	18	13	11
19	22	200	1,770	2,580	574	352	121	47	30	18	13	13
20	20	185	1,070	1,450	515	475	116	46	30	18	13	21
21	18	151	754	1,350	470	500	114	46	30	18	13	18
22	17	124	1,110	978	425	485	112	45	29	18	13	17
23	16	104	874	784	396	435	110	45	28	18	12	25
24	16	89	760	694	622	388	107	46	28	18	12	22
25	16	78	586	658	742	340	105	47	27	18	12	19
26	16	68	470	550	962	280	103	45	27	17	12	17
27	15	62	415	490	1,030	250	99	44	25	17	12	15
28	15	60	368	425	986	230	95	44	24	17	12	15
29	15	54	312	515	------	210	83	44	23	16	12	14
30	14	50	262	652	------	200	79	42	22	16	12	14
31	14	------	219	556	------	275	------	41	------	16	12	------
TOTAL	618	5,255	16,493	55,150	27,208	14,942	4,722	1,687	954	594	415	411
MEAN	19.9	175	532	1,779	972	482	157	54.4	31.8	19.2	13.4	13.7
MAX	49	679	3,420	10,900	2,700	888	370	78	40	23	15	25
MIN	11	14	44	133	396	200	79	41	22	16	12	11
AC-FT	1,230	10,420	32,710	109,400	53,970	29,640	9,370	3,350	1,890	1,180	823	815

CAL YR 1972 TOTAL 56,942.3 MEAN 156 MAX 3,420 MIN 8.2 AC-FT 112,900
WTR YR 1973 TOTAL 128,449.0 MEAN 352 MAX 10,900 MIN 11 AC-FT 254,800

PEAK DISCHARGE (BASE, 5,000 CFS)

DATE	TIME	G.H.	DISCHARGE	DATE	TIME	G.H.	DISCHARGE
12-17	0915	9.26	5,320	1-16	0715	14.45	19,300
1-12	0330	12.06	11,900	1-18	0845	9.27	5,340

11468000 NAVARRO RIVER NEAR NAVARRO, CALIF.

LOCATION.--Lat 39°10'20", long 123°40'06", in SE¼ sec.7, T.15 N., R.16 W., Mendocino County, on right bank 2.9 miles downstream from North Fork, 5.2 miles upstream from mouth, and 6.8 miles west of Navarro.

DRAINAGE AREA.--303 sq mi.

PERIOD OF RECORD.--October 1950 to current year.

GAGE.--Water-stage recorder. Datum of gage is 4.79 ft above mean sea level. Prior to Oct. 1, 1969, at site 0.2 mile upstream at datum 1.86 ft higher.

AVERAGE DISCHARGE.--23 years, 521 cfs (377,500 acre-ft per year).

EXTREMES.--Current year: Maximum discharge, 18,700 cfs Jan. 16 (gage height, 23.28 ft); minimum daily, 6.5 cfs Aug. 31, Sept. 11.

Period of record: Maximum discharge, 64,500 cfs Dec. 22, 1955 (gage height, 40.60 ft, site and datum then in use), from rating curve extended above 19,000 cfs on basis of slope-area measurement of maximum flow; minimum daily, 3.8 cfs Aug. 15, 16, 1972.

Flood in December 1937 reached a stage of 38.2 ft, from floodmarks.

REMARKS.--Records good. No regulation or diversion above station. Records of chemical analyses and water temperatures for the current year are published in Part 2 of this report.

REVISIONS (WATER YEARS).--WSP 1445: 1954(M).

DISCHARGE, IN CUBIC FEET PER SECOND, WATER YEAR OCTOBER 1972 TO SEPTEMBER 1973

DAY	OCT	NOV	DEC	JAN	FEB	MAR	APR	MAY	JUN	JUL	AUG	SEP
1	15	11	70	316	1,160	2,220	658	118	46	22	13	7.0
2	11	11	67	287	1,010	1,730	560	113	44	23	12	7.0
3	11	17	65	267	942	1,900	500	108	46	23	12	7.0
4	11	39	80	238	3,650	2,170	451	103	44	22	11	7.0
5	9.8	67	97	215	6,070	1,730	413	103	43	20	10	7.0
6	9.8	53	320	197	3,100	2,000	374	103	41	17	10	7.5
7	9.8	83	378	184	2,380	1,680	345	99	41	16	10	7.5
8	9.8	238	327	340	1,840	1,550	321	92	41	16	12	7.5
9	9.8	128	244	4,940	1,640	1,310	297	88	40	16	12	7.0
10	9.8	165	198	3,680	2,650	1,150	282	86	38	16	11	7.0
11	17	478	168	7,360	2,410	1,130	264	84	35	15	13	6.5
12	30	292	144	14,000	2,180	957	246	78	35	15	12	7.0
13	57	220	134	6,120	1,880	834	246	78	35	15	10	7.0
14	56	1,100	118	3,050	2,000	722	249	76	34	15	10	7.5
15	64	506	111	2,170	1,860	634	228	72	34	15	9.5	7.0
16	152	893	334	11,100	1,570	556	213	66	34	14	9.5	7.0
17	84	442	4,570	6,690	1,320	521	210	59	32	14	9.0	7.0
18	59	295	2,250	7,950	1,100	472	200	59	32	14	9.0	7.0
19	44	292	2,460	4,740	930	486	193	59	31	14	8.5	8.5
20	34	319	1,270	2,940	810	1,280	180	59	31	14	8.5	16
21	29	235	842	2,490	698	1,500	175	57	30	14	8.5	17
22	30	190	1,120	1,920	594	1,560	170	55	30	13	8.5	20
23	24	158	1,140	1,520	532	1,310	163	55	30	14	8.0	23
24	22	136	1,220	1,320	1,300	1,070	155	54	29	16	8.0	29
25	21	116	945	1,440	3,080	890	153	57	29	17	8.0	29
26	20	102	732	1,190	2,670	766	145	57	27	17	7.5	25
27	19	94	645	983	2,800	650	138	52	27	15	7.5	21
28	18	84	622	864	2,880	556	133	49	26	14	7.0	17
29	17	80	488	1,080	------	490	130	49	23	14	7.0	16
30	15	75	414	1,650	------	614	123	47	22	14	7.0	15
31	13	------	360	1,390	------	814	------	47	------	14	6.5	------
TOTAL	931.8	6,919	21,933	92,631	55,056	35,252	7,915	2,282	1,030	498	295.5	364.0
MEAN	30.1	231	708	2,988	1,966	1,137	264	73.6	34.3	16.1	9.53	12.1
MAX	152	1,100	4,570	14,000	6,070	2,220	658	118	46	23	13	29
MIN	9.8	11	65	184	532	472	123	47	22	13	6.5	6.5
AC-FT	1,850	13,720	43,500	183,700	109,200	69,920	15,700	4,530	2,040	988	586	722

CAL YR 1972 TOTAL 81,382.4 MEAN 222 MAX 4,570 MIN 3.8 AC-FT 161,400
WTR YR 1973 TOTAL 225,107.3 MEAN 617 MAX 14,000 MIN 6.5 AC-FT 446,500

PEAK DISCHARGE (BASE, 7,000 CFS)

DATE	TIME	G.H.	DISCHARGE	DATE	TIME	G.H.	DISCHARGE
1-9	1515	14.60	8,300	1-18	1200	16.95	10,700
1-12	0545	22.97	18,200	2-4	2200	16.48	10,200
1-16	1100	23.28	18,700				

11468500 NOYO RIVER NEAR FORT BRAGG, CALIF.

LOCATION.--Lat 39°25'42", long 123°44'12", in NE¼ sec.15, T.18 N., R.17 W., Mendocino County, on right bank 0.7 mile downstream from South Fork, and 3.5 miles east of Fort Bragg.

DRAINAGE AREA.--106 sq mi.

PERIOD OF RECORD.--August 1951 to current year.

GAGE.--Water-stage recorder. Datum of gage is 11.73 ft above mean sea level.

AVERAGE DISCHARGE.--22 years, 217 cfs (157,200 acre-ft per year).

EXTREMES.--Current year: Maximum discharge, 5,720 cfs Jan. 12 (gage height, 16.27 ft, from peak-stage indicator); minimum daily, 4.7 cfs Oct. 30, 31.
Period of record: Maximum discharge, 24,000 cfs Dec. 22, 1964 (gage height, 26.30 ft), from rating curve extended above 7,400 cfs on basis of slope-conveyance study; minimum daily, 0.80 cfs Sept. 12, 1968.

REMARKS.--Records good except those for periods of no gage-height record, which are fair. No regulation or diversion above station. Records of water temperatures for the current year are published in Part 2 of this report.

DISCHARGE, IN CUBIC FEET PER SECOND, WATER YEAR OCTOBER 1972 TO SEPTEMBER 1973

DAY	OCT	NOV	DEC	JAN	FEB	MAR	APR	MAY	JUN	JUL	AUG	SEP
1	13	4.9	27	207	358	608	488	61	31	14	6.8	4.9
2	12	5.8	25	185	335	530	401	59	31	14	6.8	4.9
3	12	27	48	163	315	569	340	58	30	14	6.8	4.9
4	12	135	70	145	1,200	608	293	56	29	13	6.8	4.9
5	11	114	74	128	2,060	557	255	55	28	13	6.4	5.3
6	11	57	222	115	1,130	572	227	53	26	13	6.4	5.3
7	11	159	260	107	779	506	205	52	26	12	6.4	5.3
8	10	170	230	151	608	482	185	50	24	12	6.0	5.6
9	10	111	186	1,030	530	425	165	49	23	12	6.0	5.6
10	10	136	149	1,360	602	413	153	47	22	12	6.0	5.6
11	23	206	122	2,400	590	428	139	46	22	12	6.0	6.0
12	50	161	102	4,400	599	389	130	45	23	11	6.0	6.0
13	38	152	85	2,900	548	353	139	44	22	11	6.0	5.6
14	27	246	70	1,900	575	310	122	43	22	11	6.0	5.6
15	32	200	67	1,000	551	275	115	42	21	11	5.6	5.6
16	22	275	183	3,100	500	247	109	41	21	11	5.6	5.6
17	15	210	1,880	2,400	440	233	109	40	22	11	5.3	5.3
18	11	156	1,130	2,700	375	213	103	39	22	11	5.3	5.6
19	9.4	147	1,110	1,600	330	223	98	38	21	11	5.3	7.2
20	8.4	140	692	990	290	323	93	38	21	10	4.9	16
21	7.6	122	488	900	258	401	88	37	19	11	4.9	17
22	6.8	107	656	730	233	440	82	37	18	11	4.9	14
23	6.4	91	752	600	213	401	79	36	18	9.5	4.9	23
24	6.2	77	776	524	280	353	77	35	17	8.5	4.9	24
25	6.0	63	623	512	338	308	74	34	17	8.5	4.9	19
26	5.7	54	473	479	560	270	71	33	17	8.5	4.9	15
27	5.3	47	422	443	719	239	70	33	16	8.5	4.9	12
28	5.0	42	378	398	665	213	68	32	15	7.6	5.3	9.5
29	4.8	35	323	410	------	193	64	31	15	7.6	5.3	8.5
30	4.7	31	278	416	------	401	63	31	14	7.2	5.3	8.0
31	4.7	------	237	392	------	575	------	31	------	7.2	5.3	------
TOTAL	411.0	3,481.7	12,138	32,785	15,981	12,058	4,605	1,326	653	334.1	175.9	270.8
MEAN	13.3	116	392	1,058	571	389	154	42.8	21.8	10.8	5.67	9.03
MAX	50	275	1,880	4,400	2,060	608	488	61	31	14	6.8	24
MIN	4.7	4.9	25	107	213	193	63	31	14	7.2	4.9	4.9
AC-FT	815	6,910	24,080	65,030	31,700	23,920	9,130	2,630	1,300	663	349	537

CAL YR 1972 TOTAL 51,058.7 MEAN 140 MAX 2,700 MIN 3.9 AC-FT 101,300
WTR YR 1973 TOTAL 84,219.5 MEAN 231 MAX 4,400 MIN 4.7 AC-FT 167,000

PEAK DISCHARGE (BASE, 2,400 CFS)

DATE	TIME	G.H.	DISCHARGE	DATE	TIME	G.H.	DISCHARGE
12-17	1045	10.97	2,710	1-16	unknown	--	3,900
1-12	unknown	16.27	5,720	2-4	2200	11.65	3,060

NOTE.--No gage-height record Jan. 11-22, Apr. 27 to May 30.

11468600 MIDDLE FORK TENMILE RIVER NEAR FORT BRAGG, CALIF.

LOCATION.--Lat 39°34'22", long 123°41'57", in NE¼NE¼ sec.25, T.20 N., R.17 W., Mendocino County, on right bank 0.8 mile upstream from confluence with North Fork Tenmile River, and 10 miles northeast of Fort Bragg.

DRAINAGE AREA.--32.9 sq mi.

PERIOD OF RECORD.--Occasional low-flow measurements, water years 1951-56, 1961. August 1964 to September 1973 (discontinued).

GAGE.--Water-stage recorder. Datum of gage is 53.88 ft above mean sea level.

AVERAGE DISCHARGE.--9 years, 86.1 cfs (62,380 acre-ft per year).

EXTREMES.--Current year: Maximum discharge, 1,860 cfs Jan. 12 (gage height, 9.12 ft); minimum daily, 3.0 cfs Sept. 2-4.
Period of record: Maximum discharge, 5,670 cfs Dec. 21, 1964 (gage height, 15.34 ft); minimum daily, 1.3 cfs Sept. 27-30, 1970.

REMARKS.--Records good. No regulation or diversion above station. Records of water temperatures for the current year are published in Part 2 of this report.

DISCHARGE, IN CUBIC FEET PER SECOND, WATER YEAR OCTOBER 1972 TO SEPTEMBER 1973

DAY	OCT	NOV	DEC	JAN	FEB	MAR	APR	MAY	JUN	JUL	AUG	SEP
1	12	11	20	74	137	220	230	31	18	8.6	4.5	3.1
2	11	12	18	67	127	195	177	30	17	8.5	4.3	3.0
3	11	39	20	61	118	208	143	30	16	8.0	4.2	3.0
4	11	113	30	54	447	197	120	30	16	7.8	4.2	3.0
5	10	55	28	50	703	182	103	29	16	7.6	4.1	3.3
6	10	33	100	47	392	206	89	28	15	7.3	3.9	3.6
7	9.8	113	103	45	277	188	77	28	14	7.2	3.8	3.6
8	9.8	83	87	66	212	179	69	27	14	7.2	3.6	3.7
9	9.8	58	67	600	195	159	63	27	14	7.1	3.6	3.6
10	10	63	53	526	220	163	59	26	14	6.9	3.6	3.4
11	21	113	43	964	203	165	54	26	13	6.7	3.4	3.8
12	29	70	37	1,680	222	151	52	25	13	6.6	3.4	3.8
13	25	66	32	1,220	199	137	58	25	13	6.5	3.3	4.2
14	19	106	29	571	214	122	51	24	13	6.6	3.4	4.3
15	19	86	29	384	194	110	48	23	12	6.6	3.5	4.6
16	17	141	95	1,110	176	101	46	23	13	6.8	3.8	4.5
17	15	91	518	871	156	97	46	22	13	6.7	3.9	4.4
18	14	65	472	682	137	87	43	22	12	6.6	4.1	4.2
19	13	69	470	500	121	96	43	21	12	6.6	4.0	7.5
20	13	58	261	371	107	122	41	21	11	6.9	4.0	13
21	12	48	188	339	96	147	40	21	11	6.8	4.0	8.4
22	12	42	275	277	88	154	38	20	11	6.4	3.9	8.7
23	12	35	270	230	81	142	37	20	11	5.8	3.9	14
24	11	30	300	199	127	126	37	22	10	5.4	3.8	12
25	11	26	229	190	151	112	36	22	10	4.6	3.8	10
26	11	23	176	169	220	100	34	20	9.8	4.5	3.8	8.2
27	11	21	166	151	263	90	34	19	9.6	4.3	3.8	6.9
28	11	21	146	137	224	81	33	18	9.3	4.2	3.7	6.0
29	11	19	122	150	------	75	33	18	8.8	4.2	3.7	5.6
30	11	20	104	148	------	266	32	18	8.7	4.3	3.3	5.3
31	11	------	89	150	------	296	------	18	------	4.3	3.2	------
TOTAL	413.4	1,730	4,577	12,083	5,807	4,674	1,966	734	378.2	197.6	117.5	172.7
MEAN	13.3	57.7	148	390	207	151	65.5	23.7	12.6	6.37	3.79	5.76
MAX	29	141	518	1,680	703	296	230	31	18	8.6	4.5	14
MIN	9.8	11	18	45	81	75	32	18	8.7	4.2	3.2	3.0
AC-FT	820	3,430	9,080	23,970	11,520	9,270	3,900	1,460	750	392	233	343

CAL YR 1972 TOTAL 25,540.8 MEAN 69.8 MAX 1,470 MIN 2.8 AC-FT 50,660
WTR YR 1973 TOTAL 32,850.4 MEAN 90.0 MAX 1,680 MIN 3.0 AC-FT 65,160

PEAK DISCHARGE (BASE, 900 CFS)

DATE	TIME	G.H.	DISCHARGE	DATE	TIME	G.H.	DISCHARGE
12-18	1815	6.96	934	1-16	0715	8.19	1,440
1-12	1945	9.12	1,860	2-4	2130	7.25	1,050

11468990 HONEYDEW CREEK NEAR HONEYDEW, CALIF.

LOCATION.--Lat 40°13'23", long 124°06'35", in NE¼SW¼ sec.7, T.3 S., R.1 E., Humboldt County, on left bank just upstream from highway bridge, 0.1 mile downstream from small right-bank tributary, 1.4 miles upstream from mouth, and 1.6 miles south of town of Honeydew.

DRAINAGE AREA.--14.9 sq mi.

PERIOD OF RECORD.--January to September 1973.

GAGE.--Water-stage recorder. Altitude of gage is 400 ft (from topographic map).

EXTREMES.--Maximum discharge during period, 3,000 cfs Jan. 16 (gage height, unknown); minimum daily, 5.2 cfs Sept. 1.

REMARKS.--Records fair. No regulation or diversion above station. Records of suspended-sediment discharge for the current year are published in Part 2 of this report.

DISCHARGE, IN CUBIC FEET PER SECOND, WATER YEAR OCTOBER 1972 TO SEPTEMBER 1973

DAY	OCT	NOV	DEC	JAN	FEB	MAR	APR	MAY	JUN	JUL	AUG	SEP
1				110	220	317	118	26	13	7.9	5.9	5.2
2				100	185	230	105	26	12	7.7	5.8	5.3
3				90	162	264	97	25	12	7.7	5.8	5.3
4				85	986	222	91	25	12	7.5	5.9	5.3
5				80	805	188	85	24	12	7.5	5.9	5.3
6				75	380	321	78	23	12	7.5	5.9	5.3
7				70	264	234	73	22	11	7.5	5.9	5.3
8				80	208	199	68	21	11	7.1	5.9	5.3
9				400	227	167	65	21	11	7.0	6.0	5.3
10				500	299	156	61	20	11	7.0	6.2	5.3
11				1,000	252	148	58	19	11	7.0	6.0	5.3
12			a66	1,600	222	130	55	19	9.9	7.0	5.9	5.5
13	a18	a304		1,500	188	117	62	18	10	6.9	5.9	5.4
14				900	291	105	53	18	10	6.9	5.9	5.4
15				600	223	97	49	17	10	6.9	5.9	5.4
16				2,000	187	103	48	16	10	6.9	5.8	5.4
17				1,200	157	97	46	16	10	6.9	5.8	5.3
18				800	136	93	43	15	9.9	6.9	5.8	5.3
19				550	120	595	41	15	9.6	6.8	5.8	82
20				450	106	344	39	15	9.3	6.7	5.8	40
21				350	97	306	38	15	9.1	6.7	5.7	15
22				270	88	236	37	15	9.1	6.6	5.7	54
23				220	82	193	35	14	9.1	6.6	5.7	45
24				350	240	160	33	27	9.0	6.3	5.7	28
25				323	199	141	33	19	8.8	6.3	5.8	20
26				258	437	124	32	16	8.7	6.3	5.8	16
27				212	285	114	31	15	8.5	6.3	5.8	13
28				182	220	103	29	14	8.2	6.2	5.8	12
29				393	------	94	28	14	8.0	6.2	5.7	11
30				318	------	154	27	13	8.0	6.2	5.6	10
31		------		257	------	128	------	13	------	6.0	5.4	------
TOTAL				15,323	7,266	5,880	1,658	576	303.2	213.0	180.5	441.9
MEAN				494	260	190	55.3	18.6	10.1	6.87	5.82	14.7
MAX				2,000	986	595	118	27	13	7.9	6.2	82
MIN				70	82	93	27	13	8.0	6.0	5.4	5.2
AC-FT				30,390	14,410	11,660	3,290	1,140	601	422	358	877

a Result of discharge measurement.

11469000 MATTOLE RIVER NEAR PETROLIA, CALIF.

LOCATION.--Lat 40°18'42", long 124°15'48", in NW¼ sec.11, T.2 S., R.2 W., Humboldt County, on right bank 0.2 mile upstream from Clear Creek, 1.5 miles southeast of Petrolia, and 1.7 miles upstream from North Fork.

DRAINAGE AREA.--240 sq mi.

PERIOD OF RECORD.--October 1911 to December 1913, October 1950 to current year. Monthly discharge only for some periods, published in WSP 1315-B.

GAGE.--Water-stage recorder. Altitude of gage is 40 ft (from topographic map). November 1911 to December 1913, nonrecording gages at several sites upstream within 0.3 mile of present site at various datums. Dec. 11, 1950, to July 14, 1955, at site 0.3 mile upstream at datum 7.48 ft higher. July 15, 1955, to Oct. 26, 1967, at site 0.4 mile downstream at different datum.

AVERAGE DISCHARGE.--25 years, 1,363 cfs (987,500 acre-ft per year).

EXTREMES.--Current year: Maximum discharge, 34,400 cfs Dec. 17 (gage height, 17.87 ft); minimum daily, 21 cfs Sept. 10, 11.
Period of record: Maximum discharge, 90,400 cfs Dec. 22, 1955 (gage height, 29.60 ft, site and datum then in use), from rating curve extended above 24,000 cfs on basis of slope-area measurement of maximum flow; minimum observed, 20 cfs Sept. 1, 2, 15-30, Oct. 27-31, 1913, Sept. 14-18, 25, Oct. 10-16, 1970.

REMARKS.--Records good. Diversions for irrigation of about 350 acres above station. Records of chemical analyses and water temperatures for the current year are published in Part 2 of this report.

REVISIONS (WATER YEARS).--WSP 1285: 1912-13.

DISCHARGE, IN CUBIC FEET PER SECOND, WATER YEAR OCTOBER 1972 TO SEPTEMBER 1973

DAY	OCT	NOV	DEC	JAN	FEB	MAR	APR	MAY	JUN	JUL	AUG	SEP
1	72	57	355	1,220	2,310	2,970	1,490	345	155	61	34	24
2	63	75	340	1,110	1,970	2,570	1,290	335	149	61	34	23
3	55	494	574	1,040	1,670	2,730	1,150	330	143	59	32	23
4	52	1,720	1,190	957	4,180	2,560	1,050	340	143	57	32	22
5	49	778	794	866	9,260	2,060	966	330	135	55	32	22
6	46	560	1,400	778	5,360	3,230	898	317	133	54	30	22
7	44	1,150	1,350	742	3,710	2,530	826	308	128	52	30	23
8	43	818	1,100	826	2,660	2,460	778	303	123	52	31	22
9	43	1,180	900	4,840	2,280	2,090	728	294	118	52	31	23
10	50	1,630	780	5,310	3,430	2,000	700	285	113	52	32	21
11	202	1,990	710	12,900	3,030	2,030	658	281	110	49	34	21
12	365	1,200	665	17,100	2,890	1,740	623	277	108	47	32	22
13	317	1,710	600	16,300	2,440	1,570	728	269	110	46	31	22
14	184	2,720	540	7,220	2,860	1,390	651	265	110	46	31	22
15	146	1,680	536	6,280	2,440	1,250	588	257	108	46	31	22
16	143	2,260	5,120	21,700	2,110	1,200	554	253	105	46	31	26
17	167	1,340	23,800	11,100	1,870	1,200	554	249	110	46	29	34
18	146	1,230	13,100	10,100	1,610	1,090	524	241	108	46	29	34
19	123	1,420	10,600	6,890	1,370	3,290	512	233	100	46	28	140
20	105	1,330	5,540	4,920	1,230	3,350	482	225	95	46	28	651
21	95	1,070	4,970	4,190	1,100	2,960	464	225	93	46	26	290
22	86	930	11,700	3,140	1,000	2,570	446	221	90	46	26	253
23	77	794	7,930	2,510	930	2,120	434	217	83	44	26	560
24	72	686	6,960	2,640	1,630	1,830	416	257	83	43	26	380
25	68	602	4,830	2,550	2,610	1,610	404	290	79	42	29	303
26	64	542	3,420	2,360	3,760	1,400	392	221	81	40	29	209
27	61	500	2,920	2,010	3,230	1,250	375	191	68	39	29	149
28	59	452	2,370	1,730	2,560	1,140	370	181	70	39	28	125
29	57	410	1,910	3,180	------	1,030	355	174	66	37	26	103
30	54	380	1,150	3,130	------	1,460	345	167	63	36	25	86
31	52	------	1,370	2,780	------	1,730	------	161	------	35	25	------
TOTAL	3,160	31,708	119,524	162,419	75,500	62,410	19,751	8,042	3,180	1,466	917	3,677
MEAN	102	1,057	3,856	5,239	2,696	2,013	658	259	106	47.3	29.6	123
MAX	365	2,720	23,800	21,700	9,260	3,350	1,490	345	155	61	34	651
MIN	43	57	340	742	930	1,030	345	161	63	35	25	21
AC-FT	6,270	62,890	237,100	322,200	149,800	123,800	39,180	15,950	6,310	2,910	1,820	7,290

CAL YR 1972 TOTAL 499,196 MEAN 1,364 MAX 23,800 MIN 26 AC-FT 990,200
WTR YR 1973 TOTAL 491,754 MEAN 1,347 MAX 23,800 MIN 21 AC-FT 975,400

PEAK DISCHARGE (BASE, 15,000 CFS)

DATE	TIME	G.H.	DISCHARGE	DATE	TIME	G.H.	DISCHARGE
12-17	0830	17.87	34,400	1-16	0945	16.17	27,300
1-13	0330	14.67	21,900				

11470000 LAKE PILLSBURY NEAR POTTER VALLEY, CALIF.

LOCATION.--Lat 39°24'30", long 122°57'30", on line between secs.14 and 23, T.18 N., R.10 W., Lake County, Mendocino National Forest, at Scott Dam near right bank of Eel River, 0.3 mile downstream from Rice Fork, and 10.2 miles northeast of town of Potter Valley.

DRAINAGE AREA.--289 sq mi.

PERIOD OF RECORD.--October 1922 to September 1928 (daily gage heights only), October 1928 to current year. Monthend contents only for some periods, published in WSP 1315-B. Prior to October 1953, published as "at Hullville."

GAGE.--Water-stage recorder and nonrecording gage. Datum of gage is 81.7 ft below mean sea level (river-profile survey). Prior to Jan. 26, 1950, nonrecording gage at same site and datum.

EXTREMES.--Current year: Maximum contents, 81,700 acre-ft June 1 (gage height, 1,907.72 ft); minimum contents, 19,100 acre-ft Dec. 16 (gage height, 1,865.10 ft).
Period of record: Maximum contents, 95,600 acre-ft May 13, 16, 1925 (gage height, 1,910.8 ft); maximum gage height, 1,911.84 ft Dec. 22, 1964, from floodmarks; minimum contents, 10 acre-ft Dec. 9, 10, 1931 (gage height, 1,822.5 ft).

REMARKS.--Reservoir is formed by concrete overflow type dam; storage began in December 1921. Usable capacity, 86,400 acre-ft between gage heights 1,822.4 (sill of outlet gate) and 1,910.0 ft (top of spillway gates); dead storage, 397 acre-ft; spillway at gage height 1,900.0 ft. Water is released down Eel River to Van Arsdale Reservoir, from which it is diverted through tunnel to Potter Valley powerhouse; part is then used for irrigation and remainder flows into East Fork Russian River. Records given herein represent total contents.

COOPERATION.--Record of contents furnished by Pacific Gas and Electric Co. in connection with a Federal Power Commission project.

CAPACITY TABLE (GAGE HEIGHT, IN FEET, AND CONTENTS, IN ACRE-FEET)

1,822.4	397	1,840	3,990	1,865	19,100	1,890	48,400
1,824	534	1,845	6,080	1,870	23,500	1,895	56,700
1,827	864	1,850	8,690	1,875	28,700	1,900	65,800
1,830	1,310	1,855	11,800	1,880	34,500	1,905	75,800
1,835	2,410	1,860	15,200	1,885	41,100	1,910	86,800

CONTENTS, IN ACRE-FEET, AT 2400, WATER YEAR OCTOBER 1972 TO SEPTEMBER 1973

DAY	OCT	NOV	DEC	JAN	FEB	MAR	APR	MAY	JUN	JUL	AUG	SEP
1	38,548	23,542	22,350	66,666	67,150	68,282	67,053	77,997	81,683	76,213	66,530	56,076
2	37,810	23,107	22,165	66,627	67,033	67,969	67,208	78,276	81,639	75,897	66,049	55,750
3	37,341	22,675	21,991	66,627	66,995	68,086	67,402	78,511	81,595	75,624	65,666	55,357
4	36,734	22,248	21,809	66,569	69,408	67,851	67,461	78,726	81,529	75,330	65,265	55,118
5	36,121	21,818	21,636	66,530	68,853	67,656	67,558	78,855	81,441	75,058	64,865	54,643
6	35,502	21,393	21,465	66,453	68,420	67,890	67,714	78,985	81,288	74,724	64,543	54,204
7	34,891	21,035	21,294	66,318	68,578	67,734	67,812	79,114	81,179	74,453	64,091	53,568
8	34,407	20,726	21,053	66,414	68,204	67,558	67,832	79,179	81,025	74,162	63,715	53,019
9	33,969	20,411	20,753	67,793	68,381	67,422	67,851	79,243	80,894	73,871	63,434	52,441
10	33,426	20,481	20,446	67,832	69,190	67,519	67,910	79,287	80,741	73,520	63,154	51,867
11	32,721	20,682	20,176	72,943	68,794	67,441	67,969	79,330	80,567	73,231	62,819	51,330
12	32,355	20,656	20,038	72,348	68,381	67,305	67,969	79,373	80,392	72,922	62,485	50,732
13	31,931	21,664	19,730	70,219	68,028	67,169	68,381	79,481	80,218	72,615	62,208	50,171
14	31,488	23,649	19,484	68,952	67,930	67,053	69,170	79,568	80,001	72,328	61,877	49,630
15	31,106	24,248	19,307	69,777	67,676	66,975	69,878	79,632	79,806	72,021	61,547	49,061
16	30,738	24,846	19,139	73,375	67,500	66,936	70,561	79,806	79,568	71,715	61,163	48,419
17	30,362	25,139	28,717	70,803	67,364	66,878	71,269	80,088	79,330	71,411	60,871	47,890
18	29,965	25,180	35,028	71,431	67,266	66,820	71,858	80,414	79,179	71,127	60,527	47,274
19	29,537	25,241	48,575	69,587	67,169	67,208	72,348	80,676	79,006	70,803	60,183	46,739
20	29,069	25,159	52,260	68,834	67,033	67,208	72,758	80,850	78,834	70,501	59,859	46,162
21	28,628	24,977	55,784	68,341	66,975	67,344	73,128	80,982	78,662	70,199	59,518	45,606
22	28,341	24,786	59,286	67,910	66,917	67,208	73,541	81,069	78,447	69,898	59,160	45,067
23	28,056	24,605	61,455	67,617	66,859	67,131	73,996	81,135	78,190	69,627	58,805	44,466
24	27,784	24,376	63,565	67,793	69,091	67,092	74,515	81,288	77,912	69,368	58,520	43,943
25	27,513	24,109	65,093	67,695	69,507	67,072	75,016	81,398	77,677	69,031	58,202	43,524
26	27,020	23,834	66,318	67,344	69,368	67,033	75,645	81,441	77,400	68,715	57,921	42,837
27	26,397	23,571	66,956	67,227	69,031	67,014	76,234	81,463	77,230	68,400	57,798	42,270
28	25,783	23,192	66,995	67,169	68,518	66,956	76,826	81,507	76,996	68,008	57,325	41,667
29	25,241	22,787	66,917	67,598	------	66,878	77,336	81,529	76,699	67,656	57,011	41,124
30	24,726	22,526	66,820	67,500	------	67,305	77,698	81,573	76,424	67,305	56,767	40,490
31	24,099	------	66,724	67,344	------	67,227	------	81,595	------	66,917	56,352	------
MAX	38,548	25,241	66,995	73,375	69,507	68,282	77,698	81,595	81,683	76,213	66,530	56,076
MIN	24,099	20,411	19,139	66,318	66,859	66,820	67,053	77,997	76,424	66,917	56,352	40,490
(a)	1,870.59	1,868.94	1,900.50	1,900.82	1,901.42	1,900.76	1,905.88	1,907.68	1,905.28	1,900.60	1,894.83	1,884.58
(b)	-15,000	-1,570	+44,200	+620	+1,170	-1,290	+10,500	+3,900	-5,170	-9,510	-10,600	-15,900

CAL YR 1972 b +16,700
WTR YR 1973 b +1,400

a Elevation, in feet, at end of month.
b Change in contents, in acre-feet, rounded to Geological Survey standards.

11470500 EEL RIVER BELOW SCOTT DAM, NEAR POTTER VALLEY, CALIF.

LOCATION.--Lat 39°24'29", long 122°58'13", in SE¼ sec.15, T.18 N., R.10 W., Lake County, Mendocino National Forest, on left bank 0.4 mile upstream from Soda Creek, 0.7 mile downstream from Scott Dam, and 9.7 miles northeast of town of Potter Valley.

DRAINAGE AREA.--290 sq mi.

PERIOD OF RECORD.--October 1922 to current year. Monthly discharge only for some periods, published in WSP 1315-B. Prior to October 1929, published as South Eel River at Hullville, and October 1929 to September 1953 as "at Hullville."

GAGE.--Water-stage recorder. Altitude of gage is 1,740 ft (from topographic map). Prior to Dec. 15, 1930, at datum 3.00 ft higher.

AVERAGE DISCHARGE.--51 years, 545 cfs (394,900 acre-ft per year).

EXTREMES.--Current year: Maximum discharge, 11,800 cfs Jan. 16 (gage height, 14.5 ft, from reconstructed graph); minimum daily, 81 cfs Dec. 21.

Period of record: Maximum discharge, 56,300 cfs Dec. 22, 1964 (gage height, 24.24 ft, from floodmarks), from rating curve extended above 9,400 cfs on basis of computed flow over Scott Dam at gage heights 18.50 and 21.85 ft; minimum daily, 0.1 cfs Sept. 8, 1924.

REMARKS.--Flow regulated by Lake Pillsbury 0.7 mile upstream (see sta 11470000). No diversion above station. Records of water temperatures for the current year are published in Part 2 of this report.

COOPERATION.--Records collected by Pacific Gas and Electric Co., under general supervision of the Geological Survey, in connection with a Federal Power Commission project.

REVISIONS (WATER YEARS).--WSP 1315-B: 1923(M), 1938(M). WSP 1395: Drainage area. WRD Calif. 1967: 1963-64.

DISCHARGE, IN CUBIC FEET PER SECOND, WATER YEAR OCTOBER 1972 TO SEPTEMBER 1973

DAY	OCT	NOV	DEC	JAN	FEB	MAR	APR	MAY	JUN	JUL	AUG	SEP
1	329	328	312	363	1,080	2,240	967	306	182	164	200	168
2	331	325	310	326	974	1,880	710	310	188	164	199	168
3	330	324	309	313	911	1,740	622	310	186	164	216	168
4	330	322	246	299	1,480	1,730	667	313	178	163	241	167
5	329	320	233	291	3,800	1,480	698	314	180	163	240	230
6	330	319	232	272	2,580	1,530	749	316	184	163	199	289
7	331	304	231	285	2,550	1,530	794	320	183	162	141	299
8	332	302	237	331	2,420	1,360	828	326	181	167	141	302
9	333	327	249	730	1,930	1,260	833	328	180	170	157	308
10	333	326	248	1,440	3,100	1,210	841	330	178	170	170	308
11	331	326	246	5,460	3,180	1,280	854	332	176	169	170	307
12	322	325	154	8,620	2,550	1,170	876	334	175	169	170	307
13	319	312	252	6,250	2,020	1,040	609	336	173	169	170	307
14	330	293	251	3,710	1,800	946	286	342	172	169	169	305
15	329	295	249	2,740	1,570	868	274	346	171	168	169	317
16	328	263	259	9,810	1,350	817	276	285	169	168	169	330
17	327	257	302	7,180	1,210	785	276	197	167	167	169	330
18	326	298	308	7,330	1,100	739	276	175	166	167	169	329
19	32[illegible]	299	233	5,220	1,010	760	276	182	164	167	169	329
20	326	298	82	3,280	924	1,040	276	191	163	166	169	328
21	286	297	81	2,500	864	1,060	274	192	162	166	168	332
22	182	297	88	1,870	814	1,050	276	193	166	165	168	340
23	182	296	86	1,490	769	981	276	194	169	165	168	334
24	181	299	86	1,380	1,620	931	280	191	168	165	168	327
25	181	306	86	1,590	4,270	908	284	183	168	164	168	330
26	262	305	84	1,340	3,540	894	284	183	167	175	168	334
27	327	303	326	1,160	3,280	881	288	183	167	189	168	333
28	326	306	559	1,030	2,760	841	296	183	166	188	168	332
29	324	310	530	1,110	------	790	3[illegible]2	183	165	188	168	334
30	322	312	477	1,360	------	876	304	183	165	193	168	336
31	324	------	406	1,230	------	1,090	------	183	------	201	168	------
TOTAL	9,467	9,194	7,752	80,310	55,456	35,727	14,852	7,944	5,179	5,288	5,445	8,928
MEAN	305	306	250	2,591	1,981	1,152	495	256	173	171	176	298
MAX	333	328	559	9,810	4,270	2,240	967	346	188	201	241	340
MIN	181	257	81	272	769	739	274	175	162	162	141	167
AC-FT	18,780	18,240	15,380	159,300	110,000	70,860	29,460	15,760	10,270	10,490	10,800	17,710

CAL YR 1972 TOTAL 137,808 MEAN 377 MAX 3,750 MIN 27 AC-FT 273,300
WTR YR 1973 TOTAL 245,542 MEAN 673 MAX 9,810 MIN 81 AC-FT 487,000

NOTE.--Fragmentary gage-height record Jan. 16.

11471000 POTTER VALLEY POWERHOUSE TAILRACE NEAR POTTER VALLEY, CALIF.

LOCATION.--Lat 39°21'42", long 123°07'38", in SW¼NW¼ sec.6, T.17 N., R.11 W., Mendocino County, on right bank 100 ft downstream from powerhouse of Pacific Gas and Electric Co., 1.8 miles southwest of Van Arsdale Dam, and 2.9 miles northwest of town of Potter Valley.

PERIOD OF RECORD.--December 1909 to current year. Prior to October 1922, monthly discharge only, published in WSP 1315-B. Prior to October 1931, published as Snow Mountain Water and Power Co.'s tailrace near Potter Valley.

GAGE.--Water-stage recorder and Parshall flume. Altitude of gage is 1,020 ft (from topographic map). No gage prior to Dec. 1, 1922. Dec. 1, 1922, to Sept. 30, 1923, nonrecording gage and Oct. 1, 1923, to Apr. 12, 1950, water-stage recorder, at site 50 ft upstream at different datum.

AVERAGE DISCHARGE.--63 years (1910-73), 202 cfs (146,300 acre-ft per year).

EXTREMES.--1922 to current year: Maximum daily discharge, 348 cfs Apr. 24, 1953; no flow at times in several years.

REMARKS.--Water is diverted from Eel River above Van Arsdale Dam. After passing through powerhouse, part of it is used for irrigation in Potter Valley and remainder flows into East Fork Russian River. Water for irrigation diverted from tailrace is included in figures of discharge. Records of water temperatures for the current year are published in Part 2 of this report.

COOPERATION.--Records collected by Pacific Gas and Electric Co., under general supervision of the Geological Survey, in connection with a Federal Power Commission project.

REVISIONS (WATER YEARS).--WSP 1395: 1950.

DISCHARGE, IN CUBIC FEET PER SECOND, WATER YEAR OCTOBER 1972 TO SEPTEMBER 1973

DAY	OCT	NOV	DEC	JAN	FEB	MAR	APR	MAY	JUN	JUL	AUG	SEP
1	314	299	301	171	299	302	306	329	136	138	147	148
2	312	301	302	175	299	302	306	332	129	151	141	147
3	310	304	302	176	299	301	306	328	140	149	140	145
4	311	303	237	176	299	154	307	329	141	152	138	146
5	310	303	223	233	298	151	305	332	140	149	140	175
6	311	303	239	310	298	151	205	332	136	145	144	252
7	311	303	241	293	298	151	306	330	137	147	139	276
8	310	303	219	302	298	191	306	328	138	146	124	277
9	308	304	234	269	299	270	307	333	139	155	141	275
10	309	306	235	304	314	298	307	329	139	162	146	271
11	308	306	230	257	316	295	307	317	140	165	145	275
12	308	304	87	285	316	295	308	320	140	153	146	274
13	309	300	226	296	309	295	311	326	145	146	148	285
14	308	300	226	296	306	295	310	318	141	166	143	263
15	308	299	225	295	301	295	310	320	143	150	158	309
16	308	297	225	265	301	295	311	284	138	152	145	307
17	307	291	178	292	300	296	310	174	139	146	147	301
18	306	300	165	288	300	296	311	149	139	146	148	307
19	306	302	164	283	306	298	311	138	154	147	150	310
20	307	302	163	290	307	300	312	146	136	145	148	312
21	224	303	161	290	306	300	312	146	139	146	145	304
22	159	302	162	289	306	300	315	147	144	147	149	312
23	158	302	161	288	308	300	316	144	147	145	150	314
24	157	302	161	288	305	301	315	147	142	145	149	312
25	156	302	161	293	303	301	311	159	147	143	151	307
26	207	302	159	298	302	301	319	145	147	145	152	313
27	298	302	172	303	302	302	320	140	149	141	153	313
28	299	302	171	310	302	304	318	141	143	146	152	310
29	298	301	171	305	------	306	327	139	143	146	152	308
30	298	302	171	299	------	307	330	142	143	150	148	313
31	298	------	171	299	------	306	------	143	------	142	146	------
TOTAL	8,733	9,050	6,243	8,518	8,497	8,559	9,345	7,387	4,234	4,606	4,530	8,161
MEAN	282	302	201	275	303	276	312	238	141	149	146	272
MAX	314	306	302	310	316	307	330	333	154	166	158	314
MIN	156	291	87	171	298	151	305	138	129	138	124	145
AC-FT	17,320	17,950	12,380	16,900	16,850	16,980	18,540	14,650	8,400	9,140	8,990	16,190

CAL YR 1972 TOTAL 89,384 MEAN 244 MAX 328 MIN 80 AC-FT 177,300
WTR YR 1973 TOTAL 87,863 MEAN 241 MAX 333 MIN 87 AC-FT 174,300

11471500 EEL RIVER AT VAN ARSDALE DAM, NEAR POTTER VALLEY, CALIF.

LOCATION.--Lat 39°23'19", long 123°06'54", in NE¼ sec.30, T.18 N., R.11 W., Mendocino County, on left bank 1,000 ft downstream from Van Arsdale Dam, and 4.6 miles north of town of Potter Valley.

DRAINAGE AREA.--349 sq mi.

PERIOD OF RECORD.--November 1909 to September 1922 (combined monthly discharge only, of Eel River at this station and Snow Mountain Water and Power Co.'s tailrace near Potter Valley), October 1922 to current year. Monthly discharge only for some periods, published in WSP 1315-B. Prior to October 1929, published as South Eel River at Van Arsdale Dam, near Potter Valley.

GAGE.--Water-stage recorder. Altitude of gage is 1,400 ft (from topographic map). Nov. 18, 1909, to Mar. 3, 1927, recorder in reservoir 800 ft upstream from Van Arsdale Dam at different datum. Oct. 1, 1927, to Feb. 28, 1937, nonrecording gage at present site and datum.

AVERAGE DISCHARGE (combined flow of Eel River at Van Arsdale Dam and Potter Valley powerhouse tailrace).--64 years (1909-73), 636 cfs (460,800 acre-ft per year).

EXTREMES.--Current year: Maximum discharge, 17,600 cfs Jan. 16 (gage height, 19.27 ft); minimum daily, 1.4 cfs Dec. 8.
Period of record: Maximum discharge, 64,100 cfs Dec. 22, 1964 (gage height, 33.9 ft from floodmarks); no flow at times.

REMARKS.--Flow regulated by Lake Pillsbury 11 miles upstream (see sta 11470000). Water is diverted from Van Arsdale Reservoir through tunnel to Potter Valley powerhouse (see sta 11471000) after which part is used for irrigation and remainder flows into East Fork Russian River. Records given herein show only flow passing dam down Eel River. Records of chemical analyses for the current year are published in Part 2 of this report.

COOPERATION.--Records collected by Pacific Gas and Electric Co., under general supervision of the Geological Survey, in connection with a Federal Power Commission project.

REVISIONS (WATER YEARS).--WSP 1315-B: 1913, 1920-23, 1925-27. WSP 1395: 1923(M), 1938.

DISCHARGE, IN CUBIC FEET PER SECOND, WATER YEAR OCTOBER 1972 TO SEPTEMBER 1973

DAY	OCT	NOV	DEC	JAN	FEB	MAR	APR	MAY	JUN	JUL	AUG	SEP
1	2.6	3.6	2.0	257	958	2,100	704	4.3	4.2	4.5	39	3.0
2	2.3	5.6	2.1	217	817	1,770	428	3.3	5.3	4.5	40	3.3
3	3.1	6.1	10	186	737	1,650	378	4.1	6.3	4.5	51	3.3
4	2.9	61	41	156	1,490	1,790	427	6.1	6.5	4.5	82	2.8
5	2.9	26	12	97	3,640	1,560	455	4.0	6.3	4.2	83	2.5
6	2.9	5.6	2.6	4.8	2,470	1,610	469	5.1	6.0	4.0	63	2.4
7	3.1	43	2.3	7.9	2,430	1,610	513	4.9	6.0	4.0	3.2	2.3
8	2.9	6.1	1.4	52	2,120	1,440	552	5.4	5.2	3.9	3.1	2.3
9	3.5	33	5.7	781	1,890	1,220	558	6.3	3.9	3.9	3.0	2.2
10	7.3	85	5.8	1,620	2,880	1,150	573	4.9	3.9	4.1	2.9	2.2
11	18	148	4.3	6,560	2,960	1,220	593	4.9	3.9	4.2	2.8	2.1
12	19	54	76	10,900	2,410	1,080	592	4.9	3.9	4.1	2.7	2.0
13	4.5	91	19	7,240	1,950	929	449	4.9	3.9	4.0	2.5	2.0
14	11	257	17	3,730	1,710	795	41	4.8	3.9	4.0	2.5	2.1
15	18	72	19	2,710	1,530	692	23	6.4	3.9	4.0	2.5	2.0
16	14	104	404	12,800	1,280	616	20	5.1	3.9	4.0	2.6	1.6
17	9.5	4.1	1,570	8,100	1,110	573	23	5.0	4.2	4.0	2.7	1.6
18	6.7	39	970	8,010	985	505	23	9.0	4.4	4.0	2.8	1.6
19	4.3	69	720	5,300	918	553	23	9.0	4.4	4.0	2.9	1.6
20	2.9	47	196	3,060	770	924	15	13	4.1	4.0	2.9	2.4
21	72	26	109	2,360	658	968	8.1	13	4.2	4.2	2.9	2.3
22	10	14	405	1,810	602	975	4.9	13	4.2	4.4	2.9	2.4
23	4.8	6.2	280	1,430	550	895	3.6	13	4.2	4.4	2.9	2.6
24	4.0	3.0	238	1,300	1,530	826	3.3	14	4.2	4.4	2.9	6.8
25	2.9	3.2	136	1,520	4,140	784	6.3	5.0	4.2	4.4	2.9	3.1
26	10	3.4	87	1,280	3,340	746	3.3	4.9	4.2	7.8	3.1	2.7
27	5.1	3.2	180	1,050	3,080	709	3.2	4.9	4.3	19	3.0	2.5
28	3.9	2.8	511	885	2,650	650	3.3	4.9	4.4	21	3.0	2.4
29	3.0	2.3	477	955	------	573	3.5	4.8	4.4	21	3.0	2.3
30	2.7	3.4	387	1,260	------	719	4.7	4.5	4.4	26	3.0	2.3
31	2.6	------	314	1,140	------	967	------	4.4	------	39	3.0	------
TOTAL	262.4	1,227.6	7,204.2	86,778.7	51,605	32,599	6,906.2	201.8	136.8	238.0	429.8	74.7
MEAN	8.46	40.9	232	2,799	1,843	1,052	230	6.51	4.56	7.68	13.9	2.49
MAX	72	257	1,570	12,800	4,140	2,100	704	14	6.5	39	83	6.8
MIN	2.3	2.3	1.4	4.8	550	505	3.2	3.3	3.9	3.9	2.5	1.6
AC-FT	520	2,430	14,290	172,100	102,400	64,660	13,700	400	271	472	853	148

CAL YR 1972 TOTAL 71,107.1 MEAN 194 MAX 3,840 MIN 1.3 AC-FT 141,000
WTR YR 1973 TOTAL 187,664.2 MEAN 514 MAX 12,800 MIN 1.4 AC-FT 372,200

11472150 EEL RIVER NEAR DOS RIOS, CALIF.

LOCATION.--Lat 39°37'30", long 123°20'25", in SW¼SW¼ sec.32, T.21 N., R.13 W., Mendocino County, on left bank 1,100 ft upstream from Outlet Creek, and 6.3 miles south of Dos Rios.

DRAINAGE AREA.--528 sq mi.

PERIOD OF RECORD.--October 1966 to current year.

GAGE.--Water-stage recorder. Datum of gage is 1,001.28 ft above mean sea level.

AVERAGE DISCHARGE.--7 years, 1,036 cfs (750,600 acre-ft per year).

EXTREMES.--Current year: Maximum discharge, 25,900 cfs Jan. 16 (gage height, 18.95 ft); minimum daily, 2.9 cfs Aug. 16.

Period of record: Maximum discharge, 61,600 cfs Jan. 23, 1970 (gage height, 30.35 ft), from rating curve extended above 26,000 cfs; minimum daily, 1.8 cfs Oct. 7, 8, 1970.

Flood of Dec. 22, 1964, reached a stage of 45.52 ft, from information by local resident (discharge, 100,000 cfs, revised).

REMARKS.--Records good. Flow partly regulated by Lake Pillsbury 40 miles upstream (see sta 11470000) and by diversion through Potter Valley powerhouse (see sta 11471000). Records of chemical analyses, water temperatures, and suspended-sediment discharge for the current year are published in Part 2 of this report.

DISCHARGE, IN CUBIC FEET PER SECOND, WATER YEAR OCTOBER 1972 TO SEPTEMBER 1973

DAY	OCT	NOV	DEC	JAN	FEB	MAR	APR	MAY	JUN	JUL	AUG	SEP
1	14	14	65	584	2,120	3,500	1,610	115	34	11	40	5.8
2	9.7	13	63	500	1,880	2,900	1,330	106	31	11	43	5.4
3	7.5	53	76	442	1,720	2,500	954	101	30	10	45	5.1
4	6.3	282	150	396	5,450	3,200	934	98	29	10	50	4.8
5	6.3	233	146	353	7,450	2,550	921	98	29	10	85	4.8
6	5.8	99	146	265	4,640	2,880	915	95	29	9.7	83	4.8
7	5.1	719	157	205	4,040	2,690	928	92	25	9.7	71	4.5
8	5.1	447	136	327	3,640	2,440	928	87	23	9.7	23	4.2
9	5.1	221	85	3,840	3,250	2,050	915	83	22	9.7	11	4.2
10	6.1	733	107	3,810	4,580	1,940	896	80	20	8.9	7.1	4.2
11	30	1,180	99	12,000	4,530	1,980	890	78	19	8.6	5.1	4.2
12	104	382	99	21,400	4,110	1,770	884	73	19	9.2	4.2	3.9
13	112	321	162	12,900	3,340	1,560	915	69	19	9.2	3.9	4.2
14	65	1,400	107	6,750	3,230	1,380	439	67	19	9.2	3.6	4.2
15	57	566	113	5,120	2,830	1,240	265	63	19	9.7	3.1	4.2
16	63	1,170	2,520	21,000	2,400	1,130	226	61	19	9.7	2.9	3.9
17	53	489	8,220	13,500	2,070	1,080	226	58	18	9.2	3.1	3.9
18	44	278	4,070	12,800	1,820	986	209	52	18	8.6	3.4	3.9
19	37	436	3,400	9,330	1,610	1,060	187	52	18	8.6	3.4	4.8
20	32	387	2,520	5,830	1,430	1,830	175	50	17	8.6	3.1	8.1
21	27	257	1,110	4,660	1,280	2,090	162	54	16	8.6	3.1	11
22	49	201	2,600	3,500	1,170	2,080	146	54	15	8.1	3.6	10
23	40	164	2,050	2,790	1,070	1,820	137	52	15	8.6	3.9	13
24	26	136	1,850	2,600	2,290	1,630	137	52	15	9.7	4.2	12
25	21	114	1,230	3,070	5,410	1,490	134	63	15	9.7	4.5	12
26	18	102	932	2,630	5,040	1,380	131	54	14	9.2	5.8	10
27	17	94	890	2,250	4,710	1,290	128	43	1[illegible]	8.6	8.6	12
28	18	81	1,060	1,960	4,020	1,190	123	40	13	8.6	8.1	9.2
29	18	76	988	2,260	------	1,090	120	38	12	19	6.6	7.6
30	15	69	838	2,740	------	1,720	120	35	12	25	5.8	7.1
31	14	------	714	2,490	------	2,020	------	34	------	23	5.8	------
TOTAL	931.0	10,717	36,703	162,302	91,130	58,466	16,085	2,097	598	328.4	553.9	197.0
MEAN	30.0	357	1,184	5,236	3,255	1,886	536	67.6	19.9	10.6	17.9	6.57
MAX	112	1,400	8,220	21,400	7,450	3,500	1,610	115	34	25	85	13
MIN	5.1	13	63	205	1,070	986	120	34	12	8.1	2.9	3.9
AC-FT	1,850	21,260	72,800	321,900	180,800	116,000	31,900	4,160	1,190	651	1,100	391

CAL YR 1972 TOTAL 190,239.6 MEAN 520 MAX 8,220 MIN 2.7 AC-FT 377,300
WTR YR 1973 TOTAL 380,108.3 MEAN 1,041 MAX 21,400 MIN 2.9 AC-FT 753,900

11472200 OUTLET CREEK NEAR LONGVALE, CALIF.

LOCATION.--Lat 39°37'05", long 123°21'20", in NE¼ sec.1, T.20 N., R.14 W., Mendocino County, on right bank 0.2 mile downstream from Bloody Run Creek, 0.9 mile upstream from mouth, and 6.9 miles northeast of Longvale.

DRAINAGE AREA.--161 sq mi.

PERIOD OF RECORD.--October 1956 to current year.

GAGE.--Water-stage recorder. Datum of gage is 1,018.14 ft above mean sea level.

AVERAGE DISCHARGE.--17 years, 436 cfs (315,900 acre-ft per year).

EXTREMES.--Current year: Maximum discharge, 11,600 cfs Jan. 16 (gage height, 13.08 ft); minimum daily, 0.21 cfs Aug. 16-18.
Period of record: Maximum discharge, 77,900 cfs Dec. 22, 1964 (gage height, 30.6 ft, from floodmarks), from rating curve extended above 17,000 cfs on basis of slope-area measurement of maximum flow; no flow Aug. 15-17, 1959, Sept. 14, 15, 1967.

REMARKS.--Records good except those for period of no gage-height record, which are fair. No regulation or diversion above station.

REVISIONS (WATER YEARS).--WSP 1929: 1958(M), 1960.

DISCHARGE, IN CUBIC FEET PER SECOND, WATER YEAR OCTOBER 1972 TO SEPTEMBER 1973

DAY	OCT	NOV	DEC	JAN	FEB	MAR	APR	MAY	JUN	JUL	AUG	SEP
1	9.3	5.6	42	300	681	1,020	680	49	14	3.5	.86	.66
2	7.1	6.1	40	240	546	710	520	46	14	3.2	.76	.66
3	5.9	121	126	200	482	1,450	365	46	13	3.0	.86	.76
4	5.0	525	261	170	3,740	940	310	46	12	2.8	.86	.76
5	4.5	210	165	151	3,400	660	275	46	10	2.8	.76	.66
6	3.9	116	247	137	1,920	1,380	250	43	10	2.6	.76	.66
7	3.5	815	387	128	1,320	920	225	40	8.9	2.4	.66	.66
8	3.5	419	275	259	935	720	205	39	8.4	2.2	.76	.76
9	3.5	387	158	4,080	848	580	185	38	7.0	2.2	.76	.76
10	3.7	650	153	2,850	1,700	600	165	37	6.7	2.2	.76	.66
11	7.5	832	114	6,890	1,290	520	160	35	6.3	2.0	.76	.76
12	40	383	122	8,370	1,300	470	145	33	6.0	2.0	.76	.66
13	62	462	114	4,500	1,000	380	200	30	6.0	1.8	.86	.66
14	39	810	118	2,230	1,200	340	155	28	6.3	1.7	.76	.66
15	41	635	160	2,140	920	320	120	26	6.7	1.7	.57	.66
16	41	994	2,990	6,840	600	325	113	24	6.7	1.7	.21	.76
17	31	480	5,930	3,660	560	290	115	22	7.0	1.7	.21	.86
18	23	303	3,840	3,890	470	270	105	22	7.4	1.5	.21	.86
19	18	512	2,590	2,430	430	470	96	21	7.4	1.5	.57	1.1
20	14	343	1,510	1,630	380	850	90	20	6.7	1.7	.57	4.5
21	12	225	1,080	1,650	350	1,180	85	19	6.0	1.7	.57	4.0
22	11	178	2,520	1,030	320	870	80	18	5.7	1.7	.49	3.0
23	9.6	140	1,750	751	300	570	75	17	5.4	1.7	.41	5.7
24	8.6	112	1,450	929	1,550	460	72	19	5.1	1.5	.49	5.7
25	7.5	92	1,000	1,200	1,300	400	67	22	5.4	1.4	.98	4.8
26	6.8	77	650	877	1,950	355	63	25	5.1	1.4	1.8	3.0
27	6.8	68	740	655	1,100	320	58	23	4.5	1.2	1.7	2.4
28	6.4	60	700	536	820	285	57	20	4.2	1.1	1.2	2.2
29	5.9	53	580	746	------	270	54	17	4.0	1.1	.98	2.0
30	5.9	47	470	1,010	------	1,300	52	17	3.5	1.1	.76	2.0
31	5.6	------	370	982	------	920	------	16	------	1.1	.76	------
TOTAL	452.5	10,060.7	30,652	61,461	31,412	20,145	5,142	904	219.4	59.2	23.42	53.28
MEAN	14.6	335	989	1,983	1,122	650	171	29.2	7.31	1.91	.76	1.78
MAX	62	994	5,930	8,370	3,740	1,450	680	49	14	3.5	1.8	5.7
MIN	3.5	5.6	40	128	300	270	52	16	3.5	1.1	.21	.66
AC-FT	898	19,960	60,800	121,900	62,310	39,960	10,200	1,790	435	117	46	106

CAL YR 1972 TOTAL 119,999.90 MEAN 328 MAX 5,930 MIN 1.0 AC-FT 238,000
WTR YR 1973 TOTAL 160,584.50 MEAN 440 MAX 8,370 MIN .21 AC-FT 318,500

PEAK DISCHARGE (BASE, 7,000 CFS)

DATE	TIME	G.H.	DISCHARGE	DATE	TIME	G.H.	DISCHARGE
12-17	0600	11.56	9,140	1-16	0600	13.08	11,600
1-12	0245	12.42	10,500	2-4	1845	11.30	8,740

NOTE.--No gage-height record Mar. 21 to Apr. 23.

11472900 BLACK BUTTE RIVER NEAR COVELO, CALIF.

LOCATION.--Lat 39°49'15", long 123°04'50", in SE¼ sec.28, T.23 N., R.11 W., Mendocino County, on right bank 10 ft upstream from highway bridge, 0.5 mile upstream from mouth, and 9.5 miles east of Covelo.

DRAINAGE AREA.--162 sq mi.

PERIOD OF RECORD.--Occasional low-flow measurements, water years 1951-56, and annual maximum, water years 1954-57, October 1958 to current year.

GAGE.--Water-stage recorder. Datum of gage is 1,456.71 ft above mean sea level. Sept. 10, 1953, to Sept. 30, 1957, crest-stage gage only at same site at different datum. Oct. 1, 1958, to Dec. 22, 1964, water-stage recorder at site 0.1 mile upstream at same datum.

AVERAGE DISCHARGE.--15 years, 309 cfs (223,900 acre-ft per year).

EXTREMES.--Current year: Maximum discharge, 8,550 cfs Jan. 16 (gage height, 18.89 ft); minimum daily, 2.2 cfs Sept. 10.

Period of record: Maximum discharge, 29,000 cfs Dec. 22, 1964 (gage height, 26.4 ft, from floodmarks, site then in use), from rating curve extended above 13,000 cfs on basis of slope-area measurement of maximum flow; minimum (1958 to current year), 1.2 cfs Sept. 11, 1959.

Flood of Dec. 11, 1937, reached a stage of 36.2 ft, from floodmarks at crest-stage site (discharge, 26,000 cfs).

REMARKS.--Records poor. No regulation or diversion above station. Records of water temperatures and suspended-sediment discharge for the current year are published in Part 2 of this report.

REVISIONS (WATER YEARS).--WSP 1715: 1959(M).

DISCHARGE, IN CUBIC FEET PER SECOND, WATER YEAR OCTOBER 1972 TO SEPTEMBER 1973

DAY	OCT	NOV	DEC	JAN	FEB	MAR	APR	MAY	JUN	JUL	AUG	SEP
1	10	10	79	205	211	693	509	450	114	25	9.7	7.8
2	8.8	11	74	188	182	575	446	432	86	24	9.3	5.5
3	8.1	19	80	164	164	570	404	413	77	23	8.7	4.5
4	7.1	138	114	143	596	534	400	404	70	22	8.1	4.0
5	7.1	90	84	126	1,240	495	460	350	65	21	8.7	3.6
6	7.1	47	85	122	652	514	554	339	59	20	9.0	3.2
7	6.7	92	82	103	554	470	575	327	55	19	9.0	2.9
8	6.4	72	48	114	500	455	575	311	52	19	8.7	3.0
9	6.4	76	53	436	505	432	607	306	48	18	8.1	2.7
10	7.4	146	61	554	888	500	629	300	45	17	8.1	2.2
11	13	144	75	4,680	687	539	729	295	44	18	7.8	2.4
12	22	87	61	5,300	602	470	711	306	41	19	7.5	2.5
13	22	84	55	3,670	485	436	646	322	40	20	7.5	2.7
14	20	150	57	2,130	436	409	534	327	40	18	7.2	2.7
15	98	112	54	2,210	368	374	505	322	38	17	7.2	3.3
16	94	178	2,220	5,660	316	368	500	306	37	17	7.2	4.0
17	74	124	3,580	2,230	290	362	559	300	36	16	7.2	2.5
18	51	108	2,200	3,040	268	322	495	281	43	16	7.2	2.4
19	32	130	2,390	1,730	244	350	450	244	40	15	7.2	3.5
20	24	118	1,780	1,360	225	409	418	211	37	15	7.0	5.3
21	20	104	1,420	1,210	218	393	381	188	36	15	7.0	6.0
22	17	106	2,380	924	205	356	409	170	34	14	7.0	6.8
23	15	94	2,050	767	195	374	465	156	33	14	7.0	8.0
24	14	84	1,720	813	669	381	505	164	33	14	7.0	9.5
25	13	77	1,090	939	1,560	400	524	159	32	13	7.2	13
26	12	85	748	570	1,250	400	580	132	31	13	7.2	12
27	12	106	705	450	1,080	418	635	118	29	12	7.5	11
28	11	100	539	295	799	400	607	110	28	12	7.5	10
29	11	96	393	306	------	362	559	99	26	12	7.5	9.3
30	10	85	295	311	------	544	495	94	25	11	7.8	8.5
31	10	------	240	264	------	699	------	106	------	10	8.1	------
TOTAL	670.1	2,873	24,812	41,014	15,389	14,004	15,866	8,042	1,374	519	241.2	164.8
MEAN	21.6	95.8	800	1,323	550	452	529	259	45.8	16.7	7.78	5.49
MAX	98	178	3,580	5,660	1,560	699	729	450	114	25	9.7	13
MIN	6.4	10	48	103	164	322	381	94	25	10	7.0	2.2
AC-FT	1,330	5,700	49,210	81,350	30,520	27,780	31,470	15,950	2,730	1,030	478	327

CAL YR 1972 TOTAL 88,509.5 MEAN 242 MAX 3,580 MIN 3.3 AC-FT 175,600
WTR YR 1973 TOTAL 124,969.1 MEAN 342 MAX 5,660 MIN 2.2 AC-FT 247,900

PEAK DISCHARGE (BASE, 5,500 CFS).--Jan. 11 (1345) 6,720 cfs (18.01 ft); Jan. 16 (0745) 8,550 cfs (18.89 ft).

11473800 ELK CREEK NEAR HEARST, CALIF.

LOCATION.--Lat 39°38'57", long 123°07'12", in NE¼SE¼ sec.30, T.21 N., R.11 W., Mendocino County, on right bank 300 ft upstream from small left-bank tributary, and 13.5 miles northeast of Hearst. Prior to Oct. 1, 1972, at site 600 ft upstream.

DRAINAGE AREA.--84.1 sq mi.

PERIOD OF RECORD.--July 1964 to September 1973 (discontinued).

GAGE.--Water-stage recorder. Datum of gage is 1,197.2 ft above mean sea level (levels by Topographic Division). Prior to Nov. 6, 1969, at same site and datum. Nov. 6, 1969, to Sept. 30, 1972, at site 600 ft upstream at same datum.

AVERAGE DISCHARGE.--9 years, 212 cfs (153,600 acre-ft per year).

EXTREMES.--Current year: Maximum discharge, 8,700 cfs Jan. 16 (gage height, 14.37 ft), from rating curve extended above 470 cfs as explained below; minimum daily, 0.55 cfs Aug. 3-8.
Period of record: Maximum discharge, 25,000 cfs Dec. 22, 1964 (gage height, 19.8 ft, from floodmarks), from rating curve extended above 9,900 cfs on basis of slope-area measurement at gage height 19.8 ft; minimum daily, 0.10 cfs Sept. 24 to Oct. 11, 1964.

REMARKS.--Records fair except those for periods of no gage-height record, which are poor. No regulation or diversion above station. Records of water temperatures and suspended-sediment discharge for the current year are published in Part 2 of this report.

DISCHARGE, IN CUBIC FEET PER SECOND, WATER YEAR OCTOBER 1972 TO SEPTEMBER 1973

DAY	OCT	NOV	DEC	JAN	FEB	MAR	APR	MAY	JUN	JUL	AUG	SEP
1	7.2	7.8	35	146	194	670	290	151	55	7.2	.60	.75
2	5.4	7.8	34	138	170	518	254	142	47	6.7	.60	.70
3	4.8	11	35	118	166	537	234	133	42	6.2	.55	.68
4	3.8	83	60	103	1,280	494	223	130	38	5.8	.55	.66
5	3.8	46	43	90	1,100	400	230	118	36	5.4	.55	.66
6	3.3	28	47	83	1,200	422	242	113	33	5.0	.55	.66
7	2.8	139	42	69	670	355	246	110	31	4.6	.55	.65
8	2.8	71	33	124	593	315	242	101	30	4.5	.55	.65
9	2.8	55	31	1,130	621	294	246	99	28	4.4	.60	.65
10	3.8	124	30	460	600	306	250	97	27	4.3	.67	.65
11	13	194	30	2,140	494	302	258	95	25	4.2	.67	.66
12	25	83	27	2,030	405	278	254	95	24	4.1	.67	.66
13	33	116	25	1,380	586	262	250	95	22	4.0	.74	.68
14	23	465	26	820	579	238	216	95	21	3.3	.67	.70
15	38	174	26	935	488	223	206	93	20	2.6	.60	.74
16	34	377	1,020	3,600	428	213	195	89	19	2.6	.60	.81
17	25	130	2,180	1,300	385	209	213	87	19	2.0	.82	.90
18	20	98	1,060	1,890	350	192	188	83	18	1.5	1.0	1.0
19	17	109	770	1,140	315	238	171	79	17	1.2	1.3	1.4
20	14	95	392	800	298	325	154	75	16	1.2	1.2	4.0
21	13	74	296	680	278	320	145	71	15	1.2	1.0	3.2
22	11	66	860	470	258	302	145	69	14	1.2	.95	2.4
23	10	57	640	352	246	290	154	64	14	1.5	.80	6.4
24	9.6	49	580	336	1,120	282	164	67	13	1.2	.90	5.0
25	9.0	46	400	400	1,280	282	181	64	12	1.2	1.7	3.5
26	8.4	42	302	314	1,260	274	192	59	11	1.0	3.0	2.8
27	7.8	40	296	240	1,050	266	199	55	10	.90	2.3	2.4
28	7.8	39	260	206	772	246	195	52	9.2	.82	1.8	2.1
29	7.2	37	220	284	------	227	181	48	8.4	.82	1.3	2.0
30	7.2	36	190	290	------	350	164	47	7.6	.74	1.0	1.9
31	7.2	------	170	225	------	355	------	61	------	.67	.85	------
TOTAL	380.7	2,899.6	10,160	22,293	17,186	9,985	6,282	2,737	682.2	92.05	29.64	49.96
MEAN	12.3	96.7	328	719	614	322	209	88.3	22.7	2.97	.96	1.67
MAX	38	465	2,180	3,600	1,280	670	290	151	55	7.2	3.0	6.4
MIN	2.8	7.8	25	69	166	192	145	47	7.6	.67	.55	.65
AC-FT	755	5,750	20,150	44,220	34,090	19,810	12,460	5,430	1,350	183	59	99

CAL YR 1972 TOTAL 47,566.27 MEAN 130 MAX 2,180 MIN .73 AC-FT 94,350
WTR YR 1973 TOTAL 72,777.15 MEAN 199 MAX 3,600 MIN .55 AC-FT 144,400

PEAK DISCHARGE (BASE, 4,000 CFS).--Dec. 17 (0600) 4,300 cfs (12.55 ft); Jan. 16 (0600) 8,700 cfs (14.37 ft).

NOTE.--No gage-height record June 11 to July 12, Aug. 17 to Sept. 30.

11473900 MIDDLE FORK EEL RIVER NEAR DOS RIOS, CALIF.

LOCATION.--Lat 39°42'23", long 123°19'27", in NE¼SE¼ sec.5, T.21 N., R.13 W., Mendocino County, on right bank 0.6 mile upstream from Eastman Creek, 1.7 miles southeast of Dos Rios, and 1.9 miles upstream from mouth.

DRAINAGE AREA.--745 sq mi.

PERIOD OF RECORD.--October 1965 to current year.

GAGE.--Water-stage recorder. Datum of gage is 901.58 ft above mean sea level.

AVERAGE DISCHARGE.--8 years, 1,792 cfs (1,298,000 acre-ft per year).

EXTREMES.--Current year: Maximum discharge, 49,200 cfs Jan. 16 (gage height, 20.80 ft); minimum daily, 12 cfs Sept. 3-15.
Period of record: Maximum discharge, 90,500 cfs Jan. 23, 1970 (gage height, 27.15 ft); minimum daily, 5.8 cfs Sept. 14-16, 1970.

REMARKS.--Records fair. No regulation or diversion above station. Records of water temperatures and suspended-sediment discharge for the current year are published in Part 2 of this report.

REVISIONS (WATER YEARS).--WRD Calif. 1967: 1966.

DISCHARGE, IN CUBIC FEET PER SECOND, WATER YEAR OCTOBER 1972 TO SEPTEMBER 1973

DAY	OCT	NOV	DEC	JAN	FEB	MAR	APR	MAY	JUN	JUL	AUG	SEP
1	85	58	466	1,380	2,160	3,640	2,640	1,990	624	76	21	14
2	65	60	430	1,150	1,990	3,080	2,310	1,910	525	71	21	13
3	51	117	393	1,020	1,890	3,040	2,140	1,870	469	67	21	12
4	44	1,520	745	871	5,490	3,180	2,040	1,840	417	67	20	12
5	38	1,040	497	744	8,310	2,660	2,120	1,700	372	61	21	12
6	34	490	453	677	4,290	2,950	2,400	1,630	329	61	20	12
7	32	1,320	419	624	3,720	2,630	2,590	1,600	304	54	20	12
8	29	831	368	699	3,300	2,410	2,560	1,560	287	51	20	12
9	27	569	214	4,660	3,300	2,230	2,680	1,520	273	53	20	12
10	29	1,590	248	4,640	5,700	2,310	2,660	1,490	263	53	19	12
11	62	2,610	221	17,500	4,740	2,960	2,950	1,450	247	53	18	12
12	177	1,230	248	22,900	4,180	2,490	3,030	1,460	232	47	18	12
13	174	961	233	19,700	3,460	2,240	2,910	1,550	220	41	18	12
14	144	2,440	210	9,550	3,330	2,110	2,580	1,650	211	40	18	12
15	203	1,440	225	9,230	3,050	1,950	2,390	1,630	205	35	18	12
16	408	2,550	5,290	34,300	2,720	1,900	2,270	1,600	200	33	17	13
17	289	1,500	18,200	16,500	2,520	1,910	2,410	1,590	194	30	17	13
18	252	1,080	9,610	16,400	2,370	1,810	2,260	1,510	186	27	16	15
19	193	1,350	8,710	9,090	2,240	1,800	2,030	1,400	174	25	15	16
20	150	1,180	6,530	5,350	2,130	2,490	1,890	1,240	159	23	15	19
21	131	911	5,230	5,280	2,050	2,570	1,800	1,110	145	19	15	19
22	112	862	9,230	3,930	1,970	2,490	1,780	1,010	134	20	15	27
23	103	769	6,990	3,210	1,840	2,310	1,960	938	127	21	15	28
24	88	653	6,820	3,040	3,240	2,240	2,060	911	118	22	15	49
25	85	596	4,840	3,640	6,670	2,210	2,160	1,000	116	22	15	49
26	77	569	3,930	2,880	5,720	2,150	2,400	838	118	23	15	42
27	73	667	3,560	2,520	5,100	2,210	2,660	733	110	21	16	34
28	65	646	3,190	2,290	3,950	2,100	2,580	661	98	26	15	29
29	62	555	2,420	2,490	------	1,950	2,470	619	89	27	16	25
30	62	522	1,980	2,760	------	2,490	2,210	593	81	27	14	23
31	60	------	1,640	2,450	------	3,520	------	578	------	21	14	------
TOTAL	3,404	30,686	103,540	211,475	101,430	76,030	70,940	41,181	7,027	1,217	538	584
MEAN	110	1,023	3,340	6,822	3,623	2,453	2,365	1,328	234	39.3	17.4	19.5
MAX	408	2,610	18,200	34,300	8,310	3,640	3,030	1,990	624	76	21	49
MIN	27	58	210	624	1,840	1,800	1,780	578	81	19	14	12
AC-FT	6,750	60,870	205,400	419,500	201,200	150,800	140,700	81,680	13,940	2,410	1,070	1,160

CAL YR 1972 TOTAL 506,965 MEAN 1,385 MAX 18,700 MIN 12 AC-FT 1,006,000
WTR YR 1973 TOTAL 648,052 MEAN 1,775 MAX 34,300 MIN 12 AC-FT 1,285,000

PEAK DISCHARGE (BASE, 35,000 CFS).--Jan. 16 (1000) 49,200 cfs (20.80 ft).

11474500 NORTH FORK EEL RIVER NEAR MINA, CALIF.

LOCATION.--Lat 39°56'18", long 123°20'36", in SW¼ sec.8, T.24 N., R.13 W., Mendocino County, on right bank 0.2 mile upstream from county road bridge, 1.4 miles upstream from Asbill Creek, and 2 miles south of Mina.

DRAINAGE AREA.--248 sq mi.

PERIOD OF RECORD.--August 1953 to current year.

GAGE.--Water-stage recorder. Datum of gage is 1,016.8 ft above mean sea level (levels by Topographic Division). Aug. 27, 1953, to Jan. 15, 1954, water-stage recorder and Jan. 16 to June 22, 1954, nonrecording gage, at site 0.4 mile downstream at different datums. June 23, 1954, to Dec. 21, 1964, water-stage recorder and Feb. 7 to July 8, 1965, nonrecording gage at site 0.2 mile downstream at different datums. July 9, 1965, to Aug. 20, 1967, water-stage recorder at site 0.6 mile downstream at datum 15.1 ft lower.

AVERAGE DISCHARGE.--20 years, 628 cfs (455,000 acre-ft per year).

EXTREMES.--Current year: Maximum discharge, 24,000 cfs Jan. 16 (gage height, 17.03 ft), from rating curve extended above 5,500 cfs; minimum daily, 0.50 cfs Aug. 11-13, 17-21, 24.
Period of record: Maximum discharge, 133,000 cfs Dec. 22, 1964 (gage height, 33.6 ft, from floodmarks, site and datum then in use), from rating curve extended above 12,000 cfs on basis of slope-area measurement of maximum flow; minimum, 0.1 cfs Aug. 30, 31, 1959.

REMARKS.--Records good. No regulation or diversion above station. Records of water temperatures and suspended-sediment discharge for the current year are published in Part 2 of this report.

DISCHARGE, IN CUBIC FEET PER SECOND, WATER YEAR OCTOBER 1972 TO SEPTEMBER 1973

DAY	OCT	NOV	DEC	JAN	FEB	MAR	APR	MAY	JUN	JUL	AUG	SEP
1	17	18	63	367	812	1,690	882	143	49	11	2.1	1.4
2	15	19	60	328	699	1,300	734	134	47	11	2.1	.86
3	13	60	62	297	624	1,330	629	128	45	11	1.7	.86
4	11	705	185	262	3,310	1,400	562	128	41	10	1.4	1.1
5	10	275	113	219	4,960	1,070	522	128	38	10	1.4	1.1
6	9.0	123	113	211	2,250	1,280	491	119	36	9.1	1.1	1.1
7	9.0	542	117	189	1,590	1,160	450	111	33	9.1	.86	1.1
8	8.0	308	91	219	1,250	1,110	404	107	31	9.1	.86	1.1
9	9.0	183	90	2,060	1,300	888	377	102	29	8.2	.86	1.1
10	11	626	85	2,270	2,880	1,060	354	100	29	8.2	.66	1.1
11	59	1,100	80	9,870	2,180	1,240	341	98	29	7.4	.50	1.1
12	68	357	75	7,390	1,920	933	325	92	27	7.4	.50	1.1
13	45	305	70	5,970	1,410	770	360	88	26	7.4	.50	1.1
14	38	875	70	2,760	1,430	660	331	87	26	6.7	.66	1.1
15	40	424	70	2,740	1,190	579	288	81	26	6.7	.66	1.1
16	59	1,010	2,540	14,300	921	522	271	76	26	6.0	.66	1.1
17	44	424	9,680	5,220	770	530	306	74	26	6.0	.50	1.1
18	41	257	3,450	5,920	655	443	268	73	26	4.7	.50	1.1
19	34	574	2,730	3,460	566	503	248	68	26	4.7	.50	1.7
20	29	459	1,600	2,280	488	801	224	66	23	4.7	.50	6.7
21	26	287	1,080	2,100	429	973	209	66	22	4.1	.50	9.1
22	23	228	4,020	1,570	384	979	197	63	21	3.5	.66	21
23	21	178	2,760	1,160	344	939	197	59	19	3.5	.66	37
24	20	141	2,670	1,160	1,700	812	189	63	18	3.5	.50	53
25	19	117	1,490	1,650	2,700	724	187	87	18	3.5	.66	34
26	19	105	933	1,150	2,950	641	182	71	16	3.5	1.1	30
27	19	99	1,130	877	2,510	574	182	61	15	3.5	1.7	22
28	19	89	991	734	1,680	503	170	58	14	3.5	2.1	16
29	18	77	669	882	------	443	163	53	13	3.5	1.7	13
30	18	69	530	967	------	1,010	152	49	12	3.0	1.7	12
31	18	------	432	1,040	------	1,110	------	50	------	2.6	1.7	------
TOTAL	789.0	10,034	38,049	79,622	43,902	27,977	10,195	2,683	807	196.1	31.50	275.12
MEAN	25.5	334	1,227	2,568	1,568	902	340	86.5	26.9	6.33	1.02	9.17
MAX	68	1,100	9,680	14,300	4,960	1,690	882	143	49	11	2.1	53
MIN	8.0	18	60	189	344	443	152	49	12	2.6	.50	.86
AC-FT	1,560	19,900	75,470	157,900	87,080	55,490	20,220	5,320	1,600	389	62	546

CAL YR 1972 TOTAL 182,749.40 MEAN 499 MAX 9,680 MIN 1.2 AC-FT 362,500
WTR YR 1973 TOTAL 214,560.72 MEAN 588 MAX 14,300 MIN .50 AC-FT 425,600

PEAK DISCHARGE (BASE, 8,000 CFS)

DATE	TIME	G.H.	DISCHARGE	DATE	TIME	G.H.	DISCHARGE
12-17	0815	14.53	16,000	1-16	0845	17.03	24,000
1-11	1445	14.77	16,700	2-4	2200	12.52	10,900

11474700 CHAMISE CREEK NEAR ISLAND MOUNTAIN, CALIF.

LOCATION.--Lat 40°02'14", long 123°33'10", in NW¼SW¼ sec.7, T.5 S., R.6 E., Humboldt County, on right bank at downstream side of county road bridge, at Dry Creek, 3.2 miles northwest of Island Mountain, and 3.8 miles upstream from mouth.

DRAINAGE AREA.--22.6 sq mi.

PERIOD OF RECORD.--October 1972 to September 1973.

GAGE.--Water-stage recorder. Altitude of gage is 850 ft (from topographic map).

EXTREMES.--Current year: Maximum discharge, 1,810 cfs Jan. 16 (gage height, 6.98 ft), from rating curve extended above 780 cfs on basis of slope-area measurement at gage height 8.81 ft; minimum daily, 0.52 cfs Sept. 5-7.

REMARKS.--Records fair. No regulation or diversion above station. Records of water temperatures and suspended-sediment discharge for the current year are published in Part 2 of this report.

DISCHARGE, IN CUBIC FEET PER SECOND, WATER YEAR OCTOBER 1972 TO SEPTEMBER 1973

DAY	OCT	NOV	DEC	JAN	FEB	MAR	APR	MAY	JUN	JUL	AUG	SEP
1	1.2	1.5	6.2	43	67	128	64	9.7	3.7	1.5	.69	.63
2	1.1	1.6	5.9	39	61	99	57	9.1	3.4	1.5	.69	.58
3	1.1	2.4	6.3	35	57	112	50	8.8	3.4	1.4	.69	.58
4	.97	20	7.0	31	416	97	46	9.1	3.2	1.3	.69	.58
5	.97	10	6.9	27	390	83	42	9.1	3.0	1.3	.69	.52
6	.97	8.2	7.4	25	177	124	38	8.5	2.8	1.3	.63	.52
7	.97	30	7.4	24	116	97	34	8.3	2.6	1.3	.58	.52
8	.97	17	7.7	38	87	101	31	8.0	2.4	1.3	.63	.58
9	.90	27	7.2	292	81	86	28	7.7	2.4	1.1	.63	.58
10	.84	41	6.8	214	217	86	26	7.5	2.4	1.1	.63	.58
11	2.6	28	6.8	570	160	86	24	7.2	2.3	1.1	.63	.58
12	12	16	7.0	519	169	74	22	7.2	2.2	1.1	.63	.58
13	6.9	28	7.2	390	128	64	34	6.7	2.2	1.1	.63	.58
14	4.5	42	6.7	221	136	57	26	6.4	2.2	1.1	.63	.58
15	4.3	24	7.1	249	116	51	22	6.1	2.2	1.1	.63	.58
16	3.8	44	211	1,030	96	47	21	5.9	2.2	.98	.63	.58
17	2.4	18	491	426	83	46	20	5.6	2.2	.98	.63	.58
18	2.0	30	244	440	72	40	18	5.6	2.2	.90	.63	.58
19	2.1	54	166	298	63	48	17	5.2	2.1	.90	.63	.83
20	2.0	40	94	214	55	86	16	5.2	2.1	.90	.63	.83
21	1.8	27	99	186	48	108	15	5.2	1.9	.90	.63	.83
22	1.8	23	386	124	42	103	14	4.9	1.9	.90	.63	1.6
23	1.7	17	240	103	37	92	14	4.7	1.8	.90	.63	2.3
24	1.6	15	202	110	138	83	13	5.4	1.8	.90	.63	1.9
25	1.5	11	132	114	163	71	12	5.4	1.7	.90	.63	1.6
26	1.4	10	97	96	254	61	12	4.9	1.7	.90	.63	1.3
27	1.4	9.2	108	84	195	54	11	4.7	1.6	.83	.63	1.1
28	1.3	8.0	86	72	136	48	11	4.2	1.6	.76	.63	1.1
29	1.3	7.5	69	87	------	43	10	3.9	1.5	.76	.63	1.1
30	1.3	6.4	57	86	------	89	9.7	3.7	1.5	.76	.63	.98
31	1.5	------	49	78	------	71	------	3.7	------	.69	.63	------
TOTAL	69.19	616.8	2,834.6	6,265	3,760	2,435	757.7	197.6	68.2	32.46	19.78	25.78
MEAN	2.23	20.6	91.4	202	134	78.5	25.3	6.37	2.27	1.05	.64	.86
MAX	12	54	491	1,030	416	128	64	9.7	3.7	1.5	.69	2.3
MIN	.84	1.5	5.9	24	37	40	9.7	3.7	1.5	.69	.58	.52
AC-FT	137	1,220	5,620	12,430	7,460	4,830	1,500	392	135	64	39	51

WTR YR 1973 TOTAL 17,082.11 MEAN 46.8 MAX 1,030 MIN .52 AC-FT 33,880

PEAK DISCHARGE (BASE, 600 CFS)

DATE	TIME	G.H.	DISCHARGE	DATE	TIME	G.H.	DISCHARGE
12-17	0615	5.99	1,060	1-16	0500	6.98	1,810
1-11	1200	5.68	861	2-4	1845	6.05	1,110

NOTE.--No gage-height record Oct. 7 to Nov. 6, Nov. 11 to Dec. 13.

11475000 EEL RIVER AT FORT SEWARD, CALIF.

LOCATION.--Lat 40°13'05", long 123°37'54", in SE¼NE¼ sec.8, T.3 S., R.5 E., Humboldt County, on right bank at downstream side of bridge, 1.0 mile southeast of Fort Seward, 1.9 miles upstream from Dobbyn Creek, and 11.8 miles northeast of Garberville.

DRAINAGE AREA.--2,107 sq mi.

PERIOD OF RECORD.--September 1955 to current year. Prior to October 1965, published as "at Alderpoint."

GAGE.--Water-stage recorder. Datum of gage is 217.26 ft above mean sea level. Prior to Dec. 22, 1964, at site 7.5 miles upstream at datum 46.55 ft higher. Feb. 2 to Sept. 30, 1965, at site 7.7 miles upstream at datum 49.42 ft higher.

AVERAGE DISCHARGE.--18 years, 4,776 cfs (3,460,000 acre-ft per year).

EXTREMES.--Current year: Maximum discharge, 94,800 cfs Jan. 16 (gage height, 33.30 ft); minimum daily, 26 cfs Sept. 13, 14, 18.
Period of record: Maximum discharge, 561,000 cfs Dec. 22, 1964 (gage height, 87.2 ft, from floodmarks, site and datum then in use), from rating curve extended above 110,000 cfs on basis of slope-area measurement at gage height 72.5 ft; minimum daily, 10 cfs Aug. 30 to Sept. 5, 1964.

REMARKS.--Records good. Flow slightly regulated by Lake Pillsbury 99 miles upstream (see sta 11470000) and by diversion through Potter Valley powerhouse (see sta 11471000). Records of chemical analyses, water temperatures, suspended-sediment discharge, and sediment and turbidity data for the current year are published in Part 2 of this report.

DISCHARGE, IN CUBIC FEET PER SECOND, WATER YEAR OCTOBER 1972 TO SEPTEMBER 1973

DAY	OCT	NOV	DEC	JAN	FEB	MAR	APR	MAY	JUN	JUL	AUG	SEP
1	283	143	754	3,290	7,740	14,000	7,880	2,600	679	133	54	35
2	203	136	688	2,880	6,740	12,100	6,490	2,360	729	126	57	34
3	151	206	674	2,640	6,130	11,000	5,490	2,270	612	121	56	32
4	124	2,360	1,190	2,360	12,800	12,700	4,940	2,210	551	117	65	32
5	116	3,580	1,510	2,060	35,500	10,400	4,810	2,150	505	111	65	29
6	114	1,760	1,260	1,850	18,900	10,800	5,000	1,940	465	106	62	28
7	108	2,590	1,400	1,620	14,600	10,800	5,180	1,880	431	100	77	28
8	95	4,430	1,400	1,640	12,700	9,580	5,090	1,840	403	97	82	28
9	90	2,260	1,170	10,700	11,300	8,260	4,990	1,770	376	93	80	28
10	92	4,150	870	18,000	17,100	7,640	4,910	1,730	353	90	65	28
11	109	7,250	800	37,600	16,700	8,990	5,040	1,710	334	88	52	28
12	176	3,960	775	64,700	15,000	7,740	5,120	1,680	318	81	46	27
13	573	2,360	800	57,900	12,500	6,740	5,220	1,730	306	80	41	26
14	555	5,870	825	29,700	11,300	5,970	4,910	1,840	286	77	39	26
15	442	4,130	810	20,800	11,100	5,340	3,820	1,900	277	76	38	27
16	526	6,550	6,820	69,600	9,040	4,920	3,520	1,850	272	75	35	27
17	724	4,570	52,900	54,400	7,830	4,920	3,500	1,810	264	71	31	27
18	538	2,640	26,500	43,900	6,960	4,510	3,570	1,750	258	68	31	26
19	442	2,880	25,500	35,200	6,240	4,600	3,170	1,630	248	65	31	32
20	353	3,610	15,800	23,300	5,600	7,570	2,850	1,480	240	63	30	47
21	288	2,370	10,500	20,200	4,760	8,890	2,640	1,300	230	62	27	51
22	253	1,830	19,000	16,100	4,760	9,070	2,520	1,200	212	59	27	70
23	225	1,580	18,500	12,700	4,420	8,050	2,600	1,110	198	58	28	95
24	220	1,300	15,700	11,100	6,220	7,140	2,830	1,050	191	58	28	124
25	200	1,100	10,700	13,400	18,100	6,530	2,940	1,090	183	58	28	136
26	180	954	7,600	11,300	19,000	6,050	3,140	1,190	176	57	29	138
27	170	913	6,680	9,170	19,400	5,680	3,410	960	168	57	30	131
28	159	1,010	7,500	7,850	15,800	5,300	3,410	846	157	56	30	114
29	157	913	5,530	7,950	------	4,820	3,230	781	147	54	32	102
30	145	829	4,590	9,760	------	6,400	2,930	729	138	52	34	92
31	143	------	3,860	8,990	------	10,500	------	698	------	51	35	------
TOTAL	7,954	78,234	252,606	612,660	338,240	247,010	125,150	49,084	9,707	2,460	1,365	1,648
MEAN	257	2,608	8,149	19,760	12,080	7,968	4,172	1,583	324	79.4	44.0	54.9
MAX	724	7,250	52,900	69,600	35,500	14,000	7,880	2,600	729	133	82	138
MIN	90	136	674	1,620	4,420	4,510	2,520	698	138	51	27	26
AC-FT	15,780	155,200	501,000	1,215M	670,900	489,900	248,200	97,360	19,250	4,880	2,710	3,270

CAL YR 1972 TOTAL 1,265,154 MEAN 3,457 MAX 52,900 MIN 26 AC-FT 2,509,000
WTR YR 1973 TOTAL 1,726,118 MEAN 4,729 MAX 69,600 MIN 26 AC-FT 3,424,000

PEAK DISCHARGE (BASE, 41,000 CFS)

DATE	TIME	G.H.	DISCHARGE	DATE	TIME	G.H.	DISCHARGE
12-17	1200	28.56	66,800	1-16	1530	33.30	94,800
1-13	0345	29.55	72,300	2-5	0330	24.69	47,500

11475100 DOBBYN CREEK NEAR FORT SEWARD, CALIF.

LOCATION.--Lat 40°14'14", long 123°38'05", in NW¼NE¼ sec.5, T.3 S., R.5 E., Humboldt County, on left bank at downstream side of county road bridge, 0.2 mile upstream from Conley Creek, 1.2 miles northeast of Fort Seward, and 1.6 miles upstream from mouth.

DRAINAGE AREA.--61.4 sq mi.

PERIOD OF RECORD.--October 1972 to September 1973.

GAGE.--Water-stage recorder. Altitude of gage is 250 ft (from topographic map).

EXTREMES.--Current year: Maximum discharge, 10,200 cfs Dec. 17 (gage height, 11.04 ft), from rating curve extended above 1,200 cfs; minimum daily, 6.6 cfs Sept. 13-18.

REMARKS.--Records poor. No regulation or diversion above station. Records of water temperatures and suspended-sediment discharge for the current year are published in Part 2 of this report.

DISCHARGE, IN CUBIC FEET PER SECOND, WATER YEAR OCTOBER 1972 TO SEPTEMBER 1973

DAY	OCT	NOV	DEC	JAN	FEB	MAR	APR	MAY	JUN	JUL	AUG	SEP
1	12	26	15	70	95	959	444	86	36	17	10	7.8
2	12	31	12	65	77	667	378	86	35	16	10	7.8
3	20	157	25	60	66	831	334	80	33	16	10	7.8
4	50	438	36	58	1,330	704	322	79	31	16	10	7.8
5	68	86	25	55	1,490	517	306	79	30	15	10	7.8
6	68	42	54	52	956	700	257	79	28	14	9.0	7.8
7	59	202	49	50	788	516	232	79	28	14	9.0	7.8
8	55	76	51	822	694	479	252	71	27	14	9.0	7.2
9	58	187	42	1,370	751	389	228	67	25	14	9.0	7.2
10	65	277	64	1,240	1,340	614	194	66	25	13	9.0	7.2
11	184	535	56	3,310	1,020	569	170	60	25	13	9.0	7.2
12	169	213	60	3,920	963	448	163	60	25	14	9.0	7.2
13	139	284	70	1,760	756	381	191	59	25	13	9.0	6.6
14	111	546	58	240	756	338	170	56	24	12	9.0	6.6
15	125	306	117	318	630	305	152	54	24	12	9.0	6.6
16	110	558	2,380	2,890	513	287	151	51	22	12	8.0	6.6
17	114	201	4,190	1,160	395	292	179	51	22	12	8.0	6.6
18	99	66	2,170	1,110	313	271	149	51	22	12	8.0	6.6
19	83	441	822	738	257	290	142	49	21	11	8.0	13
20	72	238	291	478	213	398	134	49	21	11	8.0	30
21	62	69	332	395	190	469	123	47	20	11	8.0	16
22	58	56	1,520	269	150	397	117	45	20	11	7.8	20
23	57	42	1,580	200	130	376	112	40	20	11	7.8	64
24	52	36	1,060	225	600	350	109	56	20	11	7.8	38
25	44	30	550	227	400	314	103	54	18	11	8.4	31
26	36	27	274	168	1,000	291	100	47	17	10	8.4	18
27	33	24	281	122	850	265	100	42	17	10	8.4	14
28	29	20	250	98	748	253	97	38	17	10	8.4	12
29	22	20	150	129	------	233	93	38	17	10	8.4	11
30	19	16	100	125	------	544	89	38	17	10	7.8	10
31	20	------	80	130	------	439	------	38	------	10	7.8	------
TOTAL	2,105	5,250	16,764	21,854	17,471	13,886	5,591	1,795	712	386	269.0	407.2
MEAN	67.9	175	541	705	624	448	186	57.9	23.7	12.5	8.68	13.6
MAX	184	558	4,190	3,920	1,490	959	444	86	36	17	10	64
MIN	12	16	12	50	66	233	89	38	17	10	7.8	6.6
AC-FT	4,180	10,410	33,250	43,350	34,650	27,540	11,090	3,560	1,410	766	534	808

WTR YR 1973 TOTAL 86,490.2 MEAN 237 MAX 4,190 MIN 6.6 AC-FT 171,600

PEAK DISCHARGE (BASE, 4,000 CFS)

DATE	TIME	G.H.	DISCHARGE	DATE	TIME	G.H.	DISCHARGE
12-17	0630	11.04	10,200	1-16	0615	9.90	5,600
1-12	2030	10.09	6,360	2-4	2145	9.51	4,330

11475560 ELDER CREEK NEAR BRANSCOMB, CALIF.
(Hydrologic bench-mark station)

LOCATION.--Lat 39°43'47", long 123°38'34", in NW¼NE¼ sec.29, T.22 N., R.16 W., Mendocino County, on right bank 0.2 mile upstream from mouth, and 5.3 miles north of Branscomb.
Rain gage No. 1: Lat 39°43'50", long 123°38'07", in NW¼NW¼ sec.28, T.22 N., R.16 W., altitude, 1,440 ft at site 0.5 mile east of gaging station.
Rain gage No. 2: Lat 39°42'36", long 123°37'03", in NW¼SW¼ sec.34, T.22 N., R.16 W., altitude, 2,680 ft at site 2 miles southeast of gaging station.

DRAINAGE AREA.--6.50 sq mi.

PERIOD OF RECORD.--October 1967 to current year.

GAGE.--Water-stage recorder and two recording and storage-type precipitation gages. Datum of gage is 1,391.08 ft above mean sea level.

AVERAGE DISCHARGE.--6 years, 28.7 cfs (20,790 acre-ft per year).

EXTREMES.--Current year: Maximum discharge, 457 cfs Jan. 16 (gage height, 6.39 ft); minimum daily, 0.81 cfs Sept. 5-11, 13-18.
Period of record: Maximum discharge, 1,320 cfs Dec. 3, 1970 (gage height, 8.45 ft), from rating curve extended above 560 cfs on basis of slope-area measurement at gage height 11.41 ft; minimum daily, 0.50 cfs Sept. 28-30, Oct. 4-17, 1970.
Flood of Dec. 22, 1964, reached a stage of 11.41 ft, from floodmarks (discharge, 3,660 cfs, by slope-area measurement of maximum flow).

REMARKS.--Records good. No regulation; small diversion above station for domestic use. Records of chemical analyses, water temperatures, and suspended-sediment discharge for the current year are published in Part 2 of this report.

DISCHARGE, IN CUBIC FEET PER SECOND, WATER YEAR OCTOBER 1972 TO SEPTEMBER 1973

DAY	OCT	NOV	DEC	JAN	FEB	MAR	APR	MAY	JUN	JUL	AUG	SEP
1	1.8	1.7	7.3	28	46	62	41	9.0	4.8	2.4	1.2	.92
2	1.7	2.0	7.1	26	43	55	37	9.0	4.7	2.4	1.0	.92
3	1.7	11	9.5	24	39	57	34	8.8	4.6	2.4	1.0	.92
4	1.6	34	10	22	142	55	31	8.5	4.5	2.2	1.0	.82
5	1.6	28	8.9	20	236	52	28	8.5	4.4	2.2	1.0	.81
6	1.6	13	10	19	146	55	26	8.0	4.3	2.2	1.0	.81
7	1.6	30	9.8	18	92	53	24	7.8	4.2	2.2	1.0	.81
8	1.6	12	9.2	21	68	50	22	7.8	4.1	2.2	1.0	.81
9	1.6	15	8.7	77	59	46	21	7.6	4.1	2.2	1.0	.81
10	1.6	22	8.5	115	66	44	19	7.3	4.0	2.0	1.1	.81
11	3.3	31	8.1	262	67	42	18	7.3	3.9	2.0	1.1	.81
12	5.2	18	7.8	362	77	38	17	7.1	3.8	2.0	1.0	.85
13	4.2	22	7.8	312	73	35	18	6.8	3.8	1.9	.97	.81
14	3.3	29	7.5	195	73	32	16	6.6	3.8	1.8	1.0	.81
15	3.7	26	7.6	140	66	30	15	6.6	3.8	1.8	1.0	.81
16	3.4	38	59	370	59	28	15	6.6	3.8	1.8	.93	.81
17	3.0	28	301	295	52	26	14	6.4	3.8	1.7	.92	.81
18	2.7	22	200	243	46	24	13	6.2	3.8	1.7	.92	.81
19	2.6	22	100	195	40	25	13	6.2	3.8	1.7	.92	2.5
20	2.4	19	70	137	35	26	12	6.0	3.6	1.7	.92	3.1
21	2.2	17	60	110	31	29	12	5.9	3.4	1.7	.92	2.3
22	1.8	15	170	84	28	33	12	5.8	3.3	1.7	.92	2.6
23	1.7	14	110	69	26	34	11	5.6	3.2	1.7	.92	4.4
24	1.6	12	90	62	39	34	11	5.8	3.1	1.7	.92	3.8
25	1.6	11	70	59	49	34	11	5.9	2.9	1.4	.92	3.1
26	1.6	10	60	54	68	34	10	5.6	2.6	1.4	.92	2.5
27	1.6	9.5	55	51	77	31	10	5.5	2.4	1.4	.92	2.0
28	1.6	8.8	48	46	67	29	9.8	5.4	2.4	1.4	.92	1.8
29	1.6	8.2	41	48	------	27	9.6	5.3	2.4	1.3	.92	1.6
30	1.6	7.7	35	47	------	40	9.3	5.0	2.4	1.3	.92	1.6
31	1.6	------	31	47	------	44	------	4.9	------	1.3	.92	------
TOTAL	68.7	536.9	1,627.8	3,558	1,910	1,204	539.7	208.8	109.7	56.8	30.10	46.26
MEAN	2.22	17.9	52.5	115	68.2	38.8	18.0	6.74	3.66	1.83	.97	1.54
MAX	5.2	38	301	370	236	62	41	9.0	4.8	2.4	1.2	4.4
MIN	1.6	1.7	7.1	18	26	24	9.3	4.9	2.4	1.3	.92	.81
AC-FT	136	1,060	3,230	7,060	3,790	2,390	1,070	414	218	113	60	92
(a)	.17	5.04	12.49	22.70	12.11	8.12	1.19	.55	0	0	0	5.46
(b)	3.18	14.42	15.61	25.74	--	8.99	--	--	--	--	0	4.04

CAL YR 1972 TOTAL 8,892.48 MEAN 24.3 MAX 430 MIN .80 AC-FT 17,640
WTR YR 1973 TOTAL 9,896.76 MEAN 27.1 MAX 370 MIN .81 AC-FT 19,630

PEAK DISCHARGE (BASE, 200 CFS)

DATE	TIME	G.H.	DISCHARGE	DATE	TIME	G.H.	DISCHARGE
12-17	0545	6.24	412	1-16	0915	6.39	457
12-21	unknown	--	unknown	2-4	2015	5.88	304
1-12	1800	6.29	427				

a Precipitation, in inches, at rain gage No. 1.
b Precipitation, in inches, at rain gage No. 2.

11475700 TENMILE CREEK NEAR LAYTONVILLE, CALIF.

LOCATION.--Lat 39°45'45", long 123°32'30", in NW¼ sec.16, T.22 N., R.15 W., Mendocino County, on right bank 0.1 mile downstream from Step Gulch Creek, and 6.0 miles northwest of Laytonville.

DRAINAGE AREA.--50.3 sq mi.

PERIOD OF RECORD.--October 1957 to current year.

GAGE.--Water-stage recorder. Datum of gage is 1,427.42 ft above mean sea level.

AVERAGE DISCHARGE.--16 years, 166 cfs (120,300 acre-ft per year).

EXTREMES.--Current year: Maximum discharge, 8,040 cfs Dec. 17 (gage height, 12.63 ft), from rating curve extended above 2,700 cfs on basis of slope-area measurement at gage height 14.96 ft; minimum daily, 0.97 cfs Aug. 21.

Period of record: Maximum discharge, 14,500 cfs Dec. 22, 1964 (gage height, 21.3 ft, from floodmarks), from rating curve extended above 4,300 cfs on basis of slope-area measurement at gage height 22.9 ft; no flow at times.

Flood of Dec. 22, 1955, reached a stage of 22.9 ft, from floodmarks (discharge, 16,300 cfs by slope-area measurement of maximum flow).

REVISIONS.--The figures of maximum discharge for some water years have been revised, as shown in the following table. They supersede figures published in the WRD Calif. reports indicated.

WRD Calif.	Water year	Date	Discharge (cfs)	Gage height (feet)
1966	1966	Jan. 4, 1966	12,100	a 15.26
1967	1967	Jan. 26, 1967	7,610	12.34
1968	1968	Dec. 4, 1967	5,900	11.08
1969	1969	Dec. 23, 1968	9,010	13.29
1970	1970	Jan. 26, 1970	12,300	15.34
1971	1971	Dec. 3, 1970	10,300	14.20
1972	1972	Jan. 22, 1972	6,780	11.75

a From high-water mark.

REMARKS.--Records good. No regulation or diversion above station.

REVISIONS.--Revised figures of discharge, in cubic feet per second, for the water years 1966-72, superseding those published in WRD Calif., 1966-72, are given herewith:

Date	Discharge	Date	Discharge	Date	Discharge
1966		1968-Con.		1970	
Jan. 4	7,990	Feb. 21	925	Jan. 14	2,260
5	4,390	Dec. 10	3,960	16	5,250
6	2,070	15	2,660	17	2,520
Mar. 9	1,310	23	6,680	20	2,260
10	907			21	5,170
		24	3,200		
Nov. 21	1,250	25	2,560	22	3,100
Dec. 2	2,150	26	1,120	23	7,340
4	2,690	28	1,010	24	3,550
5	1,780			26	3,320
		1969		27	2,950
		Jan. 11	3,050	Nov. 27	2,010
1967		12	6,510		
Jan. 20	2,460	13	3,410	28	3,750
21	2,610	14	902	29	1,470
26	3,180	19	2,230	Dec. 2	1,390
27	2,020			3	6,620
28	2,150	20	3,350	4	2,290
29	3,020	21	2,450	28	1,370
		22	1,000		
30	1,420	25	973	1971	
31	1,210	26	1,450	Jan. 15	4,600
Mar. 16	1,730			16	5,620
20	943	Feb. 6	913	17	2,510
Dec. 5	919	8	1,170	18	1,300
7	885	9	1,460	Mar. 12	3,230
		10	896	25	3,430
		11	1,860	26	3,100
1968		12	859		
Jan. 10	1,340			1972	
14	1,260	15	1,010	Jan. 22	2,700
15	1,140	28	1,240	23	1,980
16	880	Dec. 12	2,280	Feb. 24	1,460
29	1,080	19	1,850	25	1,310
Feb. 2	1,960	21	3,670	26	1,610
3	849	23	1,730	28	1,500

11475700 TENMILE CREEK NEAR LAYTONVILLE, CALIF.--Continued

REVISIONS.--Continued.

Month	Cfs-days	Max	Min	Mean	Ac-ft
January 1966	23,234	7,990	54	749	46,080
March	9,185	1,310	68	296	18,220
WTR YR 1966	52,538.20	7,990	0	144	104,200
November	5,005.10	1,250	.20	167	9,930
December	12,970	2,690	46	418	25,730
CAL YR 1966	60,124.20	7,990	0	165	119,300
January 1967	21,212	3,180	24	684	42,070
March	10,794	1,730	29	348	21,410
WTR YR 1967	64,988.47	3,180	0	178	128,900
December	5,769	919	38	186	11,440
CAL YR 1967	53,327.68	3,180	.34	146	105,800
January 1968	11,316	1,340	28	365	22,450
February	10,256	1,960	75	354	20,340
WTR YR 1968	36,588.49	1,960	0	100	72,570
December	30,785	6,680	34	993	61,060
CAL YR 1968	62,620.58	6,680	0	171	124,200
January 1969	32,264	6,510	110	1,041	64,000
February	18,461	1,860	178	659	36,620
WTR YR 1969	92,314.70	6,680	.12	253	183,100
December	18,591.3	3,670	4.9	600	36,880
CAL YR 1969	79,209.00	6,510	.12	217	157,100
January 1970	49,483	7,340	75	1,596	98,150
WTR YR 1970	80,974.97	7,340	0	222	160,600
November	11,279.7	3,750	1.4	376	22,370
December	23,989	6,620	155	774	47,580
CAL YR 1970	97,146.81	7,340	0	266	192,700
January 1971	20,438	5,620	91	659	40,540
March	18,037	3,430	34	582	35,780
WTR YR 1971	80,787.37	6,620	.06	221	160,200
CAL YR 1971	53,128.33	5,620	.52	146	105,400
January 1972	9,287	2,700	30	300	18,420
February	12,222	1,610	55	421	24,240
WTR YR 1972	42,972.87	2,700	.65	117	85,240

REVISED PEAK DISCHARGE.--1969: Dec. 10 (0815) 8,940 cfs (13.24 ft); Dec. 23 (1300) 9,010 cfs (13.29 ft); Jan. 12 (0415) 8,230 cfs (12.76 ft).
1970: Dec. 21 (0445) 8,600 cfs (13.00 ft); Jan. 16 (0415) 8,850 cfs (13.18 ft); Jan. 21 (0100) 8,220 cfs (12.75 ft); Jan. 23 (2000) 11,100 cfs (14.70 ft); Jan. 26 (2215) 12,300 cfs (15.34 ft).
1971: Dec. 3 (1745) 10,300 cfs (14.20 ft); Jan. 15 (2015) 8,890 cfs (13.21 ft); Mar. 12 (1015) 7,460 cfs (12.24 ft); Mar. 25 (2215) 9,850 cfs (13.87 ft).

11475700 TENMILE CREEK NEAR LAYTONVILLE, CALIF.--Continued

DISCHARGE, IN CUBIC FEET PER SECOND, WATER YEAR OCTOBER 1972 TO SEPTEMBER 1973

DAY	OCT	NOV	DEC	JAN	FEB	MAR	APR	MAY	JUN	JUL	AUG	SEP
1	3.6	4.3	25	210	216	437	199	24	9.8	3.7	1.6	1.9
2	3.4	5.7	24	192	185	306	147	24	9.4	3.3	1.5	1.8
3	3.1	96	98	178	168	543	127	25	8.7	3.3	1.4	1.8
4	2.9	214	108	168	2,190	401	113	26	8.5	3.1	1.4	1.9
5	2.8	48	52	158	1,010	303	102	24	8.1	2.8	1.3	1.9
6	2.8	35	104	150	529	521	92	23	7.6	2.8	1.3	2.0
7	2.7	447	102	142	391	347	81	22	7.5	2.9	1.2	2.2
8	2.5	98	73	190	320	312	73	22	7.1	2.8	1.4	2.0
9	2.8	267	62	830	322	236	68	21	6.5	2.7	1.5	1.9
10	3.6	369	58	800	650	254	63	21	6.5	2.6	1.4	1.7
11	15	422	55	2,100	457	231	57	20	6.3	2.5	1.5	1.6
12	26	98	50	2,800	502	178	54	19	6.3	2.6	1.4	1.6
13	15	323	47	2,400	356	148	103	19	6.7	2.5	1.3	1.8
14	9.6	350	44	1,200	477	131	69	18	6.5	2.3	1.3	2.1
15	12	264	42	930	343	118	56	17	6.5	2.2	1.2	2.1
16	9.6	407	2,160	2,460	274	109	52	16	6.5	2.5	1.2	2.0
17	8.1	134	3,850	1,440	223	110	52	16	6.5	2.4	1.2	2.0
18	7.3	96	1,510	1,610	185	95	47	15	6.2	2.4	1.1	2.0
19	6.0	259	828	764	155	165	45	14	5.7	2.5	1.1	4.2
20	5.2	124	460	585	134	290	42	14	5.2	2.6	1.1	12
21	4.8	89	514	669	120	431	39	14	4.9	2.7	.97	5.2
22	4.5	73	1,320	418	107	320	37	13	4.8	2.6	1.0	6.0
23	4.5	56	1,000	332	97	227	36	13	4.8	2.4	1.0	12
24	4.2	47	820	539	542	174	34	14	4.6	2.5	1.0	7.9
25	4.0	40	560	522	488	147	33	15	4.3	2.2	1.5	6.5
26	3.7	36	450	357	806	131	31	13	4.1	2.0	1.9	5.0
27	3.9	33	390	286	539	117	28	12	3.7	1.8	4.0	4.3
28	3.9	30	330	233	392	103	27	11	3.5	1.7	2.3	3.6
29	3.7	28	285	334	------	94	26	11	3.3	1.6	2.1	3.2
30	3.7	26	250	305	------	447	25	10	3.4	1.7	1.9	3.0
31	3.9	------	230	295	------	272	------	11	------	1.8	1.9	------
TOTAL	188.8	4,519.0	15,901	23,597	12,178	7,698	1,958	537	183.5	77.5	45.97	107.2
MEAN	6.09	151	513	761	435	248	65.3	17.3	6.12	2.50	1.48	3.57
MAX	26	447	3,850	2,800	2,190	543	199	26	9.8	3.7	4.0	12
MIN	2.5	4.3	24	142	97	94	25	10	3.3	1.6	.97	1.6
AC-FT	374	8,960	31,540	46,800	24,160	15,270	3,880	1,070	364	154	91	213

CAL YR 1972 TOTAL 55,824.57 MEAN 153 MAX 3,850 MIN .65 AC-FT 110,700
WTR YR 1973 TOTAL 66,990.97 MEAN 184 MAX 3,850 MIN .97 AC-FT 132,900

PEAK DISCHARGE (BASE, 5,000 CFS)

DATE	TIME	G.H.	DISCHARGE	DATE	TIME	G.H.	DISCHARGE
12-17	0600	12.63	8,040	2-4	1830	10.86	5,610
1-16	unknown	12.62	8,020				

11475800 SOUTH FORK EEL RIVER AT LEGGETT, CALIF.

LOCATION.--Lat 39°52'29", long 123°43'10", in NE¼SE¼ sec.3, T.23 N., R.17 W., Mendocino County, on right bank near Standish-Hickey State Park, 0.2 mile upstream from Rock Creek, and 0.7 mile (revised) northwest of Leggett.

DRAINAGE AREA.--248 sq mi.

PERIOD OF RECORD.--October 1965 to current year.

GAGE.--Water-stage recorder. Datum of gage is 693.32 ft above mean sea level.

AVERAGE DISCHARGE.--8 years, 925 cfs (670,200 acre-ft per year).

EXTREMES.--Current year: Maximum discharge, 20,100 cfs Jan. 12 (gage height, 15.35 ft); minimum daily, 19 cfs Oct. 31.

Period of record: Maximum discharge, 72,700 cfs Jan. 4, 1966 (gage height, 25.4 ft, from floodmarks), from rating curve extended above 21,000 cfs on basis of slope-area measurement at gage height 26.13 ft; minimum daily, 15 cfs Oct. 15, 1966, Sept. 30 to Oct. 17, 1970.

Flood of Dec. 22, 1964, reached a stage of 26.13 ft, from floodmarks (discharge, 78,700 cfs by slope-area measurement of maximum flow).

REMARKS.--Records fair. No regulation or diversion above station. Records of water temperatures for the current year are published in Part 2 of this report.

DISCHARGE, IN CUBIC FEET PER SECOND, WATER YEAR OCTOBER 1972 TO SEPTEMBER 1973

DAY	OCT	NOV	DEC	JAN	FEB	MAR	APR	MAY	JUN	JUL	AUG	SEP
1	54	20	153	1,030	1,190	2,060	1,520	278	105	45	25	29
2	46	25	143	967	1,090	1,790	1,300	270	101	45	24	28
3	42	314	188	911	1,000	2,020	1,170	262	97	45	22	25
4	39	1,310	500	843	4,960	1,970	1,080	250	95	42	24	25
5	37	694	326	788	6,880	1,690	982	247	89	42	24	25
6	35	424	534	746	3,830	1,970	898	233	85	42	24	25
7	33	1,200	580	706	2,750	1,710	815	226	83	41	23	25
8	33	916	483	839	2,240	1,620	743	219	81	41	23	25
9	35	699	389	4,340	2,000	1,440	677	209	80	41	23	25
10	50	1,100	340	4,010	2,850	1,420	625	200	76	41	23	25
11	120	1,390	304	12,100	2,470	1,450	585	194	74	40	23	24
12	192	655	282	15,100	2,630	1,330	565	182	72	39	23	24
13	186	721	268	11,400	2,300	1,240	729	173	72	37	24	24
14	106	1,210	250	5,290	2,310	1,160	510	164	74	36	24	24
15	97	743	243	3,940	2,040	1,090	442	155	74	36	24	24
16	88	1,340	2,930	13,800	1,780	1,030	428	153	74	36	24	24
17	78	793	13,400	8,970	1,560	1,010	424	150	78	36	24	25
18	61	585	6,490	7,200	1,420	928	415	143	76	36	24	26
19	50	826	4,820	4,910	1,300	964	415	140	72	36	24	40
20	43	672	3,030	3,610	1,200	1,240	402	135	69	36	23	108
21	38	545	2,410	3,380	1,120	1,420	386	135	65	36	23	87
22	33	465	7,430	2,420	1,050	1,510	374	130	63	36	25	91
23	31	386	4,900	1,980	982	1,350	366	128	55	36	25	155
24	30	330	4,080	1,930	1,530	1,230	354	138	55	33	26	140
25	26	286	2,680	2,040	2,120	1,130	342	153	55	30	28	99
26	24	247	2,080	1,640	2,630	1,070	330	140	53	31	30	76
27	23	222	2,030	1,420	2,540	982	322	128	53	29	30	63
28	22	200	1,710	1,260	2,110	916	310	123	51	29	30	54
29	21	182	1,410	1,310	------	850	300	118	49	28	33	46
30	20	167	1,250	1,350	------	1,860	286	110	47	28	31	43
31	19	------	1,130	1,350	------	1,930	------	110	------	26	30	------
TOTAL	1,712	18,667	66,763	121,580	61,882	43,390	18,095	5,396	2,173	1,135	783	1,454
MEAN	55.2	622	2,154	3,922	2,210	1,400	603	174	72.4	36.6	25.3	48.5
MAX	192	1,390	13,400	15,100	6,880	2,060	1,520	278	105	45	33	155
MIN	19	20	143	706	982	850	286	110	47	26	22	24
AC-FT	3,400	37,030	132,400	241,200	122,700	86,060	35,890	10,700	4,310	2,250	1,550	2,880

CAL YR 1972 TOTAL 294,437 MEAN 804 MAX 16,400 MIN 19 AC-FT 584,000
WTR YR 1973 TOTAL 343,030 MEAN 940 MAX 15,100 MIN 19 AC-FT 680,400

PEAK DISCHARGE (BASE, 8,500 CFS)

DATE	TIME	G.H.	DISCHARGE	DATE	TIME	G.H.	DISCHARGE
12-17	0715	15.09	19,300	1-16	0945	15.27	19,800
12-22	1330	11.21	8,630	2-4	2100	13.24	13,700
1-12	2130	15.35	20,100				

11476500 SOUTH FORK EEL RIVER NEAR MIRANDA, CALIF.

LOCATION.--Lat 40°10'55", long 123°46'30", in NW¼ sec.30, T.3 S., R.4 E., Humboldt County, on right bank at Sylvandale Campgrounds on U.S. Highway 101, 0.5 mile upstream from Rocky Glen Creek, 4.3 miles southeast of Miranda, and 20 miles upstream from mouth.

DRAINAGE AREA.--537 sq mi.

PERIOD OF RECORD.--October 1939 to current year. Monthly discharge only for some periods, published in WSP 1315-B.

GAGE.--Water-stage recorder. Datum of gage is 217.57 ft above mean sea level. Prior to Nov. 2, 1940, nonrecording gage at site 200 ft upstream at datum 0.8 ft higher. Nov. 2, 1940, to Oct. 31, 1944, nonrecording gage at present site and datum.

AVERAGE DISCHARGE.--34 years, 1,900 cfs (1,377,000 acre-ft per year).

EXTREMES.--Current year: Maximum discharge, 41,300 cfs Jan. 13 (gage height, 19.63 ft); minimum daily, 38 cfs Sept. 5.
Period of record: Maximum discharge, 199,000 cfs Dec. 22, 1964 (gage height, 46.0 ft, from floodmarks), from rating curve extended above 53,000 cfs on basis of slope-area measurement at gage height 42.7 ft; minimum observed, 9 cfs Oct. 17, 1944.

REMARKS.--Records good. Occasional storage and release for recreation use during summer months at Benbow Dam. No diversion above station. Records of chemical analyses and water temperatures for the current year are published in Part 2 of this report.

REVISIONS.--WSP 1395: Drainage area. WRD Calif. 1971: 1955.

DISCHARGE, IN CUBIC FEET PER SECOND, WATER YEAR OCTOBER 1972 TO SEPTEMBER 1973

DAY	OCT	NOV	DEC	JAN	FEB	MAR	APR	MAY	JUN	JUL	AUG	SEP
1	118	81	372	1,860	2,890	4,640	3,040	480	210	100	58	45
2	102	84	352	1,650	2,600	3,940	2,440	460	200	98	56	45
3	92	158	412	1,510	2,360	4,100	2,100	455	197	98	55	44
4	84	2,270	852	1,350	7,680	4,520	1,840	450	194	96	53	42
5	81	1,560	771	1,220	17,000	3,650	1,650	455	187	94	53	38
6	77	734	1,110	1,120	8,240	4,360	1,470	435	177	94	53	41
7	72	1,160	1,190	1,040	5,880	3,860	1,330	420	171	93	51	42
8	72	1,920	1,020	1,210	4,540	3,680	1,210	405	164	91	51	41
9	72	1,210	845	6,240	3,860	3,160	1,100	390	157	91	51	41
10	110	1,990	740	8,540	6,520	2,960	1,020	380	151	89	51	85
11	270	2,440	674	22,700	5,580	3,100	948	370	149	62	51	91
12	410	1,460	630	31,500	5,620	2,690	892	355	146	58	51	85
13	480	1,090	608	28,000	4,860	2,360	1,210	345	146	77	51	72
14	328	2,320	560	12,600	4,740	2,110	1,180	330	146	79	51	56
15	244	1,510	545	8,850	4,320	1,900	932	320	144	77	49	44
16	216	2,770	2,960	29,000	3,590	1,740	852	305	144	77	47	41
17	210	1,780	28,800	20,300	3,140	1,750	828	292	144	75	45	41
18	186	1,220	13,600	15,500	2,720	1,520	780	276	146	75	45	41
19	160	1,460	11,700	11,000	2,380	1,630	740	252	144	74	45	53
20	140	1,520	6,860	7,780	2,100	2,560	704	268	138	75	45	128
21	125	1,120	5,280	7,280	1,890	3,130	674	264	133	75	44	180
22	116	950	13,900	5,600	1,690	3,430	650	256	128	75	44	157
23	106	810	11,300	4,460	1,520	2,990	626	236	120	75	44	276
24	98	701	8,950	4,020	3,200	2,570	602	217	120	74	42	288
25	98	624	6,160	4,680	5,420	2,230	584	210	120	72	44	228
26	90	555	4,540	3,740	5,740	1,990	566	244	118	70	45	171
27	90	508	4,000	3,260	6,160	1,770	548	252	115	68	45	133
28	86	467	3,730	2,870	4,700	1,590	530	240	112	66	47	110
29	86	432	2,870	3,040	------	1,420	512	232	107	62	47	96
30	82	400	2,420	3,290	------	2,230	495	220	102	62	45	87
31	81	------	2,110	3,200	------	4,240	------	213	------	58	47	------
TOTAL	4,582	35,304	139,861	258,410	130,940	87,820	32,053	10,027	4,430	2,430	1,506	2,842
MEAN	148	1,177	4,512	8,336	4,676	2,833	1,068	323	148	78.4	48.6	94.7
MAX	480	2,770	28,800	31,500	17,000	4,640	3,040	480	210	100	58	288
MIN	72	81	352	1,040	1,520	1,420	495	210	102	58	42	38
AC-FT	9,090	70,030	277,400	512,600	259,700	174,200	63,580	19,890	8,790	4,820	2,990	5,640

CAL YR 1972 TOTAL 672,658 MEAN 1,838 MAX 44,700 MIN 44 AC-FT 1,334,000
WTR YR 1973 TOTAL 710,205 MEAN 1,946 MAX 31,500 MIN 38 AC-FT 1,409,000

PEAK DISCHARGE (BASE, 15,000 CFS)

DATE	TIME	G.H.	DISCHARGE	DATE	TIME	G.H.	DISCHARGE
12-17	1100	19.11	39,000	1-16	1415	19.26	39,700
12-22	1815	13.20	16,600	2-5	0130	16.16	26,600
1-13	0045	19.63	41,300				

11476600 BULL CREEK NEAR WEOTT, CALIF.

LOCATION.--Lat 40°21'05", long 124°00'10", in SW¼NW¼ sec.30, T.1 S., R.2 E., Humboldt County, on left bank 0.2 mile downstream from Albee Creek, 4.5 miles northwest of Weott, and 4.6 miles upstream from mouth.

DRAINAGE AREA.--28.1 sq mi.

PERIOD OF RECORD.--October 1960 to current year.

GAGE.--Water-stage recorder. Datum of gage is 269.36 ft above mean sea level. Prior to Dec. 22, 1964, water-stage recorder, and Jan. 14 to Aug. 10, 1965, nonrecording gage at site 150 ft downstream at datum 8.90 ft lower.

AVERAGE DISCHARGE.--13 years, 122 cfs (88,390 acre-ft per year).

EXTREMES.--Current year: Maximum discharge, 1,370 cfs Jan. 16 (gage height, 8.16 ft); minimum daily, 1.3 cfs Sept. 11, 12, 14, 15.
Period of record: Maximum discharge, 6,520 cfs Dec. 22, 1964 (gage height, 20.6 ft, from floodmarks, site and datum then in use), from rating curve extended above 2,100 cfs on basis of slope-area measurement of maximum flow; minimum daily, 0.82 cfs Oct. 1-6, 1970.

REMARKS.--Records good. Minor diversions above station for domestic use.

DISCHARGE, IN CUBIC FEET PER SECOND, WATER YEAR OCTOBER 1972 TO SEPTEMBER 1973

DAY	OCT	NOV	DEC	JAN	FEB	MAR	APR	MAY	JUN	JUL	AUG	SEP
1	3.5	4.2	22	93	240	331	130	29	13	6.3	2.6	1.8
2	3.3	5.6	21	83	210	288	114	28	13	6.0	2.6	2.0
3	3.1	26	33	74	180	288	106	27	13	5.6	2.2	1.9
4	3.0	33	35	66	200	262	99	28	12	5.5	2.4	1.9
5	3.0	19	31	60	940	232	93	26	12	5.3	2.5	2.0
6	3.0	23	42	55	700	293	86	25	11	5.2	2.5	2.0
7	2.8	54	41	51	470	254	80	25	11	5.0	2.2	1.8
8	2.7	32	38	59	300	234	75	24	11	4.9	2.2	1.5
9	2.7	44	35	237	230	209	70	23	10	4.8	2.6	1.5
10	2.8	50	31	198	350	204	65	23	10	4.2	2.9	1.4
11	6.4	81	29	407	330	192	62	22	10	4.1	2.4	1.3
12	25	48	29	565	300	168	59	21	10	4.0	2.2	1.3
13	13	133	28	590	274	159	64	20	11	3.8	2.1	1.4
14	8.4	137	28	439	305	141	55	19	10	3.7	2.1	1.3
15	11	105	28	543	271	126	51	19	9.8	3.6	2.1	1.3
16	15	118	294	1,140	243	124	49	18	10	3.4	2.2	1.9
17	11	87	1,100	800	214	112	48	18	10	3.2	2.0	1.8
18	8.8	77	800	560	190	104	46	18	9.5	3.1	2.1	1.5
19	7.2	86	660	440	164	276	45	17	8.8	3.1	1.9	7.5
20	6.7	74	380	400	145	299	42	17	8.5	3.2	1.9	7.2
21	5.8	67	340	300	126	296	40	17	8.3	3.1	1.9	4.0
22	5.0	62	551	260	114	274	38	16	8.0	2.9	2.0	8.3
23	4.4	54	464	270	102	243	37	16	8.0	2.8	1.9	11
24	4.4	48	412	280	265	216	35	19	8.0	2.8	2.4	8.0
25	4.4	42	297	260	407	192	33	18	7.5	2.6	2.1	6.1
26	4.2	39	230	240	460	168	33	16	7.2	2.5	2.0	4.7
27	3.9	33	217	210	394	145	31	15	7.0	2.5	2.1	3.8
28	3.9	27	175	180	349	128	31	14	6.8	2.5	2.0	3.4
29	3.9	25	140	320	------	114	30	14	6.6	2.5	1.8	2.9
30	3.5	24	122	310	------	166	29	13	6.4	2.5	1.5	2.9
31	3.3	------	106	230	------	132	------	13	------	2.5	1.6	------
TOTAL	189.1	1,657.8	6,759	9,720	8,473	6,370	1,776	618	287.4	117.2	67.0	99.4
MEAN	6.10	55.3	218	314	303	205	59.2	19.9	9.58	3.78	2.16	3.31
MAX	25	137	1,100	1,140	940	331	130	29	13	6.3	2.9	11
MIN	2.7	4.2	21	51	102	104	29	13	6.4	2.5	1.5	1.3
AC-FT	375	3,290	13,410	19,280	16,810	12,630	3,520	1,230	570	232	133	197

CAL YR 1972 TOTAL 35,363.4 MEAN 96.6 MAX 1,900 MIN 1.7 AC-FT 70,140
WTR YR 1973 TOTAL 36,133.9 MEAN 99.0 MAX 1,140 MIN 1.3 AC-FT 71,670

PEAK DISCHARGE (BASE, 1,700 CFS).--No peak above base.

11477000 EEL RIVER AT SCOTIA, CALIF.
(International Hydrological Decade River Station)

LOCATION.--Lat 40°29'30", long 124°05'55", in SW¼ sec.5, T.1 N., R.1 E., Humboldt County, near center of span in left pier of bridge on U.S. Highway 101, 0.5 mile north of Scotia, and 6 miles upstream from Van Duzen River.

DRAINAGE AREA.--3,113 sq mi.

PERIOD OF RECORD.--October 1910 to current year. Monthly discharge only for some periods and yearly estimates for 1915-16, published in WSP 1315-B.

GAGE.--Water-stage recorder. Datum of gage is 35.50 ft above mean sea level. Prior to Dec. 12, 1940, nonrecording gage at same site and datum.

AVERAGE DISCHARGE.--63 years, 7,255 cfs (5,256,000 acre-ft per year).

EXTREMES.--Current year: Maximum discharge, 152,000 cfs Jan. 16 (gage height, 33.84 ft); minimum daily, 82 cfs Sept. 7.
Period of record: Maximum discharge, 752,000 cfs Dec. 23, 1964 (gage height, 72.0 ft, from floodmarks), from rating curve extended above 220,000 cfs on basis of maximum flow at upstream stations; minimum observed, 10 cfs Aug. 12-14, 1924.

REMARKS.--Records good. Flow slightly regulated by Lake Pillsbury 138 miles upstream (see sta 11470000) and by diversion through Potter Valley powerhouse (see sta 11471000). Records of chemical analyses, water temperatures, and suspended-sediment discharge for the current year are published in Part 2 of this report.

REVISIONS (WATER YEARS).--WSP 931: 1938. WSP 1315-B: 1914-15(M), 1917(M), 1927-28(M), 1936(M), 1939(M). WSP 1345: Drainage area. WSP 1715: 1959.

DISCHARGE, IN CUBIC FEET PER SECOND, WATER YEAR OCTOBER 1972 TO SEPTEMBER 1973

DAY	OCT	NOV	DEC	JAN	FEB	MAR	APR	MAY	JUN	JUL	AUG	SEP
1	679	335	1,710	6,200	12,800	22,400	14,000	3,470	1,100	342	165	105
2	496	350	1,590	5,400	11,000	20,600	11,300	3,180	1,090	333	165	106
3	405	413	1,610	4,700	9,930	17,600	9,420	3,070	1,090	313	165	103
4	350	2,650	2,410	4,100	14,100	20,800	8,280	3,010	972	298	175	101
5	312	6,940	3,230	3,700	73,100	17,600	7,750	2,930	908	283	175	97
6	275	4,060	3,250	3,400	39,300	17,900	7,540	2,780	842	271	175	91
7	254	3,070	3,550	3,200	25,900	19,000	7,520	2,640	787	268	185	82
8	235	7,620	3,450	3,200	21,100	16,500	7,400	2,580	755	262	200	85
9	216	4,800	2,920	12,000	17,700	14,600	6,950	2,500	717	251	200	85
10	222	6,200	2,430	34,600	26,700	13,000	6,880	2,460	675	245	184	140
11	290	10,700	2,260	50,900	29,100	14,500	6,610	2,450	651	235	168	145
12	594	9,370	2,110	117,000	25,300	13,200	6,740	2,390	630	225	157	140
13	984	5,390	2,070	111,000	22,200	11,300	6,980	2,370	602	230	132	120
14	1,410	8,660	2,070	59,400	19,100	9,820	7,220	2,380	577	225	126	105
15	1,140	9,340	1,950	37,400	19,500	8,590	5,690	2,350	564	220	121	90
16	971	10,500	4,760	103,000	15,800	8,050	5,090	2,330	545	215	114	85
17	1,030	11,700	90,800	107,000	13,400	8,130	4,980	2,270	538	210	110	85
18	1,150	10,100	58,000	74,000	11,800	7,610	5,060	2,230	520	210	106	85
19	934	9,340	37,000	66,300	10,400	8,080	4,750	2,120	499	205	109	122
20	812	6,790	26,000	40,700	9,230	11,400	4,400	2,000	490	205	103	293
21	709	5,620	18,000	32,800	8,380	14,700	4,110	1,870	481	200	101	461
22	612	4,150	33,500	25,900	7,780	16,300	3,870	1,720	448	195	95	702
23	540	3,550	41,100	19,700	7,140	14,400	3,740	1,630	426	195	95	818
24	479	3,090	32,500	16,400	8,660	12,600	3,810	1,580	406	190	94	1,040
25	454	2,610	22,000	19,100	26,900	11,100	3,890	1,540	381	185	95	1,000
26	429	2,300	15,500	17,700	29,800	9,940	3,940	1,630	362	180	99	890
27	405	2,090	12,600	14,400	35,000	8,980	4,090	1,570	390	180	96	685
28	381	2,020	13,700	12,500	26,100	8,420	4,210	1,400	382	175	101	538
29	358	2,020	10,500	12,300	------	7,780	4,030	1,250	366	175	99	414
30	350	1,860	8,530	15,300	------	8,040	3,840	1,180	349	170	97	321
31	335	------	7,100	14,500	------	16,100	------	1,140	------	165	95	------
TOTAL	17,811	157,638	468,200	1,047,8M	577,220	409,040	184,090	68,020	18,543	7,056	4,102	9,134
MEAN	575	5,255	15,100	33,800	20,620	13,190	6,136	2,194	618	228	132	304
MAX	1,410	11,700	90,800	117,000	73,100	22,400	14,000	3,470	1,100	342	200	1,040
MIN	216	335	1,590	3,200	7,140	7,610	3,740	1,140	349	165	94	82
AC-FT	35,330	312,700	928,700	2,078M	1,145M	811,300	365,100	134,900	36,780	14,000	8,140	18,120

CAL YR 1972 TOTAL 2,525,569 MEAN 6,900 MAX 113,000 MIN 88 AC-FT 5,009,000
WTR YR 1973 TOTAL 2,968,654 MEAN 8,133 MAX 117,000 MIN 82 AC-FT 5,888,000

PEAK DISCHARGE (BASE, 72,000 CFS)

DATE	TIME	G.H.	DISCHARGE	DATE	TIME	G.H.	DISCHARGE
12-17	1915	30.58	122,000	1-16	2100	33.84	152,000
1-12	0815	30.69	123,000	2-5	0915	27.19	93,500

NOTE.--No gage-height record July 10 to Aug. 9.

11477500 VAN DUZEN RIVER NEAR DINSMORES, CALIF.

LOCATION.--Lat 40°29'05", long 123°39'25", in NE¼NW¼ sec.7, T.1 N., R.5 E., Humboldt County, on right bank 10 ft upstream from private road bridge, 0.3 mile upstream from South Fork, and 2.8 miles west of Dinsmores.

DRAINAGE AREA.--85.1 sq mi.

PERIOD OF RECORD.--August 1953 to September 1958, October 1963 to current year.

GAGE.--Water-stage recorder. Datum of gage is 1,996.88 ft above mean sea level. Aug. 19, 1953, to Sept. 30, 1958, at site 1.7 miles upstream at different datum.

AVERAGE DISCHARGE.--15 years, 381 cfs (276,000 acre-ft per year).

EXTREMES.--Current year: Maximum discharge, 8,030 cfs Dec. 17 (gage height, 10.65 ft, in gage well, 13.19 ft, from outside gage); minimum daily, 1.8 cfs Sept. 12-18.
Period of record: Maximum discharge, 27,000 cfs Dec. 22, 1964 (gage height, 22.5 ft, from floodmarks), from rating curve extended above 10,000 cfs on basis of slope-area measurement of maximum flow; minimum, 1.5 cfs Sept. 23-25, 1972.

REMARKS.--Records good. No regulation or diversion above station. Records of water temperatures for the current year are published in Part 2 of this report.

DISCHARGE, IN CUBIC FEET PER SECOND, WATER YEAR OCTOBER 1972 TO SEPTEMBER 1973

DAY	OCT	NOV	DEC	JAN	FEB	MAR	APR	MAY	JUN	JUL	AUG	SEP
1	17	13	72	252	397	981	507	139	42	12	3.4	2.2
2	14	20	67	224	353	683	446	132	41	12	3.1	2.0
3	12	168	89	199	333	606	381	128	38	11	3.1	2.0
4	11	512	196	170	746	575	341	130	37	10	3.1	2.0
5	9.6	239	122	149	1,830	507	333	118	35	9.2	2.9	2.0
6	8.8	128	112	138	1,130	521	337	110	33	8.8	2.9	2.0
7	8.4	216	104	122	829	498	321	104	31	8.8	2.9	2.0
8	7.7	185	86	120	655	467	294	101	30	8.4	2.9	2.0
9	8.4	255	77	294	683	421	290	99	29	7.7	2.9	2.0
10	10	446	80	585	1,460	580	294	94	29	7.7	2.9	2.0
11	51	459	73	2,560	1,130	570	302	90	27	7.3	2.9	2.0
12	55	272	79	3,110	1,020	454	294	92	26	7.3	2.9	1.8
13	60	305	72	2,730	689	393	317	90	26	7.0	2.9	1.8
14	87	596	70	1,430	633	337	276	92	26	6.4	2.9	1.8
15	68	357	75	1,540	545	298	236	92	25	6.1	2.9	1.8
16	83	472	1,680	4,520	472	283	221	87	25	6.1	2.5	1.8
17	59	302	4,440	2,300	421	283	265	86	26	5.8	2.3	1.8
18	43	221	2,530	2,360	374	252	227	80	25	5.8	2.3	1.8
19	34	309	1,840	1,560	329	298	204	76	23	4.9	2.3	2.9
20	28	255	1,240	1,170	290	393	178	70	22	4.9	2.3	2.9
21	23	210	1,260	919	269	378	164	67	21	4.9	2.3	2.3
22	21	207	2,870	633	249	357	159	61	21	4.9	2.3	4.6
23	18	162	1,720	494	227	381	164	59	19	4.6	2.2	29
24	17	138	1,480	628	936	370	159	68	18	4.6	2.2	37
25	15	118	1,090	753	1,350	357	168	80	17	4.6	2.2	32
26	14	104	713	507	1,440	333	185	63	16	4.4	2.2	24
27	13	103	733	437	1,220	305	199	57	15	4.1	2.2	20
28	12	92	570	385	927	269	180	52	14	3.6	2.2	17
29	12	84	437	429	------	242	166	49	13	3.6	2.2	14
30	12	77	353	476	------	580	151	45	13	3.6	2.2	12
31	12	------	294	485	------	575	------	44	------	3.6	2.2	------
TOTAL	843.9	7,025	24,624	31,679	20,937	13,547	7,759	2,655	763	203.7	80.7	232.5
MEAN	27.2	234	794	1,022	748	437	259	85.6	25.4	6.57	2.60	7.75
MAX	87	596	4,440	4,520	1,830	981	507	139	42	12	3.4	37
MIN	7.7	13	67	120	227	242	151	44	13	3.6	2.2	1.8
AC-FT	1,670	13,930	48,840	62,840	41,530	26,870	15,390	5,270	1,510	404	160	461

CAL YR 1972 TOTAL 125,404.7 MEAN 343 MAX 6,160 MIN 1.5 AC-FT 248,700
WTR YR 1973 TOTAL 110,349.8 MEAN 302 MAX 4,520 MIN 1.8 AC-FT 218,900

PEAK DISCHARGE (BASE, 6,000 CFS).--Dec. 17 (0630) 8,030 cfs (10.65 ft); Jan. 16 (0745) 7,880 cfs (10.58 ft).

11478500 VAN DUZEN RIVER NEAR BRIDGEVILLE, CALIF.

LOCATION.--Lat 40°28'50", long 123°53'23", in NE¼SE¼ sec.12, T.1 N., R.2 E., Humboldt County, on left bank at downstream side of bridge on State Highway 36, 0.9 mile upstream from Grizzly Creek, and 5 miles west of Bridgeville.

DRAINAGE AREA.--222 sq mi.

PERIOD OF RECORD.--October 1950 to current year.

GAGE.--Water-stage recorder. Datum of gage is 358.18 ft above mean sea level. Prior to Oct. 1, 1965, at site 2.4 miles upstream at different datum.

AVERAGE DISCHARGE.--23 years, 905 cfs (655,700 acre-ft per year).

EXTREMES.--Current year: Maximum discharge, 18,200 cfs Jan. 16 (gage height, 14.83 ft); minimum daily, 8.2 cfs Sept. 8-18.

Period of record: Maximum discharge, 48,700 cfs Dec. 22, 1964 (gage height, 24.0 ft, present site and datum, from floodmarks), from rating curve extended above 20,000 cfs on basis of slope-area measurement at gage height 21.3 ft, former site and datum; minimum, 5.0 cfs Sept. 13, 1959.

REMARKS.--Records good. No storage or large diversion above station. Records of chemical analyses and water temperatures for the current year are published in Part 2 of this report.

DISCHARGE, IN CUBIC FEET PER SECOND, WATER YEAR OCTOBER 1972 TO SEPTEMBER 1973

DAY	OCT	NOV	DEC	JAN	FEB	MAR	APR	MAY	JUN	JUL	AUG	SEP
1	48	35	161	657	1,240	2,130	1,400	272	88	32	13	9.5
2	39	62	150	588	1,100	1,620	1,200	254	85	31	12	9.4
3	34	145	180	536	1,030	1,550	992	244	80	30	12	9.1
4	29	1,340	436	463	2,780	1,540	857	247	76	28	11	8.9
5	27	630	294	401	6,400	1,290	794	240	73	26	11	8.6
6	25	323	272	363	3,190	1,480	759	219	67	26	11	8.6
7	23	414	278	334	2,370	1,300	704	208	64	25	11	8.5
8	22	438	242	333	1,980	1,180	632	203	62	24	11	8.2
9	22	384	208	1,450	1,860	1,040	596	193	60	24	10	8.2
10	27	920	206	1,910	3,640	1,400	566	185	58	24	10	8.2
11	88	1,120	193	5,690	2,640	1,560	566	178	56	23	10	8.2
12	151	692	199	8,480	2,460	1,180	548	173	55	22	10	8.2
13	139	616	196	7,730	1,820	1,020	572	170	55	22	10	8.2
14	190	1,250	190	3,780	1,690	878	578	170	55	22	10	8.2
15	139	763	199	3,210	1,430	745	475	165	53	21	10	8.2
16	154	1,190	2,710	12,900	1,150	698	440	158	52	20	9.8	8.2
17	133	700	11,800	5,940	1,010	759	520	152	54	19	9.5	8.2
18	107	504	6,220	5,700	878	656	490	148	54	19	9.5	8.2
19	86	800	4,580	3,670	773	1,160	450	142	52	18	9.5	10
20	73	699	2,430	2,480	692	1,420	402	136	49	17	9.5	22
21	64	538	2,470	2,280	626	1,370	366	128	46	17	9.5	49
22	56	573	8,850	1,850	566	1,210	346	122	44	17	9.5	35
23	52	417	5,040	1,650	515	1,160	346	116	42	16	9.3	88
24	47	335	4,290	1,610	2,050	1,060	338	130	41	16	9.1	145
25	41	280	2,360	1,830	3,730	960	334	173	40	16	9.2	121
26	37	245	1,710	1,460	3,680	871	350	142	39	15	9.5	79
27	35	230	1,990	1,280	2,800	780	358	120	37	15	9.5	57
28	34	211	1,590	1,140	1,940	698	342	108	36	15	9.5	46
29	34	192	1,190	1,340	------	614	314	100	34	14	9.5	39
30	33	173	954	1,530	------	1,370	293	95	33	13	9.5	34
31	32	------	780	1,530	------	1,480	------	93	------	13	9.5	------
TOTAL	2,021	16,219	62,368	84,115	56,040	36,179	16,928	5,184	1,640	640	313.4	877.8
MEAN	65.2	541	2,012	2,713	2,001	1,167	564	167	54.7	20.6	10.1	29.3
MAX	190	1,340	11,800	12,900	6,400	2,130	1,400	272	88	32	13	145
MIN	22	35	150	333	515	614	293	93	33	13	9.1	8.2
AC-FT	4,010	32,170	123,700	166,800	111,200	71,760	33,580	10,280	3,250	1,270	622	1,740

CAL YR 1972 TOTAL 321,477.7 MEAN 878 MAX 15,700 MIN 9.4 AC-FT 637,700
WTR YR 1973 TOTAL 282,525.2 MEAN 774 MAX 12,900 MIN 8.2 AC-FT 560,400

PEAK DISCHARGE (BASE, 15,000 CFS).--Dec. 17 (0730) 16,300 cfs (14.13 ft); Jan. 16 (0900) 18,200 cfs (14.83 ft).

11480400 RUTH RESERVOIR NEAR FOREST GLEN, CALIF.

LOCATION.--Lat 40°21'29", long 123°25'20", in SE¼SE¼ sec.19, T.1 S., R.7 E., Trinity County, Six Rivers National Forest, near center of Ruth Dam on Mad River, 5.2 miles west of Forest Glen.
DRAINAGE AREA.--119 sq mi.
PERIOD OF RECORD.--October 1966 to current year. Records prior to October 1966 in files of Humboldt Bay Municipal Water District.
GAGE.--Water-stage recorder. Datum of gage is at mean sea level (levels by Humboldt Bay Municipal Water District).
EXTREMES.--Current year: Maximum contents, 58,300 acre-ft Jan. 16 (elevation, 2,659.73 ft); minimum, 25,600 acre-ft Nov. 3 (elevation, 2,627.20 ft).
Period of record: Maximum contents, 63,500 acre-ft Jan. 24, 1970 (elevation, 2,663.87 ft); minimum, 14,700 acre-ft Nov. 16 to Dec. 2, 1967 (elevation, 2,612.34 ft).
REMARKS.--Reservoir is formed by earthfill dam; storage began July 1961. Total capacity, 51,800 acre-ft at elevation 2,654.0 ft, crest of spillway. Water is released down Mad River for municipal use. Records given herein represent total contents.

CAPACITY TABLE (ELEVATION, IN FEET, AND CONTENTS, IN ACRE-FEET)

2,595	6,670	2,640	37,300
2,600	8,520	2,645	42,300
2,605	10,700	2,650	47,400
2,610	13,300	2,655	52,900
2,615	16,500	2,660	58,700
2,620	20,100	2,665	65,000
2,625	23,900	2,670	72,300
2,630	27,800	2,675	80,300
2,635	32,500		

CONTENTS, IN ACRE-FEET, AT 2400, WATER YEAR OCTOBER 1972 TO SEPTEMBER 1973

DAY	OCT	NOV	DEC	JAN	FEB	MAR	APR	MAY	JUN	JUL	AUG	SEP
1	31,800	25,800	28,900	51,800	52,500	53,400	52,200	52,000	51,000	47,400	41,800	35,400
2	31,600	25,700	28,800	51,500	52,400	53,100	52,200	52,100	50,900	47,200	41,600	35,200
3	31,400	25,700	28,800	51,200	52,300	53,100	52,100	52,100	50,800	47,100	41,400	35,000
4	31,200	25,700	28,800	50,900	53,300	53,000	52,000	52,200	50,800	47,000	41,200	34,700
5	31,000	25,700	28,800	50,600	54,200	52,900	51,900	52,200	50,700	46,800	41,000	34,500
6	30,800	25,700	28,800	50,200	53,900	52,900	51,800	52,200	50,600	46,700	40,800	34,300
7	30,700	25,900	28,700	49,700	53,500	52,800	51,600	52,200	50,500	46,500	40,600	34,100
8	30,400	26,000	28,600	49,500	53,100	52,700	51,400	52,200	50,400	46,400	40,400	33,900
9	30,200	26,200	28,600	49,600	53,200	52,600	51,200	52,200	50,300	46,200	40,200	33,600
10	30,100	26,700	28,400	50,300	53,700	52,600	50,900	52,200	50,200	46,000	40,000	33,400
11	29,900	27,200	28,400	56,700	53,700	52,700	50,700	52,100	50,100	45,900	39,800	33,200
12	29,700	27,400	28,300	57,500	53,500	52,600	50,500	52,100	49,900	45,700	39,600	32,900
13	29,500	27,600	28,200	56,500	53,300	52,500	50,400	52,000	49,800	45,500	39,400	32,700
14	29,300	28,000	28,100	55,000	53,100	52,300	50,400	52,000	49,700	45,300	39,200	32,400
15	29,200	28,200	28,100	55,200	52,900	52,200	50,300	52,000	49,600	45,200	39,000	32,200
16	29,000	28,600	30,900	58,100	52,700	52,100	50,200	51,900	49,400	45,000	38,700	31,900
17	28,800	28,800	40,500	56,300	52,500	51,900	50,200	51,900	49,300	44,800	38,500	31,600
18	28,600	28,900	44,600	56,200	52,400	51,800	50,300	51,900	49,200	44,600	38,300	31,400
19	28,400	29,200	47,700	55,100	52,200	51,700	50,400	51,800	49,100	44,400	38,100	31,300
20	28,200	29,400	49,100	54,300	52,100	51,800	50,400	51,800	48,900	44,200	37,900	31,000
21	28,100	29,500	50,700	53,700	51,900	51,900	50,500	51,800	48,800	44,000	37,700	30,800
22	27,800	29,600	54,100	53,300	51,700	52,000	50,600	51,700	48,600	43,900	37,500	30,600
23	27,600	29,600	54,400	53,000	51,500	52,000	50,700	51,600	48,500	43,700	37,300	30,400
24	27,400	29,600	54,000	53,000	52,300	52,100	50,900	51,600	48,400	43,500	37,100	30,100
25	27,200	29,500	53,500	53,100	53,200	52,100	51,100	51,500	48,200	43,300	36,800	29,900
26	27,000	29,400	53,000	52,900	53,800	52,000	51,300	51,500	48,000	43,200	36,600	29,600
27	26,800	29,400	52,900	52,700	53,800	51,900	51,400	51,500	47,900	43,000	36,400	29,400
28	26,600	29,300	52,700	52,600	53,500	51,800	51,600	51,400	47,700	42,800	36,200	29,200
29	26,400	29,200	52,400	52,500	------	51,700	51,700	51,300	47,500	42,600	36,000	28,900
30	26,200	29,000	52,200	52,500	------	51,900	51,900	51,200	47,400	42,300	35,800	28,600
31	26,000	------	52,000	52,500	------	52,200	------	51,100	------	42,100	35,600	------
MAX	31,800	29,600	54,400	58,100	54,200	53,400	52,200	52,200	51,000	47,400	41,800	35,400
MIN	26,000	25,700	28,100	49,500	51,500	51,700	50,200	51,100	47,400	42,100	35,600	28,600
(a)	2,627.72	2,631.36	2,654.13	2,654.65	2,655.48	2,654.33	2,654.06	2,653.38	2,650.02	2,644.74	2,638.24	2,630.94
(b)	-6,000	+3,000	+23,000	+500	+1,000	-1,300	-300	-800	-3,700	-5,300	-6,500	-7,000

CAL YR 1972 b +12,100
WTR YR 1973 b -3,400

a Elevation, in feet, at end of month.
b Change in contents, in acre-feet.

11480500 MAD RIVER NEAR FOREST GLEN, CALIF.

LOCATION.--Lat 40°27'30", long 123°30'35", in SW¼ sec.16, T.1 N., R.6 E., Trinity County, Six Rivers National Forest, on right bank 0.7 mile downstream from Lamb Creek, and 11.1 miles northwest of Forest Glen.

DRAINAGE AREA.--143 sq mi.

PERIOD OF RECORD.--June 1953 to current year.

GAGE.--Water-stage recorder. Datum of gage is 2,408.18 ft above mean sea level. Prior to Dec. 22, 1955, water-stage recorder at site 0.7 mile upstream at different datum. Jan. 13 to June 18, 1956, nonrecording gage at former site at datum 4.17 ft lower than former datum.

AVERAGE DISCHARGE.--20 years, 379 cfs (274,600 acre-ft per year).

EXTREMES.--Current year: Maximum discharge, 6,050 cfs Jan. 16 (gage height, 9.11 ft); minimum daily, 22 cfs Apr. 29.
Period of record: Maximum discharge, 39,200 cfs Dec. 22, 1955 (gage height, 24.5 ft, from floodmarks, present datum), from rating curve extended above 8,100 cfs on basis of slope-area measurement of maximum flow; minimum daily, 0.60 cfs Sept. 15, 1961.

REMARKS.--Records excellent. Flow regulated by Ruth Reservoir 9 miles upstream beginning in July 1961 (see sta 11480400). No diversion above station. Records of chemical analyses, water temperatures and suspended-sediment discharge for the current year are published in Part 2 of this report.

REVISIONS (WATER YEARS).--WSP 1395: 1954. WSP 1715: 1957(M), 1958(P).

DISCHARGE, IN CUBIC FEET PER SECOND, WATER YEAR OCTOBER 1972 TO SEPTEMBER 1973

DAY	OCT	NOV	DEC	JAN	FEB	MAR	APR	MAY	JUN	JUL	AUG	SEP
1	108	107	101	398	567	989	485	34	80	48	123	95
2	108	104	101	382	516	884	483	50	65	48	101	95
3	108	134	105	377	489	822	462	63	65	50	101	95
4	108	143	105	373	669	796	436	75	64	75	100	95
5	108	117	104	369	1,480	734	412	79	64	75	98	97
6	108	111	106	368	1,370	734	391	83	63	75	97	99
7	108	138	105	366	1,090	710	381	80	63	75	96	97
8	108	119	103	368	893	670	378	75	63	75	89	95
9	108	149	103	416	828	620	376	77	62	75	89	95
10	111	151	103	440	1,170	603	376	87	62	89	89	95
11	117	170	101	1,800	1,200	628	375	112	62	90	89	95
12	111	130	102	4,720	1,140	614	358	98	62	90	92	95
13	114	170	102	4,510	979	575	274	90	60	90	97	96
14	116	198	102	2,620	881	525	266	84	61	89	97	112
15	117	144	104	1,840	777	480	262	77	63	90	97	112
16	112	161	457	4,980	685	447	250	71	78	90	97	111
17	110	133	1,010	4,350	610	422	180	67	79	90	97	110
18	80	123	543	3,430	548	398	166	63	79	90	97	110
19	105	133	377	2,750	497	399	123	59	77	91	96	118
20	105	123	360	1,820	452	413	122	55	77	91	92	111
21	105	119	538	1,340	414	426	120	54	77	91	83	110
22	105	115	1,020	1,030	391	434	119	56	77	91	95	114
23	105	112	1,650	828	381	444	102	84	77	90	95	111
24	105	110	1,600	749	532	450	33	87	77	89	96	109
25	106	108	1,220	805	776	447	26	86	78	89	97	108
26	106	107	911	749	1,150	436	25	65	90	89	97	108
27	105	105	773	674	1,270	419	24	37	91	90	97	108
28	106	103	695	610	1,100	399	24	74	89	102	97	108
29	105	103	590	600	------	385	22	81	75	102	92	108
30	104	101	504	600	------	416	24	81	49	103	85	108
31	104	------	441	595	------	438	------	81	------	125	88	------
TOTAL	3,326	3,841	14,236	45,257	22,855	17,157	7,075	2,265	2,129	2,647	2,956	3,120
MEAN	107	128	459	1,460	816	553	236	73.1	71.0	85.4	95.4	104
MAX	117	198	1,650	4,980	1,480	989	485	112	91	125	123	118
MIN	80	101	101	366	381	385	22	34	49	48	83	95
AC-FT	6,600	7,620	28,240	89,770	45,330	34,030	14,030	4,490	4,220	5,250	5,860	6,190

CAL YR 1972 TOTAL 126,449 MEAN 345 MAX 4,970 MIN 32 AC-FT 250,800
WTR YR 1973 TOTAL 126,864 MEAN 348 MAX 4,980 MIN 22 AC-FT 251,600

11480750 MAD RIVER NEAR KNEELAND, CALIF.

LOCATION.--Lat 40°45'50", long 123°53'20", in NW¼NW¼ sec.6, T.4 N., R.3 E., Humboldt County, on left bank at mouth of Maple Creek 30 ft upstream from bridge, and 5.4 miles east of Kneeland.

DRAINAGE AREA.--352 sq mi.

PERIOD OF RECORD.--October 1965 to current year.

GAGE.--Water-stage recorder. Datum of gage is 329.66 ft above mean sea level.

AVERAGE DISCHARGE.--8 years, 1,177 cfs (852,700 acre-ft per year).

EXTREMES.--Current year: Maximum discharge, 12,500 cfs Jan. 16 (gage height, unknown); minimum daily, 90 cfs July 2-4, Aug. 22.
Period of record: Maximum discharge, 33,300 cfs Mar. 2, 1972 (gage height, 22.57 ft); minimum daily, 55 cfs Oct. 3-8, Nov. 5, 1966.
Flood of Dec. 22, 1964, reached a stage of 37.99 ft, from floodmarks (discharge, 55,000 cfs).

REMARKS.--Records poor. Flow regulated by Ruth Reservoir 47 miles upstream (see sta 11480400). No diversion above station. Records of chemical analyses, water temperatures, suspended-sediment discharge, and sediment and turbidity data for the current year are published in Part 2 of this report.

REVISIONS (WATER YEARS).--WRD Calif. 1971: 1970.

DISCHARGE, IN CUBIC FEET PER SECOND, WATER YEAR OCTOBER 1972 TO SEPTEMBER 1973

DAY	OCT	NOV	DEC	JAN	FEB	MAR	APR	MAY	JUN	JUL	AUG	SEP
1	130	121	211	1,130	1,600	2,880	2,140	300	171	99	144	99
2	125	160	207	1,050	1,450	2,420	1,880	295	162	90	144	108
3	123	148	628	1,000	1,350	2,250	1,650	300	153	90	128	108
4	119	585	860	960	1,600	2,280	1,450	345	144	90	120	108
5	119	523	478	910	4,400	2,000	1,360	345	144	99	120	108
6	116	211	511	890	3,500	2,090	1,260	325	136	108	120	108
7	114	234	430	860	3,000	1,930	1,160	315	136	108	120	120
8	112	253	344	850	2,500	1,810	1,080	295	128	108	120	128
9	119	196	299	1,250	2,200	1,690	1,040	280	128	108	108	128
10	130	377	282	1,600	3,800	2,270	997	270	128	108	99	128
11	151	571	257	3,100	3,700	2,350	961	280	120	120	99	128
12	157	592	286	8,300	3,600	1,830	925	290	120	120	99	128
13	154	326	270	8,500	3,000	1,670	856	265	120	120	99	128
14	148	704	253	5,800	2,700	1,460	779	250	120	120	99	128
15	143	494	299	4,090	2,400	1,270	719	235	120	120	99	136
16	146	592	2,760	10,000	2,000	1,140	704	220	120	120	99	144
17	143	540	8,350	9,200	1,750	1,170	830	210	136	120	99	144
18	138	386	4,910	8,600	1,550	1,140	714	200	136	108	99	144
19	121	506	3,840	6,700	1,350	1,600	694	195	128	99	99	144
20	116	881	2,280	4,500	1,250	2,140	595	190	128	99	99	171
21	123	546	2,030	3,500	1,100	2,000	555	180	120	99	99	144
22	123	697	4,800	2,700	1,000	1,800	535	180	120	99	90	153
23	123	523	4,600	2,300	960	1,710	520	176	120	99	108	384
24	121	401	4,800	1,950	1,450	1,680	465	245	120	99	108	355
25	119	330	3,100	2,250	3,300	1,610	414	255	120	99	108	290
26	116	286	2,330	1,900	4,100	1,470	404	210	120	99	108	185
27	116	270	2,100	1,650	3,660	1,330	384	180	120	99	108	136
28	116	242	1,850	1,500	2,900	1,220	365	153	120	99	108	123
29	119	222	1,600	1,500	------	1,120	340	162	120	120	108	123
30	116	214	1,400	1,600	------	1,980	320	171	120	120	108	120
31	114	------	1,250	1,750	------	2,170	------	171	------	120	99	------
TOTAL	3,930	12,131	57,615	101,890	67,170	55,480	26,096	7,488	3,878	3,306	3,365	4,551
MEAN	127	404	1,859	3,287	2,399	1,790	870	242	129	107	109	152
MAX	157	881	8,350	10,000	4,400	2,880	2,140	345	171	120	144	384
MIN	112	121	207	850	960	1,120	320	153	120	90	90	99
AC-FT	7,800	24,060	114,300	202,100	133,200	110,000	51,760	14,850	7,690	6,560	6,670	9,030

CAL YR 1972 TOTAL 431,624 MEAN 1,179 MAX 23,200 MIN 89 AC-FT 856,100
WTR YR 1973 TOTAL 346,900 MEAN 950 MAX 10,000 MIN 90 AC-FT 688,100

NOTE.--No gage-height record Dec. 27 to Feb. 25.

11480780 MAD RIVER NEAR BLUE LAKE, CALIF.

LOCATION.--Lat 40°50'47", long 123°58'54", in NW¼ sec.5, T.5 N., R.2 E., Humboldt County, on right bank 0.3 mile upstream from small left-bank tributary, and 2.4 miles south of town of Blue Lake.

DRAINAGE AREA.--393 sq mi.

PERIOD OF RECORD.--December 1972 to September 1973.

GAGE.--Water-stage recorder. Altitude of gage is 130 ft (from topographic map).

EXTREMES.--Maximum discharge during period, 13,600 cfs Jan. 16 (gage height, 15.33 ft); minimum daily, 86 cfs July 3, 4.

REMARKS.--Records good. Flow regulated by Ruth Reservoir 61 miles upstream (see sta 11480400). No diversion above station. Records of chemical analyses, water temperatures, and suspended-sediment discharge for the current year are published in Part 2 of this report.

DISCHARGE, IN CUBIC FEET PER SECOND, WATER YEAR OCTOBER 1972 TO SEPTEMBER 1973

DAY	OCT	NOV	DEC	JAN	FEB	MAR	APR	MAY	JUN	JUL	AUG	SEP
1			220	1,150	1,660	3,000	2,810	352	182	102	131	93
2			210	1,090	1,520	2,670	2,390	340	176	89	138	101
3			580	1,040	1,420	2,430	1,920	343	163	86	119	102
4			1,000	984	1,650	2,390	1,600	372	156	86	113	102
5			642	935	5,290	2,030	1,400	385	151	94	112	101
6			724	909	4,040	1,950	1,260	367	145	106	111	103
7			626	878	3,230	1,950	1,120	350	142	105	111	106
8			493	865	2,650	1,680	1,040	322	139	105	111	106
9			397	1,300	2,280	1,360	990	311	135	104	104	105
10	a128		365	1,620	4,130	2,110	964	316	134	103	102	104
11			326	3,100	4,020	2,700	948	308	131	109	101	103
12			360	7,780	3,940	2,210	930	308	129	116	101	104
13			353	9,190	3,240	1,790	887	305	134	118	100	104
14			328	5,830	2,890	1,560	802	296	130	113	107	104
15			342	4,200	2,640	1,300	743	275	129	112	106	114
16			1,530	10,200	2,240	1,190	743	250	129	111	106	120
17			7,680	9,370	1,910	1,480	949	230	156	111	106	120
18			4,900	8,580	1,650	1,200	848	214	153	110	106	120
19			4,270	7,080	1,460	2,190	843	205	144	109	106	131
20			2,580	4,920	1,310	2,950	696	199	140	111	105	188
21			1,990	3,920	1,180	2,800	649	191	135	112	105	160
22			5,050	3,010	1,090	2,410	609	184	132	110	92	170
23			4,760	2,340	1,020	2,330	589	180	131	109	98	342
24			5,020	1,980	1,510	2,290	548	233	130	109	107	353
25			3,400	2,360	3,310	2,130	470	269	127	109	111	304
26			2,490	1,990	3,920	1,870	451	225	126	108	110	203
27			2,260	1,760	3,830	1,620	445	204	132	107	108	165
28			2,120	1,560	3,210	1,430	402	167	132	105	107	150
29			1,700	1,560	------	1,330	403	176	130	112	106	143
30		a239	1,460	1,760	------	2,510	367	186	121	116	105	140
31		------	1,280	1,870	------	2,810	------	185	------	115	94	------
TOTAL			59,456	105,131	72,240	63,670	28,816	8,248	4,194	3,312	3,339	4,361
MEAN			1,918	3,391	2,580	2,054	961	266	140	107	108	145
MAX			7,680	10,200	5,290	3,000	2,810	385	182	118	138	353
MIN			210	865	1,020	1,190	367	167	121	86	92	93
AC-FT			117,900	208,500	143,300	126,300	57,160	16,360	8,320	6,570	6,620	8,650

a Result of discharge measurement.

11480800 NORTH FORK MAD RIVER NEAR KORBEL, CALIF.

LOCATION.--Lat 40°53'11", long 123°56'26", in SW¼ sec.22, T.6 N., R.2 E., Humboldt County, on left bank 0.5 mile downstream from Bald Mountain Creek, 1.2 miles northeast of Korbel, and 2.5 miles east of town of Blue Lake.

DRAINAGE AREA.--40.4 sq mi.

PERIOD OF RECORD.--October 1957 to September 1964, October 1972 to current year.

GAGE.--Water-stage recorder. Altitude of gage is 250 ft (from topographic map).

AVERAGE DISCHARGE.--8 years, 132 cfs (95,630 acre-ft per year).

EXTREMES.--Current year: Maximum discharge, 1,520 cfs Dec. 17 (gage height, 7.74 ft); minimum daily, 1.9 cfs Oct. 8.
Period of record: Maximum discharge, 8,400 cfs Jan. 20, 1964 (gage height, 15.75 ft); minimum daily, 1.2 cfs Sept. 10, 11, 1959.

REMARKS.--Records good. No regulation or diversion above station. Records of suspended-sediment discharge for the current year are published in Part 2 of this report.

DISCHARGE, IN CUBIC FEET PER SECOND, WATER YEAR OCTOBER 1972 TO SEPTEMBER 1973

DAY	OCT	NOV	DEC	JAN	FEB	MAR	APR	MAY	JUN	JUL	AUG	SEP
1	2.4	11	12	104	183	259	397	30	14	7.6	4.0	3.2
2	2.4	16	11	97	152	186	267	29	13	7.4	3.9	3.0
3	2.3	77	137	87	129	372	197	27	13	7.2	3.8	2.8
4	2.2	190	177	79	122	275	159	37	12	7.0	3.7	2.7
5	2.2	62	107	71	185	197	134	31	12	6.9	3.7	2.7
6	2.2	40	152	64	141	186	113	27	11	6.9	3.6	2.7
7	2.1	85	115	59	118	146	98	25	11	6.6	3.6	2.9
8	1.9	48	77	60	103	124	89	24	10	6.6	3.6	3.0
9	2.1	32	55	85	104	106	80	23	10	6.4	3.6	2.8
10	2.8	29	42	144	424	285	75	22	10	6.2	3.7	2.7
11	12	142	35	435	339	309	68	20	9.8	6.1	3.8	2.5
12	15	78	44	666	386	222	64	20	10	6.0	3.7	2.5
13	9.1	43	51	730	268	178	64	19	12	5.9	3.7	2.5
14	9.2	35	43	345	223	140	59	18	10	5.7	3.6	2.7
15	5.9	27	42	252	188	117	54	17	10	5.6	3.5	2.7
16	4.9	31	523	837	158	150	63	17	11	5.6	3.4	2.8
17	7.5	22	1,180	601	135	223	107	16	19	5.6	3.4	2.7
18	5.6	29	642	736	119	184	84	16	14	5.6	3.4	2.7
19	4.5	79	529	562	106	483	83	16	12	5.6	3.3	6.5
20	4.1	60	331	387	95	528	72	16	11	5.8	3.2	18
21	3.5	79	263	361	88	461	64	15	9.8	5.9	3.2	11
22	3.4	116	787	277	79	359	58	15	9.5	5.7	3.2	25
23	3.0	65	652	218	72	254	52	15	10	5.3	3.2	109
24	2.6	43	615	241	85	201	48	24	9.6	5.1	3.3	131
25	2.6	31	330	291	97	169	44	24	8.9	5.0	3.9	54
26	2.6	24	223	223	113	143	41	18	8.5	4.8	4.0	21
27	2.6	21	284	185	113	122	38	16	8.3	4.6	3.8	14
28	3.1	18	255	156	103	111	36	15	8.0	4.4	3.6	11
29	3.5	15	184	154	------	98	33	14	8.0	4.2	3.4	8.9
30	3.2	13	147	193	------	334	31	14	8.0	4.2	3.2	8.6
31	3.0	------	121	242	------	322	------	14	------	4.0	3.2	------
TOTAL	133.5	1,561	8,166	8,942	4,428	7,244	2,772	634	323.4	179.5	110.2	467.6
MEAN	4.31	52.0	263	288	158	234	92.4	20.5	10.8	5.79	3.55	15.6
MAX	15	190	1,180	837	424	528	397	37	19	7.6	4.0	131
MIN	1.9	11	11	59	72	98	31	14	8.0	4.0	3.2	2.5
AC-FT	265	3,100	16,200	17,740	8,780	14,370	5,500	1,260	641	356	219	927

WTR YR 1973 TOTAL 34,961.2 MEAN 95.8 MAX 1,180 MIN 1.9 AC-FT 69,350

PEAK DISCHARGE (BASE, 1,500 CFS).--Dec. 17 (1030) 1,520 cfs (7.74 ft).

11481000 MAD RIVER NEAR ARCATA, CALIF.

LOCATION.--Lat 40°54'35", long 124°03'35", in NW¼ sec.15, T.6 N., R.1 E., Humboldt County, on right bank 100 ft upstream from bridge on U.S. Highway 299, 1.0 mile downstream from Warren Creek, and 2.8 miles northeast of Arcata.

DRAINAGE AREA.--485 sq mi.

PERIOD OF RECORD.--October 1910 to September 1913, August 1950 to current year. Monthly discharge only for some periods published in WSP 1315-B.

GAGE.--Water-stage recorder. Datum of gage is 12.79 ft above mean sea level. December 1910 to September 1913, nonrecording gage at site 0.1 mile upstream at different datum. Aug. 15, 1950, to July 23, 1956, water-stage recorder at site 0.6 mile upstream at datum 11.00 ft higher. July 24, 1956, to Apr. 9, 1965, water-stage recorder at datum 5.00 ft higher. Aug. 29 to Oct. 26, 1961, auxiliary water-stage recorder at site 0.5 mile downstream at different datum.

AVERAGE DISCHARGE (adjusted for diversions).--26 years, 1,521 cfs (1,102,000 acre-ft per year).

EXTREMES.--Current year: Maximum discharge, 14,800 cfs Jan. 16 (gage height, 13.07 ft); minimum daily, 12 cfs Aug. 23.
Period of record: Maximum discharge, 81,000 cfs Dec. 22, 1964 (gage height, 30.7 ft, present datum, from high-water mark profile); minimum, 0.75 cfs July 31, 1970.

REMARKS.--Records good. Flow regulated by Ruth Reservoir 68 miles upstream beginning in July 1961 (see sta 11480400). Water is diverted 0.5 mile upstream from station for municipal supply and industrial use in Humboldt Bay area. Records of chemical analyses, water temperatures, suspended-sediment discharge, and sediment and turbidity data for the current year are published in Part 2 of this report.

REVISIONS (WATER YEARS).--WRD Calif. 1972: 1965(M).

DISCHARGE, IN CUBIC FEET PER SECOND, WATER YEAR OCTOBER 1972 TO SEPTEMBER 1973

DAY	OCT	NOV	DEC	JAN	FEB	MAR	APR	MAY	JUN	JUL	AUG	SEP
1	68	53	190	1,200	2,020	3,480	3,240	295	123	56	25	13
2	59	113	182	1,090	1,780	2,930	2,610	285	114	46	38	14
3	54	157	404	1,020	1,630	3,120	2,080	280	103	69	34	28
4	44	682	1,140	950	1,760	3,060	1,780	316	88	67	24	26
5	46	571	659	878	5,760	2,490	1,600	339	80	53	22	19
6	51	273	875	835	4,290	2,400	1,480	309	73	44	23	18
7	42	375	740	795	3,250	2,200	1,350	290	68	38	23	18
8	42	343	522	780	2,550	2,000	1,220	276	66	34	20	21
9	44	253	395	1,190	2,260	1,790	1,140	257	60	30	19	20
10	58	407	347	1,790	4,990	2,650	1,080	248	57	27	16	16
11	82	724	306	3,650	4,730	3,430	1,040	234	54	25	15	15
12	127	718	348	8,740	4,730	2,480	1,000	252	53	24	16	18
13	109	445	366	10,100	3,670	2,040	960	230	59	27	15	18
14	109	675	318	6,650	3,100	1,740	882	217	55	26	16	18
15	105	534	312	4,600	2,840	1,540	801	203	51	28	20	21
16	94	570	1,480	10,800	2,330	1,500	774	186	54	28	20	29
17	96	484	9,660	10,400	2,020	1,880	995	176	81	27	16	27
18	84	381	6,420	9,730	1,770	1,610	876	163	93	23	18	26
19	76	493	5,810	8,280	1,600	3,000	860	158	72	17	18	38
20	51	698	3,330	5,920	1,440	4,310	737	153	73	24	17	104
21	59	519	2,430	5,040	1,300	3,580	670	153	56	24	16	89
22	58	725	6,690	3,810	1,190	2,880	616	134	51	21	13	99
23	53	533	6,350	2,940	1,110	2,350	586	127	50	19	12	361
24	54	407	6,810	2,560	1,420	2,120	538	185	49	17	19	488
25	42	322	4,320	3,160	3,370	2,000	460	247	47	17	24	399
26	54	273	2,950	2,660	3,510	1,830	430	201	45	16	23	211
27	47	250	2,840	2,240	3,890	1,640	409	170	42	15	19	141
28	53	233	2,780	1,960	3,220	1,500	382	127	51	18	18	110
29	58	221	2,020	1,920	------	1,340	350	113	66	19	17	94
30	53	204	1,660	2,200	------	2,510	319	127	69	22	17	85
31	47	------	1,420	2,380	------	3,150	------	128	------	21	14	------
TOTAL	2,019	12,636	74,074	120,268	77,530	74,550	31,265	6,579	2,003	922	607	2,584
MEAN	65.1	421	2,389	3,880	2,769	2,405	1,042	212	66.8	29.7	19.6	86.1
MAX	127	725	9,660	10,800	5,760	4,310	3,240	339	123	69	38	488
MIN	42	53	182	780	1,110	1,340	319	113	42	15	12	13
AC-FT	4,000	25,060	146,900	238,600	153,800	147,900	62,010	13,050	3,970	1,830	1,200	5,130
(a)	5,170	4,850	4,370	4,810	3,960	4,750	4,660	5,210	5,350	5,220	5,720	4,870

CAL YR 1972 TOTAL 532,965.4 MEAN 1,456 MAX 34,200 MIN 5.6 AC-FT 1,057,000 a 57,810
WTR YR 1973 TOTAL 405,037.0 MEAN 1,110 MAX 10,800 MIN 12 AC-FT 803,400 a 58,940

a Diversion, in acre-feet, for municipal supply and industrial use, furnished by Humboldt Municipal Water District.

11481200 LITTLE RIVER NEAR TRINIDAD, CALIF.

LOCATION.--Lat 41°00'40", long 124°04'50", in NE¼ sec.8, T.7 N., R.1 E., Humboldt County, on right bank 0.5 mile upstream from Coon Creek, 4.7 miles southeast of Trinidad, and 9.1 miles north of Arcata.

DRAINAGE AREA.--44.4 sq mi.

PERIOD OF RECORD.--October 1955 to current year. Prior to October 1971, published as "at Crannell."

GAGE.--Water-stage recorder and crest-stage gage. Datum of gage is 17.62 ft above mean sea level.

AVERAGE DISCHARGE.--18 years, 143 cfs (103,600 acre-ft per year).

EXTREMES.--Current year: Maximum discharge, 1,980 cfs Jan. 16 (gage height, 5.80 ft, from crest-stage gage); minimum daily, 4.8 cfs Aug. 31 to Sept. 21.

Period of record: Maximum discharge, 9,720 cfs Jan. 22, 1972 (gage height, 14.08 ft), from rating curve extended above 3,100 cfs on basis of slope-area measurement of maximum flow; minimum daily, 2.8 cfs Oct. 20-22, 1964.

Flood of Jan. 17, 18, 1953, reached a stage of 15.7 ft, observed by an employee of Hammond Lumber Co.

REMARKS.--Records fair. No storage or diversion above station.

REVISIONS (WATER YEARS).--WRD Calif. 1964: 1956-60.

DISCHARGE, IN CUBIC FEET PER SECOND, WATER YEAR OCTOBER 1972 TO SEPTEMBER 1973

DAY	OCT	NOV	DEC	JAN	FEB	MAR	APR	MAY	JUN	JUL	AUG	SEP
1	7.8	9.0	14	190	214	276	300	33	18	10	7.1	4.8
2	7.4	9.0	14	165	178	198	220	32	18	9.5	7.1	4.8
3	7.1	9.2	63	148	155	214	168	31	17	9.5	7.1	4.8
4	7.1	50	137	130	140	214	135	36	16	9.2	6.7	4.8
5	6.4	40	94	116	211	178	115	33	15	9.2	6.7	4.8
6	7.8	52	193	104	168	195	100	30	14	9.2	6.7	4.8
7	8.1	62	142	94	140	165	91	30	14	8.8	6.7	4.8
8	8.1	54	90	106	124	151	82	29	13	8.8	6.7	4.8
9	8.8	48	60	470	118	131	74	27	13	8.8	6.7	4.8
10	11	64	45	405	342	286	67	26	12	8.8	6.4	4.8
11	22	81	36	510	321	314	62	25	12	8.8	6.4	4.8
12	25	54	45	720	406	229	59	25	14	8.8	6.4	4.8
13	11	36	57	700	283	188	57	23	13	8.1	6.4	4.8
14	11	30	46	690	244	153	54	23	12	8.1	6.4	4.8
15	10	22	44	480	208	131	51	22	14	8.1	6.4	4.8
16	10	22	390	1,500	178	170	57	22	17	8.1	6.0	4.8
17	9.8	19	1,270	970	155	241	81	22	14	8.1	6.0	4.8
18	9.6	22	690	630	135	190	62	21	12	8.1	6.0	4.8
19	9.4	84	725	586	120	725	60	21	12	8.1	6.0	4.8
20	9.2	60	478	446	108	626	53	20	12	8.1	6.0	4.8
21	9.0	68	332	414	100	478	48	20	12	8.1	6.0	4.8
22	9.0	127	830	325	91	370	45	25	12	7.8	5.7	8.8
23	8.8	68	480	250	85	269	43	35	12	7.8	5.7	16
24	8.8	43	920	241	92	195	41	38	12	7.8	5.7	14
25	8.8	31	560	283	104	165	39	25	12	7.8	5.7	33
26	8.8	25	380	232	151	137	38	28	12	7.8	5.7	50
27	8.6	22	400	198	137	120	37	28	12	7.8	5.7	32
28	8.6	19	320	170	122	106	35	28	11	7.8	5.4	22
29	8.6	17	280	163	------	95	34	23	11	7.1	5.1	16
30	8.6	16	240	200	------	259	34	22	10	7.1	5.1	13
31	8.6	------	210	307	------	241	------	18	------	7.1	4.8	------
TOTAL	302.8	1,263.2	9,585	11,943	4,830	7,410	2,342	821	398	258.2	190.5	305.6
MEAN	9.77	42.1	309	385	173	239	78.1	26.5	13.3	8.33	6.15	10.2
MAX	25	127	1,270	1,500	406	725	300	38	18	10	7.1	50
MIN	6.4	9.0	14	94	85	95	34	18	10	7.1	4.8	4.8
AC-FT	601	2,510	19,010	23,690	9,580	14,700	4,650	1,630	789	512	378	606

CAL YR 1972 TOTAL 66,565.4 MEAN 182 MAX 7,740 MIN 6.0 AC-FT 132,000
WTR YR 1973 TOTAL 39,649.3 MEAN 109 MAX 1,500 MIN 4.8 AC-FT 78,640

PEAK DISCHARGE (BASE, 3,000 CFS).--No peak above base.

NOTE.--No gage-height record Oct. 13 to Nov. 12, Dec. 24 to Jan. 18, July 21 to Aug. 28.

11481500 REDWOOD CREEK NEAR BLUE LAKE, CALIF.

LOCATION.--Lat 40°54'22", long 123°48'51", in SE¼NE¼ sec.15, T.6 N., R.3 E., Humboldt County, on right bank 400 ft upstream from Lupton Creek, and 9.1 miles east of town of Blue Lake.

DRAINAGE AREA.--67.6 sq mi.

PERIOD OF RECORD.--June 1953 to September 1958, October 1972 to current year.

GAGE.--Water-stage recorder. Altitude of gage is 850 ft (from topographic map).

AVERAGE DISCHARGE.--6 years, 283 cfs (205,000 acre-ft per year).

EXTREMES.--Current year: Maximum discharge, 2,980 cfs Jan. 16 (gage height, 9.35 ft); minimum daily, 3.6 cfs Sept. 3-18.
Period of record: Maximum discharge, 12,100 cfs Dec. 21, 1955 (gage height, 13.68 ft), from rating curve extended above 5,800 cfs; minimum daily, 3.6 cfs Sept. 3-18, 1973.

REMARKS.--Records poor. No regulation or diversion above station. Records of water temperatures and suspended-sediment discharge for the current year are published in Part 2 of this report.

DISCHARGE, IN CUBIC FEET PER SECOND, WATER YEAR OCTOBER 1972 TO SEPTEMBER 1973

DAY	OCT	NOV	DEC	JAN	FEB	MAR	APR	MAY	JUN	JUL	AUG	SEP
1	9.6	13	43	186	450	504	598	108	50	24	5.5	3.9
2	8.9	32	40	168	340	416	528	103	49	23	5.1	3.9
3	8.5	63	40	168	500	448	475	101	49	24	5.1	3.6
4	8.1	210	230	165	701	425	440	103	47	23	5.1	3.6
5	7.8	120	146	146	681	368	425	96	46	21	5.1	3.6
6	7.4	63	166	139	421	320	395	89	46	19	5.1	3.6
7	7.0	118	140	136	374	280	365	85	44	19	5.5	3.6
8	7.0	74	109	130	370	256	338	85	44	18	5.5	3.6
9	7.4	71	89	133	396	252	316	82	44	15	5.5	3.6
10	11	112	83	186	705	491	296	80	43	14	5.5	3.6
11	16	161	74	420	529	487	292	76	43	13	5.5	3.6
12	19	116	81	1,100	496	388	276	75	41	12	5.5	3.6
13	14	96	80	1,170	398	342	268	75	41	11	5.9	3.6
14	13	111	71	592	392	300	244	76	41	9.3	5.5	3.6
15	12	81	73	512	358	257	224	75	41	7.8	5.1	3.6
16	11	83	480	1,820	325	253	216	73	41	7.8	5.1	3.6
17	12	64	1,670	1,050	300	275	329	71	49	7.8	5.1	3.6
18	11	65	1,200	1,400	276	218	240	69	43	7.8	5.1	3.6
19	11	345	1,020	949	248	500	228	64	40	7.8	4.7	8.2
20	10	246	579	752	224	700	196	64	38	7.8	4.7	36
21	10	169	574	930	220	650	182	64	35	7.8	4.7	14
22	10	178	1,580	620	210	600	172	62	31	7.8	4.3	48
23	9.6	123	993	460	200	550	168	62	31	7.3	4.3	193
24	9.3	97	679	460	407	500	158	71	29	7.3	4.7	190
25	8.9	82	455	720	513	462	155	67	30	6.3	5.1	92
26	8.5	68	347	550	541	401	155	61	29	6.3	5.1	35
27	7.8	62	470	400	476	347	149	58	27	5.9	4.7	19
28	9.3	56	342	280	419	316	136	55	25	5.9	4.3	13
29	9.6	49	288	220	------	292	125	53	25	5.9	4.3	9.6
30	9.3	46	256	350	------	622	117	52	25	5.5	4.3	8.1
31	8.9	------	224	600	------	623	------	52	------	5.5	3.9	------
TOTAL	312.9	3,174	12,622	16,912	11,470	12,843	8,206	2,307	1,167	363.6	154.9	731.3
MEAN	10.1	106	407	546	410	414	274	74.4	38.9	11.7	5.00	24.4
MAX	19	345	1,670	1,820	705	700	598	108	50	24	5.9	193
MIN	7.0	13	40	130	200	210	117	52	25	5.5	3.9	3.6
AC-FT	621	6,300	25,040	33,540	22,750	25,470	16,280	4,580	2,310	721	307	1,450

WTR YR 1973 TOTAL 70,263.7 MEAN 193 MAX 1,820 MIN 3.6 AC-FT 139,400

PEAK DISCHARGE (BASE, 1,900 CFS)

DATE	TIME	G.H.	DISCHARGE	DATE	TIME	G.H.	DISCHARGE
12-18	1645	8.84	2,320	1-16	0915	9.35	2,980
12-22	0645	8.68	2,100				

NOTE.--No gage-height record Oct. 1 to Dec. 15.

11482200 REDWOOD CREEK AT SOUTH PARK BOUNDARY, NEAR ORICK, CALIF.

LOCATION.--Lat 41°10'19", long 123°56'55", in SE¼NE¼ sec.16, T.9 N., R.2 E., Humboldt County, Redwood National Park (south boundary), on left bank 150 ft (revised) downstream from Slide Creek, 8.6 miles southeast of Orick, and 17 miles upstream from mouth.

DRAINAGE AREA.--185 sq mi (revised).

GAGE.--Water-stage recorder. Altitude of gage is 240 ft (from topographic map). Prior to Aug. 3, 1973, at different datum.

EXTREMES.--Current year: Maximum discharge, 6,740 cfs Dec. 17 (gage height, 15.92 ft, datum then in use); minimum daily, 9.1 cfs Sept. 12-15.
Period of record: Maximum discharge, 32,600 cfs Mar. 2, 1972 (gage height, 29.36 ft, datum then in use), from rating curve extended above 4,000 cfs on basis of runoff comparisons with upstream and downstream stations; minimum daily, 6.1 cfs Oct. 7-17, 1970.

REMARKS.--Records fair. No regulation or diversion above station. Records of chemical analyses and suspended-sediment discharge for the current year are published in Part 2 of this report.

DISCHARGE, IN CUBIC FEET PER SECOND, WATER YEAR OCTOBER 1972 TO SEPTEMBER 1973

DAY	OCT	NOV	DEC	JAN	FEB	MAR	APR	MAY	JUN	JUL	AUG	SEP
1	26	36	100	651	1,030	1,060	1,850	278	111	46	20	12
2	24	75	94	618	905	1,180	1,500	255	105	44	20	12
3	23	147	94	574	1,050	1,400	1,250	241	99	43	19	11
4	22	486	544	526	1,320	1,120	1,090	246	90	41	18	11
5	21	280	339	493	1,020	1,260	1,030	228	88	40	18	10
6	20	147	387	468	925	1,190	970	204	83	40	17	10
7	19	275	325	449	875	1,100	910	196	79	39	17	10
8	19	172	253	433	920	1,050	855	190	71	39	16	10
9	20	164	208	448	1,630	1,000	822	185	68	38	16	11
10	29	260	192	432	1,400	1,200	782	179	67	37	16	11
11	44	375	172	1,390	1,800	1,450	754	174	64	35	16	9.4
12	56	270	188	2,960	1,500	1,150	722	170	64	35	16	9.1
13	44	194	186	3,500	1,200	1,090	698	165	67	34	16	9.1
14	38	258	166	1,950	1,100	1,040	678	160	64	33	15	9.1
15	33	188	170	1,350	1,100	990	630	155	63	29	14	9.1
16	31	192	1,640	4,200	930	1,010	603	147	64	26	14	9.7
17	33	148	5,500	3,400	850	1,070	650	138	93	25	14	10
18	30	150	3,490	3,700	790	1,030	603	131	94	27	14	11
19	31	802	3,100	3,450	710	1,260	600	123	69	25	14	24
20	28	572	2,190	2,350	660	2,050	551	119	64	25	12	96
21	27	393	1,640	2,400	610	2,000	513	132	62	24	13	68
22	27	414	3,610	1,800	570	1,850	486	129	60	24	13	65
23	26	285	3,080	1,400	590	1,500	465	127	60	24	13	431
24	25	225	2,860	1,400	920	1,400	438	150	59	23	13	218
25	24	190	1,940	1,800	950	1,300	417	156	57	23	15	128
26	23	158	1,480	1,400	1,020	1,210	395	136	56	22	16	60
27	21	145	1,290	1,170	860	1,140	375	129	56	22	16	84
28	25	130	1,100	1,000	1,180	1,070	351	124	52	22	15	67
29	26	115	911	930	------	1,020	325	121	49	21	14	57
30	25	108	801	990	------	1,330	300	115	48	21	14	51
31	24	------	720	1,230	------	1,800	------	114	------	21	13	------
TOTAL	864	7,354	38,770	48,862	28,415	39,320	21,613	5,117	2,126	948	477	1,533.5
MEAN	27.9	245	1,251	1,576	1,015	1,268	720	165	70.9	30.6	15.4	51.1
MAX	56	802	5,500	4,200	1,800	2,050	1,850	278	111	46	20	431
MIN	19	36	94	432	570	990	300	114	48	21	12	9.1
AC-FT	1,710	14,590	76,900	96,920	56,360	77,990	42,870	10,150	4,220	1,880	946	3,040

CAL YR 1972 TOTAL 305,610.0 MEAN 835 MAX 26,500 MIN 14 AC-FT 606,200
WTR YR 1973 TOTAL 195,399.5 MEAN 535 MAX 5,500 MIN 9.1 AC-FT 387,600

PEAK DISCHARGE (BASE, 5,900 CFS).--Dec. 17 (1030) 6,740 cfs (15.92 ft).

11482500 REDWOOD CREEK AT ORICK, CALIF.

LOCATION.--Lat 41°17'18", long 124°03'27", in NE¼NE¼ sec.4, T.10 N., R.1 E., Humboldt County, on left bank at upstream side of bridge on U.S. Highway 101 at Orick, 0.9 mile downstream from Prairie Creek.

DRAINAGE AREA.--278 sq mi.

PERIOD OF RECORD.--September 1911 to September 1913, October 1953 to current year. Monthly discharge only for some periods, published in WSP 1315-B.

GAGE.--Water-stage recorder. Datum of gage is 5.16 ft above mean sea level. Sept. 10, 1911, to Aug. 9, 1913, nonrecording gage at different datum.

AVERAGE DISCHARGE.--22 years, 1,075 cfs (778,800 acre-ft per year).

EXTREMES.--Current year: Maximum discharge, 10,000 cfs Dec. 17 (gage height, 11.67 ft); minimum daily, 12 cfs Sept. 15-17.
Period of record: Maximum discharge, 50,500 cfs Dec. 22, 1964 (gage height, 24.0 ft from outside high-water marks); minimum, 10 cfs Sept. 22-24, 1911.
Flood of Jan. 18, 1953, reached a stage of 23.95 ft, from floodmarks (discharge, 50,000 cfs).

REMARKS.--Records good. No regulation or diversion above station. Records of water temperatures and suspended-sediment discharge for the current year are published in Part 2 of this report.

REVISIONS (WATER YEARS).--WSP 1315-B: 1912-13.

DISCHARGE, IN CUBIC FEET PER SECOND, WATER YEAR OCTOBER 1972 TO SEPTEMBER 1973

DAY	OCT	NOV	DEC	JAN	FEB	MAR	APR	MAY	JUN	JUL	AUG	SEP
1	30	29	168	850	1,500	1,670	2,740	356	142	61	27	17
2	28	66	159	800	1,310	1,460	2,260	338	136	60	26	16
3	25	154	233	730	1,170	1,680	1,880	325	131	58	25	15
4	24	421	700	665	1,100	1,880	1,640	361	125	58	24	15
5	23	332	580	620	2,260	1,530	1,490	352	120	56	23	14
6	22	197	610	600	1,620	1,610	1,390	312	114	56	23	14
7	21	304	520	580	1,320	1,370	1,260	300	108	54	23	14
8	19	239	440	560	1,140	1,240	1,170	288	105	53	23	14
9	19	194	360	533	1,100	1,130	1,070	280	103	53	23	14
10	26	280	310	759	2,400	1,600	992	264	101	51	23	14
11	51	430	250	2,090	2,480	2,180	920	252	99	50	23	13
12	98	367	290	4,490	2,550	1,700	872	244	99	50	22	13
13	66	292	280	5,330	1,920	1,480	816	233	103	48	22	13
14	50	300	240	2,940	1,790	1,280	779	226	101	47	22	13
15	41	280	250	2,090	1,620	1,150	723	219	96	46	21	12
16	37	260	1,220	6,410	1,410	1,210	684	209	96	44	20	12
17	34	239	8,040	5,220	1,260	1,560	872	202	117	43	19	12
18	33	236	5,190	5,710	1,140	1,340	800	195	125	42	19	13
19	31	760	4,970	5,160	1,060	2,560	744	188	105	42	18	33
20	31	635	3,360	3,580	978	3,160	660	188	96	42	18	167
21	28	427	2,540	3,680	912	3,100	604	177	90	40	17	134
22	26	447	6,220	2,720	840	2,800	548	174	85	40	17	114
23	26	357	5,150	2,130	786	2,320	514	170	85	38	17	555
24	26	295	5,280	2,130	832	2,120	484	240	83	37	17	472
25	24	251	2,840	2,760	1,280	2,020	460	264	79	36	19	420
26	24	221	1,940	2,070	1,360	1,850	450	205	77	35	20	212
27	22	201	1,890	1,740	1,430	1,640	435	181	72	33	20	139
28	24	202	1,690	1,510	1,180	1,480	420	167	70	32	19	105
29	30	196	1,320	1,440	------	1,310	397	162	67	30	18	88
30	29	180	1,130	1,530	------	2,040	374	153	65	29	17	72
31	27	------	950	1,920	------	2,720	------	150	------	28	17	------
TOTAL	995	8,792	59,120	73,347	39,748	56,190	28,448	7,375	2,995	1,392	642	2,759
MEAN	32.1	293	1,907	2,366	1,420	1,813	948	238	99.8	44.9	20.7	92.0
MAX	98	760	8,040	6,410	2,550	3,160	2,740	361	142	61	27	555
MIN	19	29	159	533	786	1,130	374	150	65	28	17	12
AC-FT	1,970	17,440	117,300	145,500	78,840	111,500	56,430	14,630	5,940	2,760	1,270	5,470

CAL YR 1972 TOTAL 457,962 MEAN 1,251 MAX 40,100 MIN 16 AC-FT 908,400
WTR YR 1973 TOTAL 281,803 MEAN 772 MAX 8,040 MIN 12 AC-FT 559,000

PEAK DISCHARGE (BASE, 9,000 CFS).--Dec. 17 (1415) 10,000 cfs (11.67 ft).

11489500 ANTELOPE CREEK NEAR TENNANT, CALIF.

LOCATION.--Lat 41°32'48", long 121°55'02", in NW¼NW¼ sec.25, T.43 N., R.1 W., Siskiyou County, Shasta National Forest, on right bank 2.5 miles south of Tennant, 4 miles downstream from Frog Lake, and 17 miles southeast of town of Mount Hebron.

DRAINAGE AREA.--18.6 sq mi.

PERIOD OF RECORD.--May 1952 to current year.

GAGE.--Water-stage recorder and concrete control. Altitude of gage is 5,080 ft (from topographic map).

AVERAGE DISCHARGE.--21 years, 36.2 cfs (26,230 acre-ft per year).

EXTREMES.--Current year: Maximum discharge, 191 cfs May 18 (gage height, 2.86 ft); maximum gage height, 4.24 ft Dec. 18 (backwater from ice); minimum daily discharge, 5.1 cfs Dec. 9.
Period of record: Maximum discharge, 1,170 cfs Jan. 23, 1970 (gage height, 4.93 ft), from rating curve extended above 240 cfs on basis of slope-area measurement at gage height 4.00 ft; minimum daily, 3.6 cfs Jan. 5, 1960.

REMARKS.--Records excellent except those for the winter period, which are fair. No storage or diversion above station.

REVISIONS.--WSP 1929: Drainage area.

DISCHARGE, IN CUBIC FEET PER SECOND, WATER YEAR OCTOBER 1972 TO SEPTEMBER 1973

DAY	OCT	NOV	DEC	JAN	FEB	MAR	APR	MAY	JUN	JUL	AUG	SEP
1	12	14	15	34	20	20	16	69	81	21	13	11
2	12	14	15	34	19	19	16	71	72	21	13	11
3	11	29	14	22	19	19	17	72	67	20	13	11
4	11	26	11	24	19	18	18	70	62	19	13	11
5	11	19	8.9	26	20	17	20	68	60	19	13	11
6	11	17	9.4	28	19	18	22	71	61	19	13	11
7	11	17	9.3	26	19	17	23	76	60	18	12	11
8	11	17	6.1	25	19	17	23	80	58	18	12	11
9	13	16	5.1	24	19	17	25	80	56	17	12	11
10	30	17	5.9	24	19	19	27	81	51	17	12	11
11	54	17	6.3	24	19	18	30	84	48	17	12	11
12	29	16	6.7	25	18	17	33	91	47	18	12	11
13	19	17	7.1	26	17	17	33	103	45	17	12	11
14	23	17	7.5	29	17	17	33	123	42	16	12	11
15	23	16	8.2	26	17	17	34	149	38	16	12	11
16	19	16	9.2	23	17	17	36	159	36	16	12	11
17	18	16	11	25	17	17	37	165	34	16	12	11
18	18	16	13	21	18	17	34	171	32	16	12	11
19	16	15	17	24	17	17	31	169	31	15	11	16
20	16	15	30	29	17	17	32	146	30	15	11	16
21	15	15	31	24	17	16	35	123	29	15	11	13
22	15	15	34	25	17	16	40	114	29	15	11	14
23	14	15	36	27	17	17	43	112	28	15	11	14
24	14	15	32	24	17	17	47	139	27	15	12	13
25	14	15	30	23	19	18	51	126	26	14	13	13
26	14	16	28	23	21	18	58	102	25	14	12	12
27	14	16	27	31	21	18	68	93	25	14	12	12
28	14	16	26	21	21	17	74	91	24	14	12	11
29	14	16	34	20	------	17	72	91	23	14	11	11
30	16	15	32	19	------	17	69	93	22	13	11	11
31	14	------	22	19	------	17	------	91	------	13	11	------
TOTAL	526	501	547.7	775	516	540	1,097	3,273	1,269	507	371	354
MEAN	17.0	16.7	17.7	25.0	18.4	17.4	36.6	106	42.3	16.4	12.0	11.8
MAX	54	29	36	34	21	20	74	171	81	21	13	16
MIN	11	14	5.1	19	17	16	16	68	22	13	11	11
AC-FT	1,040	994	1,090	1,540	1,020	1,070	2,180	6,490	2,520	1,010	736	702

CAL YR 1972 TOTAL 10,601.7 MEAN 29.0 MAX 123 MIN 5.1 AC-FT 21,030
WTR YR 1973 TOTAL 10,276.7 MEAN 28.2 MAX 171 MIN 5.1 AC-FT 20,380

PEAK DISCHARGE (BASE, 100 CFS).--May 18 (2200) 191 cfs (2.86 ft); May 24 (2100) 172 cfs (2.77 ft).

11510700 KLAMATH RIVER BELOW JOHN C. BOYLE POWERPLANT, NEAR KENO, OREG.

LOCATION.--Lat 42°05'05", long 122°04'20", in SE¼SE¼ sec.14, T.40 S., R.6 E., Klamath County, on right bank 0.7 mile downstream from John C. Boyle powerplant, 8 miles downstream from Spencer Creek, and 8.5 miles southwest of Keno.

DRAINAGE AREA.--4,080 sq mi, approximately (not including Lost River or Lower Klamath Lake basins).

PERIOD OF RECORD.--January 1959 to current year. Prior to Oct. 1, 1961, published as "below Big Bend powerplant."

GAGE.--Water-stage recorder. Datum of gage is 3,274.82 ft above mean sea level (levels by Pacific Power and Light Co.).

AVERAGE DISCHARGE.--14 years, 1,864 cfs (1,350,000 acre-ft per year). 13 years, 1,884 cfs (1,365,000 acre-ft per year); figure published in Water Resources Data for Calif., 1972, in error.

EXTREMES.--Current year: Maximum discharge, 4,700 cfs Dec. 23 (gage height, 6.91 ft); minimum, 312 cfs Aug. 16, Aug. 17; minimum daily, 351 cfs Aug. 25.
Period of record: Maximum discharge, 11,000 cfs Mar. 5, 1972 (gage height, 9.33 ft); minimum, 283 cfs Feb. 17, 1968; minimum daily, 317 cfs July 25, 1968.

REMARKS.--Records excellent. Flow regulated by Upper Klamath Lake (see sta 11507000). Large diurnal fluctuation caused by John C. Boyle powerplant and 2 powerplants below Upper Klamath Lake. Diversions for irrigation above station.

DISCHARGE, IN CUBIC FEET PER SECOND, WATER YEAR OCTOBER 1972 TO SEPTEMBER 1973

DAY	OCT	NOV	DEC	JAN	FEB	MAR	APR	MAY	JUN	JUL	AUG	SEP
1	1,600	1,750	2,820	3,160	2,710	2,260	1,400	808	1,030	575	630	610
2	1,600	2,280	2,800	2,990	2,710	2,300	1,360	827	983	625	365	620
3	1,700	2,170	2,820	2,810	2,710	2,630	1,290	760	885	625	625	620
4	1,800	1,860	2,810	2,800	2,700	2,700	1,260	853	673	358	365	1,060
5	1,860	1,860	2,840	2,800	2,710	2,590	1,300	808	570	678	358	1,070
6	1,860	2,220	2,870	2,800	2,730	2,590	1,140	802	625	706	635	1,040
7	1,540	2,220	2,870	2,810	2,430	2,590	1,140	808	667	536	361	1,060
8	1,540	2,380	2,870	2,800	2,250	2,200	969	766	625	536	630	662
9	1,920	2,460	2,880	2,770	2,290	2,170	1,090	808	580	509	361	662
10	1,920	2,780	2,880	2,800	2,250	2,470	1,160	760	580	500	760	1,060
11	1,870	2,500	2,870	2,800	2,290	2,020	1,160	760	580	473	361	1,070
12	1,810	2,480	2,870	2,800	2,070	2,710	1,120	760	754	482	358	1,060
13	1,760	2,480	2,870	3,110	2,410	2,770	1,170	766	754	478	766	625
14	1,550	2,770	2,870	3,340	2,390	2,730	1,160	724	754	460	625	754
15	1,540	2,850	2,870	3,230	2,210	2,460	1,110	736	748	473	630	667
16	1,860	2,850	2,880	3,230	2,280	2,190	1,150	784	620	491	742	358
17	1,540	2,850	2,880	3,250	2,260	2,220	1,110	784	684	491	730	808
18	1,900	2,850	2,880	3,220	2,260	2,210	1,120	748	625	478	615	766
19	1,550	2,850	2,730	3,220	2,260	2,030	1,150	859	620	491	354	718
20	2,020	2,850	2,820	3,190	2,250	1,370	1,090	678	575	482	748	712
21	1,550	2,910	2,990	3,170	2,250	1,400	1,060	808	630	482	667	948
22	1,540	3,230	3,520	3,190	2,280	1,350	427	899	620	482	662	899
23	1,860	3,220	3,820	3,070	2,290	1,370	1,320	899	625	482	575	361
24	1,540	3,230	4,140	2,940	2,260	1,340	1,090	899	580	482	570	814
25	1,540	3,230	4,090	2,890	2,250	1,370	1,020	892	625	439	351	760
26	1,540	3,220	4,040	2,670	2,260	1,360	941	892	625	358	354	718
27	1,540	3,170	4,090	2,680	2,300	1,370	962	846	580	645	1,050	724
28	1,550	3,050	3,840	2,730	2,300	1,400	853	892	625	361	724	712
29	1,550	2,950	3,500	2,700	------	1,400	846	790	625	372	700	718
30	1,790	2,780	3,170	2,700	------	1,400	802	840	625	630	754	625
31	1,470	------	3,160	2,700	------	1,400	------	976	------	365	879	------
TOTAL	52,210	80,300	97,360	91,370	66,360	62,370	32,770	25,232	20,092	15,545	18,305	23,281
MEAN	1,684	2,677	3,141	2,947	2,370	2,012	1,092	814	670	501	590	776
MAX	2,020	3,230	4,140	3,340	2,730	2,770	1,400	976	1,030	706	1,050	1,070
MIN	1,470	1,750	2,730	2,670	2,070	1,340	427	678	570	358	351	358
AC-FT	103,600	159,300	193,100	181,200	131,600	123,700	65,000	50,050	39,850	30,830	36,310	46,180

CAL YR 1972 TOTAL 953,088 MEAN 2,604 MAX 10,800 MIN 391 AC-FT 1,890,000
WTR YR 1973 TOTAL 585,195 MEAN 1,603 MAX 4,140 MIN 351 AC-FT 1,161,000

RESERVOIRS IN KLAMATH RIVER BASIN, CALIF.

11511400 COPCO LAKE NEAR COPCO.--Lat 41°58'46", long 122°20'00", in SE¼SW¼ sec.29, T.48 N., R.4 W., Siskiyou County, 12.7 miles northeast of Hornbrook. Drainage area, 4,300 sq mi. Period of record, October 1967 to current year. Gage is a pressure device and telemark read once daily. Datum of gage is at mean sea level (levels by Pacific Power and Light Co.). Extremes for current year: Maximum contents, 46,422 acre-ft July 3 (elevation, 2,607.05 ft); minimum, 37,139 acre-ft Aug. 10 (elevation, 2,597.17 ft). Extremes for period of record: Maximum contents, 46,818 acre-ft June 24, 1969 (elevation, 2,607.45 ft); minimum, 30,360 acre-ft Aug. 19, 1971 (elevation, 2,589.24 ft).

Reservoir is formed by gravity-type dam completed in 1922. Normal capacity at elevation 2,607.5 ft is 46,867 acre-ft. Records, including extremes, represent contents at 0800 hours. Records of contents furnished by Pacific Power and Light Co.

11516510 IRON GATE RESERVOIR NEAR HORNBROOK.--Lat 41°55'58", long 122°26'06", in SW¼SW¼ sec.9, T.47 N., R.5 W., Siskiyou County, 6.6 miles northeast of Hornbrook. Drainage area, 4,573 sq mi. Period of record, October 1967 to current year. Gage is a pressure device and telemark read once daily. Datum of gage is at mean sea level (levels by Pacific Power and Light Co.). Extremes for current year: Maximum contents, 59,754 acre-ft Dec. 24 (elevation, 2,328.97 ft); minimum, 54,294 acre-ft Apr. 23 (elevation, 2,323.22 ft). Extremes for period of record: Maximum contents, 61,776 acre-ft Mar. 3, 1972 (elevation, 2,330.96 ft); minimum, 50,103 acre-ft Dec. 9, 1968 (elevation, 2,318.40 ft).

Reservoir is formed by earthfill and rockfill dam completed in 1962. Capacity is 58,794 acre-ft at elevation 2,328.0 ft (crest of spillway). Records, including extremes, represent contents at 0800 hours. Records of contents furnished by Pacific Power and Light Co.

MONTHEND ELEVATION AND CONTENTS, WATER YEAR OCTOBER 1972 TO SEPTEMBER 1973

Date	Elevation (feet)a	Contents (acre-feet)	Change in contents (acre-feet)	Elevation (feet)a	Contents (acre-feet)	Change in contents (acre-feet)
	Copco Lake			Iron Gate Reservoir		
Oct. 31	2,604.15	43,602	+173	2,325.44	56,341	+930
Nov. 30	2,603.88	43,344	-258	2,328.48	59,269	+2,928
Dec. 31	2,603.36	42,849	-495	2,328.51	59,299	+30
CAL YR 1972	--	--	-390	--	--	-79
Jan. 31	2,604.38	43,823	+974	2,328.47	59,259	-40
Feb. 28	2,606.49	45,871	+2,048	2,328.32	59,111	-148
Mar. 31	2,605.79	45,186	-685	2,324.32	55,300	-3,811
Apr. 30	2,603.83	43,296	-1,890	2,325.02	55,947	+647
May 31	2,603.21	42,707	-589	2,325.12	56,041	+94
June 30	2,606.68	46,058	+3,351	2,326.46	57,306	+1,265
July 31	2,601.15	40,772	-5,286	2,325.39	56,294	-1,012
Aug. 31	2,598.00	37,884	-2,888	2,325.15	56,069	-225
Sept. 30	2,606.99	46,362	+8,478	2,326.78	57,612	+1,543
WTR YR 1973	--	--	+2,933	--	--	+2,201

a Elevation at 0800.

11516530 KLAMATH RIVER BELOW IRON GATE DAM, CALIF.

LOCATION.--Lat 41°55'41", long 122°26'35", in SE¼NE¼ sec.17, T.47 N., R.5 W., Siskiyou County, on left bank 0.1 mile downstream from Bogus Creek, 0.6 mile downstream from Iron Gate Dam, and 5.9 miles northeast of Hornbrook.

DRAINAGE AREA.--4,630 sq mi, approximately (not including Lost River and Lower Klamath Lake basins).

PERIOD OF RECORD.--October 1960 to current year.

GAGE.--Water-stage recorder. Datum of gage is 2,162.44 ft above mean sea level (levels by Pacific Power and Light Co.).

AVERAGE DISCHARGE.--13 years, 2,249 cfs (1,629,000 acre-ft per year).

EXTREMES.--Current year: Maximum discharge, 4,790 cfs Dec. 24 (gage height, 6.32 ft); minimum daily, 665 cfs July 31, Aug. 2, 3.
Period of record: Maximum discharge, 29,400 cfs Dec. 22, 1964 (gage height, 13.63 ft), from rating curve extended above 15,000 cfs on basis of slope-area measurement of maximum flow; minimum daily, 647 cfs Oct. 30, Nov. 6, 1960, Sept. 24, Oct. 1, 1961.

REMARKS.--Records excellent. Flow regulated by Upper Klamath Lake (capacity, 584,000 acre-ft), other smaller reservoirs, and diversions above station. Iron Gate Dam 0.6 mile upstream is a re-regulating reservoir (see sta 11516510). Records of chemical analyses and water temperatures for the current year are published in Part 2 of this report.

DISCHARGE, IN CUBIC FEET PER SECOND, WATER YEAR OCTOBER 1972 TO SEPTEMBER 1973

DAY	OCT	NOV	DEC	JAN	FEB	MAR	APR	MAY	JUN	JUL	AUG	SEP
1	1,790	1,810	3,000	3,210	3,040	2,700	1,640	1,120	760	745	670	720
2	1,790	2,170	3,000	3,250	3,030	2,650	1,650	1,090	725	745	665	725
3	1,790	2,220	3,090	3,180	2,940	2,730	1,620	1,060	725	740	665	725
4	1,790	1,810	3,060	3,020	3,000	3,060	1,620	1,030	730	735	670	730
5	1,790	1,810	3,200	3,030	3,140	3,020	1,510	1,030	745	740	670	720
6	1,790	1,800	2,970	3,020	2,960	2,820	1,380	1,030	745	735	670	720
7	1,790	2,290	3,060	3,020	2,670	2,980	1,380	1,030	745	745	675	720
8	1,790	2,800	2,970	3,100	2,650	2,940	1,380	1,030	755	735	670	720
9	1,800	2,850	2,960	2,980	2,630	2,680	1,380	1,030	745	740	670	715
10	1,800	2,840	2,490	3,020	2,600	2,680	1,380	1,030	750	745	675	715
11	1,800	2,830	2,910	3,090	2,580	2,370	1,380	1,030	750	735	670	715
12	1,800	2,850	3,200	3,270	2,570	2,550	1,390	1,030	745	725	670	730
13	1,800	2,850	2,900	3,620	2,640	2,990	1,390	1,030	745	705	694	725
14	1,800	3,020	2,930	3,990	2,630	3,060	1,390	1,030	750	700	740	730
15	1,800	3,040	3,230	3,650	2,640	3,030	1,380	1,030	750	700	730	730
16	1,800	3,050	3,170	4,100	2,580	2,920	1,390	1,030	745	695	725	725
17	1,780	3,060	3,340	3,880	2,560	2,630	1,380	1,020	745	700	725	720
18	1,790	3,050	3,100	3,670	2,580	2,580	1,380	1,020	745	695	725	720
19	1,780	3,060	3,240	3,650	2,580	2,530	1,380	1,020	750	695	720	730
20	1,780	3,060	3,040	3,620	2,420	2,300	1,380	1,020	750	685	720	730
21	1,780	3,060	3,350	3,630	2,380	1,820	1,380	1,020	745	685	720	725
22	1,780	3,090	4,140	3,550	2,410	1,820	1,380	1,030	750	690	720	725
23	1,790	3,270	4,440	3,450	2,440	1,820	1,360	1,030	755	680	720	725
24	1,780	3,300	4,680	3,210	2,520	1,810	1,360	1,040	755	680	725	725
25	1,790	3,320	4,420	3,170	2,640	1,810	1,370	1,030	750	675	720	725
26	1,790	3,320	4,410	2,900	2,450	1,690	1,380	1,030	745	675	715	720
27	1,790	3,480	4,390	2,760	2,530	1,660	1,380	1,020	745	675	715	715
28	1,790	3,380	4,300	2,960	2,650	1,650	1,380	1,020	745	675	715	715
29	1,790	3,320	3,670	3,020	------	1,640	1,380	1,020	745	670	715	715
30	1,790	2,990	3,210	2,990	------	1,640	1,380	1,030	740	670	715	805
31	1,800	------	3,200	3,050	------	1,640	------	1,030	------	665	720	------
TOTAL	55,520	84,800	105,070	102,060	74,460	74,220	42,530	32,040	22,375	21,880	21,719	21,760
MEAN	1,791	2,827	3,389	3,292	2,659	2,394	1,418	1,034	746	706	701	725
MAX	1,800	3,480	4,680	4,100	3,140	3,060	1,650	1,120	760	745	740	805
MIN	1,780	1,800	2,490	2,760	2,380	1,640	1,360	1,020	725	665	665	715
AC-FT	110,100	168,200	208,400	202,400	147,700	147,200	84,360	63,550	44,380	43,400	43,080	43,160

CAL YR 1972 TOTAL 1,124,315 MEAN 3,072 MAX 16,200 MIN 690 AC-FT 2,230,000
WTR YR 1973 TOTAL 658,434 MEAN 1,804 MAX 4,680 MIN 665 AC-FT 1,306,000

11516900 LITTLE SHASTA RIVER NEAR MONTAGUE, CALIF.

LOCATION.--Lat 41°45'11", long 122°17'42", in NW¼NW¼ sec.15, T.45 N., R.4 W., Siskiyou County, on right bank 0.5 mile downstream from Dry Creek, and 12 miles east of Montague.

DRAINAGE AREA.--48.2 sq mi.

PERIOD OF RECORD.--October 1957 to current year.

GAGE.--Water-stage recorder. Altitude of gage is 3,360 ft (from topographic map). Prior to May 27, 1965, water-stage recorder at site 0.2 mile downstream at different datum.

AVERAGE DISCHARGE.--16 years, 19.3 cfs (13,980 acre-ft per year).

EXTREMES.--Current year: Maximum discharge, 53 cfs Dec. 18 (gage height, 1.78 ft); minimum daily, 3.2 cfs Aug. 28-30.
Period of record: Maximum discharge, 5,910 cfs Dec. 22, 1964 (gage height, 12.2 ft, present site and datum), from slope-area measurement of maximum flow; minimum daily, 0.60 cfs Jan. 4, 1966.

REMARKS.--No known diversion or regulation above station.

COOPERATION.--Records furnished by California Department of Water Resources and reviewed by Geological Survey.

DISCHARGE, IN CUBIC FEET PER SECOND, WATER YEAR OCTOBER 1972 TO SEPTEMBER 1973

DAY	OCT	NOV	DEC	JAN	FEB	MAR	APR	MAY	JUN	JUL	AUG	SEP
1	8.0	8.5	6.7	5.4	7.2	14	17	26	13	5.3	3.6	3.5
2	7.8	8.2	6.7	5.4	6.4	12	15	25	12	5.1	3.5	3.5
3	7.5	8.7	6.2	5.4	6.6	12	16	25	11	5.0	3.5	3.5
4	7.3	11	6.5	5.4	6.9	11	19	26	11	5.0	3.6	3.4
5	7.2	9.2	6.7	5.4	10	9.7	24	25	10	4.9	3.5	3.4
6	7.1	7.7	6.7	5.4	11	11	27	24	9.7	4.9	3.4	3.4
7	7.1	8.4	7.0	5.4	12	9.7	26	23	9.3	4.8	3.5	3.5
8	7.2	8.5	7.0	5.4	12	9.5	25	22	9.0	4.7	3.4	3.5
9	8.4	7.9	7.0	6.0	12	10	27	22	8.8	4.6	3.5	3.5
10	8.0	7.6	7.2	6.2	12	17	28	21	8.6	4.5	3.5	3.4
11	9.9	8.1	7.5	7.2	11	16	30	20	8.3	4.5	3.5	3.4
12	8.8	7.7	7.8	11	9.6	13	31	20	8.2	4.7	3.5	3.4
13	8.3	7.5	7.8	27	8.5	12	32	20	8.2	4.3	3.5	3.4
14	8.6	7.5	7.8	20	8.5	11	26	21	8.1	4.2	3.4	3.5
15	8.7	7.2	7.8	15	8.3	12	26	21	7.8	4.1	3.4	3.5
16	9.2	7.7	8.0	20	8.4	13	27	20	7.7	4.9	3.3	3.5
17	8.8	6.9	15	16	9.0	13	31	19	7.6	5.6	3.4	3.5
18	8.4	7.2	22	12	8.3	15	24	18	7.3	4.5	3.4	3.6
19	8.2	7.7	31	9.6	7.7	16	22	17	7.0	4.4	3.3	6.1
20	8.0	7.5	21	9.2	8.2	14	20	16	6.6	4.4	3.3	5.6
21	7.8	7.3	28	10	8.6	14	21	16	6.3	4.3	3.3	4.3
22	7.8	7.2	32	7.5	9.1	15	24	15	6.2	4.2	3.3	4.6
23	7.8	6.7	16	12	9.4	15	26	15	6.3	4.0	3.3	5.5
24	7.5	6.9	15	9.8	11	16	28	19	6.1	3.9	3.5	7.2
25	7.5	6.9	9.1	8.0	12	18	30	18	5.9	3.8	3.7	5.6
26	7.5	11	8.0	6.7	13	19	32	15	5.7	3.7	3.5	3.9
27	7.4	9.7	7.0	6.7	12	18	36	14	5.6	3.7	3.3	3.7
28	7.7	8.2	6.2	6.7	14	15	31	13	5.6	3.8	3.2	3.5
29	7.8	7.4	5.4	6.7	------	14	29	12	5.5	3.7	3.2	3.4
30	7.1	6.7	5.4	7.0	------	15	27	13	5.4	3.7	3.2	3.4
31	7.4	------	5.4	6.7	------	17	------	15	------	3.6	3.3	------
TOTAL	245.8	238.7	340.9	290.2	272.7	426.9	777	596	237.8	136.8	105.8	119.2
MEAN	7.93	7.96	11.0	9.36	9.74	13.8	25.9	19.2	7.93	4.41	3.41	3.97
MAX	9.9	11	32	27	14	19	36	26	13	5.6	3.7	7.2
MIN	7.1	6.7	5.4	5.4	6.4	9.5	15	12	5.4	3.6	3.2	3.4
AC-FT	488	473	676	576	541	847	1,540	1,180	472	271	210	236

CAL YR 1972 TOTAL 13,897.8 MEAN 38.0 MAX 300 MIN 5.4 AC-FT 27,570
WTR YR 1973 TOTAL 3,787.8 MEAN 10.4 MAX 36 MIN 3.2 AC-FT 7,510

11517500 SHASTA RIVER NEAR YREKA, CALIF.

LOCATION.--Lat 41°49'23", long 122°35'40", in SE¼NE¼ sec.24, T.46 N., R.7 W., Siskiyou County, on right bank 0.5 mile upstream from mouth, and 7 miles north of Yreka.

DRAINAGE AREA.--793 sq mi.

PERIOD OF RECORD.--October 1933 to December 1941, December 1944 to current year.

GAGE.--Water-stage recorder. Altitude of gage is 2,000 ft (from topographic map). Prior to Nov. 2, 1933, nonrecording gage at same site and datum.

AVERAGE DISCHARGE.--36 years, 183 cfs (132,600 acre-ft per year).

EXTREMES.--Current year: Maximum discharge, 344 cfs Dec. 19 (gage height, 3.82 ft); minimum daily, 5.7 cfs Aug. 4.
Period of record: Maximum discharge, 21,500 cfs Dec. 22, 1964 (gage height, 12.92 ft in gage well, 13.85 ft, from floodmarks), from rating curve extended above 4,100 cfs on basis of slope-area measurement of maximum flow; minimum, 3.4 cfs Aug. 13, 1939, when about 2 cfs was being diverted around gage.

REMARKS.--Records good. Flow partly regulated by Lake Dwinnell beginning in 1928; storage limited to 50,000 acre-ft. Many diversions above station for irrigation. Records of chemical analyses and water temperatures for the current year are published in Part 2 of this report.

REVISIONS.--WSP 1929: Drainage area.

DISCHARGE, IN CUBIC FEET PER SECOND, WATER YEAR OCTOBER 1972 TO SEPTEMBER 1973

DAY	OCT	NOV	DEC	JAN	FEB	MAR	APR	MAY	JUN	JUL	AUG	SEP
1	156	172	187	220	198	226	78	101	52	15	25	14
2	149	176	187	212	199	214	72	88	68	18	13	14
3	106	179	191	209	201	202	84	69	52	15	9.4	21
4	113	190	198	202	199	197	90	65	32	15	5.7	23
5	113	191	189	192	224	214	88	84	27	15	17	22
6	106	180	187	191	224	218	82	82	26	11	21	21
7	101	180	189	189	227	212	82	78	25	12	15	23
8	104	186	192	187	226	205	78	69	25	17	9.0	24
9	110	187	190	186	227	205	76	51	27	21	17	23
10	123	183	185	192	227	203	52	51	24	19	21	26
11	132	184	179	230	233	206	49	49	27	18	22	30
12	157	183	181	270	226	204	49	45	27	16	26	31
13	173	181	179	262	216	206	84	44	30	16	23	29
14	156	178	168	250	210	206	90	60	30	14	21	25
15	166	179	168	239	208	203	113	110	35	9.7	14	25
16	170	185	182	265	205	198	99	90	41	11	8.7	20
17	167	199	242	284	208	197	90	88	30	9.9	9.9	19
18	175	191	265	266	205	207	99	78	27	17	12	22
19	176	191	322	288	200	202	74	66	29	25	14	28
20	167	190	301	268	200	187	65	61	22	39	14	110
21	167	189	279	261	199	217	74	71	18	53	12	125
22	170	191	319	262	198	197	78	59	14	40	12	110
23	176	192	290	247	195	170	62	54	22	26	9.3	109
24	167	192	283	233	194	155	70	55	19	24	8.9	122
25	165	191	259	228	226	160	64	63	23	22	12	120
26	172	191	243	221	251	138	51	66	22	15	22	100
27	176	191	238	212	216	67	55	43	24	15	25	90
28	173	190	240	210	221	76	60	47	18	20	18	109
29	175	188	229	207	------	70	74	48	13	19	22	109
30	174	187	223	203	------	78	90	40	14	21	19	118
31	171	------	229	202	------	84	------	53	------	29	19	------
TOTAL	4,706	5,587	6,914	7,088	5,963	5,524	2,272	2,028	843	617.6	496.9	1,662
MEAN	152	186	223	229	213	178	75.7	65.4	28.1	19.9	16.0	55.4
MAX	176	199	322	288	251	226	113	110	68	53	26	125
MIN	101	172	168	186	194	67	49	40	13	9.7	5.7	14
AC-FT	9,330	11,080	13,710	14,060	11,830	10,960	4,510	4,020	1,670	1,230	986	3,300

CAL YR 1972 TOTAL 75,945.0 MEAN 208 MAX 2,280 MIN 15 AC-FT 150,600
WTR YR 1973 TOTAL 43,701.5 MEAN 120 MAX 322 MIN 5.7 AC-FT 86,680

PEAK DISCHARGE (BASE, 400 CFS).--No peak above base.

11517900 EAST FORK SCOTT RIVER BELOW HOUSTON CREEK, NEAR CALLAHAN, CALIF.

LOCATION.--Lat 41°24'06", long 122°39'08", in SE¼NE¼ sec.16, T.41 N., R.7 W., Siskiyou County, on right bank 1,200 ft downstream from Houston Creek, and 9.9 miles northeast of Callahan.

DRAINAGE AREA.--19.7 sq mi.

PERIOD OF RECORD.--September 1970 to July 1973 (discontinued).

GAGE.--Water-stage recorder. Datum of gage is 4,170.84 ft above mean sea level.

EXTREMES.--Current year: Maximum discharge during period October 1972 to July 1973, 121 cfs May 15 (gage height, 2.84 ft); minimum daily, 2.3 cfs Oct. 3-8.
Period of record: Maximum discharge, 222 cfs Jan. 18, 1971 (gage height, 3.40 ft); minimum daily, 1.2 cfs Sept. 28-30, Oct. 1-3, 1970.

REMARKS.--Records excellent except those for the winter period, which are fair. Some diversion for irrigation.

DISCHARGE, IN CUBIC FEET PER SECOND, OCTOBER 1972 TO JULY 1973

DAY	OCT	NOV	DEC	JAN	FEB	MAR	APR	MAY	JUN	JUL	AUG	SEP
1	2.5	2.7	5.4	8.6	6.3	15	10	52	30	7.5		
2	2.5	3.0	5.0	8.5	6.1	13	9.5	55	25	7.0		
3	2.3	4.6	5.8	8.2	6.1	13	9.5	55	24	7.0		
4	2.3	6.6	4.5	8.6	6.5	12	10	49	22	6.5		
5	2.3	4.2	4.4	8.0	7.0	11	13	39	21	6.5		
6	2.3	3.4	4.6	8.2	7.0	11	17	42	21	6.1		
7	2.3	3.4	4.9	9.0	7.0	10	23	44	21	--		
8	2.3	3.4	4.9	10	7.5	10	26	48	20	--		
9	2.5	3.2	4.6	9.0	7.5	10	30	47	20	--		
10	3.0	3.2	5.0	8.0	8.5	10	33	47	18	--		
11	5.4	3.2	5.3	6.5	8.0	10	36	51	16	--		
12	5.4	3.2	5.2	9.0	8.0	10	39	61	15	--		
13	3.2	3.2	5.0	13	7.5	9.5	40	76	15	--		
14	4.2	3.4	4.7	12	7.5	9.0	34	96	15	--		
15	4.6	3.8	4.4	12	7.5	9.0	33	102	14	--		
16	4.2	5.4	4.1	21	7.0	9.5	33	92	13	--		
17	3.2	4.2	6.1	15	7.0	9.5	33	91	13	--		
18	3.2	4.2	11	13	7.0	9.0	29	91	12	--		
19	3.0	4.6	17	11	7.0	9.0	25	79	11	--		
20	2.7	4.2	14	11	7.0	9.5	24	62	10	--		
21	2.7	4.6	22	10	7.0	9.0	25	52	10	--		
22	2.7	4.6	31	9.0	7.5	8.5	30	48	9.5	--		
23	2.7	4.2	20	8.7	7.5	8.5	37	46	9.5	--		
24	2.7	4.6	16	8.0	14	9.0	46	48	9.5	--		
25	2.5	4.2	14	8.0	18	10	53	43	9.0	--		
26	2.5	6.2	12	7.8	17	10	67	34	9.0	--		
27	2.5	7.8	12	7.4	17	10	87	31	8.5	--		
28	2.5	6.6	10	7.0	16	11	80	32	8.0	--		
29	2.5	6.2	10	7.0	------	10	67	34	8.0	--		
30	2.5	5.4	10	6.5	------	10	57	35	7.5	--		
31	2.7	------	8.6	6.4	------	10	------	33	------	--		------
TOTAL	91.9	131.5	291.5	295.4	247.0	315.0	1,056.0	1,715	444.5	--		
MEAN	2.96	4.38	9.40	9.53	8.82	10.2	35.2	55.3	14.8	--		
MAX	5.4	7.8	31	21	18	15	87	102	30	--		
MIN	2.3	2.7	4.1	6.4	6.1	8.5	9.5	31	7.5	--		
AC-FT	182	261	578	586	490	625	2,090	3,400	882	--		

CAL YR 1972 TOTAL 6,890.9 MEAN 18.8 MAX 116 MIN 2.3 AC-FT 13,670

PEAK DISCHARGE (BASE, 100 CFS).--Apr. 27 (1900) 102 cfs (2.74 ft); May 15 (1730) 121 cfs (2.84 ft).

11517950 EAST FORK SCOTT RIVER ABOVE KANGAROO CREEK, NEAR CALLAHAN, CALIF.

LOCATION.--Lat 41°20'22", long 122°43'07", in SE¼SW¼ sec.7, T.40 N., R.7 W., Siskiyou County, on left bank 1,500 ft upstream from Kangaroo Creek, and 4.7 miles northeast of Callahan.

DRAINAGE AREA.--49.5 sq mi.

RECORDS AVAILABLE.--September 1970 to July 1973 (discontinued).

GAGE.--Water-stage recorder. Altitude of gage is 3,580 ft (from topographic map).

EXTREMES.--Current year: Maximum discharge during period October 1972 to July 1973, 198 cfs May 14 (gage height, 5.39 ft); minimum daily, 0.72 cfs Oct. 1-8.
Period of record: Maximum discharge, 558 cfs Jan. 22, 1972 (gage height, 6.18 ft); minimum daily, 0.48 cfs Sept. 1-3, 1970.

REMARKS.--Records good. Several small diversions upstream for irrigation.

DISCHARGE, IN CUBIC FEET PER SECOND, WATER YEAR OCTOBER 1972 TO SEPTEMBER 1973

DAY	OCT	NOV	DEC	JAN	FEB	MAR	APR	MAY	JUN	JUL	AUG	SEP
1	.72	2.4	11	14	16	44	20	71	37	1.6		
2	.72	2.8	10	13	16	40	20	81	32	1.6		
3	.72	3.2	11	12	16	37	19	77	29	1.6		
4	.72	4.5	9.7	11	20	34	20	75	26	1.5		
5	.72	4.3	6.5	9.7	20	31	23	62	22	1.5		
6	.72	3.7	6.0	10	20	30	29	65	21	1.4		
7	.72	3.9	5.6	10	21	27	34	66	20	--		
8	.72	3.7	5.2	11	21	26	38	69	19	--		
9	.83	3.5	5.0	12	22	25	42	68	19	--		
10	.77	3.5	5.0	12	26	25	47	67	17	--		
11	.83	3.9	5.2	16	24	24	44	72	16	--		
12	1.1	3.7	5.4	19	22	23	43	90	13	--		
13	1.4	5.3	5.4	26	21	22	55	114	13	--		
14	1.8	6.3	5.4	23	20	21	47	152	13	--		
15	2.1	7.8	5.9	24	20	20	45	169	13	--		
16	2.3	18	6.8	49	19	21	48	157	13	--		
17	2.8	11	12	39	19	21	50	146	11	--		
18	2.8	9.7	20	43	18	20	44	146	10	--		
19	2.4	11	41	32	18	22	39	124	8.6	--		
20	2.3	9.7	32	27	17	22	34	95	7.9	--		
21	2.3	9.0	45	27	17	21	34	80	6.7	--		
22	2.2	9.3	76	24	17	20	38	68	5.8	--		
23	2.3	9.0	43	23	17	20	49	64	5.5	--		
24	2.3	9.7	34	22	45	20	59	71	6.1	--		
25	2.2	12	28	22	49	22	71	67	6.1	--		
26	2.2	13	25	20	51	22	99	52	5.8	--		
27	2.2	16	23	19	52	22	132	44	5.2	--		
28	2.2	13	22	18	48	22	116	41	3.5	--		
29	2.3	12	18	19	------	22	93	41	2.2	--		
30	2.2	12	17	18	------	22	75	41	1.9	--		
31	2.3	------	16	17	------	22	------	42	------	--		------
TOTAL	51.89	236.9	561.1	641.7	692	770	1,507	2,577	409.3	--		
MEAN	1.67	7.90	18.1	20.7	24.7	24.8	50.2	83.1	13.6	--		
MAX	2.8	18	76	49	52	44	132	169	37	--		
MIN	.72	2.4	5.0	9.7	16	20	19	41	1.9	--		
AC-FT	103	470	1,110	1,270	1,370	1,530	2,990	5,110	812	--		

CAL YR 1972 TOTAL 11,969.63 MEAN 32.7 MAX 409 MIN .50 AC-FT 23,740

PEAK DISCHARGE (BASE, 250 CFS).--No peak above base.

11518050 EAST FORK SCOTT RIVER AT CALLAHAN, CALIF.

LOCATION.--Lat 41°18'15", long 122°46'32", in SE¼NW¼ sec.22, T.40 N., R.8 W., Siskiyou County, on right bank 1.0 mile downstream from Big Mill Creek, and 1.4 miles east of Callahan.

DRAINAGE AREA.--110 sq mi.

PERIOD OF RECORD.--October 1959 to current year.

GAGE.--Water-stage recorder. Altitude of gage is 3,200 ft (from topographic map). Prior to July 26, 1961, at site 1.6 miles downstream at different datum. July 26, 1961, to Aug. 23, 1971, at datum 0.46 ft higher.

AVERAGE DISCHARGE.--14 years, 101 cfs (73,170 acre-ft per year).

EXTREMES.--Current year: Maximum discharge, 1,040 cfs Jan. 16 (gage height, 6.27 ft); minimum daily, 1.1 cfs Aug. 30, 31.
Period of record: Maximum discharge, 7,480 cfs Dec. 22, 1964 (gage heights, 10.39 ft in gage well, 10.19 ft, from floodmarks, present datum), from rating curve extended above 3,000 cfs on basis of slope-area measurements at gage heights 9.51 and 10.39 ft (present datum); minimum daily, 0.72 cfs Aug. 22, 23, Sept. 23, 24, 1970.

REMARKS.--Records good. Several small diversions upstream from station for irrigation.

REVISIONS.--WSP 1929: Drainage area.

DISCHARGE, IN CUBIC FEET PER SECOND, WATER YEAR OCTOBER 1972 TO SEPTEMBER 1973

DAY	OCT	NOV	DEC	JAN	FEB	MAR	APR	MAY	JUN	JUL	AUG	SEP
1	3.5	10	25	40	48	168	60	218	144	19	3.8	1.2
2	3.5	12	24	38	48	136	56	248	122	18	3.5	1.2
3	3.2	17	24	34	47	120	57	259	114	16	3.5	1.2
4	3.2	25	22	31	63	105	60	242	103	15	3.2	1.2
5	3.2	19	17	27	91	93	74	188	97	15	3.2	1.2
6	3.2	16	16	28	80	88	97	197	97	14	2.8	1.2
7	3.2	14	15	29	77	80	114	209	93	13	2.8	1.2
8	3.2	14	15	31	76	74	118	218	93	13	2.6	1.2
9	3.5	13	14	36	83	72	135	215	86	12	2.6	1.2
10	4.5	13	14	33	114	73	162	206	76	11	2.6	1.2
11	9.1	14	15	66	91	73	180	227	67	10	2.6	1.2
12	18	13	15	109	79	69	188	293	62	11	2.6	1.2
13	14	20	15	143	72	65	224	370	57	11	2.4	1.2
14	15	25	15	116	69	61	183	470	52	9.1	2.1	1.2
15	20	38	15	144	65	58	167	500	47	8.8	1.3	1.2
16	18	75	17	544	62	62	180	485	43	8.4	1.2	1.2
17	14	37	42	199	60	63	188	475	41	8.4	1.3	1.2
18	12	28	126	250	57	61	157	465	39	8.8	1.3	1.2
19	10	29	168	141	54	67	131	401	36	8.4	1.3	1.8
20	9.5	25	124	107	53	74	114	325	38	8.4	1.3	2.8
21	9.3	23	185	94	52	70	114	274	39	8.0	1.3	2.4
22	8.9	23	289	83	52	65	133	255	36	8.0	1.4	2.6
23	9.1	22	147	74	52	63	178	236	33	7.4	1.3	3.2
24	9.3	22	114	69	333	65	206	263	29	7.0	1.4	3.0
25	8.8	25	90	65	286	69	236	230	30	6.4	1.4	2.8
26	8.8	26	76	60	322	73	321	170	31	6.1	1.4	2.8
27	8.8	37	69	57	263	73	392	155	28	5.8	1.3	2.6
28	8.9	30	61	54	207	70	357	160	25	5.5	1.3	2.4
29	9.3	28	50	54	------	65	297	167	23	4.9	1.2	2.2
30	8.9	25	48	53	------	65	236	178	21	4.0	1.1	2.2
31	9.3	------	44	49	------	61	------	170	------	4.0	1.1	------
TOTAL	273.2	718	1,911	2,858	2,956	2,401	5,115	8,469	1,802	305.4	62.2	52.4
MEAN	8.81	23.9	61.6	92.2	106	77.5	171	273	60.1	9.85	2.01	1.75
MAX	20	75	289	544	333	168	392	500	144	19	3.8	3.2
MIN	3.2	10	14	27	47	58	56	155	21	4.0	1.1	1.2
AC-FT	542	1,420	3,790	5,670	5,860	4,760	10,150	16,800	3,570	606	123	104

CAL YR 1972 TOTAL 31,812.8 MEAN 86.9 MAX 1,290 MIN 2.6 AC-FT 63,100
WTR YR 1973 TOTAL 26,923.2 MEAN 73.8 MAX 544 MIN 1.1 AC-FT 53,400

PEAK DISCHARGE (BASE, 550 CFS).--Jan. 16 (0530) 1,040 cfs (6.27 ft); May 15 (2100) 564 cfs (5.49 ft).

11518310 CEDAR GULCH NEAR CALLAHAN, CALIF.

LOCATION.--Lat 41°20'40", long 122°49'47", near center of sec.1, T.40 N., R.9 W., Siskiyou County, on left bank at culvert on county road, 2.9 miles northwest of Callahan.

DRAINAGE AREA.--0.99 sq mi.

PERIOD OF RECORD.--Water years 1961-66 (annual maximum), February 1966 to September 1973 (discontinued).

GAGE.--Water-stage recorder, crest-stage gages, and float-operated rain gage. Altitude of gage is 3,040 ft (from topographic map). Prior to Feb. 11, 1966, crest-stage gages only at same site and datum.

AVERAGE DISCHARGE.--7 years, 0.35 cfs (254 acre-ft per year).

EXTREMES.--Current year: Maximum discharge, 2.2 cfs Nov. 5 (gage height, 5.55 ft); no flow for several months. Period of record: Maximum discharge, 144 cfs Dec. 22, 1964 (gage height, 10.18 ft, from floodmarks), from rating curve extended above 37 cfs on basis of computations of flow through culvert at gage heights 8.25 ft and 10.18 ft; no flow for several months in each year.

REMARKS.--Records good above 0.20 cfs, fair below. No regulation or diversion above station.

DISCHARGE, IN CUBIC FEET PER SECOND, WATER YEAR OCTOBER 1972 TO SEPTEMBER 1973

DAY	OCT	NOV	DEC	JAN	FEB	MAR	APR	MAY	JUN	JUL	AUG	SEP
1		0	0	.07	.22	.41	.05	.14				0
2		0	0	.06	.19	.35	.05	.12				0
3		0	0	.06	.19	.35	.05	.14				0
4		.41	0	.06	.33	.32	.05	.14				.01
5		1.9	0	.06	.73	.29	.05	.12				.02
6		2.0	0	.06	.60	.24	.06	.11				.02
7		1.4	0	.05	.48	.22	.06	.11				.02
8		.09	0	.05	.41	.19	.06	.11				.03
9		.07	0	.05	.41	.19	.05	.11				.03
10		.06	0	.05	.60	.19	.05	.11				.03
11		.06	0	.13	.52	.16	.12	.11				.03
12		.05	0	.65	.44	.14	.06	.12				0
13		.02	0	.56	.35	.12	.09	.16				0
14		0	0	.35	.32	.12	.07	.26				0
15		0	0	.29	.29	.11	.07	.24				0
16		.02	0	.64	.26	.11	.09	.22				0
17		.05	.12	.48	.22	.09	.09	.19				0
18		.03	.32	.73	.19	.07	.09	.19				0
19		.03	.29	.56	.19	.07	.09	.16				0
20		.03	.16	.38	.16	.07	.07	.12				0
21		.02	.12	.35	.16	.07	.07	.09				0
22		0	.32	.32	.12	.06	.07	.07				0
23		0	.19	.29	.12	.06	.07	.06				0
24		0	.16	.26	.42	.06	.07	.07				0
25		0	.12	.29	.44	.06	.07	.07				.04
26		0	.12	.24	.44	.05	.09	.05				.07
27		0	.14	.22	.44	.05	.14	.03				.06
28		0	.11	.22	.44	.05	.16	0				.03
29		0	.11	.24	------	.05	.16	0				.03
30		0	.09	.26	------	.05	.14	0				.03
31		------	.07	.24	------	.05	------	0	------			------
TOTAL	0	6.24	2.44	8.27	9.68	4.42	2.41	3.42	0	0	0	.45
MEAN	0	.21	.079	.27	.35	.14	.080	.11	0	0	0	.015
MAX	0	2.0	.32	.73	.73	.41	.16	.26	0	0	0	.07
MIN	0	0	0	.05	.12	.05	.05	0	0	0	0	0
AC-FT	0	12	4.8	16	19	8.8	4.8	6.8	0	0	0	.9
(a)	.55	1.46	2.85	2.38	1.54	.27	.33	0	0	.02	0	.87

CAL YR 1972 TOTAL 176.55 MEAN .48 MAX 26 MIN 0 AC-FT 350
WTR YR 1973 TOTAL 37.33 MEAN .10 MAX 2.0 MIN 0 AC-FT 74

a Precipitation, in inches (some precipitation falling as snow may not be included).

11519500 SCOTT RIVER NEAR FORT JONES, CALIF.

LOCATION (revised).--Lat 41°38'27", long 123°00'50", in NE¼NE¼ sec.29, T.44 N., R.10 W., Siskiyou County, on right bank 1.8 miles upstream from Snow Creek, and 9.0 miles west of Fort Jones.

DRAINAGE AREA.--653 sq mi.

PERIOD OF RECORD.--December 1941 to current year. Monthly discharge only October to December 1941, published in WSP 1315-B.

GAGE.--Water-stage recorder. Datum of gage is 2,623.80 ft above mean sea level (levels by Corps of Engineers). Prior to Oct. 1, 1966, water-stage recorder 400 ft downstream at datum 2.00 ft higher.

AVERAGE DISCHARGE.--32 years, 659 cfs (477,400 acre-ft per year).

EXTREMES.--Current year: Maximum discharge, 2,930 cfs Dec. 22 (gage height, 9.65 ft); minimum daily, 22 cfs Aug. 12-14.

Period of record: Maximum discharge, 54,600 cfs Dec. 22, 1964 (gage height, 25.34 ft, from floodmarks, site and datum then in use), from rating curve extended above 15,000 cfs on basis of slope-area measurement at 21.40 ft; minimum, 20 cfs Sept. 14, 15, 1955.

REMARKS.--Records good. Diversions for irrigation of about 30,000 acres above station. Records of chemical analyses for the current year are published in Part 2 of this report.

REVISIONS (WATER YEARS).--WSP 1445: 1942-43(M), 1946(M), 1948. WSP 1715: 1951-52(M). WSP 1929: Drainage area.

DISCHARGE, IN CUBIC FEET PER SECOND, WATER YEAR OCTOBER 1972 TO SEPTEMBER 1973

DAY	OCT	NOV	DEC	JAN	FEB	MAR	APR	MAY	JUN	JUL	AUG	SEP
1	71	92	131	338	492	677	342	766	669	96	44	25
2	71	92	132	318	478	625	330	755	590	98	42	25
3	71	97	132	302	460	595	314	810	538	96	41	25
4	71	113	137	274	456	565	306	824	496	94	41	24
5	72	135	134	250	565	530	310	760	445	90	41	23
6	73	127	130	240	570	510	330	723	423	88	41	23
7	73	121	127	218	545	483	370	753	405	86	40	23
8	73	119	110	203	525	465	411	759	399	84	37	23
9	72	121	109	215	525	447	415	767	390	79	34	23
10	74	120	109	222	605	447	456	737	357	78	23	23
11	75	119	110	346	625	474	535	740	336	71	23	23
12	74	118	113	1,560	580	456	605	812	315	66	22	23
13	77	117	115	2,540	535	442	705	1,020	295	59	22	23
14	80	117	119	1,760	510	424	661	1,350	268	58	22	23
15	83	123	119	1,280	492	411	595	1,550	241	58	23	23
16	90	130	127	2,260	474	406	575	1,600	226	58	23	23
17	98	163	519	1,940	465	411	640	1,640	207	58	24	23
18	98	148	998	1,510	451	402	615	1,730	199	54	24	23
19	97	141	1,770	1,270	438	397	540	1,610	186	53	24	24
20	97	139	1,480	992	429	402	483	1,300	165	53	24	24
21	94	139	1,360	914	424	406	442	1,080	160	57	24	24
22	92	135	2,700	842	420	402	433	938	160	58	24	24
23	94	134	1,660	770	411	375	492	896	155	53	24	24
24	92	131	1,260	716	469	370	560	956	156	51	24	25
25	92	128	932	699	836	366	610	1,120	156	49	24	28
26	92	127	694	630	740	374	740	884	145	49	24	44
27	92	129	600	590	836	375	1,040	752	126	47	24	45
28	91	135	535	565	746	366	1,170	710	124	47	24	48
29	91	137	456	555	------	350	1,020	672	118	48	24	68
30	91	133	410	565	------	350	866	709	114	48	24	59
31	91	------	370	550	------	354	------	722	------	47	25	------
TOTAL	2,602	3,780	17,698	25,434	15,102	13,657	16,911	30,445	8,564	2,031	880	858
MEAN	83.9	126	571	820	539	441	564	982	285	65.5	28.4	28.6
MAX	98	163	2,700	2,540	836	677	1,170	1,730	669	98	44	68
MIN	71	92	109	203	411	350	306	672	114	47	22	23
AC-FT	5,160	7,500	35,100	50,450	29,950	27,090	33,540	60,390	16,990	4,030	1,750	1,700

CAL YR 1972 TOTAL 273,430 MEAN 747 MAX 13,000 MIN 59 AC-FT 542,300
WTR YR 1973 TOTAL 137,962 MEAN 378 MAX 2,700 MIN 22 AC-FT 273,600

PEAK DISCHARGE (BASE, 2,000 CFS)

DATE	TIME	G.H.	DISCHARGE	DATE	TIME	G.H.	DISCHARGE
12-22	0900	9.65	2,930	1-16	1730	9.63	2,910
1-13	1200	9.53	2,810				

11520500 KLAMATH RIVER NEAR SEIAD VALLEY, CALIF.

LOCATION.--Lat 41°51'14", long 123°13'52", in SW¼SW¼ sec.3, T.46 N., R.12 W., Siskiyou County, Klamath National Forest, on left bank 0.4 mile upstream from Bittenbender Creek, 1.4 miles downstream from Grider Creek, and 2.2 miles west of Seiad Valley.

DRAINAGE AREA.--6,940 sq mi, approximately (not including Lost River or Lower Klamath Lake basins).

PERIOD OF RECORD.--October 1912 to September 1925, July 1951 to current year. Monthly discharges only for some periods, published in WSP 1315-B.

GAGE.--Water-stage recorder. Altitude of gage is 1,320 ft (from river-profile map). November 1912 to June 1925, nonrecording gage at site 3.5 miles upstream at different datum.

AVERAGE DISCHARGE.--35 years, 4,116 cfs (2,982,000 acre-ft per year).

EXTREMES.--Current year: Maximum discharge, 10,300 cfs Jan. 16 (gage height, 8.83 ft); minimum daily, 802 cfs Aug. 12.
Period of record: Maximum discharge, 165,000 cfs Dec. 23, 1964 (gage height, 33.75 ft, from floodmarks), from rating curve extended above 49,000 cfs on basis of slope-area measurements at gage heights 20.1 and 29.2 ft; minimum daily, 320 cfs Nov. 25, 1917.

REMARKS.--Records good. Flow regulated considerably by reservoirs and powerplants above station. Large diversions above station for irrigation. Records of water temperatures for the current year are published in Part 2 of this report.

DISCHARGE, IN CUBIC FEET PER SECOND, WATER YEAR OCTOBER 1972 TO SEPTEMBER 1973

DAY	OCT	NOV	DEC	JAN	FEB	MAR	APR	MAY	JUN	JUL	AUG	SEP
1	2,160	2,250	3,430	4,240	4,250	4,160	2,630	2,950	2,250	1,030	848	843
2	2,160	2,330	3,520	4,200	4,220	4,080	2,600	2,700	1,900	1,010	848	843
3	2,110	2,790	3,570	4,110	4,110	4,000	2,540	2,730	1,820	998	834	847
4	2,100	2,700	3,660	3,900	4,130	4,300	2,520	2,690	1,740	998	834	848
5	2,100	2,460	3,550	3,860	4,380	4,270	2,540	2,610	1,660	990	834	847
6	2,100	2,370	3,590	3,870	4,510	4,220	2,430	2,430	1,600	982	828	829
7	2,090	2,420	3,470	3,820	4,070	4,030	2,400	2,440	1,580	974	828	831
8	2,090	3,140	3,430	3,790	3,960	4,140	2,440	2,480	1,550	982	818	844
9	2,120	3,320	3,240	3,830	3,960	3,920	2,500	2,500	1,540	974	813	845
10	2,180	3,350	2,820	3,820	4,030	3,820	2,550	2,450	1,480	966	826	832
11	2,200	3,310	3,230	4,040	4,100	3,800	2,690	2,480	1,440	966	811	835
12	2,220	3,310	3,520	6,100	3,990	3,520	2,810	2,600	1,410	950	802	840
13	2,220	3,320	3,400	8,340	3,940	3,940	2,980	2,860	1,370	929	805	846
14	2,220	3,380	3,380	7,690	3,920	4,140	2,950	3,250	1,340	901	825	842
15	2,220	3,500	3,540	6,620	3,890	4,130	2,840	3,480	1,310	894	839	846
16	2,220	3,520	3,870	8,620	3,800	4,080	2,800	3,590	1,290	880	824	840
17	2,230	3,550	4,200	8,460	3,780	3,850	2,870	3,610	1,280	874	819	833
18	2,230	3,590	4,740	6,980	3,730	3,660	2,850	3,720	1,270	880	820	841
19	2,240	3,620	6,000	6,480	3,720	3,650	2,700	3,680	1,240	887	826	887
20	2,240	3,610	5,480	5,950	3,640	3,580	2,600	3,330	1,210	901	826	966
21	2,230	3,570	6,250	5,720	3,500	3,140	2,520	2,920	1,170	901	821	1,040
22	2,230	3,570	9,050	5,470	3,500	2,980	2,510	2,800	1,160	908	824	1,010
23	2,230	3,660	7,650	5,240	3,520	2,910	2,580	2,690	1,150	908	827	1,060
24	2,230	3,780	7,260	4,910	3,620	2,880	2,640	2,790	1,160	887	834	1,090
25	2,210	3,790	6,570	4,920	4,060	2,870	2,750	2,920	1,160	880	850	1,120
26	2,220	3,820	6,190	4,430	4,080	2,870	2,930	2,700	1,140	874	851	1,050
27	2,230	3,890	5,980	4,240	4,060	2,690	3,300	2,490	1,110	860	854	1,010
28	2,230	3,960	5,670	4,200	4,130	2,660	3,520	2,420	1,090	848	849	1,010
29	2,240	3,850	5,120	4,320	------	2,630	3,340	2,300	1,050	848	845	1,020
30	2,230	3,690	4,400	4,320	------	2,670	3,170	2,320	1,040	848	846	1,040
31	2,230	------	4,260	4,320	------	2,680	------	2,400	------	848	841	------
TOTAL	67,960	99,420	144,040	160,810	110,600	110,270	82,500	87,330	41,510	28,576	25,750	27,435
MEAN	2,192	3,314	4,646	5,187	3,950	3,557	2,750	2,817	1,384	922	831	915
MAX	2,240	3,960	9,050	8,620	4,510	4,300	3,520	3,720	2,250	1,030	854	1,120
MIN	2,090	2,250	2,820	3,790	3,500	2,630	2,400	2,300	1,040	848	802	829
AC-FT	134,800	197,200	285,700	319,000	219,400	218,700	163,600	173,200	82,340	56,680	51,080	54,420

CAL YR 1972 TOTAL 1,900,550 MEAN 5,193 MAX 51,900 MIN 1,010 AC-FT 3,770,000
WTR YR 1973 TOTAL 986,201 MEAN 2,702 MAX 9,050 MIN 802 AC-FT 1,956,000

11521500 INDIAN CREEK NEAR HAPPY CAMP, CALIF.

LOCATION.--Lat 41°50'07", long 123°22'55", in SW¼SW¼ sec.26, T.17 N., R.7 E., Siskiyou County, on left bank 0.2 mile upstream from Slater Creek, 3.0 miles north of Happy Camp, and 3.5 miles upstream from mouth.

DRAINAGE AREA.--120 sq mi.

PERIOD OF RECORD.--September 1911 to September 1921 (fragmentary), December 1956 to current year. Monthly discharge only for some periods, published in WSP 1315-B.

GAGE.--Water-stage recorder. Altitude of gage is 1,200 ft (from topographic map). Prior to December 1956, nonrecording gages at sites 0.2 mile upstream at different datums. December 1956 to Sept. 20, 1969, water-stage recorder at site 0.8 mile upstream at different datum.

AVERAGE DISCHARGE.--19 years (1911-14, 1957-73), 439 cfs (318,100 acre-ft per year).

EXTREMES.--Current year: Maximum discharge, 2,690 cfs Dec. 18 (gage height, 8.31 ft); minimum daily, 39 cfs Sept. 10-17.

Period of record: Maximum discharge, 39,000 cfs Dec. 22, 1964 (gage height, 36.59 ft, from floodmarks in gage well, site and datum then in use, 24.3 ft, from floodmarks, present site and datum), from rating curve extended above 6,000 cfs on basis of slope-area measurement at gage height 29.0 ft; minimum observed, 20 cfs Aug. 19 to Sept. 6, 1914.

Flood of Dec. 21, 1955, reached a stage of 29.0 ft, site and datum then in use, from floodmarks (discharge, 23,000 cfs on basis of slope-area measurement of peak flow).

REMARKS.--Records fair. Small diversions above station for irrigation.

REVISIONS (WATER YEARS).--WSP 1635: 1957-58.

DISCHARGE, IN CUBIC FEET PER SECOND, WATER YEAR OCTOBER 1972 TO SEPTEMBER 1973

DAY	OCT	NOV	DEC	JAN	FEB	MAR	APR	MAY	JUN	JUL	AUG	SEP
1	48	53	105	263	326	716	355	485	203	80	50	42
2	47	60	98	253	310	602	342	425	186	78	48	42
3	46	98	149	235	302	560	334	409	179	76	48	42
4	45	207	135	221	326	515	338	415	170	75	48	42
5	44	130	115	214	440	475	386	383	165	74	48	42
6	44	92	104	204	450	485	388	385	160	73	47	42
7	43	109	87	188	445	460	376	385	153	72	47	42
8	43	94	67	185	435	431	370	386	148	70	47	42
9	49	105	64	185	435	418	388	394	142	69	46	40
10	63	135	61	191	460	495	419	374	133	67	46	39
11	82	143	62	306	500	500	465	368	128	65	46	39
12	73	109	65	1,810	485	450	485	406	127	63	45	39
13	57	109	70	1,880	465	418	510	475	126	62	45	39
14	55	107	71	1,080	445	386	495	538	121	61	46	39
15	51	94	72	1,010	430	368	482	499	118	60	45	39
16	50	109	235	1,800	415	368	495	465	120	60	44	39
17	48	100	1,710	1,200	400	359	505	474	130	58	44	39
18	47	94	1,570	1,070	388	342	482	451	122	58	44	42
19	47	128	1,600	847	380	431	460	385	113	58	44	59
20	46	118	1,070	674	367	418	425	335	109	58	43	71
21	46	111	1,480	575	358	418	382	298	106	58	42	55
22	44	109	2,280	500	350	395	364	281	103	59	43	50
23	44	100	1,440	450	343	391	382	279	101	58	44	89
24	44	96	1,180	431	430	395	410	339	97	56	46	105
25	43	92	740	404	820	413	432	298	95	54	47	88
26	43	176	555	368	840	427	465	255	93	54	46	61
27	43	200	485	346	765	409	490	236	89	53	46	53
28	47	140	409	330	656	382	520	232	87	52	44	49
29	48	128	355	326	------	359	580	226	84	51	43	46
30	46	113	318	342	------	368	530	235	82	50	42	44
31	46	------	286	346	------	368	------	223	------	50	42	------
TOTAL	1,522	3,459	17,038	18,234	12,766	13,522	13,055	11,339	3,790	1,932	1,406	1,500
MEAN	49.1	115	550	588	456	436	435	366	126	62.3	45.4	50.0
MAX	82	207	2,280	1,880	840	716	580	538	203	80	50	105
MIN	43	53	61	185	302	342	334	223	82	50	42	39
AC-FT	3,020	6,860	33,790	36,170	25,320	26,820	25,890	22,490	7,520	3,830	2,790	2,980

CAL YR 1972 TOTAL 197,385 MEAN 539 MAX 11,900 MIN 43 AC-FT 391,500
WTR YR 1973 TOTAL 99,563 MEAN 273 MAX 2,280 MIN 39 AC-FT 197,500

PEAK DISCHARGE (BASE, 2,000 CFS)

DATE	TIME	G.H.	DISCHARGE	DATE	TIME	G.H.	DISCHARGE
12-18	1700	8.31	2,690	1-12	1030	8.18	2,550
12-22	1315	8.23	2,600	1-16	0700	7.79	2,140

11522500 SALMON RIVER AT SOMES BAR, CALIF.

LOCATION.--Lat 41°22'40", long 123°28'35", in NE¼ sec.3, T.11 N., R.6 E., Siskiyou County, Klamath National Forest, on left bank at Somes Bar, 1.0 mile upstream from mouth.

DRAINAGE AREA.--751 sq mi.

PERIOD OF RECORD.--September 1911 to September 1915, October 1927 to current year. Monthly discharge only for some periods, published in WSP 1315-B.

GAGE.--Water-stage recorder. Datum of gage is 482.97 ft above mean sea level. Prior to October 1927, nonrecording gage at different datum, October 1927 to Dec. 22, 1964, water-stage recorder at site 0.5 mile upstream at datum 6.54 ft higher.

AVERAGE DISCHARGE.--50 years, 1,793 cfs (1,299,000 acre-ft per year).

EXTREMES.--Current year: Maximum discharge, 10,900 cfs Jan. 13 (gage height, 10.82 ft); minimum daily, 133 cfs Sept. 13-15.

Period of record: Maximum discharge, 133,000 cfs Dec. 22, 1964 (gage height, 46.6 ft, present site and datum, from floodmarks), from rating curve extended above 33,000 cfs; minimum, 70 cfs Aug. 25, Sept. 4, 5, 1931.

REMARKS.--Records good. No storage or large diversion above station. Records of water temperatures for the current year are published in Part 2 of this report.

REVISIONS (WATER YEARS).--WSP 1285: 1912, 1914, 1915(M), 1946(M), 1948(M). WRD Calif. 1972: 1970-71(P).

DISCHARGE, IN CUBIC FEET PER SECOND, WATER YEAR OCTOBER 1972 TO SEPTEMBER 1973

DAY	OCT	NOV	DEC	JAN	FEB	MAR	APR	MAY	JUN	JUL	AUG	SEP
1	215	210	381	1,080	1,700	2,100	1,520	2,410	1,720	482	204	149
2	208	240	377	1,040	1,650	1,960	1,450	2,450	1,440	450	201	146
3	201	280	456	964	1,600	1,940	1,420	2,500	1,350	435	198	146
4	198	390	440	881	1,630	1,840	1,410	2,430	1,250	430	191	143
5	194	350	420	800	2,060	1,750	1,500	2,140	1,210	425	188	140
6	191	310	400	740	2,110	1,800	1,740	2,150	1,230	405	184	138
7	188	280	380	700	2,040	1,720	1,930	2,180	1,220	391	178	138
8	188	280	370	720	1,960	1,660	1,940	2,170	1,180	377	178	138
9	190	330	350	860	1,930	1,620	2,100	2,210	1,140	367	175	138
10	210	380	340	820	2,210	1,800	2,250	2,140	1,040	353	171	138
11	220	360	330	1,850	2,180	1,920	2,510	2,190	964	344	175	135
12	230	340	330	6,470	2,130	1,810	2,600	2,470	943	319	175	135
13	220	320	320	9,300	1,990	1,730	2,570	3,040	901	358	168	133
14	215	310	320	5,240	1,940	1,630	2,330	3,790	827	327	165	133
15	210	325	315	3,970	1,840	1,560	2,230	3,930	775	315	162	133
16	215	391	690	7,170	1,750	1,570	2,190	3,820	743	302	160	135
17	215	386	5,430	5,940	1,710	1,560	2,520	3,980	781	294	160	135
18	210	362	5,410	4,760	1,650	1,480	2,210	3,900	743	302	160	135
19	210	559	6,700	4,080	1,600	1,540	2,000	3,350	692	290	157	204
20	220	509	4,350	3,460	1,550	1,540	1,830	2,690	692	372	157	405
21	215	420	4,140	3,040	1,510	1,560	1,750	2,320	705	340	154	349
22	205	430	7,650	2,640	1,500	1,510	1,790	2,230	705	286	151	290
23	200	405	4,900	2,410	1,470	1,500	2,030	2,170	668	259	151	583
24	200	377	3,960	2,350	1,600	1,520	2,140	2,820	613	259	154	692
25	200	358	2,820	2,370	1,850	1,570	2,330	2,630	589	251	168	655
26	195	372	2,190	2,200	1,940	1,620	2,890	1,940	619	244	171	410
27	195	477	1,960	2,070	2,100	1,610	3,580	1,730	595	236	162	315
28	195	466	1,720	1,950	2,020	1,570	3,460	1,780	565	229	160	270
29	190	425	1,490	1,870	------	1,500	2,990	1,800	548	226	157	244
30	190	396	1,330	1,730	------	1,570	2,590	1,990	520	219	151	229
31	190	------	1,200	1,800	------	1,580	------	1,920	------	211	149	------
TOTAL	6,323	11,038	61,469	85,275	51,220	51,640	65,800	79,270	26,968	10,098	5,235	7,134
MEAN	204	368	1,983	2,751	1,829	1,666	2,193	2,557	899	326	169	238
MAX	230	559	7,650	9,300	2,210	2,100	3,580	3,980	1,720	482	204	692
MIN	188	210	315	700	1,470	1,480	1,410	1,730	520	211	149	133
AC-FT	12,540	21,890	121,900	169,100	101,600	102,400	130,500	157,200	53,490	20,030	10,380	14,150

CAL YR 1972 TOTAL 892,097 MEAN 2,437 MAX 43,600 MIN 180 AC-FT 1,769,000
WTR YR 1973 TOTAL 461,470 MEAN 1,264 MAX 9,300 MIN 133 AC-FT 915,300

PEAK DISCHARGE (BASE, 10,000 CFS).--Jan. 13 (0645) 10,900 cfs (10.82 ft).

NOTE.--No gage-height record Oct. 9 to Nov. 15.

11523000 KLAMATH RIVER AT ORLEANS, CALIF.

LOCATION.--Lat 41°18'13", long 123°32'00", in SW¼NE¼ sec.31, T.11 N., R.6 E., Humboldt County, Six Rivers National Forest on right bank at Orleans, 25 ft upstream from highway bridge, and 0.2 mile downstream from Cheenitch Creek.

DRAINAGE AREA.--8,475 sq mi (not including Lost River or Lower Klamath Lake basins).

PERIOD OF RECORD.--October 1927 to current year. Monthly discharge only for some periods, published in WSP 1315-B. Prior to October 1965, published as "at Somesbar."

GAGE.--Water-stage recorder. Datum of gage is 355.98 ft above mean sea level. Prior to Oct. 1, 1965, at site 6.7 miles upstream at datum 90.68 ft higher.

AVERAGE DISCHARGE.--46 years, 8,077 cfs (5,852,000 acre-ft per year).

EXTREMES.--Current year: Maximum discharge, 38,400 cfs Dec. 22 (gage height, 14.89 ft); minimum daily, 1,280 cfs Sept. 8-18.
Period of record: Maximum discharge, 307,000 cfs Dec. 22, 1964 (gage height, 76.5 ft, from floodmarks, site and datum then in use), from rating curve extended above 80,000 cfs by slope-conveyance study; minimum daily, 320 cfs Aug. 25, Sept. 1, 1951.

REMARKS.--Records good. Flow considerably regulated by reservoirs and powerplants above station. Large diversions above station for irrigation. Records of water temperatures and suspended-sediment discharge for the current year are published in Part 2 of this report.

REVISIONS (WATER YEARS).--WSP 1565: 1935(M), 1949.

DISCHARGE, IN CUBIC FEET PER SECOND, WATER YEAR OCTOBER 1972 TO SEPTEMBER 1973

DAY	OCT	NOV	DEC	JAN	FEB	MAR	APR	MAY	JUN	JUL	AUG	SEP
1	2,850	2,860	4,700	6,800	8,800	11,600	6,940	7,700	5,260	2,060	1,500	1,320
2	2,800	3,020	4,590	6,200	8,580	10,900	6,550	7,420	4,690	2,010	1,480	1,320
3	2,730	3,530	4,950	6,000	8,470	10,500	6,330	7,430	4,310	1,970	1,470	1,320
4	2,670	5,240	5,350	5,600	8,470	10,100	6,260	7,390	4,080	1,950	1,450	1,320
5	2,660	4,580	4,930	5,200	10,000	9,880	6,540	7,130	3,890	1,930	1,430	1,320
6	2,650	3,670	5,040	5,000	10,700	9,950	7,070	7,070	3,780	1,900	1,420	1,300
7	2,620	3,770	4,730	4,850	10,300	9,280	7,230	7,020	3,660	1,880	1,410	1,290
8	2,610	3,820	4,550	4,850	9,760	9,100	7,230	6,980	3,540	1,850	1,400	1,280
9	2,640	4,420	4,400	5,300	9,830	8,730	7,380	7,010	3,460	1,830	1,390	1,280
10	2,940	4,900	4,300	6,000	11,200	8,820	7,630	6,820	3,320	1,810	1,380	1,280
11	3,140	4,800	4,200	9,420	11,200	9,260	8,420	6,750	3,200	1,790	1,370	1,280
12	3,230	4,550	4,150	21,700	10,800	8,400	8,780	7,080	3,130	1,780	1,360	1,280
13	3,060	4,510	4,100	32,700	10,000	8,100	8,730	7,760	3,080	1,770	1,340	1,280
14	3,040	4,530	4,050	24,900	9,680	8,250	7,990	9,470	2,980	1,720	1,320	1,280
15	3,000	4,510	4,180	20,100	9,240	8,160	7,590	10,200	2,910	1,680	1,310	1,280
16	3,060	4,650	5,420	29,500	8,800	8,200	7,420	10,200	2,850	1,650	1,350	1,280
17	3,030	4,650	23,000	28,800	8,530	8,180	8,180	10,400	2,910	1,640	1,350	1,280
18	2,980	4,650	24,400	23,700	8,270	7,530	7,590	10,600	2,850	1,620	1,350	1,280
19	2,970	5,340	28,700	20,800	8,030	8,200	7,190	9,640	2,750	1,620	1,340	1,440
20	2,940	5,310	21,900	17,600	7,820	8,250	6,770	8,050	2,710	1,680	1,340	1,870
21	2,880	4,970	19,600	15,600	7,510	8,030	6,400	7,220	2,680	1,680	1,340	1,830
22	2,850	4,940	35,000	13,800	7,390	7,400	6,440	6,920	2,620	1,650	1,330	1,730
23	2,840	4,860	27,400	12,400	7,370	7,300	6,940	6,460	2,580	1,630	1,330	2,220
24	2,820	4,930	23,400	11,700	7,740	7,250	7,080	7,220	2,530	1,630	1,330	2,550
25	2,770	4,900	17,400	11,500	9,880	7,290	7,310	7,410	2,480	1,540	1,360	2,590
26	2,760	5,050	12,500	10,600	11,000	7,360	8,400	6,440	2,500	1,540	1,380	2,040
27	2,760	5,580	11,000	9,680	11,500	7,240	10,000	5,780	2,450	1,530	1,380	1,780
28	2,780	5,450	9,090	9,030	10,800	6,980	10,300	5,560	2,380	1,510	1,380	1,680
29	2,850	5,220	8,700	9,050	------	6,860	9,240	5,440	2,300	1,500	1,370	1,640
30	2,820	5,100	7,900	9,800	------	6,990	8,290	5,530	2,160	1,490	1,360	1,630
31	2,790	------	7,200	9,190	------	7,040	------	5,550	------	1,480	1,340	------
TOTAL	88,340	138,310	350,830	407,370	261,670	261,130	228,220	231,650	94,040	53,320	42,660	46,270
MEAN	2,856	4,610	11,320	13,140	9,345	8,424	7,607	7,473	3,135	1,720	1,376	1,542
MAX	3,230	5,580	35,000	32,700	11,500	11,600	10,300	10,600	5,260	2,060	1,500	2,590
MIN	2,610	2,860	4,050	4,850	7,370	6,860	6,260	5,440	2,160	1,480	1,310	1,280
AC-FT	175,600	274,300	695,900	808,000	519,000	518,000	452,700	459,500	186,500	105,800	84,620	91,780

CAL YR 1972 TOTAL 4,148,600 MEAN 11,330 MAX 151,000 MIN 1,630 AC-FT 8,229,000
WTR YR 1973 TOTAL 2,204,010 MEAN 6,038 MAX 35,000 MIN 1,280 AC-FT 4,372,000

PEAK DISCHARGE (BASE, 40,000 CFS).--No peak above base.

11523200 TRINITY RIVER ABOVE COFFEE CREEK, NEAR TRINITY CENTER, CALIF.

LOCATION.--Lat 41°06'29", long 122°42'23", on line between secs.31 and 32, T.38 N., R.7 W., Trinity County, Shasta National Forest, on right bank 250 ft downstream from Chinquapin Gulch, 1.8 miles upstream from Coffee Creek, and 8.5 miles north of Trinity Center.

DRAINAGE AREA.--149 sq mi.

PERIOD OF RECORD.--September 1957 to current year.

GAGE.--Water-stage recorder. Datum of gage is 2,533.36 ft above mean sea level.

AVERAGE DISCHARGE.--16 years, 418 cfs (302,800 acre-ft per year).

EXTREMES.--Current year: Maximum discharge, 2,840 cfs Dec. 22 (gage height, 5.86 ft); minimum daily, 34 cfs Oct. 1-8.
Period of record: Maximum discharge, 20,800 cfs Dec. 22, 1964 (gage height, 12.30 ft in gage well, 13.4 ft, from floodmarks), from rating curve extended above 5,000 cfs on basis of slope-area measurement at gage height 9.91 ft; minimum daily, 27 cfs Nov. 3, 1966.
Flood of Dec. 22, 1955, reached a stage of 10.5 ft, from floodmarks (discharge, 11,400 cfs).

REMARKS.--Records good. No regulation or diversion above station.

DISCHARGE, IN CUBIC FEET PER SECOND, WATER YEAR OCTOBER 1972 TO SEPTEMBER 1973

DAY	OCT	NOV	DEC	JAN	FEB	MAR	APR	MAY	JUN	JUL	AUG	SEP
1	34	51	115	190	189	830	327	1,220	630	108	47	40
2	34	52	114	183	186	693	300	1,320	550	103	46	39
3	34	80	113	172	188	595	288	1,360	512	100	46	39
4	34	159	103	152	234	506	430	1,240	474	96	44	38
5	34	94	88	148	267	442	490	1,070	465	93	44	37
6	34	75	85	149	272	438	590	1,140	471	90	44	37
7	34	105	83	133	311	398	630	1,200	448	87	44	37
8	34	87	80	137	330	373	700	1,240	439	85	43	37
9	41	89	82	152	398	366	830	1,220	400	82	43	37
10	65	92	84	146	506	406	920	1,200	349	79	44	36
11	89	114	87	158	432	454	1,000	1,280	318	76	43	36
12	114	96	89	243	372	418	1,190	1,560	297	82	43	35
13	68	155	91	524	327	383	1,180	1,930	272	77	43	35
14	75	159	93	467	367	352	1,100	2,270	247	72	42	35
15	132	181	96	554	341	334	980	2,330	224	69	41	36
16	118	278	97	1,830	319	352	900	2,300	212	69	40	35
17	89	162	129	942	318	387	990	2,270	201	71	40	35
18	74	130	314	762	313	359	930	2,200	188	72	40	36
19	64	131	657	539	304	362	810	1,770	180	68	40	48
20	59	117	507	417	301	376	690	1,400	176	69	39	74
21	55	106	899	355	313	366	650	1,160	171	72	39	49
22	54	99	1,830	309	326	334	840	1,100	165	68	41	53
23	52	91	880	280	325	331	1,040	1,020	159	65	41	85
24	51	91	650	264	941	338	1,300	1,110	150	62	43	62
25	50	88	470	247	1,190	366	1,660	931	144	60	45	56
26	49	120	375	229	1,230	398	1,950	743	139	58	44	48
27	49	171	339	213	1,120	422	2,280	714	131	55	42	44
28	49	133	291	205	948	410	2,040	751	125	53	42	42
29	50	125	252	210	------	380	1,750	790	120	51	40	41
30	49	118	229	205	------	362	1,510	809	114	49	39	40
31	50	------	206	198	------	355	------	751	------	47	39	------
TOTAL	1,818	3,549	9,528	10,713	12,668	12,886	30,295	41,399	8,471	2,288	1,311	1,302
MEAN	58.6	118	307	346	452	416	1,010	1,335	282	73.8	42.3	43.4
MAX	132	278	1,830	1,830	1,230	830	2,280	2,330	630	108	47	85
MIN	34	51	80	133	186	331	288	714	114	47	39	35
AC-FT	3,610	7,040	18,900	21,250	25,130	25,560	60,090	82,110	16,800	4,540	2,600	2,580

CAL YR 1972 TOTAL 146,782 MEAN 401 MAX 2,930 MIN 33 AC-FT 291,100
WTR YR 1973 TOTAL 136,228 MEAN 373 MAX 2,330 MIN 34 AC-FT 270,200

PEAK DISCHARGE (BASE, 1,900 CFS)

DATE	TIME	G.H.	DISCHARGE	DATE	TIME	G.H.	DISCHARGE
12-22	0200	5.86	2,840	4-27	unknown	5.71	2,660
1-16	0800	5.73	2,690	5-14	2000	5.76	2,720

11525400 CLAIR ENGLE LAKE NEAR LEWISTON, CALIF.

LOCATION.--Lat 40°48'05", long 122°45'44", in NW¼SW¼ sec.15, T.34 N., R.8 W., Trinity County, Trinity National Forest, on side of intake structure of Trinity Dam on Trinity River, 9 miles north of Lewiston.

DRAINAGE AREA.--692 sq mi.

PERIOD OF RECORD.--November 1960 to current year. Prior to October 1963 published as Trinity Lake near Lewiston.

GAGE.--Water-stage recorder. Datum of gage is at mean sea level (levels by Bureau of Reclamation). Prior to Jan. 4, 1962, nonrecording gage at same site and datum.

EXTREMES.--Current year: Maximum contents, 2,404,000 acre-ft June 8 (elevation, 2,367.34 ft); minimum, 1,819,000 acre-ft Nov. 8-12 (elevation, 2,328.05 ft).
Period of record: Maximum contents, 2,548,600 acre-ft Apr. 15, 1963 (elevation, 2,376.02 ft); minimum since lake first filled, 1,305,600 acre-ft Dec. 9, 1968 (elevation, 2,286.22 ft).

REMARKS.--The lake is formed by an earthfill dam completed in November 1960. Storage began Nov. 23, 1960. Usable capacity, 2,437,700 acre-ft between elevations 1,995.5 ft (elevation of invert of river outlets) and 2,370.0 ft (gross pool elevation) above mean sea level. Dead storage, 10,000 acre-ft. Records, including extremes, represent total contents at 2400 hours.

COOPERATION.--Records furnished by Bureau of Reclamation, rounded to Geological Survey standards.

CAPACITY TABLE (ELEVATION, IN FEET, AND CONTENTS, IN ACRE-FEET)

1,960	670	2,100	162,231
1,970	1,894	2,140	292,850
1,980	4,131	2,190	529,611
2,000	12,373	2,250	955,140
2,020	26,436	2,310	1,583,590
2,040	47,023	2,380	2,616,990
2,070	92,906		

CONTENTS, IN THOUSANDS OF ACRE-FEET, AT 2400, WATER YEAR OCTOBER 1972 TO SEPTEMBER 1973

DAY	OCT	NOV	DEC	JAN	FEB	MAR	APR	MAY	JUN	JUL	AUG	SEP
1	1,906	1,823	1,836	1,908	2,045	2,138	2,130	2,222	2,395	2,333	2,186	2,021
2	1,904	1,822	1,836	1,909	2,046	2,145	2,128	2,231	2,397	2,328	2,180	2,015
3	1,900	1,822	1,837	1,910	2,046	2,151	2,125	2,239	2,399	2,324	2,175	2,010
4	1,897	1,822	1,837	1,911	2,049	2,156	2,122	2,247	2,400	2,320	2,170	2,005
5	1,894	1,821	1,838	1,911	2,052	2,160	2,120	2,254	2,402	2,315	2,164	1,999
6	1,891	1,821	1,838	1,912	2,055	2,165	2,120	2,261	2,403	2,310	2,158	1,995
7	1,888	1,820	1,838	1,912	2,058	2,169	2,122	2,269	2,403	2,306	2,153	1,991
8	1,884	1,819	1,837	1,914	2,060	2,172	2,124	2,278	2,404	2,301	2,148	1,986
9	1,882	1,819	1,837	1,916	2,063	2,174	2,127	2,286	2,403	2,297	2,142	1,983
10	1,879	1,819	1,837	1,917	2,066	2,173	2,134	2,292	2,402	2,292	2,137	1,979
11	1,878	1,819	1,836	1,922	2,070	2,172	2,141	2,295	2,400	2,288	2,132	1,975
12	1,876	1,819	1,835	1,928	2,073	2,169	2,146	2,301	2,398	2,283	2,127	1,971
13	1,873	1,822	1,834	1,938	2,075	2,166	2,151	2,309	2,394	2,279	2,121	1,966
14	1,871	1,823	1,833	1,945	2,078	2,166	2,154	2,319	2,391	2,275	2,116	1,962
15	1,870	1,826	1,832	1,954	2,080	2,166	2,157	2,330	2,387	2,270	2,111	1,958
16	1,869	1,831	1,833	1,978	2,081	2,165	2,160	2,341	2,384	2,266	2,105	1,954
17	1,868	1,832	1,834	1,992	2,082	2,163	2,162	2,353	2,380	2,261	2,099	1,949
18	1,866	1,833	1,839	2,004	2,083	2,160	2,164	2,363	2,378	2,256	2,094	1,945
19	1,863	1,834	1,848	2,012	2,083	2,158	2,164	2,370	2,375	2,251	2,088	1,943
20	1,860	1,834	1,853	2,018	2,084	2,156	2,164	2,375	2,373	2,246	2,083	1,939
21	1,857	1,835	1,864	2,022	2,084	2,155	2,164	2,378	2,370	2,240	2,077	1,935
22	1,854	1,835	1,881	2,026	2,085	2,152	2,166	2,381	2,367	2,235	2,070	1,933
23	1,852	1,835	1,889	2,029	2,085	2,150	2,169	2,383	2,363	2,230	2,064	1,929
24	1,849	1,834	1,894	2,032	2,092	2,148	2,173	2,386	2,359	2,225	2,058	1,926
25	1,846	1,834	1,898	2,034	2,100	2,146	2,178	2,387	2,356	2,221	2,054	1,923
26	1,842	1,835	1,900	2,036	2,109	2,144	2,186	2,387	2,354	2,217	2,053	1,919
27	1,839	1,835	1,902	2,038	2,121	2,141	2,194	2,388	2,350	2,213	2,048	1,916
28	1,836	1,836	1,904	2,040	2,130	2,139	2,204	2,389	2,347	2,207	2,043	1,912
29	1,833	1,836	1,905	2,042	------	2,137	2,210	2,390	2,342	2,202	2,038	1,908
30	1,829	1,836	1,905	2,044	------	2,136	2,214	2,392	2,337	2,196	2,032	1,904
31	1,826	------	1,907	2,044	------	2,133	------	2,393	------	2,190	2,027	------
MAX	1,906	1,836	1,907	2,044	2,130	2,174	2,214	2,393	2,404	2,333	2,186	2,021
MIN	1,826	1,819	1,832	1,908	2,045	2,133	2,120	2,222	2,337	2,190	2,027	1,904
(a)	2,328.60	2,329.28	2,334.41	2,343.99	2,349.74	2,349.94	2,355.27	2,366.68	2,363.19	2,353.73	2,342.77	2,334.23
(b)	-87.0	+10.0	+71.0	+137.0	+86.0	+3.0	+81.0	+179.0	-56.0	-147.0	-163.0	-123.0
(c)	1,670	320	--	--	--	--	4,870	7,410	8,950	9,970	8,760	5,040

CAL YR 1972 b -22.9
WTR YR 1973 b -9.0

a Elevation, in feet, at end of month.
b Change in contents, in thousands of acre-feet.
c Evaporation, in acre-feet.

11525430 JUDGE FRANCIS CARR POWERPLANT NEAR FRENCH GULCH, CALIF.

LOCATION.--Lat 40°38'49", long 122°37'34", (unsurveyed), Shasta County, at powerplant 1.6 miles downstream from Mill Creek, and 3.8 miles south of French Gulch.

PERIOD OF RECORD.--April 1963 to current year.

GAGE.--Recorded powerplant output.

AVERAGE DISCHARGE.--10 years, 1,700 cfs (1,232,000 acre-ft per year).

EXTREMES.--Period of record: Maximum daily discharge, 3,910 cfs Feb. 11, 1970; no flow for several days in 1963, 1966, 1969, 1972.

REMARKS.--Water is diverted from Trinity River at NW¼SE¼ sec.8, T.33 N., R.8 W., through a tunnel to powerplant and then into Whiskeytown Lake (see sta 11371700). See schematic diagram of Pit and McCloud River basins.

COOPERATION.--Records furnished by Bureau of Reclamation, rounded to Geological Survey standards.

DISCHARGE, IN CUBIC FEET PER SECOND, WATER YEAR OCTOBER 1972 TO SEPTEMBER 1973

DAY	OCT	NOV	DEC	JAN	FEB	MAR	APR	MAY	JUN	JUL	AUG	SEP
1	3,260	1,390	338	374	828	371	2,830	427	2,250	2,530	2,490	2,520
2	1,490	852	369	379	831	320	2,840	350	1,940	2,530	2,480	2,540
3	1,490	755	375	456	883	270	2,840	383	1,730	2,510	2,490	2,520
4	1,390	743	328	403	1,320	264	2,840	350	1,740	2,520	2,490	2,480
5	1,390	775	337	390	1,340	320	2,850	346	1,730	2,520	2,480	2,480
6	1,390	777	329	388	1,320	319	2,880	354	2,210	2,630	2,480	1,880
7	1,390	775	330	393	1,370	422	1,840	420	2,300	2,520	2,480	1,820
8	1,490	776	350	398	1,420	675	1,820	356	2,310	2,520	2,480	1,870
9	1,490	777	351	392	1,840	1,240	1,880	351	2,310	2,520	2,480	1,820
10	1,480	777	351	385	2,320	2,590	133	1,040	2,550	2,520	2,490	1,880
11	1,590	779	352	398	1,400	3,080	808	3,280	2,550	2,520	2,460	1,850
12	1,580	301	861	776	1,400	3,080	1,770	3,280	2,560	2,530	2,510	1,880
13	1,390	365	833	595	1,400	2,760	1,840	3,310	2,550	2,530	2,500	1,910
14	1,390	302	834	457	1,400	1,730	1,840	3,300	2,550	2,530	2,570	1,910
15	1,390	432	838	452	1,410	1,900	1,840	3,300	2,550	2,510	2,530	1,810
16	1,300	534	839	598	1,400	1,790	1,760	3,300	2,550	2,510	2,420	1,770
17	1,300	385	840	965	1,400	2,570	2,400	3,290	2,550	2,520	2,500	1,670
18	1,300	372	843	759	1,400	2,560	2,290	3,290	2,550	2,490	2,500	1,700
19	1,300	375	880	695	1,380	2,560	2,290	3,290	2,520	2,400	2,530	1,820
20	1,300	374	993	468	1,380	2,570	2,290	3,290	2,530	2,600	2,530	1,770
21	1,300	367	1,090	425	1,250	2,690	2,290	3,290	2,530	2,410	2,580	1,760
22	1,300	366	1,090	426	1,260	2,690	2,300	3,290	2,530	2,420	2,540	1,950
23	1,310	364	1,010	357	1,260	2,580	2,330	3,250	2,490	2,480	2,460	1,980
24	1,390	368	1,010	356	1,260	2,580	2,330	3,290	2,530	2,420	2,490	1,770
25	1,490	371	1,010	366	1,290	2,580	2,320	3,290	2,530	2,460	2,280	1,490
26	1,490	368	857	357	1,480	2,600	2,310	3,290	2,530	2,460	148	1,760
27	1,490	369	877	363	734	2,680	2,130	3,290	2,500	2,500	2,400	1,770
28	1,490	367	865	356	370	2,680	2,300	3,290	2,540	2,500	2,580	1,770
29	1,490	367	850	364	------	2,680	2,320	3,290	2,530	2,500	2,520	1,760
30	1,490	336	858	357	------	2,680	2,270	3,290	2,530	2,560	2,550	1,760
31	1,390	------	374	815	------	2,680	------	3,290	------	2,490	2,560	------
TOTAL	45,730	16,259	21,462	14,663	36,346	60,511	64,781	73,457	71,770	77,660	74,998	57,670
MEAN	1,475	542	692	473	1,298	1,952	2,159	2,370	2,392	2,505	2,419	1,922
MAX	3,260	1,390	1,090	965	2,320	3,080	2,880	3,310	2,560	2,630	2,580	2,540
MIN	1,300	301	328	356	370	264	133	346	1,730	2,400	148	1,490
AC-FT	90,710	32,250	42,570	29,080	72,090	120,000	128,500	145,700	142,400	154,000	148,800	114,400

CAL YR 1972 TOTAL 571,404.00 MEAN 1,561 MAX 3,360 MIN .0 AC-FT 1,133,000
WTR YR 1973 TOTAL 615,307.00 MEAN 1,686 MAX 3,310 MIN 133 AC-FT 1,220,000

11525500 TRINITY RIVER AT LEWISTON, CALIF.

LOCATION.--Lat 40°43'10", long 122°48'09", in SW¼NW¼ sec.17, T.33 N., R.8 W., Trinity County, on right bank 400 ft upstream from Deadwood Creek, and 0.8 mile northeast of Lewiston.

DRAINAGE AREA.--719 sq mi.

PERIOD OF RECORD.--August 1911 to current year.

GAGE.--Water-stage recorder. Altitude of gage is 1,810 ft (from topographic map). Prior to Oct. 16, 1930, nonrecording gage and Oct. 16, 1930, to Sept. 30, 1958, water-stage recorder, at site 1.1 miles downstream at different datum. Oct. 1, 1958, to July 6, 1964, water-stage recorder at site 0.8 mile downstream at different datum.

AVERAGE DISCHARGE (adjusted for storage, evaporation, and diversion).--62 years, 1,696 cfs (1,229,000 acre-ft per year).

EXTREMES.--Current year: Maximum discharge, 644 cfs July 28 (gage height, 4.19 ft); minimum daily, 144 cfs Mar. 1.

Period of record: Maximum discharge, 71,600 cfs Dec. 22, 1955 (gage height, 27.3 ft, from floodmarks, site and datum then in use); minimum, 23 cfs July 30, 1924. Maximum discharge since construction of Lewiston Dam in 1960, 12,700 cfs Apr. 20, 1963 (gage height, 12.38 ft); minimum daily, 125 cfs July 8, 1969.

Flood of December 1861 reached a stage of 21.6 ft, from floodmarks, at site 1.1 miles downstream at different datum (discharge, not determined).

REMARKS.--Records excellent. Flow regulated by Clair Engle Lake (see sta 11525400) beginning in November 1960. Diversion to Judge Francis Carr powerplant (see sta 11525430), began in April 1963. Small diversions above head of Trinity Lake for irrigation, power, and placer mining. Records of chemical analyses and water temperatures for the current year are published in Part 2 of this report.

REVISIONS (WATER YEARS).--WSP 331: 1911-12. WSP 1181: 1949. WSP 1929: Drainage area.

DISCHARGE, IN CUBIC FEET PER SECOND, WATER YEAR OCTOBER 1972 TO SEPTEMBER 1973

DAY	OCT	NOV	DEC	JAN	FEB	MAR	APR	MAY	JUN	JUL	AUG	SEP
1	203	254	174	155	154	144	158	155	150	156	172	209
2	203	253	154	154	154	147	157	155	150	156	160	210
3	202	257	155	154	155	147	156	155	149	156	160	211
4	201	257	155	154	157	147	156	155	150	156	160	209
5	203	258	155	154	157	147	155	155	151	156	160	210
6	203	258	156	155	158	148	154	155	152	156	160	209
7	203	258	156	155	158	150	153	155	155	155	161	209
8	203	257	156	155	158	150	153	155	155	156	161	209
9	206	258	156	156	159	150	153	155	155	156	161	209
10	207	258	156	156	158	148	152	155	155	156	162	209
11	204	258	156	163	157	145	153	155	154	157	162	208
12	201	258	158	160	157	147	154	156	154	155	162	209
13	201	258	157	159	156	148	155	156	154	155	161	208
14	201	258	156	158	157	148	155	155	153	155	160	208
15	234	227	156	160	156	258	154	155	153	155	160	208
16	254	203	159	167	156	348	155	155	153	155	160	208
17	255	200	161	161	155	343	156	155	154	155	161	210
18	255	200	161	161	155	339	155	155	154	156	161	211
19	258	200	161	156	155	338	155	155	154	156	161	214
20	258	200	158	155	155	343	155	155	154	156	160	211
21	259	200	158	154	155	346	156	155	154	155	160	212
22	261	200	156	153	156	341	156	153	154	155	161	214
23	261	200	155	153	157	339	157	153	155	155	162	210
24	260	200	155	154	155	339	157	153	154	155	163	208
25	259	200	156	154	155	338	156	153	154	156	159	208
26	259	200	155	154	152	338	156	153	154	156	159	209
27	258	200	156	154	150	343	158	152	156	157	164	210
28	258	200	155	154	148	348	159	153	156	602	163	211
29	255	200	155	154	------	347	159	153	156	491	163	211
30	254	200	155	154	------	282	160	152	156	370	163	212
31	254	------	155	154	------	158	------	152	------	252	178	------
TOTAL	7,193	6,830	4,867	4,840	4,355	7,554	4,668	4,784	4,608	5,918	5,020	6,294
MEAN	232	228	157	156	156	244	156	154	154	191	162	210
MAX	261	258	174	167	159	348	160	156	156	602	178	214
MIN	201	200	154	153	148	144	152	152	149	155	159	208
AC-FT	14,270	13,550	9,650	9,600	8,640	14,980	9,260	9,490	9,140	11,740	9,960	12,480
MEAN a	330	932	2,006	2,869	2,994	2,260	3,756	5,560	1,755	468	61.3	158
AC-FT a	20,270	55,430	123,300	176,400	166,300	138,900	223,500	341,900	104,400	28,800	3,770	9,390

CAL YR 1972 TOTAL 62,223 MEAN 170 MAX 261 MIN 147 AC-FT 123,400 MEAN a 1,761 AC-FT a 1,278,000
WTR YR 1973 TOTAL 66,931 MEAN 183 MAX 602 MIN 144 AC-FT 132,800 MEAN a 1,923 AC-FT a 1,392,000

a Adjusted for change in contents, diversions, and evaporation from Clair Engle Lake. Data furnished by Bureau of Reclamation.

11526500 NORTH FORK TRINITY RIVER AT HELENA, CALIF.

LOCATION.--Lat 40°46'55", long 123°07'38", in SW¼SW¼ sec.21, T.34 N., R.11 W., Trinity County, on right bank 500 ft downstream from East Fork of North Fork Trinity River, 0.6 mile north of Helena, 1.0 mile upstream from mouth, and 6 miles northwest of Junction City.

DRAINAGE AREA.--151 sq mi.

PERIOD OF RECORD.--August 1911 to September 1913, January 1957 to current year.

GAGE.--Water-stage recorder. Altitude of gage is 1,380 ft (from topographic map). August 1911 to September 1913, at site 0.8 mile downstream at different datum.

AVERAGE DISCHARGE.--18 years, 435 cfs (315,200 acre-ft per year).

EXTREMES.--Current year: Maximum discharge, 3,590 cfs Jan. 16 (gage height, 12.99 ft); minimum daily, 21 cfs Sept. 14-18.
Period of record: Maximum discharge, 35,800 cfs Dec. 22, 1964 (gage height, 27.93 ft, from floodmarks), from rating curve extended above 9,000 cfs on basis of slope-area measurement of maximum flow; minimum daily, 7.5 cfs Sept. 26, 1964.

REMARKS.--No known regulation or diversion above station.

COOPERATION.--Records furnished by California Department of Water Resources and reviewed by Geological Survey.

REVISIONS (WATER YEARS).--WSP 1565: 1912-13.

DISCHARGE, IN CUBIC FEET PER SECOND, WATER YEAR OCTOBER 1972 TO SEPTEMBER 1973

DAY	OCT	NOV	DEC	JAN	FEB	MAR	APR	MAY	JUN	JUL	AUG	SEP
1	39	45	165	353	377	891	458	601	415	113	31	23
2	36	59	156	326	364	786	445	616	332	101	30	23
3	33	126	177	293	358	712	439	617	310	98	29	23
4	31	389	165	263	418	627	450	584	270	99	27	23
5	30	235	142	244	726	569	522	510	280	103	26	22
6	29	150	146	230	717	595	650	511	308	97	25	22
7	29	205	137	214	648	590	721	523	316	90	24	22
8	28	168	87	209	594	573	713	505	320	85	24	22
9	38	178	120	220	580	550	766	513	304	81	24	22
10	61	199	116	224	690	604	802	506	261	78	24	22
11	154	231	115	508	684	645	861	529	250	80	26	22
12	104	194	162	1,360	620	585	851	608	244	94	29	22
13	90	200	144	2,470	548	534	799	730	221	86	28	22
14	90	242	116	1,630	527	485	688	868	187	77	27	21
15	105	215	115	1,380	500	457	632	874	160	70	26	21
16	147	280	178	2,900	474	455	610	857	152	66	26	21
17	122	249	1,240	1,950	462	442	623	862	144	67	26	21
18	103	217	1,620	1,610	445	421	547	822	134	72	25	21
19	88	238	2,090	1,290	431	434	485	701	141	69	25	35
20	76	242	1,570	1,000	416	443	447	576	160	81	24	76
21	66	216	1,690	831	408	450	430	514	183	65	23	43
22	64	209	2,500	703	404	437	459	500	185	57	23	46
23	60	196	1,580	626	394	444	545	483	163	52	23	195
24	57	182	1,250	581	557	457	589	593	139	46	24	198
25	52	165	945	531	838	476	666	503	146	41	26	138
26	48	198	733	482	1,030	505	855	381	174	38	25	79
27	46	270	650	451	1,160	521	934	345	166	38	23	57
28	44	211	571	425	955	494	874	381	156	37	23	46
29	43	194	499	415	------	466	771	403	151	36	23	40
30	40	176	444	403	------	490	650	455	135	35	23	36
31	39	------	395	397	------	477	------	465	------	32	23	------
TOTAL	1,992	6,079	20,018	24,519	16,325	16,615	19,282	17,936	6,507	2,184	785	1,384
MEAN	64.3	203	646	791	583	536	643	579	217	70.5	25.3	46.1
MAX	154	389	2,500	2,900	1,160	891	934	874	415	113	31	198
MIN	28	45	87	209	358	421	430	345	134	32	23	21
AC-FT	3,950	12,060	39,710	48,630	32,380	32,960	38,250	35,580	12,910	4,330	1,560	2,750

CAL YR 1972 TOTAL 176,633 MEAN 483 MAX 8,550 MIN 26 AC-FT 350,400
WTR YR 1973 TOTAL 133,626 MEAN 366 MAX 2,900 MIN 21 AC-FT 265,000

11527000 TRINITY RIVER NEAR BURNT RANCH, CALIF.

LOCATION.--Lat 40°47'20", long 123°26'20", in S½ sec.19, T.5 N., R.7 E., Trinity County, Trinity National Forest, on left bank 500 ft upstream from Cedar Flat Creek, 700 ft upstream from highway bridge at Cedar Flat, and 2.3 miles southeast of town of Burnt Ranch.

DRAINAGE AREA.--1,439 sq mi.

PERIOD OF RECORD.--October 1931 to September 1940, October 1956 to current year. Monthly discharge only for some periods, published in WSP 1315-B.

GAGE.--Water-stage recorder. Datum of gage is 944.05 ft above mean sea level. Oct. 1, 1931, to Jan. 19, 1940, at site 2 miles upstream at different datum.

AVERAGE DISCHARGE.--13 years (1931-40, 1956-60), 2,785 cfs (2,016,000 acre-ft per year); 13 years (1960-73), 1,601 cfs (1,160,000 acre-ft per year).

EXTREMES.--Current year: Maximum discharge, 8,820 cfs Jan. 13 (gage height, 10.16 ft); minimum daily, 230 cfs Aug. 22, 23, 31.

Period of record: Maximum discharge, 81,500 cfs Feb. 25, 1958 (gage height, 30.50 ft), from rating curve extended above 40,000 cfs on basis of slope-area measurement at gage height 43.2 ft; minimum, 82 cfs Aug. 31, 1939.

Flood of Dec. 22, 1955, reached a stage of 43.2 ft, from floodmarks (discharge, 172,000 cfs, on basis of slope-area measurement of maximum flow).

REMARKS.--Records good except those for period of no gage-height record, which are fair. Flow regulated by Clair Engle Lake 64 miles upstream since November 1960 (see sta 11525400). Small diversions above station for mining and irrigation. Records of water temperatures for the current year are published in Part 2 of this report.

DISCHARGE, IN CUBIC FEET PER SECOND, WATER YEAR OCTOBER 1972 TO SEPTEMBER 1973

DAY	OCT	NOV	DEC	JAN	FEB	MAR	APR	MAY	JUN	JUL	AUG	SEP
1	361	453	731	1,270	1,560	3,450	2,000	1,950	1,510	543	388	233
2	352	475	694	1,200	1,510	3,100	1,900	1,910	1,250	505	316	273
3	346	495	703	1,140	1,480	2,850	1,800	1,920	1,180	489	288	278
4	337	1,090	752	1,060	1,600	2,750	1,690	1,870	1,100	482	280	278
5	334	937	668	998	3,520	2,500	1,740	1,710	1,070	484	268	275
6	331	724	679	959	3,360	2,500	1,980	1,650	1,110	474	263	275
7	328	773	654	915	3,140	2,450	2,160	1,670	1,150	459	260	275
8	331	812	589	891	2,960	2,300	2,140	1,630	1,130	442	255	278
9	370	741	485	948	2,790	2,230	2,200	1,640	1,120	429	255	278
10	406	892	545	972	3,530	2,230	2,300	1,610	1,020	419	255	275
11	567	980	576	2,230	3,590	2,450	2,510	1,620	955	412	253	273
12	593	960	638	4,970	3,180	2,300	2,560	1,740	934	433	253	273
13	539	862	615	7,860	2,810	2,150	2,520	2,020	885	429	248	273
14	503	1,440	557	5,820	2,660	2,050	2,280	2,390	810	406	245	270
15	536	1,250	541	4,210	2,610	1,900	2,090	2,520	751	388	243	275
16	858	1,700	603	7,660	2,400	1,800	2,020	2,490	714	376	235	275
17	758	1,550	2,510	8,060	2,240	1,800	2,040	2,540	695	376	235	275
18	664	1,170	3,310	7,870	2,100	1,750	1,910	2,530	666	388	238	278
19	595	1,020	4,270	6,750	1,990	1,830	1,750	2,290	660	385	238	304
20	555	961	4,480	4,880	1,890	1,950	1,640	1,890	687	385	235	422
21	526	875	4,220	3,930	1,810	1,980	1,570	1,680	729	388	233	388
22	509	850	5,620	3,130	1,760	1,980	1,580	1,630	738	361	230	391
23	502	803	4,990	2,680	1,700	1,930	1,750	1,610	694	346	230	551
24	495	769	3,990	2,440	2,000	1,950	1,860	1,720	640	337	235	645
25	482	737	2,970	2,320	3,600	2,050	1,980	1,870	620	325	245	692
26	505	738	2,370	2,080	3,600	2,000	2,340	1,400	662	316	245	497
27	494	839	2,090	1,900	4,640	1,950	2,710	1,250	658	307	240	423
28	468	811	1,930	1,780	3,900	1,880	2,650	1,310	629	301	243	391
29	457	785	1,670	1,730	------	1,800	2,440	1,330	614	564	240	375
30	448	756	1,500	1,700	------	2,000	2,130	1,480	583	548	233	362
31	443	------	1,370	1,650	------	2,250	------	1,470	------	468	230	------
TOTAL	14,993	27,248	57,320	96,003	73,930	68,110	62,240	56,340	25,964	12,965	7,855	10,351
MEAN	484	908	1,849	3,097	2,640	2,197	2,075	1,817	865	418	253	345
MAX	858	1,700	5,620	8,060	4,640	3,450	2,710	2,540	1,510	564	388	692
MIN	328	453	485	891	1,480	1,750	1,570	1,250	583	301	230	233
AC-FT	29,740	54,050	113,700	190,400	146,600	135,100	123,500	111,800	51,500	25,720	15,580	20,530

CAL YR 1972 TOTAL 539,488 MEAN 1,474 MAX 20,900 MIN 240 AC-FT 1,070,000
WTR YR 1973 TOTAL 513,319 MEAN 1,406 MAX 8,060 MIN 230 AC-FT 1,018,000

NOTE.--No gage-height record Feb. 24 to Apr. 3.

11528500 HAYFORK CREEK NEAR HYAMPOM, CALIF.

LOCATION.--Lat 40°37'34", long 123°26'01", in SE¼NW¼ sec.19, T.3 N., R.7 E., Trinity County, Trinity National Forest, on right bank 1.2 miles upstream from mouth, and 1.3 miles northeast of Hyampom.

DRAINAGE AREA.--378 sq mi.

PERIOD OF RECORD.--August 1953 to current year.

GAGE.--Water-stage recorder. Datum of gage is 1,270.67 ft above mean sea level.

AVERAGE DISCHARGE.--20 years, 525 cfs (380,400 acre-ft per year).

EXTREMES.--Current year: Maximum discharge, 11,100 cfs Jan. 16 (gage height, 12.57 ft); minimum daily, 19 cfs Aug. 16, 21, 23.
Period of record: Maximum discharge, 28,800 cfs Dec. 22, 1964 (gage height, 19.14 ft), from rating curve extended above 11,000 cfs on basis of slope-area measurement at gage height 18.00 ft; minimum daily, 16 cfs Aug. 26, Sept. 27, Oct. 4, 5, 1964.

REMARKS.--Records good. No regulation; diversions for irrigation of about 700 acres above station. Records of water temperatures for the current year are published in Part 2 of this report.

REVISIONS (WATER YEARS).--WSP 1395: 1954(M).

DISCHARGE, IN CUBIC FEET PER SECOND, WATER YEAR OCTOBER 1972 TO SEPTEMBER 1973

DAY	OCT	NOV	DEC	JAN	FEB	MAR	APR	MAY	JUN	JUL	AUG	SEP
1	50	63	154	448	600	1,720	855	380	168	70	27	26
2	48	67	148	412	570	1,460	790	364	153	70	29	26
3	47	74	151	385	560	1,360	740	352	145	70	30	24
4	43	176	182	356	752	1,260	700	344	138	67	22	22
5	39	195	173	324	2,020	1,150	758	332	131	63	24	22
6	37	151	173	312	1,680	1,200	806	312	120	62	26	24
7	37	195	166	284	1,570	1,140	830	304	118	60	26	26
8	35	260	148	280	1,460	1,140	782	288	114	60	27	29
9	48	215	296	296	1,420	1,070	776	276	111	60	30	26
10	74	296	398	300	2,100	1,080	764	264	110	58	32	22
11	98	457	407	1,600	1,890	1,170	794	260	108	54	35	24
12	96	368	407	2,910	1,610	1,070	782	253	105	58	29	24
13	83	308	296	3,750	1,350	983	764	250	104	58	26	22
14	78	644	229	2,470	1,280	890	686	239	106	54	27	22
15	83	480	163	2,140	1,210	830	626	236	105	50	32	24
16	179	600	202	7,620	1,090	800	590	229	102	47	19	26
17	151	466	2,090	4,480	990	770	590	234	103	45	22	26
18	119	356	2,050	3,920	908	740	565	219	102	47	24	26
19	103	308	2,630	2,850	848	750	525	206	105	43	21	29
20	91	272	1,840	2,050	788	820	490	200	103	43	21	45
21	81	243	1,540	1,660	747	820	461	193	99	47	19	39
22	78	225	2,700	1,300	710	780	448	189	94	45	21	43
23	74	205	2,070	1,080	680	775	457	178	92	45	19	52
24	71	192	1,710	983	1,130	775	452	183	90	45	21	50
25	67	179	1,220	948	2,070	810	457	190	88	47	24	50
26	65	170	941	830	2,100	820	466	184	89	47	26	45
27	60	176	854	752	2,250	800	475	176	83	43	26	41
28	60	182	782	692	1,980	760	452	172	78	48	27	39
29	60	170	644	680	------	720	430	162	75	52	26	37
30	60	160	560	674	------	810	403	154	72	43	26	37
31	60	------	495	656	------	910	------	162	------	26	24	------
TOTAL	2,275	7,853	25,819	47,442	36,363	30,183	18,714	7,485	3,211	1,627	788	948
MEAN	73.4	262	833	1,530	1,299	974	624	241	107	52.5	25.4	31.6
MAX	179	644	2,700	7,620	2,250	1,720	855	380	168	70	35	52
MIN	35	63	148	280	560	720	403	154	72	26	19	22
AC-FT	4,510	15,580	51,210	94,100	72,130	59,870	37,120	14,850	6,370	3,230	1,560	1,880

CAL YR 1972 TOTAL 148,263 MEAN 405 MAX 5,520 MIN 21 AC-FT 294,100
WTR YR 1973 TOTAL 182,708 MEAN 501 MAX 7,620 MIN 19 AC-FT 362,400

PEAK DISCHARGE (BASE, 4,000 CFS).--Jan. 13 (0315) 4,340 cfs (8.70 ft); Jan. 16 (1145) 11,100 cfs (12.57 ft).

11528700 SOUTH FORK TRINITY RIVER BELOW HYAMPOM, CALIF.

LOCATION.--Lat 40°39'00", long 123°29'35", in NW¼SW¼ sec.10, T.3 N., R.6 E., Trinity County, Trinity National Forest, on left bank 0.3 mile downstream from Big Creek, 3.0 miles northeast of Hyampom, and 3.5 miles downstream from Hayfork Creek.

DRAINAGE AREA.--764 sq mi.

PERIOD OF RECORD.--October 1965 to current year.

GAGE.--Water-stage recorder. Datum of gage is 1,211.37 ft above mean sea level.

AVERAGE DISCHARGE.--8 years, 1,561 cfs (1,131,000 acre-ft per year).

EXTREMES.--Current year: Maximum discharge, 25,800 cfs Jan. 16 (gage height, 17.62 ft); minimum daily, 38 cfs Sept. 14, 15.

Period of record: Maximum discharge, 59,100 cfs Jan. 24, 1970 (gage height, 24.62 ft), from rating curve extended above 23,000 cfs on basis of flood-routing study at gage height 30.45 ft; minimum daily, 38 cfs Sept. 14, 15, 1973.

Flood of Dec. 22, 1964, reached a stage of 30.45 ft, from floodmarks (discharge, 88,000 cfs on basis of flood-routing study).

REMARKS.--Records fair. No regulation or diversion above station. Records of water temperatures for the current year are published in Part 2 of this report.

DISCHARGE, IN CUBIC FEET PER SECOND, WATER YEAR OCTOBER 1972 TO SEPTEMBER 1973

DAY	OCT	NOV	DEC	JAN	FEB	MAR	APR	MAY	JUN	JUL	AUG	SEP
1	123	134	380	1,510	1,830	4,630	2,390	1,160	501	200	95	85
2	114	151	370	1,400	1,660	4,040	2,150	1,120	460	200	95	82
3	110	181	380	1,300	1,570	3,810	2,020	1,100	435	190	95	58
4	104	559	450	1,210	2,010	3,570	1,940	1,070	416	180	95	53
5	98	559	440	1,110	5,320	3,280	1,950	1,040	398	170	85	47
6	96	379	430	1,030	4,340	3,350	2,040	996	373	170	88	47
7	93	433	390	941	4,060	3,180	2,050	967	364	165	88	47
8	91	621	370	921	3,810	3,120	1,960	931	351	160	88	50
9	107	521	740	978	3,740	2,960	1,940	909	335	160	85	50
10	140	852	990	1,110	5,050	3,050	1,940	875	331	155	85	45
11	239	1,100	1,000	5,100	4,700	3,360	2,010	854	319	155	85	43
12	246	887	1,000	9,870	4,250	3,070	2,000	840	319	151	85	43
13	196	744	740	11,900	3,660	2,800	1,980	827	315	148	82	40
14	176	1,260	530	7,290	3,420	2,540	1,830	820	320	142	79	38
15	179	1,070	380	5,920	3,190	2,290	1,650	813	310	135	76	38
16	285	1,190	460	18,900	2,930	2,160	1,570	790	305	129	68	40
17	281	1,020	6,000	11,800	2,730	2,140	1,610	800	305	123	61	40
18	233	810	5,500	9,800	2,550	2,010	1,520	774	310	117	61	40
19	202	710	7,200	7,450	2,390	2,040	1,440	737	310	114	58	58
20	182	630	4,740	5,370	2,250	2,250	1,350	694	305	112	58	117
21	168	580	4,090	4,540	2,150	2,250	1,290	658	290	112	55	123
22	158	530	7,790	3,810	2,080	2,150	1,250	635	280	109	58	112
23	152	490	5,770	3,240	2,030	2,090	1,270	606	270	106	55	142
24	146	460	4,790	3,040	3,050	2,110	1,260	640	260	106	61	148
25	140	430	3,590	3,120	5,460	2,210	1,280	646	260	106	64	135
26	134	425	2,890	2,750	5,620	2,250	1,320	594	250	100	67	120
27	130	440	2,650	2,420	5,720	2,200	1,370	561	240	95	67	106
28	129	440	2,520	2,210	5,150	2,080	1,340	533	230	90	67	95
29	128	420	2,100	2,210	------	1,930	1,290	507	220	98	76	93
30	127	395	1,860	2,180	------	2,110	1,230	486	210	103	90	88
31	126	------	1,680	2,080	------	2,610	------	486	------	100	88	------
TOTAL	4,833	18,421	72,220	136,510	96,720	83,640	50,240	24,469	9,592	4,201	2,360	2,223
MEAN	156	614	2,330	4,404	3,454	2,698	1,675	789	320	136	76.1	74.1
MAX	285	1,260	7,790	18,900	5,720	4,630	2,390	1,160	501	200	95	148
MIN	91	134	370	921	1,570	1,930	1,230	486	210	90	55	38
AC-FT	9,590	36,540	143,200	270,800	191,800	165,900	99,650	48,530	19,030	8,330	4,680	4,410

CAL YR 1972 TOTAL 476,908 MEAN 1,303 MAX 17,600 MIN 57 AC-FT 945,900
WTR YR 1973 TOTAL 505,429 MEAN 1,385 MAX 18,900 MIN 38 AC-FT 1,003,000

PEAK DISCHARGE (BASE, 8,600 CFS)

DATE	TIME	G.H.	DISCHARGE	DATE	TIME	G.H.	DISCHARGE
12-18	unknown	12.55	12,400	1-13	0330	13.49	14,400
12-22	1130	11.14	8,850	1-16	1345	17.62	25,800

NOTE.--No gage-height record Nov. 19 to Dec. 18.

11529800 WILLOW CREEK NEAR WILLOW CREEK, CALIF.

LOCATION.--Lat 40°56'50", long 123°39'35", in SE¼SW¼ sec.30, T.7 N., R.5 E., Humboldt County, on right bank 0.1 mile upstream from Boise Creek, 1.5 miles northwest of town of Willow Creek, and 1.8 miles upstream from mouth.

DRAINAGE AREA.--41.0 sq mi.

PERIOD OF RECORD.--August 1959 to current year. Prior to October 1960, published as "at Willow Creek."

GAGE.--Water-stage recorder. Datum of gage is 585.54 ft above mean sea level. Aug. 13, 1959, to Dec. 22, 1964, at site 1.4 miles downstream at datum 85.55 ft lower.

AVERAGE DISCHARGE.--14 years, 175 cfs (126,800 acre-ft per year).

EXTREMES.--Current year: Maximum discharge, 1,450 cfs Dec. 22 (gage height, 6.98 ft); minimum daily, 3.8 cfs Sept. 12.
Period of record: Maximum discharge, 17,000 cfs Dec. 22, 1964 (gage height, 20.6 ft, present datum, from floodmarks); minimum daily, 3.8 cfs Sept. 12, 1973.

REMARKS.--Records good. No regulation; small diversion for irrigation of about 40 acres above station.

DISCHARGE, IN CUBIC FEET PER SECOND, WATER YEAR OCTOBER 1972 TO SEPTEMBER 1973

DAY	OCT	NOV	DEC	JAN	FEB	MAR	APR	MAY	JUN	JUL	AUG	SEP
1	10	20	22	191	230	308	570	85	40	25	15	7.8
2	10	19	21	170	277	284	418	85	39	24	15	7.3
3	10	29	60	152	481	319	319	85	39	24	15	6.7
4	10	91	178	144	439	291	270	87	38	24	15	6.5
5	10	59	122	133	409	277	242	81	36	23	14	6.2
6	10	33	251	130	363	269	251	77	35	23	14	6.2
7	10	42	185	121	376	262	240	77	35	23	14	8.6
8	10	32	117	121	494	245	200	75	34	23	14	8.6
9	12	33	78	140	463	240	191	74	32	19	13	6.2
10	17	67	58	165	440	426	190	69	32	13	13	5.4
11	17	100	47	590	380	350	188	67	32	15	13	5.4
12	18	83	40	922	487	284	181	62	32	16	13	3.8
13	16	78	34	948	368	259	168	60	31	16	12	4.6
14	15	94	60	630	342	282	157	57	31	13	12	4.6
15	13	67	57	484	312	254	148	56	31	13	12	5.4
16	13	61	196	712	285	323	144	53	32	14	12	6.2
17	13	45	714	613	264	458	175	52	38	15	11	6.2
18	13	49	768	720	243	361	153	50	33	14	11	6.5
19	13	124	802	613	228	1,380	147	48	32	14	11	26
20	12	111	582	432	205	1,190	139	47	31	13	11	41
21	11	79	585	534	190	908	127	46	31	16	8.6	22
22	11	81	1,060	481	172	703	122	46	30	15	9.4	47
23	11	63	789	422	160	511	122	46	30	15	9.4	98
24	10	48	726	432	255	371	117	59	29	17	10	127
25	9.6	40	608	466	302	314	113	53	28	17	11	129
26	9.4	35	504	423	340	260	113	48	28	17	11	55
27	9.0	32	443	370	302	228	112	46	27	17	9.7	39
28	10	28	402	332	311	201	103	44	26	17	9.3	30
29	12	25	327	323	------	180	98	42	25	16	8.6	26
30	10	23	277	299	------	792	91	42	25	16	7.8	23
31	9.5	------	230	313	------	458	------	41	------	16	7.8	------
TOTAL	364.5	1,691	10,343	12,526	9,118	12,988	5,609	1,860	962	543	362.6	775.2
MEAN	11.8	56.4	334	404	326	419	187	60.0	32.1	17.5	11.7	25.8
MAX	18	124	1,060	948	494	1,380	570	87	40	25	15	129
MIN	9.0	19	21	121	160	180	91	41	25	13	7.8	3.8
AC-FT	723	3,350	20,520	24,850	18,090	25,760	11,130	3,690	1,910	1,080	719	1,540

CAL YR 1972 TOTAL 74,899.5 MEAN 205 MAX 5,180 MIN 9.0 AC-FT 148,600
WTR YR 1973 TOTAL 57,142.3 MEAN 157 MAX 1,380 MIN 3.8 AC-FT 113,300

PEAK DISCHARGE (BASE, 1,700 CFS, REVISED).--No peak above base.

NOTE.--No gage-height record July 25 to Aug. 20.

11530000 TRINITY RIVER AT HOOPA, CALIF.

LOCATION.--Lat 41°03'00", long 123°40'15", in SE¼NW¼ sec.25, T.8 N., R.4 E., Humboldt County, in Hoopa Valley Indian Reservation, on left bank at Hoopa, 0.4 mile upstream from Supply Creek.

DRAINAGE AREA.--2,854 sq mi.

PERIOD OF RECORD.--October 1911 to January 1914, October 1916 to September 1918, October 1931 to current year. Monthly discharge only for some periods, published in WSP 1315-B. Published as "near Hoopa" 1931-60.

GAGE.--Water-stage recorder. Datum of gage is 274.82 ft above mean sea level. Prior to October 1931, nonrecording gage at site 0.4 mile upstream at different datum. October 1931 to Dec. 22, 1964, water-stage recorder at site 2.5 miles upstream at datum 31.67 ft higher.

AVERAGE DISCHARGE (unadjusted).--46 years (1911-13, 1916-18, 1931-73), 5,381 cfs (3,899,000 acre-ft per year).

EXTREMES.--Current year: Maximum discharge, 45,000 cfs Jan. 16 (gage height, 31.02 ft); minimum daily, 444 cfs Aug. 23.
Period of record: Maximum discharge, 231,000 cfs Dec. 22, 1964 (gage height, 57.0 ft, from floodmarks, present site and datum); minimum, 162 cfs Oct. 4, 1931.

REMARKS.--Records good. Flow regulated by Clair Engle Lake 84 miles upstream since November 1960 (see sta 11525400). Small diversions above station for mining and irrigation. Records of chemical analyses, water temperatures and suspended-sediment discharge for the current year are published in Part 2 of this report.

REVISIONS (WATER YEARS).--WSP 1565: 1913. WRD Calif. 1970: 1969.

DISCHARGE, IN CUBIC FEET PER SECOND, WATER YEAR OCTOBER 1972 TO SEPTEMBER 1973

DAY	OCT	NOV	DEC	JAN	FEB	MAR	APR	MAY	JUN	JUL	AUG	SEP
1	684	744	1,400	3,880	5,680	11,900	6,980	4,610	2,680	1,050	670	448
2	655	834	1,360	3,640	5,450	10,400	6,420	4,450	2,410	1,000	598	452
3	631	900	1,430	3,460	5,280	9,500	6,070	4,400	2,220	962	547	468
4	621	1,440	1,970	3,230	5,670	9,100	5,860	4,340	2,110	941	529	472
5	607	2,220	1,680	3,040	12,300	8,210	5,890	4,090	2,000	931	511	472
6	603	1,610	1,650	2,900	11,600	8,170	5,290	3,850	1,990	916	507	472
7	598	1,440	1,600	2,780	10,300	8,010	6,530	3,790	2,010	890	502	468
8	593	1,710	1,420	2,660	9,430	7,640	6,390	3,690	1,970	870	498	481
9	636	1,620	1,100	2,900	8,960	7,130	6,310	3,650	1,940	844	494	481
10	739	1,920	1,130	3,130	12,000	7,290	6,420	3,580	1,840	824	494	481
11	829	2,370	1,220	7,020	12,000	7,990	6,720	3,510	1,750	799	494	477
12	1,080	2,600	1,350	21,400	10,700	7,440	6,770	3,590	1,680	789	489	472
13	957	2,110	1,300	27,900	9,170	6,870	6,610	3,900	1,650	799	481	468
14	875	2,720	1,240	21,300	8,470	6,420	6,240	4,310	1,580	785	477	468
15	839	3,210	1,160	14,400	8,110	6,040	5,720	4,540	1,490	749	472	468
16	1,000	3,040	1,730	31,600	7,380	5,880	5,500	4,450	1,430	714	464	468
17	1,260	3,440	15,900	32,100	6,870	5,970	5,680	4,450	1,430	699	460	468
18	1,100	2,700	16,600	25,500	6,460	5,610	5,410	4,470	1,390	689	456	468
19	984	2,630	23,100	22,800	6,110	5,740	5,060	4,120	1,350	689	456	524
20	910	2,600	17,200	16,200	5,770	6,420	4,700	3,620	1,320	675	456	699
21	860	2,240	11,600	12,700	5,510	6,480	4,470	3,270	1,340	675	452	744
22	824	2,160	20,500	10,100	5,350	6,480	4,370	3,140	1,340	665	448	734
23	804	1,970	17,900	8,450	5,170	6,260	4,560	3,050	1,310	650	444	952
24	799	1,800	13,500	7,720	6,220	6,310	4,730	3,190	1,260	636	448	1,170
25	780	1,680	9,640	7,950	12,900	6,550	4,890	3,580	1,200	621	460	1,170
26	760	1,590	7,480	7,060	12,900	6,740	5,320	2,950	1,200	607	472	931
27	775	1,630	6,610	6,390	16,000	6,700	5,910	2,610	1,200	593	477	780
28	744	1,680	6,330	6,060	13,700	6,420	5,810	2,520	1,160	589	464	699
29	749	1,580	5,380	5,970	------	6,000	5,400	2,520	1,120	650	460	655
30	729	1,480	4,760	6,040	------	6,460	4,970	2,600	1,090	799	460	626
31	714	------	4,300	6,060	------	7,500	------	2,630	------	734	452	------
TOTAL	24,739	59,668	203,540	336,340	245,460	223,630	172,000	113,470	48,460	23,834	15,092	18,136
MEAN	798	1,989	6,566	10,850	8,766	7,214	5,733	3,660	1,615	769	487	605
MAX	1,260	3,440	23,100	32,100	16,000	11,900	6,980	4,610	2,680	1,050	670	1,170
MIN	593	744	1,100	2,660	5,170	5,610	4,370	2,520	1,090	589	444	448
AC-FT	49,070	118,400	403,700	667,100	486,900	443,600	341,200	225,100	96,120	47,270	29,930	35,970

CAL YR 1972 TOTAL 1,841,205 MEAN 5,031 MAX 85,200 MIN 461 AC-FT 3,652,000
WTR YR 1973 TOTAL 1,484,369 MEAN 4,067 MAX 32,100 MIN 444 AC-FT 2,944,000

PEAK DISCHARGE (BASE, 22,000 CFS)

DATE	TIME	G.H.	DISCHARGE	DATE	TIME	G.H.	DISCHARGE
12-17	1800	26.04	25,400	1-13	1100	27.61	31,000
12-19	0545	26.36	26,500	1-16	1945	31.02	45,000
12-22	1730	25.68	24,200				

11530300 BLUE CREEK NEAR KLAMATH, CALIF.

LOCATION.--Lat 41°27'00", long 123°53'40", in NE¼NW¼ sec.12, T.12 N., R.2 E., Humboldt County, on left bank 600 ft downstream from West Fork, 3.0 miles upstream from mouth, and 9.2 miles southeast of Klamath.

DRAINAGE AREA.--120 sq mi.

PERIOD OF RECORD.--September 1965 to current year.

GAGE.--Water-stage recorder. Datum of gage is 140.65 ft above mean sea level.

AVERAGE DISCHARGE.--8 years, 767 cfs (555,700 acre-ft per year).

EXTREMES.--Current year: Maximum discharge, 12,700 cfs Dec. 17 (gage height, 13.86 ft), from rating curve extended as explained below; minimum daily, 60 cfs Sept. 14, 15, 17, 18.

Period of record: Maximum discharge, 33,000 cfs Mar. 2, 1972 (gage height, 18.10 ft), from rating curve extended above 1,000 cfs on basis of step-backwater computation at 21.55 ft; minimum daily, 43 cfs Nov. 1, 1965.

Flood of Dec. 22, 1964, reached a stage of 21.55 ft, from floodmarks (discharge, 48,000 cfs, by step-backwater computation).

REMARKS.--Records good. No regulation or diversion above station. Records of water temperatures for the current year are published in Part 2 of this report.

DISCHARGE, IN CUBIC FEET PER SECOND, WATER YEAR OCTOBER 1972 TO SEPTEMBER 1973

DAY	OCT	NOV	DEC	JAN	FEB	MAR	APR	MAY	JUN	JUL	AUG	SEP
1	67	83	171	917	899	1,260	936	381	174	112	73	64
2	66	112	162	864	826	1,110	869	377	170	106	73	63
3	64	274	568	794	777	1,060	805	364	167	102	72	63
4	63	608	537	729	761	1,000	767	370	164	101	71	62
5	61	273	373	676	1,090	922	770	343	159	100	71	61
6	61	169	338	635	1,020	982	783	328	155	99	69	61
7	61	269	279	588	927	909	744	319	151	98	67	61
8	61	208	233	565	883	837	709	313	148	96	68	61
9	63	211	214	568	887	786	703	303	145	96	68	63
10	82	310	197	578	1,080	1,090	694	290	142	94	71	63
11	156	338	186	1,460	1,060	1,150	703	283	139	93	68	62
12	144	240	190	3,190	1,110	994	680	283	142	92	67	61
13	93	203	176	2,910	1,030	904	635	280	145	90	67	61
14	86	184	167	1,840	988	823	580	280	140	87	66	60
15	78	156	168	1,550	910	759	545	270	137	87	66	60
16	73	153	951	2,340	839	777	575	263	139	86	66	61
17	72	134	8,970	2,100	795	782	761	257	172	85	66	60
18	69	156	4,440	2,010	745	734	635	248	154	84	66	60
19	68	767	3,780	1,820	692	1,090	585	233	141	83	65	86
20	66	697	2,410	1,630	647	1,040	525	222	139	82	65	157
21	66	468	2,200	1,600	606	1,020	488	218	136	82	65	93
22	64	445	5,250	1,420	583	957	480	208	133	80	64	82
23	64	346	3,290	1,290	555	904	480	210	132	79	64	310
24	64	283	2,730	1,330	606	886	460	375	128	79	63	358
25	62	245	2,180	1,440	852	888	464	286	125	79	66	199
26	61	251	1,780	1,290	942	880	488	229	125	78	66	129
27	61	265	1,690	1,140	942	822	480	211	123	77	65	107
28	64	221	1,490	1,030	867	765	452	200	119	76	64	98
29	68	200	1,270	975	------	704	416	193	116	75	64	94
30	64	185	1,120	998	------	865	395	185	116	75	64	91
31	63	------	1,010	1,010	------	974	------	179	------	74	64	------
TOTAL	2,255	8,454	48,520	41,287	23,919	28,674	18,607	8,501	4,276	2,727	2,074	2,911
MEAN	72.7	282	1,565	1,332	854	925	620	274	143	88.0	66.9	97.0
MAX	156	767	8,970	3,190	1,110	1,260	936	381	174	112	73	358
MIN	61	83	162	565	555	704	395	179	116	74	63	60
AC-FT	4,470	16,770	96,240	81,890	47,440	56,870	36,910	16,860	8,480	5,410	4,110	5,770

CAL YR 1972 TOTAL 379,832 MEAN 1,038 MAX 24,000 MIN 61 AC-FT 753,400
WTR YR 1973 TOTAL 192,205 MEAN 527 MAX 8,970 MIN 60 AC-FT 381,200

PEAK DISCHARGE (BASE, 7,000 CFS, REVISED).--Dec. 17 (1000) 12,700 cfs (13.86 ft); Dec. 22 (1300) 7,920 cfs (12.40 ft).

11530500 KLAMATH RIVER NEAR KLAMATH, CALIF.
(International Hydrological Decade River Station)

LOCATION.--Lat 41°30'45", long 123°58'30", in SW¼ sec.17, T.13 N., R.2 E., Del Norte County, on right bank 2.8 miles upstream from Turwar Creek, and 3.3 miles east of Klamath.

DRAINAGE AREA.--12,100 sq mi, approximately (not including Lost River or Lower Klamath Lake basins).

PERIOD OF RECORD.--October 1910 to December 1926 (published as "near Requa"), October 1950 to current year. Monthly discharge only for some periods, published in WSP 1315-B.

GAGE.--Water-stage recorder. Datum of gage is 5.60 ft above mean sea level (levels by Corps of Engineers). Prior to June 1926, nonrecording gage at same site at different datum.

AVERAGE DISCHARGE.--39 years, 17,350 cfs (12,570,000 acre-ft per year).

EXTREMES.--Current year: Maximum discharge, 97,800 cfs Jan. 17 (gage height, 19.88 ft); minimum daily, 1,810 cfs Sept. 13.
Period of record: Maximum discharge, 557,000 cfs Dec. 23, 1964 (gage height, 55.3 ft, from floodmarks), from rating curve extended above 230,000 cfs on basis of flood-routing study; minimum observed, 1,340 cfs July 31, Aug. 1, 1924.

REMARKS.--Records good. Flow considerably regulated by reservoirs and powerplants above station. Large diversions for irrigation above station. Records of chemical analyses and water temperatures for the current year are published in Part 2 of this report.

REVISIONS (WATER YEARS).--WSP 1285: 1951(P). WSP 1445: 1918-20.

DISCHARGE, IN CUBIC FEET PER SECOND, WATER YEAR OCTOBER 1972 TO SEPTEMBER 1973

DAY	OCT	NOV	DEC	JAN	FEB	MAR	APR	MAY	JUN	JUL	AUG	SEP
1	3,850	3,800	6,790	16,200	21,000	31,800	21,000	14,800	8,770	3,470	2,160	1,890
2	3,900	4,100	6,260	15,000	19,700	29,700	19,300	14,100	8,120	3,350	2,140	1,870
3	3,800	4,400	7,010	14,300	18,800	27,800	18,000	13,800	7,150	3,240	2,140	1,890
4	3,650	6,980	8,860	13,300	18,200	27,200	16,900	13,800	6,760	3,190	2,100	1,900
5	3,600	8,730	8,060	12,300	25,900	25,400	16,600	13,100	6,250	3,160	2,100	1,900
6	3,550	6,420	7,780	11,700	30,900	25,400	17,400	12,300	6,070	3,140	2,080	1,890
7	3,550	6,130	7,630	11,200	28,300	24,700	18,000	12,100	5,970	3,080	2,060	1,870
8	3,550	6,020	6,900	10,700	26,000	23,300	17,900	12,000	5,870	3,040	2,060	1,860
9	3,750	6,460	6,170	10,800	25,100	22,200	17,600	11,900	5,740	3,000	2,030	1,870
10	4,000	7,490	5,680	11,500	29,500	22,700	18,000	11,600	5,600	2,960	2,000	1,870
11	4,250	8,290	5,640	15,900	33,000	25,700	18,900	11,400	5,240	2,920	2,030	1,840
12	4,450	8,270	5,310	48,600	31,800	23,900	19,800	12,800	5,020	2,910	2,030	1,820
13	4,400	7,490	6,460	74,700	28,900	21,700	19,700	14,800	4,970	2,920	2,000	1,810
14	4,150	7,440	6,200	64,300	26,800	20,600	19,000	16,100	4,820	2,890	1,990	1,820
15	3,950	8,440	5,870	48,200	25,600	19,600	17,400	16,500	4,650	2,790	1,950	1,820
16	4,300	7,940	7,540	68,100	23,500	18,900	16,400	16,200	4,480	2,700	1,960	1,840
17	4,550	8,740	41,300	87,900	21,700	19,500	17,700	16,800	4,560	2,600	1,950	1,850
18	4,250	8,110	57,200	71,000	20,400	17,900	17,300	16,800	4,610	2,520	1,940	1,840
19	4,200	10,400	65,100	66,300	19,300	19,900	15,800	15,900	4,380	2,500	1,930	2,060
20	4,000	11,400	58,500	52,500	18,300	22,800	14,400	13,700	4,240	2,500	1,940	3,040
21	3,900	9,180	43,700	45,700	17,400	22,400	13,400	11,900	4,170	2,500	1,920	3,300
22	3,850	8,670	65,100	38,900	16,600	21,500	12,900	10,900	4,130	2,400	1,910	2,990
23	3,800	8,150	69,200	33,700	16,100	20,100	13,400	10,500	4,090	2,380	1,900	4,480
24	3,800	7,700	58,100	31,000	16,500	19,600	14,000	11,100	3,990	2,340	1,920	5,280
25	3,750	7,400	45,800	32,000	25,000	19,600	14,500	13,200	3,870	2,300	2,010	5,340
26	3,700	7,170	36,100	28,900	29,600	19,900	15,700	11,200	3,820	2,280	2,060	4,280
27	3,700	7,660	31,600	25,700	33,700	19,500	18,200	9,440	3,820	2,280	2,050	3,380
28	3,750	7,790	29,100	23,300	31,700	18,500	19,400	8,810	3,790	2,240	2,020	3,000
29	3,750	7,510	25,100	21,900	------	17,200	18,100	8,660	3,690	2,240	1,990	2,830
30	3,800	7,170	21,200	21,900	------	18,000	16,300	8,700	3,600	2,240	1,950	2,720
31	3,700	------	18,200	23,100	------	20,900	------	8,940	------	2,200	1,910	------
TOTAL	121,200	225,450	773,460	1,050,6M	679,300	687,900	513,000	393,850	152,240	84,280	62,230	76,150
MEAN	3,910	7,515	24,950	33,890	24,260	22,190	17,100	12,700	5,075	2,719	2,007	2,538
MAX	4,550	11,400	69,200	87,900	33,700	31,800	21,000	16,800	8,770	3,470	2,160	5,340
MIN	3,550	3,800	5,310	10,700	16,100	17,200	12,900	8,660	3,600	2,200	1,900	1,810
AC-FT	240,400	447,200	1,534M	2,084M	1,347M	1,364M	1,018M	781,200	302,000	167,200	123,400	151,000

CAL YR 1972 TOTAL 7,684,900 MEAN 21,000 MAX 317,000 MIN 2,360 AC-FT 15,240,000
WTR YR 1973 TOTAL 4,819,660 MEAN 13,200 MAX 87,900 MIN 1,810 AC-FT 9,560,000

PEAK DISCHARGE (BASE, 90,000 CFS).--Jan. 17 (0330) 97,800 cfs (19.88 ft).

11532500 SMITH RIVER NEAR CRESCENT CITY, CALIF.

LOCATION.--Lat 41°47'22", long 124°03'14", in SW¼SW¼ sec.10, T.16 N., R.1 E., (unsurveyed), Del Norte County, Six Rivers National Forest, on left bank 0.5 mile downstream from South Fork, and 8 miles east of Crescent City.

DRAINAGE AREA.--609 sq mi.

PERIOD OF RECORD.--October 1931 to current year. Monthly discharge only for some periods, published in WSP 1315-B.

GAGE.--Water-stage recorder and crest-stage gage. Datum of gage is 89.61 ft above mean sea level.

AVERAGE DISCHARGE.--42 years, 3,817 cfs (2,765,000 acre-ft per year).

EXTREMES.--Current year: Maximum discharge, 49,800 cfs Dec. 22 (gage height, 25.63 ft); minimum daily, 208 cfs Oct. 7, 8.
Period of record: Maximum discharge, 228,000 cfs Dec. 22, 1964 (gage height, 48.5 ft, from floodmarks), from rating curve extended above 69,000 cfs on basis of slope-area measurement at gage height 39.51 ft; minimum daily, 160 cfs Oct. 24, 25, 1964.

REMARKS.--Records excellent. No regulation or diversion above station. Records of chemical analyses and water temperatures for the current year are published in Part 2 of this report.

DISCHARGE, IN CUBIC FEET PER SECOND, WATER YEAR OCTOBER 1972 TO SEPTEMBER 1973

DAY	OCT	NOV	DEC	JAN	FEB	MAR	APR	MAY	JUN	JUL	AUG	SEP
1	240	251	831	3,290	4,490	4,410	5,130	1,640	743	425	280	235
2	232	370	788	3,120	3,950	8,970	4,670	1,590	718	421	276	229
3	224	765	2,470	2,880	3,600	6,950	4,110	1,570	706	412	273	226
4	216	3,070	2,850	2,650	3,480	5,880	3,750	1,640	682	412	266	223
5	216	1,760	1,980	2,470	5,840	5,630	3,600	1,500	658	407	266	223
6	212	1,020	1,760	2,340	5,440	4,870	3,510	1,420	640	382	266	223
7	208	1,790	1,460	2,190	4,550	4,750	3,270	1,380	622	375	266	226
8	208	1,440	1,220	2,090	4,040	4,350	3,060	1,360	604	370	266	226
9	212	1,340	1,080	2,120	3,830	3,930	2,940	1,340	592	365	263	223
10	268	2,190	1,000	2,190	4,960	3,600	2,830	1,300	575	360	263	220
11	510	2,430	925	3,750	5,190	4,770	2,840	1,250	563	355	263	220
12	678	1,710	959	20,400	5,880	5,460	2,790	1,240	563	350	260	217
13	415	1,280	902	21,000	5,270	4,890	2,620	1,260	598	350	257	211
14	365	1,070	833	11,800	4,660	4,310	2,420	1,340	569	345	257	217
15	312	896	819	8,350	4,170	3,790	2,280	1,290	557	340	254	217
16	288	862	5,640	19,700	3,780	3,430	2,280	1,210	575	340	251	217
17	268	765	36,000	16,000	3,460	3,580	2,910	1,180	775	335	251	217
18	260	879	20,100	14,000	3,200	4,010	2,680	1,160	712	335	251	223
19	252	4,820	18,100	11,700	2,980	3,900	2,630	1,090	616	330	244	399
20	248	4,500	11,600	8,280	2,780	6,390	2,440	1,010	575	330	244	1,310
21	240	2,670	12,300	8,160	2,620	6,600	2,280	943	546	330	244	781
22	240	2,520	37,700	6,750	2,530	6,100	2,210	899	523	330	241	546
23	236	1,970	23,000	5,550	2,490	5,400	2,180	899	518	328	241	3,380
24	228	1,580	20,100	5,990	2,370	4,900	2,100	1,410	501	328	244	3,790
25	224	1,330	10,800	9,600	2,450	4,400	2,090	1,380	490	328	257	2,870
26	220	1,250	7,130	7,130	3,750	4,100	2,170	1,060	490	309	260	1,410
27	216	1,280	6,340	5,580	4,390	3,850	2,190	957	481	298	253	907
28	229	1,090	5,880	4,710	5,080	3,490	2,050	899	462	294	244	682
29	277	979	4,910	4,220	------	3,210	1,870	857	448	294	241	556
30	257	894	4,200	4,390	------	3,910	1,730	822	435	287	238	480
31	238	------	3,680	5,320	------	5,290	------	788	------	283	238	------
TOTAL	8,437	48,771	247,357	227,720	111,230	149,120	83,630	37,684	17,537	10,748	7,918	21,104
MEAN	272	1,626	7,979	7,346	3,973	4,810	2,788	1,216	585	347	255	703
MAX	678	4,820	37,700	21,000	5,880	8,970	5,130	1,640	775	425	280	3,790
MIN	208	251	788	2,090	2,370	3,210	1,730	788	435	283	238	211
AC-FT	16,730	96,740	490,600	451,700	220,600	295,800	165,900	74,750	34,780	21,320	15,710	41,860

CAL YR 1972 TOTAL 1,753,397 MEAN 4,791 MAX 144,000 MIN 200 AC-FT 3,478,000
WTR YR 1973 TOTAL 971,256 MEAN 2,661 MAX 37,700 MIN 208 AC-FT 1,926,000

PEAK DISCHARGE (BASE, 36,000 CFS).--Dec. 17 (1345) 47,300 cfs (25.22 ft); Dec. 22 (1500) 49,800 cfs (25.63 ft).

As the number of streams on which streamflow information is likely to be desired far exceeds the number of stream-gaging stations feasible to operate at one time, the Geological Survey collects limited streamflow data at sites other than stream-gaging stations. When limited streamflow data are collected on a systematic basis over a period of years for use in hydrologic analyses, the site at which the data are collected is called a partial-record station. Data collected at these partial-record stations are usable in low-flow or flood-flow analyses, depending on the type of data collected. In addition, discharge measurements are made at other sites not included in the partial-record program. These measurements are generally made in times of drought or flood to give better areal coverage to those events. Those measurements and others collected for some special reason are called measurements at miscellaneous sites.

Records collected at partial-record stations are presented in a table of annual maximum discharge at crest-stage stations. Discharge measurements made at miscellaneous sites for both low flow and high flow are given in a second table.

Crest-stage partial-record stations

As explained on page 10 the California district publishes annual maxima on small streams at about 304 sites in a separate publication Floods From Small Drainage Areas. In addition, discharge measurements are generally made in times of drought or flood to give better coverage to those events. Those measurements and others collected for some special reason are called measurements at miscellaneous sites.

The following table contains annual maximum discharges for crest-stage stations not included in the above-mentioned report. A crest-stage gage is a device which will register the peak stage occurring between inspections of the gage. A stage-discharge relation for each gage is developed from discharge measurements made by indirect measurements of peak flow or by current meter. The date of the maximum discharge is not always certain but is usually determined by comparison with nearby continuous-record stations, weather records, or local inquiry. Only the maximum discharge for the current water year is given. Information on some lower floods may have been obtained but is not published herein. The years given in the period of record represent water years for which the annual maximum has been obtained.

ANNUAL MAXIMUM DISCHARGE AT CREST-STAGE PARTIAL-RECORD STATIONS DURING WATER YEAR 1973

Station No.	Station name	Location	Drainage area (sq mi)	Period of record	Annual maximum		
					Date	Gage height (feet)	Discharge (cfs)
		DALE LAKE BASIN					
10253320	Quail Wash near Joshua Tree	Lat 34°07'04", long 116°18'27", in SW¼NW¼NE¼ sec.1, T.1 S., R.6 E., San Bernardino County, on right bank 0.2 mile downstream from Coyote Hole Spring, and 1.1 miles south of Joshua Tree.	100	1964-71a 1972-73	--	--	0
10253350	Fortynine Palms Creek near Twentynine Palms	Lat 34°07'12", long 116°05'43", (unsurveyed), San Bernardino County, in Joshua Tree National Monument, on left bank 50 ft upstream from North Monument boundary, 1.1 miles downstream from Fortynine Palms Oasis, and 2.6 miles southwest of Twentynine Palms.	8.55	1962-71a 1972-73	--	--	0
		SALTON SEA BASIN					
10257800	Long Creek near Desert Hot Springs	Lat 33°57'53", long 116°26'35", in NW¼SE¼SE¼ sec.27, T.2 S., R.5 E., Riverside County, on left bank 0.4 mile downstream from Metropolitan Water District aqueduct, and 3.3 miles east of Desert Hot Springs.	19.4	1963-71a 1972-73	--	--	0
		EMERSON LAKE BASIN					
10260200	Pipes Creek near Yucca Valley	Lat 34°10'19", long 116°32'45", in NE¼SE¼NE¼ sec.15, T.1 N., R.4 E., San Bernardino County, on left bank 2.8 miles upstream from Antelope Wash, and 6.8 miles northwest of Yucca Valley.	15.1	1958-71a 1972-73	--	--	0

See footnotes at end of table.

Crest-stage partial-record stations--Continued

ANNUAL MAXIMUM DISCHARGE AT CREST-STAGE PARTIAL-RECORD STATIONS DURING WATER YEAR 1973--Continued

Station No.	Station name	Location	Drainage area (sq mi)	Period of record	Annual maximum		
					Date	Gage height (feet)	Discharge (cfs)
		LUCERNE DRY LAKE BASIN					
10260400	Cushenbury Creek near Lucerne Valley	Lat 34°20'52", long 116°50'42", in NE¼SW¼NE¼ sec.14, T.3 N., R.1 E., San Bernardino County, in San Bernardino National Forest, on right bank 0.3 mile upstream from forest boundary, and 9 miles southeast of Lucerne Valley.	6.36	1957-71a 1972-73	--	--	0
		INDIAN WELLS VALLEY					
10264878	Ninemile Creek near Brown	Lat 35°50'35", long 117°55'35", (unsurveyed), Inyo County, on left bank 600 ft upstream from Los Angeles aqueduct, and 6.4 miles northwest of Brown.	10.4	1961-71a 1972-73	1-16-73	4.02	2.8
		SANTA MONICA CREEK BASIN					
11119540	Santa Monica Creek at Carpinteria	Lat 34°24'51", long 119°31'32", in Pueblo Lands of Santa Barbara, Santa Barbara County, on left bank of Foothill Road (Hwy 192), 1.0 mile northwest of Carpinteria.	3.64	1969, 1972-73	12-27-71 1-18-73	-- 13.53	b 6,300 623
		SAN YSIDRO CREEK BASIN					
11119660	San Ysidro Creek at Montecito	Lat 34°26'46", long 119°37'17", in Pueblo Lands of Santa Barbara, Santa Barbara County, on right bank 0.5 mile north of intersection of San Ysidro and East Valley Roads, Montecito.	3.07	1969, 1972-73	12-27-71 1-18-73	c 7.50 c 27.2	b 195 190
		SYCAMORE CREEK BASIN					
11119700	Sycamore Creek at Santa Barbara	Lat 34°25'45", long 119°40'35", in Pueblo Lands of Santa Barbara, Santa Barbara County, on left bank at intersection of Sycamore Canyon Road and Alameda Padre Serra in Santa Barbara.	3.41	1971-72a 1973	1-18-73	4.23	918
		MISSION CREEK BASIN					
11119740	Mission Creek at Santa Barbara	Lat 34°27'09", long 119°42'30", in Pueblo Lands of Santa Barbara, Santa Barbara County, on left bank 0.4 mile north of intersection of Foothill Road (Hwy 192) and Mission Canyon Road, 0.8 mile north of Santa Barbara.	2.78	1972-73	12-27-71 1-18-73	16.54 17.96	b 80 790
		ATASCADERO CREEK BASIN					
11119900	Atascadero Creek at Puente Road, near Goleta	Lat 34°25'56", long 119°47'00", in Pueblo Lands of Santa Barbara, Santa Barbara County, on right bank of Puente Drive, 0.4 mile south of Hollister Avenue, and 2.4 miles east of Goleta.	3.86	1971-72a 1973	1-18-73	3.73	792

See footnotes at end of table.

Crest-stage partial-record stations--Continued

ANNUAL MAXIMUM DISCHARGE AT CREST-STAGE PARTIAL-RECORD STATIONS DURING WATER YEAR 1973--Continued

Station No.	Station name	Location	Drainage area (sq mi)	Period of record	Annual maximum		
					Date	Gage height (feet)	Discharge (cfs)
		SANTA YNEZ RIVER BASIN					
11128700	Thumbelina Creek at Buellton	Lat 34°36'37", long 120°11'01", in San Carlos De Jonata Grant, Santa Barbara County, on right side of channel on north side of State Highway 246, 0.6 mile east of Buellton.	3.07	1972-73	12-27-71 1-18-73	5.62 6.47	b 31 67
11135200	Rodeo-San Pasqual Creek near Lompoc	Lat 34°38'42", long 120°30'57", in Lompoc Grant, Santa Barbara County, on left bank 0.1 mile east of Dewolf Avenue and at Highway 246, 3.3 miles west of Lompoc.	7.80	1971-72a 1973	1-18-73	2.60	330
		NAPA RIVER BASIN					
11458120	Milliken Creek tributary near Napa	Lat 38°20'06", long 122°16'46", in Yajome Grant, Napa County, on right bank at upstream side of bridge, 0.7 mile upstream from mouth, and 2.6 miles north of Napa.	2.54	1972-73	1-16-73	56.00	430
11458140	Milliken Creek at Napa	Lat 38°19'31", long 122°16'24", in Yajome Grant, Napa County, on right bank at upstream side of West Trancas Road bridge, at Napa, and 0.7 mile upstream from mouth.	20.8	1971-73	1-16-73	58.10	--
11458150	Sarco Creek near Napa	Lat 38°19'56", long 122°15'06", in Tulucay Grant, Napa County, on left bank at culvert on Vichy Avenue, 3 miles northwest of Napa.	3.56	1971-73	1-16-73	53.59	499
		SAN RAFAEL CREEK BASIN					
11459790	San Rafael Creek at Sirard Lane, at San Rafael	Lat 37°59'04", long 122°32'58", in San Pedro Santa Margarita Las Gallinas Grant, Marin County, on left bank on upstream wingwall of culvert on Sirard Lane in San Rafael.	0.19	1972-73	1-18-73d	54.70	71
11459810	Irwin Creek tributary at San Rafael	Lat 37°59'28", long 122°30'29", in San Pedro Santa Margarita Las Gallinas Grant, Marin County, on right bank at end of Cascade Lane in Black Canyon in San Rafael.	.11	1972-73	1-18-73d	50.52	5.7
11459820	Irwin Creek tributary No. 2 at San Rafael	Lat 37°58'56", long 122°30'24", in San Pedro Santa Margarita Las Gallinas Grant, Marin County, on right bank at upstream side of culvert on Deer Park Road at San Rafael.	.16	1972-73	1-18-73d	52.66	21
		RUSSIAN RIVER BASIN					
11460940	Russian River near Redwood Valley	Lat 39°19'10", long 123°13'20", in NW¼ sec.20, T.17 N., R.12 W., Mendocino County, on left bank 600 ft upstream from Rocky Creek, and 3.8 miles north of town of Redwood Valley.	14.1	1964-68a 1969-73	1-11-73	6.82	1,390

See footnotes at end of table.

Crest-stage partial-record stations--Continued

ANNUAL MAXIMUM DISCHARGE AT CREST-STAGE PARTIAL-RECORD STATIONS DURING WATER YEAR 1973--Continued

Station No.	Station name	Location	Drainage area (sq mi)	Period of record	Annual maximum		
					Date	Gage height (feet)	Discharge (cfs)
		RUSSIAN RIVER BASIN--Continued					
11463940	Franz Creek near Kellogg	Lat 38°36'30", long 122°45'35", in Mallacomes Grant, Sonoma County, on left bank at downstream side of highway bridge, 100 ft downstream from Bidwell Creek, and 2 miles south of Kellogg.	15.7	1956, 1958-62 1963-68a 1969-73	1-16-73	7.16	3,490
		ALBION RIVER BASIN					
11468010	Albion River near Comptche	Lat 39°15'40", long 123°37'00", in SW¼ sec.11, T.16 N., R.16 W., Mendocino County, on right bank 2,000 ft downstream from Morrison Gulch, and 1.7 miles west of Comptche.	14.4	1961-69a 1970-73	1-16-73	7.97	1,140
		EEL RIVER BASIN					
11475500	South Fork Eel River near Branscomb	Lat 39°43'09", long 123°39'06", in NW¼ sec.32, T.22 N., R.16 W., Mendocino County, on right bank 0.4 mile upstream from Jack of Hearts Creek, and 4.7 miles north of Branscomb.	43.9	1946-70a 1973	1-16-73	8.19	4,280
		KLAMATH RIVER BASIN					
11522300	South Fork Salmon River near Forks of Salmon	Lat 41°13'20", long 123°15'00", in SE¼ sec.30, T.39 N., R.12 W., Siskiyou County, on left bank 100 ft downstream from Methodist Creek, and 4.5 miles southeast of town of Forks of Salmon.	252	1958-66a 1967-73	1-13-73	7.68	3,470
		SMITH RIVER BASIN					
11532000	South Fork Smith River near Crescent City	Lat 41°47'30", long 124°01'30", in SE¼ sec.11, T.16 N., R.1 E., Del Norte County, 9.5 miles east of Crescent City.	291	1911-13a 1954-61a 1962-73	12-22-72	20.1	23,700

a Operated as a continuous-record gaging station.
b Not previously published.
c At supplemental gage 0.2 mile upstream.
d Water-quality data published in Part 2 of this report.

Discharge measurements made at miscellaneous sites

Stream	Tributary to	Location	Drainage area (sq mi)	Measured previously (water year)	Measurements	
					Date	Discharge (cfs)
		SAN LORENZO RIVER BASIN				
Kings Creek	San Lorenzo River	Lat 37°09'35", long 122°07'32", in SE¼SW¼ sec.7, T.9 S., R.2 W., Santa Cruz County, at upstream side of bridge on Kings Creek Road at Redwood Grove, 0.7 mile upstream from mouth, and 2.3 miles north of town of Boulder Creek.	7.56	1973a	6-27-73	1.0
San Lorenzo River	Pacific Ocean	Lat 37°02'53", long 122°04'32", in Zayante Grant, Santa Cruz County, 100 ft upstream from Zayante Creek, and 0.4 mile southeast of Felton.	--	--	9-12-73	10
Zayante Creek	San Lorenzo River	Lat 37°06'22", long 122°01'17", in SE¼NE¼ sec.36, T.9 S., R.2 W., Santa Cruz County, just downstream from Mountain Charlie Gulch, and 1.5 miles northeast of town of Zayante, and 5.6 miles upstream from mouth.	9.27	1973a	7-24-73	1.3
Lompico Creek	Zayante Creek	Lat 37°04'59", long 122°03'01", in NE¼NW¼ sec.11, T.10 S., R.2 W., Santa Cruz County, at upstream side of bridge, 450 ft upstream from mouth, and 0.6 mile southwest of town of Zayante.	2.78	1973a	7-24-73	.33
Bean Creek	Zayante Creek	Lat 37°03'14", long 122°02'53", in SE¼ sec.14, T.10 S., R.2 W., Santa Cruz County, 0.8 mile upstream from mouth, and 1.4 miles east of Felton.	9.18	1973a	7-24-73	2.8
Zayante Creek	San Lorenzo River	Lat 37°02'54", long 122°03'55", in Zayante Grant, Santa Cruz County, 600 ft upstream from mouth, and 0.4 mile southwest of Felton.	26.4	1973a	7-24-73 9-12-73	6.9 6.3
		CALABAZAS CREEK BASIN				
Calabazas Creek	San Francisco Bay	Lat 37°16'03", long 122°03'31", in SE¼NE¼ sec.3, T.8 S., R.2 W., Santa Clara County, at culvert on Mt. Eden Road, 100 ft upstream from small left-bank tributary, and 1.7 miles northwest of Saratoga Post Office.	0.49	1973a	3-6-73 3-6-73	2.2 1.8
Tributary No. 3	Calabazas Creek	Lat 37°15'54", long 122°03'19", in NW¼SW¼ sec.2, T.8 S., R.2 W., Santa Clara County, at culvert on Mt. Eden Road, 200 ft upstream from mouth, and 1.4 miles northwest of Saratoga Post Office.	.11	1973a	3-6-73 3-6-73	1.1 .72
Tributary No. 4	Calabazas Creek	Lat 37°15'54", long 122°03'18", in NW¼SW¼ sec.2, T.8 S., R.2 W., Santa Clara County, at culvert on Mt. Eden Road, 400 ft upstream from mouth, and 1.4 miles northwest of Saratoga Post Office.	.26	1973a	3-6-73 3-6-73	4.1 2.6

See footnotes at end of table.

Discharge measurements made at miscellaneous sites--Continued

Stream	Tributary to	Location	Drainage area (sq mi)	Measured previously (water year)	Measurements	
					Date	Discharge (cfs)
		CALABAZAS CREEK BASIN--Continued				
Tributary No. 5	Calabazas Creek	Lat 37°15'54", long 122°03'10", in NE¼SW¼ sec.2, T.8 S., R.2 W., Santa Clara County, at culvert on Pierce Road, 1.3 miles northwest of Saratoga Post Office.	0.004	1973a	3-6-73 3-6-73	0.07 .06
Calabazas Creek	San Francisco Bay	Lat 37°16'00", long 122°03'04", in SE¼NW¼ sec.2, T.8 S., R.2 W., Santa Clara County, at bridge on Via Regina, 1.3 miles northwest of Saratoga Post Office.	1.43	1973a	11-13-72	32.4
Prospect Creek	Calabazas Creek	Lat 37°17'38", long 122°02'34", in SE¼NE¼ sec.26, T.7 S., R.2 W., Santa Clara County, on right bank at downstream side of bridge on Prospect Road, 20 ft downstream from Maria Lane, 0.6 mile upstream from mouth, and 2.5 miles northwest of Saratoga Post Office.	.76	1973a	1-16-73 1-16-73 1-16-73 1-16-73 1-16-73 1-16-73	63.1 55.2 40.0 16.3 8.36 4.11
Prospect Creek	Calabazas Creek	Lat 37°17'38", long 122°02'34", in SE¼NE¼ sec.26, T.7 S., R.2 W., Santa Clara County, on left bank at culvert on Prospect Road, at mouth 22 ft downstream from Maria Lane, and 2.5 miles northwest of Saratoga Post Office.	.014	1973a	1-16-73 1-16-73	.58 .17
		KLAMATH RIVER BASIN				
Fall Creek	Klamath River	NE¼ sec.36, T.48 N., R.5 W., Siskiyou County, 1,500 ft upstream from mouth, and 0.8 mile south of Fall Creek powerplant and Copco Post Office.	14.6	1928-59a 1964-72	9-18-73	c 33.1
Bogus Creek	Klamath River	NE¼ sec.17, T.47 N., R.3 W., Siskiyou County, 0.5 mile downstream from Iron Gate Dam, and 6.0 miles northeast of Hornbrook.	--	1965-72	9-18-73	b 33.1
Shasta River	Klamath River	SE¼NE¼ sec.20, T.42 N., R.5 W., Siskiyou County, at county bridge 1.1 miles northwest of Edgewood, and 4.2 miles northwest of Weed.	70.3	1972	4-18-73 9-7-73	47.1 b 5.15
Beaver Creek	Klamath River	NE¼SW¼ sec.30, T.47 N., R.8 W., Siskiyou County, 1.9 miles upstream from mouth, and 14.8 miles northwest of Yreka.	106	1953-58 1959-65c 1967-72	9-6-73	b 19.0
South Fork Scott River	Scott River	SW¼SE¼ sec.20, T.40 N., R.8 W., Siskiyou County, opposite unnamed tributary 1.1 miles southwest of Callahan, and 1.5 miles above East Fork Scott River.	42.5	1958-60c 1964, 1966-72	9-5-73	b 5.13
Moffett Creek	Scott River	SE¼NE¼ sec.27, T.44 N., R.8 W., Siskiyou County, 590 ft upstream from Soap Creek, and 5.1 miles east of Fort Jones.	69.8	1958-67c 1968-72	9-5-73	b .52
Elk Creek	Klamath River	NE¼ sec.36, T.16 N., R.7 E., Siskiyou County, 4.0 miles upstream from mouth, and 4.0 miles south of Happy Camp.	90.4	1956-64c 1967-72	9-18-73	b 26.0

See footnotes at end of table.

Discharge measurements made at miscellaneous sites--Continued

Stream	Tributary to	Location	Drainage area (sq mi)	Measured previously (water year)	Measurements	
					Date	Discharge (cfs)
		KLAMATH RIVER BASIN--Continued				
Thompson Creek	Klamath River	SE¼ sec.17, T.17 N., R.8 W., Siskiyou County, 50 ft upstream from highway bridge, 0.1 mile upstream from mouth, and 6.0 miles northeast of Happy Camp.	--	1968-72	9-6-72	b 11.2
Coffee Creek	Trinity River	NW¼SW¼ sec.2, T.37 N., R.8 W., Trinity County, 0.8 mile upstream from Little Boulder Creek, 3.2 miles upstream from mouth, and 8 miles northwest of new location of Trinity Center.	--	1957-66c 1968-72	9-5-73	b 39.1
Deadwood Creek	Trinity River	SW¼NW¼ sec.17, T.33 N., R.8 W., Trinity County, 300 ft upstream from mouth, and 0.7 mile northeast of Lewiston.	--	1965-72	3-1-73 3-27-73 9-4-73	53.8 22.3 b .59

a Water-quality data published in Part 2 of this report.
b Base flow.
c Operated as a continuous-record gaging station.

INDEX

Page

Accuracy of data..... 9
Acre-foot, definition of..... 3
Agua Caliente Creek near Warner Springs..... 123
Alameda Creek, at Union City..... 394
near Niles..... 391
Alamo Creek near Nipomo..... 291
Alamo Pintado Creek near Solvang..... 273
Alamo River near Niland..... 49
Albion basin, crest-stage partial-record stations in..... 503
Alisal Creek near Salinas..... 335
Alisal Reservoir near Solvang..... 274
Aliso Creek at El Toro..... 142
All-American Canal, below Pilot Knob wasteway... 33
near Imperial Dam, Ariz.-Calif..... 31
Almaden Reservoir, contents of..... 373
Amargosa River at Tecopa..... 44
Anderson Lake, contents of..... 380
Andreas Creek near Palm Springs..... 63
Antelope Creek near Tennant..... 472
Aptos Creek near Aptos..... 355
Arroyo Burro Creek at Santa Barbara..... 259
Arroyo Corte Madera del Presidio at Mill Valley. 418
Arroyo de la Cruz near San Simeon..... 310
Arroyo de la Laguna near Pleasanton..... 390
Arroyo del Hambre at Martinez..... 402
Arroyo del Rey at Del Rey Oaks..... 314
Arroyo Grande, above Phoenix Creek, near Arroyo Grande..... 302
at Arroyo Grande..... 306
Arroyo Hondo near San Jose..... 383
Arroyo Las Positas above Livermore..... 385
Arroyo Mocho, near Livermore..... 384
near Pleasanton..... 386
Arroyo Seco (Los Angeles River basin) near Pasadena..... 214
Arroyo Seco (Salinas River basin), near Greenfield..... 331
near Soledad..... 332
Arroyo Simi near Simi..... 225
Arroyo Trabuco at San Juan Capistrano..... 141
Arroyo Valle, above Lang Canyon, near Livermore. 387
at Pleasanton..... 389
near Livermore..... 388
Atascadero Creek basin, crest-stage partial-record stations in..... 501
Atascadero Creek near Goleta..... 261

Ballona Creek near Culver City..... 222
Bautista Creek near Valle Vista..... 177
Big Bear Lake near Big Bear Lake..... 145
Big Pine Creek near Big Pine..... 86
Big Rock Creek near Valyermo..... 76
Big Sur River near Big Sur..... 311
Bishop Creek below powerplant No. 6, near Bishop 85
Black Butte River near Covelo..... 445
Blosser ditch near Donovan Road, at Santa Maria. 300
Blue Creek near Klamath..... 497
Bodfish Creek near Gilroy..... 345
Boom Creek near Barstow..... 74
Bouquet Creek near Saugus..... 229
Borrego Palm Creek near Borrego Springs..... 53
Bradley ditch near Donovan Road, at Santa Maria. 299
Brea Creek below Brea Dam, near Fullerton..... 203
Bull Creek near Weott..... 458
Butano Creek near Pescadero..... 365

Cajon Creek below Lone Pine Creek, near Keenbrook..... 166
Calabazas Creek basin, discharge measurements at miscellaneous sites in..... 504
Calabazas Creek tributary at Mt. Eden Road, near Saratoga..... 377
Calero Reservoir, contents of..... 373
Calleguas Creek at Camarillo State Hospital..... 227
Campo Creek near Campo..... 102
Carbon Creek below Carbon Canyon Dam..... 189
Carmel River, at Robles del Rio..... 312
near Carmel..... 313
Carpinteria Creek near Carpinteria..... 255
Caruthers Creek near Ivanpah..... 46

Page

Castaic Creek near Saugus..... 230
Castro Valley Creek at Hayward..... 396
Cedar Creek near Bell Station..... 338
Cedar Gulch near Callahan..... 481
Cfs-day, definition of..... 3
Chamise Creek near Island Mountain..... 449
Chesbro Reservoir, contents of..... 341
China Spring Creek near Mountain Pass..... 45
Chino Creek at Schaeffer Avenue, near Chino..... 185
City Creek near Highland..... 153
Clair Engle Lake near Lewiston..... 488
Collection and computation of data..... 5
Colma Creek at South San Francisco..... 368
Colorado River, above Imperial Dam, Ariz.-Calif. 25
at Needles..... 16
at northerly international boundary, above Morelos Dam, near Andrade..... 29
at Palo Verde Dam, Ariz.-Calif..... 24
below Davis Dam, Ariz.-Nev..... 15
below Imperial Dam, Ariz.-Calif..... 26
below Imperial Dam, schematic diagram of..... 40
below Laguna Dam, Ariz.-Calif..... 27
below Parker Dam, Ariz.-Calif..... 22
below Yuma Main Canal wasteway, at Yuma, Ariz. 28
near Topock, Ariz..... 17
Colorado River aqueduct near Parker Dam, Ariz.-Calif..... 19
Conejo Creek above Highway 101, near Camarillo.. 226
Conn Creek near Oakville..... 407
Contents, definition of..... 3
Control, definition of..... 4
Conversion factors..... 14
Convict Creek near Mammoth Lakes..... 81
Cooperation, record of..... 2
Copco Lake near Copco..... 474
Corralitos Creek at Freedom..... 353
Corte Madera Creek at Ross..... 417
Cottonwood Creek (Owens Lake basin) near Olancha 92
Cottonwood Creek (Tijuana River basin) above Tecate Creek, near Dulzura..... 101
Cottonwood Wash near Cottonwood Spring..... 67
Coyote Creek (tributary to Salton Sea) near Borrego Springs..... 52
Coyote Creek (tributary to San Francisco Bay), near Gilroy..... 379
near Madrone..... 381
Coyote Creek (tributary to San Gabriel River) at Los Alamitos..... 206
Coyote Creek (tributary to Ventura River), near Oak View..... 250
near Ventura..... 252
Coyote Creek basin, reservoirs in..... 380
Coyote Lake, contents of..... 380
Crest-stage partial-record stations, discharge at..... 500
Cubic foot per second, definition of..... 4
Cucamonga Creek, near Mira Loma..... 187
near Upland..... 186
Cuyama River, below Buckhorn Canyon, near Santa Maria..... 290
below Twitchell Dam..... 293

Dale Lake basin, crest-stage partial-record stations in..... 500
Darwin Creek near Darwin..... 43
Data, accuracy of..... 9
explanation of..... 5
other data available..... 10
Deep Creek (Mojave River basin) near Hesperia... 69
Deep Creek (Salton Sea basin) near Palm Desert.. 64
Definition of terms and abbreviations..... 3
Devil Canyon Creek near San Bernardino..... 167
Discharge, definition of..... 4
Dobbyn Creek near Fort Seward..... 451
Downstream order and station numbers..... 5
Drainage area, definition of..... 4
Dry Creek (tributary to Alameda Creek) at Union City..... 392
Dry Creek (tributary to Russian River), near Cloverdale..... 429
near Geyserville..... 430

Page
East Twin Creek near Arrowhead Springs..... 157
Eel River, at Fort Seward..... 450
at Scotia..... 459
at Van Arsdale Dam, near Potter Valley..... 442
below Scott Dam, near Potter Valley..... 440
Middle Fork, near Dos Rios..... 447
near Dos Rios..... 443
North Fork, near Mina..... 448
South Fork, at Leggett..... 456
near Miranda..... 457
Eel River basin, crest-stage partial-record stations in..... 503
El Capitan Reservoir near Lakeside..... 111
El Toro Creek near Spreckels..... 334
Elder Creek near Branscomb..... 452
Elk Creek near Hearst..... 446
Emerson Lake basin, crest-stage partial-record stations in..... 500
Estrella River near Estrella..... 323
Explanation of surface-water data..... 5

Fish Creek near Duarte..... 196
Foxen Creek near Sisquoc..... 296
Franklin Creek at Carpinteria..... 256
Fullerton Creek, at Richman Avenue, near Fullerton..... 205
below Fullerton Dam, near Brea..... 204

Gabilan Creek near Salinas..... 336
Gage height, definition of..... 4
Gaging station, definition of..... 4
Garcia River near Point Arena..... 433
Gaviota Creek near Gaviota..... 264
Gibraltar Reservoir, contents of..... 267
Gila Gravity Main Canal at Imperial Dam, Ariz.-Calif..... 30
Guadalupe Reservoir, contents of..... 373
Guadalupe River at San Jose..... 375
Guadalupe River basin, reservoirs in..... 373
Guejito Creek near San Pasqual..... 119

Hayfork Creek near Hyampom..... 493
Honeydew Creek near Honeydew..... 437
Hopper Creek near Piru..... 238
Huasna River near Arroyo Grande..... 292
Hydrologic bench-mark station..... 4
Hydrologic conditions..... 10

Independence Creek below Pinyon Creek, near Independence..... 89
Indian Creek near Happy Camp..... 484
Indian Wells Valley, crest-stage partial-record stations in..... 501
International Boundary, Flow from Mexico..... 47
International Hydrological Decade (IHD) River Stations..... 5
Introduction..... 1
Inyo Creek near Lone Pine..... 90
Iron Gate Reservoir near Hornbrook..... 474
Irwin Creek at San Rafael..... 416

Jack Creek near Templeton..... 320
Jalama Creek near Lompoc..... 265
Jameson Lake, contents of..... 266
Jamul Creek near Jamul..... 106
Judge Francis Carr powerplant near French Gulch. 489

Keys Creek tributary at Valley Center..... 129
Klamath River, at Orleans..... 486
below Iron Gate Dam..... 475
below John C. Boyle powerplant, near Keno, Oreg..... 473
near Klamath..... 498
near Seiad Valley..... 483
Klamath River basin, crest-stage partial-record stations in..... 503
discharge measurements at miscellaneous sites in..... 505
reservoirs in..... 474

La Brea Creek near Sisquoc..... 295
Laguna Creek near Davenport..... 361
Laguna de Santa Rosa near Graton..... 431
Lakes and reservoirs:
Alisal Reservoir near Solvang..... 274
Almaden Reservoir..... 373
Anderson Lake..... 380
Big Bear Lake near Big Bear Lake..... 145
Cachuma, Lake, near Santa Ynez..... 271
Calero Reservoir..... 373

Page
Lakes and reservoirs--Continued
Chesbro Reservoir..... 341
Clair Engle Lake near Lewiston..... 488
Copco Lake near Copco..... 474
Coyote Lake..... 380
El Capitan Reservoir near Lakeside..... 111
Elsman, Lake..... 373
Gibraltar Reservoir..... 267
Guadalupe Reservoir..... 373
Havasu, Lake, near Parker Dam, Ariz.-Calif.... 20
Hemet, Lake, near Idyllwild..... 174
Hodges, Lake, near Escondido..... 121
Iron Gate Reservoir near Hornbrook..... 474
Jameson Lake..... 266
Lexington Reservoir..... 373
Lower Otay Reservoir near Chula Vista..... 107
Matilija Reservoir at Matilija Hot Springs.... 245
Mendocino Lake near Ukiah..... 423
Mono Lake near Mono Lake..... 95
Nacimiento Reservoir..... 325
Pillsbury, Lake, near Potter Valley..... 439
Piru, Lake, near Piru..... 236
Rodriguez Reservoir at Rodriguez Dam, Baja California, Mexico..... 104
Ruth Reservoir near Forest Glen..... 462
San Antonio Reservoir..... 325
San Vicente Reservoir near Lakeside..... 112
Santa Margarita Lake near Pozo..... 318
Stevens Creek Reservoir near Monte Vista..... 372
Sweetwater Reservoir near National City..... 110
Uvas Reservoir..... 341
Vail Lake..... 133
Wohlford, Lake, near Escondido..... 122
Las Flores Creek near Oceanside..... 138
Lee Vining Creek near Lee Vining..... 99
Lexington Reservoir, contents of..... 373
Little River near Trinidad..... 468
Little Rock Creek near Little Rock..... 77
Little San Gorgonio Creek near Beaumont..... 155
Little Shasta River near Montague..... 476
Little Tujunga Creek near San Fernando..... 211
Llagas Creek above Chesbro Reservoir, near Morgan Hill..... 340
Lockwood Creek, at Gorge, near Stauffer..... 234
Middle Fork, near Stauffer..... 233
Lone Pine Creek near Keenbrook..... 165
Lopez Creek near Arroyo Grande..... 304
Los Angeles River, at Long Beach..... 221
at Los Angeles..... 213
at Sepulveda Dam..... 207
near Downey..... 215
Los Angeles River basin, schematic diagram of... 193
Los Berros Creek near Nipomo..... 307
Los Penasquitos Creek, below Poway Creek, near Poway..... 115
near Poway..... 116
Lower Otay Reservoir near Chula Vista..... 107
Lucerne Dry Lake basin, crest-stage partial-record stations in..... 501
Lytle Creek, at Colton..... 168
near Fontana..... 163

Maacama Creek near Kellogg..... 427
Mad River, near Arcata..... 467
near Blue Lake..... 465
near Forest Glen..... 463
near Kneeland..... 464
North Fork, near Korbel..... 466
Majors Creek near Santa Cruz..... 360
Malibu Creek at Crater Camp, near Calabasas..... 224
Maria Ygnacio Creek at University Drive, near Goleta..... 260
Matadero Creek at Palo Alto..... 371
Matilija Creek, at Matilija Hot Springs..... 246
North Fork, at Matilija Hot Springs..... 247
Matilija Reservoir at Matilija Hot Springs..... 245
Mattole River near Petrolia..... 438
Meeks and Daley Canal near Colton..... 162
Mendocino Lake near Ukiah..... 423
Miguelito Creek at Lompoc..... 283
Mill Creek (Mono Lake) below Lundy Lake, near Mono Lake..... 96
Mill Creek (Santa Ana River basin) near Yucaipa. 149
Mill Creek, North Fork, near La Canada..... 209
Milliken Creek near Napa..... 409
Miscellaneous sites, measurements at..... 504
Mission Creek (Los Angeles River basin) near Montebello..... 218
Mission Creek (Salton Sea basin) near Desert Hot Springs..... 59

Page

Mission Creek basin, crest-stage partial-record stations in..... 501
Mission Creek near Mission Street, at Santa Barbara..... 257
Mojave River, at Afton..... 75
at Barstow..... 73
at lower narrows, near Victorville..... 71
below Forks Reservoir, near Hesperia..... 70
near Hodge..... 72
Mono Lake near Mono Lake..... 95
Morro Creek at Morro Bay..... 308
Murrieta Creek at Temecula..... 134

Nacimiento Reservoir, contents of..... 325
Nacimiento River, below Nacimiento Dam, near Bradley..... 326
below Sapaque Creek, near Bryson..... 324
Napa Creek at Napa..... 411
Napa River, near Napa..... 408
near St. Helena..... 406
Napa River basin, crest-stage partial-record stations in..... 502
Navarro River near Navarro..... 434
New River near Westmorland..... 50
Novato Creek at Novato..... 414
Noyo River near Fort Bragg..... 435

Oak Creek near Mojave..... 79
Oso Creek at Crown Valley Parkway, near Mission Viejo..... 140
Other data available..... 10
Outlet Creek near Longvale..... 444
Owens River, at Keeler Bridge, near Lone Pine... 91
near Big Pine..... 88

Pacheco Creek near Dunneville..... 339
Pacoima Creek near San Fernando..... 208
Pajaro River, at Chittenden..... 352
at Watsonville..... 354
near Gilroy..... 342
Pajaro River basin, reservoirs in..... 341
Palm Canyon Creek, near Palm Springs..... 62
tributary near Anza..... 61
Palo Verde Canal near Blythe..... 23
Partial-record stations, definition of..... 4
discharge at..... 500
Patterson Creek at Union City..... 393
Pauma Creek near Pauma Valley..... 125
Peralta Creek at Oakland..... 398
Perris Valley Storm Drain at Nuevo Road, near Perris..... 178
Pescadero Creek (tributary to Pacific Ocean) near Pescadero..... 364
Pescadero Creek (tributary to San Benito River) near Chittenden..... 351
Pilarcitos Creek at Half Moon Bay..... 367
Pilot Knob powerplant and wasteway near Pilot Knob..... 32
Pine Creek at division box, near Bishop..... 83
Pine Tree Creek near Mojave..... 80
Pinole Creek at Pinole..... 401
Piru Creek, above Lake Piru..... 235
below Thorn Meadows, near Stauffer..... 232
near Piru..... 237
Plunge Creek near East Highlands..... 151
Pomerado Creek at Poway Road, near Poway..... 114
Potter Valley powerhouse tailrace near Potter Valley..... 441
Precipitation:
Boom Creek near Barstow..... 74
Calabazas Creek tributary at Mt. Eden Road, near Saratoga..... 377
Cedar Gulch near Callahan..... 481
China Spring Creek near Mountain Pass..... 45
Colma Creek at South San Francisco..... 368
Cottonwood Wash near Cottonwood Spring..... 67
Darwin Creek near Darwin..... 43
Elder Creek near Branscomb..... 452
Los Penasquitos Creek below Poway Creek, near Poway..... 115
Mill Creek, North Fork, near La Canada..... 209
Mission Creek near Desert Hot Springs..... 59
Palm Canyon Creek tributary near Anza..... 61
Perris Valley Storm Drain at Nuevo Road, near Perris..... 178
Pescadero Creek near Chittenden..... 351
Pine Tree Creek near Mojave..... 80
San Luis Rey River tributary near Pala..... 127
San Rafael Creek at San Rafael..... 415
Santa Rita Creek near Templeton..... 321

Page

Precipitation--Continued
Tar Spring Creek near Arroyo Grande..... 305
Temecula Creek at Vail Dam..... 133
Wildrose Creek near Wildrose Station..... 41
Wilson Creek tributary near Dulzura..... 100
Prospect Creek at Saratoga Golf Course, near Saratoga..... 378
Publications..... 9
Purisima Creek near Lompoc..... 281

Reclamation ditch near Salinas..... 337
Records of discharge collected by agencies other than the Geological Survey..... 10
Redwood Creek (tributary to Napa Creek) near Napa..... 410
Redwood Creek (tributary to Pacific Ocean) at Orick..... 471
at South Park boundary, near Orick..... 470
near Blue Lake..... 469
Redwood Creek (tributary to San Francisco Bay) at Redwood City..... 369
Return surface flows below Imperial Dam, Ariz.-Calif..... 34
Reyes Creek near Ventucopa..... 289
Rheem Creek at San Pablo..... 400
Rio Hondo, above Whittier Narrows Dam..... 216
below Whittier Narrows Dam..... 219
near Downey..... 220
near Montebello..... 217
Riverside Water Quality Control Plant at Riverside Narrows, near Arlington..... 171
Rock Creek at Little Round Valley, near Bishop.. 82
Rodriguez Reservoir at Rodriguez Dam, Baja California, Mexico..... 104
Ross Creek below Jarvis Road, at San Jose..... 374
Runoff map..... 13
Rush Creek, above Grant Lake, near June Lake.... 98
below Agnew Lake, near June Lake..... 97
Russian River, East Fork, near Calpella..... 422
East Fork, near Ukiah..... 424
near Cloverdale..... 426
near Guerneville..... 432
near Healdsburg..... 428
near Hopland..... 425
near Ukiah..... 421
Russian River basin, crest-stage partial-record stations in..... 502
Ruth Reservoir near Forest Glen..... 462

Salinas River, above Pilitas Creek, near Santa Margarita..... 319
at Paso Robles..... 322
at Soledad..... 330
near Bradley..... 328
near Pozo..... 315
near Spreckels..... 333
Salinas River basin, reservoirs in..... 325
Salmon Creek at Bodega..... 420
Salmon River at Somes Bar..... 485
Salsipuedes Creek, near Lompoc..... 279
near Pozo..... 317
Salt Creek (Salton Sea basin) near Mecca..... 48
Salt Creek (Santa Ana River basin) at Railroad Canyon Reservoir, near Elsinore..... 180
Salton Sea, inflow to..... 47
near Westmorland..... 47
Salton Sea basin, crest-stage partial-record stations in..... 500
San Antonio Creek (Santa Ana River basin) below San Antonio Dam..... 184
San Antonio Creek (tributary to Pacific Ocean), at Los Alamos..... 285
near Casmalia..... 286
San Antonio Creek (Ventura River basin) at Casitas Springs..... 249
San Antonio Reservoir, contents of..... 325
San Antonio River near Lockwood..... 327
San Benito River, at State Highway 156, near Hollister..... 350
near Hollister..... 349
near Willow Creek School..... 347
San Bernardino Water Quality Control Plant at San Bernardino..... 160
San Diego Creek near Irvine..... 143
San Diego River near Santee..... 113
San Dimas Creek below San Dimas Dam..... 198
San Felipe Creek, near Julian..... 51
near Westmorland..... 55
San Francisquito Creek at Stanford University... 370
San Gabriel River, above Whittier Narrows Dam... 200

Page
San Gabriel River, at Pico..... 201
at Spring Street, near Los Alamitos..... 202
below Santa Fe Dam, near Baldwin Park..... 197
East Fork, near Camp Bonita..... 194
West Fork, at Camp Rincon..... 195
San Gabriel River basin, schematic diagram of... 193
San Gorgonio River near White Water..... 57
San Gregorio Creek at San Gregorio..... 366
San Jacinto River, at Railroad Canyon weir, near Elsinore..... 179
near Elsinore..... 181
near San Jacinto..... 175
San Jose Creek (tributary to Pacific Ocean), at Goleta..... 263
near Goleta..... 262
San Jose Creek (tributary to San Gabriel River) near El Monte..... 199
San Juan Creek at San Juan Capistrano..... 139
San Lorenzo Creek (Salinas River basin) below Bitterwater Creek, near King City..... 329
San Lorenzo Creek (tributary to San Francisco Bay), at Hayward..... 395
at San Lorenzo..... 397
San Lorenzo River, at Big Trees..... 359
near Boulder Creek..... 357
San Lorenzo River basin, discharge measurements at miscellaneous sites in..... 504
San Luis Rey River, at Monserate Narrows, near Pala..... 128
at Oceanside..... 131
near Bonsall..... 130
tributary near Pala..... 127
West Fork, near Warner Springs..... 124
San Rafael Creek at San Rafael..... 415
San Rafael Creek basin, crest-stage partial-record stations in..... 502
San Ramon Creek, at San Ramon..... 403
at Walnut Creek..... 404
San Timoteo Creek near Loma Linda..... 156
San Vicente Creek near Davenport..... 362
San Vicente Reservoir near Lakeside..... 112
San Ysidro Creek basin, crest-stage partial-record stations in..... 501
Santa Ana Creek near Oak View..... 251
Santa Ana River, at E Street, near San Bernardino..... 161
at Mission Boulevard, at Riverside..... 169
at MWD Crossing, near Arlington..... 170
at Prado Park, near Corona..... 173
at Riverside Narrows, near Arlington..... 172
at Santa Ana..... 192
below Prado Dam..... 188
near Mentone..... 146
Santa Ana River basin, schematic diagram of..... 144
Santa Ana River spreading diversion near Mentone 148
Santa Clara River, above railroad station, near Lang..... 228
at Los Angeles-Ventura County line..... 231
at Montalvo..... 244
Santa Cruz Creek near Santa Ynez..... 270
Santa Margarita Lake near Pozo..... 318
Santa Margarita River, at Ysidora..... 137
near Fallbrook..... 136
near Temecula..... 135
Santa Maria Creek near Ramona..... 120
Santa Maria River at Guadalupe..... 301
Santa Monica Creek basin, crest-stage partial-record stations in..... 501
Santa Paula Creek near Santa Paula..... 242
Santa Rita Creek near Templeton..... 321
Santa Ynez River, above Gibraltar Dam, near Santa Barbara..... 267
at Cooper's Reef, near Lompoc..... 278
at Jameson Lake, near Montecito..... 266
at narrows, near Lompoc..... 280
at Pine Canyon, near Lompoc..... 284
at Solvang..... 275
at 13th Street, near Lompoc..... 282
below Gibraltar Dam, near Santa Barbara..... 268
below Los Laureles Canyon, near Santa Ynez.... 269
near Buellton..... 277
near Santa Ynez..... 272
Santa Ynez River basin, crest-stage partial-record stations in..... 502
Santa Ysabel Creek, near Ramona..... 117
near San Pasqual..... 118
Santiago Creek, at Modjeska..... 190
at Santa Ana..... 191
Saratoga Creek at Saratoga..... 376
Saticoy diversion near Saticoy..... 243

Page
Scott Creek above Little Creek, near Davenport.. 363
Scott River, East Fork, above Kangaroo Creek, near Callahan..... 479
East Fork, at Callahan..... 480
below Houston Creek, near Callahan..... 478
near Fort Jones..... 482
Selected references..... 12
Sespe Creek, near Fillmore..... 240
near Wheeler Springs..... 239
Shasta River near Yreka..... 477
Silver Canyon Creek near Laws..... 84
Sisquoc River, near Garey..... 298
near Sisquoc..... 294
Smith River basin, crest-stage partial-record stations in..... 503
Smith River near Crescent City..... 499
Snow Creek near White Water..... 58
Sonoma Creek at Agua Caliente..... 413
Soquel Creek at Soquel..... 356
Special networks and programs..... 4
Spencer Canyon Creek near Fairmont..... 78
Stage-discharge relation, definition of..... 4
Stevens Creek Reservoir near Monte Vista..... 372
Sweetwater Reservoir near National City..... 110
Sweetwater River near Descanso..... 108
Sycamore Creek basin, crest-stage partial-record stations in..... 501

Tahquitz Creek near Palm Springs..... 60
Tar Spring Creek near Arroyo Grande..... 305
Temecula Creek, at Vail Dam..... 133
near Aguanga..... 132
Temescal Creek, at Corona..... 183
near Corona..... 182
Tenmile Creek near Laytonville..... 453
Tenmile River, Middle Fork, near Fort Bragg..... 436
Tepusquet Creek near Sisquoc..... 297
Terms and abbreviations, definition of..... 3
Tijuana River, near Dulzura..... 103
near Nestor..... 105
Topanga Creek near Topanga Beach..... 223
Toro Creek, near Morro Bay..... 309
near Pozo..... 316
Tres Pinos Creek near Tres Pinos..... 348
Trinity River, above Coffee Creek, near Trinity Center..... 487
at Hoopa..... 496
at Lewiston..... 490
near Burnt Ranch..... 492
North Fork, at Helena..... 491
South Fork, below Hyampom..... 494
Tujunga Creek, below Hansen Dam..... 212
near Sunland..... 210
Tulucay Creek at Napa..... 412

Upper Penitencia Creek at San Jose..... 382
Uvas Creek, above Uvas Reservoir, near Morgan Hill..... 344
at Sveadal..... 343
near Gilroy..... 346
Uvas Reservoir, contents of..... 341

Vail Lake, contents of..... 133
Vallecito Creek near Julian..... 54
Van Duzen River, near Bridgeville..... 461
near Dinsmores..... 460
Ventura River, near Meiners Oaks..... 248
near Ventura..... 253
Victoria Street drain at outlet, at Santa Barbara..... 258

Wagon Road Creek near Stauffer..... 287
Walker Creek near Tomales..... 419
Walnut Creek at Concord..... 405
Warm Creek floodway at San Bernardino..... 159
Wasteway No. 1 near Mecca..... 68
Waterman Canyon Creek near Arrowhead Springs.... 158
Whitewater River, at Indio..... 65
at White Water..... 56
near Mecca..... 66
Wildcat Creek at Richmond..... 399
Wildrose Creek near Wildrose Station..... 41
Willow Creek near Willow Creek..... 495
Wilson Creek tributary near Dulzura..... 100
Wittenberg Creek near Arroyo Grande..... 303
WRD, definition of..... 4
WSP, definition of..... 4

Zaca Creek near Buellton..... 276
Zayante Creek at Zayante..... 358

U. S. DEPARTMENT OF THE INTERIOR
Geological Survey
855 Oak Grove Avenue
Menlo Park, California 94025

POSTAGE AND FEES PAID
U.S. DEPARTMENT OF THE INTERIOR
INT 413

U.S.MAIL