Water Resources Data for California

Water Year 1975

Volume 1. Colorado River Basin, Southern Great Basin from Mexican Border to Mono Lake Basin, and Pacific Slope Basins from Tijuana River to Santa Maria River

U.S. GEOLOGICAL SURVEY WATER-DATA REPORT CA-75-1

Prepared in cooperation with the California Department of Water Resources and with other agencies

CALENDAR FOR WATER YEAR 1975

1974

OCTOBER

S	M	T	W	T	F	S
		1	2	3	4	5
6	7	8	9	10	11	12
13	14	15	16	17	18	19
20	21	22	23	24	25	26
27	28	29	30	31		

NOVEMBER

S	M	T	W	T	F	S
					1	2
3	4	5	6	7	8	9
10	11	12	13	14	15	16
17	18	19	20	21	22	23
24	25	26	27	28	29	30

DECEMBER

S	M	T	W	T	F	S
1	2	3	4	5	6	7
8	9	10	11	12	13	14
15	16	17	18	19	20	21
22	23	24	25	26	27	28
29	30	31				

1975

JANUARY

S	M	T	W	T	F	S
			1	2	3	4
5	6	7	8	9	10	11
12	13	14	15	16	17	18
19	20	21	22	23	24	25
26	27	28	29	30	31	

FEBRUARY

S	M	T	W	T	F	S
						1
2	3	4	5	6	7	8
9	10	11	12	13	14	15
16	17	18	19	20	21	22
23	24	25	26	27	28	

MARCH

S	M	T	W	T	F	S
						1
2	3	4	5	6	7	8
9	10	11	12	13	14	15
16	17	18	19	20	21	22
23	24	25	26	27	28	29
30	31					

APRIL

S	M	T	W	T	F	S
		1	2	3	4	5
6	7	8	9	10	11	12
13	14	15	16	17	18	19
20	21	22	23	24	25	26
27	28	29	30			

MAY

S	M	T	W	T	F	S
				1	2	3
4	5	6	7	8	9	10
11	12	13	14	15	16	17
18	19	20	21	22	23	24
25	26	27	28	29	30	31

JUNE

S	M	T	W	T	F	S
1	2	3	4	5	6	7
8	9	10	11	12	13	14
15	16	17	18	19	20	21
22	23	24	25	26	27	28
29	30					

JULY

S	M	T	W	T	F	S
		1	2	3	4	5
6	7	8	9	10	11	12
13	14	15	16	17	18	19
20	21	22	23	24	25	26
27	28	29	30	31		

AUGUST

S	M	T	W	T	F	S
					1	2
3	4	5	6	7	8	9
10	11	12	13	14	15	16
17	18	19	20	21	22	23
24	25	26	27	28	29	30
31						

SEPTEMBER

S	M	T	W	T	F	S
	1	2	3	4	5	6
7	8	9	10	11	12	13
14	15	16	17	18	19	20
21	22	23	24	25	26	27
28	29	30				

Water Resources Data for California

Water Year 1975

Volume 1. Colorado River Basin, Southern Great Basin from Mexican Border to Mono Lake Basin, and Pacific Slope Basins from Tijuana River to Santa Maria River

RECEIVED
MAR 16 1977
PUBLIC INQUIRIES OFFICE
U. S. GEOLOGICAL SURVEY
LOS ANGELES, CALIFORNIA

U.S. GEOLOGICAL SURVEY WATER-DATA REPORT CA-75-1

Prepared in cooperation with the California Department of Water Resources and with other agencies

BIBLIOGRAPHIC DATA SHEET	1. Report No. USGS/WRD/HD-76/059	2.	3. Recipient's Accession No.

4. Title and Subtitle Water Resources Data for California, 1975
Volume 1. Colorado River Basin, Southern Great Basin from Mexican Border to Mono Lake Basin, and Pacific Slope Basins from Tijuana River to Santa Maria River

5. Report Date December 1976

6.

7. Author(s) U.S. Geological Survey

8. Performing Organization Rept. No. USGS-WDR-CA-75-1

9. Performing Organization Name and Address
U.S. Geological Survey, Water Resources Division
California District
345 Middlefield Road
Menlo Park, Calif. 94025

10. Project/Task/Work Unit No.

11. Contract/Grant No.

12. Sponsoring Organization Name and Address
U.S. Geological Survey, Water Resources Division
California District
345 Middlefield Road
Menlo Park, Calif. 94025

13. Type of Report & Period Covered
Annual--Oct. 1, 1974 to Sept. 30, 1975

14.

15. Supplementary Notes
Prepared in cooperation with the California Department of Water Resources and with other agencies.

16. Abstracts

Volume 1 of water resources data for the 1975 water year for California consists of records of stage, discharge, and water quality of stream; stage, contents, and water quality in lakes and reservoirs; and water levels in wells. This report contains discharge records for 248 gaging stations; stage-only record for 1 gaging station; stage and contents for 21 lakes and reservoirs; water quality for 57 stations and 4 wells; water levels for 30 observation wells. Also included are 14 crest-stage partial-record stations. Additional water data were collected at various sites, not part of the systematic data collection program, and are published as special investigations and miscellaneous measurements. These data represent that part of the National Water Data System operated by the U.S. Geological Survey and cooperating State and Federal agencies in California.

17. Key Words and Document Analysis. 17a. Descriptors
*California, *Hydrologic data, *Surface water, *Water quality, *Ground water, Flow rate, Gaging stations, Lakes, Reservoirs, Chemical analyses, Sediment, Water temperatures, Sampling sites, water levels, water analyses.

17b. Identifiers/Open-Ended Terms

17c. COSATI Field/Group

18. Availability Statement	19. Security Class (This Report)	21. No. of Pages
No restriction on distribution. This report may be purchased from: National Technical Information Service Springfield, VA. 22161	UNCLASSIFIED	564
	20. Security Class (This Page) UNCLASSIFIED	22. Price

FORM NTIS-35 (REV. 10-73) ENDORSED BY ANSI AND UNESCO. THIS FORM MAY BE REPRODUCED USCOMM-DC 8265-P74

PREFACE

This report was prepared by the U.S. Geological Survey, in cooperation with the California Department of Water Resources and with other agencies, by personnel of the California District of the Water Resources Division under the supervision of Lee R. Peterson, District Chief, and W. H. Robinson, Regional Hydrologist, Western Region.

This report is one of a series issued State by State under the general direction of J. S. Cragwell, Jr., Chief Hydrologist, and G. W. Whetstone, Assistant Chief Hydrologist for Scientific Publications and Data Management.

Data for California are in four volumes as follows:

Volume 1. Colorado River Basin, Southern Great Basin from Mexican Border to Mono Lake Basin, and Pacific Slope Basins from Tijuana River to Santa Maria River

Volume 2. Pacific Slope Basins from Arroyo Grande to Oregon State Line except Central Valley

Volume 3. Southern Central Valley Basins and The Great Basin from Walker River to Truckee River

Volume 4. Northern Central Valley Basins and The Great Basin from Honey Lake Basin to Oregon State Line

UNITED STATES DEPARTMENT OF THE INTERIOR

THOMAS S. KLEPPE, Secretary

GEOLOGICAL SURVEY

V. E. McKelvey, Director

Prepared in cooperation with

California Department of Water Resources
Casitas Municipal Water District
Coachella Valley County Water District
Desert Water Agency
Imperial Irrigation District
Los Angeles County Flood Control District
Los Angeles Department of Water and Power
Montecito County Water District
Orange County Environmental Management Agency
Orange County Water District
Riverside County Flood Control and Water Conservation District
San Bernardino Valley Municipal Water District
San Diego City Water Utilities
San Diego County Department of Sanitation and Flood Control
Santa Barbara City Department of Public Works
Santa Barbara County Flood Control and Water Conservation District
Santa Barbara County Water Agency
Santa Maria Valley Water Conservation District
Santa Ynez River Water Conservation District
United Water Conservation District
Ventura County Flood Control District
Western Municipal Water District of Riverside County
Corps of Engineers, U.S. Army
U.S. Navy
Bureau of Reclamation, U.S. Department of the Interior
National Park Service, U.S. Department of the Interior

For additional information write to
District Chief, Water Resources Division
U.S. Geological Survey
855 Oak Grove Avenue
Menlo Park, California 94025

1976

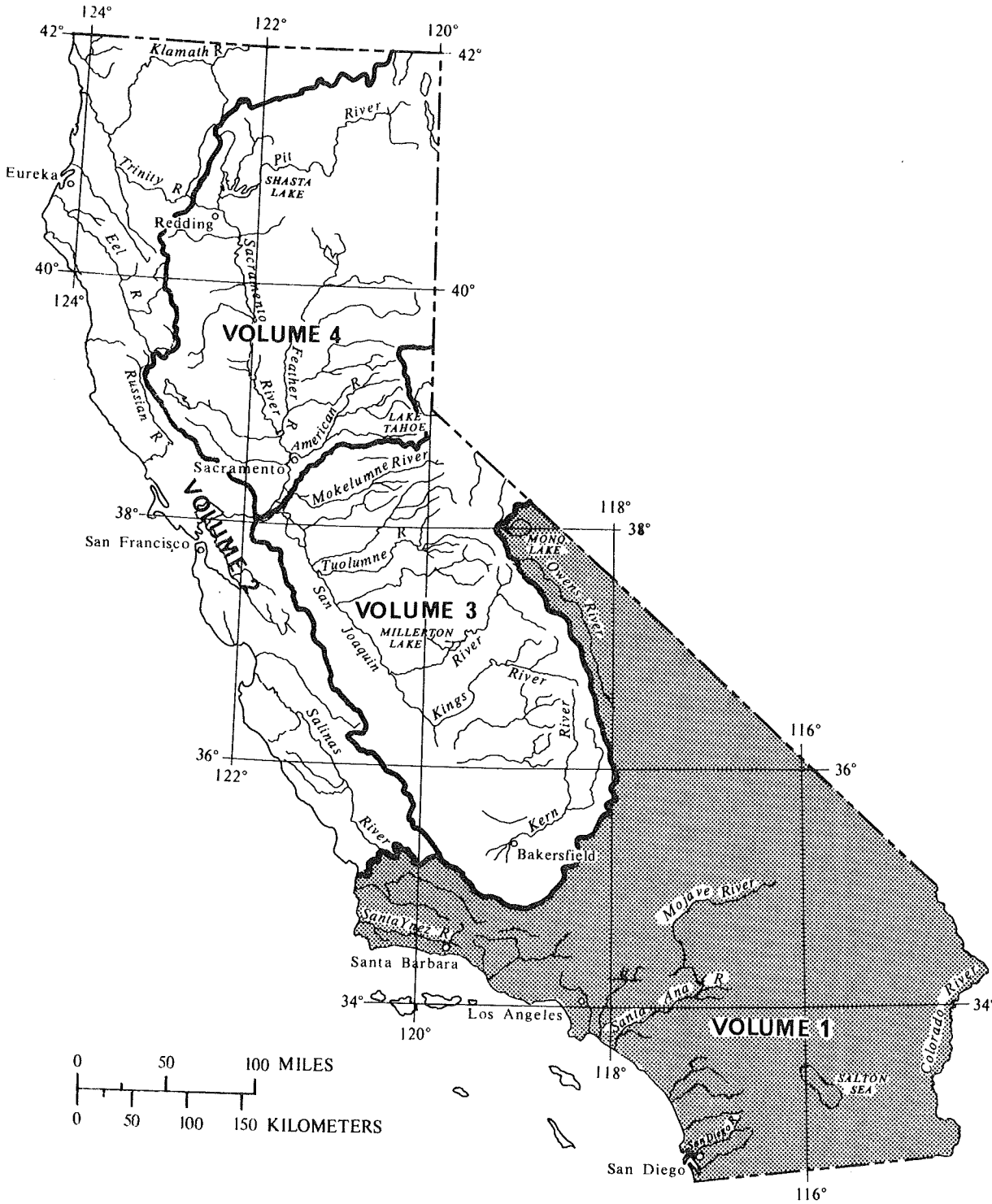

Area covered by volumes in the annual series on water-resources data for California. Area covered by this volume is shaded.

CONTENTS

	Page
Preface	III
List of surface-water and water-quality stations, in downstream order, for which records are published	IX
Introduction	1
Cooperation	2
Division of work	2
Definition of terms	3
Special networks and programs	10
Downstream order and station number	11
Numbering system for wells and miscellaneous sites	12
Local well numbers	12
Explanation of surface-water records	14
Collection and computation of data	14
Accuracy of data	17
Publications	17
Other data available	18
Records of discharge collected by agencies other than the Geological Survey	18
Explanation of water-quality records	18
Collection and examination of data	18
Biological and microbiological variables	20
Solutes	21
Temperature	22
Sediment	22
Turbidity	23
Publications	23
Explanation of ground-water level records	24
Collection of the data	24
Publications	24
Hydrologic conditions	25
Selected references	27
Gaging-station and water-quality records	30
Discharge at partial-record stations	531
Crest-stage partial-record stations	531
Discharge measurements at miscellaneous sites	533
Analyses of surface-water samples collected at water-quality partial-record stations	535
Analyses of ground-water samples	538
Ground-water levels listed by county	539
Index	545

ILLUSTRATIONS

		Page
Figure 1.	System for numbering wells and miscellaneous sites (latitude and longitude)	12
2.	Local well-numbering system	13
3.	Map of California showing runoff for the current water year	26
4.	Schematic diagram showing gaging stations on streams, diversions, and return flows between Imperial Dam, and the southerly international boundary	101
5-6.	Schematic diagrams showing diversions and storage:	
	5. Santa Ana River basin	269
	6. San Gabriel and Los Angeles River basin	371

TABLES

Table 1.	Factors for conversion of chemical constituents in milligrams or micrograms per liter to milliequivalents per liter	6
2.	Factors for conversion of sediment concentration in milligrams per liter to parts per million	6
3.	Degrees Celsius (°C) to degrees Fahrenheit (°F)	19
4.	Conversion of turbidity values, measured by Hach Turbidimeters Model 1860 or 2100 from parts per million or milligrams per liter of silica to Jackson turbidity units	23
5.	Factors for converting English units to International System (SI) units	29

CONTENTS

	Page
Preface	III
List of surface-water and water-quality stations, in downstream order, for which records are published	IX
Introduction	1
Cooperation	2
Division of work	2
Definition of terms	3
Special networks and programs	10
Downstream order and station number	11
Numbering system for wells and miscellaneous sites	12
Local well numbers	12
Explanation of surface-water records	14
Collection and computation of data	14
Accuracy of data	17
Publications	17
Other data available	18
Records of discharge collected by agencies other than the Geological Survey	18
Explanation of water-quality records	18
Collection and examination of data	18
Biological and microbiological variables	20
Solutes	21
Temperature	22
Sediment	22
Turbidity	23
Publications	23
Explanation of ground-water level records	24
Collection of the data	24
Publications	24
Hydrologic conditions	25
Selected references	27
Gaging-station and water-quality records	30
Discharge at partial-record stations	531
Crest-stage partial-record stations	531
Discharge measurements at miscellaneous sites	533
Analyses of surface-water samples collected at water-quality partial-record stations	535
Analyses of ground-water samples	538
Ground-water levels listed by county	539
Index	545

ILLUSTRATIONS

		Page
Figure 1.	System for numbering wells and miscellaneous sites (latitude and longitude)	12
2.	Local well-numbering system	13
3.	Map of California showing runoff for the current water year	26
4.	Schematic diagram showing gaging stations on streams, diversions, and return flows between Imperial Dam, and the southerly international boundary	101
5-6.	Schematic diagrams showing diversions and storage:	
	5. Santa Ana River basin	269
	6. San Gabriel and Los Angeles River basin	371

TABLES

Table 1.	Factors for conversion of chemical constituents in milligrams or micrograms per liter to milliequivalents per liter	6
2.	Factors for conversion of sediment concentration in milligrams per liter to parts per million	6
3.	Degrees Celsius (°C) to degrees Fahrenheit (°F)	19
4.	Conversion of turbidity values, measured by Hach Turbidimeters Model 1860 or 2100 from parts per million or milligrams per liter of silica to Jackson turbidity units	23
5.	Factors for converting English units to International System (SI) units	29

SURFACE-WATER AND WATER-QUALITY STATIONS,
IN DOWNSTREAM ORDER, FOR WHICH RECORDS ARE PUBLISHED

[Letters after station name designate type of data:
(d), discharge; (l), lake contents; (c), chemical; (b), biological;
(t), water temperature; and (s), sediment]

Page

COLORADO RIVER BASIN
COLORADO RIVER:
Colorado River below Hoover Dam, Ariz.-Nev. (dc) 30
Colorado River below Davis Dam, Ariz.-Nev. (dc) 35
Colorado River at Needles (d) 37
Colorado River near Topock, Ariz. (d) 38
LAKE HAVASU:
DIVERSION FROM LAKE HAVASU
Colorado River aqueduct near Parker Dam, Ariz.-Calif. (dc) 40
Colorado River aqueduct near San Jacinto (cbs) 42
Lake Havasu near Parker Dam, Ariz.-Calif. (l) 52
Colorado River below Parker Dam, Ariz.-Calif. (dc) 54
TRIBUTARIES AND DIVERSIONS BETWEEN PARKER DAM AND PALO VERDE DAM
Palo Verde Canal near Blythe (dc) 57
Colorado River at Palo Verde Dam, Ariz.-Calif. (d) 60
Palo Verde Irrigation District Olive Lake drain near Blythe (c) 61
Palo Verde Irrigation District Outfall drain near Palo Verde (c) 62
Palo Verde Irrigation District Anderson drain near Palo Verde (c) 64
Colorado River above Imperial Dam, Ariz.-Calif. (dcbt) 65
Colorado River below Imperial Dam, Ariz.-Calif. (d) 74
Colorado River below Laguna Dam, Ariz.-Calif. (dc) 75
Colorado River below Yuma Main Canal wasteway, at Yuma, Ariz. (d) 78
Colorado River at northerly international boundary, above Morelos Dam, near Andrade (dcb) 79
DIVERSIONS AND RETURN FLOWS AT AND BELOW IMPERIAL DAM
Gila Gravity Main Canal at Imperial Dam, Ariz.-Calif. (dct) 89
All-American Canal near Imperial Dam, Ariz.-Calif. (d) 92
Pilot Knob powerplant and wasteway near Pilot Knob (d) 93
All-American Canal below Pilot Knob wasteway (d) 94
Return surface flows below Imperial Dam, Ariz.-Calif. (d) 95
THE GREAT BASIN
PANAMINT VALLEY
Wildrose Creek near Wildrose Station (d) 102
Darwin Creek near Darwin (d) 104
DEATH VALLEY
Salt Creek near Stovepipe Wells (d) 105
Amargosa River at Tecopa (d) 106
BRISTOL LAKE BASIN
Caruthers Creek near Ivanpah (d) 107
SALTON SEA BASIN
Salton Sea near Westmorland (l) 108
Inflow to Salton Sea (d) 108
Salt Creek near Mecca (d) 109
Alamo River near Niland (d) 110
New River at international boundary, at Calexico (cbts) 111
New River near Westmorland (d) 124
San Felipe Creek near Julian (d) 125
Coyote Creek near Borrego Springs (d) 126
Borrego Palm Creek near Borrego Springs (d) 127
Carrizo Creek:
Vallecito Creek near Julian (d) 128
San Felipe Creek near Westmorland (d) 129
Whitewater River at White Water (dc) 130
San Gorgonio River near White Water (d) 132
Snow Creek near White Water (d) 133
Mission Creek near Desert Hot Springs (d) 134
Chino Canyon Creek near Palm Springs (d) 135

SURFACE-WATER AND WATER-QUALITY STATIONS,
IN DOWNSTREAM ORDER, FOR WHICH RECORDS ARE PUBLISHED

Page

THE GREAT BASIN--Continued
SALTON SEA BASIN--Continued
New River:
Morongo Wash:
Tahquitz Creek near Palm Springs (d) 136
Palm Canyon Creek near Palm Springs (d) 137
Andreas Creek near Palm Springs (d) 138
Deep Creek near Palm Desert (d) 139
Whitewater River at Indio (d) 140
Whitewater River near Mecca (d) 141
Wasteway No. 1 near Mecca (d) 142
MOJAVE RIVER BASIN
Deep Creek (head of Mojave River) near Hesperia (d) 143
West Fork Mojave River near Hesperia (d) 144
Mojave River at lower narrows, near Victorville (dcbts) 145
Mojave River near Hodge (d) 154
Mojave River at Barstow (d) 155
Mojave River at Afton (d) 156
ANTELOPE VALLEY
Big Rock Creek near Valyermo (dt) 157
Little Rock Creek near Little Rock (d) 160
Oak Creek near Mojave (d) 161
KOEHN LAKE BASIN
Pine Tree Creek near Mojave (d) 162
OWENS LAKE BASIN
Owens River:
Convict Creek near Mammoth Lakes (d) 163
Rock Creek at Little Round Valley, near Bishop (d) 164
Pine Creek at division box, near Bishop (d) 165
Silver Canyon Creek near Laws (d) 166
Bishop Creek below powerplant No. 6, near Bishop (d) 167
Big Pine Creek near Big Pine (d) 168
Owens River below Tinemaha Reservoir, near Big Pine (dcbts) 170
Los Angeles Aqueduct at outlet at San Fernando (c) 184
Independence Creek below Pinyon Creek, near Independence (d) 186
Owens River at Keeler Bridge, near Lone Pine (d) 187
Cottonwood Creek near Olancha (d) 188
MONO LAKE BASIN
Mono Lake near Mono Lake (1) 190
Mill Creek below Lundy Lake, near Mono Lake (d) 191
Rush Creek below Agnew Lake, near June Lake (d) 192
Rush Creek above Grant Lake, near June Lake (d) 193
Lee Vining Creek near Lee Vining (d) 194
PACIFIC SLOPE BASINS IN CALIFORNIA
TIJUANA RIVER BASIN
Cottonwood Creek (head of Tijuana River) above Tecate Creek, near Dulzura (d) 195
Tecate Creek:
Campo Creek near Campo (d) 196
Tijuana River near Dulzura (d) 197
Rodriguez Reservoir at Rodriguez Dam, Baja California, Mexico (1) 198
Tijuana River near Nestor (ds) 199
OTAY RIVER BASIN
Jamul Creek (head of Otay River) near Jamul (d) 202
Lower Otay Reservoir near Chula Vista (1) 203
SWEETWATER RIVER BASIN
Sweetwater River near Descanso (d) 204
Sweetwater Reservoir near National City (1) 205
SAN DIEGO RIVER BASIN
El Capitan Reservoir near Lakeside (1) 206
San Vicente Reservoir near Lakeside (1) 207
San Diego River near Santee (dts) 208

Page

PACIFIC SLOPE BASINS IN CALIFORNIA--Continued
LOS PENASQUITOS CREEK BASIN
Poway Creek (head of Los Penasquitos Creek):
Pomerado Creek at Poway Road, near Poway (d) 213
Los Penasquitos Creek below Poway Creek, near Poway (d) 214
Los Penasquitos Creek near Poway (d) 215
SAN DIEGUITO RIVER BASIN
Santa Ysabel Creek (head of San Dieguito River) near Ramona (d) 216
Santa Ysabel Creek near San Pasqual (d) 217
Guejito Creek near San Pasqual (d) 218
Santa Maria Creek near Ramona (d) 219
Lake Hodges near Escondido (l) 220
ESCONDIDO CREEK BASIN
Lake Wholford near Escondido (l) 221
SAN LUIS REY RIVER BASIN
San Luis Rey River:
Agua Caliente Creek near Warner Springs (d) 222
West Fork San Luis Rey River near Warner Springs (d) 223
Pauma Creek near Pauma Valley (d) 224
San Luis Rey River at Monserate Narrows, near Pala (d) 226
Keys Creek:
Keys Creek tributary at Valley Center (d) 227
San Luis Rey River near Bonsall (d) 228
San Luis Rey River at Oceanside (dts) 229
SANTA MARGARITA RIVER BASIN
Temecula Creek (head of Santa Margarita River) near Aguanga (d) 233
Temecula Creek at Vail Dam (l) 234
Murrieta Creek at Temecula (d) 235
Santa Margarita River near Temecula (d) 236
Santa Margarita River near Fallbrook (dc) 237
Santa Margarita River at Ysidora (ds) 239
LAS FLORES CREEK BASIN
Las Flores Creek near Oceanside (d) 240
SAN JUAN CREEK BASIN
San Juan Creek at San Juan Capistrano (dts) 241
Arroyo Trabuco:
Oso Creek at Crown Valley Parkway, near Mission Viejo (d) 246
Arroyo Trabuco at San Juan Capistrano (dts) 247
ALISO CREEK BASIN
Aliso Creek at El Toro (d) 252
SAN DIEGO CREEK BASIN
(Formerly reported as PETERS CANYON WASH BASIN, in error)
San Diego Creek near Irvine (cts) 253
Peters Canyon Wash:
El Modena-Irvine Channel near Irvine (dts) 259
San Diego Creek at Lane Road, near Irvine (dts) 264
SANTA ANA RIVER BASIN
Santa Ana River:
Bear Creek:
Big Bear Lake near Big Bear Lake (l) 270
Santa Ana River near Mentone (d) 271
Santa Ana River spreading diversion near Mentone (d) 273
Mill Creek near Yucaipa (d) 274
Plunge Creek near East Highlands (d) 276
Warm Creek:
City Creek near Highland (d) 278
San Timoteo Creek:
Little San Gorgonio Creek near Beaumont (d) 280
San Timoteo Creek near Redlands (d) 281
San Timoteo Creek near Loma Linda (d) 282
Warm Creek:
East Twin Creek near Arrowhead Springs (d) 283
Waterman Canyon Creek near Arrowhead Springs (d) 284

SURFACE-WATER AND WATER-QUALITY STATIONS,
IN DOWNSTREAM ORDER, FOR WHICH RECORDS ARE PUBLISHED

Page

PACIFIC SLOPE BASINS IN CALIFORNIA--Continued
SANTA ANA RIVER BASIN--Continued
Warm Creek floodway at San Bernardino (d) 285
San Bernardino Water Quality Control Plant at San Bernardino (dc) 286
Santa Ana River at E Street, near San Bernardino (d) 290
Warm Creek near San Bernardino (d) 291
Meeks and Daley Canal near Colton (d) 292
Lytle Creek near Fontana (d) 293
Cajon Creek:
Lone Pine Creek near Keenbrook (d) 295
Cajon Creek below Lone Pine Creek, near Keenbrook (d) 296
Devil Canyon Creek near San Bernardino (d) 297
Lytle Creek at Colton (d) 298
Santa Ana River at Mission Boulevard, at Riverside (d) 299
Santa Ana River at MWD Crossing, near Arlington (dc) 300
Riverside Water Quality Control Plant at Riverside Narrows, near Arlington (dc) 303
Santa Ana River at Prado Park, near Corona (d) 307
San Jacinto River:
Lake Hemet near Idyllwild (l) 308
San Jacinto River near San Jacinto (d) 309
Bautista Creek near Valle Vista (d) 311
Perris Valley storm drain at Nuevo Road, near Perris (d) 312
San Jacinto River at Railroad Canyon weir, near Elsinore (d) 313
Salt Creek at Railroad Canyon Reservoir, near Elsinore (d) 314
San Jacinto River near Elsinore (d) 315
Temescal Creek near Corona (d) 316
Chino Creek:
San Antonio Creek below San Antonio Dam (d) 317
Rialto pipeline below San Antonio Dam, near Claremont (c) 318
Chino Creek at Schaefer Avenue, near Chino (dc) 319
Cucamonga Creek near Upland (d) 321
Cucamonga Creek near Mira Loma (d) 322
Santa Ana River below Prado Dam (dcbts) 323
Santa Ana River at Imperial Highway, near Anaheim (dts) 344
Santa Ana Spreading Diversion below Imperial Highway, near Anaheim(c) 350
Carbon Creek below Carbon Canyon Dam (d) 353
Santa Ana River near Katella Avenue, at Orange (dts) 354
Santiago Creek at Modjeska (d) 359
Santiago Creek at Santa Ana (d) 360
Santa Ana River at Santa Ana (dts) 361
Santa Ana River at Adams Avenue, near Costa Mesa (dts) 366
SAN GABRIEL RIVER BASIN
East Fork San Gabriel River (head of San Gabriel River) near Camp Bonita (d) 372
West Fork San Gabriel River at Camp Rincon (d) 373
San Gabriel River at Azusa powerhouse, at Azusa (c) 374
Fish Creek near Duarte (d) 376
San Gabriel River below Santa Fe Dam, near Baldwin Park (d) 377
Walnut Creek:
Dalton Creek:
San Dimas Creek below San Dimas Dam (d) 378
San Jose Creek near El Monte (d) 379
San Gabriel River above Whittier Narrows Dam (d) 380
San Gabriel River at Whittier Narrows (c) 381
San Gabriel River at Pico (d) 382
San Gabriel River at Spring Street, near Los Alamitos (d) 383
Coyote Creek:
Brea Creek below Brea Dam, near Fullerton (d) 384
Fullerton Creek below Fullerton Dam, near Brea (d) 385
Fullerton Creek at Richman Avenue, at Fullerton (d) 386
Coyote Creek at Los Alamitos (d) 387

Page

PACIFIC SLOPE BASINS IN CALIFORNIA--Continued
LOS ANGELES RIVER BASIN
Los Angeles River at Sepulveda Dam (d) 388
Pacoima Creek near San Fernando (d) 389
Big Tujunga Creek near Sunland (d) 390
Tujunga Creek below Hansen Dam (d) 391
Los Angeles River at Feliz Boulevard, Los Angeles (c) 392
Los Angeles River at Los Angeles (d) 394
Arroyo Seco near Pasadena (d) 395
Los Angeles River near Downey (d) 396
Rio Hondo above Whittier Narrows Dam (d) 397
Rio Hondo near Montebello (d) 398
Mission Creek near Montebello (d) 399
Rio Hondo below Whittier Narrows Dam (d) 400
Rio Hondo near Downey (d) 401
Los Angeles River at Long Beach (d) 402
Los Angeles River at Willow Street Bridge, at Long Beach (cbts) 403
BALLONA CREEK BASIN
Ballona Creek near Culver City (d) 414
TOPANGA CREEK BASIN
Topanga Creek near Topanga Beach (d) 415
MALIBU CREEK BASIN
Malibu Creek at Crater Camp, near Calabasas (d) 416
CALLEGUAS CREEK BASIN
Calleguas Creek:
Arroyo Simi near Simi (d) 417
Conejo Creek above Highway 101, near Camarillo (d) 418
Calleguas Creek at Camarillo State Hospital (dts) 419
SANTA CLARA RIVER BASIN
Santa Clara River above railroad station, near Lang (d) 424
Bouquet Creek near Saugus (d) 425
Castaic Creek near Saugus (d) 426
Santa Clara River at Los Angeles-Ventura County line (dcts) 427
Piru Creek below Thorn Meadows, near Sauffer (d) 436
Lockwood Creek:
Middle Fork Lockwood Creek near Stauffer (d) 437
Lockwood Creek at Gorge, near Stauffer (d) 438
Piru Creek above Frenchmans Flat (c) 439
Piru Creek above Lake Piru (dc) 441
Lake Piru near Piru (1) 444
Piru Creek below Santa Felicia Dam (dc) 445
Hopper Creek near Piru (d) 448
Sespe Creek near Wheeler Springs (dt) 449
Sespe Creek near Fillmore (dcts) 452
Santa Paula Creek near Santa Paula (dc) 460
Saticoy diversion near Saticoy (dc) 464
Santa Clara River at Montalvo (dts) 467
VENTURA RIVER BASIN
Matilija Creek (head of Ventura River):
Matilija Reservoir at Matilija Hot Springs (1) 472
Matilija Creek at Matilija Hot Springs (dc) 473
North Fork Matilija Creek at Matilija Hot Springs (d) 475
Ventura River near Meiners Oaks (d) 476
San Antonio Creek at Casitas Springs (d) 477
Coyote Creek near Oak View (d) 478
Santa Ana Creek near Oak View (d) 479
Coyote Creek near Ventura (d) 480
Ventura River near Ventura (dcts) 481
CARPINTERIA CREEK BASIN
Carpinteria Creek near Carpinteria (d) 487
FRANKLIN CREEK BASIN
Franklin Creek at Carpinteria (d) 488

Page

PACIFIC SLOPE BASINS IN CALIFORNIA--Continued
MISSION CREEK BASIN
Mission Creek near Mission Street, at Santa Barbara (d) 489
Victoria Street drain at outlet, at Santa Barbara (d) 490
ARROYO BURRO CREEK BASIN
Arroyo Burro Creek at Santa Barbara (d) 491
Maria Ygnacio Creek at University Drive, near Goleta (d) 492
Atascadero Creek near Goleta (d) 493
SAN JOSE CREEK BASIN
San Jose Creek near Goleta (d) 494
San Jose Creek at Goleta (d) 495
GAVIOTA CREEK BASIN
Gaviota Creek near Gaviota (d) 496
JALAMA CREEK BASIN
Jalama Creek near Lompoc (d) 497
SANTA YNEZ RIVER BASIN
Santa Ynez River at Jameson Lake, near Montecito (1) 498
Santa Ynez River above Gibraltar Dam, near Santa Barbara (1) 499
Santa Ynez River below Gibraltar Dam, near Santa Barbara (d) 500
Santa Ynez River below Los Laureles Canyon, near Santa Ynez (d) 501
Santa Cruz Creek near Santa Ynez (d) 502
Lake Cachuma near Santa Ynez (1) 503
Santa Ynez River near Santa Ynez (d) 504
Alamo Pintado Creek near Solvang (d) 505
Alisal Reservoir near Solvang (1) 506
Santa Ynez River at Solvang (d) 507
Zaca Creek near Buellton (d) 508
Santa Ynez River at Cooper's Reef, near Lompoc (d) 509
Salsipuedes Creek near Lompoc (d) 510
Santa Ynez River at narrows, near Lompoc (d) 511
Purisima Creek near Lompoc (d) 512
Santa Ynez River at 13th Street, near Lompoc (d) 513
Miguelito Creek at Lompoc (d) 514
Santa Ynez River at Pine Canyon, near Lompoc (d) 515
SAN ANTONIO CREEK BASIN
San Antonio Creek at Los Alamos (d) 516
San Antonio Creek near Casmalia (d) 517
SANTA MARIA RIVER BASIN
Cuyama River (head of Santa Maria River):
Wagon Road Creek near Stauffer (d) 518
Reyes Creek near Ventucopa (d) 519
Cuyama River below Buckhorn Canyon, near Santa Maria (d) 520
Alamo Creek near Nipomo (d) 521
Huasna River near Arroyo Grande (d) 522
Cuyama River below Twitchell Dam (dc) 523
Sisquoc River near Sisquoc (d) 525
Tepusquet Creek near Sisquoc (d) 526
Sisquoc River near Garey (d) 527
Bradley ditch near Donovan Road, at Santa Maria (d) 528
Blosser ditch near Donovan Road, at Santa Maria (d) 529
Santa Maria River at Guadalupe (d) 530

WATER RESOURCES DATA FOR CALIFORNIA, 1975

Volume 1

INTRODUCTION

Water-resources data for the 1975 water year for California consist of records of streamflow and contents of reservoirs at gaging stations, partial-record stations, and miscellaneous sites; records of water quality including the physical, chemical, and biological characteristics of surface and ground water; and records of water levels in selected observation wells. Records for a few pertinent streamflow and water-quality stations in bordering States are also included. The records were collected and computed by the Water Resources Division of the U.S. Geological Survey under the direction of Lee R. Peterson, district chief; Winchell Smith, assistant district chief for hydrologic data; and Leonard N. Jorgensen, chief of the basic data section. These data represent that part of the National Water Data System collected by the Geological Survey and cooperating local, State, and Federal agencies in California.

Records of discharge (or stage) of streams, and contents (or stage) of lakes and reservoirs were first published in a series of U.S. Geological Survey water-supply papers entitled, "Surface Water Supply of the United States." Through water year 1960, these water-supply papers were in an annual series and then in a 5-year series for 1961-65 and 1966-70. Records of chemical quality, water temperatures, and suspended sediment were published from 1941 to 1970 in an annual series of water-supply papers entitled, "Quality of Surface Waters of the United States." Records of ground-water levels were published from 1935 to 1974 in a series of water-supply papers entitled, "Ground-Water Levels in the United States."

Beginning with the 1961 water year and continued through water year 1974, streamflow data have been released by the Geological Survey in annual reports on a State-boundary basis. Water-quality records beginning with the 1964 water year, and ground-water data since the 1971 water year have been similarly released either in separate reports or in conjunction with streamflow records. These reports provided rapid release of preliminary water data shortly after the end of the water year. The final data were then released in the water-supply paper series mentioned above. Beginning with the 1975 water year, water data will be released on a State-boundary basis in final form and will not be republished in the water-supply paper series. The 1975 and subsequent water year reports will be in a series which will carry an identification number consisting of the two-letter State abbreviation, the last two digits of the water year, and the volume number. For example, this report is identified as "U.S. Geological Survey Water-Data Report CA-75-1." These reports are for sale to the public for a nominal fee from the National Technical Information Service, U.S. Department of Commerce, Springfield, Virginia, 22161. For more information on publications available, see "Publications" on subsequent pages.

COOPERATION

The U.S. Geological Survey and organizations of the State of California have had cooperative agreements for the systematic collection of records since 1903. Organizations that supplied data are acknowledged in station descriptions. Organizations that assisted in collecting data through cooperative agreement with the Survey are:

California Department of Water Resources, R. B. Robie, director.
Casitas Municipal Water District, Robert McKinney, general manager-chief engineer.
Coachella Valley County Water District, L. O. Weeks, general manager-chief engineer.
Desert Water Agency, P. G. Payne, general manager.
Imperial Irrigation District, R. F. Carter, general manager.
Los Angeles County Flood Control District, C. F. Eshelby, division engineer.
Los Angeles Department of Water and Power, Louis H. Winnard, general manager and chief engineer.
Montecito County Water District, H. O. Neil Mendenall, general manager.
Orange County Environmental Management Agency, H. G. Osborne, director.
Orange County Water District, Neil G. Cline, secretary-manager.
Riverside County Flood Control and Water Conservation District, J. W. Bryant, chief engineer.
San Bernardino Valley Municipal Water District, J. A. Beaver, general manager.
San Diego, City of, Water Utilities, R. W. King, director.
San Diego, County of, Department of Sanitation and Flood Control, C. J. Houson, director.
Santa Barbara, City of, Department of Public Works, R. W. Puddicombe, director.
Santa Barbara County Flood Control and Water Conservation District, James Stubchaer, flood-control engineer.
Santa Barbara County Water Agency, Harrell Fletcher, board of directors chairman.
Santa Maria Valley Water Conservation District, M. F. Twitchell, secretary.
Santa Ynez River Water Conservation District, William Laranjo, president.
United Water Conservation District, R. A. Smith, general manager-chief engineer.
Ventura County Flood Control District, A. P. Stokes, engineer-manager.
Western Municipal Water District of Riverside County, H. A. Hicks, general manager.

Assistance in the form of funds or services was given by the Corps of Engineers, U.S. Army; U.S. Navy; Bureau of Reclamation and National Park Service, U.S. Department of the Interior.

The following organizations aided in collecting records: Bear Valley Mutual Water Co., Metropolitan Water District of Southern California, Fontana Union Water Co., Rancho California, Southern California Edison Co., and Vista Irrigation District.

DIVISION OF WORK

Responsibility for collection of data and preparation of data reports is delegated to the three subdistrict offices in the California District of the Water Resources Division. This volume was prepared by personnel of the Laguna Niguel subdistrict office under the direction of D. H. Appel, subdistrict chief. Special acknowledgment is made of the contribution of R. J. Longfield who directs the work in the hydrologic data section. Report data were provided by the Santa Barbara field office, South Coast and Desert field group, and Santa Ana field group supervised by J. A. Singer, D. F. Thoreson, and H. R. Frisbie. Sediment data field collection and record computation were under the direction of Rhea P. Williams. Ground-water water-level monitoring, ground-water water-quality sampling, and data handling were under the supervision of Frank W. Giessner. Elenere A. Amidon supervised computer processing and assisted in review of data for publication. Manuscript typing and assembly of the report was done by the records processing unit under the supervision of A. L. Davis.

DEFINITION OF TERMS

Terms related to streamflow, water-quality, ground-water, and other hydrologic data, as used in this report, are defined below. See also table 5 for converting English units to International System of units (SI).

Acre-foot (AC-FT, acre-ft) is the quantity of water required to cover 1 acre to a depth of 1 foot and is equivalent to 43,560 cubic feet or about 326,000 gallons or 1,233 cubic meters.

Algae are single-celled, colonial, or multicelled plants, which are mostly aquatic, containing chlorophyll and lacking roots, stems, and leaves.

Aquifer is a geologic formation, group of formations, or part of a formation that contains sufficient permeable material to yield significant quantities of water to wells and springs.

Artesian is synonymous with confined. Artesian water and artesian water body are equivalent respectively to confined ground water and confined water body.

Artesian well is a well deriving its water from an artesian or confined water body. The water level in an artesian well stands above the top of the artesian water body it taps.

Bacteria are the microscopic unicellular organisms, typically spherical, rodlike, or spiral and threadlike in shape, often clumped into colonies.

Total coliform bacteria are a particular group of bacteria that are used as indicators of possible sewage pollution. They are described as aerobic, and facultative anaerobic, gram-negative, nonspore-forming, rod-shaped bacteria which ferment lactose with gas formation within 48 hours at 35°C (degrees Celsius).

Fecal coliform bacteria are the coliform bacteria group that are present in the intestine or feces of warmblooded animals. They are often used as an indicator of the sanitary quality of the water.

Fecal streptococcal bacteria are a group of bacteria found in the intestine of warmblooded animals. Their presence in water is considered to verify fecal pollution. They are defined as gram-positive, cocci bacteria that are capable of growth in brain-heart infusion broth.

Benthic organisms (invertebrates) are the group of animals inhabiting the bottom of an aquatic environment. They include a number of types of organisms, such as bacteria, fungi, insect larvae and nymphs, snails, clams, and crayfish.

Biochemical oxygen demand (BOD) is a measure of the quantity of dissolved oxygen, in milligrams per liter, used in the decomposition of organic matter by microorganisms, such as bacteria.

Biomass is the amount of living matter present at any given time.

Ash weight is the weight or amount of residue present after the material from the dry weight determination has been ashed in a muffle furnace at a temperature of 500°C for 1 hour.

Dry weight refers to the weight or amount of material present after drying in an oven at a particular temperature, for example 60°C for zooplankton and 105°C for periphyton, until a constant weight is obtained.

Organic weight or volatile weight of the living substance is the difference between the dry weight and the ash weight, and represents the actual weight of the living matter.

Wet weight is the weight of living mater, plus its contained water.

Carotene refers to any of several yellow to red pigments occurring in plants and in the fatty tissues of plant-eating animals.

Chemical oxygen demand (COD) indicates the quantity of oxidizable compounds in water and varies with water composition(s), temperature, period of contact, and other factors.

Chlorophyll refers to the green pigments of plants. Chlorophyll a and b are the two most common green pigments in plants.

Contents is the volume of water in a reservoir or lake. Unless otherwise indicated, volume is computed on the basis of a level pool and does not include bank storage.

Control designates a feature downstream from the gage that determines the stage-discharge relation at the gage. This feature may be a natural constriction of the channel, an artificial structure, or a uniform cross section over a long reach of the channel.

Cubic foot per second (FT^3/S, ft^3/s), is the rate of discharge representing a volume of 1 cubic foot passing a given point during 1 second and is equivalent to approximately 7.48 gallons per second or 448.8 gallons per minute or 0.02832 cubic meters per second.

Discharge is the volume of water (or more broadly, total fluids) that passes a given point within a given period of time.

Mean discharge is the arithmetic average of discharge during a specific period.

Instantaneous discharge is the discharge at a given time.

Dissolved refers to the amount of a substance present in true chemical solution. In practice, however, the term includes all forms of the substance that will pass through a 0.45-micrometer membrane filter, and thus may include some very small (colloidal) suspended particles. Analyses are performed on filtered samples.

Diversity index (Shannon and Weaver, 1949) is a numerical rating of the variety of the aquatic organisms. The formula for diversity index is $\bar{d} = \sum_{i=i}^{s} \frac{n_i}{n} \log_2 \frac{n_i}{n}$ where n_i is the number of individuals per taxon, n is the total number of individuals, and s is the total number of taxa. Diversity index values range from 0 when all the organisms in the samples are the same to some positive number when some or all the organisms in the sample are different.

Drainage area of a stream at a specified location is that area, measured in a horizontal plane, enclosed by a topographic divide from which direct surface runoff from precipitation normally drains by gravity into the stream above the specified point. Figures of drainage area given therein include all closed basins, or noncontributing areas, within the area unless otherwise noted.

Drainage basin is a part of the surface of the earth that is occupied by a drainage system, which consists of a surface stream or body of impounded surface water together with all tributary surface streams and bodies of impounded surface water.

Ft^3/s-day is the volume of water represented by a flow of 1 cubic foot per second for 24 hours. It is equivalent to 86,400 cubic feet, approximately 1.9835 acre-feet, or about 646,000 gallons or 2,445 cubic meters. It represents a runoff of approximately 0.0372 inch from 1 square mile or 0.3468 millimeter from 1 square kilometer.

Gage height is the water-surface elevation referred to some arbitrary gage datum. Gage height is often used interchangeably with the more general term "stage," although gage height is more appropriate when used with a reading on a gage.

Gaging station is a particular site on a stream, canal, lake, or reservoir where systematic observations of gage height or discharge are obtained. When used in connection with a discharge record, the term is applied only to those gaging stations where a continuous record of discharge is computed.

Hardness of water is a physical-chemical characteristic that is commonly recognized by the increased quantity of soap that is required to produce lather. It is attributable to the presence of alkaline earths (principally calcium and magnesium) and is expressed as equivalent calcium and carbonate ($CaCO_3$).

Macrophytes are the macroscopic plants in the aquatic environment. The most common macrophytes are the rooted vascular plants that are usually arranged in zones in aquatic ecosystems and restricted in area by the extent of illumination through the water and sediment deposition along the shoreline.

Metamorphic stage refers to the stage of development that an organism exhibits during its transformation from an immature form to an adult. Examples of metamorphic stages of insects are egg-larva-pupa-adult or egg-nymph-adult.

Methylene blue active substance (MBAS) is a measure of apparent detergents. This determination depends on the formation of a blue color when methylene blue dye reacts with synthetic detergent compounds.

Micrograms per liter (UG/L, ug/l) is a unit expressing the concentration of chemical constituents in solution as weight of solute per unit volume (liter) of water and as the concentration of plant pigments, such as chlorophyll, as weight of pigment per unit volume (liter) of water. One thousand micrograms per liter is equivalent to one milligram per liter.

Milligrams per liter (MG/L, mg/l) is a unit for expressing the concentration of chemical constituents in solution and the weight of suspended matter. Milligrams per liter represents the weight of solute per unit volume of water. Milligrams or micrograms per liter may be converted to milliequivalents (one thousandth of a gram-equivalent weight of a constituent) per liter by multiplying by the factors in table 1. Concentration of suspended sediment also is expressed in milligrams per liter, and is based on the weight of sediment per liter of water-sediment mixture. Sediment concentrations may be converted to parts per million by using factors in table 2. Dry weight, ash weight, and organic weight values of suspended matter (seston) are expressed in milligrams per liter.

Nekton are the consumers of the aquatic environment consisting of large free-swimming organisms that are capable of sustained, directed mobility.

Organism is any living entity, such as an insect, phytoplankter, or zooplankter.

Cells/volume (cells/ml, cells/l) refers to the number of phytoplankton that are counted by using a microscope and grid or counting cell. Multicelled phytoplankton are counted by enumerating all the individual contained cells in the filament or colony.

Organism count/area (organisms/m^2, organisms/acre, or organisms/ha) refers to the number of organisms collected and enumerated in a sample and adjusted to the number per unit area of the habitat. Periphyton, benthic organisms, and macrophytes are expressed in these terms.

Table 1.--Factors for conversion of chemical constituents in milligrams or micrograms per liter to milliequivalents per liter

[Constituents followed by an asterisk(*) are reported in micrograms per liter; multiply by factor and divide results by 1,000]

Ion	Multiply by	Ion	Multiply by
Aluminum (Al^{+3})*	0.11119	Iodide (I^{-1})	0.00788
Ammonia as NH_4	.05544	Iron (Fe^{+3})*	.05372
Barium (Ba^{+2})	.01456	Lead (Pb^{+2})*	.00965
Bicarbonate (HCO_3^{-1})	.01639	Lithium (Li^{+1})*	.14411
Bromide (Br^{-1})	.01251	Magnesium (Mg^{+2})	.08226
Calcium (Ca^{+2})	.04990	Manganese (Mn^{+2})*	.03640
Carbonate (CO_3^{-1})	.03333	Nickel (Ni^{+2})*	.03406
Chloride (Cl^{-6})	.02821	Nitrate (NO_3^{-1})	.01613
Chromium (Cr^{+6})*	.11539	Nitrite (NO_2^{-1})	.02174
Cobalt (Co^{+2})*	.03394	Phosphate (PO_4^{-3})	.03159
Copper (Cu^{+2})*	.03148	Potassium (K^{+1})	.02557
Cyanide (CN^{-1})	.03844	Sodium (Na^{+1})	.04350
Fluoride (F^{-1})	.05264	Strontium (Sr^{+2})*	.02283
Hydrogen (H^{+1})	.99209	Sulfate (SO_4^{-2})	.02082
Hydroxide (OH^{-1})	.05880	Zinc (Zn^{+2})*	.03060

Table 2.--Factors for conversion of sediment concentration in milligrams per liter to parts per million[1]

[All values calculated to three significant figures]

Range of concentration in 1,000 mg/l	Divide by	Range of concentration in 1,000 mg/l	Divide by	Range of concentration in 1,000 mg/l	Divide by	Range of concentration in 1,000 mg/l	Divide by
0-8	1.00	201-217	1.13	411-424	1.26	619-634	1.39
8.05-24	1.01	218-232	1.14	427-440	1.27	636-650	1.40
24.2-40	1.02	234-248	1.15	443-457	1.28	652-666	1.41
40.5-56	1.03	250-264	1.16	460-473	1.29	668-682	1.42
56.5-72	1.04	266-280	1.17	476-489	1.30	684-698	1.43
72.5-88	1.05	282-297	1.18	492-506	1.31	700-715	1.44
88.5-104	1.06	299-313	1.19	508-522	1.32	717-730	1.45
105-120	1.07	315-329	1.20	524-538	1.33	732-747	1.46
121-136	1.08	331-345	1.21	540-554	1.34	749-762	1.47
137-152	1.09	347-361	1.22	556-570	1.35	765-780	1.48
153-169	1.10	363-378	1.23	572-585	1.36	782-796	1.49
170-185	1.11	380-393	1.24	587-602	1.37	798-810	1.50
186-200	1.12	395-409	1.25	604-617	1.38		

[1]Based on water density of 1.000 g/ml and a specific gravity of sediment of 2.65.

Organism count/unit volume (organisms/ml, organisms/l) refers to the number of organisms collected and enumerated in a sample and adjusted to the number per sample volume. Numbers of planktonic organisms are expressed in these terms.

Total organism count is the total number of organisms collected and enumerated in any particular sample.

Partial-record station is a particular site where limited streamflow data are collected systematically over a period of years for use in hydrologic analyses.

Particle size is the diameter, in millimeters (mm), of suspended sediment or bed material determined by either sieve or sedimentation methods. Sedimentation methods (pipet, bottom-withdrawal tube, visual-accumulation tube) determine fall diameter of particles in chemically dispersed distilled water.

Particle-size classification used in this report agrees with recommendations made by the American Geophysical Union Subcommittee on Sediment Terminology. The classification is as follows:

Classification	Size (mm)	Method of analysis
Clay.....	0.00024-0.004	Sedimentation
Silt.....	0.004-0.062	Sedimentation
Sand.....	0.062-2.0	Sedimentation or sieve
Gravel.....	2.0-64.0	Sieve.

The particle-size distributions given in this report are not necessarily representative of all particles in transport in the stream. Most of the organic material is removed and the sample is subjected to mechanical and chemical dispersion before analysis in distilled water.

Percent composition or percent of total is a unit for expressing the ratio of a particular portion of a sample or population to the total sample or population, in terms of types, numbers, weight, or volume.

Periphyton are the assemblage of microorganisms attached to and growing upon solid surfaces. While primarily consisting of algae, the periphyton also include bacteria, fungi, protozoa, rotifers, and other small organisms. Periphyton are useful indicators of water quality.

Plankton are the community of suspended, floating, or weakly swimming organisms that live in the open water of lakes and rivers.

Phytoplankton are the plant part of the plankton. They are usually microscopic and their movement is subject to water currents. Phytoplankton growth is dependent upon solar radiation and nutrient elements. Phytoplankton are expressed as the number of cells per unit volume of water or types and number of organisms per unit volume of water.

Blue-green algae are a group of phytoplankton organisms having a blue pigment, in addition to the green pigment called chlorophyll.

Diatoms are the unicellular or colonial algae having a siliceous shell.

Green algae have chlorophyll pigments similar in color to those of higher green plants. Some forms produce algal mats or floating "moss" in lakes.

Zooplankton are the animal part of the plankton. They are capable of extensive movements within the water column, and are often large enough to be seen with the unaided eye.

Primary productivity is a measure of the rate at which new organic matter is formed and accumulated through photosynthetic and chemosynthetic activity of producer organisms, chiefly green plants.

Milligrams of carbon per unit area or volume per unit time [$mg(C/m^2)$/time for periphyton and macrophytes and $mg(C/m^2)$/time or $mg(C/m^3)$/time for phytoplankton] are units for expressing primary productivity. They define the amount of carbon fixed in the organic matter of the phytoplankton as measured by radioactive carbon (carbon-14).

Milligrams of oxygen per unit area or volume per unit time [$mg(O/m^2)$/time for periphyton and macrophytes and $mg(O_2/m^2)$/time or $mg(O_2/m^3)$/time for phytoplankton] are units for expressing primary productivity. They estimate productivity and respiration rates as determined from changes in the measured dissolved oxygen concentration. Unit time may be expressed per hour or per day depending on the incubation period.

Sediment is solid material that originates mostly from disintegrated rocks and is transformed by, suspended in, or deposited from water; it includes chemical and biochemical precipitates and decomposed organic material such as humus. The quantity, characteristics, and cause of the occurrence of sediment in streams are influenced by environmental factors. Some major factors are degree of slope, length of slope, soil characteristics, land usage, and quantity and intensity of precipitation.

Bedload is the quantity of sediment transported in a stream by rolling, sliding, or skipping along the bed and very close to it; that is, within the bed layer.

Bed material is the sediment mixture of which the moving streambed is composed.

Suspended sediment is the sediment that at any given time is maintained in suspension by the upward components of turbulent currents or that exists in suspension as a colloid.

Suspended-sediment discharge is the rate at which dry weight of sediment passes a section of a stream or is the quantity of sediment, as measured by dry weight, or by volume, that is discharged in a given time. It is computed by multiplying discharge times milligrams per liter times 0.0027.

Total-sediment discharge or total-sediment load is the sum of suspended-sediment discharge and the bedload discharge. It is the total quantity of sediment, as measured by dry weight or volume, that is discharged during a given time.

Suspended-sediment concentration is the velocity-weighted concentration of suspended sediment in the sampled zone (from the water surface to a point approximately 0.3 ft (0.9 m) above the bed) expressed as milligrams of dry sediment per liter of water-sediment mixture (mg/l).

Mean concentration is the time-weighted concentration of suspended sediment passing a stream section during a 24-hour day.

Seston is the total suspended particulate matter in water. The concentration (weight) of seston is expressed in milligrams per liter.

Sodium-adsorption-ratio (SAR) is the expression of relative activity of sodium ions in exchange reactions with soil and is an index of sodium or alkali hazard to the soil. Waters range in respect to sodium hazard from those which can be used for irrigation on almost all soils to those which are generally unsatisfactory for irrigation.

Solute is any substance derived from the atmosphere, vegetation, soil, or rocks that is dissolved in water.

Specific conductance is a measure of the ability of a water to conduct an electrical current and is expressed in micromhos per centimeter at 25°C. Because the specific conductance is related to the number and specific chemical types of ions in solution, it can be used for approximating the dissolved-solids content in the water. Commonly, dissolved solids (in milligrams per liter) is about 65 percent of the specific conductance (in micromhos per centimeter at 25°C). This relation is not constant from stream to stream or from well to well, and it may even vary in the same source with changes in the composition of the water.

Stage-discharge relation is the relation between gage height and the volume of water per unit of time, flowing in a channel.

Substrate is the physical surface upon which an organism lives.

Natural substrate refers to any naturally occurring emersed or submersed solid surface, such as a rock or tree, upon which an organism lives.

Artificial substrate is a device which is placed in a stream or lake for colonization of organisms.

Taxonomy is the division of biology concerned with the classification and naming of organisms. The classification of organisms is based upon a hierarchial scheme beginning with Kingdom and ending with *Species*. The higher the classification level, the fewer features the organisms have in common.

Thermograph is a thermometer that continuously and automatically records, on a chart, the water temperature of a stream. "Temperature recorder" is the term used to indicate the presence of a thermograph or a digital mechanism that records water temperature in digital format on punched paper tape.

Time-weighted average is computed by multiplying the number of days in the sampling period by the concentrations of individual constituents for the corresponding period and dividing the sum of the products by the total number of days. A time-weighted average represents the composition of water that would be contained in a vessel or reservoir that had received equal quantities of water from the stream each day for the water year.

Tons per acre-foot indicates the dry weight of dissolved solids in 1 acre-foot of water. It is computed by multiplying the concentration in milligrams per liter by 0.00136.

Tons per day is the quantity of a substance in solution or suspension that passes a stream section during a 24-hour day.

Total (as used in tables of chemical analyses) refers to the amount of a substance that is present both in solution and in suspension. Analyses are performed on representative samples of water-suspended sediment mixtures.

Turbidity of a sample is the reduction of transparency due to the presence of particulate matter. In this report it is expressed in Jackson turbidity units (JTU).

Weighted average is used in this report to indicate discharge-weighted average. It is computed by multiplying the discharge for a sampling period by the concentrations of individual constituents for the corresponding period and dividing the sum of the products by the sum of the discharges. A discharge-weighted average approximates the composition of water that would be found in a reservoir containing all the water passing a given location during the water year after thorough mixing in the reservoir.

Weight-percent-organic-matter is the approximate percentage of organic matter, by weight, in the sample. Values were determined by a method modified from one described by Anderson (1963).

WRD is used as an abbreviation for "Water-Resources Data" in the summary REVISIONS paragraph to refer to previously published State annual basic-data reports.

WSP is used as an abbreviation for "Water-Supply Paper" in references to previously published reports.

SPECIAL NETWORKS AND PROGRAMS

Some of the stations for which data are published in this report are included in special networks and programs. These stations are identified by their title, set in parentheses, under the station name.

Hydrologic bench-mark station is one that provides hydrologic data for a basin in which the hydrologic regimen will likely be governed solely by natural conditions. Data collected at a bench-mark station may be used to separate effects of natural from manmade changes in other basins which have been developed and in which the physiography, climate, and geology are similar to those in the undeveloped bench-mark basin.

Irrigation network stations are water-quality stations located at or near certain streamflow gaging stations west of the main stem of the Mississippi River. Data collected at these stations are used to evaluate the chemical quality of surface waters used for irrigation and the changes resulting from the drainage or irrigated lands. Prior to water year 1966, the data for these stations were published in the annual water-supply paper series, "Quality of Surface Water for Irrigation, Western States."

National stream-quality accounting network is an accounting network designed by the U.S. Geological Survey to meet many of the information demands of agencies or groups involved in national or regional water-quality planning and management. Both accounting and broad-scale monitoring objectives have been incorporated in the network design. Areal configuration of the network is based on the river-basin accounting units designated by the Office of Water Data Coordination in consultation with the Water Resources Council. Primary objectives of the network are (1) to depict areal variability of water-quality conditions nationwide on a year-by-year basis and (2) to detect and assess long-term changes in stream quality.

Pesticide program is a network of regularly sampled water-quality stations where additional monthly samples are collected to determine the concentration and distribution of pesticides in streams whose waters are used for irrigation or in streams in areas where potential contamination could result from the application of the commonly used insecticides and herbicides.

Pesticides are chemical compounds used to control the growth of undesirable plants and animals. Major catagories of pesticides include insecticides, miticides, fungicides, herbicides, and rodenticides. Since the first application of DDT as an insecticide in the early 1930's, there have been almost 60,000 pesticide formulations registered, each containing at least one of the approximately 800 different basic pesticide compounds. The United States annually produces about 1 billion pounds of these compounds. Although efforts are being made to substitute many of the chlorinated hydrocarbon pesticides with more specific, fast-acting and easily degradable compounds, chlorinated hydrocarbon pesticides are still commonly used in many areas of the country.

Radiochemical program is a network of regularly sampled water-quality stations where additional samples are collected twice a year (at high and low flow) to be analyzed for radiosotopes. The streams that are sampled represent major drainage basins in the conterminous United States.

Radioisotopes are isotope forms of an element that exhibit radioactivity. Isotopes are varieties of a chemical element that differ in atomic weight, but are very nearly alike in chemical properties. The difference arises because the atoms of the isotopic forms of an element differ in the number of neutrons in the nucleus. For example: Ordinary chlorine is a mixture of isotopes having atomic weights 35 and 37, with the natural mixture having atomic weight about 35.453. Many of the elements similarly exist as mixtures of isotopes, and a great many new isotopes have been produced in the operation of nuclear devices such as the cyclotron (Rose, 1966, p. 257). There are 275 isotopes of the 81 stable elements in addition to over 800 radioactive isotopes.

Radioisotopes that are determined in this program are natural uranium in micrograms per liter (ug/l), radium as radium-226 in picocuries per liter (PC/L, pCi/l), gross beta radiation as equivalent strontium/yttrium-90 or cesium-137 in picocuries per liter (PC/L) and gross alpha radiation as micrograms of uranium equivalent per liter (ug/l). Gross alpha and beta radioactivity associated with the fine-grained (silt and clay sized) sediments in the samples are also determined.

A picocurie (PC, pCi) is one trillionth (1×10^{-12}) of the amount of radioactivity represented by a curie (Ci). A curie is the amount of radioactivity that yields 3.7×10^{10} radioactive disintegrations per second. A picocurie yields 2.22 dpm (disintegrations per minute).

Tritium network is a network of tritium-sampling stations which has been established to provide baseline information on the occurrence of tritium in the Nation's surface waters. In addition to the surface-water stations in the network, tritium data are also obtained at a number of precipitation stations. The purpose of the precipitation stations is to provide an estimate sufficient for hydrologic studies of the tritium input to the United States. Included in this network in Arizona is station 09429490, Colorado River above Imperial Dam, Ariz.-Calif.

Tritium concentrations are reported in terms of tritium units (TU); one TU is equal to 3.2436 picocuries per liter.

DOWNSTREAM ORDER AND STATION NUMBER

Stations are listed in downstream direction along the main stream, and stations on tributaries are listed between stations on the main stream in the order in which those tributaries enter the main stream. Stations on tributaries entering above all mainstream stations are listed before the first mainstream station. Stations on tributaries to tributaries are listed in a similar manner. In the list of surface-water and water-quality stations in the front of this report the rank of tributaries is indicated by indention, each indention representing one rank.

As an added means of identification, each surface-water station, water-quality station, and partial-record station has been assigned a station number. These are in the same downstream order used in this report. In assigning station numbers, no distinction is made between partial-record and continuous-record stations; therefore, the station number for a partial-record station indicates downstream order position in a list made up of both types of stations. Water-quality stations located at or near gaging stations or partial-record stations have the same number as the gaging or partial-record station. Gaps are left between the numbers to allow for new stations that may be established; hence the numbers are not consecutive. The complete 8-digit number for each station, such as 11264500 which appears just to left of the station name includes the 2-digit number "11" plus the 6-digit downstream order number "264500." In this report, the records are listed in downstream order by parts. The part number refers to an area whose boundaries coincide with certain natural drainage lines. Records for California are in Part 9 (Colorado River Basin), Part 10 (The Great Basin), and Part 11 (Pacific slope basins in California). All records for a drainage basin encompassing more than one State could be arranged in downstream order by assembling pages from the various State reports by station number to include all records in the basin.

Downstream order station numbers are not assigned to sites where only random water-quality samples are taken. These sites are classified as water-quality miscellaneous sites, and as a means of location and identification a 15-digit number consisting of the latitude and longitude coordinates to the nearest second for each site plus a 2-digit sequential number are assigned. For example, the station number for a water-quality miscellaneous site with a lat 33°29'27", long 117°39'42" would be 332927117394201.

NUMBERING SYSTEM FOR WELLS AND MISCELLANEOUS SITES

The well-numbering system of the U.S. Geological Survey is based on the grid system of latitude and longitude. The number consists of 15 digits. The first 6 digits denote the degrees, minutes, and seconds of latitude, the next 7 digits denote degrees, minutes, and seconds of longitude, and the last 2 digits is a sequential number for wells within a 1-second grid. The system provides the geographic location of the well and a unique number for each well. In the event that the latitude-longitude coordinates are the same for two or more wells or for a surface-water miscellaneous sampling site and a well site, the sequential numbers "01", "02", etc. are used for differentiation within the same sequence. See figure 1.

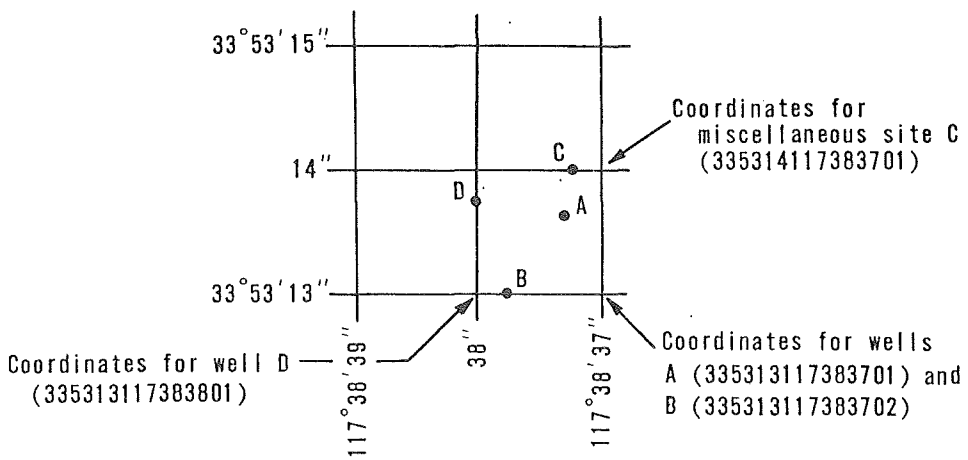

Figure 1.--System for numbering wells and miscellaneous sites (latitude and longitude).

Local well numbers

Wells and springs in California are assigned numbers according to their location on the rectangular system for the subdivision of public land. For example, in the number 11S/17E-22A1 M, assigned to a well about a mile west of Madera, the part of the number preceding the slash indicates the township (T.11 S.) and the number between the slash and hyphen indicates the range (R.17 E.); the digits following the hyphen indicate the section (sec.22); the letter following the section number indicates the 40-acre subdivision of the section, as shown in figure 2. Within each 40-acre tract, the wells are numbered serially, as indicated by the final digit. The final letter, separated from the rest of the number by a space, indicates the base line and meridian. Base-line and meridian designations are as follows: H, Humboldt; M, Mount Diablo; S, San Bernardino.

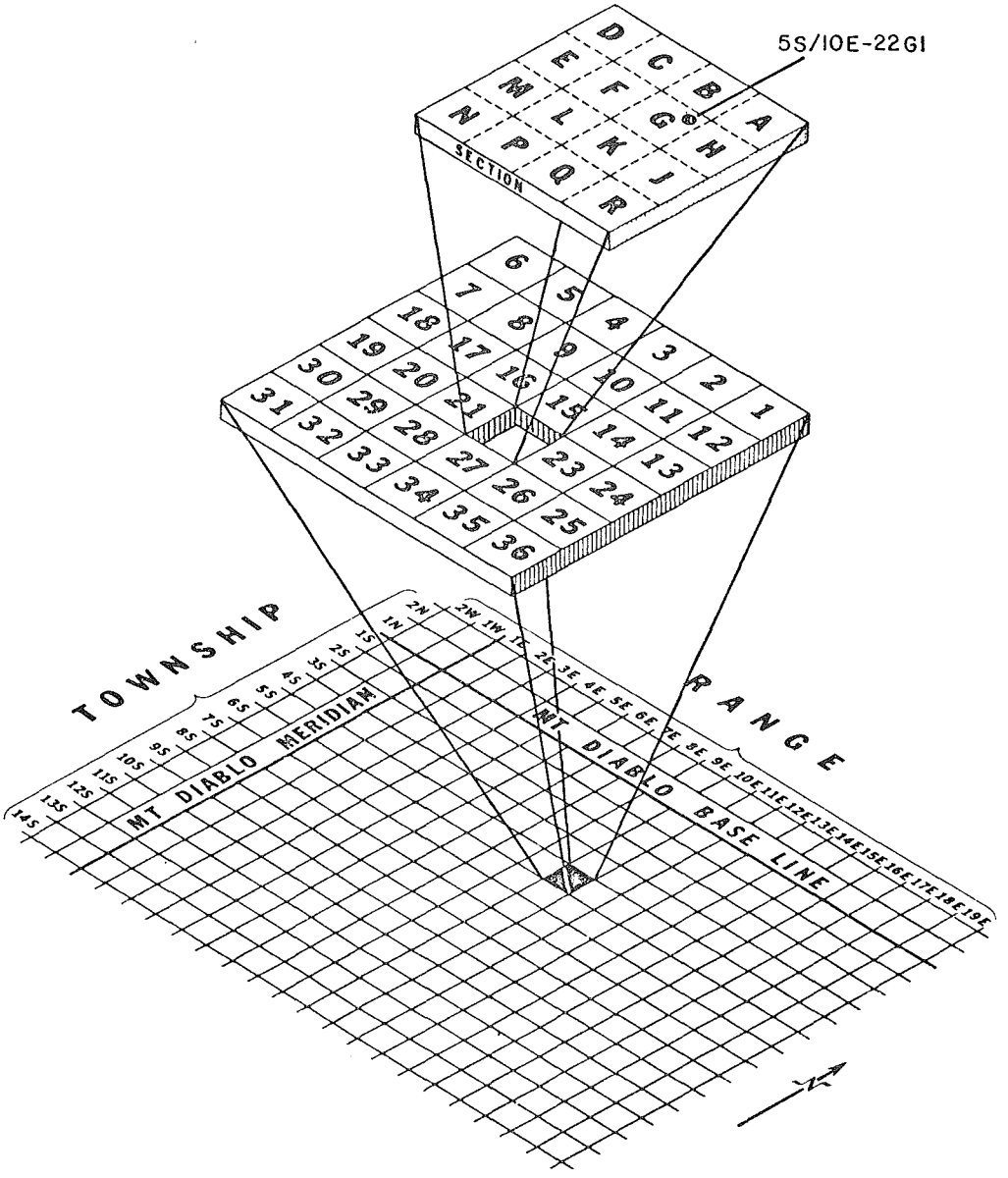

Figure 2.--Local well-numbering system.

EXPLANATION OF SURFACE-WATER RECORDS

Collection and computation of data

The base data collected at gaging stations consist of records of stage and measurements of discharge of streams or canals, and stage, surface area, and contents of lakes or reservoirs. In addition, observations of factors affecting the stage-discharge relation or the stage-capacity relation, weather records, and other information are used to supplement base data in determining the daily flow or volume of water in storage. Records of stage are obtained from direct readings on a nonrecording gage or from a water-stage recorder that gives a continuous graph of the fluctuations or a tape punched at 15-, 30-, or 60-minute intervals. Measurements of discharge are made with a current meter, using the general methods adopted by the Geological Survey on the basis of experience in stream gaging since 1888. These methods are described in standard textbooks, in Water-Supply Paper 888, and in the U.S. Geological Survey Techniques of Water Resources Investigations, book 3, chapter A6. Surface areas of lakes or reservoirs are determined from instrument surveys using standard methods. The configuration of the reservoir bottom is determined by sounding at many points.

For a stream-gaging station rating tables giving the discharge for any stage are prepared from stage-discharge relation curves defined by discharge measurements. If extensions to the rating curves are necessary to define the extremes of discharge, they are made on the basis of indirect measurements of peak discharge (such as slope-area or contracted-opening measurements, computation of flow over dams or weirs), velocity-area studies and logarithmic plotting. The daily mean discharge is computed from gage heights and rating tables, then the monthly and yearly mean discharges are computed from the daily figures. If the stage-discharge relation is subject to change because of frequent or continual change in the physical features that form the control, the daily mean discharge is determined by the shifting-control method, in which correction factors based on individual discharge measurements and notes by engineers and observers are used in applying the gage heights to the rating tables. If the stage-discharge relation for a station is temporarily changed by the presence of aquatic growth or debris on the control, the daily mean discharge is computed by what is basically the shifting-control method.

At some stream-gaging stations the stage-discharge relation is affected by backwater from reservoirs, tributary streams, or other sources. This necessitates the use of the slope method in which the slope or fall in a reach of the stream is a factor in determining discharge. The slope or fall is obtained by means of an auxiliary gage set at some distance from the base gage. At some stations the stage-discharge relation is affected by changing stage; at these stations the rate of change in stage is used as a factor in computing discharge.

At some stream-gaging stations the stage-discharge relation is affected by ice in the winter, and it becomes impossible to compute the discharge in the usual manner. Discharge for periods of ice effect is computed on the basis of the gage-height record and occasional winter discharge measurements, consideration being given to the available information on temperature and precipitation, notes by gage observers and hydrologists, and comparable records of discharge for other stations in the same or nearby basins.

For a lake or reservoir station, capacity tables giving the contents for any stage are prepared from stage-area relation curves defined by surveys. The application of the stage to the capacity table gives the contents from which the daily, monthly, or yearly change in contents is computed.

If the stage-capacity curve is subject to changes because of deposition of sediment in the reservoir, periodic resurveys of the reservoir are necessary to define new stage-capacity curves. During the period between reservoir surveys the computed contents may be increasingly in error due to the gradual accumulation of sediment.

For some gaging stations there are periods when no gage-height record is obtained or the recorded gage height is so faulty that it cannot be used to compute daily discharge or contents. This happens when the recorder stops or otherwise fails to operate properly, intakes are plugged, the float is frozen in the well, or for various other reasons. For such periods the daily discharges are estimated on the basis of recorded range in stage, adjoining good record, discharge measurements, weather records, and comparison with other station records from the same or nearby basins. Likewise, daily contents may be estimated on the basis of operator's log, adjoining good record, inflow-outflow studies, and other information.

The data in this report generally comprise a description of the station and tabulations of basic data. For gaging stations on streams or canals a table showing the daily discharge and monthly and yearly discharge is given. For gaging stations on lakes and reservoirs a monthly summary table of stage and contents or a table showing the daily contents is given. Tables of daily mean gage heights are included for some streamflow stations and for some reservoir stations. Records are published for the water year, which begins on October 1 and ends on September 30. A calendar for the current year is shown on the reverse side of the front cover to facilitate finding the day of the week for any date.

The description of the gaging station gives the location, drainage area, period of record, type and history of gages, average discharge, extremes of discharge or contents, general remarks, and notations of revisions of previously published records. The location of the gaging station and the drainage area are obtained from the most accurate maps available. River mileage, given under "LOCATIONS" for some stations, is that determined and used by the Corps of Engineers or other agencies. Periods for which there are published records for the present station or for stations generally equivalent to the present one are given under "PERIOD OF RECORD." The type of gage currently in use, the datum of the present gage above mean sea level, and a condensed history of the types, locations, and datums of previous gages used during the period of record are given under "GAGE." In references to datum of gage, the phrase "mean sea level" denotes "Sea Level Datum of 1929" as used by the Topographic Division of the Geological Survey, unless otherwise qualified. The average discharge for the number of years indicated is given under "AVERAGE DISCHARGE", it is not given for stations having fewer than 5 complete years of record or for stations where changes in water development during the period of record cause the figure to have little significance. The maximum discharge (or contents) and the maximum gage height, the minimum discharge if there is little or no regulation (or the minimum contents), and the minimum gage height if it is significant are given under "EXTREMES." The minimum daily discharge is given if there is extensive regulation (also the minimum discharge and gage height if they are abnormally low). In the first paragraph headed "Current year:" the data given are for the complete current water year unless otherwise specified. In the second paragraph under "EXTREMES" headed "Period of record:" the data given are for the period of record given in the PERIOD OF RECORD paragraph. Reliable information concerning major floods that occurred outside the period of record is given in the third or last paragraph under "EXTREMES." Unless otherwise qualified, the maximum discharge (or contents) corresponds to the crest stage obtained by use of a water-stage recorder (graphic or digital), a crest-stage gage, or a nonrecording gage read at the time of the crest. If the maximum gage height did not occur at the same time as the maximum discharge or maximum contents, it is given separately. Information pertaining to the accuracy of the discharge records, and to conditions that affect the natural flow at the gaging station, is given under "REMARKS"; for reservoir stations information on the dam forming the reservoir, the capacity, outlet works and spillway, and purpose and use of the reservoir, is also given under "REMARKS."

Previously published records of some stations have been found to be in error on the basis of data or information later obtained. Revisions of such records are usually published along with the current records in one of the annual or compilation reports. In order to make it easier to find such revised records, a paragraph headed "REVISIONS (WATER YEARS)" has been added to the

description of all stations for which revised records have been published. Listed therein are all the reports in which revisions have been published, each followed by the water years for which figures are revised in that report. In listing the water years only one number is given; for instance, 1933 stands for the water year October 1, 1932, to September 30, 1933. If no daily, monthly, or annual figures of discharge were revised, that fact is brought out by notations after the year dates as follows: "(M)" means that only the instantaneous maximum discharge was revised; "(m)" that only the instantaneous minimum was revised; and "(P)" that only peak discharges were revised. If the drainage area has been revised, the report in which the revised figure was first published is given.

Skeleton capacity tables are published for all reservoirs for which records of contents are published on a daily basis.

The daily table for stream-gaging stations gives the mean discharge for each day and is followed by monthly and yearly summaries. In the monthly summary below the daily table, the line headed "TOTAL" gives the sum of the daily figures. The line headed "MEAN" gives the average flow in cubic feet per second during the month. The lines headed "MAX" and "MIN" give the maximum and minimum daily discharges, respectively, for the month. Discharge for the month also may be expressed in acre-feet (line headed "AC-FT").

In the yearly summary below the monthly summary, the figures following "MAX" are the maximum daily discharges for the calendar and water years; likewise, those following "MIN" are the minimum daily discharges.

Footnotes to the table of daily discharges are introduced by the word "NOTE." Footnotes are used to indicate periods for which the discharge is computed or estimated by special methods because of no gage-height record, backwater from various sources, or other unusual conditions. Periods of no gage-height record are indicated if the period is continuous for a month or more or includes the maximum discharge for the year. Periods of backwater from an unusual source, of indefinite stage-discharge relation, or of any other unusual condition at the gage site are indicated only if they are a month or more in length and the accuracy of the records is affected. Days on which the stage-discharge relation is affected by ice are not indicated. The methods used in computing discharge for various unusual conditions have been explained in preceding paragraphs.

Peak discharges and their times of occurrence and corresponding gage heights for many stations are listed below the yearly summary. All independent peaks above the selected base are given. The base discharge, which is given in parentheses, is selected so that an average of about three peaks a year can be presented. Peak discharges are not published for any canals, ditches, drains, or for any stream for which the peaks are subjected to substantial control by man. Time of day is expressed in 24-hour local standard time; for example, 12:30 a.m. is 0030, 1:30 p.m. is 1330.

For most gaging stations on lakes and reservoirs the data presented comprise a description of the station and a monthly summary table of stage and contents. For some reservoirs a table showing daily contents or stage is given. A skeleton table of capacity at given stages is published for all reservoirs for which records are published on a daily basis, but is not published for reservoirs for which only monthly data are given.

Data collected at partial-record stations and miscellaneous sites are given in three tables at the end of the daily records in this report. The first is a table of discharge measurements at low-flow partial-record stations, the second is a table of annual maximum stage and discharge at crest-stage stations, and the third is a table of discharge measurements at miscellaneous sites.

Accuracy of data

The accuracy of discharge data depends primarily on (1) the stability of the stage-discharge relation or, if the control is unstable, the frequency of discharge measurements, and (2) the accuracy of observations of stage, measurements of discharge, and interpretation of records.

The station description under "REMARKS" states the degree of accuracy of the records. "Excellent" means that about 95 percent of the daily discharges is within 5 percent; "good" within 10 percent; and "fair" within 15 percent. "Poor" means that daily discharges have less than "fair" accuracy.

Figures of daily mean discharge in this report are shown to the nearest hundredth of a cubic foot per second for discharges of less than 1 ft^3/s; to tenths between 1.0 and 10 ft^3/s; to whole numbers between 10 and 1,000 ft^3/s; and to 3 significant figures above 1,000 ft^3/s. The number of significant figures used is based solely on the magnitude of the figure. The same rounding rules apply to discharge figures listed for partial-record stations and miscellaneous sites.

Discharge at many stations, as indicated by the monthly mean, may not reflect natural runoff due to the effects of diversion, consumptive use, regulation, evaporation, or other factors. Evaporation from a reservoir is not included in the adjustments for changes in reservoir contents, unless it is so stated. Even at those stations where adjustments are made, large errors in computed runoff may occur if adjustments or unadjusted losses (consumptive use, evaporation, seepage, etc.) are large in comparison with the observed discharge.

Publications

In each water-supply paper entitled, "Surface Water Supply of the United States" there is a list of numbers of preceding water-supply papers containing streamflow information for the area covered by that report. In addition, there is a list of numbers of water-supply papers containing detailed information on major floods in the area. Records for stations in California for the period October 1960 to September 1965, are in Water-Supply Papers 1926, 1927, 1928, 1929, 1930, and 1931; and for the period October 1965 to September 1970, are in Water-Supply Papers 2126, 2127, 2128, 2129, 2130, and 2131.

Two series of summary reports entitled, "Compilation of Records of Surface Waters of the United States" have been published; the first series covers the entire period of record through September 1950, and the second series covers the period October 1950 to September 1960. These reports contain summaries of monthly and annual discharge and monthend storage for all previously published records, as well as some records not contained in the annual series of water-supply papers. All records were reexamined and revised where warranted. Estimates of discharge were made to fill short gaps whenever practical. The yearly summary table for each gaging station lists the numbers of the water-supply papers in which daily records were published for that station. Records for stations in California are compiled in Water-Supply Papers 1313, 1314, 1315-A, and 1315-B through September 1950, and in 1733, 1734, and 1735 for October 1950 to September 1960.

Special reports on major floods or droughts or of other hydrologic studies for the area have been issued in publications other than water-supply papers. Information relative to these reports may be obtained from the district office.

Other data available

Occasionally, discharge measurements are made within a short time period to investigate the seepage gains or losses along a reach of a stream or to determine the low-flow characteristics of an area. Such measurements are also at the end of this report.

More detailed information than that published for most of the gaging stations, such as discharge measurements, gage-height records, and rating tables, is on file in the district office. Many gaging-station records in California through 1968 have been analyzed to give several statistical summaries: (1) the number of days in each year that the daily discharge was between selected limits (duration tables); (2) the lowest mean discharge for selected numbers of consecutive days in each year; and (3) the highest mean discharge for selected numbers of consecutive days in each year.

At or near some gaging stations, water-quality records also are collected. Data are obtained on the chemical quality of the stream water, on water temperature, on suspended-sediment concentration, and on the particle-size distribution of suspended sediment and bed material. These data are given immediately following the gaging station record, or if mentioned in the "REMARKS" paragraph, in the water-quality partial-record section of this report.

Records of discharge collected by agencies other than the Geological Survey

Records of discharge not published by the Geological Survey have been collected at numerous sites by many other Federal, State, County, City, and local agencies, and by private organizations. A listing of stream-gaging stations and the agencies operating them is published in California Department of Water Resources Bulletin 157, "Index of Stream-Gaging Stations in and Adjacent to California." The Office of Water Data Coordination, Water Resources Division, U.S. Geological Survey, Reston, Virginia, 22092, maintains an index of such sites. Information on records at specific sites can be obtained upon request.

EXPLANATION OF WATER-QUALITY RECORDS

Collection and examination of data

Water samples for analyses usually are collected at or near gaging stations. The discharge records at these stations are used in conjunction with the computations of the chemical constituents and the sediment loads.

Ground-water well samples included in this report are only a few of the total water-quality samples taken, and are for special baseline monitoring programs.

The data in this report include a description of the sampling station and tabulations of the samples analyzed. The description of the sampling station gives the periods of record for the various water-quality data, extremes of the pertinent data, and general remarks, in a format similar to that used for streamflow gaging stations. Location descriptions and the drainage area are given for stations where no stream-gaging records are published. For ground-water sampling stations, no descriptive statements are given. However, the well number, depth of well, date of sampling, and other pertinent data are given in the table containing the chemical analyses of ground water.

Water-quality information is presented for chemical quality, biological, microbiological, water temperature, and fluvial sediment. Chemical quality includes concentrations of individual dissolved constituents and certain

properties or characteristics such as hardness, sodium-adsorption-ratio, specific conductance, and pH. The biological information includes qualitative and quantitative analyses of plankton, bottom organisms, and particulate inorganic and amorphous matter present. Microbiological information includes quantitative identification of certain bacteriological indicator organisms. Water-temperature data represent once-daily observations except for stations where a continuous temperature recorder (thermograph) furnishes information from which daily minimums and maximums are obtained. Fluvial-sediment information is given for suspended-sediment discharges and concentrations and for particle-size distribution of suspended sediment and bed material.

Prior to the 1968 water year, data for chemical constituents and concentrations of suspended sediment were reported in parts per million (ppm) and water temperatures were reported in degrees Fahrenheit (°F). In October 1967, the U.S. Geological Survey began reporting data for chemical constituents and concentrations of suspended sediment in milligrams per liter (mg/l) and water temperatures in degrees Celsius (centigrade, °C). In waters with a density of 1.000 g/ml (grams per milliliter), parts per million and milligrams per liter can be considered equal. In waters with a density greater than 1.000 g/ml, values in parts per million should be multiplied by the density to convert to milligrams per liter. Temperature reported in degrees Celsius may be converted to degrees Fahrenheit by using table 3.

In October 1968, the Geological Survey began reporting many of the chemical constituents as well as the minor elements in micrograms per liter instead of milligrams per liter. (See "Definition of Terms," p. 3.).

Table 3.--Degrees Celsius (°C) to degrees Fahrenheit (°F)

[Temperature reported to nearest 0.5°C]

°C	°F	°C	°F	°C	°F	°C	°F	°C	°F
0.0	32	10.0	50	20.0	68	30.0	86	40.0	104
.5	33	10.5	51	20.5	69	30.5	87	40.5	105
1.0	34	11.0	52	21.0	70	31.0	88	41.0	106
1.5	35	11.5	53	21.5	71	31.5	89	41.5	107
2.0	36	12.0	54	22.0	72	32.0	90	42.0	108
2.5	36	12.5	54	22.5	72	32.5	90	42.5	108
3.0	37	13.0	55	23.0	73	33.0	91	43.0	109
3.5	38	13.5	56	23.5	74	33.5	92	43.5	110
4.0	39	14.0	57	24.0	75	34.0	93	44.0	111
4.5	40	14.5	58	24.5	76	34.5	94	44.5	112
5.0	41	15.0	59	25.0	77	35.0	95	45.0	113
5.5	42	15.5	60	25.5	78	35.5	96	45.5	114
6.0	43	16.0	61	26.0	79	36.0	97	46.0	115
6.5	44	16.5	62	26.5	80	36.5	98	46.5	116
7.0	45	17.0	63	27.0	81	37.0	99	47.0	117
7.5	45	17.5	63	27.5	81	37.5	99	47.5	117
8.0	46	18.0	64	28.0	82	38.0	100	48.0	118
8.5	47	18.5	65	28.5	83	38.5	101	48.5	119
9.0	48	19.0	66	29.0	84	39.0	102	49.0	120
9.5	49	19.5	67	29.5	85	39.5	103	49.5	121

Biological and microbiological variables

Water samples for bacteria analyses are collected in sterile water-sampling bottles (Van Dorn or Kemmerer-type) or sterile milk dilution bottles. There are individual methods of analyses for the various types of bacteria. Basically, each sample is filtered, preferably within 1 hour but not more than 6 hours after collection, through sterile membrane filters using dilutions determined by the estimated bacterial quality of the water. Fecal streptococcal bacteria are present in fewer numbers than coliform bacteria, so the filtered volume of sample must be larger than that used for other bacterial determinations.

In the determination of total coliform bacteria, the samples are incubated in an enriched nutrient medium at 35°C ±1.0°C for 18-24 hours. For fecal coliform bacteria, the samples are incubated at 44.5°C ±0.2°C for 22 hours ±2 hours. For fecal streptococcal bacteria, the samples are incubated at 35°C ±1.0°C for 48 hours ±2 hours.

After incubation, the number of colonies of each type of bacteria are counted under a lighted dissecting-type microscope. The counts are reported as colonies per 100 milliliters of sample. A complete description of the methods for analysis of each type of bacteria is given in Slack and others (1973).

Benthic organisms are collected with a variety of devices. Usually a clamshell-type grab, which closes upon contact with the bottom substrate, is used in deep water. In soft mud or detritus, a spring-loaded messenger-tripped Ekman grab can be used. In hard substrates a weighted grab may be required. In shallower water and riffle areas of streams, a Surber sampler is a useful sampling device. Artificial substrates may also be used for collection. After collection the benthic organisms are removed from the sample and placed in collection bottles and preserved with ethyl or isopropyl alcohol, or a similar preservative.

In the laboratory, the organisms are identified with the use of a stereoscopic microscope, and the number of individuals of each taxa are enumerated. The number of benthic organisms per area sampled and the percentage composition of each taxon in the sample may be calculated. The diversity of the benthic organism community may also be calculated. Biomass measurements, in grams per square meter can be used to express the quantity of the organic material in a sample of benthic organisms.

Fish are collected with a seine, gill net, electrofishing gear, or by hand. Length-weight relations can be used to compare fish growth from several streams, and comparisons in species composition with time may reveal water-quality trends.

Macrophytes are collected with hooks, rakes, dredges, or by hand. The entire plant is collected, preserved, and analyzed for types and distribution. The density of macrophytes per unit area is expressed in square meters, or as the percentage of water surface covered.

Periphyton are collected with artificial substrates made of plastic or fiberboard materials, or from natural substrates. Artificial substrates are placed in the water, and after a sufficient time for colonization (usually 4 to 6 weeks), the substrates are removed from the water. The periphyton are scraped from a measured area of each substrate and preserved in a dilute formaldehyde solution or Logol's solution for identification. Samples for biomass measurements should be air dried or frozen.

In the laboratory, the samples are examined for types and numbers using a Sedgwick-Rafter counting cell or an inverted microscope. Periphyton concentrations are reported as the number of cells or organisms per area of scraped surface. Biomass determinations of periphyton, expressed as grams per square meter, include measurements of dry weight, ash weight, and the calculation of organic weight.

Phytoplankton are collected with a water-sampling bottle (Van Dorn or Kemmerer-type), depth-integrated sampler, or net. In most studies concerned with phytoplankton types and abundance, the samples are collected at various depths in the euphotic (lighted) zone with a water bottle.

After collection, the samples are preserved in a dilute formaldehyde solution, along with a detergent, or Logol's solution, or if analysis will begin within 2 or 3 hours, the samples may be chilled at 3-4°C. In the laboratory the samples are examined for types and numbers, using either the Sedgwick-Rafter, inverted microscope, or membrane filter methods. Phytoplankton concentrations are reported as the number of cells or organisms per unit volume. Phytoplankton biomass can be estimated by spectrographically measuring the amount of cellular chlorophyll extract. Primary production measurements can also be made on phytoplankton samples using the carbon-14 method or the oxygen light- and dark-bottle method.

Seston can be collected at any depth using a water-sampling bottle, or at depths representative of the entire flow of a stream using a depth-integrating sampler. The sample volume should be adjusted to the amount of suspended material present.

After collection, water samples for seston should be chilled or preserved if filtration is not begun immediately. The sample is filtered through a tared glass-fiber filter to remove the particulate matter. The increase in weight of the filter after drying at 75°C is the measure of the dry weight of particulate matter in the sample. The residue then may be ashed at 500°C, and the organic weight of particulate matter in the sample determined as the difference between the dry weight and ash weight. All biomass determinations of seston are expressed in milligrams per liter.

Zooplankton vary widely in size and are mobile, thus they require a variety of sampling techniques. Many zooplankton, such as the copepods and cladecerons, migrate vertically, approaching the surface at night and moving to lower depths at dawn. Vertical movement, and the ability of zooplankton to avoid sampling devices, must be considered in their collection.

Zooplankton are collected with a water-sampling bottle (Van Dorn or Kemmerer-type), sampling tube, water pump, plankton trap, Clarke-Bumpus plankton sampler, or plankton net. The type of sampler to be used depends upon the abundance of zooplankton present and the objectives of the study. There is no single method that can qualitatively and quantitatively sample an entire zooplankton community.

The water sample and contained zooplankton are transferred to sample containers. Samples for species identification and cell counts are preserved in a dilute formaldehyde solution, and those for biomass determinations are preserved by freezing with dry ice.

In the laboratory, the zooplankton are identified and the total number of cells or organisms enumerated using the counting chamber or the Sedgwick-Rafter method. Zooplankton concentrations are reported as the number of cells or organisms per unit volume of water sampled. Zooplankton biomass is reported as the dry weight, ash weight, and weight of organic matter per unit volume of water sample, usually expressed in grams per cubic meter.

Solutes

Most methods for collecting and analyzing water samples to determine the kinds and concentrations of solutes are described by Brown, Skougstad, and Fishman (1970). The method for determining elemental constituents by emission spectrographic techniques is described by Barnett and Mallory (1971). Analysis of pesticides, herbicides, and organic substances in water are described by Goerlitz and Lamar (1967), and Goerlitz and Brown (1972). The collection and analysis of aquatic, biological, and microbiological samples are described by Slack and others (1973).

Chemical-quality data published in this report are considered to be the most representative values available for the stations listed. The values reported represent water-quality conditions at the time of sampling as much as possible, consistent with available sampling techniques and methods of analysis. In the rare case where an apparent inconsistency exists between the reported pH value and the relative abundance of carbon dioxide species (carbonate and bicarbonate), the inconsistency is the result of a slight uptake of carbon dioxide from the air by the sample between measurement of pH in the field and determination of carbonate and bicarbonate in the laboratory.

For chemical-quality stations equipped with noncontinuous-digital monitors, the records consist of daily maximum, minimum, and mean values for each constituent measured and are based upon hourly punches beginning at 0100 hours and ending at 2400 hours for the day of record. More detailed records (hourly values) may be obtained from the U.S. Geological Survey district office at the address given on page IV.

Ground-water quality normally does not change significantly during short periods of time; infrequent sampling and analysis of ground water adequately defines ground-water quality at a given site.

Temperature

Water temperatures are measured at most of the water-quality stations. In addition, water temperatures are taken at time of discharge measurements for surface-water stations. For daily stations, the water temperatures are taken at about the same time each day when sample is collected. Large streams have a small diurnal temperature change; shallow streams may have a daily range of several degrees and may follow closely the changes in air temperature. Some streams may be affected by waste-heat discharges.

At stations where continuously recording thermographs are present, the records consist of maximum and minimum temperatures for each day and month.

Sediment

Suspended-sediment concentrations are determined from samples collected by using depth-integrating samplers. Samples usually are obtained at several verticals in the cross section, or a single sample may be obtained at a fixed point and a coefficient applied to determine the mean concentration at the cross sections.

During periods of rapidly changing flow or rapidly changing concentration, samples may have been collected more frequently (twice daily or, in some instances, hourly). The published sediment discharges for days of rapidly changing flow or concentration were computed by the subdivided day method (time-discharge weighted average). Therefore, for those days when the published sediment discharge value differs from the value computed as the product of discharge times mean concentration times 0.0027, the reader can assume that the sediment discharge for that day was computed by the subdivided day method. For periods when no samples were collected, daily loads of suspended sediment were estimated on the basis of water discharge, sediment concentrations observed immediately before and after the periods, and suspended-sediment loads for other periods of similar discharge.

At other stations, suspended-sediment samples were collected periodically at many verticals in the stream cross section. Although data collected periodically may represent conditions only at the time of observations, such data are useful in establishing seasonal relations between quality and streamflow in predicting long-term sediment-discharge characteristics of the stream.

In addition to the records of the quantities of suspended sediment, records of the periodic measurements of the particle-size distribution of the suspended sediment and bed material are included.

Turbidity

At some stations samples for the determination of turbidity were collected at the same frequency as samples collected for determination of suspended sediment. Turbidity, measured in Jackson turbidity units (JTU), is shown in relation to the concentration of sediment in the simultaneously collected sample.

Measured values of turbidity are significantly influenced by the type of instrument used. Turbidity values published in California reports prior to July 1966 were determined by means of a Hellige Turbidimeter and are not directly comparable with those published subsequently. Data published in parts per million as silica from July 1966 to September 1968, and in milligrams per liter as silica from October 1968 to September 1970, were measured with a model 1860 Hack Turbidimeter which is optically similar to the model 2100 Hach Turbidimeter used from October 1970 to September 1974, and the model 2100A Hach Turbidimeter used since October 1974. Scales are available for those instruments providing a readout in either milligrams per liter or in Jackson turbidity units. Hence, conversion of data for the period July 1966 through September 1970 from parts per million or milligrams per liter of silica to Jackson turbidity units can be made by use of table 4.

Table 4.--Conversion of turbidity values, measured by Hach Turbidimeters Model 1860 or 2100 from parts per million or milligrams per liter of silica to Jackson turbidity units.

Turbidity, in ppm or mg/l	Turbidity, in JTU
5	3
10	6
50	30
100	55
200	110
500	240
1,000	440

Publications

The following are the numbers of the annual series of Geological Survey water-supply papers that give information on quality of surface waters in California. Data for the Colorado River Basin are given in Part 9, The Great Basin in Part 10, and Pacific slope basins in California in Part 11.

Water year	Water-supply paper	Water year	Water-supply paper	Water year	Water-supply paper
1941	942	1951	1200	1961	1885
1942	950	1952	1253	1962	1945
1943	970	1953	1293	1963	1951
1944	1022	1954	1353	1964	1958
1945	1030	1955	1403	1965	1965
1946	1050	1956	1453	1966	1995
1947	1102	1957	1523	1967	2015
1948	1133	1958	1574	1968	2098, 2099
1949	1163	1959	1645	1969	2148, 2149
1950	1189	1960	1745	1970	2158, 2159
				1971	A2168,A2169

A In preparation.

EXPLANATION OF GROUND-WATER LEVEL RECORDS

Collection of the data

Only ground-water level data from a basic national network of observation wells are published herein. These water-level measurements are intended to provide a sampling and historical record of water-level changes in the nation's most important aquifers.

Each well is identified by means of (1) a 15-digit number that is based on the grid system of latitude and longitude as shown in figure 1, and (2) a local number that is provided for continuity with older reports and for other use as dictated by local needs (fig. 2).

Measurements are made in many types of wells under varying conditions, but the methods of measurement are standardized to the extent possible. The equipment and measuring techniques used at each observation well insure that measurements at each well are of consistent accuracy and reliability.

Water-level measurements in this report are given in feet with reference to either mean sea level (msl) or land-surface datum (lsd). Mean sea level is the datum plane on which the national network of precise levels is based; land-surface datum is a datum plane that is approximately at land surface at each well. If known, the altitude of the land-surface datum above mean sea level is given in the well description.

Water levels are reported to as many significant figures as can be justified by the local conditions. For example, in a measurement of a depth to water of several hundred feet, the error of determining the absolute value of the total depth to water may be a few tenths of a foot, whereas the error in determining the net change of water level between successive measurements may be only a hundredth or a few hundredths of a foot. For lesser depths to water, the accuracy is greater.

Publications

Publication of ground-water level data for the United States in water-supply papers was begun by the Geological Survey in 1935. From 1935 through 1939, a single water-supply paper for each year covering the entire nation was issued (Water-Supply Papers 777, 817, 840, 845, and 886). From 1940 through 1974, separate water-supply papers were issued for 6 sections of the United States. Water-level data for California are in the water-supply papers listed below, each report containing one or more calendar years (January-December) of data. Data in this report are for the 12-month water year ending September 30.

Calendar year	Water-supply paper	Calendar year	Water-supply paper	Calendar year	Water-supply paper
1940	911	1946	1076	1953	1270
1941	941	1947	1101	1954	1326
1942	949	1948	1131	1955	1409
1943	991	1949	1161	1956-60	1770
1944	1021	1950	1170	1961-65	1855
1945	1028	1951	1196	1966-70	2010
		1952	1226	1971-74	A2162

A In preparation.

HYDROLOGIC CONDITIONS

Runoff in the area covered by this volume rarely shows a consistent trend in any year. Runoff at selected sites during the 1975 water year, shown in figure 3, ranged from 68 to 201 percent of the 1941-70 median. Runoff in the area south of the Santa Ana River basin was significantly below the median. Runoff in the Santa Clara River basin and other basins to the north was well above median.

Precipitation was about 50 percent of normal in the Mojave Desert and the extreme southern part of the State along the international boundary, but was well above normal in much of the coastal area. The first significant precipitation came with a heavy storm during the third week in October in some areas near the Salton Sea and Palm Springs. Another storm in early December caused local flooding and landslides in areas near Los Angeles. Most of southern California, except the desert areas, received precipitation from three other major storms -- each coming between the 4th and 10th of February, March, and April. These storms produced heavy runoff and some local flooding. In early September, moist, unstable air from tropical storm Caroline in the Gulf of Mexico moved westward into southern California and produced heavy rainstorms. There were flash floods in many of the mountain and desert areas from San Diego to Bishop in Owens River Valley. Highways were flooded and one life was lost. Snow accumulation was not sufficient to affect runoff to a significant degree.

The quality of surface water did not change appreciably, and ground-water levels in selected wells remained near average.

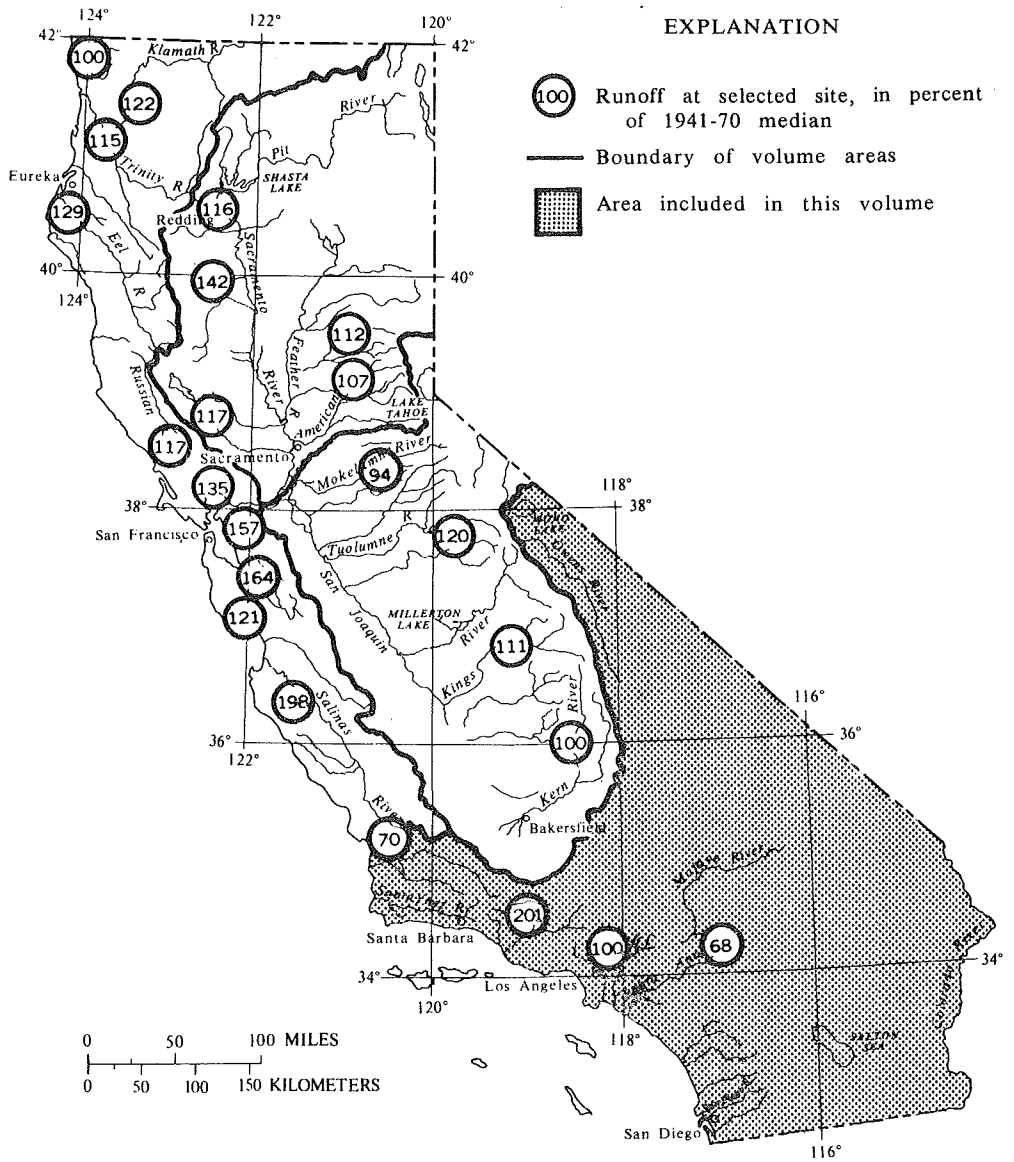

FIGURE 3.--Runoff for the current water year.

SELECTED REFERENCES

American Public Health Association, and others, 1971, Standard methods for the examination of water and wastewater, 13th ed.: New York, Am. Public Health Assoc., 874 p.

Anderson, J. U., 1963, Improved pretreatment for mineralogical analysis of samples containing organic matter, in Tenth national conference on clay and clay minerals: New York, MacMillan and Co., p. 380-388.

Barker, F. B., and Johnson, J. O., 1964, Determination of radium in water: U.S. Geol. Survey Water-Supply Paper 1696-B, 29 p.

Barker, F. B., and others, 1965, Determination of uranium in natural water: U.S. Geol. Survey Water-Supply Paper 1696-C, 25 p.

Barker, F. B., and Robinson, B. P., 1963, Determination of beta activity in water: U.S. Geol. Survey Water-Supply Paper 1696-A, 32 p.

Barnett, P. R., and Mallory, E. C., Jr., 1971, Determination of minor elements in water by emission spectroscopy: U.S. Geol. Survey Techniques Water Resources Inv., book 5, chap. A2, 31 p.

Brown, Eugene, Skougstad, M. W., and Fishman, M. J., 1970, Methods for collection and analysis of water samples for dissolved minerals and gases: U.S. Geol. Survey Techniques Water-Resources Inv., book 5, chap. A1, 160 p.

Carter, R. W., and Davidian, Jacob, 1968, General procedure for gaging streams: U.S. Geol. Survey Techniques Water-Resources Inv., book 3, chap. A6, 13 p.

Colby, B. R., 1963, Fluvial sediments--a summary of source, transportation, deposition, and measurement of sediment discharge: U.S. Geol. Survey Bull. 1181-A, 47 p.

Colby, B. R., and Hembree, C. H., 1955, Computations of total sediment discharge, Niobrara River near Cody, Nebraska: U.S. Geol. Survey Water-Supply Paper 1357, 187 p.

Colby, B. R., and Hubbell, D. W., 1961, Simplified methods for computing total sediment discharge with the modified Einstein procedure: U.S. Geol. Survey Water-Supply Paper 1593, 17 p.

Corbett, D. M., and others, 1943, Stream-gaging procedure, a manual describing methods and practices of the Geological Survey: U.S. Geol. Survey Water-Supply Paper 888, 245 p.

Goerlitz, D. F., and Brown, Eugene, 1972, Methods for analysis of organic substances in water: U.S. Geol. Survey Techniques Water-Resources Inv., book 5, chap. A3, 40 p.

Goerlitz, D. F., and Lamar, W. L., 1967, Determination of phenoxy acid herbicides in water by electron-capture and microcoulometric gas chromatography: U.S. Geol. Survey Water-Supply Paper 1817-C, 21 p.

Guy, H. R., 1969, Laboratory theory and methods for sediment analysis: U.S. Geol. Survey Techniques Water-Resources Inv., book 5, chap. C1, 58 p.

——, 1970, Fluvial sediment concepts: U.S. Geol. Survey Techniques Water-Resources Inv., book 3, chap. C1, 55 p.

Guy, H. P., and Norman, V. W., 1970, Field methods for measurement of fluvial sediment: U.S. Geol. Survey Techniques Water-Resources Inv., book 3, chap. C2, 59 p.

Hem, J. D., 1970, Study and interpretation of the chemical characteristics of natural water, 2d ed.: U.S. Geol. Survey Water-Supply Paper 1473, 363 p.

Lamar, W. L., Goerlitz, D. F., and Law, L. M., 1965, Identification and measurement of chlorinated organic pesticides in water by electroncapture gas chromatography: U.S. Geol. Survey Water-Supply Paper 1817-B, 12 p.

Langbein, W. B., and Iseri, K. T., 1960, General introduction and hydrologic definitions: U.S. Geol. Survey Water-Supply Paper 1541-A, 29 p.

Lohman, S. W., and others, 1972, Definitions of selected ground-water terms--revisions and conceptual refinements: U.S. Geol. Survey Water-Supply Paper 1988, 21 p.

Porterfield, George, 1972, Computations of fluvial-sediment discharge: U.S. Geol. Survey Techniques Water Resources Inv., book 3, chap. C3, 66 p.

Ritter, J. R., and Helley, E. J., 1969, Optical method for determining particle sizes for coarse sediment: U.S. Geol. Survey Techniques Water-Resources Inv., book 5, chap. C3, 33 p.

Rose, Arthur and Elizabeth, 1966, The condensed chemical dictionary: New York, Reinhold Pub. Corp., 7th ed., p. 257.

Shannon, C. E., and Weaver, W., 1949, The mathematical theory of communication: Urbana, Ill., Ill. Univ. Press, 117 p.

Slack, K. V., and others, 1973, Methods for collection and analysis of aquatic, biological and microbiological samples: U.S. Geol. Survey Techniques Water Resources Inv., book 5, chap. A4, 165 p.

U.S. Inter-Agency Committee on Water Resources, Subcommittee on Sedimentation, A study of methods used in measurement and analysis of sediment loads in streams. Published by the St. Anthony Falls Hydraulic Laboratory, Minneapolis, Minn.

—— 1941, Methods of analyzing sediment samples: Rept. 4.

—— 1953, Accuracy of sediment size analyses made by the bottom-withdrawal-tube method: Rept. 10.

—— 1957, The development and calibration of visual accumulation tube: Rept. 11.

—— 1957, Some fundamentals of particle size analysis: Rept. 12.

—— 1959, Federal Inter-agency sedimentation instruments and reports: Rept. AA.

—— 1961, The single stage sampler for suspended sediment: Rept. 13.

—— 1963, Determinations of fluvial sediment discharge: Rept. 14.

Table 5.--Factors for converting English units to International System (SI) units

The following factors may be used to convert the English units published herein to the International System of Units (SI). Reports will contain both the English and SI unit equivalents in the station manuscript descriptions until such time that all data are published in SI units.

Multiply English units	By	To obtain SI units
	Length	
inches (in)	25.4	millimeters (mm)
	.0254	meters (m)
feet (ft)	.3048	meters (m)
yards (yd)	.9144	meters (m)
rods	5.0292	meters (m)
miles (mi)	1.609	kilometers (km)
	Area	
acres	4047	square meters (m^2)
	.4047	*hectares (ha)
	.4047	square hectometer (hm^2)
	.004047	square kilometers (km^2)
square miles (mi^2)	2.590	square kilometers (km^2)
	Volume	
gallons (gal)	3.785	**liters (l)
	3.785	cubic decimeters (dm^3)
	3.785×10^{-3}	cubic meters (m^3)
million gallons (10^6 gal)	3785	cubic meters (m^3)
	3.785×10^{-3}	cubic hectometers (hm^3)
cubic feet (ft^3)	28.32	cubic decimeters (dm^3)
	.02832	cubic meters (m^3)
cfs-days [(ft^3/s)·d]	2447	cubic meters (m^3)
	2.447×10^{-3}	cubic hectometers (hm^3)
acre-feet (acre-ft)	1233	cubic meters (m^3)
	1.233×10^{-3}	cubic hectometers (hm^3)
	1.233×10^{-6}	cubic kilometers (km^3)
	Flow	
cubic feet per second (ft^3/s)	28.32	liters per second (l/s)
	28.32	cubic decimeters per second (dm^3/s)
	.02832	cubic meters per second (m^3/s)
gallons per minute (gpm)	.06309	liters per second (l/s)
	.06309	cubic decimeters per second (dm^3/s)
	6.309×10^{-5}	cubic meters per second (m^3/s)
million gallons per day (mgd)	43.81	cubic decimeters per second (dm^3/s)
	.04381	cubic meters per second (m^3/s)
	Mass	
tons (short)	.9072	tonne (t)

*The unit hectare is approved for use with the International System (SI) for a limited time. See NBS Special Bulletin 330, p. 15, 1972 edition.

**The unit liter is accepted for use with the International System (SI). See NBS Special Bulletin 330, p. 13, 1972 edition.

09421500 COLORADO RIVER BELOW HOOVER DAM, ARIZ.-NEV.
(National stream-quality accounting network station)

LOCATION.--Lat 36°00'55", long 114°44'16", in NE¼SW¼ sec.3, T.30 N., R.23 W., Gila and Salt River meridian, or SW¼NE¼ sec.29, T.22 S., R.65 E., Mount Diablo meridian, Mohave-Clark Counties, in powerhouse at downstream side of Hoover Dam.

DRAINAGE AREA.--167,800 mi² (434,600 km²), approximately.

PERIOD OF RECORD.--October 1933 to current year (prior to April 1934, monthly discharge only, published in WSP 1313). Published as "near Willow Beach" 1933-39 and as "below Boulder Dam" 1939-45.

GAGE.--Totalizing flowmeters on each turbine in Hoover Dam powerhouse. Prior to Nov. 1, 1939, water-stage recorder at site 9 mi (14 km) downstream at datum 594.8 ft (181.30 m) above mean sea level. Nov. 1, 1939, to June 30, 1958, water-stage recorder at site 0.8 mi (1.3 km) downstream at datum 600.35 ft (182.987 m) above mean sea level.

AVERAGE DISCHARGE.--41 years (1934-75), 13,380 ft³/s (378.9 m³/s), 9,694,000 acre-ft/yr (12,000 hm³/yr), unadjusted for storage in Lake Mead.

EXTREMES.--Current year: Maximum daily discharge, 20,900 ft³/s (592 m³/s) May 22; minimum daily, 3,570 ft³/s (101 m³/s) Dec. 21.
Period of record: Maximum daily discharge, 36,000 ft³/s (1,020 m³/s) Jan. 28, 1942; no flow at Hoover Dam part of Feb. 10, 1935; minimum daily discharge, 152 ft³/s (4.30 m³/s) Feb. 10, 1935.

REMARKS.--Flow regulated by Lake Mead since Feb. 1, 1935. Many diversions above station for irrigation, industrial, and municipal use.

COOPERATION.--Records furnished by Bureau of Reclamation.

DISCHARGE, IN CUBIC FEET PER SECOND, WATER YEAR OCTOBER 1974 TO SEPTEMBER 1975
MEAN VALUES

DAY	OCT	NOV	DEC	JAN	FEB	MAR	APR	MAY	JUN	JUL	AUG	SEP
1	10800	8930	6780	5330	4750	6670	15100	16400	8740	13500	14900	8120
2	11500	6260	12100	9960	4390	7290	16800	17200	13200	15000	10500	13600
3	11400	5610	12200	8920	9810	12500	14600	13600	12900	15600	8940	13400
4	9110	9060	10600	7650	10500	15800	16600	7780	15400	8780	16200	14100
5	5290	10700	9820	5280	11200	15000	12100	17000	16300	9010	15300	15900
6	6330	11200	8060	10300	10500	14900	9300	18000	14900	11500	11500	11000
7	12200	13300	4720	11500	11800	15100	15200	16300	8780	14600	13700	7590
8	11200	10700	3680	11100	6510	7440	14600	17500	7670	15400	11500	12600
9	10800	7490	4960	12600	6330	6200	15600	18500	13500	16000	8530	12300
10	10100	5910	6430	9390	10900	15000	15800	9960	13700	16900	6990	12500
11	10400	8580	8720	8530	15000	11300	17800	9120	15200	15100	15400	13400
12	9390	9520	6760	5660	9400	11800	10300	18000	14800	11600	16000	14100
13	9440	6780	5380	10600	11100	11700	7790	17100	16600	7340	16500	11800
14	13900	6910	5000	7700	10500	14200	17200	19700	12500	13700	15500	7450
15	14700	7560	4360	8310	5790	7500	16200	16700	7710	15500	16800	16800
16	15100	5200	5800	7420	6580	7770	16300	19500	15900	14800	12600	16400
17	13400	5200	5790	8940	9870	12500	16700	12700	16100	14600	9340	16400
18	7900	9830	4650	5560	12200	12900	17100	10400	15200	15000	15800	12500
19	6260	7160	5430	4580	14000	17800	14700	17800	14600	11100	17300	10800
20	5230	7430	5340	8640	15900	14200	9150	18700	18000	8140	15600	5770
21	8940	9440	3570	10900	15900	14400	15600	18400	10700	14500	14800	3960
22	8430	8460	4400	9100	9280	10700	16000	20900	7600	17000	14300	11700
23	10800	8520	8200	9860	5900	6680	15500	18200	15500	14300	7290	10800
24	10200	7970	8610	9140	16900	14300	15400	12400	16100	14600	9480	11800
25	9470	10600	6710	5910	15400	13900	17000	12300	15600	15300	14600	10100
26	7440	10900	8600	4710	19800	15800	12000	10100	16900	10100	15000	11600
27	5850	10400	8210	8360	15300	14100	9590	17800	16800	13400	14800	5150
28	11500	8360	6400	9670	15700	14500	15900	19100	13100	14800	14800	5350
29	10500	8100	5960	7000	---	11500	17200	16100	8790	13800	14100	7850
30	11900	7950	8310	8260	---	8550	16200	17900	14100	12600	10700	11800
31	9910	---	8830	8930	---	15700	---	13100	---	15000	7000	---
TOTAL	309390	254030	214380	259810	311210	377700	439330	488260	406890	418570	405770	336640
MEAN	9980	8468	6915	8381	11110	12180	14640	15750	13560	13500	13090	11220
MAX	15100	13300	12200	12600	19800	17800	17800	20900	18000	17000	17300	16800
MIN	5230	5200	3570	4580	4390	6200	7790	7780	7600	7340	6990	3960
AC-FT	613700	503900	425200	515300	617300	749200	871400	968500	807100	830200	804800	667700

CAL YR 1974 TOTAL 4402240 MEAN 12060 MAX 23300 MIN 2030 AC-FT 8732000
WTR YR 1975 TOTAL 4221980 MEAN 11570 MAX 20900 MIN 3570 AC-FT 8374000

09421500 COLORADO RIVER BELOW HOOVER DAM, ARIZ.-NEV.--Continued

PERIOD OF RECORD.--Chemical analyses: October 1939 to current year.
Water temperatures: October 1941 to September 1957.
Published as "below Boulder Dam" in 1940-45.

WATER QUALITY DATA, WATER YEAR OCTOBER 1974 TO SEPTEMBER 1975

DATE	TIME	INSTANTANEOUS DISCHARGE (CFS)	DISSOLVED SILICA (SIO2) (MG/L)	TOTAL IRON (FE) (UG/L)	DISSOLVED IRON (FE) (UG/L)	TOTAL MANGANESE (MN) (UG/L)	DISSOLVED MANGANESE (MN) (UG/L)	DISSOLVED CALCIUM (CA) (MG/L)	DISSOLVED MAGNESIUM (MG) (MG/L)	DISSOLVED SODIUM (NA) (MG/L)
NOV.										
05...	0800	5620	9.8	--	--	--	--	87	27	100
DEC.										
03...	0800	10120	8.8	60	40	20	0	85	29	95
JAN.										
07...	0950	15220	8.9	--	10	--	--	88	29	100
FEB.										
11...	0900	18200	9.4	150	10	10	0	85	29	100
MAR.										
11...	0815	12920	8.3	--	30	--	--	85	31	100
APR.										
08...	0900	18100	8.1	--	10	--	--	86	29	99
MAY										
06...	0745	22820	7.9	130	30	10	0	83	31	99
JUNE										
10...	0800	12220	9.0	--	10	--	--	81	28	100
JULY										
08...	0730	14700	9.3	--	10	--	--	89	29	100
AUG.										
05...	0800	15120	9.2	50	30	0	0	85	29	100
SEP.										
09...	0800	10420	9.1	--	0	--	--	84	29	100

DATE	DISSOLVED POTASSIUM (K) (MG/L)	BICARBONATE (HCO3) (MG/L)	CARBONATE (CO3) (MG/L)	DISSOLVED SULFATE (SO4) (MG/L)	DISSOLVED CHLORIDE (CL) (MG/L)	DISSOLVED FLUORIDE (F) (MG/L)	DISSOLVED NITRITE PLUS NITRATE (N) (MG/L)	DISSOLVED ORTHO. PHOSPHORUS (P) (MG/L)	DISSOLVED SOLIDS (RESIDUE AT 180 C) (MG/L)
NOV.									
05...	4.7	162	0	280	81	.4	.43	.02	715
DEC.									
03...	4.2	163	0	270	80	.3	.43	.01	689
JAN.									
07...	5.5	160	0	290	84	.3	.43	.02	715
FEB.									
11...	5.2	165	0	270	85	.3	.46	.01	713
MAR.									
11...	5.1	160	0	290	88	.3	.35	.01	720
APR.									
08...	6.4	160	0	310	86	.4	.35	.02	715
MAY									
06...	4.6	164	0	280	85	.3	.38	.02	710
JUNE									
10...	5.4	163	0	280	83	.4	.37	.01	722
JULY									
08...	4.9	160	0	300	84	.4	.34	.03	708
AUG.									
05...	5.3	160	0	300	86	.4	.36	.01	714
SEP.									
09...	5.1	161	0	290	86	.5	.35	.00	722

09421500 COLORADO RIVER BELOW HOOVER DAM, ARIZ.-NEV.--Continued

WATER QUALITY DATA, WATER YEAR OCTOBER 1974 TO SEPTEMBER 1975

DATE	DIS-SOLVED SOLIDS (SUM OF CONSTI-TUENTS) (MG/L)	DIS-SOLVED SOLIDS (TONS PER AC-FT)	HARD-NESS (CA,MG) (MG/L)	NON-CAR-BONATE HARD-NESS (MG/L)	SODIUM AD-SORP-TION RATIO	SPE-CIFIC CON-DUCT-ANCE (MICRO-MHOS)	PH (UNITS)	TEMPER-ATURE (DEG C)	TUR-BID-ITY (JTU)
NOV.									
05...	672	.97	330	200	2.4	1080	--	12.5	1
DEC.									
03...	655	.94	330	200	2.3	1070	--	12.0	1
JAN.									
07...	687	.97	340	210	2.4	1090	--	12.0	1
FEB.									
11...	667	.97	330	200	2.4	1080	--	10.5	1
MAR.									
11...	688	.98	340	210	2.4	1110	--	11.5	1
APR.									
08...	705	.97	330	200	2.4	1060	--	12.0	1
MAY									
06...	674	.97	340	200	2.4	1100	8.1	11.5	1
JUNE									
10...	669	.98	320	180	2.4	1080	7.9	11.5	5
JULY									
08...	697	.96	340	210	2.4	1080	8.1	12.0	1
AUG.									
05...	696	.97	330	200	2.4	1100	8.0	12.0	1
SEP.									
09...	685	.98	330	200	2.4	1100	8.0	13.5	3

DATE	TIME	DIS-SOLVED NITRATE (N) (MG/L)	DIS-SOLVED NITRITE (N) (MG/L)	TOTAL NITRITE PLUS NITRATE (N) (MG/L)	TOTAL KJEL-DAHL NITRO-GEN (N) (MG/L)	TOTAL NITRO-GEN (N) (MG/L)	TOTAL NITRO-GEN (NO3) (MG/L)	TOTAL PHOS-PHORUS (P) (MG/L)
NOV.								
05...	0800	.43	.00	.42	.20	.62	2.7	.04
DEC.								
03...	0800	.43	.00	.42	.16	.58	2.6	.05
JAN.								
07...	0950	.43	.00	.40	.19	.59	2.6	.01
FEB.								
11...	0900	.46	.00	.46	.22	.68	3.0	.00
MAR.								
11...	0815	.34	.01	.35	.40	.75	3.3	.02
APR.								
08...	0900	.35	.00	.37	.22	.59	2.6	.02
MAY								
06...	0745	.38	.00	.39	.15	.54	2.4	.03
JUNE								
10...	0800	.36	.01	.33	.38	.71	3.1	.02
JULY								
08...	0730	.34	.00	.36	.14	.50	2.2	.02
AUG.								
05...	0800	.35	.01	.38	.21	.59	2.6	.01
SEP.								
09...	0800	.34	.01	.35	.25	.60	2.7	.03

09421500 COLORADO RIVER BELOW HOOVER DAM, ARIZ.-NEV.--Continued

WATER QUALITY DATA, WATER YEAR OCTOBER 1974 TO SEPTEMBER 1975

DATE	TIME	TOTAL PHYTO-PLANK-TON (CELLS PER ML)	TOTAL SESTON (MG/L)	SESTON ASH WEIGHT (MG/L)	PERI-PHYTON BIOMASS ASH WEIGHT G/SQ M	PERI-PHYTON BIOMASS TOTAL DRY WEIGHT G/SQ M	UNCOR-RECTED PERI-PHYTON CHLORO-PHYLL A MG/SQ M	UNCOR-RECTED PERI-PHYTON CHLORO-PHYLL B MG/SQ M	FECAL COLI-FORM (COL. PER 100 ML)	STREP-TOCOCCI (COL-ONIES PER 100 ML)	TOTAL ORGANIC CARBON (C) (MG/L)
NOV.											
05...	0800	3800	--	--	--	--	--	--	--	--	8.6
06...	0650	--	--	--	--	--	--	--	B1	B12	--
DEC.											
03...	0800	1300	--	--	13.0	--	82.0	8.30	--	--	4.2
04...	0730	--	--	--	--	--	--	--	B1	B8	--
JAN.											
07...	0950	1500	--	--	--	--	--	--	--	--	--
08...	0820	--	--	--	--	--	--	--	B1	B4	--
FEB.											
11...	0900	1100	--	--	6.30	8.00	.600	.200	--	--	4.1
12...	0830	--	--	--	--	--	--	--	B1	B1	--
MAR.											
11...	0815	71	--	--	--	--	--	--	--	--	--
12...	0820	--	--	--	--	--	--	--	B1	B1	--
APR.											
09...	0830	--	--	--	--	--	--	--	B1	B1	--
MAY											
06...	0745	64	--	--	.500	.600	.400	.100	--	--	3.4
JUNE											
10...	0800	190	--	--	--	--	--	--	--	--	--
11...	0845	--	--	--	--	--	--	--	B1	B8	--
JULY											
08...	0730	--	.0	.0	--	--	--	--	--	--	--
09...	0800	--	--	--	--	--	--	--	B1	B6	--
AUG.											
05...	0800	--	.0	.0	.900	1.00	.200	.100	--	--	3.0
06...	0800	--	--	--	--	--	--	--	B1	B7	--
SEP.											
09...	0800	--	.0	.0	--	--	--	--	--	--	--
10...	0800	--	--	--	--	--	--	--	B2	B1	--

DATE	TIME	TOTAL ARSENIC (AS) (UG/L)	DIS-SOLVED ARSENIC (AS) (UG/L)	DIS-SOLVED BORON (B) (UG/L)	TOTAL CAD-MIUM (CD) (UG/L)	DIS-SOLVED CAD-MIUM (CD) (UG/L)	TOTAL CHRO-MIUM (CR) (UG/L)	DIS-SOLVED CHRO-MIUM (CR) (UG/L)	TOTAL COBALT (CO) (UG/L)	DIS-SOLVED COBALT (CO) (UG/L)
NOV.										
05...	0800	--	--	100	--	--	--	--	--	--
DEC.										
03...	0800	4	4	120	10	1	0	<10	<50	0
JAN.										
07...	0950	--	--	140	--	--	--	--	--	--
FEB.										
11...	0900	2	2	110	<10	1	0	0	50	2
MAR.										
11...	0815	--	--	130	--	--	--	--	--	--
APR.										
08...	0900	--	--	140	--	--	--	--	--	--
MAY										
06...	0745	4	5	130	<10	0	0	10	<50	3
JUNE										
10...	0800	--	--	140	--	--	--	--	--	--
JULY										
08...	0730	--	--	120	--	--	--	--	--	--
AUG.										
05...	0800	1	0	110	<10	0	10	10	0	0
SEP.										
09...	0800	--	--	140	--	--	--	--	--	--

B Results based on colony count outside the acceptable range (non-ideal colony count).

09421500 COLORADO RIVER BELOW HOOVER DAM, ARIZ.-NEV.--Continued

WATER QUALITY DATA, WATER YEAR OCTOBER 1974 TO SEPTEMBER 1975

DATE	TOTAL COPPER (CU) (UG/L)	DIS-SOLVED COPPER (CU) (UG/L)	TOTAL LEAD (PB) (UG/L)	DIS-SOLVED LEAD (PB) (UG/L)	TOTAL MERCURY (HG) (UG/L)	DIS-SOLVED MERCURY (HG) (UG/L)	TOTAL SELE-NIUM (SE) (UG/L)	DIS-SOLVED SELE-NIUM (SE) (UG/L)	DIS-SOLVED ZINC (ZN) (UG/L)
NOV.									
05...	--	--	--	--	--	--	--	--	--
DEC.									
03...	30	3	<100	7	<.1	<.1	4	4	<10
JAN.									
07...	--	--	--	--	--	--	--	--	--
FEB.									
11...	440	2	<100	2	.0	.0	4	3	20
MAR.									
11...	--	--	--	--	--	--	--	--	--
APR.									
08...	--	--	--	--	--	--	--	--	--
MAY									
06...	10	0	<100	0	.0	.0	4	4	0
JUNE									
10...	--	--	--	--	--	--	--	--	--
JULY									
08...	--	--	--	--	--	--	--	--	--
AUG.									
05...	20	1	<100	0	.0	.0	5	4	10
SEP.									
09...	--	--	--	--	--	--	--	--	--

09423000 COLORADO RIVER BELOW DAVIS DAM, ARIZ.-NEV.

LOCATION.--Lat 35°11'30", long 114°34'17", in SE¼NE¼ sec.1, T.32 S., R.66 E., Mount Diablo meridian, in Nevada, Clark County, on right bank 0.5 mi (0.8 km) downstream from Davis Dam, 29 mi (47 km) west of Kingman, Ariz., and 68 mi (109 km) downstream from Hoover Dam.

DRAINAGE AREA.--169,300 mi^2 (438,500 km^2), approximately.

PERIOD OF RECORD.--June 1905 to September 1907 (published as at "Hardyville"), March 1949 to current year.

GAGE.--Water-stage recorder. Datum of gage is 500.00 ft (152.40 m) above mean sea level; gage readings have been reduced to elevations above mean sea level. 1905-7, nonrecording gage at site 4.8 mi (7.7 km) downstream at datum about 13.4 ft (4.1 m) lower. Mar. 16 to May 3, 1949, water-stage recorder at site 0.5 mi (0.8 km) downstream at present datum. May 4, 1949, to Feb. 24, 1956, water-stage recorder at site 400 ft (120 m) upstream at present datum.

AVERAGE DISCHARGE.--26 years (1949-75), 12,620 ft^3/s (357.4 m^3/s), 9,143,000 acre-ft/yr (11,300 hm^3/yr).

EXTREMES.--Current year: Maximum discharge, 27,700 ft^3/s (784 m^3/s) May 19, Aug. 11 (elevation, 506.16 ft or 154.278 m); minimum daily, 1,760 ft^3/s (49.8 m^3/s) Dec. 5.
1905-7: Maximum daily discharge, 116,000 ft^3/s (3,290 m^3/s) June 20, 1906; minimum daily, 2,850 ft^3/s (80.7 m^3/s) Jan. 5, 1906.
1949 to current year: Maximum discharge, 31,200 ft^3/s (884 m^3/s) Apr. 22, 1952 (elevation, 513.91 ft or 156.640 m); no flow at Davis Dam parts of several days July to September 1950 and Dec. 27, 1950, when gates in dam were closed; minimum daily discharge, 285 ft^3/s (8.07 m^3/s) Aug. 3, 1950.

REMARKS.--Records excellent. Flow regulated by Lake Mead since Feb. 1, 1935, and by Lake Mohave since Jan. 17, 1950. Many diversions upstream for irrigation, industrial, and municipal uses.

DISCHARGE, IN CUBIC FEET PER SECOND, WATER YEAR OCTOBER 1974 TO SEPTEMBER 1975

DAY	OCT	NOV	DEC	JAN	FEB	MAR	APR	MAY	JUN	JUL	AUG	SEP
1	11,600	4,530	3,350	6,130	10,600	11,600	16,100	15,700	10,100	15,000	13,400	14,700
2	10,800	4,600	7,130	10,500	6,820	8,420	15,500	15,400	14,200	14,000	14,000	14,800
3	11,300	4,630	6,630	10,400	9,040	11,900	16,900	15,900	13,700	14,400	9,810	13,900
4	11,100	5,570	4,370	9,730	8,960	13,300	19,100	10,100	13,400	14,600	16,600	12,200
5	11,100	6,580	1,760	4,640	9,140	12,500	18,000	17,000	14,200	15,500	16,800	14,900
6	8,630	5,680	4,640	6,540	9,060	10,500	9,860	17,400	12,200	10,100	15,600	15,700
7	9,220	5,690	5,300	6,870	9,090	10,700	18,500	20,600	12,400	18,000	14,800	9,880
8	9,490	7,000	3,570	4,780	8,910	13,900	19,800	10,000	7,840	14,600	17,300	10,800
9	10,200	6,750	6,690	3,860	4,590	6,650	18,500	9,900	12,900	15,000	16,800	10,200
10	10,200	5,620	6,690	3,350	4,660	12,800	3,810	20,400	12,300	14,300	9,940	10,900
11	10,200	6,880	7,130	3,380	4,620	9,550	4,860	10,200	11,600	15,600	18,300	8,080
12	8,240	7,310	7,160	3,210	9,240	11,800	10,000	15,100	13,000	15,600	16,800	11,300
13	8,380	6,850	7,220	3,340	10,600	9,630	10,200	14,500	12,800	10,800	14,700	11,800
14	8,870	6,340	7,180	3,720	10,600	11,500	10,300	16,400	13,800	16,400	15,800	10,100
15	9,810	6,600	4,730	5,790	10,300	10,000	9,890	16,900	9,810	15,200	15,900	12,300
16	10,000	7,160	7,220	9,650	7,040	6,410	20,000	15,500	14,200	16,600	15,500	11,600
17	10,100	6,630	7,180	9,290	10,400	14,400	20,500	15,900	14,300	17,100	9,960	13,400
18	9,000	6,780	8,860	9,340	11,500	13,500	20,600	9,780	13,000	15,100	15,600	10,300
19	8,590	7,310	8,660	4,740	10,500	15,600	17,500	16,000	13,000	15,900	14,900	13,500
20	7,960	6,070	8,590	8,220	10,500	14,700	9,920	15,800	14,500	9,880	14,400	12,400
21	8,810	5,180	8,810	8,340	11,900	13,900	20,200	14,900	14,400	17,400	13,200	11,900
22	6,140	4,620	4,660	8,200	11,100	13,000	20,100	14,900	9,860	16,400	12,700	20,400
23	4,830	4,590	7,640	8,030	6,020	8,710	20,400	14,400	14,000	15,600	13,000	20,700
24	4,900	5,670	6,910	7,730	11,500	19,200	20,200	12,200	13,700	16,300	9,880	2,790
25	7,230	4,060	6,800	9,160	12,800	17,400	18,300	9,880	14,200	16,100	14,700	4,100
26	7,060	4,060	7,250	4,760	13,100	19,100	19,900	11,000	15,700	17,400	15,100	13,000
27	7,050	3,750	10,800	9,420	12,200	19,300	10,200	12,200	15,600	11,900	13,600	17,200
28	7,080	4,030	9,470	9,270	10,300	19,200	17,600	13,400	18,600	15,900	14,100	9,860
29	7,030	4,100	5,850	11,100	------	19,300	15,600	13,600	7,470	15,300	15,500	13,200
30	7,050	6,370	7,450	10,800	------	8,010	15,000	14,400	16,300	13,500	16,700	10,800
31	4,690	------	9,580	10,500	------	16,600	------	15,600	------	14,900	11,900	------
TOTAL	266,660	171,010	209,280	224,790	265,090	403,080	467,340	444,960	393,080	464,380	447,290	366,710
MEAN	8,602	5,700	6,751	7,251	9,468	13,000	15,580	14,350	13,100	14,980	14,430	12,220
MAX	11,600	7,310	10,800	11,100	13,100	19,300	20,600	20,600	18,600	18,000	18,300	20,700
MIN	4,690	3,750	1,760	3,210	4,590	6,410	3,810	9,780	7,470	9,880	9,810	2,790
AC-FT	528,900	339,200	415,100	445,900	525,800	799,500	927,000	882,600	779,700	921,100	887,200	727,400

CAL YR 1974 TOTAL 4,366,130 MEAN 11,960 MAX 19,100 MIN 1,760 AC-FT 8,660,000
WTR YR 1975 TOTAL 4,123,670 MEAN 11,300 MAX 20,700 MIN 1,760 AC-FT 8,179,000

09423000 COLORADO RIVER BELOW DAVIS DAM, ARIZ.-NEV.--Continued

PERIOD OF RECORD.--Chemical analyses: July 1969 to current year.

WATER QUALITY DATA, WATER YEAR OCTOBER 1974 TO SEPTEMBER 1975

DATE	TIME	INSTANTANEOUS DISCHARGE (CFS)	DISSOLVED SILICA (SIO2) (MG/L)	DISSOLVED IRON (FE) (UG/L)	DISSOLVED CALCIUM (CA) (MG/L)	DISSOLVED MAGNESIUM (MG) (MG/L)	DISSOLVED SODIUM (NA) (MG/L)	DISSOLVED POTASSIUM (K) (MG/L)	BICARBONATE (HCO3) (MG/L)	CARBONATE (CO3) (MG/L)	DISSOLVED SULFATE (SO4) (MG/L)	DISSOLVED CHLORIDE (CL) (MG/L)
OCT.												
01...	0920	13930	9.5	10	83	31	90	5.3	153	--	290	85
NOV.												
01...	0930	4930	9.3	40	84	25	100	5.5	160	--	270	82
DEC.												
02...	1135	9520	8.4	20	84	30	100	4.5	152	--	290	87
JAN.												
02...	1105	18000	4.6	10	83	27	110	5.8	153	--	290	87
FEB.												
03...	1145	11420	9.0	0	87	29	110	5.5	160	--	300	90
MAR.												
03...	1120	14100	8.3	30	84	31	99	6.1	163	--	270	88
APR.												
01...	1315	24960	8.2	10	90	29	100	6.3	162	--	300	88
MAY												
01...	0900	14160	6.9	10	87	30	100	4.8	159	0	270	89
JUNE												
02...	1200	22680	6.2	10	83	29	98	5.3	160	0	300	91
JULY												
01...	0730	25950	8.4	0	86	30	110	4.9	157	0	290	89
AUG.												
01...	0830	7790	8.6	10	85	29	100	5.3	160	0	290	94
SEP.												
02...	1150	22980	7.9	10	84	29	100	5.9	156	0	290	88

DATE	DISSOLVED FLUORIDE (F) (MG/L)	DISSOLVED NITRITE PLUS NITRATE (N) (MG/L)	DISSOLVED SOLIDS (RESIDUE AT 180 C) (MG/L)	DISSOLVED SOLIDS (SUM OF CONSTITUENTS) (MG/L)	DISSOLVED SOLIDS (TONS PER AC-FT)	HARDNESS (CA,MG) (MG/L)	NONCARBONATE HARDNESS (MG/L)	SODIUM ADSORPTION RATIO	SPECIFIC CONDUCTANCE (MICROMHOS)	TEMPERATURE (DEG C)	DISSOLVED BORON (B) (UG/L)
OCT.											
01...	.3	.40	725	671	.99	340	210	2.1	1110	18.0	--
NOV.											
01...	.3	.36	724	657	.98	310	180	2.5	1080	14.0	150
DEC.											
02...	.3	.27	731	680	.99	330	210	2.4	1100	13.5	150
JAN.											
02...	.2	.09	731	684	.99	320	190	2.7	1130	10.5	150
FEB.											
03...	.3	.27	729	711	.99	340	210	2.6	1110	10.0	140
MAR.											
03...	.3	.20	732	668	1.00	340	210	2.3	1110	10.5	140
APR.											
01...	.3	.28	736	703	1.00	340	210	2.3	1130	12.0	140
MAY											
01...	.4	.22	733	668	1.00	340	210	2.4	1100	15.0	170
JUNE											
02...	.4	.28	728	693	.99	330	200	2.4	1080	19.0	120
JULY											
01...	.5	.23	711	697	.97	340	210	2.6	1080	17.0	120
AUG.											
01...	.3	.26	712	692	.97	330	200	2.4	1080	19.0	170
SEP.											
02...	.3	.17	724	683	.98	330	200	2.4	1100	18.0	140

09423500 COLORADO RIVER AT NEEDLES, CALIF.

LOCATION.--Lat 34°51'06", long 114°36'33", in SE¼SE¼ sec.19, T.9 N., R.23 E., San Bernardino meridian, San Bernardino County, on right bank at Needles, 15 mi (24 km) upstream from gaging station near Topock, Ariz., 30 mi (48 km) downstream from Davis Dam, and 97 mi (156 km) downstream from Hoover Dam.

DRAINAGE AREA.--170,600 mi^2 (441,900 km^2), approximately.

PERIOD OF RECORD.--April 1931 to current year (elevations only).

GAGE.--Water-stage recorder. Datum of gage is 400.00 ft (121.920 m) above mean sea level. Prior to May 15, 1942, at site 550 ft (170 m) downstream and May 15, 1942, to Feb. 16, 1969, at site 200 ft (60 m) upstream; at datum 66.23 ft (20.187 m) higher prior to Jan. 12, 1952, and at present datum thereafter.

EXTREMES.--Current year: Maximum elevation, 470.84 ft (143.512 m) July 26, 27; minimum, 458.93 ft (139.882 m) Dec. 6.
Period of record: Maximum elevation, 475.77 ft (145.015 m) Nov. 30, 1944; minimum, 457.84 ft (139.550 m) Feb. 26, 1973.

REMARKS.--Flow regulated by Lake Mead since Feb. 1, 1935, and by Lake Mohave since Jan. 17, 1950.

REVISIONS (WATER YEARS).--WSP 1119: 1931-47.

GAGE HEIGHT, IN FEET, WATER YEAR OCTOBER 1974 TO SEPTEMBER 1975
MEAN VALUES

DAY	OCT	NOV	DEC	JAN	FEB	MAR	APR	MAY	JUN	JUL	AUG	SEP
1	64.33	60.38	61.17	63.35	64.07	64.35	66.51	66.25	65.49	66.17	65.74	65.26
2	64.56	60.81	60.69	62.69	63.15	64.07	66.75	66.44	64.94	65.73	65.66	65.62
3	64.40	60.83	62.16	63.72	62.73	63.79	66.92	65.76	65.67	65.75	65.00	66.03
4	64.51	60.83	61.83	63.90	63.28	65.17	67.79	65.77	65.43	66.02	65.08	65.38
5	64.26	61.47	59.62	62.20	63.18	65.14	67.72	65.11	65.00	66.24	67.02	65.34
6	64.04	61.86	59.48	61.55	63.19	64.35	65.04	67.38	65.48	64.87	66.57	66.34
7	62.78	61.51	60.63	61.66	63.37	64.40	66.32	68.35	65.03	66.06	66.00	64.78
8	63.15	61.65	61.21	61.62	63.03	64.80	67.85	66.42	64.12	66.48	67.06	64.27
9	63.67	62.10	60.40	60.80	61.95	63.84	68.97	63.76	63.70	66.11	66.93	63.83
10	63.84	61.95	61.90	60.24	60.85	63.69	64.06	65.80	64.91	65.94	65.16	64.36
11	63.88	61.60	62.45	59.83	60.79	64.29	59.79	66.01	64.91	66.37	66.16	63.48
12	63.24	62.24	62.20	59.94	61.54	63.99	62.55	64.83	64.75	66.11	67.04	63.28
13	62.96	62.18	62.18	59.81	63.15	64.33	63.64	66.00	65.10	---	66.24	64.45
14	63.30	61.94	62.23	59.82	63.89	64.05	63.68	66.46	65.41	---	66.44	64.16
15	63.09	61.86	61.68	60.42	63.99	63.87	63.65	66.87	64.73	---	66.48	64.24
16	63.69	62.05	61.39	62.04	63.59	63.20	65.93	66.54	64.71	---	66.54	64.51
17	63.79	62.09	62.22	63.44	62.23	63.72	68.26	66.51	65.76	---	64.95	64.68
18	63.53	61.94	62.56	63.11	64.17	65.27	68.83	65.14	65.24	---	65.34	64.66
19	63.13	62.19	62.91	62.35	64.33	66.44	67.84	65.06	65.21	---	66.03	64.40
20	62.86	62.04	62.96	61.62	63.98	65.87	65.48	66.29	65.65	---	65.78	64.74
21	62.88	61.59	63.06	62.72	64.46	65.81	65.89	66.04	65.84	---	65.42	65.25
22	63.03	61.16	62.19	62.60	64.48	65.84	69.04	66.02	64.67	67.79	65.31	66.03
23	61.48	60.82	61.49	62.55	63.45	63.76	68.35	66.04	64.63	67.75	65.42	68.44
24	61.09	60.81	62.20	62.63	62.68	66.36	68.72	65.22	65.47	67.69	64.32	64.31
25	61.66	61.27	61.94	62.62	65.16	67.38	67.90	64.65	65.55	67.66	64.78	59.70
26	62.23	60.47	62.07	62.35	65.29	67.80	67.77	63.38	66.22	67.90	66.02	62.61
27	62.23	60.43	63.17	61.66	64.99	68.12	66.50	64.95	66.32	66.91	65.56	66.16
28	62.24	60.26	63.83	63.19	64.38	68.23	65.47	64.93	67.60	66.82	65.57	65.38
29	62.27	60.44	62.76	63.85	---	68.13	66.88	65.43	64.50	67.26	66.13	64.55
30	62.23	60.91	61.53	64.03	---	65.65	66.17	65.73	65.20	66.69	66.74	64.79
31	62.09	---	62.75	64.12	---	64.69	---	65.92	---	66.91	65.47	---
MEAN	63.11	61.39	61.90	62.14	63.41	65.17	66.34	65.78	65.24	---	65.87	64.70
MAX	64.56	62.24	63.83	64.12	65.29	68.23	69.04	68.35	67.60	---	67.06	68.44
MIN	61.09	60.26	59.48	59.81	60.79	63.20	59.79	63.38	63.70	---	64.32	59.70

09424000 COLORADO RIVER NEAR TOPOCK, ARIZ.

LOCATION.--Lat 34°41'15", long 114°27'43", in SW¼NW¼ sec.13, T.15 N., R.21 W., Gila and Salt River meridian, Mohave County, on left bank in Mohave Canyon, 2.4 mi (3.9 km) southeast of Topock, 39 mi (63 km) upstream from Parker Dam, and 45 mi (72 km) downstream from Davis Dam.

DRAINAGE AREA.--172,300 mi^2 (446,300 km^2), approximately.

PERIOD OF RECORD.--January 1917 to current year. Daily mean elevations published since October 1938.

GAGE. Water-stage recorder. Datum of gage is 423.02 ft (128.936 m) above mean sea level; gage readings have been reduced to elevations above mean sea level. Prior to Dec. 3, 1922, at site about 1 mi (2 km) upstream at different datum.

AVERAGE DISCHARGE.--17 years (1917-34), 20,260 ft^3/s (573.8 m^3/s), 14,670,000 acre-ft/yr (18,100 hm^3/yr); 41 years (1934-75), 12,920 ft^3/s (365.9 m^3/s), 9,361,000 acre-ft/yr (11,500 hm^3/yr), unadjusted.

EXTREMES.--Current year: Maximum discharge, 20,900 ft^3/s (592 m^3/s) Apr. 24, 25 (elevation, 456.19 ft or 139.047 m); minimum daily, 2,230 ft^3/s (63.2 m^3/s) Dec. 6; minimum elevation, 448.43 ft (136.681 m) Dec. 6.
1917-34: Maximum discharge probably exceeded 200,000 ft^3/s (5,660 m^3/s) June 22, 1921; minimum, 1,480 ft^3/s (41.9 m^3/s) Aug. 17, 1934.
1934 to current year: Maximum discharge, 35,700 ft^3/s (1,010 m^3/s) Jan. 29, 1942; maximum elevation, 457.37 ft (139.406 m) July 9, 1959; minimum discharge, 375 ft^3/s (10.6 m^3/s) Feb. 14, 1935; minimum daily, 422 ft^3/s (12.0 m^3/s) Feb. 14, 1935.
Discharge of about 300,000 ft^3/s (8,500 m^3/s), based on determination at Lees Ferry gaging station, occurred about July 10, 1884. Discharge estimated to be in excess of 400,000 ft^3/s (11,300 m^3/s) probably occurred within the period 1857-68 and most likely in 1862.

REMARKS.--Records good. Many diversions above station for irrigation, municipal, and industrial uses. Flow regulated by Lake Mead since Feb. 1, 1935, and by Lake Mohave since Jan. 17, 1950.

REVISIONS (WATER YEARS).--WSP 918: 1921. WSP 1313: 1918-19(M).

DISCHARGE, IN CUBIC FEET PER SECOND, WATER YEAR OCTOBER 1974 TO SEPTEMBER 1975
MEAN VALUES

DAY	OCT	NOV	DEC	JAN	FEB	MAR	APR	MAY	JUN	JUL	AUG	SEP
1	10400	4590	5320	8820	10100	10400	14600	14800	14400	14500	13700	11500
2	11000	4460	3560	6380	9780	11000	15100	15300	10500	14100	13100	13100
3	10500	4510	5990	9240	7470	8870	15300	14800	13500	13300	13100	13600
4	11200	4440	6010	9730	8890	11200	16700	15200	13300	13800	10600	12800
5	10600	5060	4150	8870	8890	12200	17400	11200	12900	14400	15300	11600
6	10500	5820	2230	5570	8970	11700	15100	16200	13700	14100	15500	13800
7	8080	5320	3820	6340	9170	10200	12100	17800	12700	11700	14600	13600
8	8620	5250	4720	6800	8920	10600	16700	18200	12400	15300	15000	9600
9	8970	6200	3480	5190	8470	11700	18900	10500	8550	14400	16100	9630
10	9470	6050	5720	4240	5340	7920	15800	10900	11800	14400	14800	9740
11	9550	5290	6430	3520	4830	11000	4960	16400	12000	14400	11700	9760
12	9240	6120	6510	3380	4870	9520	6160	10600	11400	14900	16200	7640
13	8030	6430	6490	3150	8260	10900	9870	13700	12500	14400	15500	10200
14	8310	6160	6530	3090	9620	9800	10200	14200	12700	11400	14300	10600
15	8080	5840	6360	3490	9930	10300	10000	15600	12900	15200	14800	9320
16	8970	5990	4890	5380	9750	9600	11400	15700	10400	15200	14900	10700
17	9220	6410	6380	8520	7200	7690	17200	15100	13600	15800	13900	10500
18	9170	6060	6840	8420	9420	11900	19100	14500	13300	15700	10600	11500
19	8260	6180	7560	8220	10700	13100	18700	11100	12500	15000	14000	9520
20	7940	6510	7830	5360	10100	13400	16000	14800	12700	14300	13700	11600
21	7510	5650	7800	7430	9930	13100	12000	14700	13800	11100	13200	11700
22	8080	4980	7800	7690	10800	13400	18600	14500	13100	15600	12500	11900
23	6140	4400	5000	7740	10300	10900	19100	14400	9950	15600	12400	18300
24	4980	4330	6720	7650	6900	10600	19500	13900	13200	15200	11700	16700
25	5290	5020	6410	7470	11000	15400	18900	12200	12700	15600	9980	5290
26	6550	3990	6450	8240	12000	16400	17700	9870	14000	15600	13400	5820
27	6530	3860	7260	5420	12100	17600	17700	11200	14800	15600	13400	11900
28	6670	3510	9440	8280	11400	18000	12300	11800	16400	12400	12700	14600
29	6720	3690	8590	8870	---	18100	16000	12500	15600	14700	13400	11000
30	6610	3940	5780	10000	---	16400	15700	13400	9250	14200	14700	12200
31	6650	---	6940	10100	---	10500	---	14200	---	13100	14500	---
TOTAL	257840	156060	189010	212600	255110	373400	448790	429270	380550	445000	423280	339720
MEAN	8317	5202	6097	6858	9111	12050	14960	13850	12690	14350	13650	11320
MAX	11200	6510	9440	10100	12100	18100	19500	18200	16400	15800	16200	18300
MIN	4980	3510	2230	3090	4830	7690	4960	9870	8550	11100	9980	5290
AC-FT	511400	309500	374900	421700	506000	740600	890200	851500	754800	882700	839600	673800

CAL YR 1974 TOTAL 4079560 MEAN 11180 MAX 17700 MIN 1920 AC-FT 8092000
WTR YR 1975 TOTAL 3910630 MEAN 10710 MAX 19500 MIN 2230 AC-FT 7757000

09424000 COLORADO RIVER NEAR TOPOCK, ARIZ.--Continued

ELEVATION, IN FEET, WATER YEAR OCTOBER 1974 TO SEPTEMBER 1975
MEAN VALUES

DAY	OCT	NOV	DEC	JAN	FEB	MAR	APR	MAY	JUN	JUL	AUG	SEP
1	52.60	50.21	50.52	52.03	52.50	52.63	54.10	54.25	54.32	54.22	53.91	53.18
2	52.83	50.15	49.54	50.92	52.36	52.81	54.25	54.41	53.32	54.11	53.74	53.66
3	52.68	50.18	50.86	52.19	51.42	52.02	54.32	54.27	54.07	54.00	53.73	53.86
4	52.95	50.14	50.88	52.37	52.03	52.93	54.81	54.39	54.04	54.14	52.97	53.58
5	52.75	50.47	49.83	51.99	52.04	53.28	55.04	53.25	53.93	54.23	54.37	53.21
6	52.70	50.86	48.61	50.49	52.07	53.08	54.24	54.67	54.15	54.14	54.43	53.91
7	51.73	50.61	49.67	50.88	52.15	52.55	53.24	55.19	53.91	53.44	54.13	53.82
8	51.98	50.57	50.17	51.10	52.04	52.71	54.83	55.30	53.83	54.56	54.27	52.62
9	52.14	51.06	49.45	50.29	51.84	53.09	55.53	53.25	52.79	54.18	54.61	52.62
10	52.34	50.98	50.68	49.78	50.37	51.62	54.48	53.27	53.69	54.19	54.19	52.66
11	52.39	50.59	51.05	49.36	50.10	52.82	50.83	54.77	53.73	54.20	53.23	52.65
12	52.27	51.02	51.09	49.27	50.11	52.29	51.12	53.19	53.60	54.33	54.65	51.97
13	51.78	51.18	51.08	49.12	51.76	52.80	52.44	54.01	53.85	54.19	54.41	52.80
14	51.92	51.04	51.09	49.08	52.32	52.40	52.55	54.16	53.90	53.37	54.06	52.92
15	51.83	50.87	51.00	49.34	52.44	52.58	52.47	54.53	53.95	54.37	54.22	52.53
16	52.20	50.95	50.23	50.38	52.37	52.30	53.00	54.57	53.22	54.34	54.25	52.99
17	52.32	51.15	51.01	51.88	51.27	51.50	54.97	54.43	54.10	54.54	53.91	52.94
18	52.30	50.97	51.22	51.84	52.24	53.17	55.60	54.23	54.00	54.50	52.90	53.28
19	51.94	51.03	51.56	51.74	52.72	53.61	55.46	53.30	53.83	54.33	53.96	52.65
20	51.81	51.18	51.66	50.38	52.50	53.72	54.55	54.32	53.89	54.11	53.87	53.28
21	51.64	50.75	51.66	51.41	52.44	53.61	53.24	54.30	54.16	53.15	53.71	53.34
22	51.89	50.39	51.62	51.52	52.74	53.69	55.44	54.26	53.98	54.44	53.49	53.41
23	51.00	50.07	50.26	51.54	52.56	52.80	55.59	54.28	53.16	54.44	53.46	55.35
24	50.41	50.03	51.12	51.50	51.16	52.68	55.74	54.13	53.96	54.35	53.23	54.76
25	50.58	50.40	50.97	51.42	52.83	54.42	55.54	53.68	53.91	54.44	52.70	50.59
26	51.24	49.83	50.99	51.74	53.21	54.74	55.14	53.03	54.16	54.47	53.76	50.79
27	51.23	49.75	51.37	50.40	53.23	55.14	55.15	53.40	54.41	54.44	53.78	53.38
28	51.30	49.54	52.30	51.78	52.99	55.30	53.49	53.56	54.79	53.56	53.56	54.07
29	51.32	49.64	51.93	52.02	---	55.30	54.57	53.80	54.51	54.19	53.78	52.76
30	51.27	49.79	50.64	52.47	---	54.76	54.36	54.01	52.81	54.06	54.17	53.20
31	51.29	---	51.20	52.50	---	52.66	---	54.22	---	53.76	54.10	---
MEAN	51.89	50.51	50.81	51.06	52.06	53.19	54.20	54.08	53.87	54.15	53.86	53.09
MAX	52.95	51.18	52.30	52.50	53.23	55.30	55.74	55.30	54.79	54.56	54.65	55.35
MIN	50.41	49.54	48.61	49.08	50.10	51.50	50.83	53.03	52.79	53.15	52.70	50.59

CAL YR 1974..... MAX 55.00 MIN 48.61
WTR YR 1975..... MAX 55.74 MIN 48.61

NOTE.--Add 400.00 ft to obtain elevation above mean sea level.

09424150 COLORADO RIVER AQUEDUCT NEAR PARKER DAM, ARIZ.-CALIF.

LOCATION.--Lat 34°18'58", long 114°09'23", in NW¼SW¼ sec.28, T.3 N., R.27 E., San Bernardino meridian, in California, San Bernardino County, at intake pumping plant of Metropolitan Water District of Southern California on Lake Havasu, 1.8 mi (2.9 km) upstream from Parker Dam, and 149 mi (240 km) downstream from Hoover Dam.

PERIOD OF RECORD.--January 1939 to current year (monthly diversions only since October 1942). Published as a supplement to records for Colorado River below Parker Dam, 1942-50. Percolation return flow (monthly flow only) October 1964 to September 1973 (discontinued); prior to October 1964 miscellaneous measurements only.

GAGE.--Venturi meters in pressure lines at intake pumping plant.

AVERAGE DISCHARGE.--36 years, 858 ft^3/s (24.30 m^3/s), 621,600 acre-ft/yr (766 hm^3/yr).

EXTREMES.--Period of record: Maximum daily diversion, 3,986 acre-ft (4.91 hm^3), 2,010 ft^3/s (56.9 m^3/s) Oct. 25, 1970; no diversion at times.

REMARKS.--Pumping began Jan. 7, 1939. Figures of monthly diversion shown represent water pumped from Lake Havasu less return surface flow from Gene and Copper Basin Reservoirs. No water returned as surface flow from these reservoirs this year. Percolation return flow from Gene and Copper Basin Reservoirs is estimated as 14 acre-ft/day (17,300 m^3/day) or 5,110 acre-ft (6.30 hm^3) for the year for accounting purposes.

COOPERATION.--Diversion records furnished by Metropolitan Water District of Southern California.

MONTHLY DIVERSIONS, IN ACRE-FEET, WATER YEAR OCTOBER 1974 TO SEPTEMBER 1975

Month	Diversions			
	Maximum	Minimum	Mean	Total
October	3,633	3,411	3,494	108,309
November	2,400	1,381	1,826	54,776
December	2,793	2,471	2,664	82,596
CAL YR 1974	3,872	1,113	3,097	1,130,458
January	2,889	0	1,800	55,795
February	3,262	1,107	1,920	53,754
March	2,664	1,820	2,231	69,170
April	2,637	1,777	2,253	67,583
May	3,314	2,159	2,602	80,662
June	2,770	1,402	2,542	76,268
July	3,348	1,856	2,680	83,067
August	2,770	2,070	2,612	80,958
September	2,937	2,086	2,235	67,045
WTR YR 1975	3,633	0	2,411	879,983

09424150 COLORADO RIVER AQEDUCT NEAR PARKER DAM, ARIZ.-CALIF.--Continued

PERIOD OF RECORD.--Chemical analyses: October 1966 to current year.

REMARKS.--Chemical-quality records furnished by California Department of Water Resources. Records of discharge furnished by Metropolitan Water District of Southern California.

WATER QUALITY DATA, OCTOBER 1974 TO SEPTEMBER 1975

DATE	TIME	DIS-CHARGE (CFS)	DIS-SOLVED SILICA (SIO2) (MG/L)	DIS-SOLVED CAL-CIUM (CA) (MG/L)	DIS-SOLVED MAG-NE-SIUM (MG) (MG/L)	DIS-SOLVED SODIUM (NA) (MG/L)	DIS-SOLVED PO-TAS-SIUM (K) (MG/L)	BICAR-BONATE (HCO3) (MG/L)	CAR-BONATE (CO3) (MG/L)	ALKA-LINITY AS CACO3 (MG/L)	DIS-SOLVED SULFATE (SO4) (MG/L)	DIS-SOLVED CHLO-RIDE (CL) (MG/L)
OCT.												
09...	--	1730	7.2	79	30	107	5.0	129	1	110	308	90
NOV.												
17...	1500	884	7.6	83	30	103	4.0	144	0	118	302	88
DEC.												
11...	--	1340	7.6	87	30	103	5.0	150	0	123	307	88
JAN.												
13...	--	0	8.2	86	30	102	5.0	149	1	124	308	89
FEB.												
09...	--	1170	8.0	82	30	105	5.0	128	5	113	311	88
MAR.												
09...	1420	1115	8.2	86	30	103	5.0	146	2	124	305	87
APR.												
06...	--	1170	7.8	87	30	104	4.0	155	0	127	306	89
MAY												
04...	--	1340	5.6	85	30	106	4.0	149	1	124	307	88
JUNE												
01...	--	707	5.7	86	31	106	5.0	159	0	130	309	90
JULY												
13...	--	1342	6.8	84	30	106	5.0	153	0	125	310	90
AUG.												
10...	1425	1315	7.0	83	31	106	5.0	137	1	114	308	93
SEP.												
09...	--	1120	6.8	78	30	109	4.0	123	5	109	301	94

DATE	DIS-SOLVED FLUO-RIDE (F) (MG/L)	TOTAL NITRATE (N) (MG/L)	DIS-SOLVED SOLIDS (SUM OF CONSTI-TUENTS) (MG/L)	DIS-SOLVED SOLIDS (TONS PER AC-FT)	TOTAL NON-FILT-RABLE RESIDUE (MG/L)	HARD-NESS (CA,MG) (MG/L)	NON-CAR-BONATE HARD-NESS (MG/L)	PERCENT SODIUM	SODIUM AD-SOPP-TION RATIO	SPE-CIFIC CON-DUCT-ANCE (MICRO-MHOS)	TEMPER-ATURE (DEG C)	TUR-BID-ITY (JTU)
OCT.												
09...	.4	.00	692	.94	4	321	210	42	2.6	1110	24.5	1
NOV.												
17...	.4	.11	691	.94	1	333	220	40	2.5	1100	19.0	<1
DEC.												
11...	.4	.02	703	.96	2	339	220	39	2.4	1100	13.5	<1
JAN.												
13...	.4	.07	704	.96	--	338	210	39	2.4	1100	8.0	<1
FEB.												
09...	.4	.00	697	.95	15	328	220	41	2.5	1060	10.0	1
MAR.												
09...	.4	.14	699	.95	2	336	210	39	2.4	1090	13.5	1
APR.												
06...	.4	.11	707	.96	2	343	220	40	2.5	1040	13.5	2
MAY												
04...	.5	.09	703	.96	2	338	210	40	2.5	1100	18.5	<1
JUNE												
01...	.4	.11	713	.97	0	342	210	40	2.5	--	22.0	<1
JULY												
13...	.4	.16	709	.96	7	333	210	40	2.5	--	28.0	<1
AUG.												
10...	.4	.02	703	.96	2	335	220	40	2.5	1090	28.0	2
SEP.												
09...	.4	<.02	690	.94	3	320	210	42	2.7	1070	28.0	2

09424190 COLORADO RIVER AQUEDUCT NEAR SAN JACINTO, CALIF.
(National stream-quality accounting network station)

LOCATION.--Lat 33°49'18", long 116°58'01", in NE¼ sec.15, T.4 S., R.1 W., San Bernardino County, at west portal of San Jacinto Tunnel, 1.7 mi (2.8 km) southeast of Gilman Hot Springs, and 2.5 mi (40 km) north of San Jacinto.

PERIOD OF RECORD.--Chemical analyses: October 1974 to September 1975.
Sediment records: Water year 1975 (partial-record station).

REMARKS.--Discharge values furnished by Metropolitan Water District from the aqueduct records.

WATER QUALITY DATA, WATER YEAR OCTOBER 1974 TO SEPTEMBER 1975

DATE	TIME	INSTANTANEOUS DISCHARGE (CFS)	SPECIFIC CONDUCTANCE (MICROMHOS)	TEMPERATURE (DEG C)
OCT.				
17...	1015	1760	1020	16.0
NOV.				
26...	1045	910	1070	17.2
DEC.				
02...	0645	1345	1100	15.0
03...	0630	1345	1110	15.0
04...	1300	1345	1110	15.6
05...	1155	1345	1100	16.1
09...	0630	1345	1110	14.4
10...	1515	1345	1110	13.9
11...	1030	1345	1110	13.9
12...	1200	1345	1120	15.0
16...	0645	1345	1110	13.3
17...	0645	1345	1110	13.9
18...	1400	1345	1110	14.4
19...	1000	1345	1110	13.9
19...	1110	1340	1100	14.2
24...	1130	1345	1120	12.2
26...	1300	1345	1120	11.1
27...	1600	1345	1120	11.1
30...	1130	1345	1120	11.7
31...	1100	1345	1110	11.1
JAN.				
02...	0930	1345	1120	10.6
04...	1030	1345	1120	10.6
05...	1000	1345	1120	10.6
06...	1130	1345	1110	10.0
07...	0645	1345	1120	10.6
08...	1115	1345	1120	11.1
15...	1030	7.0	338	18.0
20...	1100	1330	1120	11.7
21...	0645	1330	1120	11.7
23...	1600	1345	1120	11.7
24...	1610	1345	1120	11.7
27...	1130	1325	1120	11.7
28...	0640	1325	1120	11.1
29...	1130	1330	1120	11.1
30...	1500	1330	1120	10.0
FEB.				
03...	0810	1055	1110	11.1
04...	0645	1100	1120	10.6
05...	0915	1100	1110	10.6
06...	1630	1100	1120	10.6
10...	0645	1100	1120	11.7
11...	0645	1100	1120	11.7
12...	1330	1110	1120	11.7
13...	0645	1120	1120	11.7
17...	1600	1120	1120	11.7
18...	0645	1120	1120	10.6
19...	0700	1100	1120	10.6
20...	0730	645	1110	11.1
24...	1030	672	1120	10.6
25...	0645	670	1120	10.6
26...	0655	670	1110	10.6
27...	1050	670	1140	13.5
MAR.				
02...	1430	670	1110	15.0
03...	0700	1120	1110	14.4
04...	0645	1120	1110	14.4
06...	1000	1120	1110	13.9
09...	1700	1120	1110	14.4
11...	0645	1120	1110	14.4
12...	1600	1120	1110	14.4
16...	0645	1120	1110	14.4
17...	0720	1120	1110	14.4
18...	0715	1120	1110	14.4
19...	0830	1120	1110	14.4
20...	1700	1120	1100	15.0
24...	0700	1120	1100	15.0
25...	0700	1120	1100	15.0
26...	0700	1120	1100	15.0
27...	0700	1120	1110	14.4
31...	1220	1120	1090	13.5

09424190 COLORADO RIVER AQUEDUCT NEAR SAN JACINTO, CALIF.--Continued

WATER QUALITY DATA, WATER YEAR OCTOBER 1974 TO SEPTEMBER 1975

DATE	TIME	INSTANTANEOUS DISCHARGE (CFS)	SPECIFIC CONDUCTANCE (MICROMHOS)	TEMPERATURE (DEG C)
APR.				
01...	0645	1120	1100	14.4
02...	1730	1110	1100	14.4
03...	0645	1120	1100	14.4
04...	0700	1120	1100	14.4
07...	0700	1120	1100	13.9
08...	1000	1120	1100	14.4
09...	0845	1120	1100	14.4
10...	0700	1120	1100	14.4
14...	0700	1120	1100	15.6
15...	0700	1120	1100	15.6
16...	0700	1120	1100	15.6
17...	0700	1120	1100	15.6
21...	0700	1130	1100	16.7
22...	0700	1130	1100	17.2
23...	0700	1130	1110	17.2
24...	0700	1130	1100	17.8
28...	0700	1130	1110	16.7
29...	0645	1130	1110	17.2
30...	1315	1130	1130	18.5
30...	1645	1130	1110	17.2
MAY				
01...	0630	1130	1110	17.8
05...	0700	1330	1110	18.9
06...	0650	1330	1110	18.9
07...	0700	1330	1110	17.2
08...	0650	1330	1110	17.2
12...	0650	1330	1110	20.6
13...	0650	1330	1110	20.6
22...	1045	1350	1110	19.5
26...	1730	1130	1110	21.7
27...	0645	1130	1110	21.7
28...	0645	1120	1100	22.2
29...	0640	1120	1110	22.2
JUNE				
02...	0700	1120	1110	22.8
03...	0645	1120	1110	22.8
04...	0700	1130	1110	22.8
05...	0900	1130	1110	23.3
09...	0700	1130	1110	23.3
10...	0645	1340	1110	23.3
11...	0700	1340	1110	23.9
12...	0700	1340	1110	23.9
17...	0640	1340	1070	26.1
24...	1030	1340	1100	24.8
24...	1145	1340	1100	24.8
30...	1345	1340	1060	24.4
JULY				
01...	1410	1340	1040	25.6
02...	0735	1340	1070	25.6
03...	0735	1350	1050	25.6
07...	0700	1340	1050	25.6
08...	0700	1340	1050	26.1
09...	0650	1340	1030	26.1
10...	1100	1340	1060	26.1
14...	0650	1340	1040	26.1
15...	0700	1340	1050	26.1
16...	0645	1340	1060	26.1
21...	0650	1340	1060	26.1
22...	0650	1350	1060	26.1
23...	0645	1350	1060	26.1
24...	0650	1350	1040	26.1
28...	0640	1350	1050	27.2
28...	1100	1350	1070	26.7
29...	0630	1350	1040	26.1
30...	0630	1350	1060	26.1
31...	0630	1350	1040	26.1
AUG.				
04...	1600	1350	1100	26.7
05...	0645	1350	1040	26.7
06...	0700	1350	1110	27.2
07...	0645	1350	1090	27.8
11...	0700	1350	1100	26.7
12...	0700	1350	1070	26.7
13...	0645	1350	1060	26.7
14...	0645	1350	1070	26.7
15...	0645	1350	1100	25.6
19...	0645	1350	1080	25.6
20...	0645	1350	1090	25.0
21...	0645	1350	1080	25.0
25...	0700	1350	1100	25.6
26...	0645	1350	1100	25.6
27...	0700	1350	1090	25.6
28...	0645	1350	1090	25.6
29...	1045	1350	1100	26.0

09424190 COLORADO RIVER AQUEDUCT NEAR SAN JACINTO, CALIF.--Continued

WATER QUALITY DATA, WATER YEAR OCTOBER 1974 TO SEPTEMBER 1975

DATE	TIME	INSTANTANEOUS DISCHARGE (CFS)	SPECIFIC CONDUCTANCE (MICROMHOS)	TEMPERATURE (DEG C)
SEP.				
02...	0700	1350	1040	25.0
03...	0820	1140	1040	25.5
04...	0820	1140	1050	25.5
05...	0715	1120	1040	25.5
08...	0720	1120	1040	25.5
10...	1120	1120	1040	25.0
11...	0730	1120	1070	25.0
12...	0725	1120	1040	24.5
15...	1650	1120	1050	25.5
16...	0645	1120	1040	25.5
17...	0645	1120	1040	25.5
18...	0645	1120	1040	25.5
22...	0705	1120	1060	25.0
23...	0705	1120	1060	25.0
24...	0645	1120	1040	24.5
25...	0650	1120	1050	24.0
29...	0700	1120	1090	24.0
30...	0705	1120	1060	24.0
30...	1000	1120	1070	24.5

DATE	TIME	INSTANTANEOUS DISCHARGE (CFS)	DISSOLVED SILICA (SIO2) (MG/L)	DISSOLVED CALCIUM (CA) (MG/L)	DISSOLVED MAGNESIUM (MG) (MG/L)	DISSOLVED SODIUM (NA) (MG/L)	DISSOLVED POTASSIUM (K) (MG/L)	BICARBONATE (HCO3) (MG/L)	CARBONATE (CO3) (MG/L)	ALKALINITY AS CACO3 (MG/L)	DISSOLVED SULFATE (SO4) (MG/L)
OCT.											
17...	1015	1760	9.6	80	33	100	4.8	148	--	121	300
NOV.											
26...	1045	910	8.8	82	29	99	4.8	152	--	125	280
DEC.											
19...	1110	1340	9.1	85	29	100	4.7	156	--	128	300
JAN.											
15...	1030	7.0	25	32	4.2	31	4.1	146	--	120	28
FEB.											
27...	1050	670	7.7	88	29	110	5.1	157	0	129	300
MAR.											
31...	1220	1120	7.3	84	30	100	5.9	160	0	131	310
APR.											
30...	1315	1130	7.7	86	30	100	5.0	161	0	132	280
MAY											
22...	1045	1350	6.8	87	33	100	6.2	164	0	135	280
JUNE											
24...	1030	1340	6.3	85	31	100	5.1	163	0	134	300
JULY											
28...	1100	1350	8.3	83	31	110	5.3	160	0	131	300
AUG.											
29...	1045	1350	8.3	82	29	110	6.7	152	0	125	290
SEP.											
30...	1000	1120	8.5	81	30	100	4.7	151	0	124	290

09424190 COLORADO RIVER AQUEDUCT NEAR SAN JACINTO, CALIF.--Continued

WATER QUALITY DATA, WATER YEAR OCTOBER 1974 TO SEPTEMBER 1975

DATE	DIS-SOLVED CHLO-RIDE (CL) (MG/L)	DIS-SOLVED FLUO-RIDE (F) (MG/L)	TOTAL NITRITE PLUS NITRATE (N) (MG/L)	TOTAL KJEL-DAHL NITRO-GEN (N) (MG/L)	TOTAL NITRO-GEN (N) (MG/L)	TOTAL NITRO-GEN (NO3) (MG/L)	TOTAL PHOS-PHORUS (P) (MG/L)	DIS-SOLVED SOLIDS (RESI-DUE AT 180 C) (MG/L)	DIS-SOLVED SOLIDS (SUM OF CONSTI-TUENTS) (MG/L)	DIS-SOLVED SOLIDS (TONS PER AC-FT)	HARD-NESS (CA,MG) (MG/L)
OCT.											
17...	90	.3	.15	.31	.46	2.0	.02	725	691	.99	340
NOV.											
26...	89	.3	.21	.59	.80	3.5	.02	720	668	.98	320
DEC.											
19...	93	.3	.23	.23	.46	2.0	.03	788	698	1.07	330
JAN.											
15...	17	.3	.19	.35	.54	2.4	.04	211	214	.29	97
FEB.											
27...	92	.3	.13	.28	.41	1.8	.02	743	710	1.01	340
MAR.											
31...	86	.5	.14	.16	.30	1.3	.00	735	703	1.00	330
APR.											
30...	93	.3	.19	.52	.71	3.1	.00	729	681	.99	340
MAY											
22...	90	.4	.14	.39	.53	2.3	.04	744	684	1.01	350
JUNE											
24...	88	.4	.24	.22	.46	2.0	.01	734	696	1.00	340
JULY											
28...	90	.4	.14	.34	.48	2.1	.02	721	707	.98	340
AUG.											
29...	89	.3	.11	.34	.45	2.0	.05	714	690	.97	320
SEP.											
30...	89	.3	.11	.35	.46	2.0	.01	723	678	.98	330

DATE	NON-CAR-BONATE HARD-NESS (MG/L)	PERCENT SODIUM	SODIUM AD-SORP-TION RATIO	SPE-CIFIC CON-DUCT-ANCE (MICRO-MHOS)	PH (UNITS)	TEMPER-ATURE (DEG C)	TUR-BID-ITY (JTU)	TOTAL PHYTO-PLANK-TON (CELLS PER ML)	FECAL COLI-FORM (COL. PER 100 ML)	STREP-TOCOCCI (COL-ONIES PER 100 ML)	TOTAL ORGANIC CARBON (C) (MG/L)
OCT.											
17...	210	39	2.4	1020	7.9	16.0	4	2000	81	86	5.2
NOV.											
26...	200	39	2.4	1070	8.3	17.2	2	2300	43	83	--
DEC.											
19...	200	39	2.4	1100	8.5	14.2	2	600	213	29	--
JAN.											
15...	0	40	1.4	338	8.5	18.0	1	24	0	0	1.3
FEB.											
27...	210	41	2.6	1140	8.4	13.5	2	2100	83	86	--
MAR.											
31...	200	39	2.4	1090	8.0	13.5	1	870	0	85	--
APR.											
30...	210	39	2.4	1130	8.5	18.5	2	840	0	0	3.0
MAY											
22...	220	38	2.3	1110	8.5	19.5	1	2400	81	81	--
JUNE											
24...	210	39	2.4	1100	8.4	24.8	1	2200	1	82	--
JULY											
28...	200	41	2.6	1070	8.3	26.7	1	1100	<1	83	5.2
AUG.											
29...	200	42	2.7	1100	8.4	26.0	2	2900	0	82	--
SEP.											
30...	200	40	2.4	1070	8.3	24.5	0	1900	0	83	--

09424190 COLORADO RIVER AQUEDUCT NEAR SAN JACINTO, CALIF.--Continued

BIOLOGICAL ANALYSES, WATER YEAR OCTOBER 1974 TO SEPTEMBER 1975

PHYTOPLANKTON

DATE	PHYLUM .CLASS ..ORDER ...FAMILY ....GENUS .....SPECIES	COMMON NAME	COUNT (CELLS/ML)	PERCENT OF TOTAL
OCT 17	CHLOROPHYTA	GREEN ALGAE		
	.CHLOROPHYCEAE			
	..CHLOROCOCCALES			
	...OOCYSTACEAE			
	....ANKISTRODESMUS		29	1
	....ECHINOSPHAERELLA		110	6
	...SCENEDESMACEAE			
	....SCENEDESMUS		170	9
	CHRYSOPHYTA	YELLOW-GREEN ALGAE		
	.BACILLARIOPHYCEAE	DIATOMS		
	..CENTRALES	CENTRIC		
	...COSCINODISCACEAE			
	....CYCLOTELLA		260	13
	..PENNALES	PENNATE		
	...ACHNANTHACEAE			
	....ACHNANTHES		290	14
	...CYMBELLACEAE			
	....CYMBELLA		29	1
	...FRAGILARIACEAE			
	....SYNEDRA		430	21
	...NAVICULACEAE	NAVICULOID		
	....NAVICULA		57	3
	...NITZSCHIACEAE			
	....NITZSCHIA		630	31
	TOTAL PHYTOPLANKTON		2000	
NOV 26	CHLOROPHYTA	GREEN ALGAE		
	.CHLOROPHYCEAE			
	..CHLOROCOCCALES			
	...COELASTRACEAE			
	....COELASTRUM		570	25
	...OOCYSTACEAE			
	....CHLORELLA		340	15
	....TETRAEDRON		250	11
	...SCENEDESMACEAE			
	....SCENEDESMUS		910	40
	....TETRASTRUM		21	1
	CHRYSOPHYTA	YELLOW-GREEN ALGAE		
	.BACILLARIOPHYCEAE	DIATOMS		
	..PENNALES	PENNATE		
	...FRAGILARIACEAE			
	....SYNEDRA		42	2
	...NAVICULACEAE	NAVICULOID		
	....NAVICULA		150	6
	TOTAL PHYTOPLANKTON		2300	
DEC 19	CHLOROPHYTA	GREEN ALGAE		
	.CHLOROPHYCEAE			
	..CHLOROCOCCALES			
	...OOCYSTACEAE			
	....ANKISTRODESMUS		22	4
	....TETRAEDRON		43	7
	...SCENEDESMACEAE			
	....SCENEDESMUS		130	21
	CHRYSOPHYTA	YELLOW-GREEN ALGAE		
	.BACILLARIOPHYCEAE	DIATOMS		
	..CENTRALES	CENTRIC		
	...COSCINODISCACEAE			
	....CYCLOTELLA		86	14
	..PENNALES	PENNATE		
	...ACHNANTHACEAE			
	....ACHNANTHES		43	7
	...CYMBELLACEAE			
	....CYMBELLA		22	4
	...NAVICULACEAE	NAVICULOID		
	....NAVICULA		170	29
	...NITZSCHIACEAE			
	....NITZSCHIA		86	14
	TOTAL PHYTOPLANKTON		600	
JAN 1	CHRYSOPHYTA	YELLOW-GREEN ALGAE		
	.BACILLARIOPHYCEAE	DIATOMS		
	..PENNALES	PENNATE		
	...CYMBELLACEAE			
	....EPITHEMIA		8	33
	...NAVICULACEAE	NAVICULOID		
	....NAVICULA		8	33
	...NITZSCHIACEAE			
	....HANTZSCHIA		8	33
	TOTAL PHYTOPLANKTON		24	

09424190 COLORADO RIVER AQUEDUCT NEAR SAN JACINTO, CALIF.--Continued

BIOLOGICAL ANALYSES, WATER YEAR OCTOBER 1974 TO SEPTEMBER 1975

PHYTOPLANKTON

DATE	PHYLUM .CLASS ..ORDER ...FAMILY ....GENUS .....SPECIES	COMMON NAME	COUNT (CELLS/ML)	PERCENT OF TOTAL
FEB 27	CHLOROPHYTA	GREEN ALGAE		
	.CHLOROPHYCEAE			
	..CHLOROCOCCALES			
	...OOCYSTACEAE			
	....OOCYSTIS		23	1
	...SCENEDESMACEAE			
	....SCENEDESMUS		140	6
	CHRYSOPHYTA	YELLOW-GREEN ALGAE		
	.BACILLARIOPHYCEAE	DIATOMS		
	..PENNALES	PENNATE		
	...ACHNANTHACEAE			
	....ACHNANTHES		140	6
	...DIATOMACEAE			
	....DIATOMA		68	3
	...FRAGILARIACEAE			
	....FRAGILARIA		23	1
	...NAVICULACEAE	NAVICULOID		
	....NAVICULA		45	2
	...NITZSCHIACEAE			
	....NITZSCHIA		140	6
	CYANOPHYTA	BLUE-GREEN ALGAE		
	.MYXOPHYCEAE			
	..OSCILLATORIALES	FILAMENTOUS		
	...OSCILLATORIACEAE			
	....OSCILLATORIA		1600	74
	TOTAL PHYTOPLANKTON		2100	
MAR 31	CHLOROPHYTA	GREEN ALGAE		
	.CHLOROPHYCEAE			
	..CHLOROCOCCALES			
	...OOCYSTACEAE			
	....OOCYSTIS		79	9
	..VOLVOCALES			
	...CHLAMYDOMONADACEAE			
	....CHLAMYDOMONAS		40	5
	CHRYSOPHYTA	YELLOW-GREEN ALGAE		
	.BACILLARIOPHYCEAE	DIATOMS		
	..PENNALES	PENNATE		
	...ACHNANTHACEAE			
	....ACHNANTHES		99	11
	...CYMBELLACEAE			
	....CYMBELLA		40	5
	...DIATOMACEAE			
	....DIATOMA		40	5
	...NAVICULACEAE	NAVICULOID		
	....NAVICULA		40	16
	...NITZSCHIACEAE			
	....NITZSCHIA		60	7
	CYANOPHYTA	BLUE-GREEN ALGAE		
	.MYXOPHYCEAE			
	..OSCILLATORIALES	FILAMENTOUS		
	...OSCILLATORIACEAE			
	....OSCILLATORIA		360	41
	PYRROPHYTA			
	.DINOPHYCEAE			
	..PERIDINIALES			
	...GLENODINIACEAE			
	....GLENODINIUM		20	2
	TOTAL PHYTOPLANKTON		870	

09424190 COLORADO RIVER AQUEDUCT NEAR SAN JACINTO, CALIF.--Continued

BIOLOGICAL ANALYSES, WATER YEAR OCTOBER 1974 TO SEPTEMBER 1975

PHYTOPLANKTON

DATE	PHYLUM .CLASS ..ORDER ...FAMILY ....GENUS .....SPECIES	COMMON NAME	COUNT (CELLS/ML)	PERCENT OF TOTAL
APR 30	CHLOROPHYTA	GREEN ALGAE		
	.CHLOROPHYCEAE			
	..CHLOROCOCCALES			
	...OOCYSTACEAE			
	....OOCYSTIS		52	6
	CHRYSOPHYTA	YELLOW-GREEN ALGAE		
	.BACILLARIOPHYCEAE	DIATOMS		
	..PENNALES	PENNATE		
	...ACHNANTHACEAE			
	....ACHNANTHES		140	17
	....COCCONEIS		13	2
	...CYMBELLACEAE			
	....CYMBELLA		120	14
	...DIATOMACEAE			
	....DIATOMA		13	2
	...FRAGILARIACEAE			
	....FRAGILARIA		39	5
	....SYNEDRA		65	8
	...NAVICULACEAE	NAVICULOID		
	....NAVICULA		130	15
	...NITZSCHIACEAE			
	....NITZSCHIA		26	3
	.CHRYSOPHYCEAE			
	..CHRYSOMONADALES			
	...OCHROMONADACEAE			
	....DINOBRYON		250	29
	TOTAL PHYTOPLANKTON		840	
MAY 22	CHLOROPHYTA	GREEN ALGAE		
	.CHLOROPHYCEAE			
	..CHLOROCOCCALES			
	...SCENEDESMACEAE			
	....SCENEDESMUS		700	29
	..VOLVOCALES			
	...CHLAMYDOMONADACEAE			
	....CHLAMYDOMONAS		70	3
	CHRYSOPHYTA	YELLOW-GREEN ALGAE		
	.BACILLARIOPHYCEAE	DIATOMS		
	..PENNALES	PENNATE		
	...ACHNANTHACEAE			
	....ACHNANTHES		840	35
	...CYMBELLACEAE			
	....CYMBELLA		210	9
	...FRAGILARIACEAE			
	....FRAGILARIA		140	6
	....SYNEDRA		70	3
	...NAVICULACEAE	NAVICULOID		
	....NAVICULA		210	9
	.CHRYSOPHYCEAE			
	..CHRYSOMONADALES			
	...OCHROMONADACEAE			
	....DINOBRYON		70	3
	EUGLENOPHYTA			
	.CRYPTOPHYCEAE			
	..CRYPTOMONADALES			
	...CRYPTOMONADACEAE			
	....CRYPTOMONAS		70	3
	TOTAL PHYTOPLANKTON		2400	
JUNE 24	CHLOROPHYTA	GREEN ALGAE		
	.CHLOROPHYCEAE			
	..CHLOROCOCCALES			
	...HYDRODICTYACEAE			
	....PEDIASTRUM		830	37
	...SCENEDESMACEAE			
	....SCENEDESMUS		100	5
	..VOLVOCALES			
	...CHLAMYDOMONADACEAE			
	....CHLAMYDOMONAS		100	5
	CHRYSOPHYTA	YELLOW-GREEN ALGAE		
	.BACILLARIOPHYCEAE	DIATOMS		
	..CENTRALES	CENTRIC		
	...COSCINODISCACEAE			
	....CYCLOTELLA		100	5
	..PENNALES	PENNATE		
	...ACHNANTHACEAE			
	....ACHNANTHES		100	5
	...CYMBELLACEAE			
	....CYMBELLA		100	5
	...NAVICULACEAE	NAVICULOID		
	....NAVICULA		780	35
	...NITZSCHIACEAE			
	....NITZSCHIA		100	5
	TOTAL PHYTOPLANKTON		2200	

09424190 COLORADO RIVER AQUEDUCT NEAR SAN JACINTO, CALIF.--Continued

BIOLOGICAL ANALYSES, WATER YEAR OCTOBER 1974 TO SEPTEMBER 1975

PHYTOPLANKTON

DATE	PHYLUM .CLASS ..ORDER ...FAMILY ....GENUS .....SPECIES	COMMON NAME	COUNT (CELLS/ML)	PERCENT OF TOTAL
JULY 28	CHLOROPHYTA	GREEN ALGAE		
	.CHLOROPHYCEAE			
	..CHLOROCOCCALES			
	...HYDRODICTYACEAE			
	....PEDIASTRUM			0
	...OOCYSTACEAE			
	....CHODATELLA		35	3
	....OOCYSTIS		140	12
	...SCENEDESMACEAE			
	....SCENEDESMUS			0
	..VOLVOCALES			
	...CHLAMYDOMONADACEAE			
	....CHLAMYDOMONAS			0
	..ZYGNEMATALES			
	...DESMIDIACEAE			
	....STAURASTRUM			0
	CHRYSOPHYTA	YELLOW-GREEN ALGAE		
	.BACILLARIOPHYCEAE	DIATOMS		
	..PENNALES	PENNATE		
	...ACHNANTHACEAE			
	....ACHNANTHES		110	9
	...CYMBELLACEAE			
	....CYMBELLA			0
	...FRAGILARIACEAE			
	....FRAGILARIA			0
	...NAVICULACEAE	NAVICULOID		
	....NAVICULA		670	56
	CHRYSOPHYTA	YELLOW-GREEN ALGAE		
	.BACILLARIOPHYCEAE	DIATOMS		
	..PENNALES	PENNATE		
	...TABELLARIACEAE			
	....TETRACYCLUS			0
	...NITZSCHIACEAE			
	....DENTICULA			0
	....NITZSCHIA		70	6
	CYANOPHYTA	BLUE-GREEN ALGAE		
	.MYXOPHYCEAE			
	..OSCILLATORIALES	FILAMENTOUS		
	...OSCILLATORIACEAE			
	....PHORMIDIUM		180	15
	PYRROPHYTA			
	.DINOPHYCEAE			
	..PERIDINIALES			
	...GLENODINIACEAE			
	....GLENODINIUM			0
	TOTAL PHYTOPLANKTON		1200	
AUG 29	CHLOROPHYTA	GREEN ALGAE		
	.CHLOROPHYCEAE			
	..CHLOROCOCCALES			
	...COELASTRACEAE			
	....COELASTRUM			0
	...OOCYSTACEAE			
	....ANKISTRODESMUS			0
	....OOCYSTIS			0
	...SCENEDESMACEAE			
	....SCENEDESMUS		600	20
	..VOLVOCALES			
	...CHLAMYDOMONADACEAE			
	....CHLAMYDOMONAS			0
	...PHACOTACEAE			
	....PHACOTUS			0
	..ZYGNEMATALES			
	...DESMIDIACEAE			
	....STAURASTRUM			0
	CHRYSOPHYTA	YELLOW-GREEN ALGAE		
	.BACILLARIOPHYCEAE	DIATOMS		
	..PENNALES	PENNATE		
	...ACHNANTHACEAE			
	....ACHNANTHES		150	5
	...CYMBELLACEAE			
	....CYMBELLA		150	5
	...FRAGILARIACEAE			
	....SYNEDRA			0

09424190 COLORADO RIVER AQUEDUCT NEAR SAN JACINTO, CALIF.--Continued

BIOLOGICAL ANALYSES, WATER YEAR OCTOBER 1974 TO SEPTEMBER 1975

PHYTOPLANKTON

DATE	PHYLUM .CLASS ..ORDER ...FAMILY ....GENUS .....SPECIES	COMMON NAME	COUNT (CELLS/ML)	PERCENT OF TOTAL
AUG 29 (continued)	CHRYSOPHYTA	YELLOW-GREEN ALGAE		
	.BACILLARIOPHYCEAE	DIATOMS		
	..PENNALES	PENNATE		
	...NAVICULACEAE	NAVICULOID		
	....NAVICULA		370	13
	...NITZSCHIACEAE			
	....NITZSCHIA		1400	48
	CYANOPHYTA	BLUE-GREEN ALGAE		
	.MYXOPHYCEAE			
	..CHROOCOCCALES			
	...CHROOCOCCACEAE			
	....ANACYSTIS			0
	..OSCILLATORIALES	FILAMENTOUS		
	...NOSTOCACEAE			
	....ANABAENA		220	8
	PYRROPHYTA			
	.DINOPHYCEAE			
	..PERIDINIALES			
	...PERIDINIACEAE			
	....PERIDINIUM		74	3
	TOTAL PHYTOPLANKTON		3000	
SEP 30	CHLOROPHYTA	GREEN ALGAE		
	.CHLOROPHYCEAE			
	..CHLOROCOCCALES			
	...OOCYSTACEAE			
	....ANKISTRODESMUS		20	1
	....DICTYOSPHAERIUM		78	4
	....KIRCHNERIELLA			0
	....TETRAEDRON		39	2
	...SCENEDESMACEAE			
	....SCENEDESMUS		310	16
	..VOLVOCALES			
	...CHLAMYDOMONADACEAE			
	....CHLAMYDOMONAS		20	1
	..ZYGNEMATALES			
	...DESMIDIACEAE			
	....STAURASTRUM		20	1
	CHRYSOPHYTA	YELLOW-GREEN ALGAE		
	.BACILLARIOPHYCEAE	DIATOMS		
	..CENTRALES	CENTRIC		
	...COSCINODISCACEAE			
	....CYCLOTELLA		39	2
	..PENNALES	PENNATE		
	...ACHNANTHACEAE			
	....ACHNANTHES		20	1
	...CYMBELLACEAE			
	....CYMBELLA		290	15
	...FRAGILARIACEAE			
	....SYNEDRA			0
	...NAVICULACEAE	NAVICULOID		
	....NAVICULA		310	16
	...NITZSCHIACEAE			
	....NITZSCHIA		510	27
	CYANOPHYTA	BLUE-GREEN ALGAE		
	.MYXOPHYCEAE			
	..CHROOCOCCALES			
	...CHROOCOCCACEAE			
	....AGMENELLUM		230	12
	..OSCILLATORIALES	FILAMENTOUS		
	...OSCILLATORIACEAE			
	....LYNGBYA			0
	....OSCILLATORIA			0
	....SPIRULINA			0
	PYRROPHYTA			
	.DINOPHYCEAE			
	..PERIDINIALES			
	...PERIDINIACEAE			
	....PERIDINIUM		20	1
	TOTAL PHYTOPLANKTON		1900	

QUALITATIVE AND ASSOCIATED QUANTITATIVE ANALYSES OF BIOLOGICAL DATA, WATER YEAR OCTOBER 1974 TO SEPTEMBER 1975

PERIPHYTON

Date	Length of exposure (days)	Biomass (g/m^2) Dry weight	Ash weight	Chlorophyll a (mg/m^2)	Chlorophyll b (mg/m^2)	Biomass pigment ratio	Sampling method
Feb. 27	43	10	8.8	3.4	.30	350	Polyethylene strip
June 24	33	3.2	3.0	.70	.10	210	Polyethylene strip

09424190 COLORADO RIVER AQUEDUCT NEAR SAN JACINTO, CALIF.--Continued

WATER QUALITY DATA, WATER YEAR OCTOBER 1974 TO SEPTEMBER 1975

DATE	TIME	TOTAL IRON (FE) (UG/L)	DIS-SOLVED IRON (FE) (UG/L)	TOTAL MAN-GANESE (MN) (UG/L)	SUS-PENDED MAN-GANESE (MN) (UG/L)	DIS-SOLVED MAN-GANESE (MN) (UG/L)	TOTAL ARSENIC (AS) (UG/L)	SUS-PENDED ARSENIC (AS) (UG/L)	DIS-SOLVED ARSENIC (AS) (UG/L)	TOTAL CAD-MIUM (CD) (UG/L)	SUS-PENDED CAD-MIUM (CD) (UG/L)
OCT.											
17...	1015	80	20	--	--	0	2	0	3	10	10
JAN.											
15...	1030	140	20	40	30	10	6	0	6	0	0
APR.											
30...	1315	80	10	10	8	2	3	0	3	<10	<10
JULY											
28...	1100	710	60	40	40	0	1	0	2	<10	<10

DATE	DIS-SOLVED CAD-MIUM (CD) (UG/L)	TOTAL CHRO-MIUM (CR) (UG/L)	SUS-PENDED CHRO-MIUM (CR) (UG/L)	DIS-SOLVED CHRO-MIUM (CR) (UG/L)	TOTAL COBALT (CO) (UG/L)	SUS-PENDED COBALT (CO) (UG/L)	DIS-SOLVED COBALT (CO) (UG/L)	TOTAL COPPER (CU) (UG/L)	SUS-PENDED COPPER (CU) (UG/L)	DIS-SOLVED COPPER (CU) (UG/L)	TOTAL LEAD (PB) (UG/L)
OCT.											
17...	0	0	0	0	<50	<50	0	0	0	5	<100
JAN.											
15...	1	20	20	0	<50	<50	0	130	130	4	<100
APR.											
30...	0	0	0	0	<50	<50	0	<10	<7	3	<100
JULY											
28...	0	4	4	0	0	0	0	10	8	2	<100

DATE	SUS-PENDED LEAD (PB) (UG/L)	DIS-SOLVED LEAD (PB) (UG/L)	TOTAL MERCURY (HG) (UG/L)	SUS-PENDED MERCURY (HG) (UG/L)	DIS-SOLVED MERCURY (HG) (UG/L)	TOTAL SELE-NIUM (SE) (UG/L)	SUS-PENDED SELE-NIUM (SE) (UG/L)	DIS-SOLVED SELE-NIUM (SE) (UG/L)	TOTAL ZINC (ZN) (UG/L)	SUS-PENDED ZINC (ZN) (UG/L)	DIS-SOLVED ZINC (ZN) (UG/L)
OCT.											
17...	<100	0	.1	.0	.1	4	1	3	60	40	20
JAN.											
15...	<96	4	.0	.0	.1	0	0	0	90	80	8
APR.											
30...	<98	2	.1	.0	.2	2	0	2	8	0	10
JULY											
28...	<99	1	.0	.0	.0	4	0	4	20	20	0

PARTICLE-SIZE DISTRIBUTION OF SUSPEDED SEDIMENT, WATER YEAR OCTOBER 1974 TO SEPTEMBER 1975

DATE	TIME	INSTAN-TANEOUS DIS-CHARGE (CFS)	TEMPER-ATURE (DEG C)	SUS-PENDED SEDI-MENT (MG/L)	SUS-PENDED SEDI-MENT DIS-CHARGE (T/DAY)	SUS. SED. SIEVE DIAM. % FINER THAN .062 MM
OCT.						
17...	1015	1760	16.0	10	48	53
NOV.						
26...	1045	910	17.2	11	27	54
DEC.						
19...	1110	1340	14.2	7	25	62
JAN.						
15...	1030	7.0	18.0	1	.02	12
FEB.						
27...	1050	670	13.5	7	13	78
MAR.						
31...	1220	1120	13.5	4	12	79
APR.						
30...	1315	1130	18.5	4	12	69
MAY						
22...	1045	1350	19.5	13	47	60
JUNE						
24...	1030	1340	24.8	9	33	61
JULY						
28...	1100	1350	26.7	15	55	58
AUG.						
29...	1045	1350	26.0	16	58	43
SEP.						
30...	1000	1120	24.5	16	48	36

09427500 LAKE HAVASU NEAR PARKER DAM, ARIZ.-CALIF.

LOCATION.--Lat 34°18'58", long 114°09'23", in NW¼SW¼ sec.28, T.3 N., R.27 E., San Bernardino meridian, in California, San Bernardino County, at intake pumping plant for Colorado River aqueduct of Metropolitan Water District of Southern California, 1.8 mi (2.9 km) upstream from Parker Dam on Colorado River, and 149 mi (240 km) downstream from Hoover Dam.

DRAINAGE AREA.--178,800 mi^2 (463,100 km^2), approximately.

PERIOD OF RECORD.--July 1938 to current year. Published as Parker Reservoir near Parker Dam 1938.

GAGE.--Water-stage recorder. Datum of gage is 400.54 ft (122.085 m) above mean sea level. Gage readings have been reduced to elevations above mean sea level.

EXTREMES.--Current year: Maximum contents, 623,400 acre-ft (769 hm^3) June 8 (elevation, 450.74 ft or 137.386 m); minimum, 527,200 acre-ft (650 hm^3) Mar. 25 (elevation, 445.68 ft or 135.843 m).
Period of record: Maximum contents, 693,000 acre-ft (854 hm^3), by temporary use of flashboards, Apr. 18, 1943, June 4, 1953; maximum elevation, 450.77 ft (137.395 m) June 26, 1958; minimum contents, 71,400 acre-ft (88.0 hm^3) June 25, 1942 (elevation, 412.09 ft or 125.605 m).

REMARKS.--Lake is formed by concrete-arch dam; dam was completed and storage began July 1, 1938. Usable capacity, based on April 1957 re-survey by Bureau of Reclamation between elevations 430.54 ft (131.229 m) and 450.54 ft (137.325 m), 619,400 acre-ft (764 hm^3) between elevations 400.54 ft (122.085 m), sill of regulating gates, and 450.54 ft (137.325 m), top of regulating gates. Prior to Oct. 1, 1956, different capacity table used. Dead storage, 28,600 acre-ft (35.3 hm^3) below elevation 400.54 ft (122.085 m), based on original survey. About 0.07 ft (0.021 m) fall indicated between gage and Parker Dam under normal operating conditions. Drawdown below elevation 440.54 ft (134.277 m) not legally permissible except by consent of the Metropolitan Water District of Southern California or in an emergency affecting the safety of the dam. Lake is used for flood control, power development, re-regulation of river for irrigation demand, and as a basin from which water is pumped by Metropolitan Water District of Southern California to Colorado River aqueduct. Figures given herein represent usable contents. For record of diversion to Colorado River aqueduct, see record for Colorado River aqueduct near Parker Dam (sta 09424150).

CORRECTION.--Elevation for Mar. 1, 1974, published in WRD Calif. 1974, was in error. Correct elevation was 446.95 ft. Maximum elevation (at 2400) for March was then 448.15 ft and for water year 1974 was 450.42 ft.

CONTENTS, IN ACRE-FEET, AT 2400, WATER YEAR OCTOBER 1974 TO SEPTEMBER 1975

DAY	OCT	NOV	DEC	JAN	FEB	MAR	APR	MAY	JUN	JUL	AUG	SEP
1	562,500	567,100	548,800	532,600	550,400	549,400	554,400	604,000	614,600	603,800	597,400	571,300
2	563,800	563,700	546,300	532,600	555,800	547,900	556,400	605,000	610,400	607,000	595,400	570,500
3	566,300	560,000	546,300	541,300	557,900	543,100	559,600	603,600	610,800	610,000	593,800	571,300
4	567,100	556,500	550,800	555,000	561,100	542,300	562,700	604,000	611,800	609,000	584,800	573,200
5	565,400	554,400	553,300	562,200	566,300	545,200	566,900	595,000	613,800	607,600	584,000	571,300
6	563,100	555,400	550,400	560,500	568,800	549,400	569,000	598,000	617,600	606,200	586,600	572,800
7	557,700	555,000	550,100	561,600	569,600	547,700	561,300	605,800	619,000	599,200	587,400	578,900
8	555,200	553,100	547,900	565,800	569,700	545,800	564,600	616,200	619,200	603,600	583,600	580,000
9	556,200	552,800	542,500	565,200	568,000	546,800	583,600	610,800	612,000	605,400	585,300	579,800
10	559,800	551,700	539,100	561,600	561,300	542,500	598,400	602,600	610,200	607,400	584,200	579,800
11	562,700	548,500	538,700	556,500	553,700	547,700	591,000	607,000	611,200	605,800	575,200	582,100
12	563,500	547,700	538,600	550,400	545,900	550,800	582,300	600,400	610,400	605,400	577,300	575,800
13	562,200	548,100	538,700	545,000	545,200	555,600	580,400	598,000	610,000	604,000	580,400	572,200
14	559,400	550,400	538,000	540,200	546,300	555,000	574,100	598,000	609,200	596,600	580,800	568,600
15	556,900	550,400	536,900	535,700	547,600	556,400	567,300	602,200	609,000	596,800	582,100	564,200
16	557,300	550,300	531,900	535,900	549,400	555,600	557,900	604,600	602,600	596,800	582,500	563,300
17	560,200	551,300	531,000	540,400	544,700	548,100	563,300	606,800	601,400	599,000	581,900	564,200
18	561,600	550,400	531,000	544,300	543,800	548,800	570,700	606,800	602,400	600,000	575,600	569,200
19	561,100	550,600	533,200	547,700	546,100	548,500	579,000	599,200	603,800	599,400	576,400	565,200
20	559,200	554,100	536,400	544,700	547,700	550,400	580,400	602,600	605,000	597,400	578,300	566,100
21	557,700	555,400	540,500	546,300	548,600	547,200	572,400	605,400	607,800	588,900	582,100	566,100
22	561,500	555,400	551,300	548,600	547,700	543,000	576,200	610,400	609,600	589,900	582,500	564,800
23	563,300	552,800	544,500	550,600	545,600	538,700	584,800	613,800	603,800	593,400	581,000	576,200
24	562,700	550,300	541,600	549,500	541,300	528,100	592,200	614,600	602,800	597,000	577,900	587,600
25	560,700	551,900	538,600	545,200	536,800	530,500	598,400	612,800	603,800	595,000	570,300	575,100
26	561,600	553,500	535,300	543,400	536,000	538,400	599,000	608,400	605,400	594,400	570,900	562,500
27	560,700	552,800	533,000	536,800	545,800	545,200	602,200	606,600	606,400	595,000	572,800	563,300
28	562,000	552,400	536,000	535,900	551,000	554,100	597,400	606,600	609,400	591,400	573,000	570,700
29	564,200	550,400	541,600	532,800	------	561,500	599,800	609,600	611,600	591,000	572,800	571,100
30	567,800	548,100	535,900	537,500	------	564,400	602,200	609,400	601,200	595,000	573,500	573,400
31	570,500	------	533,300	543,400	------	554,100	------	610,800	------	597,400	574,900	------
MAX	570,500	567,100	553,300	565,800	569,700	564,400	602,200	616,200	619,200	610,000	597,400	587,600
MIN	555,200	547,700	531,000	532,600	536,000	528,100	554,400	595,000	601,200	588,900	570,300	562,500
(a)	+8,000	-22,400	-14,800	+10,100	+7,600	+3,100	+48,100	+8,600	-9,600	-3,800	-22,500	-1,500

CAL YR 1974 MAX 617,000 MIN 521,500 a -11,200
WTR YR 1975 MAX 619,200 MIN 528,100 a +10,900

a Change in contents, in acre-feet.

09427500 LAKE HAVASU NEAR PARKER DAM, ARIZ.-CALIF.--Continued

ELEVATION, IN FEET, AT 2400, WATER YEAR OCTOBER 1974 TO SEPTEMBER 1975

DAY	OCT	NOV	DEC	JAN	FEB	MAR	APR	MAY	JUN	JUL	AUG	SEP
1	447.62	447.86	446.88	445.98	446.97	447.91	447.19	449.77	450.30	449.76	449.44	448.08
2	447.69	447.68	446.74	445.98	447.16	446.83	447.29	449.82	450.09	449.92	449.34	448.04
3	447.82	447.48	446.74	446.46	447.37	446.56	447.46	449.75	450.11	450.07	449.26	448.08
4	447.86	447.30	446.99	447.22	447.54	446.52	447.63	449.77	450.16	450.02	448.79	448.18
5	447.77	447.18	447.13	447.60	447.82	446.68	447.85	449.32	450.26	449.95	448.75	448.08
6	447.65	447.24	446.97	447.51	447.95	446.91	447.96	449.47	450.45	449.88	448.89	448.16
7	447.36	447.22	446.95	447.57	447.99	446.82	447.55	449.86	450.52	449.53	448.93	448.48
8	447.23	447.12	446.83	447.79	448.00	446.71	447.73	450.38	450.53	449.75	448.73	448.54
9	447.28	447.10	446.53	447.76	447.91	446.77	448.73	450.11	450.17	449.84	448.82	448.53
10	447.47	447.04	446.34	447.57	447.55	446.53	449.49	449.70	450.08	449.94	448.76	448.53
11	447.63	447.86	446.32	447.30	447.15	446.82	449.12	449.92	450.13	449.86	448.29	448.65
12	447.67	447.82	446.31	446.97	446.72	446.99	448.66	449.59	450.09	449.84	448.40	448.32
13	447.60	446.84	446.32	446.67	446.68	447.25	448.56	449.47	450.07	449.77	448.56	448.13
14	447.45	446.97	446.28	446.40	446.74	447.22	448.23	449.47	450.03	449.40	448.58	447.94
15	447.32	446.97	446.22	446.15	446.81	447.29	447.87	449.68	450.02	449.41	448.65	447.71
16	447.34	446.96	445.94	446.16	446.91	447.25	447.37	449.80	449.70	449.41	448.67	447.66
17	447.49	447.02	445.89	446.41	446.65	446.84	447.66	449.91	449.64	449.52	448.64	447.71
18	447.57	446.97	445.89	446.63	446.60	446.88	448.05	449.91	449.69	449.57	448.31	447.97
19	447.54	446.98	446.01	446.82	446.73	446.86	448.49	449.53	449.76	449.54	448.35	447.76
20	447.44	447.17	446.19	446.65	446.82	446.97	448.56	449.70	449.82	449.44	448.45	447.81
21	447.36	447.24	446.42	446.74	446.87	446.79	448.14	449.84	449.96	449.01	448.65	447.81
22	447.56	447.24	447.02	446.87	446.82	446.63	448.38	450.09	450.05	449.06	448.67	447.74
23	447.66	447.10	446.64	446.98	446.70	446.32	448.79	450.26	449.76	449.24	448.59	448.34
24	447.63	446.96	446.48	446.92	446.46	445.73	449.18	450.30	449.71	449.42	448.43	448.94
25	447.42	447.15	446.31	446.68	446.21	445.86	449.49	450.21	449.76	449.32	448.03	448.28
26	447.57	447.14	446.13	446.58	446.17	446.30	449.52	449.99	449.84	449.29	448.06	447.62
27	447.52	447.10	446.00	446.21	446.71	446.68	449.68	449.90	449.89	449.32	448.16	447.66
28	447.59	447.08	446.17	446.16	447.00	447.17	449.44	449.90	450.04	449.14	448.17	448.06
29	447.71	446.97	446.48	445.99	------	447.56	449.56	450.05	450.15	449.12	448.16	448.07
30	447.90	446.84	446.16	446.25	------	447.72	449.68	450.04	449.63	449.32	448.20	448.19
31	448.04	------	446.02	446.58	------	447.17	------	450.11	------	449.44	448.27	------
MEAN	447.57	447.19	446.43	446.76	447.04	446.86	448.44	449.86	450.01	449.55	448.58	448.10
MAX	448.04	447.86	447.13	447.79	448.00	447.91	449.68	450.38	450.53	450.07	449.44	448.94
MIN	447.23	446.84	445.89	445.98	446.17	445.73	447.19	449.32	449.63	449.01	448.03	447.62

CAL YR 1974.....MAX 450.42 MIN 445.36
WTR YR 1975.....MAX 450.53 MIN 445.73

09427520 COLORADO RIVER BELOW PARKER DAM, ARIZ.-CALIF.

LOCATION.--Lat 34°17'44", long 114°08'22", in NW¼NW¼ sec.3, T.2 N., R.27 E., San Bernardino meridian, in California, San Bernardino County, on north end of powerplant at Parker Dam, 13 mi (21 km) northeast of Parker, Ariz., and 14 mi (23 km) upstream from Headgate Rock Dam.

DRAINAGE AREA.--178,800 mi^2 (463,100 km^2), approximately.

PERIOD OF RECORD.--February to September 1934 (gage heights and fragmentary discharge records), October 1934 to current year. Prior to October 1937, published as "near Parker, Ariz."

GAGE.--Water-stage recorder. Datum of gage is 300.54 ft (91.605 m) above mean sea level. Prior to Oct. 1, 1967, at site 3.8 mi (6.1 km) downstream at datum 346.23 ft (105.531 m) above mean sea level.

AVERAGE DISCHARGE (unadjusted).--41 years, 12,130 ft^3/s (343.5 m^3/s), 8,788,000 acre-ft/yr (10,800 hm^3/yr).

EXTREMES.--Current year: Maximum discharge, 21,800 ft^3/s (617 m^3/s) Mar. 21 (gage height, 72.58 ft or 22.122 m); minimum daily, 2,040 ft^3/s (57.8 m^3/s) Dec. 5.

Period of record: Maximum discharge, 42,400 ft^3/s (1,200 m^3/s) Feb. 8, 1937; no flow at Parker Dam for parts of several days in 1942 when gates in dam were closed; minimum daily discharge, 1,220 ft^3/s (34.6 m^3/s) Jan. 16, 1974.

An unregulated discharge of probably less than 1,350 ft^3/s (38.2 m^3/s) occurred Aug. 18, 1934 (lowest unregulated discharge since 1917 and probably since a much earlier date).

REMARKS.--Records excellent except those for January, which are good. Flow regulated by Lake Mead since Feb. 1, 1935, Lake Mohave since Jan. 17, 1950, and by Lake Havasu since July 1, 1938. Many diversions above station. For record of diversion to Colorado River aqueduct and return flows, see record for Colorado River aqueduct near Parker Dam (sta 09424150).

REVISIONS (WATER YEARS).--WSP 1313: 1941(M).

DISCHARGE, IN CUBIC FEET PER SECOND, WATER YEAR OCTOBER 1974 TO SEPTEMBER 1975

DAY	OCT	NOV	DEC	JAN	FEB	MAR	APR	MAY	JUN	JUL	AUG	SEP
1	8,480	5,290	3,930	6,860	5,480	10,400	13,800	13,100	11,600	12,400	12,800	13,000
2	7,830	5,310	3,970	6,110	6,070	10,900	13,400	13,300	12,400	11,300	12,900	13,100
3	7,370	5,600	4,270	3,650	5,670	10,800	12,900	14,000	12,000	11,300	13,000	12,600
4	8,540	5,370	3,770	2,440	5,650	10,300	14,000	14,100	11,500	12,900	13,900	11,300
5	9,690	5,180	2,040	4,630	5,420	9,930	14,500	13,900	10,800	14,000	14,100	12,200
6	9,550	4,430	2,670	5,020	6,220	9,070	14,700	13,200	10,300	14,100	13,300	12,400
7	9,010	4,530	2,800	4,750	7,280	10,100	14,500	12,600	10,500	13,700	13,400	10,700
8	8,040	5,430	4,610	5,000	7,410	11,100	14,700	12,100	11,100	12,700	14,700	9,360
9	7,070	5,430	5,100	4,980	7,680	10,200	8,170	12,800	11,100	12,600	15,000	9,670
10	6,330	5,860	5,820	5,900	7,730	9,360	7,870	13,500	11,600	12,700	14,400	9,330
11	7,100	5,990	5,390	6,130	7,450	7,640	8,420	13,400	10,200	13,800	14,400	8,100
12	6,850	5,860	5,290	6,130	7,390	7,280	9,020	13,400	10,600	14,000	14,300	10,300
13	7,160	5,400	5,270	5,940	7,390	7,230	9,550	13,900	11,500	14,200	13,000	11,000
14	7,870	4,410	5,670	5,670	7,980	9,000	11,800	13,300	11,500	14,200	13,200	11,900
15	7,710	5,160	5,860	5,900	8,240	8,830	12,700	11,700	12,000	13,700	13,200	10,900
16	7,430	4,890	5,900	5,290	8,240	9,500	14,900	13,400	12,000	13,900	13,500	11,100
17	6,400	5,270	6,140	5,710	8,370	9,650	13,900	13,100	12,400	13,700	13,700	9,980
18	7,190	5,350	5,400	5,420	8,730	11,100	14,500	13,400	11,800	14,100	12,200	9,040
19	6,990	5,580	5,380	5,580	8,880	12,400	14,400	12,900	10,600	14,400	12,500	11,200
20	7,340	4,130	5,290	5,860	8,880	12,100	15,300	12,400	11,200	14,700	11,700	11,400
21	6,570	4,170	4,530	5,330	10,200	13,700	15,000	11,800	11,100	14,400	11,200	11,400
22	4,830	4,290	2,690	5,500	10,000	14,500	15,100	11,100	11,300	13,500	11,600	11,400
23	3,930	4,690	6,400	5,350	10,800	13,900	14,700	11,600	11,900	13,500	12,300	11,500
24	3,490	4,790	7,010	7,410	8,280	14,100	14,800	12,100	12,500	12,700	12,800	10,800
25	4,370	3,190	6,530	8,450	12,100	14,400	16,000	12,200	11,500	14,800	12,700	10,900
26	4,650	2,600	6,990	7,800	12,500	13,000	16,300	11,300	12,100	15,100	12,200	10,900
27	4,910	3,050	7,170	7,640	6,920	13,100	15,200	10,800	12,800	14,200	11,400	11,200
28	4,450	3,130	7,140	6,680	8,570	13,100	14,300	10,400	13,400	13,400	11,800	10,800
29	3,650	3,510	5,230	9,020	------	12,900	13,600	10,200	13,300	13,100	12,500	10,200
30	3,110	4,270	7,780	6,530	------	14,000	13,000	11,500	13,200	11,800	13,300	10,300
31	3,170	------	7,660	6,110	------	14,300	------	11,600	------	11,200	13,600	------
TOTAL	201,080	142,160	163,700	182,790	225,530	347,890	401,030	388,100	349,800	416,100	404,600	327,980
MEAN	6,486	4,739	5,281	5,896	8,055	11,220	13,370	12,520	11,660	13,420	13,050	10,930
MAX	9,690	5,990	7,780	9,020	12,500	14,500	16,300	14,100	13,400	15,100	15,000	13,100
MIN	3,110	2,600	2,040	2,440	5,420	7,230	7,870	10,200	10,200	11,200	11,200	8,100
AC-FT	398,800	282,000	324,700	362,600	447,300	690,000	795,400	769,800	693,800	825,300	802,500	650,500

CAL YR 1974 TOTAL 3,615,170 MEAN 9,905 MAX 16,100 MIN 1,220 AC-FT 7,171,000
WTR YR 1975 TOTAL 3,550,760 MEAN 9,728 MAX 16,300 MIN 2,040 AC-FT 7,043,000

09427520 COLORADO RIVER BELOW PARKER DAM, ARIZ.-CALIF.--Continued

PERIOD OF RECORD.--Chemical analyses: October 1963 to current year.
Water temperatures: February 1954 to August 1970.
Prior to October 1968, published as 09428000.

WATER QUALITY DATA, WATER YEAR OCTOBER 1974 TO SEPTEMBER 1975

DATE	TIME	INSTANTANEOUS DISCHARGE (CFS)	DISSOLVED SILICA (SIO2) (MG/L)	DISSOLVED IRON (FE) (UG/L)	DISSOLVED CALCIUM (CA) (MG/L)	DISSOLVED MAGNESIUM (MG) (MG/L)	DISSOLVED SODIUM (NA) (MG/L)	DISSOLVED POTASSIUM (K) (MG/L)	BICARBONATE (HCO3) (MG/L)	CARBONATE (CO3) (MG/L)	DISSOLVED SULFATE (SO4) (MG/L)	DISSOLVED CHLORIDE (CL) (MG/L)
OCT.												
07...	0830	--	--	--	--	--	--	--	--	--	--	--
15...	0830	--	--	--	--	--	--	--	--	--	--	--
21...	0830	--	--	--	--	--	--	--	--	--	--	--
29...	0900	--	--	--	--	--	--	--	--	--	--	--
NOV.												
04...	0830	4550	9.1	10	82	29	100	5.7	149	--	280	86
11...	0830	--	--	--	--	--	--	--	--	--	--	--
18...	0830	--	--	--	--	--	--	--	--	--	--	--
25...	0830	--	--	--	--	--	--	--	--	--	--	--
DEC.												
02...	0830	3300	8.9	10	84	29	100	5.1	153	--	290	89
09...	0830	--	--	--	--	--	--	--	--	--	--	--
16...	0830	--	--	--	--	--	--	--	--	--	--	--
23...	0800	--	--	--	--	--	--	--	--	--	--	--
30...	0830	--	--	--	--	--	--	--	--	--	--	--
JAN.												
06...	0830	3910	8.5	10	87	29	100	5.0	156	--	310	91
13...	0830	--	--	--	--	--	--	--	--	--	--	--
20...	0830	--	--	--	--	--	--	--	--	--	--	--
27...	0830	--	--	--	--	--	--	--	--	--	--	--
FEB.												
03...	0830	4370	7.9	10	86	30	110	4.9	157	--	310	92
10...	0830	--	--	--	--	--	--	--	--	--	--	--
18...	0830	--	--	--	--	--	--	--	--	--	--	--
24...	0830	--	--	--	--	--	--	--	--	--	--	--
MAR.												
10...	0830	--	--	--	--	--	--	--	--	--	--	--
17...	0830	--	--	--	--	--	--	--	--	--	--	--
21...	1020	18100	7.8	10	84	32	110	4.8	164	--	310	90
24...	0830	--	--	--	--	--	--	--	--	--	--	--
31...	0800	18500	7.8	10	82	31	100	5.1	163	--	300	90
APR.												
07...	0800	--	--	--	--	--	--	--	--	--	--	--
14...	0830	--	--	--	--	--	--	--	--	--	--	--
21...	0830	--	--	--	--	--	--	--	--	--	--	--
28...	0830	--	--	--	--	--	--	--	--	--	--	--
MAY												
05...	0830	18560	7.4	20	87	32	100	5.3	166	0	300	90
12...	0830	--	--	--	--	--	--	--	--	--	--	--
19...	0830	--	--	--	--	--	--	--	--	--	--	--
26...	0830	--	--	--	--	--	--	--	--	--	--	--
JUNE												
02...	0830	9140	6.2	20	85	32	100	5.1	159	0	300	89
09...	0830	--	--	--	--	--	--	--	--	--	--	--
16...	0830	--	--	--	--	--	--	--	--	--	--	--
23...	0830	--	--	--	--	--	--	--	--	--	--	--
30...	0830	--	--	--	--	--	--	--	--	--	--	--
JULY												
07...	0830	8200	7.9	10	85	29	100	5.3	156	0	320	89
14...	0830	--	--	--	--	--	--	--	--	--	--	--
21...	0830	--	--	--	--	--	--	--	--	--	--	--
28...	0830	--	--	--	--	--	--	--	--	--	--	--
AUG.												
04...	0830	8570	8.6	0	84	29	100	5.8	151	0	290	88
11...	0830	--	--	--	--	--	--	--	--	--	--	--
18...	0830	--	--	--	--	--	--	--	--	--	--	--
25...	0830	--	--	--	--	--	--	--	--	--	--	--
SEP.												
02...	0830	17600	8.3	20	83	30	100	5.0	152	0	280	85
08...	0830	--	--	--	--	--	--	--	--	--	--	--
15...	0830	--	--	--	--	--	--	--	--	--	--	--
22...	0830	--	--	--	--	--	--	--	--	--	--	--
29...	0830	--	--	--	--	--	--	--	--	--	--	--

09427520 COLORADO RIVER BELOW PARKER DAM, ARIZ.-CALIF.--Continued

WATER QUALITY DATA, WATER YEAR OCTOBER 1974 TO SEPTEMBER 1975

DATE	DIS-SOLVED FLUO-RIDE (F) (MG/L)	DIS-SOLVED NITRITE PLUS NITRATE (N) (MG/L)	DIS-SOLVED SOLIDS (RESI-DUE AT 180 C) (MG/L)	DIS-SOLVED SOLIDS (SUM OF CONSTI-TUENTS) (MG/L)	DIS-SOLVED SOLIDS (TONS PER AC-FT)	HARD-NESS (CA,MG) (MG/L)	NON-CAR-BONATE HARD-NESS (MG/L)	SODIUM AD-SORP-TION RATIO	SPE-CIFIC CON-DUCT-ANCE (MICRO-MHOS)	PH (UNITS)	TEMPER-ATURE (DEG C)	DIS-SOLVED BORON (B) (UG/L)
OCT.												
07...	--	--	706	--	.96	--	--	--	1100	--	--	--
15...	--	--	698	--	.95	--	--	--	1100	--	--	--
21...	--	--	708	--	.96	--	--	--	1110	--	--	--
29...	--	--	704	--	.96	--	--	--	1110	--	--	--
NOV.												
04...	.3	.16	698	666	.95	320	200	2.4	1100	--	--	160
11...	--	--	698	--	.95	--	--	--	1100	--	--	--
18...	--	--	712	--	.97	--	--	--	1110	--	--	--
25...	--	--	702	--	.95	--	--	--	1110	--	--	--
DEC.												
02...	.3	.15	702	682	.95	330	200	2.4	1100	--	--	130
09...	--	--	702	--	.95	--	--	--	1110	--	--	--
16...	--	--	704	--	.96	--	--	--	1110	--	--	--
23...	--	--	710	--	.97	--	--	--	1110	--	--	--
30...	--	--	704	--	.96	--	--	--	1110	--	--	--
JAN.												
06...	.3	.31	704	709	.96	340	210	2.4	1110	--	--	130
13...	--	--	702	--	.95	--	--	--	1110	--	--	--
20...	--	--	702	--	.95	--	--	--	1110	--	--	--
27...	--	--	710	--	.97	--	--	--	1120	--	--	--
FEB.												
03...	.3	.15	706	719	.96	340	210	2.6	1120	--	--	140
10...	--	--	712	--	.97	--	--	--	1120	--	--	--
18...	--	--	714	--	.97	--	--	--	1120	--	--	--
24...	--	--	710	--	.97	--	--	--	1120	--	--	--
MAR.												
10...	--	--	710	--	.97	--	--	--	1120	--	--	--
17...	--	--	698	--	.95	--	--	--	1100	--	--	--
21...	.3	.14	700	720	.95	340	210	2.6	1100	--	10.5	140
24...	--	--	710	--	.97	--	--	--	1110	--	--	--
31...	.3	.17	708	697	.96	330	200	2.4	1110	--	--	130
APR.												
07...	--	--	708	--	.96	--	--	--	1110	--	--	--
14...	--	--	698	--	.95	--	--	--	1100	--	--	--
21...	--	--	712	--	.97	--	--	--	1110	--	--	--
28...	--	--	714	--	.97	--	--	--	1120	--	--	--
MAY												
05...	.4	.24	710	705	.97	350	210	2.3	1120	7.9	--	130
12...	--	--	706	--	.96	--	--	--	1110	--	--	--
19...	--	--	728	--	.99	--	--	--	1140	--	--	--
26...	--	--	708	--	.96	--	--	--	1110	--	--	--
JUNE												
02...	.4	.14	716	697	.97	340	210	2.3	1110	8.0	--	170
09...	--	--	714	--	.97	--	--	--	1120	--	--	--
16...	--	--	706	--	.96	--	--	--	1110	--	--	--
23...	--	--	702	--	.95	--	--	--	1110	--	--	--
30...	--	--	700	--	.95	--	--	--	1100	--	--	--
JULY												
07...	.4	.23	704	715	.96	330	200	2.4	1100	7.9	--	140
14...	--	--	698	--	.95	--	--	--	1090	--	--	--
21...	--	--	690	--	.94	--	--	--	1090	--	--	--
28...	--	--	694	--	.94	--	--	--	1090	--	--	--
AUG.												
04...	.3	.16	690	681	.94	330	210	2.4	1090	7.9	--	130
11...	--	--	694	--	.94	--	--	--	1090	--	--	--
18...	--	--	692	--	.94	--	--	--	1090	--	--	--
25...	--	--	692	--	.94	--	--	--	1090	--	--	--
SEP.												
02...	.4	.13	694	667	.94	330	210	2.4	1090	7.7	--	140
08...	--	--	696	--	.95	--	--	--	1100	--	--	--
15...	--	--	690	--	.94	--	--	--	1080	--	--	--
22...	--	--	698	--	.95	--	--	--	1090	--	--	--
29...	--	--	698	--	.95	--	--	--	1090	--	--	--

09429000 PALO VERDE CANAL NEAR BLYTHE, CALIF.

LOCATION.--Lat 33°43'55", long 114°30'40", in NW¼NE¼ sec.19, T.5 S., R.24 E., San Bernardino meridian, Riverside County, at canal intake structure on west side of Palo Verde Diversion Dam, 10 mi (16 km) northeast of Blythe, and 44 mi (71 km) downstream from Headgate Rock Dam.

PERIOD OF RECORD.--January 1922 to December 1923, January 1925 to current year (prior to October 1950, monthly discharge only).

GAGE.--Recording gages above and below intakes to record head. Since May 18, 1964, recorder to show gate openings. Datum of gage is: Forebay gage, at mean sea level; tailrace gage, 274.13 ft (83.555 m) above mean sea level. Aug. 7, 1950, to Nov. 30, 1952, water-stage recorder on tailrace and auxiliary recorder 0.5 mi (0.8 km) downstream and Dec. 1, 1952, to Oct. 28, 1957, recording gage above and below former intake structure 0.2 mi (0.3 km) upstream, at different datums.

AVERAGE DISCHARGE.--25 years (1950-75), 1,203 ft^3/s (34.07 m^3/s), 871,600 acre-ft/yr (1,070 hm^3/yr).

EXTREMES.--Period of record: Maximum daily discharge, 2,180 ft^3/s (61.7 m^3/s) Aug. 7, 1962; no flow at times.

REMARKS.--Records good. Daily diversions computed on basis of head on intake gates and gate openings. Records published herein represent flow diverted from Colorado River for irrigation of 91,582 acres (371 km^2) during the 1973 calendar year. Return flows to Colorado River are measured by 11 wasteways and drains extending throughout the project; 5 of these are equipped with water-stage recorder and Parshall flume, 3 are equipped with Sparling flowmeters. Return flows have not been subtracted; combined monthly return flows are given in table below.

REVISIONS (WATER YEARS).--WSP 1213: 1946-48.

DISCHARGE, IN CUBIC FEET PER SECOND, WATER YEAR OCTOBER 1974 TO SEPTEMBER 1975
MEAN VALUES

DAY	OCT	NOV	DEC	JAN	FEB	MAR	APR	MAY	JUN	JUL	AUG	SEP
1	1170	789	759	737	778	1150	1590	1860	1250	1560	1700	1570
2	1130	764	688	903	701	1020	1660	1840	1330	1630	1730	1540
3	1160	748	662	975	779	1090	1630	1790	1350	1620	1670	1690
4	1070	748	591	847	729	1230	1560	1630	1290	1460	1640	1650
5	1130	821	524	808	872	1370	1470	1750	1290	1630	1760	1660
6	982	864	526	915	872	1380	1380	1810	1250	1610	1850	1550
7	957	933	506	898	839	1450	1560	1760	1350	1650	1780	1490
8	942	986	503	898	776	1280	1540	1790	1430	1610	1730	1490
9	991	1020	628	823	771	1050	1450	1900	1320	1690	1680	1590
10	945	972	654	762	944	1120	1290	1830	1240	1770	1560	1470
11	1060	976	764	787	1000	1170	1060	1650	1270	1720	1680	1490
12	955	952	756	723	1120	1120	958	1880	1370	1820	1770	1510
13	870	887	801	825	1130	907	919	1880	1370	1700	1760	1550
14	970	971	818	829	1050	964	1120	1890	1380	1770	1840	1500
15	870	1010	658	884	997	1060	1200	1940	1240	1750	1720	1640
16	960	1010	673	873	983	908	1400	1890	1340	1720	1840	1530
17	1010	865	693	948	1180	982	1590	1850	1480	1780	1860	1320
18	898	817	827	948	1310	1210	1670	1670	1420	1840	1690	1420
19	746	813	944	851	1320	1380	1720	1730	1440	1790	1660	1420
20	717	793	1070	937	1390	1490	1670	1800	1440	1590	1680	1370
21	1040	860	954	905	1490	1490	1690	1710	1500	1700	1620	1300
22	973	804	886	878	1390	1360	1640	1730	1350	1730	1540	1460
23	630	762	906	853	1190	1180	1730	1640	1510	1750	1560	1510
24	663	744	538	852	1220	1390	1730	1620	1630	1850	1420	1410
25	570	717	363	822	1280	1540	1700	1650	1580	1820	1560	1450
26	542	724	651	820	1350	1610	1750	1600	1650	1820	1430	1460
27	555	701	662	923	1540	1630	1830	1600	1670	1630	1510	1460
28	617	645	749	957	1330	1580	1770	1660	1630	1480	1530	1220
29	671	765	704	1030	---	1520	1770	1730	1570	1630	1460	1260
30	731	785	864	1030	---	1410	1910	1590	1540	1590	1520	1380
31	817	---	830	892	---	1530	---	1430	---	1690	1580	---
TOTAL	27342	25246	22152	27133	30331	39571	45957	54100	42480	52400	51330	44360
MEAN	882	842	715	875	1083	1276	1532	1745	1416	1690	1656	1479
MAX	1170	1020	1070	1030	1540	1630	1910	1940	1670	1850	1860	1690
MIN	542	645	363	723	701	907	919	1430	1240	1460	1420	1220
AC-FT	54230	50080	43940	53820	60160	78490	91160	107300	84260	103900	101800	87990
(a)	41640	38460	35380	35240	32200	37110	37730	44370	40210	43570	45630	47240

CAL YR 1974	TOTAL	469911	MEAN	1287	MAX	1980	MIN	0	AC-FT	932100	a 473,700
WTR YR 1975	TOTAL	462402	MEAN	1267	MAX	1940	MIN	363	AC-FT	917200	a 478,800

a Return flows, in acre-feet, to Colorado River.

09429000 PALO VERDE CANAL NEAR BLYTHE, CALIF.--Continued

PERIOD OF RECORD.--Chemical analyses: March 1970 to current year.

WATER QUALITY DATA, WATER YEAR OCTOBER 1974 TO SEPTEMBER 1975

DATE	TIME	INSTANTANEOUS DISCHARGE (CFS)	DISSOLVED SILICA (SIO2) (MG/L)	DISSOLVED IRON (FE) (UG/L)	DISSOLVED CALCIUM (CA) (MG/L)	DISSOLVED MAGNESIUM (MG) (MG/L)	DISSOLVED SODIUM (NA) (MG/L)	DISSOLVED POTASSIUM (K) (MG/L)	BICARBONATE (HCO3) (MG/L)	CARBONATE (CO3) (MG/L)	DISSOLVED SULFATE (SO4) (MG/L)	DISSOLVED CHLORIDE (CL) (MG/L)
OCT.												
07...	0730	--	--	--	--	--	--	--	--	--	--	--
15...	0735	--	--	--	--	--	--	--	--	--	--	--
21...	0725	--	--	--	--	--	--	--	--	--	--	--
29...	0720	--	--	--	--	--	--	--	--	--	--	--
NOV.												
04...	0810	8130	9.6	20	88	29	110	5.8	158	--	290	94
11...	0700	--	--	--	--	--	--	--	--	--	--	--
18...	0655	--	--	--	--	--	--	--	--	--	--	--
25...	0710	--	--	--	--	--	--	--	--	--	--	--
DEC.												
02...	0730	695	9.3	20	88	29	110	5.3	161	--	310	96
09...	0710	--	--	--	--	--	--	--	--	--	--	--
16...	0730	--	--	--	--	--	--	--	--	--	--	--
23...	0700	--	--	--	--	--	--	--	--	--	--	--
30...	0710	984	9.7	10	90	32	110	5.1	165	--	320	110
JAN.												
06...	0710	--	--	--	--	--	--	--	--	--	--	--
20...	0710	--	--	--	--	--	--	--	--	--	--	--
27...	0710	--	--	--	--	--	--	--	--	--	--	--
FEB.												
03...	0720	752	8.8	20	85	32	110	4.9	158	--	320	96
10...	1410	--	--	--	--	--	--	--	--	--	--	--
18...	0705	--	--	--	--	--	--	--	--	--	--	--
24...	0710	--	--	--	--	--	--	--	--	--	--	--
MAR.												
03...	0710	1090	7.7	10	94	30	130	6.5	161	--	310	130
10...	0700	--	--	--	--	--	--	--	--	--	--	--
17...	0705	--	--	--	--	--	--	--	--	--	--	--
24...	0710	--	--	--	--	--	--	--	--	--	--	--
31...	1000	1530	7.8	10	86	31	100	5.1	165	--	300	91
APR.												
07...	--	--	--	--	--	--	--	--	--	--	--	--
14...	0710	--	--	--	--	--	--	--	--	--	--	--
21...	0710	--	--	--	--	--	--	--	--	--	--	--
28...	0710	--	--	--	--	--	--	--	--	--	--	--
MAY												
05...	0715	1770	6.8	20	87	28	110	5.2	163	0	300	90
12...	0710	--	--	--	--	--	--	--	--	--	--	--
19...	0710	--	--	--	--	--	--	--	--	--	--	--
27...	1345	--	--	--	--	--	--	--	--	--	--	--
JUNE												
02...	0745	1390	5.5	10	82	33	110	5.3	155	0	310	92
09...	0735	--	--	--	--	--	--	--	--	--	--	--
16...	0740	--	--	--	--	--	--	--	--	--	--	--
23...	0755	--	--	--	--	--	--	--	--	--	--	--
30...	0730	1500	7.3	10	69	31	110	5.3	155	0	300	90
JULY												
07...	0725	--	--	--	--	--	--	--	--	--	--	--
14...	0715	--	--	--	--	--	--	--	--	--	--	--
21...	0745	--	--	--	--	--	--	--	--	--	--	--
28...	0740	--	--	--	--	--	--	--	--	--	--	--
AUG.												
04...	0730	1720	8.2	0	83	30	110	5.8	149	0	300	92
18...	0735	--	--	--	--	--	--	--	--	--	--	--
25...	0745	--	--	--	--	--	--	--	--	--	--	--
SEP.												
02...	1345	1540	8.4	10	86	33	120	5.2	146	0	350	100
08...	0710	--	--	--	--	--	--	--	--	--	--	--
15...	0740	--	--	--	--	--	--	--	--	--	--	--
22...	0735	--	--	--	--	--	--	--	--	--	--	--
29...	0755	--	--	--	--	--	--	--	--	--	--	--

09429000 PALO VERDE CANAL NEAR BLYTHE, CALIF.--Continued

WATER QUALITY DATA, WATER YEAR OCTOBER 1974 TO SEPTEMBER 1975

DATE	DIS-SOLVED FLUO-RIDE (F) (MG/L)	DIS-SOLVED NITRITE PLUS NITRATE (N) (MG/L)	DIS-SOLVED SOLIDS (RESI-DUE AT 180 C) (MG/L)	DIS-SOLVED SOLIDS (SUM OF CONSTI-TUENTS) (MG/L)	DIS-SOLVED SOLIDS (TONS PER AC-FT)	HARD-NESS (CA,MG) (MG/L)	NON-CAR-BONATE HARD-NESS (MG/L)	SODIUM AD-SORP-TION RATIO	SPE-CIFIC CON-DUCT-ANCE (MICRO-MHOS)	PH (UNITS)	TEMPER-ATURE (DEG C)	DIS-SOLVED BORON (B) (UG/L)
OCT.												
07...	--	--	808	--	1.10	--	--	--	1230	--	24.0	--
15...	--	--	842	--	1.15	--	--	--	1310	--	22.0	--
21...	--	--	774	--	1.05	--	--	--	1200	--	22.0	--
29...	--	--	738	--	1.00	--	--	--	1160	--	16.5	--
NOV.												
04...	.4	.25	744	706	1.01	340	210	2.6	1170	--	16.5	190
11...	--	--	762	--	1.04	--	--	--	1200	--	16.0	--
18...	--	--	744	--	1.01	--	--	--	1160	--	15.5	--
25...	--	--	764	--	1.04	--	--	--	1200	--	16.5	--
DEC.												
02...	.3	.18	738	728	1.00	340	210	2.6	1170	--	14.0	130
09...	--	--	748	--	1.02	--	--	--	1180	--	14.0	--
16...	--	--	786	--	1.07	--	--	--	1220	--	12.0	--
23...	--	--	744	--	1.01	--	--	--	1170	--	12.0	--
30...	.3	.37	750	759	1.02	360	230	2.5	1190	--	11.5	150
JAN.												
06...	--	--	784	--	1.07	--	--	--	1240	--	12.0	--
20...	--	--	754	--	1.03	--	--	--	1190	--	11.5	--
27...	--	--	734	--	1.00	--	--	--	1160	--	11.0	--
FEB.												
03...	.4	.49	732	737	1.00	340	210	2.6	1160	--	10.5	110
10...	--	--	728	--	.99	--	--	--	1150	--	14.0	--
18...	--	--	724	--	.98	--	--	--	1130	--	10.5	--
24...	--	--	954	--	1.30	--	--	--	1490	--	10.5	--
MAR.												
03...	.5	.63	802	791	1.09	360	230	3.0	1250	--	10.0	130
10...	--	--	762	--	1.04	--	--	--	1190	--	9.0	--
17...	--	--	820	--	1.12	--	--	--	1290	--	10.0	--
24...	--	--	790	--	1.07	--	--	--	1230	--	13.0	--
31...	.3	.20	710	703	.97	340	210	2.4	1120	--	12.0	140
APR.												
07...	--	--	712	--	.97	--	--	--	1120	--	12.0	--
14...	--	--	744	--	1.01	--	--	--	1160	--	15.5	--
21...	--	--	726	--	.99	--	--	--	1120	--	16.0	--
28...	--	--	732	--	1.00	--	--	--	1140	--	17.0	--
MAY												
05...	.4	.12	714	708	.97	330	200	2.6	1130	8.0	16.5	130
12...	--	--	720	--	.98	--	--	--	1130	--	18.5	--
19...	--	--	738	--	1.00	--	--	--	1160	--	20.0	--
27...	--	--	718	--	.98	--	--	--	1130	--	21.0	--
JUNE												
02...	.4	.08	714	715	.97	340	210	2.6	1120	8.2	22.0	140
09...	--	--	758	--	1.03	--	--	--	1180	--	22.0	--
16...	--	--	720	--	.98	--	--	--	1140	--	24.0	--
23...	--	--	748	--	1.02	--	--	--	1180	--	24.5	--
30...	.4	.13	710	690	.97	300	170	2.8	1120	8.0	24.0	150
JULY												
07...	--	--	700	--	.95	--	--	--	1100	--	24.5	--
14...	--	--	692	--	.94	--	--	--	1090	--	25.0	--
21...	--	--	724	--	.98	--	--	--	1130	--	25.5	--
28...	--	--	704	--	.96	--	--	--	1110	--	26.5	--
AUG.												
04...	.3	.36	708	704	.96	330	210	2.6	1110	8.0	26.0	130
18...	--	--	744	--	1.01	--	--	--	1160	--	26.0	--
25...	--	--	706	--	.96	--	--	--	1110	--	25.5	--
SEP.												
02...	.4	.11	742	776	1.01	350	230	2.8	1170	7.9	26.0	150
08...	--	--	706	--	.96	--	--	--	1110	--	24.5	--
15...	--	--	706	--	.96	--	--	--	1110	--	24.5	--
22...	--	--	800	--	1.09	--	--	--	1270	--	23.5	--
29...	--	--	778	--	1.06	--	--	--	1210	--	23.5	--

09429010 COLORADO RIVER AT PALO VERDE DAM, ARIZ.-CALIF.

LOCATION.--Lat 33°43'55", long 114°30'40", in NW¼NE¼ sec.19, T.5 S., R.24 E., San Bernardino meridian, in California, Riverside County, on west side of Palo Verde Diversion Dam, 10 mi (16 km) northeast of Blythe, Calif., and 44 mi (71 km) downstream from Headgate Rock Dam.

DRAINAGE AREA.--182,200 mi^2 (471,900 km^2), approximately.

PERIOD OF RECORD.--April 1969 to current year. If records (available in files of Tucson district office) for the two Colorado River Indian Reservation drains entering below Palo Verde Dam are added to records for this station, records equivalent to those published 1956-69 as Colorado River below Palo Verde Dam can be obtained.

GAGE.--Two water-stage recorders, one above and one below dam, to record head on gates, and water-stage recorder to record gate opening. Supplementary water-stage recorder above dam operated by Geological Survey and supplementary water-stage recorder below dam operated by Palo Verde Irrigation District. Datum of gages is at mean sea level.

AVERAGE DISCHARGE.--6 years, 7,340 ft^3/s (207.9 m^3/s), 5,318,000 acre-ft/yr (6,560 hm^3/yr).

EXTREMES.--Current year: Maximum daily discharge, 12,200 ft^3/s (346 m^3/s) Apr. 26; minimum daily, 1,910 ft^3/s (54.1 m^3/s) Dec. 6.
Period of record: Maximum daily discharge, 13,200 ft^3/s (374 m^3/s) Apr. 8, 1970; minimum daily, 1,060 ft^3/s (30.0 m^3/s) Nov. 24, 1972.

REMARKS.--Records excellent. Record does not include diversion to Palo Verde Canal. (See elsewhere in this report.) Daily discharge computed from relation between discharge, head, and gate openings. Many diversions above station for irrigation, municipal, and industrial uses. Flow regulated by Lake Mead, Lake Mohave, and Lake Havasu.

DISCHARGE, IN CUBIC FEET PER SECOND, WATER YEAR OCTOBER 1974 TO SEPTEMBER 1975

DAY	OCT	NOV	DEC	JAN	FEB	MAR	APR	MAY	JUN	JUL	AUG	SEP
1	7720	2780	3240	5810	4630	7030	10900	9680	9010	9510	7540	10600
2	6820	4300	3120	5580	4200	8350	10500	9760	9410	8510	9360	10300
3	6210	4450	3090	4770	4700	8780	9980	10200	9560	7930	9950	9700
4	5790	4800	3720	4790	4410	8260	10300	10500	9360	8800	9750	9100
5	6990	4690	2710	3180	4430	7930	10800	11200	8580	10100	10600	8370
6	7950	4420	1910	4030	4180	7510	11600	10600	8240	11000	10400	9110
7	7790	3360	2220	4480	5070	6810	11000	9740	7730	11000	9240	9860
8	7410	3510	2760	4320	6030	7670	11000	9570	8150	10200	10800	7900
9	6350	4290	3300	4400	6130	9140	11400	9050	8420	9790	11500	7210
10	5690	4380	4500	4480	6180	8010	5210	9680	8590	9520	11300	7340
11	4890	4950	4640	5330	5950	7090	5970	10200	8670	9790	11200	7010
12	5520	4940	4240	5630	5820	5820	6650	10100	7600	10300	11500	6200
13	5560	4820	4540	5460	5780	5910	7180	10200	8020	10400	9990	8150
14	5630	4430	4340	5850	5970	6120	7500	10200	8590	10900	9980	8920
15	6490	3530	4750	5490	6630	6880	9360	9240	8930	10600	10100	9140
16	6010	4090	4820	4930	6810	7520	9630	9630	9110	10400	10300	8620
17	5620	4180	4770	4620	6490	7910	11300	9760	9090	10200	10400	8780
18	5100	4370	4770	4630	6620	8370	10300	9730	9190	10200	10400	7880
19	5830	4530	4120	4880	6800	8330	10800	9690	8600	10500	9070	7210
20	5780	4690	3820	4900	6830	9240	11000	9370	8020	10900	9240	8610
21	5620	3280	3710	5150	6620	9470	12000	9280	8310	10800	8810	8900
22	5190	3340	3300	4620	8030	12100	11500	8070	8350	10600	8580	9040
23	4220	3550	2020	4670	8430	11400	11600	8380	8480	10100	8810	9450
24	3100	3780	4970	5290	8990	11100	10500	8460	8740	9490	9480	8910
25	3280	3670	5660	4970	7200	11900	12000	9380	8680	9570	9760	8600
26	3850	2500	5700	6810	11300	10500	12200	8820	8400	11700	9650	8430
27	4040	2190	5700	6570	7050	9680	12100	8320	9310	10900	9000	8420
28	4140	2660	5590	6420	5300	10400	11500	7490	9870	10600	8800	9160
29	3600	2580	5190	6680	---	10200	10300	7730	10000	9980	9200	8940
30	2650	2970	3950	5150	---	10400	9770	7610	10000	9950	9900	7910
31	2710	---	6120	5270	---	11400	---	8740	---	8480	10200	---
TOTAL	167550	116030	127290	159160	176580	271230	306050	290380	263010	312720	304810	257770
MEAN	5405	3868	4106	5134	6306	8749	10200	9367	8767	10090	9833	8592
MAX	7950	4950	6120	6810	11300	12100	12200	11200	10000	11700	11500	10600
MIN	2650	2190	1910	3180	4180	5820	5210	7490	7600	7930	7540	6200
AC-FT	332300	230100	252500	315700	350200	538000	607100	576000	521700	620300	604600	511300

CAL YR 1974 TOTAL 2808330 MEAN 7694 MAX 12800 MIN 1240 AC-FT 5570000
WTR YR 1975 TOTAL 2752580 MEAN 7541 MAX 12200 MIN 1910 AC-FT 5460000

09429130 PALO VERDE IRRIGATION DISTRICT OLIVE LAKE DRAIN NEAR BLYTHE, CALIF.

LOCATION.--Lat 33°40'36", long 114°32'09", in SW¼SW¼ sec.1, T.6 S., R.23 E., San Bernardino meridian, Riverside County, 0.5 mi (0.5 km) upstream from mouth, and 5 mi (8 km) northeast of Blythe.

PERIOD OF RECORD.--Chemical analyses: October 1968 to September 1970 (partial-record station), October 1970 to current year.

REMARKS.--Unpublished miscellaneous chemical analyses for water years 1962-68 available in district office at Tucson, Ariz.

WATER QUALITY DATA, WATER YEAR OCTOBER 1974 TO SEPTEMBER 1975

DATE	TIME	INSTANTANEOUS DISCHARGE (CFS)	DISSOLVED SILICA (SIO2) (MG/L)	DISSOLVED IRON (FE) (UG/L)	DISSOLVED CALCIUM (CA) (MG/L)	DISSOLVED MAGNESIUM (MG) (MG/L)	DISSOLVED SODIUM (NA) (MG/L)	DISSOLVED POTASSIUM (K) (MG/L)	BICARBONATE (HCO3) (MG/L)	CARBONATE (CO3) (MG/L)	DISSOLVED SULFATE (SO4) (MG/L)	DISSOLVED CHLORIDE (CL) (MG/L)
OCT.												
01...	0830	18	19	10	150	44	140	6.5	301	--	410	140
NOV.												
01...	0905	14	18	20	130	48	150	6.3	292	--	420	130
DEC.												
02...	0825	10	16	10	130	38	140	5.8	257	--	380	120
JAN.												
01...	1100	7.0	19	10	150	45	160	6.1	318	--	440	160
FEB.												
03...	1010	7.0	17	10	140	47	160	6.4	304	--	430	140
MAR.												
03...	0830	6.0	15	20	140	46	150	6.4	294	--	430	140
APR.												
02...	0900	8.0	15	10	140	42	140	7.2	290	--	410	130
MAY												
01...	0940	11	16	10	140	41	150	5.7	297	0	370	140
JUNE												
02...	0730	12	12	40	130	37	140	5.8	256	0	380	120
JULY												
01...	0945	12	14	0	110	38	140	5.7	244	0	380	120
SEP.												
02...	0840	12	14	20	120	38	140	6.2	236	0	390	110

DATE	DISSOLVED FLUORIDE (F) (MG/L)	DISSOLVED NITRITE PLUS NITRATE (N) (MG/L)	DISSOLVED SOLIDS (RESIDUE AT 180 C) (MG/L)	DISSOLVED SOLIDS (SUM OF CONSTITUENTS) (MG/L)	DISSOLVED SOLIDS (TONS PER AC-FT)	HARDNESS (CA,MG) (MG/L)	NONCARBONATE HARDNESS (MG/L)	SODIUM ADSORPTION RATIO	SPECIFIC CONDUCTANCE (MICROMHOS)	PH (UNITS)	TEMPERATURE (DEG C)	DISSOLVED BORON (B) (UG/L)
OCT.												
01...	.3	1.9	1080	1070	1.47	560	310	2.6	1650	--	20.0	100
NOV.												
01...	.4	.29	1110	1050	1.51	520	280	2.9	1630	--	19.0	220
DEC.												
02...	.3	.28	1020	958	1.39	480	270	2.8	1500	--	14.0	190
JAN.												
01...	.3	.37	1090	1140	1.48	560	300	2.9	1710	--	13.5	200
FEB.												
03...	.3	.28	1090	1090	1.48	540	290	3.0	1640	--	13.0	170
MAR.												
03...	.4	.19	1080	1070	1.47	540	300	2.8	1600	--	14.5	190
APR.												
02...	.3	.20	1110	1030	1.51	520	280	2.7	1590	--	14.5	230
MAY												
01...	.4	.25	1090	1010	1.48	520	280	2.9	1610	7.7	19.5	200
JUNE												
02...	.3	.16	1000	952	1.36	480	270	2.8	1460	7.5	22.0	140
JULY												
01...	.4	.14	946	929	1.29	430	230	2.9	1450	7.8	22.5	160
SEP.												
02...	.4	.18	988	936	1.34	460	260	2.9	1340	7.6	25.0	180

09429220 PALO VERDE IRRIGATION DISTRICT OUTFALL DRAIN NEAR PALO VERDE, CALIF.

LOCATION.--Lat 33°21'41", long 114°43'20", in SE¼SE¼ sec.26, T.9 S., R.21 E., San Bernardino meridian, Imperial County, at gaging station, at State Highway 78 bridge, 3.3 mi (5.3 km) upstream from mouth, and 5 mi (8 km) south of Palo Verde.

PERIOD OF RECORD.--Chemical analyses: October 1968 to current year.

REMARKS.--Unpublished miscellaneous chemical analyses for water years 1962-68 available in district office at Tucson, Ariz.

WATER QUALITY DATA, WATER YEAR OCTOBER 1974 TO SEPTEMBER 1975

DATE	TIME	INSTANTANEOUS DISCHARGE (CFS)	DISSOLVED SILICA (SIO2) (MG/L)	DISSOLVED IRON (FE) (UG/L)	DISSOLVED CALCIUM (CA) (MG/L)	DISSOLVED MAGNESIUM (MG) (MG/L)	DISSOLVED SODIUM (NA) (MG/L)	DISSOLVED POTASSIUM (K) (MG/L)	BICARBONATE (HCO3) (MG/L)	CARBONATE (CO3) (MG/L)	DISSOLVED SULFATE (SO4) (MG/L)	DISSOLVED CHLORIDE (CL) (MG/L)
OCT.												
07...	1310	--	--	--	--	--	--	--	--	--	--	--
15...	1250	--	--	--	--	--	--	--	--	--	--	--
21...	1245	--	--	--	--	--	--	--	--	--	--	--
29...	1300	--	--	--	--	--	--	--	--	--	--	--
NOV.												
04...	1300	507	22	20	150	50	400	7.2	328	--	570	410
11...	1215	--	--	--	--	--	--	--	--	--	--	--
18...	1245	--	--	--	--	--	--	--	--	--	--	--
25...	1245	--	--	--	--	--	--	--	--	--	--	--
DEC.												
02...	1245	542	20	10	130	41	340	6.2	306	--	510	340
09...	1230	--	--	--	--	--	--	--	--	--	--	--
16...	1315	--	--	--	--	--	--	--	--	--	--	--
23...	1300	--	--	--	--	--	--	--	--	--	--	--
30...	1300	524	21	10	140	46	410	6.6	315	--	570	420
JAN.												
06...	1320	--	--	--	--	--	--	--	--	--	--	--
20...	1300	--	--	--	--	--	--	--	--	--	--	--
27...	1310	--	--	--	--	--	--	--	--	--	--	--
FEB.												
03...	1320	472	18	10	130	44	430	6.2	306	--	590	430
10...	0800	--	--	--	--	--	--	--	--	--	--	--
18...	1310	--	--	--	--	--	--	--	--	--	--	--
24...	1300	--	--	--	--	--	--	--	--	--	--	--
MAR.												
03...	1310	551	18	10	140	42	370	7.1	300	--	550	360
10...	1330	--	--	--	--	--	--	--	--	--	--	--
17...	1315	--	--	--	--	--	--	--	--	--	--	--
24...	1320	--	--	--	--	--	--	--	--	--	--	--
31...	1330	584	18	10	130	44	370	6.7	300	--	560	380
APR.												
07...	1135	--	--	--	--	--	--	--	--	--	--	--
14...	1315	--	--	--	--	--	--	--	--	--	--	--
21...	1315	--	--	--	--	--	--	--	--	--	--	--
28...	1310	--	--	--	--	--	--	--	--	--	--	--
MAY												
05...	1320	640	17	30	120	43	400	6.8	267	0	580	390
12...	1330	--	--	--	--	--	--	--	--	--	--	--
19...	1300	--	--	--	--	--	--	--	--	--	--	--
27...	1100	--	--	--	--	--	--	--	--	--	--	--
JUNE												
02...	1400	675	18	10	120	42	380	6.8	268	0	570	370
09...	1330	--	--	--	--	--	--	--	--	--	--	--
16...	1345	--	--	--	--	--	--	--	--	--	--	--
23...	1400	--	--	--	--	--	--	--	--	--	--	--
30...	1300	626	21	0	120	46	410	7.2	302	0	590	370
JULY												
07...	1315	--	--	--	--	--	--	--	--	--	--	--
14...	1340	--	--	--	--	--	--	--	--	--	--	--
21...	1345	--	--	--	--	--	--	--	--	--	--	--
28...	1240	--	--	--	--	--	--	--	--	--	--	--
AUG.												
04...	1410	680	20	0	130	46	390	7.6	284	0	570	380
11...	1400	--	--	--	--	--	--	--	--	--	--	--
18...	1400	--	--	--	--	--	--	--	--	--	--	--
25...	1345	--	--	--	--	--	--	--	--	--	--	--
SEP.												
02...	0910	668	21	0	140	46	410	6.5	315	0	620	390
08...	1320	--	--	--	--	--	--	--	--	--	--	--
15...	1330	--	--	--	--	--	--	--	--	--	--	--
22...	1330	--	--	--	--	--	--	--	--	--	--	--
29...	1350	--	--	--	--	--	--	--	--	--	--	--

09429220 PALO VERDE IRRIGATION DISTRICT OUTFALL DRAIN NEAR PALO VERDE, CALIF.--Continued

WATER QUALITY DATA, WATER YEAR OCTOBER 1974 TO SEPTEMBER 1975

DATE	DIS-SOLVED FLUO-RIDE (F) (MG/L)	DIS-SOLVED NITRITE PLUS NITRATE (N) (MG/L)	DIS-SOLVED SOLIDS (RESI-DUE AT 180 C) (MG/L)	DIS-SOLVED SOLIDS (SUM OF CONSTI-TUENTS) (MG/L)	DIS-SOLVED SOLIDS (TONS PER AC-FT)	HARD-NESS (CA,MG) (MG/L)	NON-CAR-BONATE HARD-NESS (MG/L)	SODIUM AD-SORP-TION RATIO	SPE-CIFIC CON-DUCT-ANCE (MICRO-MHOS)	PH (UNITS)	TEMPER-ATURE (DEG C)	DIS-SOLVED BORON (B) (UG/L)
OCT.												
07...	--	--	1550	--	2.11	--	--	--	2440	--	25.5	--
15...	--	--	1630	--	2.22	--	--	--	2590	--	24.0	--
21...	--	--	1690	--	2.30	--	--	--	2680	--	23.5	--
29...	--	--	1690	--	2.30	--	--	--	2680	--	19.0	--
NOV.												
04...	1.2	.54	1820	1780	2.48	580	310	7.2	2750	--	19.5	570
11...	--	--	1700	--	2.31	--	--	--	2690	--	18.0	--
18...	--	--	1660	--	2.26	--	--	--	2610	--	18.5	--
25...	--	--	1550	--	2.11	--	--	--	2420	--	16.0	--
DEC.												
02...	.9	.43	1610	1540	2.19	490	240	6.7	2480	--	15.0	440
09...	--	--	1840	--	2.50	--	--	--	2880	--	15.5	--
16...	--	--	1620	--	2.20	--	--	--	2540	--	14.5	--
23...	--	--	1850	--	2.52	--	--	--	2870	--	15.0	--
30...	1.0	.59	1780	1770	2.42	540	280	7.7	2770	--	14.5	540
JAN.												
06...	--	--	1670	--	2.27	--	--	--	2630	--	13.5	--
20...	--	--	1730	--	2.35	--	--	--	2660	--	14.0	--
27...	--	--	1960	--	2.67	--	--	--	2960	--	14.5	--
FEB.												
03...	1.1	.53	1790	1800	2.43	510	250	8.3	2840	--	13.0	610
10...	--	--	1730	--	2.35	--	--	--	2740	--	15.0	--
18...	--	--	1820	--	2.48	--	--	--	2900	--	14.0	--
24...	--	--	1750	--	2.38	--	--	--	2750	--	14.0	--
MAR.												
03...	1.1	1.2	1680	1640	2.28	520	280	7.0	2580	--	14.5	400
10...	--	--	1710	--	2.33	--	--	--	2660	--	13.0	--
17...	--	--	1820	--	2.48	--	--	--	2850	--	12.0	--
24...	--	--	1600	--	2.18	--	--	--	2520	--	15.5	--
31...	1.0	.65	1690	1660	2.30	510	260	7.2	2640	--	13.5	570
APR.												
07...	--	--	1700	--	2.31	--	--	--	2680	--	17.0	--
14...	--	--	1820	--	2.48	--	--	--	2870	--	19.0	--
21...	--	--	1780	--	2.42	--	--	--	2820	--	19.0	--
28...	--	--	1790	--	2.43	--	--	--	2750	--	20.5	--
MAY												
05...	1.2	.04	1750	1690	2.38	480	260	8.0	2720	7.8	20.5	540
12...	--	--	1770	--	2.41	--	--	--	2760	--	23.5	--
19...	--	--	1720	--	2.34	--	--	--	2710	--	23.5	--
27...	--	--	1660	--	2.26	--	--	--	2580	--	23.5	--
JUNE												
02...	1.2	.01	1690	1640	2.30	470	250	7.6	2580	7.8	26.5	560
09...	--	--	1560	--	2.12	--	--	--	2480	--	26.5	--
16...	--	--	1690	--	2.30	--	--	--	2670	--	26.0	--
23...	--	--	1550	--	2.11	--	--	--	2430	--	26.0	--
30...	1.2	.29	1680	1720	2.28	490	240	8.1	2650	7.8	26.5	570
JULY												
07...	--	--	1680	--	2.28	--	--	--	2620	--	27.0	--
14...	--	--	1700	--	2.31	--	--	--	2640	--	27.0	--
21...	--	--	1700	--	2.31	--	--	--	2620	--	28.0	--
28...	--	--	1690	--	2.30	--	--	--	2610	--	28.5	--
AUG.												
04...	1.0	.35	1680	1690	2.28	510	280	7.5	2650	8.0	28.5	550
11...	--	--	1580	--	2.15	--	--	--	2460	--	28.5	--
18...	--	--	1690	--	2.30	--	--	--	2620	--	28.5	--
25...	--	--	1660	--	2.26	--	--	--	2620	--	28.0	--
SEP.												
02...	1.3	.65	1750	1790	2.38	540	280	7.7	2740	8.0	28.0	550
08...	--	--	1700	--	2.31	--	--	--	2620	--	26.5	--
15...	--	--	1640	--	2.23	--	--	--	2550	--	26.0	--
22...	--	--	1620	--	2.20	--	--	--	2550	--	25.5	--
29...	--	--	1550	--	2.11	--	--	--	2390	--	25.0	--

09429225. PALO VERDE IRRIGATION DISTRICT ANDERSON DRAIN NEAR PALO VERDE, CALIF.

LOCATION.--Lat 33°21'19", long 114°43'00", in SW¼ sec.36, T.9 S., R.21 E., San Bernardino meridian, Imperial County, 0.1 mi (0.2 km) upstream from pump into Outfall drain, and 5.5 mi (8.8 km) south of Palo Verde.

PERIOD OF RECORD.--Chemical analyses: Water year 1969 (partial-record station), October 1969 to current year.

REMARKS.--Unpublished miscellaneous chemical analyses for water years 1966-68 available in district office at Tucson, Ariz.

WATER QUALITY DATA, WATER YEAR OCTOBER 1974 TO SEPTEMBER 1975

DATE	TIME	INSTANTANEOUS DISCHARGE (CFS)	DISSOLVED SILICA (SIO2) (MG/L)	DISSOLVED IRON (FE) (UG/L)	DISSOLVED CALCIUM (CA) (MG/L)	DISSOLVED MAGNESIUM (MG) (MG/L)	DISSOLVED SODIUM (NA) (MG/L)	DISSOLVED POTASSIUM (K) (MG/L)	BICARBONATE (HCO3) (MG/L)	CARBONATE (CO3) (MG/L)	DISSOLVED SULFATE (SO4) (MG/L)	DISSOLVED CHLORIDE (CL) (MG/L)
OCT.												
02...	0815	2.2	30	20	120	58	670	9.4	563	--	790	480
NOV.												
01...	1725	1.6	25	50	61	28	570	5.7	532	--	590	320
DEC.												
02...	1315	1.2	23	140	42	21	630	3.6	554	--	600	350
JAN.												
01...	1115	.00	24	130	47	20	620	4.7	537	--	620	370
FEB.												
03...	1235	1.2	23	150	41	22	680	4.7	554	--	670	370
MAR.												
03...	1210	1.2	22	240	63	29	510	8.7	558	--	580	260
APR.												
01...	1000	8.0	22	210	54	23	550	5.7	519	--	620	290
MAY												
01...	1100	1.6	19	10	110	43	380	5.7	452	0	520	250
JUNE												
02...	1500	1.6	23	400	42	20	630	3.6	541	0	660	310
JULY												
01...	1115	1.2	25	260	42	21	650	3.7	549	0	670	350
AUG.												
01...	1400	1.6	23	160	62	27	570	6.2	529	0	620	300
SEP.												
02...	1500	1.1	23	10	43	21	570	3.9	502	0	610	290

DATE	DISSOLVED FLUORIDE (F) (MG/L)	DISSOLVED NITRITE PLUS NITRATE (N) (MG/L)	DISSOLVED SOLIDS (RESIDUE AT 180 C) (MG/L)	DISSOLVED SOLIDS (SUM OF CONSTITUENTS) (MG/L)	DISSOLVED SOLIDS (TONS PER AC-FT)	HARDNESS (CA,MG) (MG/L)	NONCARBONATE HARDNESS (MG/L)	SODIUM ADSORPTION RATIO	SPECIFIC CONDUCTANCE (MICROMHOS)	PH (UNITS)	TEMPERATURE (DEG C)	DISSOLVED BORON (B) (UG/L)
OCT.												
02...	1.1	.23	2450	2440	3.33	540	78	13	3710	--	25.0	840
NOV.												
01...	2.1	.06	1950	1870	2.65	270	0	15	3020	--	18.0	970
DEC.												
02...	2.6	2.2	2000	1960	2.72	190	0	20	3070	--	18.5	1100
JAN.												
01...	2.7	.43	2000	1980	2.72	200	0	19	3060	--	15.0	1000
FEB.												
03...	2.9	.08	2060	2090	2.80	190	0	21	3180	--	14.0	1300
MAR.												
03...	1.6	.05	1750	1750	2.38	280	0	13	2720	--	18.5	860
APR.												
01...	1.0	.04	1840	1820	2.50	230	0	16	2870	--	16.0	990
MAY												
01...	1.2	.05	1670	1550	2.27	450	79	7.8	2490	7.7	19.0	580
JUNE												
02...	2.4	.07	1970	1960	2.68	190	0	20	3060	8.0	25.0	1100
JULY												
01...	2.7	.04	1990	2040	2.71	190	0	20	3100	8.0	24.0	1100
AUG.												
01...	2.1	.11	1880	1870	2.56	270	0	15	2910	7.9	27.0	920
SEP.												
02...	2.3	.06	1860	1810	2.53	190	0	18	2800	8.1	27.0	930

09429490 COLORADO RIVER ABOVE IMPERIAL DAM, ARIZ.-CALIF.

(National stream-quality accounting, pesticide, radiochemical, and tritium network station)

LOCATION.--Lat 32°52'59", long 114°27'55", at Imperial Dam. The Arizona end of the dam is in SW¼NW¼ sec.30, T.6 S., R.21 W., Gila and Salt River meridian; the California end is in NW¼SW¼ sec.9, T.15 S., R.24 E., San Bernardino meridian. Imperial Dam is 5 mi (8 km) upstream from Laguna Dam, 15 mi (24 km) northeast of Yuma, Ariz., 90 mi (145 km) downstream from Palo Verde Dam, and 147 mi (237 km) downstream from Parker Dam.

DRAINAGE AREA.--184,600 mi^2 (478,100 km^2), approximately.

PERIOD OF RECORD.--1903-34 (yearly discharge only, published in WSP 1313), July 1934 to current year (monthly discharge only since October 1942). Prior to October 1942 published as "near Picacho, Calif." October 1942 to September 1971 published as "at Imperial Dam" (monthly discharge shown as "flow reaching Imperial Dam," listed as supplement to "flow passing Imperial Dam").

GAGE.--None. This record is synthesized from records of several other stations (see REMARKS). July 13, 1934, to Sept. 30, 1942, water-stage recorder at site 14.5 mi (23.3 km) upstream at datum 167.38 ft (51.017 m) above mean sea level.

AVERAGE DISCHARGE.--41 years (1934-75), 11,180 ft^3/s (316.6 m^3/s), 8,100,000 acre-ft/yr (9,990 hm^3/yr).

EXTREMES.--1934 to current year: Maximum discharge, 40,800 ft^3/s (1,160 m^3/s) Sept. 5, 1939; minimum, 538 ft^3/s (15.2 m^3/s) Aug. 3, 1934; minimum daily since regulation of Hoover Dam began, 1,450 ft^3/s (41.1 m^3/s) Feb. 17, 1935.

REMARKS.--Records show flow of Colorado River reaching Imperial Dam, and are based on combined monthly total flow of Colorado River below Imperial Dam (sta 09429500), All-American Canal near Imperial Dam (sta 09523000), Gila Gravity Main Canal at Imperial Dam (sta 09522500), and diversions to Mittry Lake. Records for 1903-34 and for October 1942 to September 1960 were computed as combined flow of Colorado River at Yuma (sta 09521000) and the canals diverting at Imperial and Laguna Dams, less the flow of Gila River near Dome (sta 09520500); for some of these periods drainage and waste return flows and channel losses between the gaging stations and Imperial Dam were considered, and for other periods they were neglected. Records for July 1934 to September 1942 show daily discharge of Colorado River at gaging station near Picacho, Calif.

Natural flow of Colorado River at this point affected by transmountain diversions, storage reservoirs, power developments, ground-water withdrawals, and diversions for irrigation, municipal, and industrial uses, and return flows from irrigated areas. Diversions to Mittry Lake, which began June 23, 1970, are included in river records in table below. Additional regulation, beginning Jan. 31, 1966, to equalize supplies for downstream water users, is provided by pumped storage in reservoir on Senator Wash, about 2 mi (3 km) upstream from Imperial Dam. Monthend contents of Senator Wash Reservoir, capacity, 13,840 acre-ft (17.1 hm^3) is given in table below.

COOPERATION.--Records of Sparling meter readings of diversion to Mittry Lake and contents of Senator Wash Reservoir furnished by Bureau of Reclamation.

COLORADO RIVER ABOVE IMPERIAL DAM, DIVERSIONS TO MITTRY LAKE, AND MONTHEND CONTENTS OF SENATOR WASH RESERVOIR, WATER YEAR OCTOBER 1974 TO SEPTEMBER 1975

Month	Discharge of Colorado River: Mean (cubic feet per second)	Discharge of Colorado River: Runoff in acre-feet	Diversions to Mittry Lake (acre-feet)a	Monthend contents, Senator Wash Reservoir (acre-feet)
October	6,642	408,400	658	8,640
November	4,888	290,900	539	4,910
December	4,903	301,500	432	2,390
CAL YR 1974	8,583	6,214,000	7,230	--
January	5,715	351,400	584	7,350
February	6,882	382,200	540	5,780
March	9,085	558,600	576	9,820
April	11,130	662,100	768	8,220
May	10,450	642,500	778	7,110
June	9,334	555,400	756	5,640
July	10,640	654,300	750	10,370
August	10,760	661,600	454	6,320
September	9,423	560,700	456	7,990
WTR YR 1975	8,329	6,030,000	7,290	--

a Included in first two columns of table.

NOTE.--Discharge of Colorado River, in first two columns of table above, is combined discharge of Colorado River below Imperial Dam (sta 09429500) and diversions to All-American Canal, Gila Gravity Main Canal, and Mittry Lake.

09429490 COLORADO RIVER ABOVE IMPERIAL DAM, ARIZ.-CALIF.--Continued

PERIOD OF RECORD.--Chemical analyses: August 1969 to current year. Prior to October 1971, published as sta 09429500, Colorado River at Imperial Dam, Ariz.-Calif.
Water temperatures: October 1974 to September 1975.

EXTREMES.--Current year:
Specific conductance: Maximum daily, 1,560 micromhos Nov. 30; minimum daily, 1,200 micromhos Feb. 28.
Water temperatures: Maximum, 31.0°C on several days during July and August; minimum, 9.0°C Dec. 26.
Period of record:
Specific conductance: Maximum daily, 1,880 micromhos Nov. 21, 1969; minimum daily, 1,160 micromhos Mar. 26, 27, 1973.
Water temperatures: Maximum, 31.0°C on several days in 1975; minimum, 9.0°C Dec. 26, 1974.

REMARKS.--Stream discharges reported with analyses represent total flow reaching Imperial Dam. Daily specific conductance record furnished by Bureau of Reclamation. Since January 1971, daily specific conductance measurements have been made using a composite of four water samples taken at 6-hour intervals. Composites of four water samples per day are analyzed for major chemical constituents. Tritium analyses available at U.S. Geological Survey, Water Resources Division, Reston, Virginia.

WATER QUALITY DATA, WATER YEAR OCTOBER 1974 TO SEPTEMBER 1975

DATE	DIS-CHARGE (CFS)	DIS-SOLVED SILICA (SIO2) (MG/L)	DIS-SOLVED CAL-CIUM (CA) (MG/L)	DIS-SOLVED MAG-NE-SIUM (MG) (MG/L)	DIS-SOLVED SODIUM (NA) (MG/L)	DIS-SOLVED PO-TAS-SIUM (K) (MG/L)	BICAR-BONATE (HCO3) (MG/L)	CAR-BONATE (CO3) (MG/L)	DIS-SOLVED SULFATE (SO4) (MG/L)	DIS-SOLVED CHLO-RIDE (CL) (MG/L)	DIS-SOLVED FLUO-RIDE (F) (MG/L)
OCT.											
02...	8160	7.0	92	32	140	6.3	166	0	350	120	.5
07...	7680	6.0	94	33	140	6.3	176	0	355	122	.5
14...	6590	7.0	95	34	145	6.5	180	0	360	125	.5
21...	6350	8.0	95	32	145	6.5	176	0	360	122	.5
28...	4590	8.0	106	32	160	6.5	196	0	380	140	.6
NOV.											
04...	4830	10	103	34	165	6.5	194	0	385	142	.5
11...	5230	11	98	33	160	6.8	184	0	375	135	.5
18...	4770	10	100	34	155	6.7	186	0	375	135	.5
25...	4840	10	100	34	160	6.7	192	0	380	140	.6
DEC.											
02...	3870	9.0	105	35	175	6.6	204	0	390	152	.7
09...	3870	10	104	35	175	6.7	206	0	390	155	.5
16...	5190	10	98	32	145	6.4	182	0	360	125	.5
23...	5340	8.0	98	33	160	6.2	184	0	375	138	.5
30...	6410	10	98	31	145	6.2	178	0	355	128	.5
JAN.											
06...	4250	8.0	96	34	150	5.7	182	0	360	132	.5
13...	5480	8.0	97	34	145	5.6	182	0	360	125	.5
20...	5420	9.0	97	34	155	5.6	184	0	365	135	.5
27...	6340	9.0	93	34	145	5.4	176	0	355	128	.5
FEB.											
03...	5510	9.0	95	32	145	6.2	178	0	355	128	.4
10...	6440	10	96	32	140	5.8	176	0	350	122	.5
17...	6640	8.0	96	31	140	5.6	176	0	345	120	.4
24...	8400	8.0	93	32	135	5.2	176	0	340	115	.5
MAR.											
03...	8510	9.0	95	31	135	5.7	176	0	345	115	.4
10...	8340	8.0	95	31	135	5.8	178	0	340	115	.4
17...	8000	9.0	97	31	140	5.4	182	0	345	120	.5
24...	11100	8.0	94	29	125	5.0	172	0	330	104	.4
31...	10920	8.0	95	31	125	5.6	178	0	335	108	.4
APR.											
07...	11500	9.0	96	31	130	5.7	178	0	335	110	.5
14...	7940	9.0	98	31	145	5.8	184	0	355	120	.5
21...	11840	7.0	94	31	130	5.3	176	0	335	108	.5
28...	12600	7.0	94	31	130	5.6	176	0	335	108	.5
MAY											
05...	11000	8.0	95	32	130	5.7	180	0	345	110	.6
12...	9580	8.0	97	31	130	5.7	180	0	340	115	.5
19...	10340	8.0	95	32	135	5.6	180	0	340	117	.5
26...	9310	7.0	98	31	140	5.8	184	0	345	118	.5
JUNE											
02...	9560	7.0	95	32	135	5.9	182	0	345	118	.5
09...	8770	6.0	95	32	140	5.5	186	0	345	118	.5
16...	9100	7.0	98	31	130	6.0	182	0	340	112	.5
23...	8930	8.0	97	31	130	5.7	182	0	340	112	.5
30...	10070	7.0	91	34	130	6.0	174	0	340	110	.6
JULY											
07...	10160	8.0	89	34	125	5.9	172	0	335	108	.5
14...	10540	8.0	94	31	130	6.0	174	0	335	110	.5
21...	11000	9.0	92	32	125	6.3	174	0	335	105	.5
28...	11160	9.0	90	32	125	6.0	168	0	330	105	.5
AUG.											
04...	10020	7.0	92	33	130	5.7	172	0	340	110	.5
11...	11680	8.0	89	32	125	5.7	172	0	335	105	.5
18...	10920	7.0	90	33	130	5.4	170	0	335	111	.6
25...	9784	9.0	92	33	130	5.7	174	0	340	112	.6
SEP.											
01...	10160	8.0	89	34	125	5.8	172	0	335	108	.5
08...	9227	8.0	90	33	130	5.8	172	0	335	112	.5
15...	8845	9.0	94	33	135	5.8	176	0	345	119	.5
22...	9140	9.0	92	33	135	5.9	172	0	340	118	.5
29...	8990	8.0	90	33	135	5.9	166	0	340	118	.5

09429490 COLORADO RIVER ABOVE IMPERIAL DAM, ARIZ.-CALIF.--Continued

WATER QUALITY DATA, WATER YEAR OCTOBER 1974 TO SEPTEMBER 1975

DATE	DIS-SOLVED SOLIDS (RESI-DUE AT 180 C) (MG/L)	DIS-SOLVED SOLIDS (SUM OF CONSTI-TUENTS) (MG/L)	DIS-SOLVED SOLIDS (TONS PER AC-FT)	HARD-NESS (CA,MG) (MG/L)	NON-CAR-BONATE HARD-NESS (MG/L)	SODIUM AD-SORP-TION RATIO	SPE-CIFIC CON-DUCT-ANCE (MICRO-MHOS)	PH (UNITS)	TUR-BID-ITY (JTU)	TUR-BID-ITY (NTU)
OCT.										
02...	872	831	1.19	360	224	3.2	1300	8.0	1	--
07...	852	845	1.16	370	226	3.2	1320	7.9	1	--
14...	864	863	1.18	375	228	3.2	1350	8.0	1	--
21...	858	857	1.17	370	226	3.3	1340	8.0	1	--
28...	948	931	1.29	395	234	3.5	1460	8.0	2	--
NOV.										
04...	942	943	1.28	395	236	3.6	1480	7.9	1	--
11...	922	911	1.25	380	229	3.6	1430	8.0	1	--
18...	920	909	1.25	390	238	3.4	1420	8.0	1	--
25...	932	927	1.27	390	232	3.5	1450	8.0	1	--
DEC.										
02...	974	973	1.32	405	238	3.8	1520	8.0	1	--
09...	982	977	1.34	405	236	3.8	1530	8.0	1	--
16...	866	867	1.18	375	226	3.3	1360	8.0	1	--
23...	912	910	1.24	380	229	3.6	1430	8.0	1	--
30...	866	862	1.18	370	224	3.3	1350	7.7	2	--
JAN.										
06...	880	876	1.20	380	231	3.4	1370	7.9	1	--
13...	870	865	1.18	380	231	3.2	1360	8.0	1	--
20...	894	892	1.22	380	229	3.5	1400	7.9	2	--
27...	860	857	1.17	370	226	3.3	1350	7.8	2	--
FEB.										
03...	860	859	1.17	370	224	3.3	1350	7.9	--	1
10...	844	843	1.15	370	226	3.2	1320	7.9	--	1
17...	838	833	1.14	365	220	3.2	1310	8.0	--	1
24...	818	816	1.11	365	220	3.1	1280	7.9	--	3
MAR.										
03...	834	823	1.13	365	220	3.1	1290	8.0	--	3
10...	826	818	1.12	365	219	3.1	1280	7.9	--	2
17...	844	838	1.15	370	221	3.2	1310	8.0	--	3
24...	782	780	1.06	355	214	2.9	1220	7.9	--	4
31...	796	796	1.08	365	219	2.8	1250	8.0	--	2
APR.										
07...	808	805	1.10	365	219	3.0	1260	8.0	--	1
14...	862	855	1.17	370	219	3.3	1340	7.9	--	2
21...	806	798	1.10	360	216	3.0	1250	8.0	--	2
28...	808	798	1.10	360	216	3.0	1250	7.9	--	2
MAY										
05...	816	815	1.11	370	222	2.9	1280	8.1	--	1
12...	824	816	1.12	370	222	2.9	1280	8.0	--	1
19...	828	822	1.13	370	222	3.1	1290	8.1	--	1
26...	840	836	1.14	370	219	3.2	1310	8.1	--	1
JUNE										
02...	828	828	1.13	370	221	3.1	1300	8.1	--	1
09...	840	834	1.14	370	219	3.2	1310	8.2	1	1
16...	832	814	1.13	370	221	2.9	1280	8.0	--	1
23...	832	814	1.13	370	221	2.9	1280	8.0	--	1
30...	806	805	1.10	365	222	3.0	1260	8.1	--	1
JULY										
07...	792	790	1.08	360	219	2.9	1240	8.0	--	1
14...	810	800	1.10	360	218	3.0	1250	8.1	--	1
21...	798	791	1.09	360	218	2.9	1240	8.1	--	4
28...	784	780	1.07	355	217	2.9	1220	8.2	--	3
AUG.										
04...	808	803	1.10	365	224	3.0	1260	8.0	--	7
11...	790	785	1.07	355	214	2.9	1230	8.0	--	3
18...	800	796	1.09	360	220	3.0	1250	8.1	--	1
25...	810	808	1.10	365	222	3.0	1270	8.0	--	2
SEP.										
01...	792	790	1.08	360	219	2.9	1240	8.0	--	2
08...	798	799	1.09	360	219	3.0	1250	8.0	--	5
15...	830	828	1.13	370	226	3.1	1300	8.0	--	4
22...	822	818	1.12	365	224	3.1	1290	8.0	--	5
29...	814	812	1.11	360	224	3.1	1280	8.0	--	5

09429490 COLORADO RIVER ABOVE IMPERIAL DAM, ARIZ.-CALIF.--Continued

WATER QUALITY DATA, WATER YEAR OCTOBER 1974 TO SEPTEMBER 1975

DATE	TIME	TOTAL NITRATE (N) (MG/L)	DIS-SOLVED NITRATE (N) (MG/L)	TOTAL NITRITE (N) (MG/L)	DIS-SOLVED NITRITE (N) (MG/L)	TOTAL NITRITE PLUS NITRATE (N) (MG/L)	AMMONIA NITRO-GEN (N) (MG/L)
OCT.							
09...	1200	.16	--	.00	.01	.16	.08
22...	1040	.13	.14	.00	.00	.13	.04
NOV.							
05...	1330	.17	--	.01	.01	.18	.04
DEC.							
03...	1300	.20	--	.01	.00	.21	.02
17...	1110	.20	.21	.00	.00	.20	.04
JAN.							
07...	1330	.15	--	.01	.00	.16	.04
21...	1100	.21	.23	.01	.01	.22	.02
FEB.							
11...	1345	.21	--	.00	.00	.21	.03
25...	1025	.15	.14	.00	.00	.15	.01
MAR.							
11...	1235	.17	--	.01	.01	.18	.02
25...	1100	.16	.15	.00	.00	.16	.04
APR.							
08...	1400	.21	--	.00	.00	.21	.01
22...	1040	.17	.17	.00	.01	.17	.00
MAY							
06...	1345	.17	--	.00	.00	.17	.01
20...	1035	.14	.15	.00	.00	.14	.00
JUNE							
10...	1335	.10	--	.00	.00	.10	.00
24...	1105	.10	.09	.00	.00	.10	.01
JULY							
08...	1330	.15	--	.01	.00	.16	.00
22...	1030	.07	--	.01	--	.08	.03
AUG.							
05...	1445	.06	--	.01	.01	.07	.00
19...	1100	.07	--	.01	--	.08	.00
SEP.							
09...	1200	.09	--	.01	.01	.10	.00
23...	1035	.09	--	.01	--	.10	.00

DATE	TOTAL ORGANIC NITRO-GEN (N) (MG/L)	TOTAL KJEL-DAHL NITRO-GEN (N) (MG/L)	TOTAL NITRO-GEN (N) (MG/L)	TOTAL NITRO-GEN (NO3) (MG/L)	TOTAL PHOS-PHORUS (P) (MG/L)	DIS-SOL-VED-PHOS-PHORUS (P) (MG/L)
OCT.						
09...	.59	.67	.83	3.7	.04	--
22...	.43	.47	.60	2.7	.01	--
NOV.						
05...	.27	.31	.49	2.2	.01	.00
DEC.						
03...	.23	.25	.46	2.0	.02	--
17...	.17	.21	.41	1.8	.03	--
JAN.						
07...	.32	.36	.52	2.3	.01	--
21...	.41	.43	.65	2.9	.03	--
FEB.						
11...	.23	.26	.47	2.1	.01	.03
25...	.47	.48	.63	2.8	.04	--
MAR.						
11...	.23	.25	.43	1.9	.02	--
25...	.32	.36	.52	2.3	.03	--
APR.						
08...	.25	.26	.47	2.1	.03	--
22...	.26	.26	.43	1.9	.01	--
MAY						
06...	.16	.17	.34	1.5	.05	.00
20...	.08	.08	.22	.97	.02	--
JUNE						
10...	.09	.09	.19	.84	.00	--
24...	.59	.60	.70	3.1	.01	--
JULY						
08...	.19	.19	.35	1.6	.02	--
22...	.44	.47	.55	2.4	.03	--
AUG.						
05...	.34	.34	.41	1.8	.02	.01
19...	.57	.57	.65	2.9	.04	--
SEP.						
09...	.43	.43	.53	2.3	.03	--
23...	.37	.37	.47	2.1	.03	--

09429490 COLORADO RIVER ABOVE IMPERIAL DAM, ARIZ.-CALIF.--Continued

WATER QUALITY DATA, WATER YEAR OCTOBER 1974 TO SEPTEMBER 1975

DATE	TIME	TOTAL PHYTO-PLANK-TON (CELLS PER ML)	TOTAL SESTON (MG/L)	SESTON ASH WEIGHT (MG/L)	PERI-PHYTON BIOMASS ASH WEIGHT G/SQ M	PERI-PHYTON BIOMASS TOTAL DRY WEIGHT G/SQ M	UNCOR-RECTED PERI-PHYTON CHLORO-PHYLL A MG/SQ M
OCT.							
09...	1200	8800	--	--	--	--	--
22...	1040	--	--	--	--	--	--
NOV.							
05...	1330	1900	--	--	.800	--	.400
DEC.							
03...	1300	970	--	--	--	--	--
17...	1110	--	--	--	--	--	--
JAN.							
07...	1330	180	--	--	--	--	--
21...	1100	--	--	--	--	--	--
FEB.							
11...	1345	4400	--	--	.200	.300	22.0
25...	1025	--	--	--	--	--	--
MAR.							
11...	1235	9500	--	--	--	--	--
25...	1100	--	--	--	--	--	--
APR.							
08...	1400	2700	--	--	--	--	--
22...	1040	--	--	--	--	--	--
MAY							
06...	1345	2300	--	--	23.0	26.0	14.0
20...	1035	--	--	--	--	--	--
JUNE							
10...	1335	410	--	--	--	--	--
24...	1105	--	--	--	--	--	--
JULY							
08...	1330	--	.0	.0	--	--	--
22...	1030	--	--	--	--	--	--
AUG.							
05...	1445	--	.0	.0	1.20	2.50	1.40
19...	1100	--	--	--	--	--	--
SEP.							
09...	1200	--	.0	.0	--	--	--
23...	1035	--	--	--	--	--	--

DATE	UNCOR-RECTED PERI-PHYTON CHLORO-PHYLL B MG/SQ M	CHLORO-PHYLL A (UG/L)	CHLORO-PHYLL B (UG/L)	FECAL COLI-FORM (COL. PER 100 ML)	STREP-TOCOCCI (COL-ONIES PER 100 ML)	TOTAL ORGANIC CARBON (C) (MG/L)
OCT.						
09...	--	1.70	1.70	36	B11	8.8
22...	--	--	--	--	--	4.4
NOV.						
05...	.800	1.50	1.00	100	B15	3.8
DEC.						
03...	--	2.80	5.10	B10	69	3.5
17...	--	--	--	--	--	3.0
JAN.						
07...	--	4.50	3.20	B8	34	3.8
21...	--	--	--	--	--	3.8
FEB.						
11...	1.90	3.80	5.30	B10	B5	3.5
25...	--	--	--	--	--	6.8
MAR.						
11...	--	6.80	7.20	37	75	6.2
25...	--	--	--	--	--	5.8
APR.						
08...	--	7.40	13.0	B5	47	5.0
22...	--	--	--	--	--	3.1
MAY						
06...	3.70	2.90	2.40	--	--	3.3
20...	--	--	--	--	--	3.6
JUNE						
10...	--	8.10	11.0	B5	38	3.7
24...	--	--	--	--	--	3.2
JULY						
08...	--	3.50	2.60	24	180	6.0
22...	--	--	--	--	--	4.0
AUG.						
05...	.300	3.90	4.30	B10	48	5.2
19...	--	--	--	--	--	3.0
SEP.						
09...	--	5.20	5.10	130	96	11
23...	--	--	--	--	--	4.4

B Results based on colony count ouseide the acceptable range (non-ideal colony count).

09429490 COLORADO RIVER ABOVE IMPERIAL DAM, ARIZ.-CALIF.--Continued

WATER QUALITY DATA, WATER YEAR OCTOBER 1974 TO SEPTEMBER 1975

DATE	TIME	INSTANTANEOUS DISCHARGE (CFS)	TOTAL ALDRIN (UG/L)	TOTAL CHLORDANE (UG/L)	TOTAL DDD (UG/L)	TOTAL DDE (UG/L)	TOTAL DDT (UG/L)	TOTAL DIAZINON (UG/L)	TOTAL DIELDRIN (UG/L)	TOTAL ENDRIN (UG/L)	TOTAL ETHION (UG/L)	TOTAL HEPTACHLOR (UG/L)
OCT. 22...	1040	6650	.00	.0	.00	.00	.00	.00	.00	.00	.00	.00
NOV. 05...	1330	4680	.00	.0	.00	.00	.00	.00	.00	.00	.00	.00
JAN. 07...	1330	4680	.00	.0	.00	.00	.00	.00	.00	.00	.00	.00
FEB. 11...	1345	6450	.00	.0	.00	.00	.00	.00	.00	.00	.00	.00
MAR. 11...	1235	8390	.00	.0	.00	.00	.00	.00	.00	.00	.00	.00
APR. 08...	1400	11960	.00	.0	.00	.00	.00	.00	.00	.00	--	.00
MAY 06...	1345	11380	.00	.0	.00	.00	.00	.00	.00	.00	--	.00
JUNE 24...	1105	9920	.00	.0	.00	.00	.00	.00	.00	.00	--	.00
JULY 08...	1330	11090	.00	.0	.00	.00	.00	.00	.00	.00	--	.00
AUG. 05...	1445	10940	.00	.0	.00	.00	.00	.00	.00	.00	--	.00
SEP. 09...	1200	8740	.00	.0	.00	.00	.00	.00	.00	.00	.00	.00

DATE	TOTAL HEPTACHLOR EPOXIDE (UG/L)	TOTAL LINDANE (UG/L)	TOTAL MALATHION (UG/L)	TOTAL METHYL PARATHION (UG/L)	TOTAL METHYL TRITHION (UG/L)	TOTAL PARATHION (UG/L)	TOTAL PCB (UG/L)	TOTAL TOXAPHENE (UG/L)	TOTAL TRITHION (UG/L)	TOTAL 2,4-D (UG/L)	TOTAL 2,4,5-T (UG/L)	TOTAL SILVEX (UG/L)
OCT. 22...	.00	.00	.00	.00	.00	.00	.0	0	.00	.00	.00	.00
NOV. 05...	.00	.00	.00	.00	.00	.00	.0	0	.00	.00	.00	.00
JAN. 07...	.00	.00	.00	.00	.00	.00	.0	0	.00	.00	.00	.00
FEB. 11...	.00	.00	.00	.00	.00	.00	.0	0	.00	.00	.00	.00
MAR. 11...	.00	.00	.00	.00	.00	.00	.0	0	.00	.02	.00	.00
APR. 08...	.00	.00	.00	.00	--	.00	.0	0	--	.00	.00	.00
MAY 06...	.00	.00	.00	.00	--	.00	.0	0	--	.00	.00	.00
JUNE 24...	.00	.00	.00	.00	--	.00	.0	0	--	.00	.00	.00
JULY 08...	.00	.00	.00	.00	--	.00	.0	0	--	.00	.00	.00
AUG. 05...	.00	.00	.00	.00	--	.00	.0	0	--	.00	.00	.00
SEP. 09...	.00	.00	.00	.00	.00	.00	.0	0	.00	.00	.00	.00

09429490 COLORADO RIVER ABOVE IMPERIAL DAM, ARIZ.-CALIF.--Continued

WATER QUALITY DATA, WATER YEAR OCTOBER 1974 TO SEPTEMBER 1975

DATE	TIME	INSTANTANEOUS DISCHARGE (CFS)	TOTAL IRON (FE) (UG/L)	DISSOLVED IRON (FE) (UG/L)	TOTAL MANGANESE (MN) (UG/L)	DISSOLVED MANGANESE (MN) (UG/L)	TOTAL CALCIUM (CA) (MG/L)	TOTAL MAGNESIUM (MG) (MG/L)	TOTAL SODIUM (NA) (MG/L)	TOTAL POTASSIUM (K) (MG/L)	TOTAL ARSENIC (AS) (UG/L)	DISSOLVED ARSENIC (AS) (UG/L)
OCT.												
09...	1200	8150	160	--	--	--	--	--	--	--	--	--
22...	1040	6650	200	--	--	--	--	--	--	--	--	--
NOV.												
05...	1330	4680	100	100	50	10	85	27	140	5.1	4	4
DEC.												
03...	1300	4350	140	--	--	--	--	--	--	--	--	--
17...	1110	5390	220	--	--	--	--	--	--	--	--	--
JAN.												
07...	1330	4680	250	--	--	--	--	--	--	--	--	--
21...	1100	5760	600	--	--	--	--	--	--	--	--	--
FEB.												
11...	1345	6450	440	10	40	0	94	31	140	4.5	1	1
25...	1025	8940	900	--	--	--	--	--	--	--	--	--
MAR.												
11...	1235	8390	530	--	--	--	--	--	--	--	--	--
25...	1100	11490	720	--	--	--	--	--	--	--	--	--
APR.												
08...	1400	11960	460	--	--	--	--	--	--	--	--	--
22...	1040	12330	290	--	--	--	--	--	--	--	--	--
MAY												
06...	1345	11380	0	10	70	0	87	31	120	4.1	4	4
20...	1035	10230	400	--	--	--	--	--	--	--	--	--
JUNE												
10...	1335	9140	170	--	--	--	--	--	--	--	--	--
24...	1105	9920	440	--	--	--	--	--	--	--	--	--
JULY												
08...	1330	11090	670	--	--	--	--	--	--	--	--	--
22...	1030	11300	520	--	--	--	--	--	--	--	--	--
AUG.												
05...	1445	10940	350	30	40	0	69	30	130	5.3	2	2
19...	1100	11180	440	--	--	--	--	--	--	--	--	--
SEP.												
09...	1200	8740	300	--	--	--	--	--	--	--	--	--
23...	1035	9347	950	--	--	--	--	--	--	--	--	--

DATE	DISSOLVED BORON (B) (UG/L)	TOTAL CADMIUM (CD) (UG/L)	DISSOLVED CADMIUM (CD) (UG/L)	TOTAL CHROMIUM (CR) (UG/L)	DISSOLVED CHROMIUM (CR) (UG/L)	TOTAL COBALT (CO) (UG/L)	DISSOLVED COBALT (CO) (UG/L)	TOTAL COPPER (CU) (UG/L)	DISSOLVED COPPER (CU) (UG/L)	TOTAL LEAD (PB) (UG/L)	DISSOLVED LEAD (PB) (UG/L)	TOTAL MERCURY (HG) (UG/L)
OCT.												
09...	170	--	--	--	--	--	--	--	--	--	--	--
22...	220	--	--	--	--	--	--	--	--	--	--	--
NOV.												
05...	210	10	<1	0	0	<50	1	<10	0	<100	11	.0
DEC.												
03...	220	--	--	--	--	--	--	--	--	--	--	--
17...	200	--	--	--	--	--	--	--	--	--	--	--
JAN.												
07...	210	--	--	--	--	--	--	--	--	--	--	--
21...	190	--	--	--	--	--	--	--	--	--	--	--
FEB.												
11...	180	<10	0	0	0	<50	1	480	0	<100	3	.0
25...	180	--	--	--	--	--	--	--	--	--	--	--
MAR.												
11...	170	--	--	--	--	--	--	--	--	--	--	--
25...	180	--	--	--	--	--	--	--	--	--	--	--
APR.												
08...	180	--	--	--	--	--	--	--	--	--	--	--
22...	180	--	--	--	--	--	--	--	--	--	--	--
MAY												
06...	190	<10	0	0	0	<50	3	<10	1	<100	0	.0
20...	190	--	--	--	--	--	--	--	--	--	--	--
JUNE												
10...	190	--	--	--	--	--	--	--	--	--	--	--
24...	170	--	--	--	--	--	--	--	--	--	--	--
JULY												
08...	140	--	--	--	--	--	--	--	--	--	--	--
22...	--	--	--	--	--	--	--	--	--	--	--	--
AUG.												
05...	180	<10	0	6	5	0	0	10	1	<100	0	.1
19...	--	--	--	--	--	--	--	--	--	--	--	--
SEP.												
09...	190	--	--	--	--	--	--	--	--	--	--	--
23...	--	--	--	--	--	--	--	--	--	--	--	--

09429490 COLORADO RIVER ABOVE IMPERIAL DAM, ARIZ.-CALIF.--Continued

WATER QUALITY DATA, WATER YEAR OCTOBER 1974 TO SEPTEMBER 1975

DATE	DIS-SOLVED MERCURY (HG) (UG/L)	TOTAL SELE-NIUM (SE) (UG/L)	DIS-SOLVED SELE-NIUM (SE) (UG/L)	TOTAL ZINC (ZN) (UG/L)	DIS-SOLVED ZINC (ZN) (UG/L)	TOTAL NON-FILT-RABLE RESIDUE (MG/L)	SPE-CIFIC CON-DUCT-ANCE (MICRO-MHOS)	PH (UNITS)	TEMPER-ATURE (DEG C)	DIS-SOLVED OXYGEN (MG/L)	CHEM-ICAL OXYGEN DEMAND (HIGH LEVEL) (MG/L)
OCT.											
09...	--	--	--	--	--	18	1280	8.2	25.5	8.0	15
22...	--	--	--	--	--	11	--	--	23.0	--	9
NOV.											
05...	.0	3	2	90	30	56	1400	8.1	18.0	9.4	20
DEC.											
03...	--	--	--	--	--	12	1470	8.1	9.0	10.3	11
17...	--	--	--	--	--	13	--	--	13.0	--	14
JAN.											
07...	--	--	--	--	--	7	1370	8.2	10.0	10.3	14
21...	--	--	--	--	--	8	--	--	10.5	--	2
FEB.											
11...	.0	3	2	20	10	20	1380	8.0	14.0	8.8	9
25...	--	--	--	--	--	30	--	--	12.0	--	11
MAR.											
11...	--	--	--	--	--	28	1320	8.3	14.0	10.0	11
25...	--	--	--	--	--	20	--	--	16.0	--	11
APR.											
08...	--	--	--	--	--	24	1320	8.2	15.5	9.2	12
22...	--	--	--	--	--	24	--	--	18.5	--	11
MAY											
06...	.0	4	4	8	0	32	1300	8.2	19.5	8.8	13
20...	--	--	--	--	--	20	--	--	21.0	--	11
JUNE											
10...	--	--	--	--	--	20	1330	7.8	26.5	8.1	9
24...	--	--	--	--	--	188	--	--	25.0	--	8
JULY											
08...	--	--	--	--	--	39	1260	8.2	28.5	7.9	10
22...	--	--	--	--	--	40	--	--	28.5	--	11
AUG.											
05...	.0	4	4	20	10	20	1310	8.3	30.0	7.5	9
19...	--	--	--	--	--	8	--	--	28.0	--	18
SEP.											
09...	--	--	--	--	--	12	1310	7.9	28.0	7.4	12
23...	--	--	--	--	--	28	--	--	25.0	--	7

DATE	TIME	INSTAN-TANEOUS DIS-CHARGE (CFS)	DIS-SOLVED GROSS ALPHA AS U-NAT. (UG/L)	SUS-PENDED GROSS ALPHA AS U-NAT. (UG/L)	DIS-SOLVED GROSS BETA AS CS-137 (PC/L)	SUS-PENDED GROSS BETA AS CS-137 (PC/L)	DIS-SOLVED GROSS BETA AS SR90 /Y90 (PC/L)	SUS-PENDED GROSS BETA AS SR90 /Y90 (PC/L)	DIS-SOLVED RA-226 (RADON METHOD) (PC/L)	DIS-SOLVED NATURAL URANIUM (U) (UG/L)	TOTAL FILT-RABLE RESIDUE (MG/L)	TOTAL NON-FILT-RABLE RESIDUE (MG/L)
JAN.												
07...	1330	4680	13	<.4	9.7	1.1	7.8	1.0	.12	4.1	940	7
JULY												
08...	1330	11090	12	1.4	11	1.9	8.5	1.5	.12	4.7	890	39

09429490 COLORADO RIVER ABOVE IMPERIAL DAM, ARIZ.-CALIF.--Continued

SPECIFIC CONDUCTANCE (MICROMHOS/CM AT 25 DEG. C), WATER YEAR OCTOBER 1974 TO SEPTEMBER 1975
MEAN VALUES

DAY	OCT	NOV	DEC	JAN	FEB	MAR	APR	MAY	JUN	JUL	AUG	SEP
1	1320	1450	1530	1400	1330	1330	1260	1280	1310	1260	1290	1240
2	1300	1530	1520	1330	1360	1350	1250	1290	1300	1250	1310	1250
3	1290	1550	1490	1310	1350	1290	1260	1300	1300	1280	1300	1240
4	1320	1480	1480	1330	1390	1270	1280	1290	1290	1290	1260	1240
5	1340	1400	1460	1340	1360	1250	1280	1280	1290	1290	1260	1270
6	1340	1400	1460	1370	1370	1270	1260	1290	1300	1250	1260	1290
7	1320	1400	1410	1370	1370	1290	1260	1270	1310	1240	1260	1280
8	1280	1390	1480	1430	1380	1290	1250	1280	1320	1240	1250	1250
9	1280	1420	1530	1400	1360	1320	1250	1290	1310	1240	1290	1240
10	1280	1460	1530	1390	1320	1280	1240	1300	1300	1260	1240	1300
11	1320	1430	1470	1390	1310	1260	1270	1310	1290	1270	1230	1300
12	1350	1400	1420	1390	1300	1280	1380	1280	1280	1270	1230	1310
13	1370	1380	1370	1360	1330	1310	1360	1280	1290	1260	1230	1330
14	1350	1380	1370	1320	1320	1340	1340	1300	1310	1250	1220	1340
15	1350	1360	1390	1330	1340	1350	1330	1290	1300	1250	1260	1300
16	1360	1370	1360	1320	1330	1340	1320	1290	1280	1250	1260	1280
17	1320	1410	1360	1330	1310	1310	1300	1310	1280	1250	1260	1270
18	1330	1420	1340	1350	1310	1310	1290	1290	1280	1260	1250	1280
19	1350	1400	1350	1370	1330	1290	1250	1290	1280	1250	1250	1300
20	1370	1390	1370	1400	1330	1300	1270	1280	1290	1250	1240	1310
21	1340	1380	1380	1350	1320	1290	1250	1290	1290	1240	1280	1320
22	1340	1370	1410	1360	1330	1290	1260	1300	1300	1240	1270	1290
23	1320	1410	1430	1360	1330	1270	1230	1310	1280	1250	1280	1290
24	1300	1460	1440	1370	1280	1220	1250	1330	1300	1250	1270	1290
25	1360	1450	1530	1380	1300	1250	1260	1310	1320	1260	1270	1280
26	1420	1430	1450	1360	1260	1250	1280	1310	1330	1270	1260	1290
27	1490	1420	1330	1350	1310	1230	1240	1290	1300	1260	1250	1290
28	1460	1440	1340	1290	1200	1280	1250	1310	1290	1220	1270	1300
29	1430	1520	1330	1310	---	1280	1270	1320	1270	1250	1290	1280
30	1430	1560	1350	1310	---	1240	1270	1330	1260	1260	1290	1270
31	1430	---	1340	1310	---	1250	---	1330	---	1270	1270	---
MONTH	1350	1430	1420	1350	1330	1290	1280	1300	1300	1260	1260	1280

TEMPERATURE (DEG. C) OF WATER, WATER YEAR OCTOBER 1974 TO SEPTEMBER 1975
MEAN VALUES

DAY	OCT	NOV	DEC	JAN	FEB	MAR	APR	MAY	JUN	JUL	AUG	SEP
1	28.0	19.5	14.0	10.0	11.5	15.5	15.0	21.0	23.5	28.0	30.0	28.5
2	27.0	19.0	14.0	10.0	11.5	16.5	15.5	21.0	25.5	28.0	30.0	29.0
3	26.5	19.0	14.5	9.5	12.0	16.5	15.5	22.0	26.5	28.0	30.0	29.0
4	26.5	19.0	14.5	9.5	12.0	16.5	16.0	22.0	26.5	28.5	30.0	29.5
5	26.5	19.0	14.5	9.5	12.0	16.0	16.5	20.5	26.5	29.0	31.0	29.5
6	26.0	19.0	15.0	10.0	13.0	15.5	16.5	20.0	26.5	29.5	31.0	29.0
7	24.5	19.0	14.5	10.5	13.5	15.5	16.5	20.0	26.5	29.5	31.0	29.0
8	25.5	18.5	14.5	11.0	13.5	16.0	16.0	21.0	26.5	29.0	31.0	28.5
9	25.5	19.0	14.0	11.0	14.0	16.0	16.0	22.0	26.5	30.0	31.0	29.0
10	25.5	18.5	13.5	11.0	14.5	15.5	15.0	23.0	27.0	30.0	31.0	29.0
11	25.5	18.5	13.5	11.0	14.5	15.0	15.0	23.5	27.0	31.0	30.5	29.0
12	25.0	18.5	13.5	11.0	14.5	14.5	15.5	24.0	28.0	31.0	30.0	29.0
13	24.5	18.5	13.5	10.5	14.5	15.0	17.0	24.5	28.5	31.0	30.5	29.0
14	24.0	18.5	13.0	10.0	15.0	15.5	18.5	24.5	28.5	24.5	29.5	29.0
15	24.5	18.5	13.0	10.5	14.5	15.5	19.5	24.5	29.0	24.5	29.0	29.0
16	24.5	18.5	13.5	10.5	14.0	15.5	18.5	24.5	29.0	24.5	29.0	29.5
17	24.0	18.5	13.5	11.0	13.5	15.5	18.0	24.5	28.0	24.0	29.0	29.5
18	24.5	19.0	13.5	11.5	13.0	15.5	18.0	24.0	26.0	24.0	28.5	29.5
19	24.5	18.5	13.5	12.0	13.0	16.0	18.0	23.5	24.5	24.0	28.5	29.5
20	24.0	19.0	13.5	13.0	13.5	16.5	18.5	23.0	24.0	24.0	28.0	29.5
21	24.0	19.0	13.5	13.0	13.5	16.5	19.0	21.0	24.5	24.0	28.5	29.5
22	24.0	18.5	13.5	12.0	11.0	16.5	20.0	21.0	25.5	24.0	29.0	28.0
23	23.5	18.5	13.5	12.0	11.5	16.0	20.0	21.5	26.5	24.5	29.0	27.0
24	23.5	17.0	11.0	11.5	11.0	16.5	20.0	23.5	26.5	24.5	29.5	26.5
25	23.5	16.5	9.5	12.0	12.0	16.5	20.0	24.5	26.5	25.0	29.5	26.5
26	23.5	16.0	9.0	12.0	14.0	16.5	20.0	25.0	26.5	25.5	29.0	26.5
27	22.0	15.5	9.5	13.5	15.0	16.0	20.0	25.5	26.5	24.5	29.0	26.5
28	21.5	15.5	10.0	12.0	14.5	15.5	18.0	25.5	27.0	24.5	28.5	26.5
29	20.0	15.0	10.0	11.0	---	14.5	18.0	25.0	28.0	24.5	28.0	26.5
30	19.0	14.5	10.5	11.5	---	14.0	20.5	25.0	28.0	24.5	28.0	26.5
31	19.5	---	10.0	11.0	---	14.0	---	24.5	---	24.5	28.0	---
MONTH	24.0	18.0	13.0	11.0	13.0	15.5	17.5	23.0	26.5	26.5	29.5	28.5

09429500 COLORADO RIVER BELOW IMPERIAL DAM, ARIZ.-CALIF.

LOCATION.--Forebay gage: Lat 32°52'59", long 114°27'57", in NW¼SW¼ sec.9, T.15 S., R.24 E., San Bernardino meridian, in California, Imperial County, near All-American Canal headworks at west end of Imperial Dam, 5 mi (8 km) upstream from Laguna Dam, 15 mi (24 km) northeast of Yuma, 90 mi (145 km) downstream from Palo Verde Dam, and 147 mi (237 km) downstream from Parker Dam.

DRAINAGE AREA.--184,600 mi^2 (478,100 km^2), approximately.

PERIOD OF RECORD.--October 1960 to current year. Prior to October 1971 published as "at Imperial Dam." Records of flow reaching Imperial Dam, formerly published with this station, are now published separately as sta 09429490, Colorado River above Imperial Dam.

GAGE.--Water-stage recorder in forebay, 12 calibrated gates on California sluiceway, 8 calibrated gates on Gila sluiceway, and calibrated manometer on each discharge pipe from desilting basin. Datum of forebay gage is 162.00 ft (49.378 m) above mean sea level (Bureau of Reclamation bench mark).

EXTREMES.--Current year: Maximum daily discharge, 2,240 ft^3/s (63.4 m^3/s) Apr. 11; minimum daily, 225 ft^3/s (6.37 m^3/s) Nov. 22-27, Feb. 17 to Mar. 6.
Period of record: Maximum daily discharge, 5,040 ft^3/s (143 m^3/s) Mar. 3, 1970; minimum daily, 27 ft^3/s (0.76 m^3/s) Dec. 15-18, 1969.

REMARKS.--Records good. Records of daily discharge show flow of Colorado River passing Imperial Dam, and include water released to river through California and Gila sluiceways, sludge from desilting basins returned to river, and leakage through dam. Records of flow reaching Imperial Dam, formerly published as supplement to this station, are now published separately (see sta 09429490).
Flow of Colorado River regulated by many reservoirs, principally Lake Mead, since 1935. Many diversions from Colorado River and tributaries above station. Diversion to Mittry Lake and monthend contents of Senator Wash Reservoir also are now published with sta 09429490.

COOPERATION.--Records of gate openings furnished by Bureau of Reclamation. Records of sludge return flow from desilting basins furnished by Imperial Irrigation District.

DISCHARGE, IN CUBIC FEET PER SECOND, WATER YEAR OCTOBER 1974 TO SEPTEMBER 1975

DAY	OCT	NOV	DEC	JAN	FEB	MAR	APR	MAY	JUN	JUL	AUG	SEP
1	246	245	227	1,020	953	225	325	326	723	430	346	345
2	246	245	387	1,020	971	225	325	326	815	336	346	345
3	246	245	523	1,040	913	225	325	326	666	461	346	345
4	246	245	519	1,040	855	225	325	326	326	586	346	345
5	246	403	517	1,100	853	225	325	326	420	336	346	345
6	246	235	519	1,120	853	225	325	388	326	336	346	345
7	246	235	519	1,000	851	325	325	430	326	336	346	345
8	246	307	521	1,000	851	325	325	436	437	336	346	345
9	527	235	603	896	999	325	908	436	684	430	346	687
10	620	332	735	755	1,040	325	1,900	579	724	430	346	616
11	246	332	917	717	937	325	2,240	669	722	336	537	345
12	246	332	962	716	881	325	2,200	671	812	336	533	345
13	246	296	965	717	715	325	1,720	649	893	336	440	295
14	246	269	965	717	599	325	416	647	457	336	440	245
15	246	333	719	717	601	325	325	648	326	336	440	245
16	246	333	227	793	602	325	325	739	420	336	346	245
17	246	333	227	812	225	325	325	828	607	336	346	456
18	565	353	227	792	225	325	325	653	512	336	346	667
19	411	399	227	773	225	325	325	830	326	336	346	667
20	246	422	227	603	225	325	325	833	326	336	346	633
21	246	353	227	572	225	325	325	653	326	523	346	618
22	246	225	227	570	225	325	325	652	326	523	346	617
23	246	225	227	568	225	325	325	809	326	336	346	617
24	346	225	227	566	225	325	325	872	326	336	346	616
25	246	225	227	566	225	325	407	924	326	430	531	619
26	246	225	227	569	225	325	489	1,010	326	336	440	621
27	246	225	227	570	225	325	325	1,030	326	336	439	623
28	246	356	227	570	225	605	701	1,020	326	336	346	621
29	437	234	227	573	------	466	512	824	326	523	346	623
30	246	234	391	573	------	850	325	719	608	336	346	540
31	246	------	628	774	------	391	------	719	------	336	346	------
TOTAL	9,056	8,656	13,795	23,819	16,174	10,487	17,993	20,298	14,390	11,728	11,758	14,321
MEAN	292	289	445	768	578	338	600	655	480	378	379	477
MAX	620	422	965	1,120	1,040	850	2,240	1,030	893	586	537	687
MIN	246	225	227	566	225	225	325	326	326	336	346	245
AC-FT	17,960	17,170	27,360	47,240	32,080	20,800	35,690	40,260	28,540	23,260	23,320	28,410

CAL YR 1974 TOTAL 160,668 MEAN 440 MAX 1,590 MIN 148 AC-FT 318,700
WTR YR 1975 TOTAL 172,475 MEAN 473 MAX 2,240 MIN 225 AC-FT 342,100

09429600 COLORADO RIVER BELOW LAGUNA DAM, ARIZ.-CALIF.

LOCATION.--Lat 32°48'44", long 114°30'51", in SE¼NE¼ sec.35, T.15 S., R.23 E., San Bernardino meridian, in California, Imperial County, on right bank 1.4 mi (2.3 km) downstream from Laguna Dam, 2.8 mi (4.5 km) northeast of Bard, Calif., and 10 mi (16 km) northeast of Yuma, Ariz.

DRAINAGE AREA.--184,700 mi^2 (478,400 km^2), approximately.

PERIOD OF RECORD.--December 1971 to current year.

GAGE.--Water-stage recorder. Datum of gage is 120.84 ft (36.832 m) above mean sea level (Bureau of Reclamation bench mark).

EXTREMES.--Current year: Maximum discharge, 2,180 ft^3/s (61.7 m^3/s) Apr. 13 (gage height, 8.43 ft or 2.569 m); minimum daily, 222 ft^3/s (6.29 m^3/s) Nov. 30.
Period of record: Maximum discharge, 3,650 ft^3/s (103 m^3/s) Oct. 7, 1972 (gage height, 10.09 ft or 3.075 m); minimum daily, 71 ft^3/s (2.01 m^3/s) May 29, 1973.

REMARKS.--Records good. Natural flow of Colorado River at this point is affected by transmountain diversions, storage reservoirs, power developments, ground-water withdrawals, diversions for irrigation, municipal and industrial uses, and return flows from irrigated areas. Flow past station consists mainly of water released through Imperial Dam, sludge from the desilting basins at Imperial Dam, seepage through Imperial Dam, and seepage from the All-American Canal and the Gila Gravity Main Canal.

DISCHARGE, IN CUBIC FEET PER SECOND, WATER YEAR OCTOBER 1974 TO SEPTEMBER 1975

DAY	OCT	NOV	DEC	JAN	FEB	MAR	APR	MAY	JUN	JUL	AUG	SEP
1	290	345	254	946	906	305	386	344	885	350	316	355
2	299	332	388	988	940	300	354	340	781	350	312	353
3	299	326	544	963	908	292	305	339	551	451	544	351
4	299	318	554	983	846	280	405	344	372	598	758	350
5	308	334	546	994	843	280	625	344	380	295	460	435
6	312	342	536	1040	842	281	591	352	386	300	383	538
7	305	321	535	1040	843	288	460	439	371	323	377	519
8	300	321	534	1040	844	278	386	464	564	560	381	482
9	292	324	594	978	974	299	353	468	802	682	386	443
10	300	320	723	795	1070	361	1250	742	793	650	379	413
11	302	334	855	738	908	365	2070	905	771	442	354	364
12	268	338	946	732	853	366	1990	857	759	375	332	359
13	262	353	957	759	741	367	1870	834	788	370	344	323
14	258	316	965	807	608	368	689	734	537	363	358	293
15	285	334	924	744	579	367	414	705	373	356	352	292
16	366	318	335	689	565	370	640	698	372	355	340	469
17	350	366	289	711	288	368	742	675	373	354	344	628
18	337	376	283	712	268	368	485	640	373	354	343	624
19	334	406	281	720	285	368	428	666	356	355	348	656
20	319	431	283	693	308	370	417	694	308	356	347	671
21	330	435	308	643	342	413	410	660	291	339	448	630
22	360	388	306	624	348	512	396	628	291	345	571	611
23	363	288	303	602	338	474	387	674	292	320	558	601
24	373	247	295	595	328	388	381	816	296	321	527	619
25	374	242	288	591	332	376	376	896	318	327	412	636
26	360	240	289	591	298	369	378	1110	425	336	344	642
27	347	261	290	591	290	367	380	1120	675	334	351	652
28	338	255	290	589	288	356	376	1110	553	328	360	656
29	340	253	293	592	---	352	391	1180	341	350	357	656
30	336	222	269	594	---	367	367	1080	343	360	356	587
31	337	---	512	683	---	492	---	1010	---	313	357	---
TOTAL	9943	9686	14769	23767	16983	11107	18702	21868	14720	11912	12399	15208
MEAN	321	323	476	767	607	358	623	705	491	384	400	507
MAX	374	435	965	1040	1070	512	2070	1180	885	682	758	671
MIN	258	222	254	589	268	278	305	339	291	295	312	292
AC-FT	19720	19210	29290	47140	33690	22030	37100	43380	29200	23630	24590	30170

CAL YR 1974 TOTAL 168013 MEAN 460 MAX 1570 MIN 139 AC-FT 333300
WTR YR 1975 TOTAL 181064 MEAN 496 MAX 2070 MIN 222 AC-FT 359100

09429600 COLORADO RIVER BELOW LAGUNA DAM, ARIZ.-CALIF.--Continued

PERIOD OF RECORD.--Chemical analyses: July 1972 to current year.

WATER QUALITY DATA, WATER YEAR OCTOBER 1974 TO SEPTEMBER 1975

DATE	TIME	INSTANTANEOUS DISCHARGE (CFS)	DISSOLVED SILICA (SIO2) (MG/L)	DISSOLVED CALCIUM (CA) (MG/L)	DISSOLVED MAGNESIUM (MG) (MG/L)	DISSOLVED SODIUM (NA) (MG/L)	DISSOLVED POTASSIUM (K) (MG/L)	BICARBONATE (HCO3) (MG/L)	CARBONATE (CO3) (MG/L)	DISSOLVED SULFATE (SO4) (MG/L)	DISSOLVED CHLORIDE (CL) (MG/L)
OCT.											
07...	0110	295	11	98	34	170	6.7	188	0	375	155
14...	0200	252	10	100	32	165	6.9	192	0	370	145
21...	0100	312	11	98	32	155	6.7	182	0	365	135
28...	0110	332	10	103	32	180	6.6	200	0	380	160
NOV.											
04...	0140	315	13	108	34	200	7.0	212	0	395	188
11...	0110	332	11	98	34	175	7.3	194	0	380	155
18...	0100	360	10	98	33	165	6.8	190	0	370	145
25...	0140	245	12	104	33	185	6.7	200	0	385	170
DEC.											
02...	0100	258	13	108	33	190	6.8	196	0	400	172
09...	0105	537	12	105	31	170	7.0	198	0	380	150
16...	0135	456	11	102	37	190	6.7	200	0	390	180
23...	0150	298	12	100	34	175	6.2	192	0	375	160
30...	0100	285	10	100	34	175	6.4	200	0	375	160
JAN.											
06...	0200	982	9.0	95	32	145	5.7	178	0	355	128
13...	0200	711	8.0	101	31	155	5.8	190	0	365	135
20...	0100	699	9.0	97	34	155	5.6	188	0	365	132
27...	0135	564	9.0	100	32	155	5.7	186	0	365	138
FEB.											
03...	0105	912	9.0	98	32	145	6.2	180	0	355	128
10...	0110	1110	8.0	98	33	155	6.0	186	0	365	138
17...	0140	330	9.0	100	34	170	6.3	198	0	370	158
24...	0155	328	10	105	32	190	5.6	202	0	375	182
MAR.											
03...	0110	275	11	104	32	175	5.9	196	0	370	160
10...	0140	340	10	98	32	145	6.3	188	0	350	128
17...	0120	348	10	101	31	160	5.5	190	0	365	140
24...	0115	378	10	101	31	160	5.4	194	0	355	145
31...	0140	630	9.0	98	31	145	5.9	186	0	350	122
APR.											
07...	0100	540	10	106	33	185	6.5	196	0	375	185
14...	0100	1226	9.0	100	33	145	6.1	192	0	355	125
21...	0140	348	9.0	100	33	165	5.6	198	0	355	152
28...	0115	312	9.0	98	32	145	5.8	188	0	350	125
MAY											
05...	0155	280	9.0	101	31	145	5.9	190	0	350	130
12...	0145	711	8.0	99	31	145	6.1	188	0	350	128
19...	0140	558	9.0	98	31	140	5.9	180	0	345	121
26...	0215	1030	8.0	98	32	140	6.0	186	0	345	120
JUNE											
02...	0115	744	7.0	102	31	145	6.2	192	0	350	130
09...	0200	723	9.0	97	32	140	6.0	184	0	345	122
16...	0045	588	9.0	100	33	155	6.3	192	0	360	140
23...	0120	290	10	100	32	145	5.8	188	0	350	130
30...	0140	342	9.0	94	35	145	6.0	188	0	350	130
JULY											
07...	0130	332	9.0	99	32	145	6.0	190	0	350	130
14...	0100	363	9.0	96	32	145	6.1	186	0	345	128
21...	0140	345	10	94	32	145	6.5	184	0	345	125
28...	0400	328	11	94	34	145	6.2	188	0	350	128
AUG.											
04...	0250	817	9.0	94	32	140	5.9	178	0	345	122
11...	0055	372	10	96	34	150	6.1	184	0	355	135
18...	0125	342	9.0	96	33	150	5.7	184	0	355	130
25...	0115	549	11	98	32	150	5.8	184	0	355	135
SEP.											
01...	0135	352	11	96	31	145	6.1	178	0	350	128
09...	0220	450	12	93	35	155	6.2	186	0	355	142
15...	0110	292	11	96	35	160	6.0	192	0	365	145
22...	0135	621	9.0	94	34	150	6.4	180	0	355	135
29...	0230	660	10	94	32	145	6.1	174	0	350	128

09429600 COLORADO RIVER BELOW LAGUNA DAM, ARIZ.-CALIF.--Continued

WATER QUALITY DATA, WATER YEAR OCTOBER 1974 TO SEPTEMBER 1975

DATE	DIS-SOLVED FLUO-RIDE (F) (MG/L)	DIS-SOLVED SOLIDS (RESI-DUE AT 180 C) (MG/L)	DIS-SOLVED SOLIDS (SUM OF CONSTI-TUENTS) (MG/L)	DIS-SOLVED SOLIDS (TONS PER AC-FT)	HARD-NESS (CA,MG) (MG/L)	NON-CAR-BONATE HARD-NESS (MG/L)	SODIUM AD-SORP-TION RATIO	SPE-CIFIC CON-DUCT-ANCE (MICRO-MHOS)	PH (UNITS)	TEMPER-ATURE (DEG C)
OCT.										
07...	.7	948	944	1.29	385	231	3.8	1480	7.9	24.0
14...	.7	930	926	1.26	380	222	3.7	1440	8.1	23.5
21...	.6	890	894	1.21	375	226	3.5	1400	7.9	24.0
28...	.7	974	972	1.32	390	226	4.0	1530	7.9	20.5
NOV.										
04...	.6	1060	1050	1.44	410	236	4.3	1660	7.9	18.5
11...	.6	960	957	1.31	385	226	3.9	1500	7.9	18.5
18...	.6	928	922	1.26	380	224	3.7	1450	8.0	20.5
25...	.6	998	995	1.36	395	231	4.0	1570	8.0	16.5
DEC.										
02...	.7	1020	1020	1.39	405	244	4.1	1600	8.0	15.5
09...	.6	954	954	1.30	390	228	3.7	1490	8.0	13.5
16...	.6	1020	1020	1.39	405	241	4.1	1600	8.0	12.0
23...	.5	956	958	1.30	390	232	3.9	1520	7.9	15.0
30...	.5	960	960	1.31	390	226	3.9	1520	7.9	11.0
JAN.										
06...	.5	856	858	1.16	370	224	3.3	1350	7.9	8.5
13...	.5	892	895	1.21	380	224	3.5	1410	7.9	17.0
20...	.5	890	891	1.21	380	226	3.5	1400	7.8	11.5
27...	.5	900	897	1.22	380	228	3.5	1410	7.9	12.0
FEB.										
03...	.5	858	863	1.17	375	228	3.3	1360	7.9	15.5
10...	.5	894	895	1.22	380	230	3.5	1410	8.0	14.0
17...	.5	950	946	1.29	390	228	3.7	1490	7.9	13.5
24...	.4	1010	1000	1.37	395	230	4.2	1580	7.9	16.5
MAR.										
03...	.4	964	955	1.31	390	230	3.8	1510	7.9	15.5
10...	.5	892	863	1.21	375	221	3.3	1360	8.0	16.0
17...	.5	908	907	1.23	380	224	3.6	1430	8.0	18.5
24...	.5	902	904	1.23	380	221	3.6	1430	8.0	15.5
31...	.5	864	853	1.18	370	218	3.3	1340	8.0	14.0
APR.										
07...	.7	1000	998	1.36	400	240	4.0	1580	8.0	16.5
14...	.5	874	869	1.19	385	228	3.2	1370	8.0	19.0
21...	.6	922	918	1.25	385	222	3.7	1450	7.9	19.5
28...	.6	862	858	1.17	375	221	3.3	1350	7.9	20.0
MAY										
05...	.7	870	867	1.18	380	224	3.2	1370	8.1	23.0
12...	.6	864	861	1.18	375	221	3.3	1350	8.0	23.5
19...	.5	842	839	1.15	370	222	3.2	1320	8.1	23.0
26...	.5	846	842	1.15	375	222	3.1	1320	8.0	--
JUNE										
02...	.5	876	867	1.19	380	222	3.2	1370	8.0	26.5
09...	.6	848	843	1.15	375	224	3.2	1330	8.1	23.5
16...	.6	922	899	1.25	385	228	3.4	1420	7.9	--
23...	.6	884	866	1.20	380	226	3.2	1370	8.0	26.0
30...	.7	866	863	1.18	380	226	3.2	1360	7.9	26.0
JULY										
07...	.7	870	866	1.18	380	224	3.2	1370	8.0	--
14...	.5	874	854	1.19	370	218	3.3	1350	8.0	30.0
21...	.5	858	849	1.17	365	214	3.3	1340	8.1	28.5
28...	.5	868	862	1.18	375	221	3.3	1360	8.0	--
AUG.										
04...	.6	846	836	1.15	365	219	3.2	1320	8.2	29.5
11...	.5	876	878	1.19	380	229	3.4	1380	8.1	30.0
18...	.7	868	870	1.18	375	224	3.4	1370	8.0	28.0
25...	.6	878	878	1.19	375	224	3.4	1380	7.9	29.0
SEP.										
01...	.6	858	856	1.17	365	219	3.3	1350	8.0	28.0
09...	.5	892	891	1.21	375	222	3.5	1410	7.9	29.0
15...	.6	916	914	1.25	385	228	3.6	1440	8.0	28.5
22...	.6	884	873	1.20	375	228	3.4	1380	7.9	26.5
29...	.6	854	852	1.16	365	222	3.3	1350	8.0	25.5

09521100 COLORADO RIVER BELOW YUMA MAIN CANAL WASTEWAY, AT YUMA, ARIZ.

LOCATION.--Lat 32°43'54", long 114°37'55", in SW¼SW¼ sec.26, T.16 S., R.22 E., San Bernardino meridian, in California, Imperial County, on right bank 1,000 ft (305 m) downstream from Yuma Main Canal wasteway, 0.6 mi (1.0 km) downstream from former gaging station on Colorado River at Yuma, 1.1 mi (1.8 km) northwest of post office in Yuma, 5.2 mi (8.4 km) downstream from Gila River, and 6.4 mi (10.3 km) upstream from northerly international boundary.

DRAINAGE AREA.--242,900 mi^2 (629,100 km^2), approximately, including all closed basins entirely within the drainage boundary.

PERIOD OF RECORD.--October 1963 to current year. If records for Yuma Main Canal wasteway at Yuma (sta 09525000) and Reservation Main Drain No. 4 (sta 09530000) are subtracted from records at this station, records equivalent to those published 1902-64 as "Colorado River at Yuma" (sta 09521000) can be obtained.

GAGE.--Water-stage recorder. Datum of gage is 101.99 ft (31.087 m) above mean sea level.

AVERAGE DISCHARGE.--12 years, 843 ft^3/s (23.87 m^3/s), 610,800 acre-ft/yr (753 hm^3/yr).

EXTREMES.--Current year: Maximum discharge, 2,150 ft^3/s (60.9 m^3/s) Apr. 13 (gage height, 12.70 ft or 3.871 m); minimum daily, 453 ft^3/s (12.8 m^3/s) Feb. 19.
Period of record: Maximum discharge, 5,040 ft^3/s (143 m^3/s) Mar. 3, 1970 (gage height, 15.05 ft or 4.587 m); minimum daily, 260 ft^3/s (7.36 m^3/s) Jan. 17, 1970.
Maximum gage height since at least 1878, 34.0 ft (10.4 m) Jan. 22, 1916 (discharge, 250,000 ft^3/s or 7,080 m^3/s), at former gaging station at Yuma.

REMARKS.--Records excellent above 1,000 ft^3/s (28.3 m^3/s) and good below. Natural flow of stream affected by transmountain diversions, storage reservoirs, power developments, ground-water withdrawals and diversions for irrigation, municipal and industrial uses, and return flows from irrigated areas.

DISCHARGE, IN CUBIC FEET PER SECOND, WATER YEAR OCTOBER 1974 TO SEPTEMBER 1975
MEAN VALUES

DAY	OCT	NOV	DEC	JAN	FEB	MAR	APR	MAY	JUN	JUL	AUG	SEP
1	601	616	642	1320	1050	480	630	560	1590	577	584	603
2	612	625	834	1270	1100	496	633	559	1560	594	591	601
3	604	627	957	1270	1070	492	594	566	1550	587	643	600
4	591	615	946	1300	1040	476	588	573	1530	881	1040	615
5	580	615	923	1280	1100	472	879	574	1450	567	857	616
6	574	637	913	1280	1110	484	883	563	626	541	688	779
7	581	628	952	1270	1100	493	790	633	595	552	680	811
8	605	643	920	1280	1100	488	659	692	647	638	664	793
9	592	640	956	1280	1150	484	657	702	1510	888	670	740
10	619	629	1160	1070	1390	556	978	831	1520	879	670	690
11	597	634	1270	987	1170	598	1850	1460	1520	766	649	648
12	601	624	1360	999	1230	599	2070	1350	1520	612	644	637
13	614	636	1270	998	1190	576	2090	1330	1580	609	633	617
14	609	630	1270	1040	1210	593	1320	1340	1510	614	623	552
15	622	630	1260	997	1210	594	753	1330	1460	612	619	540
16	642	610	877	934	1210	604	814	1210	605	611	596	625
17	620	652	571	936	1210	608	1060	1180	602	606	610	1530
18	632	561	556	935	463	588	814	1200	616	611	605	1480
19	649	585	556	915	453	584	675	1430	603	619	610	1510
20	635	614	545	907	458	587	652	1480	551	617	610	1480
21	640	614	566	820	508	596	654	1470	531	617	638	1290
22	673	622	566	814	508	714	636	1570	524	613	822	1310
23	652	635	572	782	508	710	610	1500	522	580	821	1300
24	656	622	557	797	508	630	616	1540	518	577	803	1230
25	654	619	571	803	508	605	614	1540	531	598	738	1250
26	654	621	551	782	488	599	625	1580	542	563	622	1230
27	659	642	533	794	480	578	623	1530	818	543	613	1160
28	670	624	553	802	480	592	607	1500	854	573	623	1150
29	714	612	564	796	---	600	603	1540	593	581	610	1190
30	721	578	566	794	---	600	594	1480	563	619	623	1210
31	694	---	630	754	---	700	---	1600	---	583	628	---
TOTAL	19567	18640	24967	31006	25002	17776	25571	36413	29141	19428	20827	28787
MEAN	631	621	805	1000	893	573	852	1175	971	627	672	960
MAX	721	652	1360	1320	1390	714	2090	1600	1590	888	1040	1530
MIN	574	561	533	754	453	472	588	559	518	541	584	540
AC-FT	38810	36970	49520	61500	49590	35260	50720	72230	57800	38540	41310	57100

CAL YR 1974 TOTAL 281586 MEAN 771 MAX 1830 MIN 299 AC-FT 558500
WTR YR 1975 TOTAL 297125 MEAN 814 MAX 2090 MIN 453 AC-FT 589300

09522000 COLORADO RIVER AT NORTHERLY INTERNATIONAL BOUNDARY ABOVE MORELOS DAM, NEAR ANDRADE, CALIF.

LOCATION.--Lat 32°43'07", long 114°43'05", in NE¼SE¼ sec.21, T.8 S., R.24 W., Gila and Salt River meridian, in Arizona, Yuma County, on left bank at northerly international boundary, 0.5 mi (0.8 km) east of Andrade, 1.1 mi (1.8 km) upstream from Morelos Dam, 1.1 mi (1.8 km) downstream from Rockwood Gate, and 6.4 mi (10.3 km) downstream from gaging station on Colorado River below Yuma Main Canal wasteway.

DRAINAGE AREA.--243,000 mi² (629,400 km²), approximately, including all closed basins entirely within the drainage boundary.

PERIOD OF RECORD.--January 1950 to current year. Prior to October 1958 published as "at international boundary."

GAGE.--Water-stage recorder. Datum of gage is at mean sea level. Supplementary water-stage recorder 1,680 ft (510 m) upstream at same datum.

EXTREMES.--Current year: Maximum discharge, 5,760 ft³/s (163 m³/s) Apr. 11; maximum elevation, 108.70 ft (33.132 m) Apr. 11; minimum discharge, 674 ft³/s (19.1 m³/s) Oct. 1; minimum elevation, 101.98 ft (31.084 m) Oct. 1.

Period of record: Maximum discharge, 25,390 ft³/s (719 m³/s) Jan. 1, 1953; maximum elevation, 114.24 ft (34.820 m) Jan. 28, 1958; minimum discharge, 495 ft³/s (14.0 m³/s) Sept. 28, 1970; minimum elevation, 101.82 ft (31.035 m) Sept. 18, 1971.

REMARKS.--This record shows water passing northerly international boundary. Minor diversions to the United States below this station by pumping from ground water for irrigation in the floodway between river and Yuma levee.

COOPERATION.--Records furnished by International Boundary and Water Commission, U.S. Section (monthly summary figures rounded in accordance with Geological Survey standard practice).

DISCHARGE, IN CUBIC FEET PER SECOND, WATER YEAR OCTOBER 1974 TO SEPTEMBER 1975

DAY	OCT	NOV	DEC	JAN	FEB	MAR	APR	MAY	JUN	JUL	AUG	SEP
1	771	752	752	1,450	1,160	2,000	3,020	2,390	1,710	2,400	2,800	2,020
2	753	752	898	1,450	1,280	1,960	3,330	2,110	1,710	2,400	2,800	2,050
3	753	752	1,040	1,420	1,270	1,780	3,400	2,120	1,710	2,480	2,770	2,020
4	744	752	1,090	1,450	1,210	1,790	3,390	2,120	1,710	2,510	2,790	2,030
5	726	743	1,050	1,450	1,260	1,770	3,400	2,190	1,710	2,490	2,760	2,030
6	717	770	1,030	1,440	1,240	1,800	3,320	2,100	1,810	2,490	2,770	2,020
7	717	752	1,070	1,420	1,260	1,810	3,250	2,080	1,760	2,490	2,770	2,030
8	735	761	1,050	1,440	1,240	1,800	3,250	2,100	1,800	2,600	2,790	1,990
9	735	770	1,060	1,450	1,280	1,860	3,710	2,100	1,640	2,590	2,790	1,970
10	735	761	1,210	1,260	1,520	2,170	4,670	1,890	1,680	2,640	2,790	1,960
11	726	770	1,360	1,120	1,380	2,420	5,450	1,630	1,660	2,640	2,770	1,840
12	726	761	1,450	1,150	1,360	2,490	4,280	1,450	1,640	2,620	2,760	1,860
13	735	761	1,450	1,150	1,370	2,480	3,940	1,450	1,720	2,750	2,790	1,820
14	735	761	1,410	1,180	1,360	2,480	3,210	1,410	1,700	2,840	2,660	1,670
15	726	770	1,400	1,160	1,370	2,490	2,970	1,450	1,700	2,840	2,590	1,670
16	753	761	1,650	1,080	1,360	2,460	2,980	1,330	1,940	2,850	2,610	1,680
17	735	775	1,730	1,080	1,630	2,480	2,950	1,320	1,940	2,860	2,570	1,520
18	735	709	1,720	1,080	1,710	2,450	2,980	1,310	1,930	2,870	2,460	1,600
19	753	725	1,720	1,060	1,710	2,450	2,970	1,510	1,930	2,840	2,480	1,630
20	753	752	1,700	1,070	1,750	2,490	2,970	1,600	1,930	2,840	2,490	1,620
21	744	761	1,710	975	1,790	2,720	2,870	1,590	2,010	2,870	2,370	1,440
22	762	752	1,710	955	1,960	2,720	2,880	1,660	2,030	2,860	2,380	1,450
23	753	770	1,710	935	2,170	2,710	2,860	1,660	2,030	2,830	2,380	1,450
24	753	761	1,710	945	2,140	2,720	2,870	1,640	2,080	2,840	2,380	1,400
25	753	761	1,770	965	2,180	2,720	2,860	1,670	2,080	2,830	2,290	1,410
26	735	752	1,900	955	2,310	2,760	2,770	1,700	2,120	2,800	2,300	1,410
27	744	779	1,860	945	2,290	2,750	2,770	1,670	2,110	2,790	2,320	1,340
28	753	761	1,880	975	2,280	2,720	2,720	1,640	2,100	2,790	2,320	1,320
29	790	756	1,960	975	------	2,710	2,720	1,630	2,110	2,760	2,350	1,360
30	800	709	1,900	975	------	2,710	2,660	1,630	2,220	2,770	2,380	1,410
31	780	------	1,800	902	------	2,700	------	1,690	------	2,840	2,370	------
TOTAL	23,130	22,672	45,750	35,862	44,840	73,370	97,420	53,840	56,220	84,020	79,850	51,020
MEAN	746	756	1,476	1,157	1,601	2,367	3,247	1,737	1,874	2,710	2,576	1,701
MAX	800	779	1,960	1,450	2,310	2,760	5,450	2,390	2,220	2,870	2,800	2,050
MIN	717	709	752	902	1,160	1,770	2,660	1,310	1,640	2,400	2,290	1,320
AC-FT	45,880	44,970	90,750	71,130	88,940	145,500	193,200	106,800	111,500	166,700	158,400	101,200

CAL YR 1974 TOTAL 673,746 MEAN 1,846 MAX 3,370 MIN 709 AC-FT 1,336,000
WTR YR 1975 TOTAL 667,994 MEAN 1,830 MAX 5,450 MIN 709 AC-FT 1,325,000

09522000 COLORADO RIVER AT NORTHERLY INTERNATIONAL BOUNDARY, ABOVE MORELOS DAM, NEAR ANDRADE, CALIF.--Continued

PERIOD OF RECORD.--Chemical analyses: October 1968 to current year.
Specific conductance: October 1969 to current year.

EXTREMES.--Current year:
Specific conductance: Maximum daily, 1,970 micromhos Nov. 5; minimum daily, 1,300 micromhos Apr. 11.

WATER QUALITY DATA, WATER YEAR OCTOBER 1974 TO SEPTEMBER 1975

DATE	TIME	INSTANTANEOUS DISCHARGE (CFS)	DISSOLVED SILICA (SIO2) (MG/L)	TOTAL IRON (FE) (UG/L)	DISSOLVED IRON (FE) (UG/L)	TOTAL MANGANESE (MN) (UG/L)	DISSOLVED MANGANESE (MN) (UG/L)	TOTAL CALCIUM (CA) (MG/L)	DISSOLVED CALCIUM (CA) (MG/L)	TOTAL MAGNESIUM (MG) (MG/L)	DISSOLVED MAGNESIUM (MG) (MG/L)	TOTAL SODIUM (NA) (MG/L)
OCT.												
07...	0810	726	11	--	--	--	--	--	114	--	40	--
09...	0830	735	--	240	--	--	--	--	--	--	--	--
15...	0800	735	13	--	--	--	--	--	116	--	39	--
21...	0800	726	14	--	--	--	--	--	114	--	40	--
22...	0840	800	--	200	--	--	--	--	--	--	--	--
29...	0810	790	12	--	--	--	--	--	121	--	38	--
NOV.												
04...	0815	750	13	--	--	--	--	--	120	--	41	--
05...	0815	743	--	270	20	150	60	770	--	320	--	190
11...	0830	770	14	--	--	--	--	--	118	--	40	--
18...	0820	707	13	--	--	--	--	--	113	--	40	--
19...	0930	725	--	280	--	--	--	--	--	--	--	--
25...	0845	755	11	--	--	--	--	--	119	--	39	--
DEC.												
02...	0840	885	14	--	--	--	--	--	118	--	38	--
03...	0830	1020	--	280	--	--	--	--	--	--	--	--
09...	0850	1050	14	--	--	--	--	--	113	--	38	--
16...	0850	1710	11	--	--	--	--	--	105	--	37	--
17...	0905	1750	--	250	--	--	--	--	--	--	--	--
23...	0900	1710	12	--	--	--	--	--	107	--	36	--
30...	0800	1880	11	--	--	--	--	--	103	--	36	--
JAN.												
06...	0850	1440	11	--	--	--	--	--	102	--	37	--
07...	0855	1435	--	350	--	--	--	--	--	--	--	--
13...	0830	1140	12	--	--	--	--	--	110	--	34	--
20...	0845	1060	10	--	--	--	--	--	103	--	38	--
21...	0845	985	--	510	--	--	--	--	--	--	--	--
27...	0845	935	12	--	--	--	--	--	110	--	35	--
FEB.												
03...	0830	1270	11	--	--	--	--	--	103	--	36	--
10...	0845	1530	10	--	--	--	--	--	106	--	35	--
11...	0900	1380	--	390	10	58	30	96	--	35	--	170
18...	0840	1710	9.0	--	--	--	--	--	106	--	35	--
24...	0800	2140	10	--	--	--	--	--	103	--	37	--
25...	0835	2160	--	830	--	--	--	--	--	--	--	--
MAR.												
03...	0840	1770	11	--	--	--	--	--	106	--	35	--
10...	0830	2200	11	--	--	--	--	--	106	--	35	--
11...	0830	2450	--	670	--	--	--	--	--	--	--	--
17...	0845	2480	10	--	--	--	--	--	106	--	35	--
24...	0830	2720	10	--	--	--	--	--	103	--	35	--
25...	0830	2740	--	850	--	--	--	--	--	--	--	--
31...	0830	2950	10	--	--	--	--	--	104	--	36	--
APR.												
07...	0830	3220	11	--	--	--	--	--	103	--	35	--
08...	0945	3290	--	930	--	--	--	--	--	--	--	--
14...	0830	3780	10	--	--	--	--	--	102	--	35	--
21...	0815	2860	9.0	--	--	--	--	--	102	--	35	--
22...	0850	2880	--	440	--	--	--	--	--	--	--	--
28...	0820	2670	9.0	--	--	--	--	--	102	--	35	--
MAY												
05...	0830	2160	10	--	--	--	--	--	106	--	34	--
06...	0805	2110	--	0	20	80	20	97	--	33	--	160
12...	0845	1440	11	--	--	--	--	--	110	--	33	--
19...	0830	1470	11	--	--	--	--	--	110	--	33	--
20...	0830	1600	--	660	--	--	--	--	--	--	--	--
27...	0830	1700	9.0	--	--	--	--	--	104	--	35	--
JUNE												
02...	0845	1750	9.0	--	--	--	--	--	106	--	34	--
09...	0845	1630	10	--	--	--	--	--	103	--	35	--
10...	0830	1700	--	530	--	--	--	--	--	--	--	--
16...	0830	1890	10	--	--	--	--	--	109	--	32	--
23...	0830	2020	11	--	--	--	--	--	105	--	35	--
24...	0830	2100	--	430	--	--	--	--	--	--	--	--
30...	0830	2100	10	--	--	--	--	--	103	--	35	--

09522000 COLORADO RIVER AT NORTHERLY INTERNATIONAL BOUNDARY, ABOVE MORELOS DAM, NEAR ANDRADE, CALIF.--Continued

EXTREMES.--Continued
Period of record:
Specific conductance: Maximum daily, 2,230 micromhos Dec. 9, 1969; minimum daily, 1,300 micromhos Apr. 11, 1975.

REMARKS.--Unpublished chemical analyses for water years 1962-68 available in district office at Tucson, Ariz.

WATER QUALITY DATA, WATER YEAR OCTOBER 1974 TO SEPTEMBER 1975

DATE	DIS-SOLVED SODIUM (NA) (MG/L)	TOTAL PO-TAS-SIUM (K) (MG/L)	DIS-SOLVED PO-TAS-SIUM (K) (MG/L)	BICAR-BONATE (HCO3) (MG/L)	CAR-BONATE (CO3) (MG/L)	DIS-SOLVED SULFATE (SO4) (MG/L)	DIS-SOLVED CHLO-RIDE (CL) (MG/L)	DIS-SOLVED FLUO-RIDE (F) (MG/L)	DIS-SOLVED NITRITE PLUS NITRATE (N) (MG/L)	DIS-SOLVED ORTHO. PHOS-PHORUS (P) (MG/L)	DIS-SOLVED SOLIDS (RESI-DUE AT 180 C) (MG/L)	DIS-SOLVED SOLIDS (SUM OF CONSTI-TUENTS) (MG/L)
OCT.												
07...	215	--	7.2	230	0	415	220	.7	--	--	1160	1140
09...	--	--	--	--	--	--	--	--	.85	.11	--	--
15...	215	--	7.1	234	0	410	222	.7	--	--	1150	1140
21...	220	--	7.1	224	0	410	228	.7	--	--	1160	1150
22...	--	--	--	--	--	--	--	--	.23	.07	--	--
29...	225	--	6.9	234	0	420	235	.7	--	--	1180	1180
NOV.												
04...	240	--	7.3	242	0	430	255	.7	--	--	1230	1230
05...	--	4.1	--	--	--	--	--	--	.34	.11	--	--
11...	230	--	7.5	234	0	420	240	.6	--	--	1210	1190
18...	225	--	6.8	232	0	410	230	.6	--	--	1170	1150
19...	--	--	--	--	--	--	--	--	.31	.07	--	--
25...	230	--	7.0	236	0	420	235	.7	--	--	1190	1180
DEC.												
02...	225	--	6.9	236	0	425	218	.7	--	--	1170	1160
03...	--	--	--	--	--	--	--	--	.21	.06	--	--
09...	210	--	7.2	220	0	405	215	.6	--	--	1120	1110
16...	190	--	6.7	202	0	385	190	.6	--	--	1030	1030
17...	--	--	--	--	--	--	--	--	.29	.02	--	--
23...	190	--	6.2	210	--	385	190	.6	--	--	1040	1030
30...	185	--	6.4	200	--	380	180	.5	--	--	1010	1000
JAN.												
06...	185	--	6.4	200	0	380	178	.6	--	--	1000	999
07...	--	--	--	--	--	--	--	--	.16	.01	--	--
13...	190	--	5.9	212	0	385	185	.5	--	--	1030	1030
20...	185	--	5.6	210	0	385	180	.5	--	--	1010	1010
21...	--	--	--	--	--	--	--	--	.31	.06	--	--
27...	195	--	5.7	212	0	385	195	.5	--	--	1050	1040
FEB.												
03...	180	--	6.4	200	0	380	175	.5	--	--	1000	991
10...	185	--	6.1	204	0	380	180	.5	--	--	1010	1000
11...	--	4.8	--	--	--	--	--	--	.36	.02	--	--
18...	185	--	6.4	204	0	380	178	.5	--	--	1010	1000
24...	175	--	5.6	200	0	375	172	.5	--	--	980	977
25...	--	--	--	--	--	--	--	--	.20	.04	--	--
MAR.												
03...	185	--	6.2	204	0	380	178	.5	--	--	1000	1000
10...	175	--	6.4	204	0	375	170	.5	--	--	990	979
11...	--	--	--	--	--	--	--	--	.24	.03	--	--
17...	180	--	5.6	204	0	375	175	.5	--	--	994	987
24...	165	--	5.5	196	0	360	165	.5	--	--	944	941
25...	--	--	--	--	--	--	--	--	.23	.05	--	--
31...	170	--	5.9	198	0	360	170	.5	--	--	958	954
APR.												
07...	165	--	6.1	196	0	355	165	.6	--	--	954	938
08...	--	--	--	--	--	--	--	--	.26	.01	--	--
14...	155	--	6.1	194	0	370	140	.5	--	--	920	915
21...	165	--	5.6	194	0	355	165	.6	--	--	938	933
22...	--	--	--	--	--	--	--	--	.24	.07	--	--
28...	165	--	5.9	196	0	355	165	.6	--	--	950	935
MAY												
05...	165	--	5.9	202	0	365	162	.7	--	--	954	949
06...	--	4.6	--	--	--	--	--	--	.26	.04	--	--
12...	185	--	6.4	206	0	380	180	.6	--	--	1010	1010
19...	185	--	5.9	206	0	380	180	.6	--	--	1010	1010
20...	--	--	--	--	--	--	--	--	.22	.04	--	--
27...	175	--	6.0	204	0	370	168	.5	--	--	972	968
JUNE												
02...	180	--	6.2	206	0	375	175	.5	--	--	988	987
09...	175	--	6.2	202	0	370	168	.6	--	--	974	967
10...	--	--	--	--	--	--	--	--	.16	.05	--	--
16...	180	--	6.6	206	0	375	170	.6	--	--	992	985
23...	170	--	5.8	204	0	370	165	.6	--	--	982	963
24...	--	--	--	--	--	--	--	--	.18	.03	--	--
30...	165	--	6.3	196	0	360	162	.7	--	--	948	939

09522000 COLORADO RIVER AT NORTHERLY INTERNATIONAL BOUNDARY, ABOVE MORELOS DAM, NEAR ANDRADE, CALIF.--Continued

WATER QUALITY DATA, WATER YEAR OCTOBER 1974 TO SEPTEMBER 1975

DATE	TIME	INSTANTANEOUS DISCHARGE (CFS)	DISSOLVED SILICA (SIO2) (MG/L)	TOTAL IRON (FE) (UG/L)	DISSOLVED IRON (FE) (UG/L)	TOTAL MANGANESE (MN) (UG/L)	DISSOLVED MANGANESE (MN) (UG/L)	TOTAL CALCIUM (CA) (MG/L)	DISSOLVED CALCIUM (CA) (MG/L)	TOTAL MAGNESIUM (MG) (MG/L)	DISSOLVED MAGNESIUM (MG) (MG/L)	TOTAL SODIUM (NA) (MG/L)
JULY												
07...	0830	2440	10	--	--	--	--	--	106	--	33	--
08...	1000	2590	--	310	--	--	--	--	--	--	--	--
14...	0840	2860	9.0	--	--	--	--	--	99	--	35	--
21...	0830	2830	10	--	--	--	--	--	98	--	35	--
22...	0815	2900	--	320	--	--	--	--	--	--	--	--
28...	0830	2760	11	--	--	--	--	--	101	--	34	--
AUG.												
04...	0830	2810	11	--	--	--	--	--	98	--	38	--
05...	0840	2830	--	170	10	50	10	73	--	33	--	150
11...	0830	2750	11	--	--	--	--	--	100	--	34	--
18...	0900	2444	11	--	--	--	--	--	101	--	34	--
19...	--	2440	--	220	--	--	--	--	--	--	--	--
25...	0815	2250	12	--	--	--	--	--	100	--	35	--
SEP.												
02...	0915	2050	11	--	--	--	--	--	99	--	35	--
08...	0830	1960	13	--	--	--	--	--	99	--	36	--
09...	0900	2020	--	340	--	--	--	--	--	--	--	--
15...	0845	1708	12	--	--	--	--	--	100	--	39	--
22...	0830	1450	12	--	--	--	--	--	106	--	35	--
23...	0830	1460	--	590	--	--	--	--	--	--	--	--
29...	0830	1360	12	--	--	--	--	--	102	--	35	--

DATE	DISSOLVED SODIUM (NA) (MG/L)	TOTAL POTASSIUM (K) (MG/L)	DISSOLVED POTASSIUM (K) (MG/L)	BICARBONATE (HCO3) (MG/L)	CARBONATE (CO3) (MG/L)	DISSOLVED SULFATE (SO4) (MG/L)	DISSOLVED CHLORIDE (CL) (MG/L)	DISSOLVED FLUORIDE (F) (MG/L)	DISSOLVED NITRITE PLUS NITRATE (N) (MG/L)	DISSOLVED ORTHO. PHOSPHORUS (P) (MG/L)	DISSOLVED SOLIDS (RESIDUE AT 180 C) (MG/L)	DISSOLVED SOLIDS (SUM OF CONSTITUENTS) (MG/L)
JULY												
07...	170	--	6.0	194	0	365	165	.6	--	--	960	952
08...	--	--	--	--	--	--	--	--	.20	.00	--	--
14...	160	--	6.0	188	0	355	155	.5	--	--	914	912
21...	155	--	6.5	188	0	355	150	.5	--	--	912	903
22...	--	--	--	--	--	--	--	--	--	--	--	--
28...	155	--	6.2	188	0	355	150	.5	--	--	910	906
AUG.												
04...	165	--	6.1	196	0	360	162	.6	--	--	944	938
05...	--	5.5	--	--	--	--	--	--	.14	.03	--	--
11...	160	--	6.1	184	0	355	158	.5	--	--	922	916
18...	155	--	5.6	184	0	355	150	.7	--	--	906	903
19...	--	--	--	--	--	--	--	--	--	--	--	--
25...	170	--	5.8	194	0	365	165	.6	--	--	954	949
SEP.												
02...	160	--	6.0	186	0	355	155	.5	--	--	912	914
08...	170	--	6.2	190	0	365	165	.6	--	--	954	949
09...	--	--	--	--	--	--	--	--	.16	.02	--	--
15...	180	--	5.9	204	0	380	175	.5	--	--	1020	992
22...	185	--	6.4	206	0	380	180	.6	--	--	1020	1010
23...	--	--	--	--	--	--	--	--	--	--	--	--
29...	180	--	6.1	196	0	375	175	.6	--	--	986	983

09522000 COLORADO RIVER AT NORTHERLY INTERNATIONAL BOUNDARY, ABOVE MORELOS DAM, NEAR ANDRADE, CALIF.--Continued

WATER QUALITY DATA, WATER YEAR OCTOBER 1974 TO SEPTEMBER 1975

DATE	DIS-SOLVED SOLIDS (TONS PER AC-FT)	HARD-NESS (CA,MG) (MG/L)	NON-CAR-BONATE HARD-NESS (MG/L)	SODIUM AD-SORP-TION RATIO	SPE-CIFIC CON-DUCT-ANCE (MICRO-MHOS)	PH (UNITS)	TEMPER-ATURE (DEG C)	TUR-BID-ITY (JTU)	TUR-BID-ITY (NTU)	DIS-SOLVED OXYGEN (MG/L)	CHEM-ICAL OXYGEN DEMAND (HIGH LEVEL) (MG/L)
OCT.											
07...	1.58	450	262	4.4	1790	8.0	24.0	1	--	--	--
09...	--	--	--	--	1700	8.2	25.0	--	--	7.9	15
15...	1.56	450	258	4.4	1800	8.0	--	1	--	--	--
21...	1.58	450	266	4.5	1810	7.9	23.0	1	--	--	--
22...	--	--	--	--	--	--	22.5	--	--	--	13
29...	1.60	460	268	4.6	1860	8.0	--	3	--	--	--
NOV.											
04...	1.67	470	272	4.8	1950	8.0	15.5	1	--	--	--
05...	--	--	--	--	1990	7.8	16.5	--	--	8.2	20
11...	1.65	460	268	4.7	1880	7.9	--	1	--	--	--
18...	1.59	445	255	4.6	1820	8.1	18.0	1	--	--	--
19...	--	--	--	--	--	--	18.5	--	--	--	14
25...	1.62	455	262	4.7	1860	8.0	17.0	1	--	--	--
DEC.											
02...	1.59	450	260	4.6	1820	8.0	16.0	1	--	--	--
03...	--	--	--	--	1820	7.8	14.5	--	--	9.4	21
09...	1.52	440	260	4.4	1760	8.0	14.0	1	--	--	--
16...	1.40	415	250	4.1	1630	8.0	11.0	1	--	--	--
17...	--	--	--	--	--	--	14.0	--	--	--	19
23...	1.41	415	243	4.1	1620	8.0	11.5	3	--	--	--
30...	1.37	405	241	4.0	1580	8.0	12.0	2	--	--	--
JAN.											
06...	1.36	405	240	4.0	1570	8.0	10.5	1	--	--	--
07...	--	--	--	--	1590	7.9	10.0	--	--	9.0	13
13...	1.40	415	240	4.1	1630	8.0	--	2	--	--	--
20...	1.37	415	240	4.0	1600	7.9	11.5	2	--	--	--
21...	--	--	--	--	--	--	13.0	--	--	--	5
27...	1.43	420	250	4.1	1650	8.0	13.0	2	--	--	--
FEB.											
03...	1.36	405	241	3.9	1570	7.9	--	--	1	--	--
10...	1.37	410	240	4.0	1590	8.0	13.0	--	1	--	--
11...	--	--	--	--	1610	--	13.5	--	--	8.6	13
18...	1.37	410	240	4.0	1580	8.0	--	--	2	--	--
24...	1.33	410	250	3.8	1540	8.0	15.0	--	2	--	--
25...	--	--	--	--	1560	--	12.0	--	--	--	16
MAR.											
03...	1.36	410	240	4.0	1580	8.0	--	--	2	--	--
10...	1.35	410	240	3.8	1550	8.0	--	--	1	--	--
11...	--	--	--	--	1570	--	16.0	--	--	8.6	7
17...	1.35	410	240	3.9	1560	8.0	15.0	--	2	--	--
24...	1.28	400	240	3.6	1490	8.0	16.0	--	1	--	--
25...	--	--	--	--	--	--	16.0	--	--	--	6
31...	1.30	405	240	3.7	1510	8.1	--	--	2	--	--
APR.											
07...	1.30	400	240	3.6	1480	8.0	13.5	--	1	--	--
08...	--	--	--	--	1500	7.7	15.5	--	--	8.5	13
14...	1.25	400	240	3.4	1440	8.0	19.0	--	1	--	--
21...	1.28	400	240	3.6	1470	8.1	21.0	--	2	--	--
22...	--	--	--	--	--	--	19.0	--	--	--	10
28...	1.29	400	240	3.6	1470	8.1	20.0	--	1	--	--
MAY											
05...	1.30	405	240	3.6	1500	8.1	--	--	1	--	--
06...	--	--	--	--	1490	--	19.0	--	--	8.1	10
12...	1.37	410	240	4.0	1590	8.0	20.5	--	2	--	--
19...	1.37	410	240	4.0	1590	8.0	--	--	1	--	--
20...	--	--	--	--	--	--	21.0	--	--	--	11
27...	1.32	405	240	3.8	1530	8.0	--	--	2	--	--
JUNE											
02...	1.34	405	240	3.9	1560	8.1	27.0	--	2	--	--
09...	1.32	400	230	3.8	1530	8.1	25.5	--	2	--	--
10...	--	--	--	--	1500	7.7	25.0	--	--	6.6	7
16...	1.35	405	240	3.9	1550	8.0	26.0	--	1	--	--
23...	1.34	405	240	3.7	1520	8.0	25.0	--	1	--	--
24...	--	--	--	--	--	--	24.5	--	--	--	11
30...	1.29	400	240	3.6	1490	8.0	--	--	1	--	--
JULY											
07...	1.31	400	241	3.7	1500	8.1	28.0	--	1	--	--
08...	--	--	--	--	1780	7.9	27.0	--	--	7.3	12
14...	1.24	390	236	3.5	1440	8.0	29.0	--	1	--	--
21...	1.24	390	236	3.4	1430	8.1	--	--	2	--	--
22...	--	--	--	--	--	--	28.0	--	--	--	8
28...	1.24	390	236	3.4	1430	8.0	29.0	--	4	--	--
AUG.											
04...	1.28	400	240	3.6	1480	8.1	29.5	--	8	--	--
05...	--	--	--	--	1430	8.2	--	--	--	6.7	6
11...	1.25	390	239	3.5	1450	8.1	--	--	4	--	--
18...	1.23	390	239	3.4	1430	8.1	--	--	3	--	--
19...	--	--	--	--	--	--	24.0	--	--	--	11
25...	1.30	395	236	3.7	1500	8.0	28.0	--	4	--	--
SEP.											
02...	1.24	390	238	3.5	1440	8.0	26.5	--	3	--	--
08...	1.30	395	239	3.7	1500	8.1	--	--	8	--	--
09...	--	--	--	--	1500	8.0	27.0	--	--	6.7	12
15...	1.39	410	242	3.9	1570	8.1	--	--	4	--	--
22...	1.39	410	241	4.0	1590	8.0	25.0	--	10	--	--
23...	--	--	--	--	--	--	24.5	--	--	--	8
29...	1.34	400	240	3.9	1560	8.1	--	--	6	--	--

09522000 COLORADO RIVER AT NORTHERLY INTERNATIONAL BOUNDARY, ABOVE MORELOS DAM, NEAR ANDRADE, CALIF.--Continued

WATER QUALITY DATA, WATER YEAR OCTOBER 1974 TO SEPTEMBER 1975

DATE	TIME	TOTAL NITRATE (N) (MG/L)	DIS-SOLVED NITRATE (N) (MG/L)	TOTAL NITRITE (N) (MG/L)	DIS-SOLVED NITRITE (N) (MG/L)	TOTAL NITRITE PLUS NITRATE (N) (MG/L)	AMMONIA NITRO-GEN (N) (MG/L)
OCT.							
09...	0830	.34	--	.01	.01	.35	.31
22...	0840	.24	.22	.08	.01	.32	.27
NOV.							
05...	0815	.30	--	.03	.02	.33	.44
19...	0930	.31	.29	.01	.02	.32	.12
DEC.							
03...	0830	.22	--	.01	.01	.23	.08
17...	0905	.32	.29	.00	.00	.32	.04
JAN.							
07...	0855	.21	--	.01	.00	.22	.09
21...	0845	.27	.30	.10	.01	.37	.16
FEB.							
11...	0900	.37	--	.01	.00	.38	.01
25...	0835	.20	.19	.01	.01	.21	.14
MAR.							
11...	0830	.23	--	.01	.01	.24	.13
25...	0830	.18	.16	.07	.07	.25	.08
APR.							
08...	0945	.27	--	.00	.01	.27	.06
22...	0850	.21	.23	.01	.01	.22	.12
MAY							
06...	0805	.25	--	.01	.00	.26	.08
20...	0830	.21	.21	.01	.01	.22	.05
JUNE							
10...	0830	.15	--	.01	.01	.16	.02
24...	0830	.17	.16	.02	.02	.19	.08
JULY							
08...	1000	.21	--	.01	.00	.22	.05
22...	0815	.15	--	.01	--	.16	.08
AUG.							
05...	0840	.13	--	.01	.01	.14	.03
19...	--	.07	--	.01	--	.08	.00
SEP.							
09...	0900	.15	--	.01	.01	.16	.00
23...	0830	.24	--	.03	--	.27	.04

DATE	TOTAL ORGANIC NITRO-GEN (N) (MG/L)	TOTAL KJEL-DAHL NITRO-GEN (N) (MG/L)	TOTAL NITRO-GEN (N) (MG/L)	TOTAL NITRO-GEN (NO3) (MG/L)	TOTAL PHOS-PHORUS (P) (MG/L)	DIS-SOL-VED-PHOS-PHORUS (P) (MG/L)
OCT.						
09...	.21	.52	.87	3.9	.18	--
22...	.45	.72	1.0	4.6	.11	--
NOV.						
05...	.44	.88	1.2	5.4	.14	.11
19...	.36	.48	.80	3.5	.14	--
DEC.						
03...	.13	.21	.44	1.9	.13	--
17...	.21	.25	.57	2.5	.06	--
JAN.						
07...	.35	.44	.66	2.9	.08	--
21...	.41	.57	.94	4.2	.09	--
FEB.						
11...	.39	.40	.78	3.5	.08	.08
25...	.47	.61	.82	3.6	.07	--
MAR.						
11...	.22	.35	.59	2.6	.06	--
25...	.12	.20	.45	2.0	.08	--
APR.						
08...	.23	.29	.56	2.5	.06	--
22...	.22	.34	.56	2.5	.05	--
MAY						
06...	.09	.17	.43	1.9	.06	.04
20...	.25	.30	.52	2.3	.06	--
JUNE						
10...	.07	.09	.25	1.1	.06	--
24...	.44	.52	.71	3.1	.04	--
JULY						
08...	.57	.62	.84	3.7	.04	--
22...	.22	.30	.46	2.0	.07	--
AUG.						
05...	.27	.30	.44	1.9	.06	.04
19...	.32	.32	.40	1.8	.06	--
SEP.						
09...	.43	.43	.59	2.6	.09	--
23...	.61	.65	.92	4.1	.07	--

09522000 COLORADO RIVER AT NORTHERLY INTERNATIONAL BOUNDARY, ABOVE MORELOS DAM, NEAR ANDRADE, CALIF.--Continued

WATER QUALITY DATA, WATER YEAR OCTOBER 1974 TO SEPTEMBER 1975

DATE	TIME	TOTAL PHYTO-PLANK-TON (CELLS PER ML)	TOTAL SESTON (MG/L)	SESTON ASH WEIGHT (MG/L)	PERI-PHYTON BIOMASS ASH WEIGHT G/SQ M	PERI-PHYTON BIOMASS TOTAL DRY WEIGHT G/SQ M	UNCOR-RECTED PERI-PHYTON CHLORO-PHYLL A MG/SQ M
OCT.							
09...	0830	8300	--	--	--	--	--
22...	0840	--	--	--	--	--	--
NOV.							
05...	0815	11000	--	--	3.10	--	7.20
19...	0930	--	--	--	--	--	--
DEC.							
03...	0830	6600	--	--	--	--	--
17...	0905	--	--	--	--	--	--
JAN.							
07...	0855	500	--	--	--	--	--
21...	0845	--	--	--	--	--	--
FEB.							
11...	0900	2600	--	--	8.90	14.0	34.0
25...	0835	--	--	--	--	--	--
MAR.							
11...	0830	--	--	--	--	--	--
25...	0830	--	--	--	--	--	--
APR.							
08...	0945	880	--	--	--	--	--
22...	0850	--	--	--	--	--	--
MAY							
06...	0805	1600	--	--	64.0	74.0	83.0
20...	0830	--	--	--	--	--	--
JUNE							
10...	0830	4200	--	--	--	--	--
24...	0830	--	--	--	--	--	--
JULY							
08...	1000	--	.0	.0	--	--	--
22...	0815	--	--	--	--	--	--
AUG.							
05...	0840	--	.0	.0	--	--	--
19...	--	--	--	--	--	--	--
SEP.							
09...	0900	--	.0	.0	--	--	--
23...	0830	--	--	--	--	--	--

DATE	UNCOR-RECTED PERI-PHYTON CHLORO-PHYLL B MG/SQ M	CHLORO-PHYLL A (UG/L)	CHLORO-PHYLL B (UG/L)	FECAL COLI-FORM (COL. PER 100 ML)	STREP-TOCOCCI (COL-ONIES PER 100 ML)	TOTAL ORGANIC CARBON (C) (MG/L)
OCT.						
09...	--	1.90	.700	100	110	4.3
22...	--	--	--	--	--	4.4
NOV.						
05...	1.90	4.10	.000	540	6600	3.9
19...	--	--	--	--	--	4.7
DEC.						
03...	--	3.60	2.90	200	100	4.7
17...	--	--	--	--	--	4.1
JAN.						
07...	--	1.10	.000	37	176	3.1
21...	--	--	--	--	--	4.3
FEB.						
11...	8.90	.000	.000	110	140	3.2
25...	--	--	--	--	--	6.1
MAR.						
11...	--	3.00	1.80	61	92	3.3
25...	--	--	--	--	--	2.7
APR.						
08...	--	3.40	3.40	B16	48	5.9
22...	--	--	--	--	--	3.1
MAY						
06...	15.0	2.20	2.40	--	--	3.6
20...	--	--	--	--	--	3.6
JUNE						
10...	--	5.20	4.30	130	400	3.0
24...	--	--	--	--	--	3.2
JULY						
08...	--	2.30	1.40	37	B400	4.4
22...	--	--	--	--	--	4.0
AUG.						
05...	--	1.50	3.50	70	86	4.3
19...	--	--	--	--	--	4.1
SEP.						
09...	--	3.50	2.40	460	210	7.8
23...	--	--	--	--	--	10

09522000 COLORADO RIVER AT NORTHERLY INTERNATIONAL BOUNDARY, ABOVE MORELOS DAM, NEAR ANDRADE, CALIF.--Continued

WATER QUALITY DATA, WATER YEAR OCTOBER 1974 TO SEPTEMBER 1975

DATE	TIME	INSTANTANEOUS DISCHARGE (CFS)	TOTAL ALDRIN (UG/L)	TOTAL CHLORDANE (UG/L)	TOTAL DDD (UG/L)	TOTAL DDE (UG/L)	TOTAL DDT (UG/L)	TOTAL DIAZINON (UG/L)	TOTAL DIELDRIN (UG/L)	TOTAL ENDRIN (UG/L)	TOTAL ETHION (UG/L)	TOTAL HEPTACHLOR (UG/L)
OCT.												
09...	0830	735	.00	.0	.00	.00	.00	.00	.00	.00	--	.00
NOV.												
05...	0815	743	.00	.0	.00	.00	.00	.00	.00	.00	.00	.00
DEC.												
03...	0830	1020	.00	.0	.00	.00	.00	.00	.00	.00	.00	.00
JAN.												
07...	0855	1435	.00	.0	.00	.00	.00	.00	.00	.00	.00	.00
FEB.												
11...	0900	1380	.00	.0	.00	.00	.00	.00	.00	.00	.00	.00
MAR.												
11...	0830	2450	ND	ND	ND	ND	ND	ND	ND	ND	ND	ND
APR.												
08...	0945	3290	.00	.0	.00	.00	.00	.00	.00	.00	--	.00
MAY												
06...	0805	2110	.00	.0	.00	.00	.00	.00	.00	.00	--	.00
JUNE												
10...	0830	1700	.00	.0	.00	.00	.00	.00	.00	.00	--	.00
JULY												
05...	0840	--	ND	ND	ND	ND	ND	ND	ND	ND	ND	ND
08...	1000	2590	.00	.0	.00	.00	.00	.00	.00	.00	--	.00
AUG.												
05...	0840	2830	.00	.0	.00	.00	.00	.00	.00	.00	.00	.00
SEP.												
09...	0900	2020	.00	.0	.00	.00	.00	.00	.00	.00	.00	.00

DATE	TOTAL HEPTACHLOR EPOXIDE (UG/L)	TOTAL LINDANE (UG/L)	TOTAL MALATHION (UG/L)	TOTAL METHYL PARATHION (UG/L)	TOTAL METHYL TRITHION (UG/L)	TOTAL PARATHION (UG/L)	TOTAL PCB (UG/L)	TOTAL TOXAPHENE (UG/L)	TOTAL TRITHION (UG/L)	TOTAL 2,4-D (UG/L)	TOTAL 2,4,5-T (UG/L)	TOTAL SILVEX (UG/L)
OCT.												
09...	.00	.00	.00	.01	--	.03	.0	0	--	.04	.00	.00
NOV.												
05...	.00	.00	.00	.00	.00	.00	.0	0	.00	.07	.00	.00
DEC.												
03...	.00	.00	.00	.00	.00	.00	.0	0	.00	.06	.00	.00
JAN.												
07...	.00	.00	.00	.00	.00	.00	.0	0	.00	.00	.00	.00
FEB.												
11...	.00	.00	.00	.00	.00	.00	.0	0	.00	.00	.00	.00
MAR.												
11...	ND	ND	ND	ND	ND	ND	.0	ND	ND	.02	.00	.00
APR.												
08...	.00	.00	.00	.00	--	.00	.0	0	--	.00	.00	.00
MAY												
06...	.00	.00	.00	.00	--	.00	.0	0	--	.00	.00	.00
JUNE												
10...	.00	.00	.00	.00	--	.00	.0	0	--	.00	.00	.00
JULY												
05...	ND	ND	ND	ND	ND	ND	--	ND	ND	--	--	--
08...	.00	.00	.00	.00	--	.00	.0	0	--	.00	.00	.00
AUG.												
05...	.00	.00	.00	.00	.00	.00	.0	0	.00	.00	.00	.00
SEP.												
09...	.00	.00	.00	.00	.00	.00	.0	0	.00	.26	.00	.00

ND Material specifically analyzed for but not detected.

09522000 COLORADO RIVER AT NORTHERLY INTERNATIONAL BOUNDARY, ABOVE MORELOS DAM, NEAR ANDRADE, CALIF.--Continued

WATER QUALITY DATA, WATER YEAR OCTOBER 1974 TO SEPTEMBER 1975

DATE	TIME	TOTAL ARSENIC (AS) (UG/L)	DIS-SOLVED ARSENIC (AS) (UG/L)	DIS-SOLVED BORON (B) (UG/L)	TOTAL CAD-MIUM (CD) (UG/L)	DIS-SOLVED CAD-MIUM (CD) (UG/L)	TOTAL CHRO-MIUM (CR) (UG/L)	DIS-SOLVED CHRO-MIUM (CR) (UG/L)	TOTAL COBALT (CO) (UG/L)	DIS-SOLVED COBALT (CO) (UG/L)
OCT.										
09...	0830	--	--	260	--	--	--	--	--	--
22...	0840	--	--	390	--	--	--	--	--	--
NOV.										
05...	0815	6	6	360	<10	0	0	0	<50	0
19...	0930	--	--	340	--	--	--	--	--	--
DEC.										
03...	0830	--	--	360	--	--	--	--	--	--
17...	0905	--	--	290	--	--	--	--	--	--
JAN.										
07...	0855	--	--	240	--	--	--	--	--	--
21...	0845	--	--	260	--	--	--	--	--	--
FEB.										
11...	0900	1	0	230	<10	0	10	0	50	1
25...	0835	--	--	240	--	--	--	--	--	--
MAR.										
11...	0830	--	--	240	--	--	--	--	--	--
25...	0830	--	--	220	--	--	--	--	--	--
APR.										
08...	0945	--	--	220	--	--	--	--	--	--
22...	0850	--	--	210	--	--	--	--	--	--
MAY										
06...	0805	3	3	220	10	0	0	10	50	2
20...	0830	--	--	250	--	--	--	--	--	--
JUNE										
10...	0830	--	--	250	--	--	--	--	--	--
24...	0830	--	--	220	--	--	--	--	--	--
JULY										
08...	1000	--	--	170	--	--	--	--	--	--
AUG.										
05...	0840	1	1	210	<10	0	0	0	0	1
SEP.										
09...	0900	--	--	230	--	--	--	--	--	--

DATE	TOTAL COPPER (CU) (UG/L)	DIS-SOLVED COPPER (CU) (UG/L)	TOTAL LEAD (PB) (UG/L)	DIS-SOLVED LEAD (PB) (UG/L)	TOTAL MERCURY (HG) (UG/L)	DIS-SOLVED MERCURY (HG) (UG/L)	TOTAL SELE-NIUM (SE) (UG/L)	DIS-SOLVED SELE-NIUM (SE) (UG/L)	DIS-SOLVED ZINC (ZN) (UG/L)
OCT.									
09...	--	--	--	--	--	--	--	--	--
22...	--	--	--	--	--	--	--	--	--
NOV.									
05...	<10	0	<100	9	.0	.0	3	3	60
19...	--	--	--	--	--	--	--	--	--
DEC.									
03...	--	--	--	--	--	--	--	--	--
17...	--	--	--	--	--	--	--	--	--
JAN.									
07...	--	--	--	--	--	--	--	--	--
21...	--	--	--	--	--	--	--	--	--
FEB.									
11...	280	1	<100	1	.0	.0	3	3	20
25...	--	--	--	--	--	--	--	--	--
MAR.									
11...	--	--	--	--	--	--	--	--	--
25...	--	--	--	--	--	--	--	--	--
APR.									
08...	--	--	--	--	--	--	--	--	--
22...	--	--	--	--	--	--	--	--	--
MAY									
06...	10	1	<100	0	.0	.0	3	2	0
20...	--	--	--	--	--	--	--	--	--
JUNE									
10...	--	--	--	--	--	--	--	--	--
24...	--	--	--	--	--	--	--	--	--
JULY									
08...	--	--	--	--	--	--	--	--	--
AUG.									
05...	10	1	<100	0	.0	.0	4	4	10
SEP.									
09...	--	--	--	--	--	--	--	--	--

09522000 COLORADO RIVER AT NORTHERLY INTERNATIONAL BOUNDARY, ABOVE MORELOS DAM, NEAR ANDRADE, CALIF.--Continued

SPECIFIC CONDUCTANCE (MICROMHOS/CM AT 25 DEG. C), WATER YEAR OCTOBER 1974 TO SEPTEMBER 1975
(ONCE-DAILY)

DAY	OCT	NOV	DEC	JAN	FEB	MAR	APR	MAY	JUN	JUL	AUG	SEP
1	1900	1910	1860	1550	1570	1450	1450	1490	1570	1450	1460	1490
2	1760	1930	1820	1590	1530	1570	1480	1500	1560	1500	1510	1440
3	1760	1930	1840	1580	1570	1580	1430	1500	1550	1490	1500	1440
4	1760	1950	1790	1550	1580	1540	1440	1500	1580	1510	1480	1450
5	1750	1970	1790	1550	1610	1530	1480	1500	1560	1530	1480	1430
6	1770	1940	1800	1570	1630	1500	1470	1490	1560	1530	1470	1450
7	1790	1890	1770	1600	1630	1540	1480	1520	1540	1500	1470	1520
8	1780	1860	1780	1580	1640	1540	1480	1500	1580	1460	1460	1500
9	1760	1900	1760	1640	1640	1530	1490	1490	1530	1440	1450	1520
10	1780	1870	1750	1670	1590	1550	1440	1530	1530	1450	1490	1510
11	1780	1880	1810	1650	1620	1530	1300	1540	1510	1470	1450	1540
12	1780	1890	1730	1640	1550	1500	1360	1590	1520	1440	1440	1510
13	1800	1880	1660	1630	1540	1540	1430	1560	1490	1470	1440	1540
14	1810	1850	1660	1590	1560	1570	1440	1610	1500	1440	1450	1560
15	1800	1860	1650	1580	1600	1570	1540	1570	1560	1430	1420	1570
16	1790	1810	1630	1620	1590	1600	1590	1600	1550	1430	1410	1540
17	1780	1670	1640	1600	1560	1560	1570	1610	1540	1430	1420	1570
18	1780	1820	1620	1560	1580	1580	1550	1610	1540	1430	1430	1590
19	1760	1840	1620	1590	1590	1560	1460	1590	1520	1450	1430	1530
20	1780	1830	1610	1600	1580	1520	1480	1550	1510	1440	1420	1520
21	1810	1790	1630	1650	1550	1490	1470	1540	1510	1430	1430	1580
22	1770	1800	1640	1650	1550	1480	1460	1560	1550	1460	1460	1590
23	1780	1840	1620	1640	1560	1520	1450	1560	1520	1410	1480	1550
24	1800	1850	1650	1630	1540	1490	1480	1560	1510	1420	1510	1560
25	1790	1860	---	1620	1560	1480	1480	1560	1520	1440	1500	1530
26	1800	1880	1710	1640	1500	1470	1490	1550	1500	1410	1470	1530
27	1790	1870	1650	1650	1490	1460	1500	1530	1510	1440	1480	1560
28	1840	1840	1610	1640	1490	1490	1470	1520	1500	1430	1470	1570
29	1860	1850	1610	1610	---	1500	1450	1520	1530	1430	1480	1560
30	1860	1880	1580	1580	---	1490	1450	1540	1490	1430	1510	1560
31	1860	---	1560	1600	---	1510	---	1550	---	1420	1500	---
MONTH	1790	1860	1700	1610	1570	1520	1470	1540	1530	1450	1460	1530

09522500 GILA GRAVITY MAIN CANAL AT IMPERIAL DAM, ARIZ.-CALIF.

LOCATION.--Lat 32°52'34", long 114°27'18", in SE¼SW¼ sec.30, T.6 S., R.21 W., Gila and Salt River meridian, Yuma County, on right bank 3,200 ft (975 m) downstream from intake at east end of Imperial Dam.

PERIOD OF RECORD.--August 1943 to current year.

GAGE.--Water-stage recorder. Datum of gage is 160.00 ft (48.768 m) above mean sea level.

AVERAGE DISCHARGE.--16 years (1959-75), 1,215 ft^3/s (34.41 m^3/s), 880,300 acre-ft/yr (1,090 hm^3/yr).

EXTREMES.--Period of record: Maximum daily discharge, 2,240 ft^3/s (63.4 m^3/s) May 25, 1965; no flow at canal intake at times in several years when intake gates were closed.

REMARKS.--Records excellent except those below 100 ft^3/s (2.8 m^3/s), which are fair. Gila Gravity Main Canal diverts water from Colorado River at left end of Imperial Dam for irrigation of lands in the Gila Project area in Arizona. Diversions to this canal began Aug. 17, 1943. Diversions to North Gila Valley from this canal began Aug. 17, 1943. Diversions to North Gila Valley from this canal began Dec. 16, 1954. During the 1974 calendar year, water was used for irrigation of 102,728 acres (416 km^2) divided as follows: North and South Gila Valleys, 16,196 acres (65.5 km^2); Yuma Mesa Division, 18,452 acres (74.7 km^2); Wellton-Mohawk Division, 64,884 acres (263 km^2); Yuma Mesa Auxiliary Division, 3,196 acres (12.9 km^2).

DISCHARGE, IN CUBIC FEET PER SECOND, WATER YEAR OCTOBER 1974 TO SEPTEMBER 1975
MEAN VALUES

DAY	OCT	NOV	DEC	JAN	FEB	MAR	APR	MAY	JUN	JUL	AUG	SEP
1	1380	567	0	368	617	1030	1730	1920	937	1870	1850	1540
2	1650	508	0	530	590	927	1800	1850	1710	2020	1360	1890
3	1460	479	0	589	652	1420	1700	1340	1770	1980	1270	1950
4	1450	831	0	477	948	1660	1610	1420	1910	1750	1870	1970
5	1160	672	0	426	1020	1540	1590	1560	1830	1540	2000	1950
6	921	944	0	482	916	1450	1260	1880	1770	1190	2030	1890
7	1240	890	142	555	714	1130	1750	1910	1680	1910	2060	1550
8	1480	824	768	738	709	872	1750	1840	1430	1950	2060	1800
9	1700	571	986	856	430	686	1500	1510	1640	2020	1960	1560
10	1170	404	1460	735	857	843	1310	1390	1780	1970	1470	1660
11	1260	892	1130	472	1070	1060	947	1070	1790	1980	1910	1350
12	879	872	993	544	995	887	699	1800	1430	1730	2010	1510
13	653	1100	854	681	1130	853	596	1870	1550	1250	2030	1230
14	1010	1090	763	914	788	753	1190	1990	1430	1540	2030	702
15	1360	814	652	755	629	480	1530	1850	1040	1720	2010	1510
16	1370	764	1030	573	592	493	1640	1890	1630	1830	1820	1870
17	1350	888	1160	468	959	1060	1610	1630	1680	1920	1610	2000
18	1000	893	1340	514	1020	1310	1390	1420	1720	1950	1980	2020
19	802	1090	1070	464	1220	1240	1390	1730	1760	1770	2040	1770
20	695	1170	1050	850	1150	1410	1050	1630	1620	1420	2030	1320
21	1150	1250	623	1010	1240	1260	1520	1940	1620	1720	1930	975
22	1160	1020	727	1170	909	940	1690	1810	1220	1880	1700	1540
23	1020	847	744	1010	895	915	1770	1680	1600	2020	1670	1620
24	733	1000	565	964	1410	1370	1810	1380	1950	2010	1570	1900
25	421	1270	187	846	1270	1610	1770	942	1800	1710	1890	1730
26	438	1310	632	636	1200	1770	1530	1480	1800	1300	1920	1640
27	392	867	592	919	1510	1410	1520	1580	1710	1120	1870	1150
28	711	49	659	966	1280	1240	1760	1580	1360	1670	1910	1060
29	1000	10	517	1090	---	976	1930	1580	1220	1760	1910	1460
30	806	4.9	800	991	---	717	2040	1340	1570	1820	1830	1350
31	846	---	634	966	---	1540	---	1170	---	1810	1420	---
TOTAL	32667	23890.9	20078	22559	26720	34852	45382	49982	47957	54130	57020	47467
MEAN	1054	796	648	728	954	1124	1513	1612	1599	1746	1839	1582
MAX	1700	1310	1460	1170	1510	1770	2040	1990	1950	2020	2060	2020
MIN	392	4.9	0	368	430	480	596	942	937	1120	1270	702
AC-FT	64790	47390	39820	44750	53000	69130	90020	99140	95120	107400	113100	94150

CAL YR 1974 TOTAL 473271.9 MEAN 1297 MAX 2180 MIN 0 AC-FT 938700
WTR YR 1975 TOTAL 462704.9 MEAN 1268 MAX 2060 MIN 0 AC-FT 917800

09522500 GILA GRAVITY MAIN CANAL AT IMPERIAL DAM, ARIZ.-CALIF.--Continued

PERIOD OF RECORD.--Chemical analyses: October 1967 to current year (partial-record station).
Water temperatures: January 1956 to current year.

EXTREMES.--Current year:
Water temperatures: Maximum, 30.5°C July 11, 12; minimum, 9.0°C on several days during December and January.
Period of record:
Water temperatures: Maximum, 33.0°C Aug. 29-31, 1970; minimum, 7.0°C on several days in 1964 and 1971.

REMARKS.--Temperature probe above water surface Nov. 28 to Dec. 7. Unpublished chemical analyses (partial-record) for water years 1965-67 available in district office at Tucson, Ariz.

WATER QUALITY DATA, WATER YEAR OCTOBER 1974 TO SEPTEMBER 1975

DATE	TIME	INSTANTANEOUS DISCHARGE (CFS)	DISSOLVED SILICA (SIO2) (MG/L)	DISSOLVED IRON (FE) (UG/L)	DISSOLVED CALCIUM (CA) (MG/L)	DISSOLVED MAGNESIUM (MG) (MG/L)	DISSOLVED SODIUM (NA) (MG/L)	DISSOLVED POTASSIUM (K) (MG/L)	BICARBONATE (HCO3) (MG/L)	CARBONATE (CO3) (MG/L)	DISSOLVED SULFATE (SO4) (MG/L)	DISSOLVED CHLORIDE (CL) (MG/L)
OCT.												
09...	1220	1730	11	20	93	32	120	5.7	171	--	310	110
JAN.												
08...	1330	747	11	10	97	32	160	5.6	190	--	330	150
APR.												
02...	1405	1918	8.8	10	95	32	130	6.6	176	--	350	110
JULY												
01...	1040	1850	8.3	10	92	33	130	5.6	174	0	330	110

DATE	DISSOLVED FLUORIDE (F) (MG/L)	DISSOLVED NITRITE PLUS NITRATE (N) (MG/L)	DISSOLVED SOLIDS (RESIDUE AT 180 C) (MG/L)	DISSOLVED SOLIDS (SUM OF CONSTITUENTS) (MG/L)	DISSOLVED SOLIDS (TONS PER AC-FT)	HARDNESS (CA,MG) (MG/L)	NONCARBONATE HARDNESS (MG/L)	SODIUM ADSORPTION RATIO	SPECIFIC CONDUCTANCE (MICROMHOS)	PH (UNITS)	TEMPERATURE (DEG C)	DISSOLVED BORON (B) (UG/L)
OCT.												
09...	.4	.18	849	767	1.15	360	220	2.7	1290	--	25.0	160
JAN.												
08...	.4	.27	947	881	1.29	370	220	3.6	1390	--	10.0	200
APR.												
02...	.3	.19	835	821	1.14	370	220	2.9	1270	--	14.5	220
JULY												
01...	.4	.15	843	796	1.15	370	230	3.0	1280	8.2	26.0	180

TEMPERATURE (DEG. C) OF WATER, WATER YEAR OCTOBER 1974 TO SEPTEMBER 1975

	OCTOBER		NOVEMBER		DECEMBER		JANUARY		FEBRUARY		MARCH	
DAY	MAX	MIN	MAX	MIN	MAX	MIN	MAX	MIN	MAX	MIN	MAX	MIN
1	27.0	26.5	18.0	18.0	---	---	9.0	9.0	11.0	11.0	14.5	14.0
2	26.5	26.0	18.0	18.0	---	---	9.0	9.0	11.0	11.0	15.5	14.5
3	26.5	26.0	18.0	18.0	---	---	9.0	9.0	11.0	11.0	15.5	15.5
4	26.0	26.0	18.0	18.0	---	---	9.0	9.0	11.0	11.0	15.5	15.5
5	26.0	25.0	18.0	18.0	---	---	9.5	9.5	11.0	11.0	15.5	15.5
6	25.5	25.0	18.0	18.0	---	---	9.5	9.5	11.0	11.0	15.5	14.5
7	24.5	23.5	18.0	18.0	---	---	10.0	9.5	11.0	11.0	15.0	14.5
8	24.5	24.0	18.0	18.0	13.0	13.0	10.0	10.0	11.0	11.5	15.0	14.5
9	25.5	24.5	18.0	18.0	13.0	13.0	10.0	10.0	12.0	11.5	15.0	15.0
10	25.5	25.0	18.0	18.0	13.0	13.0	10.0	10.0	13.0	12.0	14.5	14.0
11	25.0	24.5	18.0	18.0	13.0	12.5	10.0	10.0	13.5	13.0	14.0	14.0
12	24.5	24.0	18.0	18.0	12.5	12.5	10.0	10.0	13.5	13.5	14.0	14.0
13	24.5	23.5	18.0	18.0	13.0	12.5	10.0	10.0	13.5	13.5	14.5	14.0
14	23.5	23.5	18.0	18.0	13.0	12.5	10.0	10.0	13.5	13.5	14.5	14.5
15	23.5	23.5	18.0	18.0	13.0	12.5	10.0	10.0	13.5	13.5	14.5	14.0
16	23.5	23.5	18.0	18.0	13.0	13.0	10.0	10.0	13.5	13.5	14.5	14.5
17	23.5	23.5	18.5	18.0	13.0	13.0	10.0	10.0	13.5	13.5	14.5	14.5
18	23.5	23.5	18.5	18.5	13.0	12.5	10.0	10.0	13.5	13.5	14.5	14.5
19	23.5	23.5	18.5	18.5	13.0	13.0	11.0	10.5	14.0	13.5	15.0	14.5
20	23.5	23.5	18.5	18.5	13.0	13.0	11.0	11.0	13.5	13.5	15.5	15.0
21	23.5	23.5	18.5	18.5	13.0	13.0	11.0	11.0	13.5	13.5	15.5	15.5
22	23.5	23.5	18.5	18.5	13.0	13.0	11.0	11.0	13.5	13.0	15.5	15.5
23	23.5	23.0	18.5	18.5	13.0	12.5	11.0	11.0	13.0	13.0	15.0	15.0
24	23.0	23.0	18.0	17.0	12.0	11.5	11.0	11.0	13.0	13.0	15.0	15.0
25	23.0	23.0	18.0	16.5	11.0	10.0	11.0	11.0	13.5	13.0	15.5	15.0
26	23.0	22.0	16.5	16.5	9.0	9.0	11.0	11.0	14.5	13.5	15.0	14.5
27	22.0	21.5	16.5	16.5	9.0	9.0	11.0	11.0	15.0	14.0	14.5	14.5
28	21.5	21.0	---	---	9.0	9.0	11.0	11.0	13.5	13.5	15.0	14.0
29	21.0	19.5	---	---	9.0	9.0	11.0	11.0	---	---	14.0	13.5
30	19.5	18.5	---	---	9.0	9.0	11.0	11.0	---	---	14.0	13.5
31	18.5	18.5	---	---	9.0	9.0	11.0	11.0	---	---	14.0	13.5
MONTH	27.0	18.5	18.5	16.5	---	---	11.0	9.0	15.0	11.0	15.5	13.5

09522500 GILA GRAVITY MAIN CANAL AT IMPERIAL DAM, ARIZ.-CALIF.--Continued

TEMPERATURE (DEG. C) OF WATER, WATER YEAR OCTOBER 1974 TO SEPTEMBER 1975

	APRIL		MAY		JUNE		JULY		AUGUST		SEPTEMBER	
DAY	MAX	MIN	MAX	MIN	MAX	MIN	MAX	MIN	MAX	MIN	MAX	MIN
1	14.0	13.5	20.0	19.5	26.0	25.5	26.5	26.0	29.0	28.5	27.0	26.5
2	14.5	14.0	20.5	20.0	26.0	26.0	26.5	26.0	29.0	29.0	28.5	27.0
3	15.0	14.5	21.5	20.5	26.0	25.5	27.5	26.5	29.5	29.0	28.5	28.0
4	15.5	15.0	21.5	21.0	26.0	25.5	28.0	27.0	29.5	29.0	28.5	28.0
5	16.0	15.5	21.0	19.5	26.0	25.5	29.0	28.0	30.0	29.5	29.0	28.0
6	16.0	16.0	19.5	19.5	25.5	25.5	29.0	29.0	30.0	30.0	28.5	28.0
7	16.0	15.5	19.5	19.5	26.0	25.5	29.0	28.5	30.0	29.5	28.0	28.0
8	15.5	15.0	20.5	19.5	26.0	25.5	29.0	28.5	30.0	30.0	28.0	28.0
9	15.0	14.5	21.5	20.5	26.0	25.5	29.5	28.5	30.0	30.0	28.5	28.0
10	14.5	14.0	22.0	21.0	26.0	25.5	30.0	29.5	30.0	29.5	28.5	28.0
11	15.0	14.5	23.5	22.0	27.0	26.0	30.5	30.0	30.0	29.5	28.5	28.0
12	16.0	15.0	24.0	23.5	27.0	26.5	30.5	29.5	29.5	28.5	28.0	28.0
13	18.0	16.5	24.0	23.5	27.0	27.0	29.5	29.0	29.0	28.5	28.0	28.0
14	18.0	17.0	24.0	23.5	28.0	27.0	29.5	28.5	28.5	28.0	28.0	28.0
15	18.0	17.0	24.0	24.0	28.0	28.0	29.5	29.0	28.5	28.0	28.0	28.0
16	18.0	17.0	24.0	23.5	28.0	27.0	29.5	29.0	28.0	28.0	28.5	28.0
17	18.5	18.0	24.0	24.0	27.0	26.5	29.0	28.5	28.0	27.5	28.5	28.0
18	18.5	18.0	24.0	23.5	26.5	24.5	29.0	28.0	28.0	26.5	28.5	28.0
19	18.5	18.0	23.5	23.5	24.5	24.0	29.0	28.5	27.0	26.5	28.0	28.0
20	19.0	18.5	23.5	22.0	24.0	23.0	29.0	28.5	27.0	27.0	28.0	28.0
21	19.0	18.5	22.0	20.5	24.5	23.0	29.0	28.5	28.0	27.0	28.0	28.0
22	19.0	19.0	20.5	20.5	25.0	24.5	29.0	29.0	28.0	27.5	28.0	26.0
23	19.0	19.0	21.5	20.5	26.0	25.0	29.0	29.0	28.5	28.0	26.0	25.5
24	19.0	19.0	23.5	21.5	26.0	25.5	29.5	29.0	28.5	28.0	25.5	25.0
25	19.0	19.0	24.0	23.5	26.0	25.5	30.0	29.0	28.0	28.0	25.5	25.0
26	19.0	18.5	24.5	24.0	26.0	25.5	30.0	29.5	28.0	28.0	25.5	25.5
27	18.5	18.5	24.5	24.5	26.5	25.5	30.0	29.5	28.0	27.0	25.5	25.5
28	19.0	18.5	24.5	24.5	26.5	26.0	29.5	29.0	27.0	26.5	25.5	25.5
29	19.0	19.0	24.5	24.0	26.5	26.5	29.0	29.0	27.0	26.0	25.5	25.5
30	19.5	19.0	24.5	24.0	26.5	26.5	29.5	29.0	26.5	26.0	25.5	25.5
31	---	---	25.5	24.5	---	---	29.5	29.0	26.5	26.0	---	---
MONTH	19.5	13.5	25.5	19.5	28.0	23.0	30.5	26.0	30.0	26.0	29.0	25.0

09523000 ALL-AMERICAN CANAL NEAR IMPERIAL DAM, ARIZ.-CALIF.

LOCATION.--Lat 32°52'17", long 114°28'47", in SE¼NW¼ sec.17, T.15 S., R.24 E., San Bernardino meridian, in California, Imperial County, on left bank 6,000 ft (1,829 m) downstream from intake at west end of Imperial Dam, and 13.7 mi (22.0 km) upstream from turnout to Yuma Main Canal.

PERIOD OF RECORD.--October 1938 to current year. Prior to October 1939 monthly discharge only, published in WSP 1313.

GAGE.--Water-stage recorder. Datum of gage is 150.00 ft (45.720 m) above mean sea level (subject to undetermined changes caused by earthquake of May 18, 1940). Since Aug. 21, 1952, auxiliary water-stage recorder 18.5 mi (29.8 km) downstream from base gage.

AVERAGE DISCHARGE.--34 years (1941-75), 6,945 ft^3/s (196.7 m^3/s), 5,032,000 acre-ft/yr (6,200 hm^3/yr).

EXTREMES.--Period of record: Maximum daily discharge, 13,500 ft^3/s (382 m^3/s) Apr. 16, 1938; no flow at times.

REMARKS.--Records excellent. All-American Canal diverts water from Colorado River at Imperial Dam. Water is used for power development and for irrigation in Yuma, Coachella, and Imperial Valleys. Water can be released back to the river through Pilot Knob powerplant and wasteway for power, regulatory purposes, or for downstream use in Mexico. First diversion to All-American Canal began October 1938, but prior to October 1940 was used only for priming canal.

COOPERATION.--Gage-height record furnished by Imperial Irrigation District.

DISCHARGE, IN CUBIC FEET PER SECOND, WATER YEAR OCTOBER 1974 TO SEPTEMBER 1975

DAY	OCT	NOV	DEC	JAN	FEB	MAR	APR	MAY	JUN	JUL	AUG	SEP
1	6070	3530	2850	4210	4590	6800	9230	9820	6770	7910	8720	8300
2	6200	3660	3460	4760	3580	6230	9820	9490	7000	8090	8690	8410
3	6420	3560	3730	4620	4040	6730	9940	9510	7230	8170	7850	8680
4	6600	3810	3530	4400	3890	6790	9920	9230	7750	7250	7680	8840
5	6310	3980	2770	3590	3930	6720	9510	9170	7900	7600	8070	9000
6	6210	4100	2900	2790	3750	7030	9290	9090	8140	7670	8570	8670
7	6170	4190	2360	3100	3850	6950	9420	9120	7820	7790	8800	7500
8	6050	4330	2310	3210	3970	6940	9860	8930	7360	8470	9160	7130
9	6170	4320	2350	3320	4230	6730	8490	8840	6290	8290	9120	6880
10	6190	4140	2740	3360	4700	6980	7680	8760	6470	8490	9000	7120
11	5810	3930	2990	4050	4480	6750	7660	7800	6770	8300	8970	6590
12	5700	4010	3140	3770	4880	6460	5660	8110	6910	8530	9320	6990
13	5350	4580	3330	4070	5040	6710	5390	8340	6810	8650	9230	6830
14	5220	4640	3470	4230	5170	6060	6230	8770	6610	8670	9190	6630
15	5210	4420	3440	4400	5180	6100	7120	8560	6550	8790	9100	7120
16	5370	4020	3850	4630	5180	6220	8050	8390	6950	8860	9220	7480
17	5620	3610	3940	4440	5380	6570	8540	8220	7130	8920	8910	7210
18	5510	3510	4060	4320	6000	6780	9110	7760	7410	8770	8560	7250
19	5360	3470	4460	3920	5880	7360	9510	7650	7440	8700	8730	7150
20	4890	3780	4510	3900	6310	8300	9690	7920	7520	8520	8990	6900
21	4970	3760	4370	4090	6290	8810	9750	7990	7480	8510	8470	6620
22	4980	4050	4620	4200	6870	9140	9930	8020	7130	8800	8290	6880
23	4930	3640	4490	4400	6810	8780	9980	7450	6900	9110	8010	7030
24	4690	3440	4230	4400	6650	9250	10200	7390	7420	9170	7490	7340
25	4220	3290	3550	4580	7220	9580	10100	6680	7660	8660	7270	7280
26	3770	3500	4200	4420	7310	9590	10000	6690	7690	8670	7770	7240
27	3640	3570	5130	4880	7390	9740	9910	6910	7510	8660	8310	7160
28	3920	3170	5280	4990	6970	9650	9860	7080	7430	8910	8500	6750
29	4000	2880	5270	5270	---	9000	10100	7240	7450	8970	8280	6770
30	4200	2940	5230	5300	---	8300	10100	7180	7800	8750	8010	6930
31	4110	---	5330	4880	---	8960	---	7150	---	8970	8250	---
TOTAL	163860	113830	117890	130500	149540	236010	270050	253260	217300	263620	264530	220680
MEAN	5286	3794	3803	4210	5341	7613	9002	8170	7243	8504	8533	7356
MAX	6600	4640	5330	5300	7390	9740	10200	9820	8140	9170	9320	9000
MIN	3640	2880	2310	2790	3580	6060	5390	6680	6290	7250	7270	6590
AC-FT	325000	225800	233800	258800	296600	468100	535600	502300	431000	522900	524700	437700

CAL YR 1974 TOTAL 2495060 MEAN 6836 MAX 10500 MIN 1290 AC-FT 4949000
WTR YR 1975 TOTAL 2401070 MEAN 6578 MAX 10200 MIN 2310 AC-FT 4763000

09527000 PILOT KNOB POWERPLANT AND WASTEWAY NEAR PILOT KNOB, CALIF.

LOCATION.--Lat 32°44'15", long 114°42'56", in NW¼SW¼ sec.25, T.16 S., R.21 E., San Bernardino meridian, Imperial County, 2 mi (3 km) east of summit of Pilot Knob, 6 mi (10 km) west of Yuma, Ariz., and 20.8 mi (33.5 km) downstream from intake of All-American Canal at Imperial Dam.

PERIOD OF RECORD.--February 1939 to current year. Prior to October 1943 monthly discharge only, published in WSP 1313. Prior to October 1956, published as Pilot Knob wasteway near Pilot Knob.

GAGE.--Totalizing flowmeter on each turbine. In addition, water-stage recorder in forebay on right bank of All-American Canal (also used as forebay gage for sta 09527500); tailrace gage with remote recorder logged hourly in control house; calibrated wicket gates for turbine flow and calibrated bypass gates for wasteway flow which are logged for each change. Datum of forebay nonrecording gage is 150.00 ft (45.720 m); that of tailrace nonrecording gage is 0.00 ft (0.000 m); elevation of sill of bypass gates is 147.88 ft (45.074 m) above mean sea level.

EXTREMES.--Period of record: Maximum daily discharge, 8,350 ft^3/s (236 m^3/s) Jan. 26, 1958; no flow for long periods.

REMARKS.--Records excellent above 1,200 ft^3/s (34.0 m^3/s) and good below. Daily discharge computed from flowmeter equipment or from head and gate openings on wicket gates. Records show water released through Pilot Knob powerplant and wasteway from All-American Canal and returned to Colorado River through Rockwood gates. Pilot Knob wasteway completed in summer of 1938 and first flow occurred Feb. 5, 1939. Pilot Knob powerplant was completed in January 1957 and first flow occurred Jan. 14, 1957. See table below for monthly return flow by Pilot Knob wasteway only.

COOPERATION.--Midnight readings of flowmeter, recorder graph of forebay, and record of tailrace elevations and gate openings furnished by Imperial Irrigation District.

DISCHARGE, IN CUBIC FEET PER SECOND, WATER YEAR OCTOBER 1974 TO SEPTEMBER 1975
MEAN VALUES

DAY	OCT	NOV	DEC	JAN	FEB	MAR	APR	MAY	JUN	JUL	AUG	SEP
1			0		0	1260	2200	1670	0	1630	2090	1280
2			0		0	1230	2410	1380	0	1650	2090	1300
3			0		0	1030	2530	1390	0	1720	2040	1260
4			0		0	1080	2550	1420	0	1480	1700	1250
5			0		0	1080	2320	1440	0	1750	1780	1250
6			0		0	1080	2230	1360	1040	1780	1950	1140
7			0		0	1080	2250	1290	1080	1810	1950	1110
8			0		0	1080	2370	1260	1130	1830	1960	1080
9			0		0	1150	2990	1260	0	1560	1980	1100
10			0		0	1390	3720	994	0	1640	1980	1050
11			0		0	1610	3560	41	0	1720	1970	996
12			0		0	1690	1880	0	0	1860	1990	1030
13			0		0	1680	1760	0	0	2020	2010	1030
14			0		0	1680	1570	0	0	2090	1900	986
15			0		0	1670	2060	0	0	2090	1870	966
16			623		0	1680	2060	0	1160	2120	1870	950
17			1000		206	1670	1740	0	1180	2100	1820	0
18			1020		998	1650	1980	0	1160	2100	1730	0
19			1010		1000	1660	2120	0	1150	2100	1760	0
20			1000		1050	1700	2160	0	1230	2120	1750	0
21			1000		1060	1960	2060	0	1350	2100	1630	0
22			1000		1250	1840	2140	0	1380	2070	1480	0
23			998		1430	1820	2120	0	1380	2090	1440	0
24			1000		1390	1890	2110	0	1410	2120	1430	0
25			1080		1430	1970	2130	0	1440	2080	1410	0
26			1200		1590	2000	2030	0	1460	2100	1500	0
27			1180		1560	2000	2010	0	1150	2090	1550	0
28			1180		1550	2000	1970	0	1120	2070	1540	0
29			1250		---	1990	1980	0	1340	2040	1560	0
30			1190		---	1960	1910	0	1510	2040	1580	0
31		---	1060		---	1840	---	0	---	2140	1560	---
TOTAL	0	0	16791	0	14514	49420	66920	13505	22670	60110	54870	17778
MEAN	0	0	542	0	518	1594	2231	436	756	1939	1770	593
MAX	0	0	1250	0	1590	2000	3720	1670	1510	2140	2090	1300
MIN	0	0	0	0	0	1030	1570	0	0	1480	1410	0
AC-FT	0	0	33300	0	28790	98020	132700	26790	44970	119200	108800	35260
(a)	0	0	371	0	0	0	0	0	0	0	0	0

CAL YR 1974	TOTAL	336369	MEAN 922	MAX 2640	MIN 0	AC-FT	667200	a 371
WTR YR 1975	TOTAL	316578	MEAN 867	MAX 3720	MIN 0	AC-FT	627900	a 371

a Return flow, in acre-feet, by Pilot Knob wasteway (included in daily discharge table).

09527500 ALL-AMERICAN CANAL BELOW PILOT KNOB WASTEWAY, CALIF.

LOCATION.--Lat 32°44'07", long 114°43'23", in NW¼SE¼ sec.26, T.16 S., R.21 E., San Bernardino meridian, Imperial County, on left bank 0.4 mi (0.6 km) downstream from Pilot Knob wasteway, 6 mi (10 km) west of Yuma, Ariz., 15 mi (24 km) upstream from turnout to Coachella Canal, and 21.2 mi (34.1 km) downstream from intake at Imperial Dam.

PERIOD OF RECORD.--October 1961 to current year.

GAGE.--Water-stage recorder. Datum of gage is 150.00 ft (45.720 m) above mean sea level. Auxiliary water-stage recorder on right bank 0.4 mi (0.6 km) upstream used to determine head on Pilot Knob check gates (also used as forebay gage for sta 09527000, Pilot Knob powerplant and wasteway). Datum of auxiliary gage is 150.00 ft (45.720 m) above mean sea level.

AVERAGE DISCHARGE.--14 years, 4,723 ft^3/s (133.8 m^3/s), 3,422,000 acre-ft/yr (4,220 hm^3/yr).

EXTREMES.--Period of record: Maximum daily discharge, 7,380 ft^3/s (209 m^3/s) May 14, 1975; no flow Jan. 4, 1967.

REMARKS.--Records excellent. Water is used for power development at three sites below station and for irrigation in Coachella and Imperial Valleys.

COOPERATION.--Gage-height record and log of gate operation furnished by Imperial Irrigation District.

DISCHARGE, IN CUBIC FEET PER SECOND, WATER YEAR OCTOBER 1974 TO SEPTEMBER 1975

DAY	OCT	NOV	DEC	JAN	FEB	MAR	APR	MAY	JUN	JUL	AUG	SEP
1	5280	3140	2550	3610	4040	4900	6220	7080	5900	5400	5620	6170
2	5310	3200	3020	4160	3210	4610	6440	7150	6020	5480	5740	6070
3	5530	3200	3290	4000	3640	5100	6400	7290	6040	5480	5370	6240
4	5710	3270	3200	3760	3420	5130	6360	7070	6190	4990	5500	6430
5	5530	3380	2400	3140	3390	5050	6350	6850	6050	5110	5660	6620
6	5490	3470	2390	2330	3060	5080	6500	6810	5990	5190	5800	6610
7	5480	3580	1850	2520	3180	5050	6510	6870	5860	5200	5720	5740
8	5310	3650	1900	2530	3300	5060	6820	6740	5560	5670	5920	5320
9	5360	3680	1860	2620	3590	4880	5270	6650	5170	5790	6010	5020
10	5320	3550	2140	2850	3840	4910	3210	6830	5250	5880	6030	5090
11	5030	3350	2350	3540	3650	4490	3450	6880	5450	5600	6020	4790
12	4960	3340	2560	3410	3890	4250	3360	6910	5500	5700	6210	5090
13	4710	3840	2860	3560	4050	4430	3110	7080	5460	5830	6100	5080
14	4450	3900	2980	3590	4010	3790	3970	7380	5300	5780	6140	5060
15	4420	3730	3120	3700	4150	3950	4310	7290	5320	5760	6080	5320
16	4530	3590	2880	3960	4240	4130	4990	7260	5240	5780	6250	5510
17	4790	3400	2520	3900	4180	4470	5680	7270	5180	5840	6260	5730
18	4780	3250	2610	3830	4400	4660	6130	6800	5270	5710	6130	5660
19	4770	3260	2970	3520	4270	5100	6450	6360	5320	5690	6230	5700
20	4370	3500	2920	3460	4400	5600	6880	6340	5370	5620	6330	5540
21	4300	3380	2800	3530	4490	5760	6970	6510	5340	5610	5850	5460
22	4310	3310	3120	3500	4940	6100	7000	6490	5110	5710	5850	5570
23	4330	2950	2940	3650	4850	6190	7040	6100	4840	5840	5720	5720
24	4150	2820	2800	3620	4530	6460	6920	6170	5100	5910	5450	6030
25	3760	2680	2140	3840	4830	6450	6750	5760	5270	5620	5200	5990
26	3220	2920	2580	3800	4850	6510	6850	5740	5290	5680	5380	5990
27	3120	3010	3260	4000	4990	6760	6990	5790	5430	5760	5700	6060
28	3230	2710	3480	4110	4720	6830	6980	5990	5470	6000	5890	5840
29	3220	2500	3470	4450	---	6400	7110	6070	5330	5990	5790	5860
30	3530	2570	3380	4560	---	5910	7080	6100	5400	5760	5700	5860
31	3590	---	3730	4240	---	6420	---	6000	---	5760	5940	---
TOTAL	141890	98130	86070	111290	114110	164430	178100	205630	164020	175140	181590	171170
MEAN	4577	3271	2776	3590	4075	5304	5937	6633	5467	5650	5858	5706
MAX	5710	3900	3730	4560	4990	6830	7110	7380	6190	6000	6330	6620
MIN	3120	2500	1850	2330	3060	3790	3110	5740	4840	4990	5200	4790
AC-FT	281400	194600	170700	220700	226300	326100	353300	407900	325300	347400	360200	339500

CAL YR 1974 TOTAL 1865000 MEAN 5110 MAX 7290 MIN 810 AC-FT 3699000
WTR YR 1975 TOTAL 1791570 MEAN 4908 MAX 7380 MIN 1850 AC-FT 3554000

DIVERSIONS AND RETURN FLOWS AT AND BELOW IMPERIAL DAM

Return surface flows below Imperial Dam, Ariz.-Calif.

Between Imperial Dam and the international boundary return surface flows from irrigated areas enter the Colorado River through many drains and wasteways in Arizona and California. Other return flows enter the Gila River below the gaging station near Dome (09520500). In addition, return flows collected by the Main Drain and East Main Canal are delivered across the international boundary for use in Mexico.

Diversions for irrigation in the Gila Project in Arizona are made at Imperial Dam by the Gila Gravity Main Canal. (See sta 09522500.) Diversions for the Yuma Project in Arizona and California are made at Imperial Dam by the All-American Canal (see sta 09523000)

See figure 4 for a schematic diagram showing location of diversions and return flows.

09527000. PILOT KNOB POWERPLANT AND WASTEWAY.--See daily table elsewhere in this report.

09527900. MITTRY LAKE OUTLET CHANNEL
LOCATION.--Water-stage recorder and sharp-crested weir, in NW¼SE¼ sec.14, T.7 S., R.22 W., 1,000 ft (300 m) upstream from outlet to Colorado River and Laguna Dam.

PERIOD OF RECORD.--Monthly discharge October 1974 to September 1975.

REMARKS.--Record shows return flow to Colorado River from Mittry Lake. Record prior to Nov. 6, 1974, records furnished by Bureau of Reclamation.

09528600. LAGUNA CANAL WASTEWAY.
LOCATION.--Water-stage recorder and sharp-crested weir, in SE¼SW¼ sec.14, T.7 S., R.22 W., 1,000 ft (300 m) downstream from Laguna Dam and 0.7 mi (1.1 km) upstream from outlet to Colorado River.

PERIOD OF RECORD.--Monthly discharge October 1960 to current year.

REMARKS.--Record shows waste water from North Gila Valley Irrigation District returned to Colorado River. Flow record computed from standard weir rating.

09528800. LEVEE CANAL WASTEWAY.
LOCATION.--Water-stage recorder and sharp-crested weir, in SE¼SW¼ sec.4, T.8 S., R.22 W., 1,000 ft (300 m) upstream from outlet to Colorado River.

PERIOD OF RECORD.--Monthly discharge October 1960 to current year.

REMARKS.--Record shows waste water from North Gila Valley Irrigation District returned to Colorado River.

09529000. NORTH GILA DRAIN NO. 1.
LOCATION.--Water-stage recorder, in SE¼SW¼ sec.4, T.8 S., R.22 W., 0.25 mi (0.40 km) upstream from outlet to Colorado River and 5.5 mi (8.8 km) downstream from Laguna Dam.

PERIOD OF RECORD.--Monthly discharge October 1960 to current year.

REMARKS.--Record shows waste water from North Gila Valley Irrigation District returned to Colorado River. There is no gage, but, due to fairly constant drainage, flow record is computed by interpolation between discharge measurements made monthly.

09529050. NORTH GILA DRAIN NO. 3.
LOCATION.--Drain enters wasteway to Gila River in NE¼NE¼ sec.18, T.8 S., R.21 W., 1,000 ft (300 m) upstream from Gila River.

PERIOD OF RECORD.--Monthly discharge April 1962 to current year.

REMARKS.--Record shows seepage from Gila Gravity Main Canal. There is no gage; records are computed by interpolation between discharge measurements made monthly.

09529100. FORTUNA WASTEWAY.
LOCATION.--Water-stage recorder and sharp-crested weir, in NE¼ sec.30, T.8 S., R.21 W., 1.3 mi (2.1 km) upstream from Gila River.

PERIOD OF RECORD.--Monthly discharge October 1960 to September 1963, October 1964 to current year.

REMARKS.--Record shows waste water spilled from Gila Gravity Main Canal; flow rarely reaches Gila River.

09529150. NORTH GILA MAIN CANAL WASTEWAY.
LOCATION.--Water-stage recorder in NE¼NW¼ sec.22, T.8 S., R.22 W., 1,000 ft (300 m) upstream from outlet to Gila River. Prior to July 1966 water-stage recorder and sharp-crested weir, 1 mi (1.6 km) upstream from outlet to Gila River.

PERIOD OF RECORD.--Monthly discharge October 1960 to current year.

REMARKS.--Record shows waste water from North Gila Valley Irrigation District. Prior to July 1966 record shows waste water less flow diverted for irrigation between gage and Gila River.

09529160. SOUTH GILA PUMP OUTLET CHANNEL NO. 3.
LOCATION.--Water-stage recorder in NW¼SE¼ sec.22, T.8 S., R.22 W., 0.5 mi (0.8 km) upstream from outlet to Gila River. Prior to Aug. 1, 1965, record obtained by Badger total-flow meter about 500 ft (150 m) downstream.

PERIOD OF RECORD.--Monthly discharge January 1965 to current year.

REMARKS.--Record shows water pumped from wells in South Gila Valley Unit.

09529200. BRUCE CHURCH DRAIN.
LOCATION.--At culvert in NW¼NE¼ sec.21, T.8 S., R.22 W., 0.2 mi (0.3 km) upstream from outlet to Gila River.

PERIOD OF RECORD.--Monthly discharge April 1962 to current year.

REMARKS.--Record shows seepage water from parts of secs.15, 16, and 21 (Bruce Church Ranch). Flow computed by interpolation between discharge measurements; prior to Nov. 30, 1970, flow determined from pump rating.

09529240. SOUTH GILA PUMP OUTLET CHANNEL NO. 2.
LOCATION.--Water-stage recorder in NW¼SW¼ sec.28, T.8 S., R.22 W., 0.6 mi (1.0 km) upstream from outlet to Gila River; prior to Oct. 18, 1965, outlet was to Wellton-Mohawk Main Outlet Drain. Prior to Aug. 1, 1965, Sparling meter at outlet to Wellton-Mohawk Main Outlet Drain.

PERIOD OF RECORD.--Monthly discharge January 1962 to current year.

REMARKS.--Record shows water pumped from wells in South Gila Valley Unit and conveyed by concrete channel to the Gila River.

09529250. BRUCE CHURCH WASTEWAY.
LOCATION.--Water-stage recorder and sharp-crested weir, in SE¼SE¼ sec.20, T.8 S., R.22 W., 500 ft (150 m) upstream from outlet to Gila River.

PERIOD OF RECORD.--Monthly discharge October 1960 to current year.

REMARKS.--Record shows waste water from North Gila Valley Irrigation District returned to Gila River.

09529300. WELLTON-MOHAWK MAIN OUTLET DRAIN (CONVEYANCE CHANNEL).
LOCATION.--Water-stage recorder and Parshall flume in NE¼NW¼ sec.17, T.8 S., R.21 W., 7.8 mi (12.6 km) upstream from outlet to Gila River (M.O.D.E. 1), which is 0.6 mi (1.0 km) upstream from mouth of Gila River. Prior to Feb. 20, 1962, gage heights measured from reference point on measuring bridge. Prior to Oct. 1, 1974, gage located 1,000 ft (300 m) upstream without Parshall flume.

PERIOD OF RECORD.--Monthly discharge October 1960 to current year.

REMARKS.--Record shows water pumped from numerous wells in Wellton-Mohawk Irrigation and Drainage District to lower the water table. Flow can be discharged to the Gila River or Colorado River by any one of or combination of three outlets. These outlets are known as: M.O.D.E. 1 (release to Gila River about 8.0 mi (13 km) below station); M.O.D.E. 2 (see sta 09531800), release to Colorado River above Morelos Dam; and M.O.D.E. 3 (see sta 09531900), release to Colorado River below Morelos Dam. No water was released through M.O.D.E. 1 during the year.

09529360. SOUTH GILA PUMP OUTLET CHANNEL NO. 1.
LOCATION.--Water-stage recorder in SW¼NE¼ sec.30, T.8 S., R.22 W., 0.2 mi (0.3 km) upstream from outlet to Gila River, which is 0.6 mi (1.0 km) upstream from mouth of Gila River. Prior to Aug. 1, 1965, Sparling flowmeter 300 feet (90 m) upstream.

PERIOD OF RECORD.--Monthly discharge August 1961 to current year.

REMARKS.--Record shows water pumped from wells in South Gila Valley Unit and conveyed by concrete channel to Gila River.

09529400. SOUTH GILA DRAIN NO. 2.
LOCATION.--Near center of sec.24, T.8 S., R.23 W., at outlet to Colorado River. Prior to Oct. 1, 1969, Sparling flowmeter at same site.

PERIOD OF RECORD.--Monthly discharge October 1960 to current year.

REMARKS.--Record shows ground-water drainage and occasional waste water from South Gila Valley Unit returned to Colorado River. There is no gage; flow record computed by interpolation between discharge measurements made monthly.

09529420. SOUTH GILA TERMINAL WASTEWAY.
LOCATION.--Water-stage recorder and Parshall flume in SW¼NW¼ sec.36, T.8 S., R.23 W., 2.0 mi (3.2 km) upstream from outlet to Colorado River. Prior to Aug. 1, 1965, total-flow meter at same site.

PERIOD OF RECORD.--Monthly discharge March 1965 to current year.

REMARKS.--Record shows waste water from South Gila Canal of South Gila Valley Unit returned to Colorado River.

09529440. SOUTH GILA PUMP OUTLET CHANNEL NO. 4.
LOCATION.--Water-stage recorder and broad-crested weir, in NW¼NW¼ sec.26, T.8 S., R.23 W., 1.5 mi (2.4 km) upstream from outlet to Colorado River.

PERIOD OF RECORD.--Monthly discharge July 1965 to current year.

REMARKS.--Record shows water pumped from wells in South Gila Valley Unit and conveyed by concrete-lined channel to Colorado River.

09529600. RESERVATION DRAIN NO. 7.
LOCATION.--At downstream end of culvert on State Road 24 (formerly Avenue C), in NE¼NE¼ sec.33, T.15 S., R.23 E., San Bernardino meridian, 0.5 mi (0.8 km) upstream from outlet to Reservation Main Drain. Prior to Oct. 1, 1969, nonrecording gage at same site.

PERIOD OF RECORD.--Monthly discharge March 1966 to current year.

REMARKS.--Record shows drainage water from sec.34, T.15 S., R.23 E., and is used with sta 09529700 to determine seepage from All-American Canal. There is no gage; flow record computed by interpolation between discharge measurements made monthly. Beginning June 20, 1967, Imperial Irrigation District makes discharge measurements weekly.

09529700. RESERVATION MAIN DRAIN NO. 6.
LOCATION.--Nonrecording gage on upstream right piling of Stallnacker Road Bridge (formerly 9th Street Bridge), in SE¼SW¼ sec.32, T.15 S., R.23 E., San Bernardino meridian.

PERIOD OF RECORD.--Monthly discharge March 1966 to current year.

REMARKS.--Record shows waste and drainage water from the Reservation Division, and is used with sta 09529600 to determine seepage from All-American Canal, which parallels drain for 4 mi (6.4 km). Flow record computed by interpolation between discharge measurements made monthly. The Imperial Irrigation District makes discharge measurements weekly.

09529800. RESERVATION DRAIN NO. 2.
LOCATION.--At upstream side of bridge on White Road (formerly 8th Street), in SW¼NW¼ sec.6, T.16 S., R.23 E., San Bernardino meridian, 0.9 mi (1.4 km) upstream from outlet to Reservation Main Drain.

PERIOD OF RECORD.--Monthly discharge March 1966 to current year.

REMARKS.--Record used to compute seepage from All-American Canal in sec.31, T.15 S., R.22 E. There is no gage; flow record computed by interpolation between discharge measurements made monthly. The Imperial Irrigation District makes discharge measurements weekly.

09529900. RESERVATION DRAIN NO. 3.
LOCATION.--Nonrecording gage on pier on right side of Jackson Road Bridge (formerly 5th Street Bridge), in SE¼SE¼ sec.10, T.16 S., R.22 E., San Bernardino meridian, 1.0 mi (1.6 km) upstream from outlet to Reservation Main Drain.

PERIOD OF RECORD.--Monthly discharge March 1966 to current year.

REMARKS.--Record used to compute seepage from All-American Canal upstream from Yuma Main Canal. Flow record computed by interpolation between discharge measurements made monthly. Imperial Irrigation District makes discharge measurements weekly.

09530000. RESERVATION MAIN DRAIN NO. 4.
LOCATION.--Water-stage recorder and vane meter in NW¼SE¼ sec.26, T.16 S., R.22 E., San Bernardino meridian, 1,000 ft (300 m) upstream from railroad culvert. Prior to May 29, 1974, water-stage recorder only. Prior to Dec. 16, 1971, at culvert 1,000 ft (300 m) downstream. Flow enters Yuma Main Canal wasteway channel 200 ft (60 m) downstream from spillway structure. Prior to May 1955, it entered 500 ft (150 m) upstream from outlet of Yuma Main Canal wasteway in SE¼SW¼ sec.26, T.16 S., R.22 E., San Bernardino meridian.

PERIOD OF RECORD.--Monthly discharge January 1913 to April 1920, October 1921 to March 1925, January 1934 to current year (calendar year discharge only 1934-36). Prior to October 1955, published as California drainage canal. Prior to January 1937, no gage; 1937 to Apr. 16, 1941, nonrecording gages at same site at different datums.

REMARKS.--Record shows waste and drainage water from area east of Yuma Main Canal on Reservation Division. Since 1939, seepage from All-American Canal has caused large increase. Flow is not included in the record of Yuma Main Canal wasteway.

09530200. YUMA MESA OUTLET DRAIN.
LOCATION.--Venturi meter with recorder in SE¼SW¼ sec.28, T.16 S., R.22 E., San Bernardino meridian, in Arizona, Yuma County, 0.3 mi (0.5 km) from outlet to Colorado River.

PERIOD OF RECORD.--Monthly discharge July 1970 to current year.

REMARKS.--Record shows water pumped from wells on the Yuma Mesa and conveyed by underground conduit to Colorado River.

COOPERATION.--Records furnished by Bureau of Reclamation prior to July 21, 1972.

09530400. RESERVATION DRAIN NO. 11.
LOCATION.--At outlet to Drain 8-B (Araz drain), in NE¼NE¼ sec.19, T.16 S., R.22 E., San Bernardino meridian.

PERIOD OF RECORD.--Monthly discharge March 1966 to current year.

REMARKS.--Record shows drainage from sec.20, T.16 S., R.22 E. Flow at this station, with that at sta 09530500, is used to determine seepage from All-American Canal. There is no gage; flow record computed by interpolation between discharge measurements made monthly. Beginning June 20, 1967, Imperial Irrigation District makes discharge measurements weekly.

09530500. DRAIN 8-B.
LOCATION.--Enters Colorado River in NE¼NW¼ sec.30, T.16 S., R.22 E., San Bernardino meridian, 4 mi (6.4 km) downstream from outlet of Yuma Main Canal wasteway.

PERIOD OF RECORD.--Monthly discharge March 1948 to current year. Prior to October 1955, published as Araz drain.

REMARKS.--Record shows seepage from All-American Canal, and waste and drainage water west of Yuma Main Canal on the Reservation Division. Flow at this station, with that at sta 09530400, is used to determine seepage from All-American Canal. There is no gage, but due to fairly constant drainage, flow record is computed by interpolation between discharge measurements made monthly. Imperial Irrigation District makes discharge measurements weekly at site 1,000 ft (300 m) upstream.

09531800. MAIN OUTLET DRAIN EXTENSION ABOVE MORELOS DAM (M.O.D.E. 2).
LOCATION.--Water-stage recorder and Parshall flume in NW¼NW¼ sec.36, T.16 S., R.21 E., San Bernardino meridian, at outlet to Colorado River, 1.7 mi (2.7 km) upstream from Morelos Dam.

PERIOD OF RECORD.--Monthly discharge November 1965 to current year.

REMARKS.--Record shows water conveyed to Colorado River 1.7 mi (2.7 km) above Morelos Dam, from numerous drainage wells in Wellton-Mohawk Irrigation and Drainage District. (See also stas 09529300 and 09531900.)

DIVERSIONS AND RETURN FLOWS AT AND BELOW IMPERIAL DAM

Return surface flows below Imperial Dam, Ariz.-Calif.--Continued

09531850. COOPER WASTEWAY.
LOCATION.--Water-stage recorder and weir, in NE¼NE¼ sec.28, T.8 S., R.24 W., 0.6 mi (1.0 km) upstream from Morelos Dam. Prior to July 14, 1971, at site 1 mi (1.6 km) downstream.

PERIOD OF RECORD.--Monthly discharge January 1934 to current year.

REMARKS.--Record shows waste water from Valley Division returned to Colorado River.

COOPERATION.--Record furnished by International Boundary and Water Commission (U.S. Section).

09531900. MAIN OUTLET DRAIN EXTENSION BELOW MORELOS DAM (M.O.D.E 3).
LOCATION.--Water-stage recorder and Parshall flume in NW¼SE¼ sec.28, T.8 S., R.24 W., at outlet to Colorado River just downstream from Morelos Dam.

PERIOD OF RECORD.--Monthly discharge November 1965 to current year.

REMARKS.--Record shows water conveyed to Colorado River below Morelos Dam, from numerous drainage wells in Wellton-Mohawk Irrigation and Drainage District. (See also stas 09529300, 09531800.)

COOPERATION.--Record furnished by International Boundary and Water Commission (U.S. Section).

09532500. ELEVEN MILE WASTEWAY.
LOCATION.--Water-stage recorder and regulating gate in SE¼NW¼ sec.8, T.9 S., R.24 W., 3.2 mi (5.1 km) downstream from Morelos Dam.

PERIOD OF RECORD.--Monthly discharge January 1924 to current year.

REMARKS.--Record shows waste water from Valley Division returned to Colorado River.

COOPERATION.--Record furnished by International Boundary and Water Commission (U.S. Section).

09533000. TWENTY-ONE MILE WASTEWAY.
LOCATION.--Water-stage recorder and weir in NE¼NW¼ sec.35, T.10 S., R.25 W., 0.6 mi (1.0 km) upstream from outlet to Colorado River, which is 2.4 mi (3.9 km) upstream from southerly international boundary and 2.6 mi (4.2 km) northwest of San Luis, Ariz. Prior to May 1, 1971, water-stage recorder and Parshall flume at site 200 ft (60 m) upstream.

PERIOD OF RECORD.--Monthly discharge March 1939 to current year.

REMARKS.--Record shows waste water from Valley Division returned to Colorado River.

COOPERATION.--Record furnished by International Boundary and Water Commission (U.S. Section).

09534000. MAIN DRAIN.
LOCATION.--Flowmeters in discharge pipes at pumping plant in SE¼NE¼ sec.11, T.11 S., R.25 W., 0.4 mi (0.6 km) west of San Luis, Ariz. Prior to Apr. 1, 1969, rated pumps with forebay and afterbay gages to measure head.

PERIOD OF RECORD.--Monthly discharge January 1919 to current year.

REMARKS.--Record shows flow which consists mostly of drainage water from the Valley Division which is pumped across the Arizona-Sonora boundary for use in Mexico. Flowmeters checked by discharge measurements made by International Boundary and Water Commission (U.S. Section).

COOPERATION.--Record furnished by International Boundary and Water Commission (U.S. Section).

09534300. WEST MAIN CANAL WASTEWAY.
LOCATION.--Water-stage recorder and weir, in NW¼NE¼ sec.11, T.11 S., R.25 W., 0.3 mi (0.5 km) upstream from outlet to Main drain, and 0.4 mi (0.6 km) west of San Luis, Ariz. Prior to Aug. 1, 1975, at site 150 ft (46 m) upstream from outlet to Main drain.

PERIOD OF RECORD.--Monthly discharge February 1971 to current year.

REMARKS.--Record shows waste water from Valley Division which is discharged across the Arizona-Sonora boundary for use in Mexico.

COOPERATION.--Record furnished by International Boundary and Water Commission (U.S. Section).

09534500. EAST MAIN CANAL WASTEWAY.
LOCATION.--Water-stage recorder and weir, in NW¼SW¼ sec.12, T.11 S., R.25 W., 0.3 mi (0.5 km) upstream from outlet to Main drain, and 0.2 mi (0.3 km) west of San Luis, Ariz.

PERIOD OF RECORD.--Monthly discharge January 1924 to June 1928, January 1932 to December 1933, April 1935 to current year. Calendar year estimates 1934 and 1935, published in WSP 1313.

REMARKS.--Record shows amount of unused water at the extreme end of the Valley Division which is discharged across the Arizona-Sonora boundary for use in Mexico.

COOPERATION.--Record furnished by International Boundary and Water Commission (U.S. Section).

Return surface flows below Imperial Dam, Ariz.-Calif.--Continued

MONTHLY RETURN FLOWS, IN ACRE-FEET, WATER YEAR OCTOBER 1974 TO SEPTEMBER 1975

Month	Mittry Lake Outlet Channel 09527900	Laguna Canal wasteway 09528600	Levee Canal wasteway 09528800	North Gila Drain No. 1 09529000	North Gila Drain No. 3 09529050	Fortuna wasteway 09529100
October	736	0	116	462	0	41
November	509	8.5	173	378	0	40
December	645	5.1	102	303	0	37
CAL YR 1974	-	14	1,710	4,480	24	515
January	586	3.4	104	323	5.8	47
February	571	1.2	136	429	5.6	37
March	587	0	91	324	1.4	40
April	682	0	175	241	0	40
May	819	.2	146	380	0	36
June	606	0	89	383	0	30
July	711	0	143	433	0	24
August	1,440	0	172	498	0	21
September	1,540	1.8	110	437	0	22
WTR YR 1975	9,440	20	1,550	4,590	13	416

Month	North Gila Main Canal wasteway 09529150	South Gila Pump Outlet Channel No. 3 09529160	Bruce Church Drain 09529200	South Gila Pump Outlet Channel No. 2 09529240	Bruce Church wasteway 09529250
October	34	4.4	104	952	67
November	44	7.6	99	1,410	22
December	9.6	150	76	1,940	7.6
CAL YR 1974	348	4,000	995	12,640	390
January	4.6	1.8	46	636	13
February	43	3.1	44	715	10
March	24	1,580	52	2,210	4.1
April	57	1,680	53	1,950	12
May	71	199	65	1,910	6.0
June	66	11	82	2,040	17
July	105	1,490	97	2,160	.8
August	99	1,980	91	2,200	2.8
September	42	183	89	1,540	0
WTR YR 1975	598	7,300	898	19,650	161

Month	Wellton-Mohawk Main Outlet Drain 09529300	South Gila Pump Outlet Channel No. 1 09529360	South Gila Drain No. 2 09529400	South Gila Terminal wasteway 09529420	South Gila Pump Outlet Channel No. 4 09529440
October	18,400	1,590	23	66	0
November	17,410	1,450	48	44	1.0
December	18,320	2,710	37	20	0
CAL YR 1974	206,400	29,370	210	481	4,400
January	18,150	1,370	28	3.3	0
February	16,420	1,950	28	12	0
March	16,770	2,720	28	17	0
April	13,370	2,390	12	38	482
May	17,530	2,700	0	34	0
June	17,870	2,660	0	37	.3
July	18,770	2,670	14	43	343
August	18,110	2,650	32	19	234
September	17,770	2,540	14	42	17
WTR YR 1975	208,900	27,380	264	375	1,080

NOTE.--Yearly totals given above have been computed from total cfs-days and may differ slightly from the summation of monthly total acre-feet on occasion.

DIVERSIONS AND RETURN FLOWS AT AND BELOW IMPERIAL DAM

Return surface flows below Imperial Dam, Ariz.-Calif.--Continued

MONTHLY RETURN FLOWS, IN ACRE-FEET, WATER YEAR OCTOBER 1974 TO SEPTEMBER 1975

Month	Reservation Drain No. 7 09529600	Reservation Main Drain No. 6 09529700	Reservation Drain No. 2 09529800	Reservation Drain No. 3 09529900	Reservation Main Drain No. 4 09530000	Yuma Mesa Outlet Drain 09530200
October	84	1,110	35	260	3,830	5,360
November	60	1,010	45	250	3,630	5,140
December	57	928	17	230	3,680	5,260
CAL YR 1974	940	11,860	204	3,100	39,750	58,070
January	56	847	12	172	3,040	5,110
February	66	795	6.0	144	2,700	4,670
March	118	952	11	172	3,300	5,090
April	116	1,050	12	221	3,680	4,060
May	125	1,110	16	262	3,800	4,930
June	96	1,010	10	249	3,210	4,830
July	111	984	6.9	259	3,130	4,900
August	108	1,060	12	290	3,500	4,750
September	95	1,070	10	269	3,480	4,500
WTR YR 1975	1,090	11,930	193	2,780	40,980	58,590

Month	Reservation Drain No. 11 09530400	Drain 8-B 09530500	M.O.D.E. 2 (above Morelos Dam) 09531800	Cooper wasteway 09531850	M.O.D.E. 3 (below Morelos Dam) 09531900
October	37	195	0	39	19,000
November	36	202	0	40	17,900
December	31	171	0	64	18,500
CAL YR 1974	203	1,610	0	681	210,700
January	22	128	0	48	18,630
February	17	106	0	96	16,990
March	18	128	0	81	17,510
April	18	131	0	39	13,120
May	25	144	0	47	17,580
June	24	126	0	66	17,950
July	25	166	0	72	18,950
August	34	204	0	51	18,870
September	42	225	0	35	18,470
WTR YR 1975	329	1,930	0	678	213,500

Month	Eleven Mile wasteway 09532500	Twenty-one Mile wasteway 09533000	Main Drain 09534000	West Main Canal wasteway 09534300	East Main Canal wasteway 09534500
October	60	0	8,850	270	552
November	160	0	7,890	390	460
December	197	0	7,330	375	607
CAL YR 1974	942	4.8	96,520	4,840	5,590
January	21	0.4	7,140	422	650
February	145	0	6,480	429	454
March	159	0	7,500	939	481
April	73	1.0	7,430	664	455
May	21	5.2	8,520	422	872
June	153	0.8	8,020	407	458
July	14	1.6	8,130	382	656
August	181	0	8,090	392	820
September	20	0	8,430	429	848
WTR YR 1975	1,200	9.0	93,810	5,520	7,310

NOTE.--Yearly totals given above have been computed from total cfs-days and may differ slightly from the summation of monthly total acre-feet on occasion.

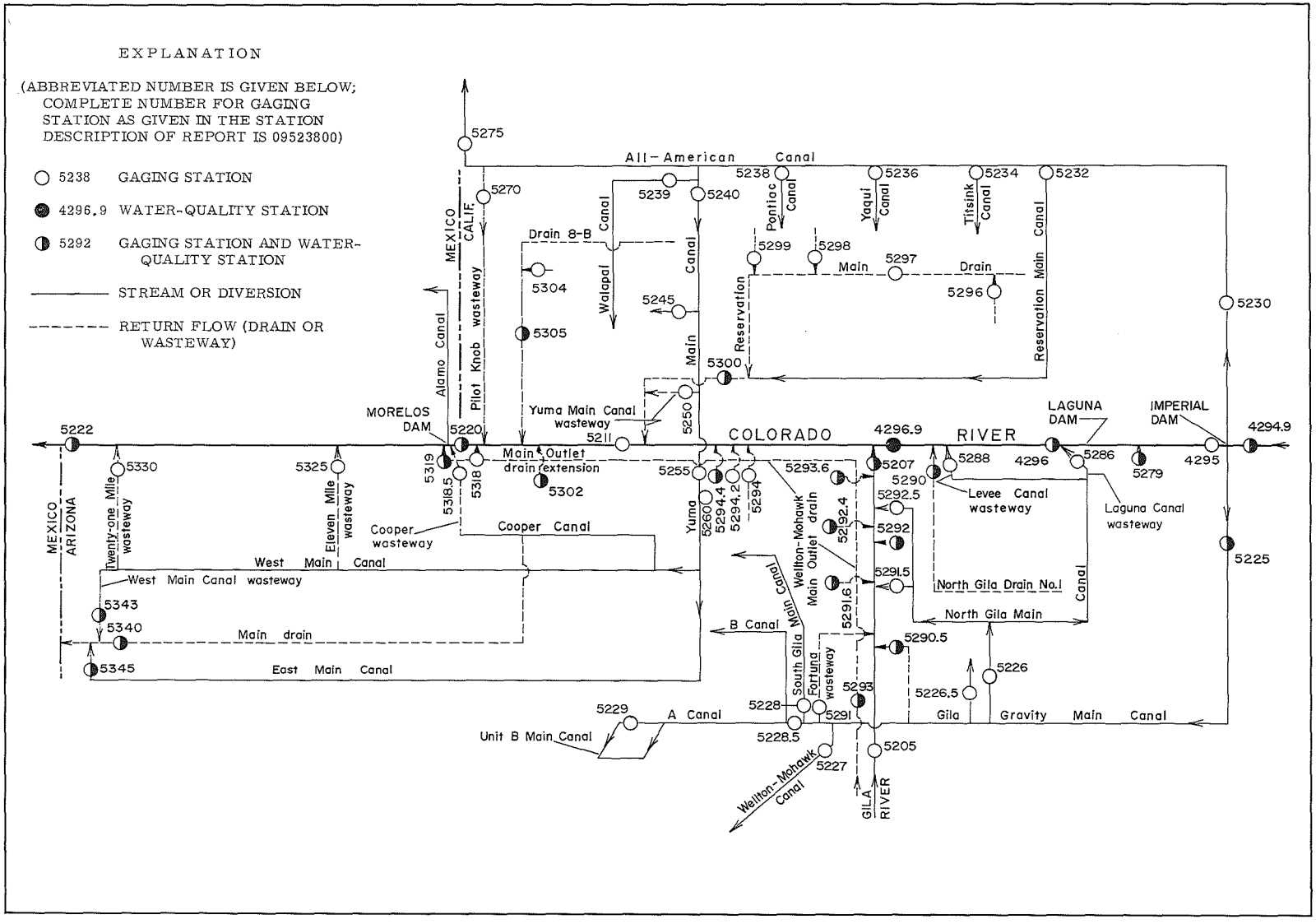

FIGURE 4.--SCHEMATIC DIAGRAM SHOWING GAGING STATIONS AND WATER-QUALITY STATIONS ON STREAMS, DIVERSIONS, AND RETURN FLOWS BETWEEN IMPERIAL DAM AND THE SOUTHERLY INTERNATIONAL BOUNDARY.

10250600 WILDROSE CREEK NEAR WILDROSE STATION, CALIF.
(Hydrologic bench-mark station)

LOCATION.--Lat 36°15"54", long 117°10'40" (unsurveyed), Inyo County, Death Valley National Monument, on left bank 0.4 mi (0.6 km) east of Wildrose Range Headquarters, 2 mi (3 km) east of Wildrose Spring, and 2.5 mi (4.0 km) east of Wildrose Station.
DRAINAGE AREA.--23.7 mi^2 (61.4 km^2).
PERIOD OF RECORD.--October 1960 to September 1975 (discontinued). Weather records June 1964 to September 1975 (discontinued).
INSTRUMENTATION.--Water-stage recorder with rain-gage attachment at altitude of 4,300 ft (1,310 m), from topographic map. Recording and storage-type precipitation gages, recording anemometer, and maximum-minimum thermometer at altitude of 9,990 ft (3,040 m); similar instruments and 24-inch (6.1-cm) screened evaporation pan at altitude of 5,750 ft (1,750 m); recording rain gages at altitudes of 7,200 ft (2,190 m), 6,400 ft (1,950 m), 5,300 ft (1,620 m), and 5,200 ft (1,580 m); flowmeter recording ground-water withdrawals at altitude of 4,300 ft (1,310 m).
AVERAGE DISCHARGE.--15 years, 0.019 ft^3/s (0.0005 m^3/s), 14 acre-ft/yr (17,300 m^3/yr).
EXTREMES.--Current year: Maximum discharge, 119 ft^3/s (3.37 m^3/s) Sept. 7 (gage height, 1.73 ft or 0.527 m); no flow most months.
Period of record: Maximum discharge, 1,060 ft^3/s (30.0 m^3/s) Sept. 4, 1967 (gage height, 6.24 ft or 1.902 m), on basis of slope-area measurement of maximum flow; no flow all or most of each year.
REMARKS.--Records poor. No regulation or diversion above station except spring diversion to range headquarters.

Period	Pan evaporation (inches)	Temperature (°C) at altitude: 9,990 ft Maximum	9,990 ft Minimum	5,750 ft Maximum	5,750 ft Minimum	Ground water (acre-feet) 4,300 ft
Aug. 8 to Oct. 9	17.15	16.7	-0.6	26.7	5.6	26.30
Oct. 9 to Dec. 18	9.73	--	--	20.0	-.6	26.18
Dec. 18 to Feb. 27	--	--	--	27.8	-13.3	26.19
Feb. 27 to Apr. 16	--	--	--	18.3	-1.1	26.19
Apr. 16 to June 19	18.76	--	--	31.1	10.0	26.20
June 19 to Aug. 13	24.17	--	--	31.7	23.9	26.20

Precipitation (inches) at location and altitude:

Month	117°05'05" 36°13'05" 9,990 ft	117°04'15" 36°15'30" 7,200 ft	117°06'50" 36°13'55" 6,400 ft	117°06'40" 36°15'10" 5,750 ft	117°08'10" 36°16'15" 5,300 ft	117°09'50" 36°14'45" 5,200 ft	117°10'40" 36°15'55" 4,300 ft
October 1974	1.34	2.21	1.99	2.17	1.24	0.61	2.1
November	.36	.64	.29	.33	.16	.25	.1
December	0	.74	1.23	.70	.74	1.43	1.4
CAL YR 1974	4.32	9.08	7.33	5.35	4.53	6.39	6.0
January 1975	0	.13	0	0	0	.01	0
February	0	.13	.18	--	.04	.46	.2
March	.28	1.07	1.33	--	1.02	1.51	1.4
April	.44	1.40	0	--	.55	.80	.8
May	.05	0	0	--	0	0	0
June	0	0	0	--	0	0	0
July	0	0	0	--	0	0	0
August	0	0	0	--	0	0	0
September	.20	1.00	.48	--	.40	.41	.4
WTR YR 1975	2.67	7.32	5.50	--	4.15	5.48	6.4

Average Wind Velocity (mph) at location and altitude:

Month	117°05'05", 36°13'05" 9,990 ft	117°06'40", 36°15'10" 5,750 ft
October 1974	7.74	3.05
November	9.11	1.69
December	14.70	4.66
January 1975	--	4.94
February	--	5.81
March	--	5.71
April	--	5.86
May	--	5.91
June	--	5.60
July	--	5.83
August	--	6.20
September	--	5.54

19S/44E-23K1. U.S. Geological Survey observation well drilled in alluvium to bedrock. Diameter 1.25 in (3.17 cm). Depth 30.0 ft (9.1 m). LSD 4,320 ft (1,320 m) above MSL.
HIGHEST WATER LEVEL.--24.37 ft (7.428 m) below LSD, Feb. 17, 1969.
LOWEST STATIC WATER LEVEL.--26.18 ft (7.980 m) below LSD, Dec. 18, 1974.
PERIOD OF RECORD.--February 1969 to September 1975 (discontinued).

Date	Water level
Oct. 9, 1974	26.30
Dec. 18	26.18
Feb. 27, 1975	26.19
Apr. 16	26.19
June 19	26.20
Aug. 13	26.20

10250600 WILDROSE CREEK NEAR WILDROSE STATION, CALIF.--Continued

DISCHARGE, IN CUBIC FEET PER SECOND, WATER YEAR OCTOBER 1974 TO SEPTEMBER 1975
MEAN VALUES

DAY	OCT	NOV	DEC	JAN	FEB	MAR	APR	MAY	JUN	JUL	AUG	SEP
1	0		0									0
2	0		0									0
3	0		0									0
4	0		.03									0
5	0		0									0
6	0		0									0
7	0		0									2.7
8	0		0									0
9	0		0									0
10	0		0									0
11	0		0									0
12	0		0									0
13	0		0									0
14	0		0									0
15	0		0									0
16	0		0									0
17	0		0									0
18	0		0									0
19	0		0									0
20	0		0									0
21	0		0									0
22	0		0									0
23	0		0									0
24	0		0									0
25	0		0									0
26	.01		0									0
27	0		0									0
28	0		0									0
29	0		0		---							0
30	0		0		---							0
31	0	---	0		---		---		---			---
TOTAL	.01	0	.03	0	0	0	0	0	0	0	0	2.7
MEAN	.0003	0	.001	0	0	0	0	0	0	0	0	.090
MAX	.01	0	.03	0	0	0	0	0	0	0	0	2.7
MIN	0	0	0	0	0	0	0	0	0	0	0	0
AC-FT	.02	0	.06	0	0	0	0	0	0	0	0	5.4

WTR YR 1975 TOTAL 2.74 MEAN .0080 MAX 2.7 MIN 0 AC-FT 5.4

Peak discharge (base, 5.0 ft^3/s).--Sept. 7 (time unknown) 119 ft^3/s (1.73 ft).

10250800 DARWIN CREEK NEAR DARWIN, CALIF.

LOCATION.--Lat 36°19'14", long 117°31'23", in NW¼SE¼SW¼ sec.34, T.18 S., R.41 E., Inyo County, on left bank 510 ft (155 m) downstream from Darwin Falls, 1.6 mi (2.6 km) upstream from unnamed tributary, and 5.2 mi (8.4 km) northeast of Darwin.

DRAINAGE AREA.--173 mi^2 (448 km^2).

PERIOD OF RECORD.--October 1962 to current year.

GAGE.--Water-stage recorder. Altitude of gage is 2,640 ft (805 m), from topographic map. U.S. Weather Bureau nonrecording rain gage at Darwin. Prior to Aug. 6, 1970, at site 190 ft (58 m) downstream at same datum.

AVERAGE DISCHARGE.--13 years, 0.45 ft^3/s (0.0127 m^3/s), 326 acre-ft/yr (402,000 m^3/yr).

EXTREMES.--Current year: Maximum discharge, 0.54 ft^3/s (0.015 m^3/s) Mar. 11 (gage height, 2.70 ft or 0.823 m); minimum daily, 0.13 ft^3/s (0.004 m^3/s) July 11, 23, 24, 26.
Period of record: Maximum discharge, 4,400 ft^3/s (125 m^3/s) Jan. 25, 1969 (gage height, 8.40 ft or 2.560 m, at site then in use, from floodmarks), on basis of slope-conveyance measurement of maximum flow; maximum gage height, 20.42 ft (6.224 m), present site from floodmarks, date and discharge unknown; minimum daily discharge, 0.05 ft^3/s (0.001 m^3/s) Aug. 30 to Sept. 4, 1969.

REMARKS.--Records fair. No regulation above station. Town of Darwin pumps water above station for municipal supply.

DISCHARGE, IN CUBIC FEET PER SECOND, WATER YEAR OCTOBER 1974 TO SEPTEMBER 1975
MEAN VALUES

DAY	OCT	NOV	DEC	JAN	FEB	MAR	APR	MAY	JUN	JUL	AUG	SEP
1	.18	.24	.27	.37	.34	.34	.30	.23	.16	.14	.16	.19
2	.18	.24	.27	.37	.34	.34	.30	.20	.16	.14	.15	.18
3	.18	.24	.27	.37	.34	.30	.34	.21	.16	.14	.16	.17
4	.21	.24	.33	.37	.34	.30	.34	.21	.16	.14	.17	.19
5	.21	.24	.33	.37	.34	.34	.34	.21	.16	.14	.16	.19
6	.24	.24	.33	.37	.34	.34	.30	.21	.16	.14	.14	.19
7	.27	.21	.33	.37	.34	.34	.24	.21	.16	.14	.15	.20
8	.24	.21	.33	.37	.34	.34	.21	.20	.16	.14	.14	.21
9	.24	.24	.33	.37	.37	.34	.21	.18	.16	.15	.15	.25
10	.21	.24	.33	.37	.34	.34	.21	.18	.16	.15	.16	.23
11	.18	.24	.33	.37	.34	.37	.24	.18	.16	.13	.15	.21
12	.18	.24	.33	.37	.34	.30	.21	.18	.16	.14	.16	.20
13	.18	.24	.33	.37	.34	.30	.21	.19	.16	.14	.16	.20
14	.18	.27	.33	.37	.34	.30	.21	.19	.16	.15	.17	.18
15	.18	.27	.33	.37	.34	.30	.24	.19	.16	.15	.17	.19
16	.18	.27	.33	.37	.34	.30	.27	.19	.16	.15	.17	.18
17	.18	.27	.33	.37	.34	.30	.27	.17	.16	.15	.17	.20
18	.18	.27	.33	.37	.34	.30	.26	.17	.16	.16	.17	.21
19	.18	.27	.37	.37	.34	.34	.24	.16	.16	.16	.19	.20
20	.18	.27	.37	.37	.34	.30	.24	.16	.16	.15	.20	.21
21	.21	.27	.37	.37	.34	.30	.24	.16	.16	.15	.22	.22
22	.21	.27	.37	.37	.34	.30	.24	.16	.14	.16	.19	.21
23	.21	.27	.37	.37	.34	.30	.24	.16	.14	.13	.19	.21
24	.21	.27	.37	.37	.34	.30	.24	.16	.14	.13	.19	.21
25	.21	.27	.37	.34	.34	.30	.24	.16	.14	.14	.19	.20
26	.21	.27	.37	.34	.34	.30	.24	.16	.14	.13	.19	.20
27	.21	.27	.37	.34	.34	.30	.21	.16	.14	.14	.19	.20
28	.21	.27	.37	.34	.34	.30	.21	.16	.14	.17	.19	.20
29	.21	.27	.37	.34	---	.34	.21	.16	.14	.15	.19	.20
30	.27	.27	.37	.34	---	.34	.23	.16	.14	.15	.18	.21
31	.24	---	.37	.34	---	.30	---	.16	---	.16	.17	---
TOTAL	6.36	7.65	10.57	11.26	9.55	9.81	7.48	5.58	4.62	4.51	5.34	6.04
MEAN	.21	.26	.34	.36	.34	.32	.25	.18	.15	.15	.17	.20
MAX	.27	.27	.37	.37	.37	.37	.34	.23	.16	.17	.22	.25
MIN	.18	.21	.27	.34	.34	.30	.21	.16	.14	.13	.14	.17
AC-FT	13	15	21	22	19	19	15	11	9.2	8.9	11	12
(a)	1.4	.23	.64	0	.07	.57	--	--	--	--	--	--

CAL YR 1974 TOTAL 81.81 MEAN .22 MAX .49 MIN .10 AC-FT 162
WTR YR 1975 TOTAL 88.77 MEAN .24 MAX .37 MIN .13 AC-FT 176

Peak discharge (base, 10 ft^3/s).--No peak above base.

a Precipitation, in inches (discontinued Mar. 31, 1975).

10251100 SALT CREEK NEAR STOVEPIPE WELLS, CALIF.

LOCATION.--Lat 36°35'58", long 117°00'46", in NE¼ sec.6, T.16 S., R.46 E., Inyo County, Death Valley National Monument, on left bank 3.0 mi (4.8 km) southeast of intersection of State Highway 190 and Stovepipe Wells Road, and 7.4 mi (11.9 km) east of Stovepipe Wells Hotel.

PERIOD OF RECORD.--February 1974 to current year.

GAGE.--Water-stage recorder and Parshall flume. Altitude of gage is -180 ft (-55 m), from topographic map.

EXTREMES.--Current year: Maximum discharge, 10 ft^3/s (0.28 m^3/s) Sept. 10 (gage height, 3.09 ft or 0.942 m); minimum daily, 0.07 ft^3/s (0.002 m^3/s) June 16, 17.
Period of record: Maximum discharge, 80 ft^3/s (2.27 m^3/s) July 30, 1974, field estimate of peak flow (gage height, 3.27 ft or 0.997 m); minimum daily, 0.06 ft^3/s (0.002 m^3/s) June 16, 24, 25, 1974.

REMARKS.--Records good below 6.0 ft^3/s (0.17 m^3/s) and poor above. No regulation or diversion above station.

DISCHARGE, IN CUBIC FEET PER SECOND, WATER YEAR OCTOBER 1974 TO SEPTEMBER 1975
MEAN VALUES

DAY	OCT	NOV	DEC	JAN	FEB	MAR	APR	MAY	JUN	JUL	AUG	SEP
1	.11	.19	.30	.48	.58	.62	.55	.43	.16	.08	.13	.11
2	.13	.20	.30	.47	.59	.60	.55	.42	.14	.08	.13	.12
3	.12	.19	.31	.48	.62	.61	.58	.41	.14	.08	.13	.12
4	.11	.19	.37	.50	.61	.64	.52	.37	.13	.08	.11	.12
5	.10	.19	.33	.50	.58	.72	.49	.37	.12	.08	.10	.12
6	.10	.18	.33	.53	.59	.66	.55	.38	.10	.09	.08	.13
7	.15	.19	.34	.52	.61	.63	.57	.39	.09	.09	.09	.12
8	.16	.18	.34	.55	.60	.64	.57	.39	.09	.09	.09	.12
9	.15	.18	.35	.53	.62	.66	.58	.37	.09	.09	.10	.14
10	.15	.19	.36	.51	.60	.66	.59	.36	.08	.09	.10	3.2
11	.15	.19	.36	.51	.59	.67	1.1	.35	.09	.09	.09	.42
12	.14	.19	.37	.51	.61	.65	.94	.33	.09	.08	.10	.17
13	.14	.20	.37	.53	.62	.63	.67	.31	.09	.08	.10	.17
14	.15	.20	.38	.54	.62	.62	.59	.30	.08	.08	.10	.17
15	.15	.20	.38	.55	.57	.62	.53	.27	.08	.08	.11	.18
16	.15	.21	.39	.56	.58	.60	.55	.25	.07	.08	.10	.19
17	.16	.22	.40	.54	.53	.58	.57	.26	.07	.08	.11	.19
18	.16	.22	.41	.55	.57	.62	.56	.26	.08	.09	.10	.20
19	.16	.23	.41	.55	.59	.63	.55	.23	.09	.09	.10	.19
20	.16	.24	.42	.57	.62	.64	.54	.26	.10	.09	.12	.19
21	.15	.26	.43	.56	.56	.60	.53	.28	.10	.10	.12	.18
22	.15	.25	.43	.53	.56	.57	.49	.28	.09	.10	.12	.19
23	.16	.24	.41	.55	.60	.55	.49	.28	.08	.10	.11	.19
24	.16	.26	.42	.57	.62	.59	.48	.26	.08	.11	.11	.19
25	.17	.27	.45	.57	.63	.61	.45	.23	.08	.11	.11	.20
26	.18	.27	.45	.59	.62	.52	.43	.23	.09	.11	.11	.20
27	.17	.28	.46	.55	.62	.53	.44	.21	.09	.09	.11	.20
28	.17	.28	.51	.53	.62	.55	.44	.19	.08	.12	.12	.20
29	.22	.29	.65	.56	---	.56	.41	.17	.08	.11	.12	.20
30	.20	.29	.52	.57	---	.59	.45	.18	.08	.10	.13	.20
31	.20	---	.51	.57	---	.60	---	.17	---	.12	.12	---
TOTAL	4.73	6.67	12.46	16.63	16.73	18.97	16.76	9.19	2.83	2.86	3.37	8.32
MEAN	.15	.22	.40	.54	.60	.61	.56	.30	.094	.092	.11	.28
MAX	.22	.29	.65	.59	.63	.72	1.1	.43	.16	.12	.13	3.2
MIN	.10	.18	.30	.47	.53	.52	.41	.17	.07	.08	.08	.11
AC-FT	9.4	13	25	33	33	38	33	18	5.6	5.7	6.7	17

CAL YR 1974	TOTAL	---	MEAN	---	MAX	---	MIN	---	AC-FT	---
WTR YR 1975	TOTAL	119.52	MEAN	.33	MAX	3.2	MIN	.07	AC-FT	237

Peak discharge (5.0 ft^3/s).--Sept. 10 (1345) 10 ft^3/s (3.09 ft).

10251300 AMARGOSA RIVER AT TECOPA, CALIF.

LOCATION.--Lat 35°50'53", long 116°13'43", in NW¼NW¼SE¼ sec.9, T.20 N., R.7 E., Inyo County, on right bank 20 ft (6 m) upstream from county road, and 0.2 mi (0.3 km) west of Tecopa.

PERIOD OF RECORD.--October 1961 to current year.

GAGE.--Water-stage recorder and culvert control. Altitude of gage is 1,310 ft (399 m), from topographic map.

AVERAGE DISCHARGE.--14 years, 2.23 ft^3/s (0.0632 m^3/s), 1,620 acre-ft/yr (2.00 hm^3/yr).

EXTREMES.--Current year: Maximum discharge, 24 ft^3/s (0.68 m^3/s) Sept. 11 (gage height, 3.89 ft or 1.186 m); no flow during several months.
Period of record: Maximum discharge, 5,000 ft^3/s (142 m^3/s), estimated, Feb. 26, 1969 (gage height, 18.34 ft or 5.590 m, from floodmark); no flow many days in most years.

REMARKS.--Records fair.

DISCHARGE, IN CUBIC FEET PER SECOND, WATER YEAR OCTOBER 1974 TO SEPTEMBER 1975
MEAN VALUES

DAY	OCT	NOV	DEC	JAN	FEB	MAR	APR	MAY	JUN	JUL	AUG	SEP
1	0	.02	.96	1.2	1.7	1.4	1.7	.42	.04	0		0
2	0	.02	1.1	.85	1.5	.85	.85	.44	.01	0		0
3	0	.03	1.4	.66	2.5	.96	.96	.36	.01	0		0
4	0	.04	4.5	.75	4.5	1.5	.66	.17	.01	0		0
5	0	.04	7.2	1.1	3.7	2.3	.45	.15	.01	0		0
6	0	.06	4.2	1.5	2.9	2.3	.45	.15	.01	0		0
7	0	.08	3.7	1.7	2.7	1.8	.75	.19	0	0		0
8	0	.10	2.9	1.9	2.3	1.2	.75	.25	0	0		0
9	0	.10	1.1	2.1	1.7	1.8	1.8	.23	.01	0		0
10	0	.12	.75	1.2	1.4	1.7	1.8	.30	.01	0		0
11	0	.13	1.1	1.4	1.2	2.3	1.8	.26	.01	0		10
12	0	.15	1.4	1.1	1.4	2.5	2.0	.34	.01	0		13
13	0	.18	1.7	.85	1.1	2.0	1.5	.16	.01	0		2.6
14	0	.25	1.2	.96	1.2	1.7	1.2	.08	.01	0		.65
15	0	.34	1.2	1.2	1.9	1.7	.75	.07	0	0		.31
16	0	.34	1.7	1.5	.96	1.7	.58	.08	0	0		.15
17	0	.39	1.5	1.9	.66	1.5	.51	.10	0	0		.02
18	0	.39	.96	1.7	.75	1.7	.75	.11	0	0		.02
19	0	.39	.96	1.7	.96	1.8	.96	.07	.01	0		.01
20	0	.45	1.1	2.1	1.5	1.2	.85	.07	0	0		.02
21	0	.58	1.2	3.7	2.1	.75	.85	.11	0	0		0
22	0	.66	1.7	2.5	.96	.51	.58	.11	.01	0		0
23	0	.85	1.1	1.4	1.1	.58	.51	.10	.02	.01		0
24	0	.66	.58	1.5	.96	.85	.58	.08	.02	0		0
25	0	.66	.75	1.4	1.1	.85	.34	.05	.03	0		0
26	0	.75	.85	1.5	1.4	.96	.45	.02	.01	0		0
27	.01	.85	1.4	1.2	1.2	.66	.34	.01	.01	0		0
28	.01	1.4	1.9	1.2	1.4	.66	.46	.01	.01	0		0
29	.01	1.1	3.2	1.2	---	.66	.42	.01	0	0		0
30	.01	.96	2.1	1.5	---	.66	.31	.01	0	0		0
31	.01	---	3.2	2.1	---	.96	---	.08	---	0		---
TOTAL	.05	12.09	58.61	46.57	46.75	42.01	25.91	4.59	.27	.01	0	26.78
MEAN	.002	.40	1.89	1.50	1.67	1.36	.86	.15	.009	.0003	0	.89
MAX	.01	1.4	7.2	3.7	4.5	2.5	2.0	.44	.04	.01	0	13
MIN	0	.02	.58	.66	.66	.51	.31	.01	0	0	0	0
AC-FT	.10	24	116	92	93	83	51	9.1	.5	.02	0	53

CAL YR 1974 TOTAL 256.24 MEAN .70 MAX 18 MIN 0 AC-FT 508
WTR YR 1975 TOTAL 263.64 MEAN .72 MAX 13 MIN 0 AC-FT 523

Peak discharge (base, 15 ft^3/s).--Sept. 11 (1945) 24 ft^3/s (3.89 ft).

10252550 CARUTHERS CREEK NEAR IVANPAH, CALIF.

LOCATION.--Lat 35°14'33", long 115°17'58", in NW¼NW¼NE¼ sec.6, T.13 N., R.16 E., San Bernardino County, on left bank 6.6 mi (10.6 km) south of Ivanpah.

DRAINAGE AREA.--1.13 mi^2 (2.93 km^2).

PERIOD OF RECORD.--October 1963 to current year.

GAGE.--Water-stage recorder. Altitude of gage is 5,640 ft (1,719 m), from topographic map.

AVERAGE DISCHARGE.--12 years, 0.067 ft^3/s (0.0019 m^3/s), 49 acre-ft/yr (64,400 m^3/yr).

EXTREMES.--Current year: Maximum discharge, 0.44 ft^3/s (0.012 m^3/s) Apr. 11 (gage height, 1.39 ft or 0.424 m); no flow most of year.
Period of record: Maximum discharge, 518 ft^3/s (14.7 m^3/s) Aug. 25, 1969 (gage height, 4.77 ft or 1.454 m) on basis of slope-conveyance measurement of maximum flow; no flow most of each year.

REMARKS.--Records good. No regulation or diversion above station.

DISCHARGE, IN CUBIC FEET PER SECOND, WATER YEAR OCTOBER 1974 TO SEPTEMBER 1975
MEAN VALUES

DAY	OCT	NOV	DEC	JAN	FEB	MAR	APR	MAY	JUN	JUL	AUG	SEP
1			0			0	.07					
2			0			0	.10					
3			0			0	.07					
4			.04			0	.02					
5			0			0	0					
6			0			0	0					
7			0			0	0					
8			0			0	0					
9			0			0	.11					
10			0			0	.14					
11			0			.08	.27					
12			0			.14	.14					
13			0			.10	.13					
14			0			.07	.13					
15			0			.04	.12					
16			0			.01	.10					
17			0			0	.10					
18			0			0	.07					
19			0			0	.07					
20			0			0	.04					
21			0			0	.04					
22			0			0	.02					
23			0			0	0					
24			0			0	0					
25			0			0	0					
26			0			.03	0					
27			0			0	0					
28			0			0	0					
29			0		---	0	0					
30			0		---	0	0					
31		---	0		---	0	---		---			---
TOTAL	0	0	.04	0	0	.47	1.74	0	0	0	0	0
MEAN	0	0	.001	0	0	.015	.058	0	0	0	0	0
MAX	0	0	.04	0	0	.14	.27	0	0	0	0	0
MIN	0	0	0	0	0	0	0	0	0	0	0	0
AC-FT	0	0	.08	0	0	.9	3.5	0	0	0	0	0

CAL YR 1974 TOTAL 11.54 MEAN .032 MAX 1.4 MIN 0 AC-FT 23
WTR YR 1975 TOTAL 2.25 MEAN .0060 MAX .27 MIN 0 AC-FT 4.5

Peak discharge (base, 10 ft^3/s).--No peak above base.

10254005 SALTON SEA NEAR WESTMORLAND, CALIF.

LOCATION.--Lat 33°11'37", long 115°49'54", in NE¼SE¼SW¼ sec.21, T.11 S., R.11 E., Imperial County, at outer end of third mooring pier from western shore at Sandy Beach, and 15.5 mi (24.9 km) northwest of Westmorland.

DRAINAGE AREA.--8,360 mi² (21,650 km²), approximately.

PERIOD OF RECORD.--November 1904 to current year. Records prior to 1932 are published in WSP 735.

GAGE.--Water-stage recorder. Datum of gage is 250.00 ft (76.2 m) below mean sea level; gage readings have been converted to elevations below mean sea level. See WSP 1734 for history of changes prior to Mar. 2, 1956.

EXTREMES.--Current year: Maximum elevation, 230.2 ft (70.2 m) below mean sea level, June 1-16; minimum, 231.6 ft (70.6 m) below mean sea level, Nov. 2-8.
Period of record: Maximum elevation, 195.9 ft (59.7 m) below mean sea level in February and March 1907; minimum since 1906, 251.6 ft (76.7 m) below mean sea level in November 1924.

REMARKS.--Bottom of sea is 277.7 ft (84.6 m) below mean sea level. See WSP 300, 735, and 918 for condensed history of Salton Sea.

MONTHEND ELEVATIONS, IN FEET, BELOW MEAN SEA LEVEL, WATER YEAR OCTOBER 1974 TO SEPTEMBER 1975

Date	Elevation (feet)	Date	Elevation (feet)
Sept. 30	231.4	Apr. 30	a 230.4
Oct. 31	231.5	May 31	230.3
Nov. 30	231.4	June 30	230.4
Dec. 31	231.4	July 31	230.6
Jan. 31	231.0	Aug. 31	230.8
Feb. 28	230.8	Sept. 30	230.9
Mar. 31	230.6		

a Estimated.

INFLOW TO SALTON SEA

Salton Sea, located near the northeast corner of Imperial County, is a closed basin consisting of 8,360 mi² (21,650 km²).

The following table shows monthly and annual inflow, in acre-feet, for the water year October 1974 to September 1975 and the calendar year January to December 1974. Inflow from Imperial Valley is the sum of flows in Alamo River (see sta 10254730), New River (see sta 10255550), 32 drains and wasteways, and since October 1967 San Felipe Creek (see sta 10255885). Since October 1967 inflow from Coachella Valley is the sum of flows in Whitewater River (see sta 10259540), Salt Creek (see sta 10254050), and 20 drains. Flow in Whitewater River and Salt Creek was measured at gaging stations, that for the drains was furnished by Coachella County Water District (see Salton Sea basin for other flows to the sea). Table also shows amount of flow in Alamo and New Rivers contributed by Mexico as furnished by Imperial Irrigation District. Ungaged drains and natural runoff also contribute inflow to the sea.

	Oct.	Nov.	Dec.	Jan.	Feb.	Mar.	Apr.	May	June	July	Aug.	Sept.
Inflow from Imperial Valley	108,900	85,360	77,070	93,600	92,490	118,400	125,700	127,800	94,060	91,880	93,660	107,900
Coachella Valley	13,630	11,510	10,180	12,580	12,420	13,880	13,680	14,710	14,990	14,950	15,670	16,080

Total cal yr 1974 1,374,000 ac-ft
Total wtr yr 1975 1,381,000 ac-ft

FLOW FROM MEXICO AT INTERNATIONAL BOUNDARY

Alamo River	111	139	153	136	104	127	163	168	168	141	123	129
New River	8,340	8,500	9,770	9,920	8,760	10,230	10,760	9,520	7,370	7,190	7,550	7,470

Cal yr 1974: Alamo River 1,230 ac-ft Wtr yr 1975: 1,660 ac-ft
Cal yr 1974: New River 111,800 ac-ft Wtr yr 1975: 105,400 ac-ft

10254050 SALT CREEK NEAR MECCA, CALIF.

LOCATION.--Lat 33°26'49", long 115°50'33", in NE¼SE¼SW¼ sec.28, T.8 S., R.11 E., Riverside County, on pier of Southern Pacific Railroad bridge, 0.3 mi (0.5 km) upstream from mouth, and 16 mi (26 km) southeast of Mecca.

DRAINAGE AREA.--269 mi^2 (697 km^2).

PERIOD OF RECORD.--January 1961 to current year.

GAGE.--Water-stage recorder. Altitude of gage is 230 ft (70.1 m) below mean sea level (from topographic map).

AVERAGE DISCHARGE.--14 years, 5.84 ft^3/s (0.165 m^3/s), 4,230 acre-ft/yr (5.22 hm^3/yr).

EXTREMES.--Current year: Maximum discharge, 927 ft^3/s (26.3 m^3/s) Oct. 22 (gage height, 7.74 ft or 2.359 m), from rating curve extended above 27 ft^3/s (0.765 m^3/s) on basis of slope-area measurement of peak flow; minimum daily, 1.8 ft^3/s (0.051 m^3/s) July 18, 19.
Period of record: Maximum discharge, 1,260 ft^3/s (35.7 m^3/s) Aug. 10, 1971 (gage height, 6.92 ft or 2.109 m), from rating curve extended above 25 ft^3/s (0.71 m^3/s) on basis of slope-area measurement at gage height 6.62 ft (2.018 m); minimum daily, 0.40 ft^3/s (0.01 m^3/s) Aug. 10, 1966.

REMARKS.--Records fair. No regulation or diversion above station. Flow sustained by irrigation seepage.

DISCHARGE, IN CUBIC FEET PER SECOND, WATER YEAR OCTOBER 1974 TO SEPTEMBER 1975
MEAN VALUES

DAY	OCT	NOV	DEC	JAN	FEB	MAR	APR	MAY	JUN	JUL	AUG	SEP
1	3.5	23	7.0	30	13	12	16	3.8	2.9	9.6	2.7	3.0
2	3.5	20	7.1	22	32	11	30	3.8	2.8	3.3	2.7	3.1
3	3.5	11	7.1	51	25	10	17	3.6	3.8	2.9	2.7	3.5
4	3.5	8.4	35	55	27	10	8.4	3.5	3.1	2.7	2.6	3.5
5	3.5	9.4	26	16	23	12	7.6	3.5	2.9	2.7	2.7	3.4
6	3.6	6.6	14	9.8	38	13	7.1	3.3	2.7	5.4	2.5	3.3
7	3.7	6.0	21	9.4	19	13	6.8	3.3	2.6	19	2.5	16
8	14	5.9	19	9.4	13	12	6.5	3.3	2.5	20	2.4	5.7
9	12	6.0	16	9.2	21	13	8.0	3.3	12	4.3	2.4	5.7
10	5.7	5.9	11	9.0	29	12	19	3.1	22	3.3	2.4	9.2
11	4.6	5.9	12	8.6	34	32	11	3.1	6.5	2.9	2.4	17
12	4.4	5.9	13	8.6	17	51	8.8	3.0	3.5	2.5	2.2	46
13	4.3	6.0	10	8.4	12	57	7.6	2.9	3.3	2.3	2.1	62
14	4.4	6.2	11	8.8	12	46	9.7	2.7	3.1	2.2	1.9	34
15	11	6.3	11	9.0	12	26	31	2.7	4.0	2.1	2.0	41
16	6.0	6.3	9.2	9.2	10	18	17	2.7	75	2.0	2.0	38
17	4.8	6.3	9.0	9.2	9.8	29	20	2.7	50	1.9	2.9	9.4
18	4.5	6.4	9.0	9.2	9.8	23	8.8	2.7	6.2	1.8	8.4	6.3
19	4.4	6.4	8.8	9.0	10	10	6.5	3.0	3.9	1.8	10	5.1
20	4.5	6.5	8.8	9.0	28	8.4	6.2	3.1	3.7	1.9	3.2	4.8
21	4.6	6.6	9.0	9.0	24	8.0	5.9	3.1	3.6	2.0	2.9	4.5
22	103	7.0	9.0	9.0	12	7.5	5.9	3.0	3.5	2.1	2.8	4.2
23	19	6.5	9.4	8.6	9.2	7.1	5.5	3.0	3.5	2.2	2.7	3.9
24	6.2	6.2	8.6	8.6	9.8	6.8	5.2	3.1	6.5	2.3	3.7	4.0
25	5.6	6.2	8.4	9.0	78	6.5	4.8	3.1	7.1	2.3	13	4.0
26	11	6.6	9.0	9.2	46	6.2	4.3	4.4	3.7	2.3	5.2	4.2
27	12	7.0	19	9.4	18	5.9	4.1	33	3.2	36	3.3	4.4
28	13	7.0	17	9.6	13	5.5	3.9	5.9	3.1	3.8	2.7	4.6
29	14	7.0	12	9.2	---	5.5	4.3	3.5	3.0	3.3	2.6	4.6
30	7.5	6.6	27	15	---	5.5	4.1	3.0	3.3	3.0	2.7	4.9
31	12	---	42	21	---	5.6	---	2.7	---	2.7	2.9	---
TOTAL	317.3	231.1	435.4	427.4	604.6	488.5	301.0	130.9	257.0	156.6	107.2	363.3
MEAN	10.2	7.70	14.0	13.8	21.6	15.8	10.0	4.22	8.57	5.05	3.46	12.1
MAX	103	23	42	55	78	57	31	33	75	36	13	62
MIN	3.5	5.9	7.0	8.4	9.2	5.5	3.9	2.7	2.5	1.8	1.9	3.0
AC-FT	629	458	864	848	1200	969	597	260	510	311	213	721

CAL YR 1974 TOTAL 2290.0 MEAN 6.27 MAX 103 MIN 1.6 AC-FT 4540
WTR YR 1975 TOTAL 3820.3 MEAN 10.5 MAX 103 MIN 1.8 AC-FT 7580

10254730 ALAMO RIVER NEAR NILAND, CALIF.

LOCATION.--Lat 33°12'03", long 115°36'07", in NE¼SW¼NE¼ sec.22, T.11 S., R.13 E., Imperial County, on left bank 0.6 mi (1.0 km) upstream from mouth, and 5.8 mi (9.3 km) southwest of Niland.

PERIOD OF RECORD.--January 1943 to current year. Monthly discharge only for January 1943 to September 1960, published in WSP 1734.

GAGE.--Water-stage recorder. Datum of gage is 235 ft (72 m) below mean sea level (from topographic map).

EXTREMES.--Period of record: Maximum daily discharge, 2,080 ft^3/s (58.9 m^3/s) Nov. 27, 1967; minimum daily, 288 ft^3/s (8.16 m^3/s) Jan. 2, 1966.

REMARKS.--Records good. Discharge represents seepage and return flow from irrigated areas.

COOPERATION.--Records furnished by Imperial Irrigation District and reviewed by the Geological Survey.

DISCHARGE, IN CUBIC FEET PER SECOND, WATER YEAR OCTOBER 1974 TO SEPTEMBER 1975
MEAN VALUES

DAY	OCT	NOV	DEC	JAN	FEB	MAR	APR	MAY	JUN	JUL	AUG	SEP
1	1120	829	658	833	951	975	1220	1210	1030	743	809	833
2	1120	805	644	814	913	960	1240	1300	1030	752	829	932
3	1060	752	658	833	875	951	1200	1330	1040	752	838	936
4	1110	738	786	894	842	998	1230	1360	1020	752	800	936
5	1160	762	842	894	852	1000	1250	1310	1000	776	766	955
6	1170	776	705	833	809	1040	1280	1270	998	743	766	1020
7	1140	776	644	719	809	1030	1300	1230	984	719	743	1120
8	1140	809	606	620	805	1040	1310	1230	998	733	781	1210
9	1100	829	530	587	823	1090	1400	1220	1000	743	805	1150
10	1070	800	478	539	866	1110	1690	1210	927	781	866	1010
11	1090	786	535	544	866	1150	1240	1240	880	781	903	951
12	1080	781	587	724	847	1080	979	1240	847	829	903	927
13	1060	776	587	814	875	989	875	1180	847	833	880	922
14	1020	781	630	819	903	936	766	1140	861	847	861	908
15	1070	838	625	861	856	922	805	1170	856	823	866	927
16	1060	838	663	847	861	899	814	1190	856	786	829	955
17	998	823	663	889	899	871	861	1210	847	776	880	1000
18	1040	829	714	908	927	932	979	1240	847	795	936	1060
19	1080	829	700	871	875	951	1040	1250	838	800	894	1040
20	1070	781	710	823	894	1020	1140	1230	866	786	894	1100
21	1030	781	743	795	970	1060	1210	1150	847	809	889	1160
22	1000	757	714	738	960	1110	1220	1150	819	819	856	1070
23	1110	766	738	757	955	1110	1180	1130	786	814	842	1020
24	989	757	667	809	984	1120	1170	1110	776	833	847	1060
25	899	738	597	866	1020	1200	1180	1110	766	838	829	1030
26	922	747	516	875	984	1180	1160	1110	790	847	861	1040
27	894	681	563	903	946	1220	1170	1090	790	847	814	1070
28	852	681	705	875	970	1240	1150	1030	795	899	833	1080
29	833	644	757	852	---	1270	1220	998	790	861	829	1130
30	795	644	747	889	---	1300	1210	979	762	842	833	1090
31	800	---	819	889	---	1250	---	1030	---	814	833	---
TOTAL	31882	23134	20531	24914	25137	33004	34489	36647	26493	24773	26115	30642
MEAN	1028	771	662	804	898	1065	1150	1182	883	799	842	1021
MAX	1170	838	842	908	1020	1300	1690	1360	1040	899	936	1210
MIN	795	644	478	539	805	871	766	979	762	719	743	833
AC-FT	63240	45890	40720	49420	49860	65460	68410	72690	52550	49140	51800	60780

CAL YR 1974	TOTAL	343976	MEAN 942	MAX	1370	MIN	435	AC-FT	682300
WTR YR 1975	TOTAL	337761	MEAN 925	MAX	1690	MIN	478	AC-FT	669900

10254970 NEW RIVER AT INTERNATIONAL BOUNDARY, AT CALEXICO, CALIF.
(National stream-quality accounting network station)

LOCATION.--Lat 32°39'57", long 115°30'08", in NE¼SW¼SE¼ sec.14, T.17 S., R.14 E., Imperial County, at gaging station at Second Street bridge, 0.2 mi (0.3 km) downstream from international boundary, and 0.2 mi (0.3 km) west of Calexico.

PERIOD OF RECORD.--Chemical analyses: August 1969 to July 1971, February 1973 to current year.
Specific conductance: October 1973 to current year.
Water temperatures: October 1973 to current year.
Sediment records: Water year 1975 (partial-record station).

EXTREMES.--Current year:
Specific conductance: Maximum recorded, 8,270 micromhos Mar. 6; minimum recorded, 3,400 micromhos June 2.
Water temperatures: Maximum recorded, 36.0°C Aug. 7; minimum recorded, 11.0°C Feb. 22.
Period of record:
Specific conductance: Maximum recorded, 8,270 micromhos Mar. 6, 1975; minimum recorded, 3,400 micromhos June 2, 1975.
Water temperatures: Maximum recorded, 36.0°C Aug. 7, 1975; minimum recorded, 11.0°C Feb. 22, 1975.

REMARKS.--Records of discharge furnished by Imperial Irrigation District. Periods of missing conductivity and temperature data due to equipment malfunction.

WATER QUALITY DATA, WATER YEAR OCTOBER 1974 TO SEPTEMBER 1975

DATE	TIME	INSTANTANEOUS DISCHARGE (CFS)	DISSOLVED SILICA (SIO2) (MG/L)	DISSOLVED CALCIUM (CA) (MG/L)	DISSOLVED MAGNESIUM (MG) (MG/L)	DISSOLVED SODIUM (NA) (MG/L)	DISSOLVED POTASSIUM (K) (MG/L)	BICARBONATE (HCO3) (MG/L)	CARBONATE (CO3) (MG/L)	ALKALINITY AS CACO3 (MG/L)
OCT.										
29...	1500	124	23	230	110	1000	56	308	--	253
NOV.										
19...	1630	137	23	230	96	1000	81	287	--	235
DEC.										
17...	1500	158	19	260	100	860	43	296	--	243
JAN.										
28...	1100	159	17	280	130	860	35	267	--	219
FEB.										
20...	1420	156	14	230	130	940	45	288	--	236
MAR.										
20...	1430	178	18	230	130	990	70	290	0	238
APR.										
22...	1445	177	17	270	140	1100	64	304	0	249
MAY										
27...	1415	157	18	270	150	980	12	302	0	248
JUNE										
25...	1300	123	17	260	130	1100	49	312	0	256
JULY										
31...	1300	129	22	250	100	1100	63	274	0	225
AUG.										
25...	1600	128	19	230	130	990	40	258	0	212
SEP.										
17...	1300	136	19	230	130	1000	46	289	0	237

DATE	DISSOLVED SULFATE (SO4) (MG/L)	DISSOLVED CHLORIDE (CL) (MG/L)	DISSOLVED FLUORIDE (F) (MG/L)	TOTAL NITRITE PLUS NITRATE (N) (MG/L)	DISSOLVED NITRITE PLUS NITRATE (N) (MG/L)	AMMONIA NITROGEN (N) (MG/L)	TOTAL ORGANIC NITROGEN (N) (MG/L)	TOTAL KJELDAHL NITROGEN (N) (MG/L)	TOTAL NITROGEN (N) (MG/L)	TOTAL NITROGEN (NO3) (MG/L)
OCT.										
29...	660	1700	.6	.03	--	--	--	6.3	6.3	28
NOV.										
19...	650	1700	.6	.08	--	--	--	6.0	6.1	27
DEC.										
17...	680	1500	.6	.35	--	--	--	6.2	6.6	29
JAN.										
28...	760	1500	.6	.25	--	--	--	6.9	7.2	32
FEB.										
20...	820	1600	.7	.26	--	--	--	5.5	5.8	26
MAR.										
20...	780	1600	.9	.83	--	--	--	4.5	5.3	24
APR.										
22...	770	1900	.7	.63	--	--	--	4.1	4.7	21
MAY										
27...	890	1700	.7	.09	--	--	--	6.7	6.8	30
JUNE										
25...	830	1800	.7	4.7	--	--	--	7.9	13	56
JULY										
31...	850	1800	.7	.03	--	--	--	.30	.33	1.5
AUG.										
25...	790	1700	.7	5.2	4.2	3.6	3.8	7.4	13	56
SEP.										
17...	800	1700	.5	.25	.30	4.7	3.8	8.5	8.8	39

10254970 NEW RIVER AT INTERNATIONAL BOUNDARY, AT CALEXICO, CALIF.--Continued

WATER QUALITY DATA, WATER YEAR OCTOBER 1974 TO SEPTEMBER 1975

DATE	TOTAL PHOS-PHORUS (P) (MG/L)	DIS-SOLVED ORTHO. PHOS-PHORUS (P) (MG/L)	DIS-SOLVED ORTHO PHOS-PHATE (PO4) (MG/L)	DIS-SOLVED SOLIDS (RESI-DUE AT 180 C) (MG/L)	DIS-SOLVED SOLIDS (SUM OF CONSTI-TUENTS) (MG/L)	DIS-SOLVED SOLIDS (TONS PER AC-FT)	HARD-NESS (CA,MG) (MG/L)	NON-CAR-BONATE HARD-NESS (MG/L)	PERCENT SODIUM	SODIUM AD-SORP-TION RATIO
OCT.										
29...	1.2	--	--	4170	3930	5.67	1000	770	66	14
NOV.										
19...	1.7	--	--	4160	3920	5.66	970	730	67	14
DEC.										
17...	1.7	--	--	3600	3610	4.90	1100	820	63	12
JAN.										
28...	.98	--	--	3900	3710	5.30	1200	1000	59	11
FEB.										
20...	1.2	--	--	4040	3920	5.49	1100	870	64	12
MAR.										
20...	1.2	--	--	4230	3960	5.75	1100	870	64	13
APR.										
22...	.97	--	--	4730	4410	6.43	1300	1000	64	14
MAY										
27...	1.5	--	--	4680	4170	6.36	1300	1000	62	12
JUNE										
25...	1.4	--	--	4510	4340	6.13	1200	930	66	14
JULY										
31...	1.7	--	--	4630	4320	6.30	1000	810	68	15
AUG.										
25...	1.7	1.0	3.1	4310	4050	5.86	1100	900	65	13
SEP.										
17...	1.5	1.9	5.8	4340	4080	5.90	1100	870	65	13

DATE	SPE-CIFIC CON-DUCT-ANCE (MICRO-MHOS)	PH (UNITS)	TEMPER-ATURE (DEG C)	TUR-BID-ITY (JTU)	TOTAL PHYTO-PLANK-TON (CELLS PER ML)	FECAL COLI-FORM (COL. PER 100 ML)	STREP-TOCOCCI (COL-ONIES PER 100 ML)	TOTAL ORGANIC CARBON (C) (MG/L)	DIS-SOLVED BORON (B) (UG/L)
OCT.									
29...	6490	7.7	19.2	30	160000	2800000	160000	--	--
NOV.									
19...	6530	7.5	19.5	4	36000	3900000	100000	13	--
DEC.									
17...	5830	7.2	14.2	20	14000	2400000	143000	--	--
JAN.									
28...	6180	7.9	14.0	4	22000	970000	310000	--	--
FEB.									
20...	6440	8.0	15.8	20	1700	1300000	345000	27	--
MAR.									
20...	6720	7.6	19.5	20	5500	2400000	200000	--	--
APR.									
22...	7230	8.3	23.0	17	17000	1600000	139000	--	--
MAY									
27...	7800	7.7	27.5	19	15000	5280000	315000	45	--
JUNE									
25...	7070	7.5	27.0	10	38000	8800000	370000	--	--
JULY									
31...	7160	7.7	31.0	20	52000	1000000	320000	--	--
AUG.									
25...	6760	7.3	31.8	15	69000	7800000	180000	26	1400
SEP.									
17...	6000	7.5	32.0	--	37000	10000000	600000	--	1400

10254970 NEW RIVER AT INTERNATIONAL BOUNDARY, AT CALEXICO, CALIF.--Continued

BIOLOGICAL ANALYSES, WATER YEAR OCTOBER 1974 TO SEPTEMBER 1975

PHYTOPLANKTON

DATE	PHYLUM .CLASS ..ORDER ...FAMILY ....GENUS .....SPECIES	COMMON NAME	COUNT (CELLS/ML)	PERCENT OF TOTAL
OCT 29	CHLOROPHYTA	GREEN ALGAE		
	.CHLOROPHYCEAE			
	..CHLOROCOCCALES			
	...OOCYSTACEAE			
	....ANKISTRODESMUS			0
	....KIRCHNERIELLA			0
	...SCENEDESMACEAE			
	....SCENEDESMUS			0
	..VOLVOCALES			
	...CHLAMYDOMONADACEAE			
	....CHLAMYDOMONAS		1300	1
	CHRYSOPHYTA	YELLOW-GREEN ALGAE		
	.BACILLARIOPHYCEAE	DIATOMS		
	..CENTRALES	CENTRIC		
	...COSCINODISCACEAE			
	....CYCLOTELLA		6400	4
	....MELOSIRA		1800	1
	..PENNALES	PENNATE		
	...FRAGILARIACEAE			
	....SYNEDRA			0
	...NAVICULACEAE	NAVICULOID		
	....NAVICULA			0
	...NITZSCHIACEAE			
	....NITZSCHIA		2200	1
	CYANOPHYTA	BLUE-GREEN ALGAE		
	.MYXOPHYCEAE			
	..CHROOCOCCALES			
	...CHROOCOCCACEAE			
	....AGMENELLUM		33000	21
	....ANACYSTIS		990	1
	..OSCILLATORIALES	FILAMENTOUS		
	...OSCILLATORIACEAE			
	....LYNGBYA		10000	6
	....OSCILLATORIA		100000	64
	TOTAL PHYTOPLANKTON		160000	
NOV 19	CHLOROPHYTA	GREEN ALGAE		
	.CHLOROPHYCEAE			
	..CHLOROCOCCALES			
	...OOCYSTACEAE			
	....ANKISTRODESMUS		270	1
	...SCENEDESMACEAE			
	....CORONASTRUM		540	1
	....TETRASTRUM			0
	..VOLVOCALES			
	...CHLAMYDOMONADACEAE			
	....CHLAMYDOMONAS		1500	4
	CHRYSOPHYTA	YELLOW-GREEN ALGAE		
	.BACILLARIOPHYCEAE	DIATOMS		
	..CENTRALES	CENTRIC		
	...COSCINODISCACEAE			
	....CYCLOTELLA		4400	12
	....MELOSIRA		540	1
	..PENNALES	PENNATE		
	...ACHNANTHACEAE			
	....ACHNANTHES		540	1
	...FRAGILARIACEAE			
	....SYNEDRA		630	2
	CYANOPHYTA	BLUE-GREEN ALGAE		
	.MYXOPHYCEAE			
	..CHROOCOCCALES			
	...CHROOCOCCACEAE			
	....ANACYSTIS		1800	5
	..OSCILLATORIALES	FILAMENTOUS		
	...OSCILLATORIACEAE			
	....LYNGBYA		11000	30
	....OSCILLATORIA		15000	42
	....SPIRULINA			0
	TOTAL PHYTOPLANKTON		36000	

10254970 NEW RIVER AT INTERNATIONAL BOUNDARY, AT CALEXICO, CALIF.--Continued

BIOLOGICAL ANALYSES, WATER YEAR OCTOBER 1974 TO SEPTEMBER 1975

PHYTOPLANKTON

DATE	PHYLUM .CLASS ..ORDER ...FAMILY ....GENUS .....SPECIES	COMMON NAME	COUNT (CELLS/ML)	PERCENT OF TOTAL
DEC 17	CHLOROPHYTA	GREEN ALGAE		
	.CHLOROPHYCEAE			
	..CHLOROCOCCALES			
	...SCENEDESMACEAE			
	....SCENEDESMUS		74	1
	..VOLVOCALES			
	...CHLAMYDOMONADACEAE			
	....CHLAMYDOMONAS		290	2
	CHRYSOPHYTA	YELLOW-GREEN ALGAE		
	.BACILLARIOPHYCEAE	DIATOMS		
	..CENTRALES	CENTRIC		
	...COSCINODISCACEAE			
	....CYCLOTELLA		220	2
	..PENNALES	PENNATE		
	...FRAGILARIACEAE			
	....SYNEDRA		590	4
	...GOMPHONEMATACEAE			
	....GOMPHONEMA		74	1
	...NAVICULACEAE	NAVICULOID		
	....AMPHIPRORA		290	2
	....NAVICULA		290	2
	...NITZSCHIACEAE			
	....NITZSCHIA		220	2
	CYANOPHYTA	BLUE-GREEN ALGAE		
	.MYXOPHYCEAE			
	..CHROOCOCCALES			
	...CHROOCOCCACEAE			
	....ANACYSTIS		1300	10
	..OSCILLATORIALES	FILAMENTOUS		
	...OSCILLATORIACEAE			
	....LYNGBYA		5900	43
	....OSCILLATORIA		4400	32
	EUGLENOPHYTA			
	.EUGLENOPHYCEAE			
	..EUGLENALES			
	...EUGLENACEAE			
	....EUGLENA		150	1
	TOTAL PHYTOPLANKTON		14000	
JAN 28	CHLOROPHYTA	GREEN ALGAE		
	.CHLOROPHYCEAE			
	..CHLOROCOCCALES			
	...OOCYSTACEAE			
	....CHLORELLA			0
	...SCENEDESMACEAE			
	....SCENEDESMUS		1200	5
	..VOLVOCALES			
	...CHLAMYDOMONADACEAE			
	....CHLAMYDOMONAS		260	1
	CHRYSOPHYTA	YELLOW-GREEN ALGAE		
	.BACILLARIOPHYCEAE	DIATOMS		
	..CENTRALES	CENTRIC		
	...COSCINODISCACEAE			
	....CYCLOTELLA		520	2
	....MELOSIRA		170	1
	..PENNALES	PENNATE		
	...NAVICULACEAE	NAVICULOID		
	....AMPHIPRORA			0
	...NITZSCHIACEAE			
	....HANTZSCHIA			0
	....NITZSCHIA		430	2
	CYANOPHYTA	BLUE-GREEN ALGAE		
	.MYXOPHYCEAE			
	..CHROOCOCCALES			
	...CHROOCOCCACEAE			
	....ANACYSTIS		12000	56
	..OSCILLATORIALES	FILAMENTOUS		
	...OSCILLATORIACEAE			
	....LYNGBYA		4800	22
	....OSCILLATORIA		2200	10
	TOTAL PHYTOPLANKTON		22000	

10254970 NEW RIVER AT INTERNATIONAL BOUNDARY, AT CALEXICO, CALIF.--Continued

BIOLOGICAL ANALYSES, WATER YEAR OCTOBER 1974 TO SEPTEMBER 1975

PHYTOPLANKTON

DATE	PHYLUM .CLASS ..ORDER ...FAMILY ....GENUS .....SPECIES	COMMON NAME	COUNT (CELLS/ML)	PERCENT OF TOTAL
FEB 20	CHLOROPHYTA	GREEN ALGAE		
	.CHLOROPHYCEAE			
	..CHLOROCOCCALES			
	...OOCYSTACEAE			
	....ANKISTRODESMUS		110	7
	....CHODATELLA		72	4
	...SCENEDESMACEAE			
	....SCENEDESMUS		140	9
	..VOLVOCALES			
	...CHLAMYDOMONADACEAE			
	....CHLAMYDOMONAS		72	4
	CHRYSOPHYTA	YELLOW-GREEN ALGAE		
	.BACILLARIOPHYCEAE	DIATOMS		
	..CENTRALES	CENTRIC		
	...COSCINODISCACEAE			
	....CYCLOTELLA		110	7
	....MELOSIRA		36	2
	..PENNALES	PENNATE		
	...CYMBELLACEAE			
	....CYMBELLA		72	4
	...NAVICULACEAE	NAVICULOID		
	....AMPHIPRORA		180	11
	....NAVICULA		110	7
	....NEIDIUM		36	2
	...NITZSCHIACEAE			
	....NITZSCHIA		320	20
	CYANOPHYTA	BLUE-GREEN ALGAE		
	.MYXOPHYCEAE			
	..CHROOCOCCALES			
	...CHROOCOCCACEAE			
	....ANACYSTIS		390	24
	TOTAL PHYTOPLANKTON		1700	
MAR 20	CHLOROPHYTA	GREEN ALGAE		
	.CHLOROPHYCEAE			
	..CHLOROCOCCALES			
	...OOCYSTACEAE			
	....ANKISTRODESMUS		420	8
	...SCENEDESMACEAE			
	....SCENEDESMUS		2200	39
	..VOLVOCALES			
	...CHLAMYDOMONADACEAE			
	....CHLAMYDOMONAS		1000	18
	CHRYSOPHYTA	YELLOW-GREEN ALGAE		
	.BACILLARIOPHYCEAE	DIATOMS		
	..CENTRALES	CENTRIC		
	...COSCINODISCACEAE			
	....CYCLOTELLA		840	15
	..PENNALES	PENNATE		
	...CYMBELLACEAE			
	....CYMBELLA		84	2
	...FRAGILARIACEAE			
	....SYNEDRA		84	2
	...NAVICULACEAE	NAVICULOID		
	....AMPHIPRORA		84	2
	....NAVICULA		250	5
	...NITZSCHIACEAE			
	....NITZSCHIA		500	9
	EUGLENOPHYTA			
	.EUGLENOPHYCEAE			
	..EUGLENALES			
	...EUGLENACEAE			
	....EUGLENA		84	2
	TOTAL PHYTOPLANKTON		5500	

10254970 NEW RIVER AT INTERNATIONAL BOUNDARY, AT CALEXICO, CALIF,--Continued

BIOLOGICAL ANALYSES, WATER YEAR OCTOBER 1974 TO SEPTEMBER 1975

PHYTOPLANKTON

DATE	PHYLUM .CLASS ..ORDER ...FAMILY ....GENUS .....SPECIES	COMMON NAME	COUNT (CELLS/ML)	PERCENT OF TOTAL
APR 22	CHLOROPHYTA	GREEN ALGAE		
	.CHLOROPHYCEAE			
	..CHLOROCOCCALES			
	...OOCYSTACEAE			
	....ANKISTRODESMUS		1300	7
	...SCENEDESMACEAE			
	....SCENEDESMUS		12000	70
	..VOLVOCALES			
	...CHLAMYDOMONADACEAE			
	....CHLAMYDOMONAS		540	3
	CHRYSOPHYTA	YELLOW-GREEN ALGAE		
	.BACILLARIOPHYCEAE	DIATOMS		
	..CENTRALES	CENTRIC		
	...COSCINODISCACEAE			
	....CYCLOTELLA		1100	6
	..PENNALES	PENNATE		
	...NAVICULACEAE	NAVICULOID		
	....NAVICULA		180	1
	...NITZSCHIACEAE			
	....NITZSCHIA		540	3
	...SURIRELLACEAE			
	....CYMATOPLEURA		180	1
	CYANOPHYTA	BLUE-GREEN ALGAE		
	.MYXOPHYCEAE			
	..CHROOCOCCALES			
	...CHROOCOCCACEAE			
	....ANACYSTIS		1300	7
	TOTAL PHYTOPLANKTON		17000	
MAY 27	CHLOROPHYTA	GREEN ALGAE		
	.CHLOROPHYCEAE			
	..CHLOROCOCCALES			
	...SCENEDESMACEAE			
	....SCENEDESMUS		11000	76
	..VOLVOCALES			
	...CHLAMYDOMONADACEAE			
	....CHLAMYDOMONAS		580	4
	CHRYSOPHYTA	YELLOW-GREEN ALGAE		
	.BACILLARIOPHYCEAE	DIATOMS		
	..CENTRALES	CENTRIC		
	...COSCINODISCACEAE			
	....CYCLOTELLA		1200	8
	..PENNALES	PENNATE		
	...CYMBELLACEAE			
	....CYMBELLA		290	2
	...NITZSCHIACEAE			
	....NITZSCHIA		580	4
	CYANOPHYTA	BLUE-GREEN ALGAE		
	.MYXOPHYCEAE			
	..CHROOCOCCALES			
	...CHROOCOCCACEAE			
	....ANACYSTIS		870	6
	TOTAL PHYTOPLANKTON		15000	

10254970 NEW RIVER AT INTERNATIONAL BOUNDARY, AT CALEXICO, CALIF.--Continued

BIOLOGICAL ANALYSES, WATER YEAR OCTOBER 1974 TO SEPTEMBER 1975

PHYTOPLANKTON

DATE	PHYLUM .CLASS ..ORDER ...FAMILY ....GENUS .....SPECIES	COMMON NAME	COUNT (CELLS/ML)	PERCENT OF TOTAL
JUNE 25	CHLOROPHYTA	GREEN ALGAE		
	.CHLOROPHYCEAE			
	..CHLOROCOCCALES			
	...OOCYSTACEAE			
	....ANKISTRODESMUS		710	2
	....CHODATELLA			0
	....KIRCHNERIELLA			0
	...SCENEDESMACEAE			
	....SCENEDESMUS		7200	19
	..VOLVOCALES			
	...CHLAMYDOMONADACEAE			
	....CHLAMYDOMONAS			0
	CHRYSOPHYTA	YELLOW-GREEN ALGAE		
	.BACILLARIOPHYCEAE	DIATOMS		
	..CENTRALES	CENTRIC		
	...COSCINODISCACEAE			
	....CYCLOTELLA		380	1
	....MELOSIRA			0
	..PENNALES	PENNATE		
	...CYMBELLACEAE			
	....CYMBELLA			0
	...GOMPHONEMATACEAE			
	....GOMPHONEMA			0
	...NAVICULACEAE	NAVICULOID		
	....NAVICULA		270	1
	...NITZSCHIACEAE			
	....HANTZSCHIA			0
	....NITZSCHIA		1200	3
	CYANOPHYTA	BLUE-GREEN ALGAE		
	.MYXOPHYCEAE			
	..CHROOCOCCALES			
	...CHROOCOCCACEAE			
	....AGMENELLUM		2600	7
	....GLOEOCAPSA			0
	..OSCILLATORIALES	FILAMENTOUS		
	...OSCILLATORIACEAE			
	....LYNGBYA		9300	25
	....OSCILLATORIA		14000	37
	....PHORMIDIUM		1500	4
	TOTAL PHYTOPLANKTON		38000	
JULY 31	CHLOROPHYTA	GREEN ALGAE		
	.CHLOROPHYCEAE			
	..CHLOROCOCCALES			
	...OOCYSTACEAE			
	....ANKISTRODESMUS		5800	11
	...SCENEDESMACEAE			
	....SCENEDESMUS		430	1
	CHRYSOPHYTA	YELLOW-GREEN ALGAE		
	.BACILLARIOPHYCEAE	DIATOMS		
	..CENTRALES	CENTRIC		
	...COSCINODISCACEAE			
	....CYCLOTELLA		9600	18
	..PENNALES	PENNATE		
	...CYMBELLACEAE			
	....AMPHORA			0
	...NITZSCHIACEAE			
	....NITZSCHIA			0
	CYANOPHYTA	BLUE-GREEN ALGAE		
	.MYXOPHYCEAE			
	..CHROOCOCCALES			
	...CHROOCOCCACEAE			
	....AGMENELLUM		17000	33
	..OSCILLATORIALES	FILAMENTOUS		
	...OSCILLATORIACEAE			
	....OSCILLATORIA		19000	37
	TOTAL PHYTOPLANKTON		53000	

10254970 NEW RIVER AT INTERNATIONAL BOUNDARY, AT CALEXICO, CALIF.--Continued

BIOLOGICAL ANALYSES, WATER YEAR OCTOBER 1974 TO SEPTEMBER 1975

PHYTOPLANKTON

DATE	PHYLUM .CLASS ..ORDER ...FAMILY ....GENUS .....SPECIES	COMMON NAME	COUNT (CELLS/ML)	PERCENT OF TOTAL
AUG 25	CHLOROPHYTA	GREEN ALGAE		
	.CHLOROPHYCEAE			
	..CHLOROCOCCALES			
	...OOCYSTACEAE			
	....ANKISTRODESMUS		520	1
	....KIRCHNERIELLA		520	1
	....OOCYSTIS			0
	...SCENEDESMACEAE			
	....SCENEDESMUS		1000	2
	..VOLVOCALES			
	...CHLAMYDOMONADACEAE			
	....CHLAMYDOMONAS			0
	CHRYSOPHYTA	YELLOW-GREEN ALGAE		
	.BACILLARIOPHYCEAE	DIATOMS		
	..CENTRALES	CENTRIC		
	...COSCINODISCACEAE			
	....CYCLOTELLA		5900	9
	..PENNALES	PENNATE		
	...ACHNANTHACEAE			
	....COCCONEIS			0
	...CYMBELLACEAE			
	....AMPHORA			0
	...FRAGILARIACEAE			
	....SYNEDRA			0
	...NAVICULACEAE	NAVICULOID		
	....AMPHIPRORA			0
	....GYROSIGMA			0
	....NAVICULA			0
	....STAURONEIS			0
	...NITZSCHIACEAE			
	....NITZSCHIA		26000	38
	...SURIRELLACEAE			
	....SURIRELLA			0
	CYANOPHYTA	BLUE-GREEN ALGAE		
	.MYXOPHYCEAE			
	..CHROOCOCCALES			
	...CHROOCOCCACEAE			
	....AGMENELLUM		13000	19
	..OSCILLATORIALES	FILAMENTOUS		
	...OSCILLATORIACEAE			
	....LYNGBYA		17000	25
	....OSCILLATORIA		4200	6
	TOTAL PHYTOPLANKTON		69000	
SEP 17	CHLOROPHYTA	GREEN ALGAE		
	.CHLOROPHYCEAE			
	..CHLOROCOCCALES			
	...SCENEDESMACEAE			
	....SCENEDESMUS		200	1
	CHRYSOPHYTA	YELLOW-GREEN ALGAE		
	.BACILLARIOPHYCEAE	DIATOMS		
	..CENTRALES	CENTRIC		
	...COSCINODISCACEAE			
	....CYCLOTELLA		590	2
	..PENNALES	PENNATE		
	...CYMBELLACEAE			
	....AMPHORA		200	1
	...NAVICULACEAE	NAVICULOID		
	....NAVICULA			0
	...NITZSCHIACEAE			
	....NITZSCHIA		2000	5
	CYANOPHYTA	BLUE-GREEN ALGAE		
	.MYXOPHYCEAE			
	..CHROOCOCCALES			
	...CHROOCOCCACEAE			
	....AGMENELLUM		31000	84
	..OSCILLATORIALES	FILAMENTOUS		
	...OSCILLATORIACEAE			
	....OSCILLATORIA		2900	8
	....PHORMIDIUM			0
	TOTAL PHYTOPLANKTON		37000	

10254970 NEW RIVER AT INTERNATIONAL BOUNDARY, AT CALEXICO, CALIF.--Continued

QUALITATIVE AND ASSOCIATED QUANTITATIVE ANALYSES OF BIOLOGICAL DATA, WATER YEAR OCTOBER 1974 TO SEPTEMBER 1975

PERIPHYTON

Date	Length of exposure (days)	Biomass (g/m^2) Dry weight	Biomass (g/m^2) Ash weight	Chlorophyll a (mg/m^2)	Chlorophyll b (mg/m^2)	Biomass pigment ratio	Sampling method
Nov. 19	21	300	280	19	.10	1300	Polyethylene strip
Feb. 20	65	14	12	1.2	.10	1700	Polyethylene strip
Apr. 22	33	25	19	2.6	.40	2300	Polyethylene strip
July 31	36	18	13	34	15	140	Polyethylene strip

WATER QUALITY DATA, WATER YEAR OCTOBER 1974 TO SEPTEMBER 1975

DATE	TIME	TOTAL IRON (FE) (UG/L)	DIS-SOLVED IRON (FE) (UG/L)	TOTAL MAN-GANESE (MN) (UG/L)	SUS-PENDED MAN-GANESE (MN) (UG/L)	DIS-SOLVED MAN-GANESE (MN) (UG/L)	TOTAL ARSENIC (AS) (UG/L)	SUS-PENDED ARSENIC (AS) (UG/L)	DIS-SOLVED ARSENIC (AS) (UG/L)	TOTAL CAD-MIUM (CD) (UG/L)	SUS-PENDED CAD-MIUM (CD) (UG/L)
NOV. 19...	1630	700	70	120	0	130	29	0	32	<10	<10
FEB. 20...	1420	1800	60	180	50	130	7	3	4	<10	<7
MAY 27...	1415	960	250	230	90	140	11	1	10	<10	<10
AUG. 25...	1600	1300	80	160	30	130	22	7	15	10	9

DATE	DIS-SOLVED CAD-MIUM (CD) (UG/L)	TOTAL CHRO-MIUM (CR) (UG/L)	SUS-PENDED CHRO-MIUM (CR) (UG/L)	DIS-SOLVED CHRO-MIUM (CR) (UG/L)	TOTAL COBALT (CO) (UG/L)	SUS-PENDED COBALT (CO) (UG/L)	DIS-SOLVED COBALT (CO) (UG/L)	TOTAL COPPER (CU) (UG/L)	SUS-PENDED COPPER (CU) (UG/L)	DIS-SOLVED COPPER (CU) (UG/L)	TOTAL LEAD (PB) (UG/L)
NOV. 19...	0	<10	<10	0	<50	<50	0	20	15	5	<100
FEB. 20...	3	20	0	20	<50	<50	0	40	32	8	<100
MAY 27...	0	0	0	0	50	49	1	30	22	8	<100
AUG. 25...	1	30	10	20	70	70	0	30	26	4	200

DATE	SUS-PENDED LEAD (PB) (UG/L)	DIS-SOLVED LEAD (PB) (UG/L)	TOTAL MERCURY (HG) (UG/L)	SUS-PENDED MERCURY (HG) (UG/L)	DIS-SOLVED MERCURY (HG) (UG/L)	TOTAL SELE-NIUM (SE) (UG/L)	SUS-PENDED SELE-NIUM (SE) (UG/L)	DIS-SOLVED SELE-NIUM (SE) (UG/L)	TOTAL ZINC (ZN) (UG/L)	SUS-PENDED ZINC (ZN) (UG/L)	DIS-SOLVED ZINC (ZN) (UG/L)
NOV. 19...	<97	3	.0	.0	.0	2	0	2	30	0	40
FEB. 20...	<92	8	.1	.0	.1	3	2	1	100	20	80
MAY 27...	<97	3	--	--	.0	3	0	3	100	60	40
AUG. 25...	190	7	.2	.1	.1	3	2	1	490	440	50

10254970 NEW RIVER AT INTERNATIONAL BOUNDARY, AT CALEXICO, CALIF.--Continued

SPECIFIC CONDUCTANCE (MICROMHOS/CM AT 25 DEG. C), WATER YEAR OCTOBER 1974 TO SEPTEMBER 1975

	OCTOBER			NOVEMBER			DECEMBER			JANUARY		
DAY	MAX	MIN	MEAN	MAX	MIN	MEAN	MAX	MIN	MEAN	MAX	MIN	MEAN
1	---	---	---	---	---	---	6910	6680	6750	5340	5020	5200
2	---	---	---	---	---	---	6820	6630	6720	5360	4880	5050
3	---	---	---	---	---	---	6660	6570	6620	---	---	---
4	---	---	---	---	---	---	6570	6510	6540	---	---	---
5	---	---	---	---	---	---	6580	6480	6530	6140	5600	5960
6	---	---	---	---	---	---	6710	6480	6560	6270	5680	5980
7	---	---	---	6870	5840	6140	6750	6560	6650	5920	5380	5680
8	---	---	---	6050	5680	5860	6650	6550	6590	---	---	---
9	---	---	---	6000	5630	5820	6660	6510	6590	---	---	---
10	---	---	---	5930	5680	5820	6620	6470	6540	---	---	---
11	---	---	---	5920	5610	5750	6500	6220	6400	---	---	---
12	---	---	---	5820	5570	5680	6290	5870	6070	---	---	---
13	---	---	---	5870	5600	5740	6120	5740	5960	---	---	---
14	---	---	---	5720	5590	5640	6360	5720	6070	5400	4590	4830
15	---	---	---	6280	5640	5960	6240	6140	6190	5960	4670	5200
16	---	---	---	6340	6040	6180	6120	5900	6030	6150	5670	5910
17	---	---	---	6470	6020	6200	5990	5830	5940	6120	5690	5920
18	---	---	---	6420	6120	6290	---	---	---	6370	5930	6120
19	---	---	---	6650	6300	6480	5980	5710	5830	6280	5790	6090
20	---	---	---	7170	6580	6740	6010	5690	5840	6470	5980	6200
21	---	---	---	6820	6680	6740	6090	5710	5860	6380	5950	6150
22	---	---	---	6820	6680	6740	5900	5630	5750	7160	6090	6550
23	---	---	---	7180	6800	6980	6320	5810	6150	---	---	---
24	---	---	---	7180	6940	7050	6330	6060	6180	---	---	---
25	---	---	---	7150	6880	6990	6190	5650	5910	---	---	---
26	---	---	---	7030	6690	6850	5890	5620	5740	---	---	---
27	---	---	---	6840	6710	6770	5910	5430	5690	6100	5610	5880
28	---	---	---	6810	6640	6690	5460	4810	5070	7340	6020	7090
29	6580	6340	6470	6850	6700	6770	5050	4720	4870	7330	6930	7140
30	6670	6310	6500	6770	6680	6710	5140	4910	5010	7230	6910	7110
31	6730	6260	6510	---	---	---	5420	4720	5030	7150	6850	7020
MONTH	---	---	---	7180	5570	6360	6910	4720	6060	---	---	---

	FEBRUARY			MARCH			APRIL			MAY		
DAY	MAX	MIN	MEAN	MAX	MIN	MEAN	MAX	MIN	MEAN	MAX	MIN	MEAN
1	7170	7020	7080	6170	5680	5880	6960	6760	6850	7660	7250	7400
2	7230	7020	7120	---	---	---	7260	6890	7070	7860	7270	7530
3	7110	6880	7000	---	---	---	7510	6730	7210	8140	7250	7960
4	7000	6830	6910	---	---	---	7070	6620	6890	7790	7210	7420
5	7090	6790	6940	---	---	---	7120	6710	6860	7740	7340	7600
6	7100	6890	7000	8270	7250	7790	6920	6620	6770	7780	4970	6400
7	7020	6770	6880	7490	6380	6940	7210	6670	6930	7830	5310	6830
8	6920	6620	6770	6710	6230	6450	7240	6900	7090	6710	6520	6610
9	6700	6490	6600	6610	6160	6350	7290	6440	6920	6540	6330	6430
10	6830	6450	6600	6500	6300	6400	---	---	---	6820	6040	6450
11	6770	6170	6430	6580	6190	6380	---	---	---	7250	5940	6330
12	6660	5850	6320	6970	6350	6570	---	---	---	6530	5910	6300
13	6760	6060	6390	7080	6520	6790	---	---	---	5890	4790	5420
14	6390	6010	6200	6940	6420	6700	---	---	---	---	---	---
15	6700	6000	6310	7010	6570	6790	---	---	---	6320	6240	6280
16	6590	5990	6340	7130	6520	6790	---	---	---	6500	6130	6250
17	6910	6430	6670	7270	6930	7100	---	---	---	---	---	---
18	6800	6470	6610	7350	6820	7060	---	---	---	---	---	---
19	6920	6200	6550	7220	6680	6930	---	---	---	5800	5130	5500
20	6680	6380	6550	6880	6700	6720	---	---	---	---	---	---
21	6950	6390	6470	7030	6790	6930	---	---	---	---	---	---
22	6690	6500	6580	7170	6950	7050	7640	7040	7540	5500	4850	5300
23	6820	6570	6680	7220	6690	6920	7770	7330	7600	---	---	---
24	6900	6520	6710	7380	6360	6840	7930	7620	7790	---	---	---
25	6760	6170	6510	6680	6190	6430	7960	7020	7620	---	---	---
26	6440	5950	6250	7270	6370	6790	7560	7210	7430	---	---	---
27	6550	5950	6290	7550	7100	7290	7870	7550	7700	7900	7170	7550
28	6330	6010	6190	7350	7110	7230	7960	7190	7660	7310	6690	7030
29	---	---	---	7370	6860	7150	---	---	---	7190	5840	6690
30	---	---	---	7280	6410	6820	---	---	---	7230	6320	6860
31	---	---	---	7500	6730	7170	---	---	---	7320	6060	6790
MONTH	7230	5850	6610	8270	5680	6820	---	---	---	---	---	---

10254970 NEW RIVER AT INTERNATIONAL BOUNDARY, AT CALEXICO, CALIF.--Continued

SPECIFIC CONDUCTANCE (MICROMHOS/CM AT 25 DEG. C), WATER YEAR OCTOBER 1974 TO SEPTEMBER 1975

	JUNE			JULY			AUGUST			SEPTEMBER		
DAY	MAX	MIN	MEAN	MAX	MIN	MEAN	MAX	MIN	MEAN	MAX	MIN	MEAN
1	6870	4330	5910	7520	7130	7300	---	---	---	7000	6570	6780
2	6250	3400	4890	7730	7160	7480	---	---	---	7180	6190	6680
3	6570	3480	4860	7900	7200	7540	---	---	---	7340	6330	6750
4	6620	4570	6120	7700	6950	7290	8200	7490	7860	7800	6420	7240
5	6650	6360	6490	7370	6810	7110	8110	7310	7660	7520	6380	6990
6	6870	6310	6520	7180	6690	6920	7900	7270	7530	7250	6760	7050
7	7150	4500	5690	7240	6580	6910	7830	6950	7520	7290	5340	6480
8	7250	5420	6690	7600	7030	7330	7910	7220	7550	6950	5840	6450
9	7210	6190	6620	7540	6960	7240	7930	7250	7610	5930	5830	5900
10	7080	6610	6790	7440	6750	7110	7840	7260	7510	5830	5520	5690
11	6850	5550	6230	7670	6960	7310	8020	7440	7700	6320	5630	5880
12	5660	4930	5360	7430	6700	7040	8110	7130	7680	6290	5830	6070
13	6970	5160	6190	7270	6890	7100	7890	7220	7540	5790	5350	5560
14	7270	6560	6960	7460	6870	7170	8030	7300	7700	5440	4940	5250
15	7560	6350	6760	7260	6720	6970	8260	7280	7730	7160	4780	5640
16	7610	5600	6600	7290	6760	7040	7900	6980	7480	7820	7120	7400
17	5730	3840	4710	7830	7350	7590	7700	5670	7240	7670	6650	7070
18	5450	4110	4890	8110	7490	7760	7760	5870	7030	7450	6820	7080
19	5450	4950	5210	7900	7340	7650	7890	6540	7390	7730	7130	7320
20	5000	4150	4780	8100	6910	7350	---	---	---	7520	6860	7210
21	5010	4050	4530	7670	7140	7410	---	---	---	7360	6580	7050
22	7360	5010	6270	8120	7350	7790	---	---	---	7490	6920	7210
23	7660	6740	7110	8010	7290	7650	---	---	---	7480	6640	7040
24	7230	6780	7020	7990	7640	7780	---	---	---	7310	6670	7000
25	7670	6940	7250	8230	7150	7900	7300	6450	6840	7350	6670	7000
26	7870	7060	7420	8180	6410	7480	7720	6440	7180	7660	6660	7120
27	7600	7080	7330	7650	6350	7230	7600	6330	7060	7320	6470	6840
28	7760	7010	7350	8040	6650	7320	7550	6420	7280	7160	6680	6850
29	7900	7290	7580	7380	6820	7060	7730	6360	7120	7320	6530	6850
30	7690	6930	7360	7580	6370	7090	7240	6270	6720	6900	6140	6480
31	---	---	---	7660	6630	7380	6980	6470	6780	---	---	---
MONTH	7900	3400	6250	8230	6350	7330	---	---	---	7820	4780	6660

TEMPERATURE (DEG. C) OF WATER, WATER YEAR OCTOBER 1974 TO SEPTEMBER 1975

	OCTOBER			NOVEMBER			DECEMBER			JANUARY		
DAY	MAX	MIN	MEAN	MAX	MIN	MEAN	MAX	MIN	MEAN	MAX	MIN	MEAN
1				---	---	---	16.0	14.0	15.0	---	---	---
2				---	---	---	15.5	13.5	14.5	---	---	---
3				---	---	---	16.0	14.0	15.0	---	---	---
4				---	---	---	16.0	15.0	15.5	---	---	---
5				---	---	---	16.5	14.0	15.0	---	---	---
6				---	---	---	16.0	14.0	15.0	---	---	---
7				---	---	---	16.0	13.5	15.0	---	---	---
8				---	---	---	15.5	14.0	14.5	---	---	---
9				---	---	---	15.5	13.5	14.5	---	---	---
10				---	---	---	14.5	12.5	13.5	---	---	---
11				---	---	---	14.5	12.5	13.5	---	---	---
12				---	---	---	14.5	12.5	13.5	---	---	---
13				---	---	---	14.0	12.0	13.0	---	---	---
14				---	---	---	13.5	12.0	13.0	---	---	---
15				---	---	---	13.5	12.0	13.0	---	---	---
16				---	---	---	14.5	12.5	13.5	---	---	---
17				---	---	---	14.5	12.5	13.0	---	---	---
18				---	---	---	---	---	---	---	---	---
19				19.5	18.0	18.5	---	---	---	---	---	---
20				20.0	18.0	19.0	---	---	---	---	---	---
21				20.0	18.0	19.0	---	---	---	---	---	---
22				19.5	17.5	18.5	---	---	---	---	---	---
23				19.0	16.5	18.0	---	---	---	---	---	---
24				18.5	16.0	17.0	---	---	---	---	---	---
25				18.0	15.5	17.0	---	---	---	---	---	---
26				17.5	15.5	16.5	---	---	---	---	---	---
27				17.0	15.0	16.0	---	---	---	---	---	---
28				17.0	15.0	16.0	---	---	---	15.0	13.5	14.0
29				16.5	14.0	15.5	---	---	---	14.5	12.0	13.5
30				15.5	14.0	15.0	---	---	---	14.5	12.5	13.5
31				---	---	---	---	---	---	15.0	12.5	13.5
MONTH				---	---	---	---	---	---	---	---	---

10254970 NEW RIVER AT INTERNATIONAL BOUNDARY, AT CALEXICO, CALIF.--Continued

TEMPERATURE (DEG. C) OF WATER, WATER YEAR OCTOBER 1974 TO SEPTEMBER 1975

	FEBRUARY			MARCH			APRIL			MAY		
DAY	MAX	MIN	MEAN	MAX	MIN	MEAN	MAX	MIN	MEAN	MAX	MIN	MEAN
1	14.5	11.5	13.5	20.5	17.5	19.0	19.0	16.0	17.5	24.5	21.0	23.0
2	15.0	11.5	13.5	20.5	17.5	19.0	20.0	16.0	18.0	24.5	21.0	23.0
3	14.0	12.5	13.5	20.5	17.5	19.0	21.5	17.5	19.0	26.0	22.0	24.0
4	15.0	12.5	13.5	21.5	17.5	19.5	22.0	18.5	20.0	24.0	20.5	23.0
5	15.5	12.5	14.0	20.0	18.5	19.5	20.5	16.5	18.5	22.0	17.5	19.5
6	16.0	12.5	14.5	18.5	17.0	17.5	19.5	16.5	18.0	22.5	18.5	20.5
7	16.0	13.5	15.0	---	---	---	19.5	15.5	17.5	23.5	20.0	21.5
8	17.0	14.0	15.5	---	---	---	19.0	15.5	17.0	24.5	21.0	22.5
9	17.5	15.0	16.5	---	---	---	18.5	16.0	17.5	25.5	21.5	23.5
10	18.0	15.5	16.5	---	---	---	20.0	16.0	18.0	26.0	22.0	24.0
11	17.5	14.5	16.0	---	---	---	20.5	18.0	19.0	27.0	22.0	25.0
12	17.5	14.5	16.0	---	---	---	21.5	17.0	19.0	28.0	24.5	26.0
13	16.5	15.5	16.0	---	---	---	22.5	18.0	20.5	28.5	25.0	26.5
14	18.0	15.5	16.5	---	---	---	24.0	20.5	22.0	28.5	25.5	27.0
15	16.5	13.5	15.0	---	---	---	23.5	19.0	21.5	28.5	25.5	27.0
16	17.0	14.0	15.0	---	---	---	24.0	20.0	21.5	27.5	24.5	26.0
17	16.0	13.5	15.0	---	---	---	20.5	17.5	19.0	27.5	23.5	25.0
18	16.5	13.0	14.5	---	---	---	22.0	17.5	19.5	27.0	23.5	25.0
19	16.5	13.0	15.0	---	---	---	23.0	19.0	21.0	26.5	23.5	25.0
20	17.5	14.0	15.0	22.0	20.0	21.0	24.0	19.5	21.5	24.5	21.5	23.0
21	16.0	13.0	15.0	21.0	18.5	19.5	25.5	21.0	23.0	23.5	19.0	21.5
22	14.5	11.0	13.0	20.0	17.0	18.5	24.0	21.5	22.5	23.5	19.5	22.0
23	15.5	11.5	13.5	20.5	16.5	18.0	23.0	18.5	21.0	25.5	21.0	23.5
24	16.5	12.5	14.5	21.0	17.0	19.0	23.5	19.0	21.5	27.0	22.5	25.0
25	17.0	13.0	14.5	22.0	19.0	20.0	22.0	19.5	20.5	27.5	24.0	25.5
26	18.0	15.0	16.5	19.0	16.5	18.0	20.5	17.0	19.5	27.5	24.0	25.5
27	19.0	15.5	17.5	19.5	16.0	17.5	22.0	17.0	19.5	28.0	24.5	26.0
28	20.0	17.0	18.5	18.5	16.0	17.0	23.0	18.5	20.5	26.5	24.0	25.0
29	---	---	---	18.0	15.0	16.5	23.5	19.0	21.5	26.5	23.0	25.0
30	---	---	---	19.0	14.5	17.0	23.5	19.0	21.5	27.5	23.0	25.5
31	---	---	---	19.5	15.5	17.5	---	---	---	29.0	24.0	26.5
MONTH	20.0	11.0	15.0	---	---	---	25.5	15.5	20.0	29.0	17.5	24.0

	JUNE			JULY			AUGUST			SEPTEMBER		
DAY	MAX	MIN	MEAN	MAX	MIN	MEAN	MAX	MIN	MEAN	MAX	MIN	MEAN
1	29.5	26.0	27.5	---	---	---	33.0	28.0	30.5	32.0	28.0	29.5
2	29.5	26.0	27.5	---	---	---	33.5	28.0	31.0	32.0	28.5	30.0
3	29.5	26.0	27.5	---	---	---	34.5	29.0	32.0	32.5	28.5	30.5
4	29.0	25.5	27.5	---	---	---	35.0	30.0	33.0	32.5	29.0	30.5
5	30.0	25.5	27.5	---	---	---	35.5	30.5	32.5	33.0	29.0	31.0
6	29.0	26.0	27.0	---	---	---	35.0	30.0	32.0	32.0	28.5	30.0
7	29.0	26.0	27.0	---	---	---	36.0	30.5	32.5	29.5	27.5	28.5
8	28.5	25.0	26.5	---	---	---	35.5	30.0	32.5	31.5	28.0	29.5
9	28.5	24.5	26.5	---	---	---	34.0	29.5	31.5	32.0	28.5	30.0
10	30.0	25.5	27.5	---	---	---	34.5	29.0	31.5	32.0	28.5	30.0
11	30.0	26.0	28.0	---	---	---	35.0	29.5	32.0	30.5	27.5	29.0
12	30.5	26.5	28.5	---	---	---	35.0	29.5	31.5	30.5	27.0	28.5
13	30.5	26.5	28.5	---	---	---	34.0	28.5	31.0	30.5	27.0	28.5
14	32.0	27.5	29.5	---	---	---	34.0	28.0	30.5	30.5	27.0	28.5
15	---	---	---	---	---	---	34.0	28.5	31.5	31.5	28.5	29.5
16	---	---	---	---	---	---	33.0	27.5	30.5	31.5	28.5	30.0
17	---	---	---	---	---	---	32.0	26.0	29.5	31.5	28.5	30.0
18	---	---	---	---	---	---	31.5	26.0	29.0	31.0	27.5	29.0
19	---	---	---	---	---	---	32.5	27.0	29.5	30.5	27.0	28.5
20	---	---	---	---	---	---	31.5	26.5	28.5	30.5	27.0	28.5
21	---	---	---	---	---	---	32.5	26.5	29.5	29.5	27.0	28.0
22	---	---	---	---	---	---	33.5	28.0	30.5	29.0	25.0	27.0
23	---	---	---	---	---	---	33.5	28.0	31.0	28.5	25.0	27.0
24	---	---	---	---	---	---	33.0	27.5	30.5	28.0	24.0	26.0
25	---	---	---	---	---	---	33.5	28.0	30.5	28.5	24.5	26.5
26	---	---	---	---	---	---	32.0	28.0	29.5	28.0	24.5	26.5
27	---	---	---	---	---	---	30.0	26.5	28.0	28.0	24.0	26.0
28	---	---	---	---	---	---	29.5	25.0	27.0	27.5	24.5	26.0
29	---	---	---	---	---	---	29.5	25.0	27.0	27.5	24.0	25.5
30	---	---	---	---	---	---	30.5	26.0	28.0	27.5	24.5	25.5
31	---	---	---	32.5	30.0	31.5	31.0	27.5	29.0	---	---	---
MONTH	---	---	---	---	---	---	36.0	25.0	30.5	33.0	24.0	28.5

10254970 NEW RIVER AT INTERNATIONAL BOUNDARY, AT CALEXICO, CALIF.--Continued

PARTICLE-SIZE DISTRIBUTION OF SUSPENDED SEDIMENT,
WATER YEAR OCTOBER 1974 TO SEPTEMBER 1975

DATE	TIME	INSTANTANEOUS DISCHARGE (CFS)	TEMPERATURE (DEG C)	SUSPENDED SEDIMENT (MG/L)	SUSPENDED SEDIMENT DISCHARGE (T/DAY)	SUS. SED. SIEVE DIAM. % FINER THAN .062 MM
OCT.						
29...	1500	124	19.2	70	23	--
NOV.						
19...	1630	137	19.5	100	37	--
DEC.						
17...	1500	158	14.2	88	38	79
JAN.						
28...	1100	159	14.0	88	38	48
FEB.						
20...	1420	156	15.8	64	27	61
MAR.						
20...	1430	178	19.5	71	34	44
APR.						
22...	1445	177	23.0	84	40	57
MAY						
27...	1415	157	27.5	106	45	32
JUNE						
25...	1300	123	27.0	104	35	45
JULY						
31...	1300	129	31.0	94	33	41
SEP.						
17...	1300	136	32.0	202	74	--

10255550 NEW RIVER NEAR WESTMORLAND, CALIF.

LOCATION.--Lat 33°06'17", long 115°39'49", in SW¼SW¼SW¼ sec.19, T.12 S., R.13 E., Imperial County, on right bank 3.5 mi (5.6 km) upstream from mouth, and 5.2 mi (8.4 km) northwest of Westmorland.

PERIOD OF RECORD.--January 1943 to current year. Monthly discharge only for January 1943 to September 1960, published in WSP 1734.

GAGE.--Water-stage recorder. Altitude of gage is 220 ft (67 m) below mean sea level (from topographic map).

EXTREMES.--Period of record: Maximum daily discharge, 1,180 ft^3/s (33.4 m^3/s) Sept. 19, 1963; minimum daily, 293 ft^3/s (8.30 m^3/s) Jan. 6, 1967.

REMARKS.--Records good. Discharge represents seepage and return flow from irrigated areas.

COOPERATION.--Records furnished by Imperial Irrigation District and reviewed by the Geological Survey.

DISCHARGE, IN CUBIC FEET PER SECOND, WATER YEAR OCTOBER 1974 TO SEPTEMBER 1975
MEAN VALUES

DAY	OCT	NOV	DEC	JAN	FEB	MAR	APR	MAY	JUN	JUL	AUG	SEP
1	601	547	507	611	588	655	710	764	576	543	530	570
2	600	511	517	586	596	655	691	791	582	509	538	572
3	607	523	509	617	586	683	689	779	628	530	551	590
4	578	564	545	638	586	695	702	764	622	530	536	611
5	592	559	532	638	590	664	738	738	622	500	526	570
6	635	564	488	605	578	659	720	734	626	498	528	622
7	613	590	496	636	570	636	722	716	615	530	555	662
8	626	590	496	586	543	672	740	706	598	545	528	645
9	621	598	483	564	540	695	847	716	555	564	540	676
10	613	601	490	561	542	689	998	746	551	549	566	624
11	626	574	473	594	559	662	845	774	540	492	596	601
12	640	611	477	592	559	632	774	768	521	494	568	559
13	605	600	488	555	596	603	662	724	517	477	490	594
14	603	559	513	534	607	584	619	738	553	517	500	584
15	592	542	538	532	628	605	607	732	532	542	509	588
16	543	553	543	588	601	617	641	712	521	498	513	609
17	547	621	472	561	578	622	679	693	540	507	517	643
18	568	600	440	584	603	611	685	693	487	545	530	628
19	609	543	422	580	588	621	720	702	513	553	586	613
20	613	526	396	561	638	628	756	700	530	538	561	607
21	592	528	446	563	605	615	800	672	568	572	576	609
22	598	500	496	570	605	668	793	662	561	561	566	601
23	613	507	498	566	615	689	734	676	549	547	563	586
24	636	505	502	551	641	754	748	697	538	536	547	592
25	568	487	502	551	670	760	734	720	490	536	511	638
26	619	502	481	566	655	736	746	676	511	540	502	634
27	605	515	496	584	655	720	758	724	553	555	505	603
28	584	534	481	588	649	726	768	681	530	580	532	634
29	557	509	536	566	---	746	774	655	572	542	525	607
30	564	530	561	594	---	720	783	615	553	507	525	630
31	582	---	586	576	---	704	---	617	---	532	543	---
TOTAL	18551	16493	15414	17994	16771	20726	22183	22085	16654	16469	16663	18302
MEAN	598	550	497	580	599	669	739	712	555	531	538	610
MAX	640	621	586	638	670	760	998	791	628	580	596	676
MIN	543	487	396	532	540	584	607	615	487	477	490	559
AC-FT	36800	32710	30570	35690	33270	41110	44000	43810	33030	32670	33050	36300

CAL YR 1974 TOTAL 220104 MEAN 603 MAX 806 MIN 396 AC-FT 436600
WTR YR 1975 TOTAL 218305 MEAN 598 MAX 998 MIN 396 AC-FT 433000

10255700 SAN FELIPE CREEK NEAR JULIAN, CALIF.

LOCATION.--Lat 33°07'07", long 116°26'04", San Diego County, in Anza Borrego State Park, on left bank under bridge on State Highway 78 in Sentenac Canyon, 1.0 mi (1.6 km) upstream from Grapevine Canyon, and 10 mi (16 km) northeast of Julian.

DRAINAGE AREA.--89.2 mi^2 (231.0 km^2).

PERIOD OF RECORD.--August 1958 to current year.

GAGE.--Water-stage recorder and concrete low-water control. Datum of gage is 1,872.69 ft (570.796 m) above mean sea level.

AVERAGE DISCHARGE.--17 years, 0.24 ft^3/s (0.0068 m^3/s), 174 acre-ft/yr (215,000 m^3/yr).

EXTREMES.--Current year: Maximum discharge, 1.7 ft^3/s (0.048 m^3/s) Dec. 4 (gage height, 1.45 ft or 0.442 m); no flow Oct. 1 to Nov. 24, May 30 to Sept. 30.
Period of record: Maximum discharge, 1,050 ft^3/s (29.7 m^3/s) Aug. 22, 1967 (gage height, 4.08 ft or 1.244 m), from rating curve extended above 12 ft^3/s (0.34 m^3/s) on basis of slope-area measurement at gage height 3.50 ft (1.067 m); no flow for many days in each year.

REMARKS.--Records good. No regulation or diversion above station.

DISCHARGE, IN CUBIC FEET PER SECOND, WATER YEAR OCTOBER 1974 TO SEPTEMBER 1975
MEAN VALUES

DAY	OCT	NOV	DEC	JAN	FEB	MAR	APR	MAY	JUN	JUL	AUG	SEP
1		0	.12	.21	.30	.32	.34	.17				
2		0	.12	.21	.28	.30	.34	.16				
3		0	.12	.21	.35	.30	.34	.14				
4		0	.73	.22	.40	.30	.30	.15				
5		0	.32	.22	.34	.30	.34	.15				
6		0	.19	.24	.30	.30	.46	.14				
7		0	.18	.24	.30	.34	.51	.14				
8		0	.16	.24	.30	.38	.38	.13				
9		0	.15	.24	.30	.47	.67	.12				
10		0	.15	.24	.34	.51	.42	.12				
11		0	.15	.23	.30	.95	.27	.12				
12		0	.15	.22	.30	.64	.24	.12				
13		0	.16	.23	.30	.52	.24	.10				
14		0	.16	.24	.30	.89	.21	.08				
15		0	.18	.24	.30	.50	.21	.08				
16		0	.18	.24	.30	.38	.21	.08				
17		0	.18	.23	.30	.38	.38	.08				
18		0	.18	.24	.30	.34	.30	.08				
19		0	.18	.24	.30	.34	.21	.08				
20		0	.18	.24	.30	.31	.21	.15				
21		0	.18	.27	.30	.30	.21	.18				
22		0	.18	.24	.29	.30	.21	.10				
23		0	.18	.25	.30	.30	.21	.08				
24		0	.17	.27	.31	.30	.21	.06				
25		.01	.18	.26	.30	.30	.21	.04				
26		.05	.18	.25	.30	.30	.24	.02				
27		.08	.19	.27	.30	.30	.21	.02				
28		.08	.24	.27	.30	.30	.20	.01				
29		.09	.27	.27	---	.30	.19	.01				
30		.10	.24	.28	---	.30	.17	0				
31		---	.24	.31	---	.34	---	0	---			---
TOTAL	0	.41	6.19	7.56	8.61	12.11	8.64	2.91	0	0	0	0
MEAN	0	.014	.20	.24	.31	.39	.29	.094	0	0	0	0
MAX	0	.10	.73	.31	.40	.95	.67	.18	0	0	0	0
MIN	0	0	.12	.21	.28	.30	.17	0	0	0	0	0
AC-FT	0	.8	12	15	17	24	17	5.8	0	0	0	0

CAL YR 1974 TOTAL 51.31 MEAN .14 MAX 3.0 MIN 0 AC-FT 102
WTR YR 1975 TOTAL 46.43 MEAN .13 MAX .95 MIN 0 AC-FT 92

Peak discharge (base, 50 ft^3/s).--No peak above base.

10255800 COYOTE CREEK NEAR BORREGO SPRINGS, CALIF.

LOCATION.--Lat 33°22'06", long 116°25'14", in NE¼NE¼NE¼ sec.26, T.9 S., R.5 E., San Diego County, on left bank 0.5 mi (0.8 km) downstream from Box Canyon, 1.8 mi (2.9 km) northwest of Rancho De Anza, and 8.2 mi (13.2 km) northwest of Borrego Springs.

DRAINAGE AREA.--144 mi^2 (373 km^2).

PERIOD OF RECORD.--October 1950 to current year. Monthly discharge only for October and November 1950, published in WSP 1734.

GAGE.--Water-stage recorder. Altitude of gage is 1,250 ft (381 m), from topographic map. Prior to Mar. 24, 1967, at site 0.6 mi (1.0 km) upstream at different datum.

AVERAGE DISCHARGE.--25 years, 1.87 ft^3/s (0.0530 m^3/s), 1,350 acre-ft/yr (1.66 hm^3/yr).

EXTREMES.--Current year: Maximum discharge, 1,660 ft^3/s (47.0 m^3/s) Sept. 7 (gage height, 13.15 ft or 4.008 m, from floodmark, recorded, 15.57 ft or 4.136 m), from rating curve extended above 2.0 ft^3/s (0.057 m^3/s) on basis of slope-area measurement at gage height 12.5 ft (3.81 m); no flow for many days.
Period of record: Maximum discharge, 3,800 ft^3/s (108 m^3/s) July 28, 1951 (gage height, 14.14 ft or 4.310 m, from floodmarks, site and datum then in use) on basis of slope-area measurement of maximum flow; no flow at times in some years.

REMARKS.--Records good except those for period of no gage-height record, which are poor. No regulation above station. Diversion about 0.5 mi (0.8 km) upstream for irrigation below station since January 1973.

REVISIONS (WATER YEARS).--WRD Calif. 1972: 1969, 1971.

DISCHARGE, IN CUBIC FEET PER SECOND, WATER YEAR OCTOBER 1974 TO SEPTEMBER 1975
MEAN VALUES

DAY	OCT	NOV	DEC	JAN	FEB	MAR	APR	MAY	JUN	JUL	AUG	SEP
1	1.0	.07	.09	.54	.53	.85	.35	.44	.03	.04	.02	0
2	1.1	.01	.09	.46	.53	.73	.35	.39	.05	.04	.01	0
3	.98	0	.15	.49	.73	.73	.35	.33	.05	.04	0	0
4	1.0	.04	4.5	.49	.73	.53	.35	.25	.05	.04	0	0
5	1.1	.08	.60	.43	.73	.44	.35	.23	.05	.04	0	0
6	1.0	.10	.55	.43	.73	.48	.35	.21	.04	.04	0	.01
7	1.2	.11	.50	.41	.73	.40	.35	.27	.03	.04	.01	85
8	1.1	.16	.50	.47	.85	.40	.35	.24	.04	.04	.01	3.0
9	.91	.35	.50	.48	.73	.35	.35	.24	.03	.04	.02	.50
10	.84	.15	.50	.58	.73	.35	.35	.24	.04	.04	.02	.30
11	.75	0	.50	.52	.73	.35	.35	.24	.03	.05	.01	.30
12	.75	0	.50	.38	.73	.35	.40	.36	.04	.05	.01	.30
13	.70	0	.50	.36	.73	.40	.50	.24	.04	.05	.02	.30
14	.70	0	.50	.33	.73	.40	.50	.24	.02	.05	.02	.30
15	.70	0	.50	.35	.73	.35	.50	.24	.02	.05	0	.30
16	.70	.04	.50	.24	.73	.35	.50	.24	.02	.05	.01	8.0
17	.70	.06	.50	.27	.73	.35	.50	.24	.03	.05	.01	1.0
18	.70	.05	.50	.35	.73	.35	.50	.24	.04	.05	0	.50
19	.70	.05	.50	.46	.73	.35	.50	.24	.02	.05	0	.25
20	.70	.04	.50	.47	.73	.35	.50	.24	.01	.05	0	.23
21	.70	.08	.53	.45	.73	.35	.50	.24	.03	.06	.01	.22
22	117	.09	.53	.37	.73	.35	.50	.24	.03	.06	.01	.22
23	2.0	.09	.53	.40	.73	.35	.50	.24	.03	.06	.01	.22
24	.04	.09	.53	.42	.71	.35	.51	.50	.03	.06	0	.21
25	.09	.09	.63	.44	.73	.35	.56	.50	.04	.06	0	.21
26	.10	.09	.63	.44	.73	.37	.51	.10	.04	.07	0	.21
27	.06	.09	.53	.53	.63	.43	.53	.06	.04	.07	0	.20
28	.18	.09	.68	.53	.53	.35	.53	.06	.04	.07	0	.20
29	.35	.09	.62	.53	---	.35	.44	.06	.04	.07	0	.20
30	.24	.09	.58	.53	---	.35	.44	.06	.04	.06	0	.20
31	.03	---	.62	.53	---	.35	---	.01	---	.03	0	---
TOTAL	138.12	2.20	19.39	13.68	19.84	12.81	13.27	7.43	1.04	1.57	.20	102.38
MEAN	4.46	.073	.63	.44	.71	.41	.44	.24	.035	.051	.007	3.41
MAX	117	.35	4.5	.58	.85	.85	.56	.50	.05	.07	.02	85
MIN	.03	0	.09	.24	.53	.35	.35	.01	.01	.03	0	0
AC-FT	274	4.4	38	27	39	25	26	15	2.1	3.1	.4	203

CAL YR 1974 TOTAL 557.31 MEAN 1.53 MAX 121 MIN 0 AC-FT 1110
WTR YR 1975 TOTAL 331.93 MEAN .91 MAX 117 MIN 0 AC-FT 658

Peak discharge (base, 50 ft^3/s).--Oct. 22 (1745) 1,520 ft^3/s (12.80 ft); Sept. 7 (1600) 1,660 ft^3/s (13.15 ft).

NOTE.--No gage-height record Sept. 7-30.

10255810 BORREGO PALM CREEK NEAR BORREGO SPRINGS, CALIF.

LOCATION.--Lat 33°16'44", long 116°25'45", in Anza-Borrego Desert State Park, San Diego County, on left bank 3.3 mi (5.3 km) northwest of Borrego Springs.

DRAINAGE AREA.--21.8 mi^2 (56.5 km^2).

PERIOD OF RECORD.--October 1950 to current year. Prior to October 1960, published as "Palm Canyon Creek near Borrego Springs." Monthly discharge only for October to November 1950, published in WSP 1734.

GAGE.--Water-stage recorder. Altitude of gage is 1,200 ft (366 m), from topographic map.

AVERAGE DISCHARGE.--25 years, 0.32 ft^3/s (0.0091 m^3/s), 232 acre-ft/yr (286,000 m^3/yr).

EXTREMES.--Current year: Maximum discharge, 21 ft^3/s (0.595 m^3/s) Sept. 7 (gage height, 2.87 ft or 0.875 m); no flow most of year.
Period of record: Maximum discharge, 2,000 ft^3/s (56.6 m^3/s), estimated, Aug. 23, 1955 (gage height, 9.9 ft or 3.02 m, from floodmarks); no flow for several months in each year.

REMARKS.--Records fair. No regulation or diversion above station.

DISCHARGE, IN CUBIC FEET PER SECOND, WATER YEAR OCTOBER 1974 TO SEPTEMBER 1975
MEAN VALUES

DAY	OCT	NOV	DEC	JAN	FEB	MAR	APR	MAY	JUN	JUL	AUG	SEP
1					0	.16	.25	.30				0
2					0	.16	.31	.29				0
3					0	.15	.25	.26				0
4					0	.16	.24	.21				0
5					.03	.17	.24	.17				0
6					.06	.17	.30	.15				0
7					.03	.18	.36	.14				.60
8					0	.21	.39	.13				.54
9					0	.36	2.3	.12				.08
10					.17	.32	1.9	.10				0
11					.17	.40	1.3	.09				0
12					.31	.41	1.1	.08				0
13					.28	.33	.78	.07				0
14					.28	.45	.66	.06				0
15					.31	.42	.56	.06				0
16					.19	.36	.46	.05				0
17					.17	.30	.72	.04				0
18					.17	.27	.78	.04				0
19					.17	.27	.56	.03				0
20					.17	.26	.46	.03				0
21					.17	.25	.38	.03				0
22					.17	.25	.35	.02				0
23					.16	.26	.32	.02				0
24					.16	.20	.30	.02				0
25					.16	.20	.29	.02				0
26					.16	.25	.32	.01				0
27					.16	.23	.31	.01				0
28					.16	.22	.28	.01				0
29					---	.21	.30	.01				0
30		---			---	.21	.30	0				0
31					---	.21	---	0	---			---
TOTAL	0	0	0	0	3.81	8.00	17.07	2.57	0	0	0	1.22
MEAN	0	0	0	0	.14	.26	.57	.083	0	0	0	.041
MAX	0	0	0	0	.31	.45	2.3	.30	0	0	0	.60
MIN	0	0	0	0	0	.15	.24	0	0	0	0	0
AC-FT	0	0	0	0	7.6	16	34	5.1	0	0	0	2.4

CAL YR 1974 TOTAL 23.94 MEAN .066 MAX 1.7 MIN 0 AC-FT 47
WTR YR 1975 TOTAL 32.67 MEAN .090 MAX 2.3 MIN 0 AC-FT 65

Peak discharge (base, 15 ft^3/s).--Sept. 7 (1630) 21 ft^3/s (2.87 ft).

10255850 VALLECITO CREEK NEAR JULIAN, CALIF.

LOCATION.--Lat 32°59'10", long 116°25'10", in SW¼NE¼ sec.1, T.14 S., R.5 E., San Diego County, on right bank 0.2 mi (0.3 km) downstream from Cottonwood Wash, and 12.6 mi (20.3 km) southeast of Julian.

DRAINAGE AREA.--39.7 mi^2 (102.8 km^2).

PERIOD OF RECORD.--October 1963 to current year.

GAGE.--Water-stage recorder. Altitude of gage is 1,950 ft (594 m) above mean sea level (from topographic map).

AVERAGE DISCHARGE.--12 years, 0.12 ft^3/s (0.0034 m^3/s), 87 acre-ft/yr (107,000 m^3/yr).

EXTREMES.--Current year: Maximum discharge, 186 ft^3/s (5.27 m^3/s) Sept. 16 (gage height, 4.35 ft or 1.326 m); minimum daily, 0.01 ft^3/s (<0.001 m^3/s) Oct. 1-14, 16.
Period of record: Maximum discharge, 434 ft^3/s (12.3 m^3/s) July 17, 1969 (gage height, 5.82 ft or 1.774 m, from high-water mark in well), from rating curve extended above 160 ft^3/s (4.53 m^3/s) on basis of velocity-area study of maximum flow; no flow at times in some years.

REMARKS.--Records fair except those for periods of no gage-height record, which are poor. No regulation or diversion above station. Precipitation record discontinued Sept. 30, 1972.

DISCHARGE, IN CUBIC FEET PER SECOND, WATER YEAR OCTOBER 1974 TO SEPTEMBER 1975
MEAN VALUES

DAY	OCT	NOV	DEC	JAN	FEB	MAR	APR	MAY	JUN	JUL	AUG	SEP
1	.01	.03	.03	.04	.06	.06	.04	.04	.04	.03	.04	.03
2	.01	.03	.04	.04	.05	.07	.04	.04	.03	.03	.04	.03
3	.01	.03	.04	.05	.05	.07	.03	.04	.03	.03	.04	.04
4	.01	.03	.04	.04	.05	.07	.03	.04	.03	.03	.04	.04
5	.01	.03	.04	.04	.06	.07	.03	.04	.03	.03	.04	.04
6	.01	.03	.04	.04	.06	.07	.03	.04	.03	.03	.04	.04
7	.01	.03	.04	.04	.06	.07	.03	.04	.04	.03	.04	.04
8	.01	.03	.04	.04	.06	.07	.04	.04	.04	.03	.04	8.3
9	.01	.03	.04	.05	.06	.06	.03	.04	.04	.03	.05	.20
10	.01	.03	.04	.05	.06	.06	.03	.04	.04	.03	.05	.10
11	.01	.02	.04	.05	.06	.05	.03	.04	.04	.03	.05	.07
12	.01	.02	.04	.04	.06	.06	.03	.04	.04	.03	.05	.05
13	.01	.02	.04	.04	.06	.06	.04	.04	.05	.03	.05	.04
14	.01	.02	.04	.03	.06	.06	.03	.04	.05	.03	.04	.04
15	.02	.02	.04	.04	.06	.06	.03	.04	.05	.03	.04	.04
16	.01	.03	.04	.04	.06	.06	.03	.04	.04	.03	.04	7.3
17	.02	.03	.04	.04	.06	.06	.04	.04	.04	.03	.04	.10
18	.02	.03	.04	.04	.06	.06	.04	.04	.04	.03	.04	.07
19	.02	.04	.04	.04	.06	.05	.04	.04	.04	.03	.04	.05
20	.02	.04	.04	.04	.06	.04	.04	.04	.04	.03	.04	.04
21	.02	.04	.04	.04	.06	.04	.04	.04	.04	.03	.04	.03
22	.02	.04	.05	.05	.06	.04	.04	.04	.03	.03	.04	.03
23	.03	.04	.05	.05	.06	.04	.04	.04	.03	.03	.04	.03
24	.03	.04	.05	.06	.06	.04	.04	.04	.03	.03	.04	.03
25	.03	.03	.04	.05	.06	.04	.04	.04	.04	.04	.04	.03
26	.03	.03	.04	.06	.07	.04	.04	.04	.03	1.8	.03	.03
27	.03	.03	.04	.06	.06	.04	.04	.04	.03	.60	.03	.03
28	.03	.03	.04	.06	.06	.04	.04	.04	.03	.10	.03	.03
29	.03	.03	.05	.05	---	.04	.04	.04	.03	.06	.03	.03
30	.03	.03	.04	.05	---	.03	.04	.04	.03	.05	.03	.03
31	.03	---	.04	.06	---	.04	---	.04	---	.04	.03	---
TOTAL	.56	.91	1.27	1.42	1.66	1.66	1.08	1.24	1.10	3.41	1.23	16.96
MEAN	.018	.030	.041	.046	.059	.054	.036	.040	.037	.11	.040	.57
MAX	.03	.04	.05	.06	.07	.07	.04	.04	.05	1.8	.05	8.3
MIN	.01	.02	.03	.03	.05	.03	.03	.04	.03	.03	.03	.03
AC-FT	1.1	1.8	2.5	2.8	3.3	3.3	2.1	2.5	2.2	6.8	2.4	34

CAL YR 1974 TOTAL 14.87 MEAN .041 MAX .40 MIN .01 AC-FT 29
WTR YR 1975 TOTAL 32.50 MEAN .089 MAX 8.3 MIN .01 AC-FT 64

Peak discharge (base, 15 ft^3/s)

Date	Time	G.H.	Discharge	Date	Time	G.H.	Discharge
7-26	2115	3.09	56	9-16	1600	4.35	186
9-8	1545	4.12	156				

NOTE.--No gage-height record Apr. 26 to May 28, Sept. 9-30.

10255885 SAN FELIPE CREEK NEAR WESTMORLAND, CALIF.

LOCATION.--Lat 33°07'25", long 115°51'08", in NW¼SW¼ sec.17, T.12 S., R.11 E., Imperial County, on left bank 320 ft (98 m) downstream from U.S. Highway 99, and 14.6 mi (23.5 km) northwest of Westmorland.

DRAINAGE AREA.--1,693 mi^2 (4,385 km^2).

PERIOD OF RECORD.--December 1960 to current year.

GAGE.--Water-stage recorder and crest-stage gage. Altitude of gage is 190 ft (58 m) below mean sea level, from topographic map.

AVERAGE DISCHARGE.--14 years (1961-75), 3.37 ft^3/s (0.0954 m^3/s), 2,440 acre-ft/yr (3.01 hm^3/yr).

EXTREMES.--Current year: Maximum discharge, 4,900 ft^3/s (139 m^3/s) July 27 (gage height, 12.03 ft or 3.667 m), from rating curve extended above 5 ft^3/s (0.14 m^3/s) on basis of slope-area measurements at gage heights 8.23 ft (2.508 m), 9.30 ft (2.835 m), and 12.36 ft (3.767 m); no flow for many months.
Period of record: Maximum discharge, 7,790 ft^3/s (221 m^3/s) Sept. 2, 1967 (gage height, 10.93 ft or 3.332 m), from rating curve extended above 6 ft^3/s (0.17 m^3/s) on basis of slope-area measurements at gage heights 6.56 ft (2.000 m), 10.18 ft (3.103 m), and 10.75 ft (3.277 m); no flow for some months in each year.

REMARKS.--Records poor. No regulation above station. Diversion and pumping for domestic use and irrigation in Borrego Valley 25 mi (40 km) upstream.

DISCHARGE, IN CUBIC FEET PER SECOND, WATER YEAR OCTOBER 1974 TO SEPTEMBER 1975
MEAN VALUES

DAY	OCT	NOV	DEC	JAN	FEB	MAR	APR	MAY	JUN	JUL	AUG	SEP
1	0	.05	.05	.34	.30	.27	.10			0		0
2	0	.05	.05	.34	.30	.27	.10			0		0
3	0	.05	.05	.34	.30	.27	.10			0		0
4	0	.05	29	.34	.30	.27	.10			0		0
5	0	.05	24	.34	.30	1.0	.10			0		0
6	0	.05	2.0	.34	.30	.30	.10			0		0
7	0	.05	.50	.34	.30	.30	.10			0		0
8	0	.05	.10	.34	.30	.50	.10			0		0
9	0	.05	.05	.34	.27	.30	118			0		415
10	0	.05	.05	.34	.27	.30	8.3			0		68
11	0	.05	.05	.34	.27	.25	.50			0		0
12	0	.05	.05	.34	.27	.25	.30			0		0
13	0	.05	.05	.34	.27	.25	.15			0		0
14	0	.05	.05	.34	.27	.25	.10			0		0
15	0	.05	.05	.34	.27	.25	.10			0		0
16	0	.05	.05	.34	.27	.20	.10			0		0
17	0	.05	.05	.34	.27	.20	.10			0		0
18	0	.05	.05	.34	.27	.20	.10			0		0
19	0	.05	.05	.34	.27	.20	.10			0		0
20	0	.05	.05	.34	.27	.20	.15			0		0
21	0	.05	.05	.34	.27	.15	.10			0		0
22	152	.05	.05	.34	.27	.15	.05			0		0
23	28	.05	.05	.34	.27	.15	0			0		0
24	.66	.05	.05	.34	.27	.15	0			0		0
25	.10	.05	.05	.34	.27	.15	0			0		0
26	.09	.05	.05	1.0	.27	.10	0			0		0
27	.08	.05	.05	.34	.27	.10	0			292		0
28	.07	.05	.34	.34	.27	.10	0			.50		0
29	.06	.05	.34	.30	---	.10	0			1.7		0
30	.05	.05	.34	.30	---	.10	0			0		0
31	.05	---	.34	.80	---	.10	---		---	0		---
TOTAL	181.16	1.50	58.06	11.58	7.80	7.38	128.95	0	0	294.20	0	483
MEAN	5.84	.050	1.87	.37	.28	.24	4.30	0	0	9.49	0	16.1
MAX	152	.05	29	1.0	.30	1.0	118	0	0	292	0	415
MIN	0	.05	.05	.30	.27	.10	0	0	0	0	0	0
AC-FT	359	3.0	115	23	15	15	256	0	0	584	0	958

CAL YR 1974 TOTAL 813.87 MEAN 2.23 MAX 382 MIN 0 AC-FT 1610
WTR YR 1975 TOTAL 1173.63 MEAN 3.22 MAX 415 MIN 0 AC-FT 2330

Peak discharge (base, 200 ft^3/s)

Date	Time	G.H.	Discharge	Date	Time	G.H.	Discharge
10-22	1800	8.46	1,230	7-27	0615	12.03	4,900
12-4	1600	6.25	222	9-9	0300	10.00	2,560
4-9	2000	8.02	956				

10256000 WHITEWATER RIVER AT WHITE WATER, CALIF.

LOCATION.--Lat 33°56'48", long 116°38'24", in NW¼NW¼NE¼ sec.2, T.3 S., R.3 E., Riverside County, on right bank 1.5 mi (2.4 km) north of White Water, and 3.5 mi (5.6 km) upstream from San Gorgonio River.

DRAINAGE AREA.--57.4 mi^2 (149 km^2).

PERIOD OF RECORD.--October 1948 to current year.

GAGE.--Water-stage recorder on river; water-stage recorder and Cipolletti weir on diversion 500 ft (152 m) downstream. Datum of gage is 1,610 ft (491 m) above mean sea level. Feb. 24, 1950, to Sept. 30, 1952, and Apr. 13, 1960, to June 19, 1968, supplementary gages at different sites and datums within 200 ft (61 m) of base gage. Since Aug. 12, 1969, supplementary gage at site 1.5 mi (2.4 km) downstream at different datum.

AVERAGE DISCHARGE (River only).--27 years, 16.0 ft^3/s (0.453 m^3/s), 11,590 acre-ft/yr (14.3 hm^3/yr).
(Combined river and infiltration line).--26 years (1949-75), 17.5 ft^3/s (0.496 m^3/s), 12,680 acre-ft/yr (15.6 hm^3/yr).

EXTREMES (River only).--Current year: Maximum discharge, 252 ft^3/s (7.14 m^3/s) Dec. 4 (gage height, 10.75 ft or 3.277 m); minimum daily, 3.8 ft^3/s (0.108 m^3/s) many days in July and August.
Period of record: Maximum discharge, 24,000 ft^3/s (680 m^3/s) Nov. 22, 1965 (gage height, 13.60 ft or 4.145 m), from rating curve extended above 660 ft^3/s (18.7 m^3/s) on basis of field estimate of maximum flow; no flow at times in some years.
Maximum discharge, 42,000 ft^3/s (1,190 m^3/s) Mar. 2, 1938, by slope-area measurement of peak flow, at site 2.5 mi (4.0 m) upstream, drainage area, 51.4 mi^2 (133 km^2).

REMARKS.--Records poor. White Water Mutual Water Co. diverts 50 ft (15 m) downstream. Monthly discharge is combined with flow from infiltration line that bypasses station. No regulation above station. Water is diverted out of basin about 15 mi (24 km) upstream to powerplants in San Gorgonio River basin and then to an area north of Banning for irrigation. One small diversion for domestic use and one for irrigation are made 2 to 3 mi (3.2 to 4.8 km) upstream.

COOPERATION.--Records of bypass in infiltration line furnished by White Water Mutual Water Co.; records of diversion, 15 mi (24 km) upstream, furnished by Southern California Edison Co.

DISCHARGE, IN CUBIC FEET PER SECOND, WATER YEAR OCTOBER 1974 TO SEPTEMBER 1975
MEAN VALUES

DAY	OCT	NOV	DEC	JAN	FEB	MAR	APR	MAY	JUN	JUL	AUG	SEP
1	9.0	13	10	8.0	6.0	7.0	11	8.5	6.2	4.4	3.8	4.1
2	9.0	12	10	8.5	6.0	7.0	9.0	8.5	6.0	4.4	3.8	4.1
3	9.0	12	10	7.5	9.0	7.5	6.5	8.5	6.0	4.3	3.8	4.1
4	9.0	12	54	9.0	6.5	8.0	6.5	8.5	5.8	4.3	3.8	4.1
5	9.0	12	17	9.6	5.8	8.0	6.5	8.5	5.6	4.2	3.8	4.2
6	9.0	12	15	9.6	5.8	23	7.5	8.0	5.4	4.2	3.8	3.9
7	9.0	12	14	8.5	5.8	16	7.5	8.0	5.4	4.2	3.8	5.1
8	9.0	12	13	7.0	6.0	49	8.5	8.0	5.2	4.2	3.8	17
9	9.0	12	12	6.5	14	27	12	8.0	5.2	4.2	3.8	9.5
10	10	12	12	5.7	12	15	15	8.0	5.2	4.1	3.8	8.5
11	10	11	12	6.1	10	13	13	8.0	5.2	4.1	3.8	8.2
12	9.0	11	11	7.0	8.5	12	11	8.0	5.2	4.1	3.8	7.8
13	9.0	11	11	7.0	7.5	11	10	8.0	5.0	4.1	3.8	7.6
14	9.0	11	11	7.0	6.8	14	10	8.0	5.0	4.0	3.8	7.6
15	10	11	10	7.0	6.8	11	10	8.0	5.0	4.0	3.8	7.4
16	9.6	11	10	6.5	6.5	10	9.6	7.5	4.8	4.0	3.8	7.4
17	9.6	11	10	6.5	6.5	9.5	9.0	7.5	4.8	4.0	3.8	7.2
18	10	11	10	7.0	6.5	9.0	9.0	7.5	4.6	4.0	3.9	7.2
19	10	11	9.8	6.1	6.5	9.0	9.0	7.5	4.6	4.0	4.0	7.0
20	10	11	9.6	6.1	6.5	9.0	9.0	7.5	4.6	4.0	4.0	7.0
21	10	10	9.4	6.5	6.5	9.0	9.0	7.5	4.6	3.9	4.1	6.8
22	16	10	9.2	6.5	6.5	9.0	9.0	7.5	4.6	3.9	4.1	6.6
23	15	10	9.0	6.5	6.5	9.0	8.5	7.5	4.6	3.9	4.1	6.6
24	13	10	9.0	6.5	6.5	9.0	8.5	7.5	4.6	3.9	4.1	6.4
25	12	10	9.0	6.5	6.5	12	8.5	7.0	4.5	3.9	3.8	6.4
26	11	10	9.0	6.5	6.5	10	8.5	7.0	4.5	3.8	3.8	6.2
27	10	10	9.0	6.5	7.0	9.6	8.5	6.5	4.5	3.8	3.8	6.2
28	26	10	9.6	7.0	7.0	9.0	8.5	6.5	4.4	3.8	3.8	6.2
29	15	10	7.5	9.0	---	9.0	8.5	6.5	4.4	3.8	4.1	6.0
30	14	10	12	7.0	---	9.0	8.5	6.5	4.4	3.8	4.1	6.0
31	13	---	8.0	6.0	---	9.6	---	6.2	---	3.8	4.1	---
TOTAL	342.2	331	372.1	220.7	202.0	379.2	275.6	236.2	149.9	125.1	120.4	202.4
MEAN	11.0	11.0	12.0	7.12	7.21	12.2	9.19	7.62	5.00	4.04	3.88	6.75
MAX	26	13	54	9.6	14	49	15	8.5	6.2	4.4	4.1	17
MIN	9.0	10	7.5	5.7	5.8	7.0	6.5	6.2	4.4	3.8	3.8	3.9
AC-FT	679	657	738	438	401	752	547	469	297	248	239	401
(a)	730	714	790	495	454	806	604	531	345	290	282	447
(b)	112	77	122	106	82	80	68	127	92	54	72	71

CAL YR 1974 TOTAL 4322.7 MEAN 11.8 MAX 54 MIN 6.1 AC-FT 8570 AC-FT a 9,260
WTR YR 1975 TOTAL 2956.8 MEAN 8.10 MAX 54 MIN 3.8 AC-FT 5860 AC-FT a 6,490

Peak discharge (base, 100 ft^3/s).--Dec. 4 (1100) 252 ft^3/s (10.75 ft); Mar. 8 (1600) 205 ft^3/s (10.71 ft).

a Combined discharge, in acre-feet, of river and infiltration line.
b Discharge, in acre-feet, diverted from basin 15 mi (24 km) upstream.

10256000 WHITEWATER RIVER NEAR WHITE WATER, CALIF.--Continued

PERIOD OF RECORD.--Chemical analyses: Water year 1967 to current year (partial-record station).

REMARKS.--Chemical-quality records furnished by California Department of Water Resources.

WATER QUALITY DATA, WATER YEAR OCTOBER 1974 TO SEPTEMBER 1975

DATE	TIME	INSTANTANEOUS DISCHARGE (CFS)	DISSOLVED IRON (FE) (UG/L)	DISSOLVED CALCIUM (CA) (MG/L)	DISSOLVED MAGNESIUM (MG) (MG/L)	DISSOLVED SODIUM (NA) (MG/L)	DISSOLVED POTASSIUM (K) (MG/L)	BICARBONATE (HCO3) (MG/L)	CARBONATE (CO3) (MG/L)	ALKALINITY AS CACO3 (MG/L)	DISSOLVED SULFATE (SO4) (MG/L)
DEC.											
16...	0900	10	--	54	10	13	3.9	198	0	162	39
MAR.											
24...	0800	9.0	--	46	11	11	3.5	179	0	147	34
MAY											
19...	0730	7.5	10	--	--	--	--	--	--	--	--
JUNE											
23...	0730	4.6	--	53	13	13	4.3	200	0	164	38
SEP.											
22...	0745	6.6	--	52	13	14	4.7	208	0	171	40

DATE	DISSOLVED CHLORIDE (CL) (MG/L)	DISSOLVED FLUORIDE (F) (MG/L)	TOTAL NITRATE (N) (MG/L)	DISSOLVED SOLIDS (RESIDUE AT 180 C) (MG/L)	DISSOLVED SOLIDS (TONS PER AC-FT)	HARDNESS (CA,MG) (MG/L)	NONCARBONATE HARDNESS (MG/L)	PERCENT SODIUM	SODIUM ADSORPTION RATIO	SPECIFIC CONDUCTANCE (MICROMHOS)	PH (UNITS)
DEC.											
16...	4.2	.8	.61	250	.34	177	15	14	.4	380	8.2
MAR.											
24...	3.9	.8	.63	188	.26	161	14	13	.4	300	8.2
MAY											
19...	--	--	--	--	--	--	--	--	--	--	--
JUNE											
23...	5.3	1.0	.81	252	.34	185	21	13	.4	330	7.7
SEP.											
22...	3.9	1.0	.41	247	.34	182	11	14	.4	425	7.7

DATE	TEMPERATURE (DEG C)	TURBIDITY (JTU)	DISSOLVED OXYGEN (MG/L)	DISSOLVED ARSENIC (AS) (UG/L)	DISSOLVED BORON (B) (UG/L)	DISSOLVED CADMIUM (CD) (UG/L)	DISSOLVED COPPER (CU) (UG/L)	DISSOLVED LEAD (PB) (UG/L)	TOTAL MERCURY (HG) (UG/L)	DISSOLVED ZINC (ZN) (UG/L)
DEC.										
16...	13.0	47	10.3	--	0	--	--	--	--	--
MAR.										
24...	10.0	55	10.6	--	0	--	--	--	--	--
MAY										
19...	15.5	--	--	0	--	0	10	0	.1	10
JUNE										
23...	18.5	--	8.0	--	0	--	--	--	--	--
SEP.										
22...	18.0	40	7.6	--	0	--	--	--	--	--

10256400 SAN GORGONIO RIVER NEAR WHITE WATER, CALIF.

LOCATION.--Lat 33°55'14", long 116°41'45", in NW¼SE¼SW¼ sec.8, T.3 S., R.3 E., Riverside County, on right bank 0.2 mi (0.3 km) south of Interstate Highway 10, and 3.4 mi (5.5 km) west of town of White Water.

DRAINAGE AREA.--154 mi^2 (399 km^2).

PERIOD OF RECORD.--February 1966 to current year.

GAGE.--Water-stage recorder. Altitude of gage is 1,320 ft (402 m), from topographic map. Prior to Mar. 19, 1968, flood-hydrograph recorder.

AVERAGE DISCHARGE.--9 years, 1.44 ft^3/s (0.0408 m^3/s), 1,040 acre-ft/yr (1.28 hm^3/yr).

EXTREMES.--Current year: Maximum discharge, 272 ft^3/s (7.70 m^3/s) Mar. 6 (gage height, 2.54 ft or 0.774 m), on basis of slope-conveyance measurement of maximum flow; no flow most of year.
Period of record: Maximum discharge, 7,250 ft^3/s (205 m^3/s) Jan. 25, 1969 (gage height, 6.0 ft or 1.83 m, from floodmarks), on basis of slope-area measurement of maximum flow; no flow most of each year.
Flood of Nov. 23, 1965, reached a stage of 6.10 ft (1.859 m), from floodmarks (discharge, 4,500 ft^3/s or 127 m^3/s, on basis of slope-area measurement).

REMARKS.--Records poor. No regulation or diversion above station.

DISCHARGE, IN CUBIC FEET PER SECOND, WATER YEAR OCTOBER 1974 TO SEPTEMBER 1975
MEAN VALUES

DAY	OCT	NOV	DEC	JAN	FEB	MAR	APR	MAY	JUN	JUL	AUG	SEP
1			0			0						0
2			0			0						0
3			0			0						0
4			.40			0						0
5			.02			0						0
6			0			5.7						.02
7			0			0						0
8			0			17						0
9			0			0						0
10			0			0						0
11			0			0						0
12			0			0						0
13			0			0						0
14			0			0						0
15			0			0						0
16			0			0						0
17			0			0						0
18			0			0						0
19			0			0						0
20			0			0						0
21			0			0						0
22			0			0						0
23			0			0						0
24			0			0						0
25			0			0						0
26			0			0						0
27			0			0						0
28			0			0						0
29			0		---	0						0
30			0		---	0						0
31		---	0		---	0	---		---			---
TOTAL	0	0	.42	0	0	22.7	0	0	0	0	0	.02
MEAN	0	0	.014	0	0	.73	0	0	0	0	0	.0007
MAX	0	0	.40	0	0	17	0	0	0	0	0	.02
MIN	0	0	0	0	0	0	0	0	0	0	0	0
AC-FT	0	0	.8	0	0	45	0	0	0	0	0	.04

CAL YR 1974 TOTAL 12.92 MEAN .035 MAX 9.8 MIN 0 AC-FT 26
WTR YR 1975 TOTAL 23.14 MEAN .063 MAX 17 MIN 0 AC-FT 46

Peak discharge (base, 50 ft^3/s).--Mar. 6 (1130) 272 ft^3/s (2.54 ft).

NOTE.--No gage-height record Oct. 1 to Dec. 4, May 28 to June 25, July 12 to Aug. 20.

10256500 SNOW CREEK NEAR WHITE WATER, CALIF.

LOCATION.--Lat 33°52'14", long 116°40'49", in SE¼NW¼NW¼ sec.33, T.3 S., R.3 E., Riverside County, on left bank 300 ft (91 m) upstream from Southern Pacific Railroad diversion dam, 300 ft (91 m) downstream from East Fork, 2.5 mi (4.0 km) upstream from mouth, and 4.4 mi (7.1 km) southwest of White Water.

DRAINAGE AREA.--10.8 mi^2 (28.0 km^2).

PERIOD OF RECORD.--July to December 1921, May 1922 to February 1927, December 1927 to September 1931, October 1959 to current year. Yearly discharge only for 1930, published in WSP 1314.

GAGE.--Water-stage recorder. Altitude of gage is 2,000 ft (610 m), from topographic map. Prior to September 1931, at various sites within 500 ft (152 m) of present site at different datums. September 1931 to Oct. 6, 1970, at site 250 ft (76 m) downstream at datum 15.9 ft (4.85 m) lower.

AVERAGE DISCHARGE.--23 years (1922-26, 1928-31, 1959-75), 8.12 ft^3/s (0.230 m^3/s), 5,880 acre-ft/yr (7.25 hm^3/yr).

EXTREMES.--Current year: Maximum discharge, 36 ft^3/s (1.02 m^3/s) Mar. 8 (gage height, 17.20 ft or 5.243 m); minimum daily, 2.6 ft^3/s (0.074 m^3/s) Sept. 26.
Period of record: Maximum discharge, 13,000 ft^3/s (368 m^3/s) Jan. 25, 1969 (gage height, 27.4 ft or 8.352 m, from floodmarks, present datum), from rating curve extended above 55 ft^3/s (1.56 m^3/s) on basis of slope-area measurement of maximum flow; minimum daily, 2.1 ft^3/s (0.059 m^3/s) June 23-27, Sept. 5-11, 1961.

REMARKS.--Records fair. No regulation or diversion above station. Palm Springs Water Co. diverts 50 ft (15 m) downstream, generally taking the entire base flow.

DISCHARGE, IN CUBIC FEET PER SECOND, WATER YEAR OCTOBER 1974 TO SEPTEMBER 1975
MEAN VALUES

DAY	OCT	NOV	DEC	JAN	FEB	MAR	APR	MAY	JUN	JUL	AUG	SEP
1	3.0	3.7	3.9	3.7	4.5	4.5	11	7.8	6.8	3.4	2.8	3.0
2	3.2	3.7	3.9	3.5	4.4	4.5	11	7.8	6.8	3.4	2.8	3.0
3	3.4	3.7	3.9	3.5	5.0	4.3	12	9.0	6.5	3.4	2.8	3.0
4	3.4	3.7	7.4	3.5	4.8	4.3	12	9.4	6.5	3.3	2.9	3.0
5	3.2	3.7	6.0	3.6	5.0	4.3	12	9.4	6.2	3.3	2.9	3.0
6	3.2	3.7	5.5	3.4	4.8	12	12	8.2	5.9	3.3	2.9	3.0
7	3.4	3.7	5.0	3.7	5.0	9.4	12	7.8	5.9	3.2	2.9	3.0
8	3.4	3.7	4.5	3.6	4.7	16	12	7.8	5.9	3.2	2.9	3.1
9	3.4	3.7	4.1	3.8	6.2	14	11	8.2	5.9	3.1	2.9	3.2
10	3.4	3.7	5.0	3.6	6.5	11	9.4	8.6	5.6	3.0	2.9	3.2
11	3.4	3.8	3.9	3.6	4.5	9.4	8.6	8.2	5.3	2.8	2.9	3.2
12	3.4	3.9	4.0	3.6	4.8	8.6	8.2	7.8	5.0	3.0	2.9	3.2
13	3.4	3.9	5.8	3.7	4.8	7.8	8.6	7.8	5.0	2.8	2.9	3.2
14	3.5	3.7	6.1	3.8	4.5	7.8	9.0	9.4	4.8	3.0	2.9	3.0
15	3.5	3.7	4.8	4.0	4.3	7.5	9.8	10	4.5	2.8	2.9	3.0
16	3.5	3.7	4.0	4.1	4.5	6.8	9.4	10	4.5	2.8	2.9	3.4
17	3.5	3.7	4.0	4.1	4.5	6.8	9.4	9.8	4.5	2.8	2.9	3.7
18	3.5	3.7	4.2	4.2	4.3	6.2	8.2	9.4	4.3	2.8	2.9	3.7
19	3.5	3.7	3.4	4.2	4.1	5.9	7.8	9.4	4.3	2.8	2.9	3.7
20	3.5	3.7	3.3	4.3	4.1	7.2	7.5	9.8	4.1	2.8	2.9	3.7
21	3.5	3.7	3.1	4.3	4.1	7.5	7.8	9.0	4.1	2.8	2.9	3.4
22	3.5	3.9	3.4	4.3	4.1	8.2	8.6	7.8	4.1	2.8	2.9	3.7
23	3.5	3.9	3.4	4.5	4.3	7.5	8.6	7.2	3.7	2.8	2.9	3.2
24	3.5	3.9	3.4	4.5	4.1	6.8	8.6	7.1	3.7	2.8	2.9	2.8
25	3.5	3.9	3.6	4.3	4.3	6.8	9.0	7.0	3.6	2.8	3.0	2.8
26	3.6	3.9	3.5	4.2	4.8	7.0	9.0	7.0	3.6	2.8	3.0	2.6
27	3.6	3.9	3.5	4.2	4.8	7.4	8.2	6.9	3.6	2.8	3.0	2.9
28	3.6	3.9	3.7	4.5	4.8	8.2	7.8	6.9	3.5	2.8	3.0	2.7
29	3.6	3.9	3.7	4.3	---	9.2	7.5	6.9	3.5	2.8	3.0	2.9
30	3.6	3.9	3.7	4.5	---	10	7.8	6.8	3.5	2.8	3.0	3.8
31	3.6	---	3.8	4.5	---	10	---	6.8	---	2.8	3.0	---
TOTAL	106.8	113.3	131.5	123.6	130.6	246.9	283.8	255.0	145.2	91.8	90.3	95.1
MEAN	3.45	3.78	4.24	3.99	4.66	7.96	9.46	8.23	4.84	2.96	2.91	3.17
MAX	3.6	3.9	7.4	4.5	6.5	16	12	10	6.8	3.4	3.0	3.8
MIN	3.0	3.7	3.1	3.4	4.1	4.3	7.5	6.8	3.5	2.8	2.8	2.6
AC-FT	212	225	261	245	259	490	563	506	288	182	179	189

CAL YR 1974 TOTAL 2025.3 MEAN 5.55 MAX 64 MIN 2.4 AC-FT 4020
WTR YR 1975 TOTAL 1813.9 MEAN 4.97 MAX 16 MIN 2.6 AC-FT 3600

Peak discharge (base, 50 ft^3/s).--No peak above base.

NOTE.--No gage-height record Oct. 1 to Dec. 9, Mar. 13 to Apr. 9, May 23 to Sept. 7.

10257600 MISSION CREEK NEAR DESERT HOT SPRINGS, CALIF.

LOCATION.--Lat 34°00'40", long 116°37'38", in NE¼SW¼ sec.12, T.2 S., R.3 E., Riverside County, in Mission Creek Indian Reservation, 0.6 mi (1.0 km) downstream from West Fork, and 6.8 mi (10.9 km) northwest of Desert Hot Springs.

DRAINAGE AREA.--35.7 mi^2 (92.5 km^2).

PERIOD OF RECORD.--October 1967 to current year.

GAGE.--Water-stage recorder with rain-gage attachment. Altitude of gage is 2,400 ft (732 m), from topographic map.

AVERAGE DISCHARGE.--8 years, 1.80 ft^3/s (0.0510 m^3/s), 1,300 acre-ft/yr (1.60 hm^3/yr).

EXTREMES.--Current year: Maximum discharge, 0.37 ft^3/s (0.011 m^3/s) Apr. 9 (gage height, 2.07 ft or 0.631 m); no flow for several months.
Period of record: Maximum discharge, 1,660 ft^3/s (47.0 m^3/s) Jan. 25, 1969 (gage height, 6.40 ft or 1.951 m) on basis of slope-area measurement of maximum flow; no flow for long periods in most years.

REMARKS.--Records poor. Slight regulation of low flow by two small dams with a combined capacity of about 3 acre-ft (3,700 m^3), 2 mi (3 km) above station.

DISCHARGE, IN CUBIC FEET PER SECOND, WATER YEAR OCTOBER 1974 TO SEPTEMBER 1975
MEAN VALUES

DAY	OCT	NOV	DEC	JAN	FEB	MAR	APR	MAY	JUN	JUL	AUG	SEP
1			0			0	0	0				
2			0			0	0	0				
3			0			0	0	0				
4			.01			0	0	0				
5			0			0	0	.05				
6			0			0	0	.03				
7			0			0	0	.01				
8			0			0	.05	0				
9			0			0	.18	0				
10			0			0	.07	0				
11			0			0	.06	0				
12			0			0	.05	0				
13			0			0	.03	0				
14			0			.03	.03	0				
15			0			0	.04	0				
16			0			0	.05	0				
17			0			0	.07	0				
18			0			0	.05	0				
19			0			0	.03	0				
20			0			0	.01	0				
21			0			0	0	0				
22			0			0	.04	0				
23			0			0	.01	0				
24			0			0	.01	0				
25			0			0	.01	0				
26			0			0	.03	0				
27			0			0	.07	0				
28			0			0	.02	0				
29			0		---	0	.01	0				
30			0		---	0	.01	0				
31		---	0		---	0	---	0	---			---
TOTAL	0	0	.01	0	0	.03	.93	.09	0	0	0	0
MEAN	0	0	.0003	0	0	.001	.031	.003	0	0	0	0
MAX	0	0	.01	0	0	.03	.18	.05	0	0	0	0
MIN	0	0	0	0	0	0	0	0	0	0	0	0
AC-FT	0	0	.02	0	0	.06	1.8	.2	0	0	0	0

CAL YR 1974 TOTAL 8.36 MEAN .023 MAX .63 MIN 0 AC-FT 17
WTR YR 1975 TOTAL 1.06 MEAN .0030 MAX .18 MIN 0 AC-FT 2.1

Peak discharge (base, 50 ft^3/s).--No peak above base.

a Precipitation, in inches.

10257710 CHINO CANYON CREEK NEAR PALM SPRINGS, CALIF.

LOCATION.--Lat 33°50'21", long 116°36'45", in SW¼SW¼NW¼ sec.7, T.4 S., R.4 E., Riverside County, on left bank 800 ft (244 m) downstream from tram building, 3.7 mi (6.0 km) west of Highway 111 on road leading to Palm Springs aerial tramway.

DRAINAGE AREA.--3.88 mi^2 (10.05 km^2).

PERIOD OF RECORD.--October 1974 to September 1975.

GAGE.--Water-stage recorder. Altitude of gage is 2,500 ft (762 m), from topographic map.

EXTREMES.--Current year: Maximum discharge, 0.10 ft^3/s (0.0028 m^3/s) Mar. 8 (gage height, 3.81 ft or 1.161 m); no flow most months.

REMARKS.--Records poor. Two diversions for the city of Palm Springs 0.5 mi (0.8 km) upstream.

DISCHARGE, IN CUBIC FEET PER SECOND, WATER YEAR OCTOBER 1974 TO SEPTEMBER 1975
MEAN VALUES

DAY	OCT	NOV	DEC	JAN	FEB	MAR	APR	MAY	JUN	JUL	AUG	SEP
1						0						
2						0						0
3						0						0
4						0						0
5						0						0
6						0						0
7						0						0
8						.01						0
9						0						.01
10						0						0
11						0						0
12						0						0
13						0						0
14						0						0
15						0						0
16						0						0
17						0						0
18						0						0
19						0						0
20						0						0
21						0						0
22						0						0
23						0						0
24						0						0
25						0						0
26						0						0
27						0						0
28						0						0
29					---	0						0
30					---	0						0
31		---			---	0	---		---			0
TOTAL	0	0	0	0	0	.01	0	0	0	0	0	---
MEAN	0	0	0	0	0	.0003	0	0	0	0	0	.01
MAX	0	0	0	0	0	.01	0	0	0	0	0	.0003
MIN	0	0	0	0	0	0	0	0	0	0	0	.01
AC-FT	0	0	0	0	0	.02	0	0	0	0	0	0
												.02

WTR YR 1975 TOTAL 0.02 MEAN .0001 MAX .01 MIN 0 AC-FT .04

NOTE.--No gage-height record Mar. 8-10, May 22 to July 10.

10258000 TAHQUITZ CREEK NEAR PALM SPRINGS, CALIF.

LOCATION.--Lat 33°48'18", long 116°33'30", in NE¼SW¼SW¼ sec.22, T.4 S., R.4 E., Riverside County, on left bank 2.2 mi (3.5 km) southwest of Palm Springs, and 7 mi (11 km) upstream from mouth.

DRAINAGE AREA.--16.8 mi^2 (43.5 km^2).

PERIOD OF RECORD.--October 1947 to current year.

GAGE.--Water-stage recorder. Datum of gage is 762.5 ft (232.41 m) above mean sea level (levels by Riverside County Flood Control District). Prior to Aug, 25, 1970, at datum 2.00 ft (0.610 m) higher.

AVERAGE DISCHARGE.--28 years, 3.72 ft^3/s (0.105 m^3/s), 2,700 acre-ft/yr (3.33 hm^3/yr).

EXTREMES.--Current year: Maximum discharge, 5.7 ft^3/s (0.16 m^3/s) Dec. 4 (gage height, 3.42 ft or 1.042 m, from floodmarks); maximum gage height, 4.26 ft (1.298 m) June 8, backwater; no flow Oct. 1 to Dec. 3, July 2 to Sept. 30.

Period of record: Maximum discharge, 2,900 ft^3/s (82.1 m^3/s) Nov. 22, 1965, Jan. 25, 1969 (gage height, 12.34 ft or 3.761 m, present datum), from rating curve extended above 80 ft^3/s (2.27 m^3/s) on basis of slope-area measurements at gage heights 8.45 ft (2.576 m) and 10.34 ft (3.152 m); no flow for parts of each year.

REMARKS.--Records poor. No regulation or diversion above station.

DISCHARGE, IN CUBIC FEET PER SECOND, WATER YEAR OCTOBER 1974 TO SEPTEMBER 1975
MEAN VALUES

DAY	OCT	NOV	DEC	JAN	FEB	MAR	APR	MAY	JUN	JUL	AUG	SEP
1			0	.41	.34	.23	.63	2.7	2.7	.02		
2			0	.38	.46	.23	.69	2.9	2.6	0		
3			0	.34	.60	.22	.69	3.1	2.4	0		
4			2.7	.36	.51	.22	.69	3.3	2.3	0		
5			1.2	.31	.46	.22	.66	3.5	2.1	0		
6			.80	.34	.43	.45	.81	3.8	2.0	0		
7			.60	.31	.38	.75	.84	4.1	1.8	0		
8			.50	.36	.38	.84	1.0	4.4	1.8	0		
9			.45	.36	.36	1.4	2.4	4.7	1.7	0		
10			.42	.38	.54	1.3	1.7	5.0	1.7	0		
11			.38	.38	.43	1.2	1.5	5.2	1.7	0		
12			.36	.38	.40	.99	1.4	5.3	1.6	0		
13			.34	.38	.38	.81	1.4	5.4	1.6	0		
14			.33	.36	.36	.78	1.4	5.5	1.4	0		
15			.32	.34	.34	.72	1.4	5.6	1.3	0		
16			.31	.34	.33	.69	1.5	5.5	1.2	0		
17			.30	.34	.31	.60	1.5	5.5	1.1	0		
18			.30	.34	.30	.48	1.5	5.4	1.0	0		
19			.30	.34	.29	.46	1.6	5.3	1.0	0		
20			.30	.34	.28	.38	1.6	5.2	.81	0		
21			.30	.34	.27	.38	1.7	5.0	.66	0		
22			.30	.34	.27	.41	1.7	4.4	.66	0		
23			.30	.34	.26	.69	1.8	3.9	.66	0		
24			.30	.34	.25	.81	1.8	3.8	.63	0		
25			.29	.31	.24	.78	1.9	3.8	.60	0		
26			.29	.34	.24	1.1	2.0	3.8	.56	0		
27			.29	.31	.23	1.1	2.1	3.7	.43	0		
28			.32	.34	.23	.97	2.2	3.6	.27	0		
29			.35	.34	---	.90	2.3	3.2	.16	0		
30			.41	.34	---	.78	2.4	3.0	.08	0		
31		---	.57	.34	---	.66	---	2.8	---	0		---
TOTAL	0	0	13.63	10.77	9.87	21.55	44.81	132.4	38.52	.02	0	0
MEAN	0	0	.44	.35	.35	.70	1.49	4.27	1.28	.0006	0	0
MAX	0	0	2.7	.41	.60	1.4	2.4	5.6	2.7	.02	0	0
MIN	0	0	0	.31	.23	.22	.63	2.7	.08	0	0	0
AC-FT	0	0	27	21	20	43	89	263	76	.04	0	0

CAL YR 1974 TOTAL 469.21 MEAN 1.29 MAX 10 MIN 0 AC-FT 931
WTR YR 1975 TOTAL 271.57 MEAN .74 MAX 5.6 MIN 0 AC-FT 539

Peak discharge (base, 50 ft^3/s).--No peak above base.

10258500 PALM CANYON CREEK NEAR PALM SPRINGS, CALIF.

LOCATION.--Lat 33°44'42", long 116°32'05", in NE¼SW¼SE¼ sec.11, T.5 S., R.4 E., Riverside County, on right bank 0.8 mi (1.3 km) upstream from Murray Canyon Creek, and 6 mi (10 km) south of Palm Springs.

DRAINAGE AREA.--93.3 mi^2 (241.6 km^2).

PERIOD OF RECORD.--January 1930 to January 1942, October 1947 to current year.

GAGE.--Water-stage recorder. Altitude of gage is 700 ft (213 m), from topographic map. Prior to Jan. 14, 1942, at datum 0.2 ft (0.06 m) higher.

AVERAGE DISCHARGE.--39 years (1930-41, 1947-75), 3.25 ft^3/s (0.0920 m^3/s), 2,360 acre-ft/yr (2.90 hm^3/yr).

EXTREMES.--Current year: Maximum discharge, 892 ft^3/s (25.3 m^3/s) Oct. 22 (gage height, 4.62 ft or 1.41 m); no flow for most months.

Period of record: Maximum discharge, 3,850 ft^3/s (109 m^3/s) Feb. 6, 1937 (gage height, 5.80 ft or 1.768 m, present datum), from rating curve extended above 120 ft^3/s (3.40 m^3/s) on basis of velocity-area measurement of maximum flow; no flow for several months in most years.

REMARKS.--Records fair. No regulation or diversion above station.

DISCHARGE, IN CUBIC FEET PER SECOND, WATER YEAR OCTOBER 1974 TO SEPTEMBER 1975
MEAN VALUES

DAY	OCT	NOV	DEC	JAN	FEB	MAR	APR	MAY	JUN	JUL	AUG	SEP
1	0						0					
2	0						0					
3	0						0					
4	0						0					
5	0						0					
6	0						0					
7	0						0					
8	0						.01					
9	0						1.4					
10	0						.80					
11	0						.68					
12	0						.57					
13	0						.57					
14	0						.57					
15	0						.57					
16	0						.48					
17	0						.68					
18	0						.40					
19	0						.27					
20	0						.17					
21	0						.10					
22	44						.07					
23	.56						.05					
24	.26						.04					
25	0						.03					
26	0						.04					
27	0						0					
28	0						0					
29	0				---		0					
30	0				---		0					
31	0	---			---		---		---			---
TOTAL	44.82	0	0	0	0	0	7.50	0	0	0	0	0
MEAN	1.45	0	0	0	0	0	.25	0	0	0	0	0
MAX	44	0	0	0	0	0	1.4	0	0	0	0	0
MIN	0	0	0	0	0	0	0	0	0	0	0	0
AC-FT	89	0	0	0	0	0	15	0	0	0	0	0

CAL YR 1974 TOTAL 70.02 MEAN .19 MAX 44 MIN 0 AC-FT 139
WTR YR 1975 TOTAL 52.32 MEAN .14 MAX 44 MIN 0 AC-FT 104

Peak discharge (base, 100 ft^3/s).--Oct. 22 (1600) 892 ft^3/s (4.62 ft).

10259000 ANDREAS CREEK NEAR PALM SPRINGS, CALIF.

LOCATION.--Lat 33°45'36", long 116°32'57", in NW¼SE¼SE¼ sec.3, T.5 S., R.4 E., Riverside County, on left bank at Bureau of Indian Affairs diversion dam, 1.1 mi (1.8 km) above mouth, and 5.1 mi (8.2 km) south of Palm Springs.

DRAINAGE AREA.--8.61 mi^2 (22.30 km^2).

PERIOD OF RECORD.--October 1948 to current year.

GAGE.--Water-stage recorder and concrete control. Altitude of gage is 800 ft (244 m), from topographic map. Prior to Mar. 25, 1949, reference point at same site at different datum.

AVERAGE DISCHARGE.--27 years, 2.10 ft^3/s (0.0595 m^3/s), 1,520 acre-ft/yr (1.87 hm^3/yr).

EXTREMES.--Current year: Maximum discharge, 16 ft^3/s (0.45 m^3/s) Mar. 8 (gage height, 1.64 ft or 0.503 m); minimum daily, 0.11 ft^3/s (0.003 m^3/s) Sept. 1.
Period of record: Maximum discharge, 1,960 ft^3/s (55.5 m^3/s) Aug. 31, 1954 (gage height, 7.11 ft or 2.167 m), from rating curve extended above 80 ft^3/s (2.27 m^3/s) on basis of slope-area measurement of maximum flow; no flow at times in some years.

REMARKS.--Records fair. No regulation above station. One small diversion for domestic use about 1 mi (2 km) above station.

DISCHARGE, IN CUBIC FEET PER SECOND, WATER YEAR OCTOBER 1974 TO SEPTEMBER 1975
MEAN VALUES

DAY	OCT	NOV	DEC	JAN	FEB	MAR	APR	MAY	JUN	JUL	AUG	SEP
1	.54	1.7	1.0	1.5	1.2	2.6	1.9	1.0	.63	.68	.37	.11
2	.54	1.5	1.3	1.6	1.0	1.5	1.8	1.0	1.0	.69	.31	.15
3	.55	1.5	1.3	1.5	.88	1.5	2.1	1.8	1.1	.75	.30	.17
4	.62	1.5	2.9	1.3	.56	1.5	2.6	2.1	1.1	.76	.26	.16
5	.64	1.5	1.8	1.2	.72	1.5	2.6	2.4	1.1	.71	.20	.19
6	.66	1.6	1.5	1.0	.78	2.6	2.5	2.8	1.1	.62	.26	.22
7	.90	1.9	1.4	1.6	.82	1.9	2.5	2.4	.96	.58	.24	.31
8	.94	1.8	1.3	2.7	1.2	4.5	2.8	2.4	.97	.74	.17	.69
9	.76	1.5	1.4	4.1	2.0	2.4	4.0	2.4	1.2	.84	.28	.70
10	.71	1.5	1.4	4.8	1.7	2.0	2.8	2.1	1.1	.71	.31	.57
11	.73	1.4	1.3	5.0	1.7	1.8	2.8	1.4	1.1	.64	.16	.46
12	.80	1.4	1.2	4.4	1.5	1.8	2.6	1.8	1.0	.53	.17	.43
13	.73	1.3	1.2	2.6	1.5	1.8	2.1	1.6	1.0	.60	.16	.40
14	.71	1.3	1.2	1.2	1.6	1.8	1.3	2.0	.95	.65	.17	.43
15	.69	1.3	1.2	1.2	1.7	1.8	1.3	1.7	.89	.55	.19	.48
16	.70	1.4	1.2	1.1	1.6	2.1	1.3	1.1	.87	.50	.20	.86
17	.69	1.5	1.3	1.2	1.6	2.5	1.3	1.6	.93	.59	.20	.89
18	.67	1.5	1.4	1.2	1.5	2.4	1.3	1.8	.92	.70	.22	.80
19	.65	1.5	1.2	.90	1.5	2.4	1.3	2.0	1.1	.46	.21	.72
20	.71	1.5	1.2	.35	1.7	2.4	1.3	2.0	1.2	.36	.31	.57
21	.78	1.5	1.2	.35	1.8	2.5	1.3	2.2	1.1	.41	.36	.57
22	1.0	1.5	1.3	.48	1.9	2.7	1.8	1.8	.99	.43	.25	.55
23	1.1	1.3	1.1	.48	2.0	2.7	1.5	1.6	.96	.47	.18	.56
24	.99	1.3	.71	.48	2.0	2.4	1.5	1.4	.89	.46	.20	.60
25	1.0	1.4	.64	.46	2.1	2.5	1.5	1.2	.89	.35	.18	.61
26	1.0	1.4	.63	.62	2.4	2.8	1.5	.75	.84	.36	.15	.53
27	1.0	1.3	.60	.89	2.7	2.8	1.5	.38	.77	.55	.15	.58
28	2.7	1.4	.64	.77	3.3	2.9	1.5	.46	.73	.64	.17	.58
29	2.3	1.3	1.1	.75	---	2.5	1.5	.41	.69	.67	.20	.58
30	1.9	.95	1.2	.82	---	2.2	1.5	.35	.69	.55	.17	.58
31	1.8	---	1.5	1.0	---	2.1	---	.35	---	.45	.15	---
TOTAL	29.49	43.55	38.32	47.55	44.96	70.9	57.3	48.30	28.77	18.00	6.85	15.05
MEAN	.95	1.45	1.24	1.53	1.61	2.29	1.91	1.56	.96	.58	.22	.50
MAX	2.7	1.9	2.9	5.0	3.3	4.5	4.0	2.8	1.2	.84	.37	.89
MIN	.53	.95	.60	.35	.56	1.5	1.3	.35	.63	.35	.15	.11
AC-FT	58	86	76	94	89	141	114	96	57	36	14	30

CAL YR 1974 TOTAL 703.71 MEAN 1.93 MAX 25 MIN .16 AC-FT 1400
WTR YR 1975 TOTAL 449.04 MEAN 1.23 MAX 5.0 MIN .11 AC-FT 891

Peak discharge (base, 30 ft^3/s).--No peak above base.

10259200 DEEP CREEK NEAR PALM DESERT, CALIF.

LOCATION.--Lat 33°37'52", long 116°23'29", in SE¼NE¼SE¼ sec.19, T.6 S., R.6 E., Riverside County, on left bank 500 ft (152 m) downstream from unnamed tributary, and 6.3 mi (10.1 km) south of Palm Desert.

DRAINAGE AREA.--30.6 mi^2 (79.3 km^2).

PERIOD OF RECORD.--May 1962 to current year.

GAGE.--Water-stage recorder. Altitude of gage is 1,440 ft (439 m), from topographic map.

AVERAGE DISCHARGE.--13 years, 0.49 ft^3/s (0.014 m^3/s), 355 acre-ft/yr (438,000 m^3/yr).

EXTREMES.--Current year: Maximum discharge, 400 ft^3/s (11.3 m^3/s) Oct. 22 (gage height, 4.14 ft or 1.262 m), from rating curve extended above 3.3 ft^3/s (0.09 m^3/s) on basis of slope-area measurements at gage heights 2.68 ft (0.817 m) and 5.15 ft (1.570 m); no flow part of year.
Period of record: Maximum discharge, 1,300 ft^3/s (36.8 m^3/s) Nov. 23, 1965 (gage height, 5.15 ft or 1.570 m in gage well, 6.15 ft or 1.875 m, from profile of floodmarks), from rating curve extended above 3.3 ft^3/s (0.093 m^3/s) on basis of slope-area measurements at gage heights 2.68 ft (0.817 m) and 5.15 ft (1.570 m); no flow for much of each year.

REMARKS.--Records fair. No regulation or diversion above station.

DISCHARGE, IN CUBIC FEET PER SECOND, WATER YEAR OCTOBER 1974 TO SEPTEMBER 1975
MEAN VALUES

DAY	OCT	NOV	DEC	JAN	FEB	MAR	APR	MAY	JUN	JUL	AUG	SEP
1	0		0	.04	.04	.07	.09	.09	.04		0	0
2	0		0	.03	.04	.09	.09	.09	.04		0	0
3	0		0	.03	.05	.09	.09	.09	.04		0	0
4	0		6.4	.03	.05	.09	.09	.09	.04		0	0
5	0		.10	.03	.05	.09	.09	.09	.03		0	0
6	0		.07	.03	.06	.10	.09	.08	.03		0	0
7	0		.04	.03	.07	.10	.09	.08	.03		.06	0
8	0		.01	.03	.07	.10	.09	.08	.03		0	0
9	0		0	.03	.07	.09	.83	.08	.03		0	0
10	0		0	.03	.07	.09	.36	.08	.03		0	0
11	0		0	.03	.07	.09	.24	.07	.03		0	0
12	0		0	.03	.07	.09	.21	.07	.03		0	0
13	0		0	.03	.07	.10	.21	.07	.02		0	0
14	0		0	.03	.07	.12	.40	.07	.02		0	0
15	0		0	.03	.07	.10	.45	.07	.02		0	0
16	0		0	.03	.07	.12	.25	.06	.02		0	11
17	0		0	.03	.06	.10	.15	.06	.02		0	1.4
18	0		0	.03	.06	.10	.13	.06	.02		0	.05
19	0		0	.03	.06	.10	.12	.06	.02		0	0
20	0		0	.03	.06	.10	.12	.06	.02		0	0
21	0		.01	.03	.05	.10	.11	.05	.01		0	0
22	17		.01	.03	.05	.10	.11	.05	.01		0	0
23	.30		.01	.04	.05	.09	.11	.05	.01		0	0
24	.20		.01	.04	.05	.09	.11	.05	.01		0	0
25	.10		.01	.04	.05	.10	.11	.05	.01		0	0
26	.09		.01	.04	.05	.09	.10	.05	.01		0	0
27	.04		.02	.04	.06	.09	.10	.05	.01		0	0
28	.03		.02	.04	.06	.09	.10	.04	.01		0	0
29	.02		.02	.04	---	.09	.10	.04	.01		0	0
30	.01		.02	.04	---	.09	.10	.04	0		0	0
31	0	---	.05	.04	---	.09	---	.04	---		0	---
TOTAL	17.79	0	6.81	1.03	1.65	2.95	5.24	2.01	.65	0	.06	12.45
MEAN	.57	0	.22	.033	.059	.095	.17	.065	.022	0	.002	.42
MAX	17	0	6.4	.04	.07	.12	.83	.09	.04	0	.06	11
MIN	0	0	0	.03	.04	.07	.09	.04	0	0	0	0
AC-FT	35	0	14	2.0	3.3	5.9	10	4.0	1.3	0	.1	25

CAL YR 1974 TOTAL 37.55 MEAN .10 MAX 17 MIN 0 AC-FT 74
WTR YR 1975 TOTAL 50.64 MEAN .14 MAX 17 MIN 0 AC-FT 100

Peak discharge (base, 20 ft^3/s)

Date	Time	G.H.	Discharge	Date	Time	G.H.	Discharge
10-22	1930	4.14	400	9-16	1830	3.33	140
12-4	1500	2.70	47				

NOTE.--No gage-height record Oct. 23 to Nov. 20, Apr. 15 to Aug. 6.

10259300 WHITEWATER RIVER AT INDIO, CALIF.

LOCATION.--Lat 33°44'06", long 116°14'39", in NW¼NE¼SW¼ sec.15, T.5 S., R.7 E., Riverside County, at center bridge pier on Interstate Highway 10, 2 mi (3 km) northwest of Indio.

DRAINAGE AREA.--1,073 mi^2 (2,779 km^2).

PERIOD OF RECORD.--March 1966 to current year.

GAGE.--Water-stage recorder and crest-stage gage. Altitude of gage is 5 ft (2 m), from topographic map.

AVERAGE DISCHARGE.--9 years, 2.58 ft^3/s (0.0731 m^3/s), 1,870 acre-ft/yr (2.31 hm^3/yr).

EXTREMES.--Current year: Maximum discharge, 21 ft^3/s (0.59 m^3/s) Dec. 29 (gage height, 6.97 ft or 2.124 m); no flow most of year.

Period of record: Maximum discharge, 11,400 ft^3/s (323 m^3/s) Jan. 25, 1969 (gage height, 14.41 ft or 4.392 m), from rating curve extended above 1,300 ft^3/s (36.8 m^3/s) on basis of slope-area measurement at gage height 15.3 ft (4.663 m); no flow all or most of each year.

Flood of Mar. 2 or 3, 1938, 29,000 ft^3/s (821 m^3/s), result of slope-area measurement at site 4.5 mi (7.2 km) upstream.

Flood of Nov. 22, 1965, reached a stage of 15.3 ft (4.663 m), from floodmarks (discharge, 14,100 ft^3/s or 399 m^3/s, on basis of slope-area measurement of peak flow).

REMARKS.--Records poor. No regulation above station. Water diverted from tributary streams for municipal supply in vicinity of Palm Springs. At times water is released to river at Coachella Canal crossing, 0.8 mi (1.3 km) upstream.

DISCHARGE, IN CUBIC FEET PER SECOND, WATER YEAR OCTOBER 1974 TO SEPTEMBER 1975
MEAN VALUES

DAY	OCT	NOV	DEC	JAN	FEB	MAR	APR	MAY	JUN	JUL	AUG	SEP
1	0	0	0				0					
2	0	0	0				0					
3	0	0	0				0					
4	0	0	0				0					
5	0	0	0				0					
6	.35	0	0				0					
7	0	0	0				0					
8	0	0	0				0					
9	0	0	0				0					
10	0	.32	0				0					
11	0	.86	0				0					
12	0	0	0				0					
13	0	0	0				.41					
14	0	0	0				2.5					
15	0	0	0				.48					
16	0	.37	0				.85					
17	0	0	0				0					
18	0	0	0				0					
19	0	0	0				0					
20	0	0	0				0					
21	0	0	0				0					
22	0	0	0				0					
23	0	0	0				0					
24	0	0	0				0					
25	0	0	0				0					
26	0	0	0				0					
27	0	0	0				0					
28	0	0	1.4				0					
29	0	0	2.6		---		0					
30	0	0	.55		---		0					
31	0	---	.10		---		---		---			---
TOTAL	.35	1.55	4.65	0	0	0	4.24	0	0	0	0	0
MEAN	.011	.052	.15	0	0	0	.14	0	0	0	0	0
MAX	.35	.86	2.6	0	0	0	2.5	0	0	0	0	0
MIN	0	0	0	0	0	0	0	0	0	0	0	0
AC-FT	.7	3.1	9.2	0	0	0	8.4	0	0	0	0	0

CAL YR 1974 TOTAL 6.55 MEAN .018 MAX 2.6 MIN 0 AC-FT 13
WTR YR 1975 TOTAL 10.79 MEAN .030 MAX 2.6 MIN 0 AC-FT 21

10259540 WHITEWATER RIVER NEAR MECCA, CALIF.

LOCATION.--Lat 33°31'29", long 116°04'36", in NW¼NW¼NW¼ sec.32, T.7 S., R.9 E., Riverside County, on left bank 1.6 mi (2.6 km) upstream from mouth, and 3.3 mi (5.3 km) south of Mecca.

DRAINAGE AREA.--1,494 mi^2 (3,870 km^2).

PERIOD OF RECORD.--October 1960 to current year.

GAGE.--Water-stage recorder. Datum of gage is 221.00 ft (67.36 m) below mean sea level (levels by Coachella County Water District). Oct. 1, 1960, to Mar. 22, 1967, at site 1.3 mi (2.1 km) downstream and Mar. 23, 1967, to July 22, 1970, at site 0.7 mi (1.1 km) downstream at different datums.

EXTREMES.--Period of record: Maximum daily discharge, 2,500 ft^3/s (70.8 m^3/s), estimated, Jan. 25, 1969; minimum daily, 37 ft^3/s (1.05 m^3/s) Nov. 25-29, 1960.

REMARKS.--Records good. Most of the flow represents seepage and return flow from irrigated areas.

COOPERATION.--Fifty-one discharge measurements furnished by Coachella Valley County Water District.

DISCHARGE, IN CUBIC FEET PER SECOND, WATER YEAR OCTOBER 1974 TO SEPTEMBER 1975
MEAN VALUES

DAY	OCT	NOV	DEC	JAN	FEB	MAR	APR	MAY	JUN	JUL	AUG	SEP
1	134	116	103	106	129	132	133	123	140	136	132	140
2	136	115	101	102	129	126	130	125	140	135	135	142
3	129	116	101	108	129	129	129	132	139	136	143	143
4	130	121	101	111	125	129	128	137	141	129	143	147
5	129	124	93	109	126	130	131	140	142	132	139	150
6	133	112	78	109	125	133	133	137	145	129	138	151
7	124	113	62	107	125	129	130	142	146	125	139	160
8	118	122	49	109	126	130	131	145	145	128	141	164
9	124	128	51	108	127	124	145	149	148	126	144	180
10	124	124	54	109	128	124	137	147	147	133	146	154
11	122	123	52	107	128	127	134	145	149	131	137	152
12	118	124	52	103	127	128	132	140	149	133	134	149
13	120	124	61	106	126	129	129	141	151	134	137	148
14	115	123	64	110	125	131	133	139	151	134	138	154
15	121	124	63	110	124	130	130	147	151	133	138	152
16	119	117	62	113	124	127	140	140	153	133	145	151
17	104	112	91	115	124	127	133	141	152	133	145	145
18	103	109	114	118	124	129	133	141	152	138	146	145
19	101	113	113	114	130	131	136	135	150	140	141	145
20	105	117	111	117	134	128	134	135	146	140	139	146
21	101	114	109	120	129	136	135	137	141	139	144	149
22	105	109	108	118	118	128	141	138	140	139	148	146
23	155	115	106	121	120	125	140	138	140	135	149	148
24	109	104	106	124	121	129	138	138	139	139	148	144
25	117	109	109	124	121	137	131	136	141	145	150	145
26	119	105	109	124	122	142	125	133	142	138	148	146
27	108	105	108	128	123	141	121	139	143	138	137	146
28	105	105	113	128	126	142	119	140	143	128	140	149
29	107	105	107	128	---	137	119	140	140	128	140	143
30	105	105	111	133	---	140	121	140	142	130	140	139
31	106	---	111	131	---	141	---	140	---	133	140	---
TOTAL	3646	3453	2773	3570	3515	4071	3951	4300	4348	4150	4384	4473
MEAN	118	115	89.5	115	126	131	132	139	145	134	141	149
MAX	155	128	114	133	134	142	145	149	153	145	150	180
MIN	101	104	49	102	118	124	119	123	139	125	132	139
AC-FT	7230	6850	5500	7080	6970	8070	7840	8530	8620	8230	8700	8870

CAL YR 1974 TOTAL 46073 MEAN 126 MAX 199 MIN 49 AC-FT 91390
WTR YR 1975 TOTAL 46634 MEAN 128 MAX 180 MIN 49 AC-FT 92500

10259920 WASTEWAY NO. 1 NEAR MECCA, CALIF.

LOCATION.--Lat 33°31'40", long 115°58'23", in NW¼SW¼SW¼ sec.29, T.7 S., R.10 E., Riverside County, on right bank of channel, 1,000 ft (300 m) upstream from mouth, 2,250 ft (686 m) downstream from State Highway 111, and 6.6 mi (10.6 km) southeast of Mecca.

PERIOD OF RECORD.--February 1966 to current year.

GAGE.--Water-stage recorder. Altitude of gage is 220 ft (67.1 m) below mean sea level (from topographic map).

EXTREMES.--Period of record: Maximum daily discharge, 348 ft^3/s (9.9 m^3/s) Mar. 7, 1971; minimum daily, 1.4 ft^3/s (0.04 m^3/s) May 20, 1975.

REMARKS.--Records poor. Discharge represents seepage and return flows from irrigated areas. At times water is wasted from Coachella Canal.

DISCHARGE, IN CUBIC FEET PER SECOND, WATER YEAR OCTOBER 1974 TO SEPTEMBER 1975
MEAN VALUES

DAY	OCT	NOV	DEC	JAN	FEB	MAR	APR	MAY	JUN	JUL	AUG	SEP
1	5.5	2.7	3.0	56	5.2	6.3	20	4.1	6.3	5.0	5.2	5.2
2	5.5	2.7	3.0	41	37	5.9	19	3.8	5.9	5.2	5.2	5.2
3	5.2	3.0	3.0	8.7	23	5.2	20	4.8	5.2	5.2	5.2	5.2
4	5.5	3.2	3.5	48	44	4.8	20	5.9	4.2	5.2	5.2	5.2
5	5.5	3.2	3.5	51	70	4.8	19	4.8	3.0	5.2	5.2	5.2
6	42	3.2	3.5	3.5	51	5.2	19	4.4	2.7	187	5.5	5.2
7	34	3.2	37	3.5	3.8	6.3	17	4.4	3.5	40	5.9	5.2
8	3.8	3.8	91	3.5	3.8	8.2	13	4.4	110	3.0	5.9	40
9	3.8	4.1	13	3.5	3.8	9.2	10	5.5	44	3.0	5.9	4.4
10	3.8	4.1	3.5	3.5	3.5	9.2	161	5.5	10	3.2	5.5	43
11	4.4	4.1	3.2	3.2	3.5	9.6	285	4.4	7.5	3.5	5.5	42
12	5.2	3.8	3.2	3.2	3.5	77	87	4.4	2.0	3.2	5.2	4.5
13	4.1	3.5	3.2	3.2	3.2	146	166	4.4	2.2	3.2	5.2	4.4
14	4.1	3.0	3.2	3.2	3.2	216	98	4.8	2.4	3.2	5.2	4.1
15	4.1	3.0	3.2	3.2	3.2	100	104	4.4	2.4	3.2	5.9	4.1
16	4.1	2.7	3.2	3.2	3.2	199	58	4.8	2.7	3.0	5.9	4.4
17	4.4	2.7	3.5	3.2	3.2	28	2.2	4.4	3.2	3.2	49	4.4
18	4.8	2.7	3.5	3.5	3.2	39	2.2	59	4.1	3.5	7.9	4.4
19	5.2	2.7	3.5	3.5	3.2	11	2.2	74	3.5	3.5	3.5	4.1
20	5.9	2.7	4.1	3.0	3.5	16	2.2	1.4	3.2	3.6	3.2	3.8
21	5.5	2.7	4.4	3.0	3.2	22	2.4	1.8	3.0	4.4	3.5	3.5
22	5.5	2.7	4.8	3.0	3.2	26	2.4	2.0	56	4.4	3.8	3.8
23	4.4	2.7	4.1	3.2	3.5	26	2.7	2.0	55	4.8	4.1	4.8
24	4.1	2.7	3.8	3.2	58	27	3.2	2.4	2.4	4.4	4.4	5.9
25	4.1	2.7	4.4	3.5	43	29	4.1	3.0	2.7	4.4	5.9	5.9
26	44	2.7	45	3.5	7.2	27	4.1	26	3.0	4.1	5.2	4.8
27	43	2.7	45	4.1	6.3	26	3.8	17	3.5	4.1	4.1	4.8
28	29	2.7	4.4	4.4	6.3	24	4.1	2.0	3.8	4.4	4.4	4.8
29	3.0	2.7	11	4.8	---	20	4.4	3.2	79	4.8	4.4	4.4
30	2.7	2.4	40	4.8	---	20	4.1	4.8	56	5.2	5.9	4.4
31	2.7	---	79	4.8	---	22	---	5.9	---	5.2	5.9	---
TOTAL	308.9	90.8	443.7	296.9	408.7	1175.7	1160.1	283.7	492.4	345.5	202.8	251.1
MEAN	9.96	3.03	14.3	9.58	14.6	37.9	38.7	9.15	16.4	11.1	6.54	8.37
MAX	44	4.1	91	56	70	216	285	74	110	187	49	43
MIN	2.7	2.4	3.0	3.0	3.2	4.8	2.2	1.4	2.0	3.0	3.2	3.5
AC-FT	613	180	880	589	811	2330	2300	563	977	685	402	498

CAL YR 1974 TOTAL 4507.3 MEAN 12.3 MAX 188 MIN 2.0 AC-FT 8940
WTR YR 1975 TOTAL 5460.3 MEAN 15.0 MAX 285 MIN 1.4 AC-FT 10830

10260500 DEEP CREEK NEAR HESPERIA, CALIF.

LOCATION.--Lat 34°20'28", long 117°13'39", in NW¼NE¼SE¼ sec.18, T.3 N., R.3 W., San Bernardino County, on right bank 0.5 mi (0.8 km) upstream from confluence with West Fork Mojave River, and 7 mi (11 km) southeast of Hesperia.

DRAINAGE AREA.--136 mi^2 (352 km^2).

PERIOD OF RECORD.--October 1904 to September 1922, October 1929 to current year. Monthly discharge only prior to January 1930, published in WSP 1314.

GAGE.--Water-stage recorder. Broad-crested weir since December 1938. Altitude of gage is 3,050 ft (930 m), from topographic map. See WSP 1314 for history of change prior to Dec. 10, 1938.

AVERAGE DISCHARGE.--64 years, 66.3 ft^3/s (1.878 m^3/s), 48,030 acre-ft/yr (59.6 hm^3/yr).

EXTREMES.--Current year: Maximum discharge, 503 ft^3/s (14.2 m^3/s) Mar. 8 (gage height, 2.98 ft or 0.908 m); minimum daily, 0.40 ft^3/s (0.011 m^3/s) Aug. 12.
Period of record: Maximum discharge, 46,600 ft^3/s (1,320 m^3/s) Mar. 2, 1938, based on slope-area measurement of maximum flow; no flow July 17, 18, 1961.

REMARKS.--Records fair. Slight regulation by Lake Arrowhead, capacity, 48,000 acre-ft (59.2 hm^3), used principally for recreation.

DISCHARGE, IN CUBIC FEET PER SECOND, WATER YEAR OCTOBER 1974 TO SEPTEMBER 1975
MEAN VALUES

DAY	OCT	NOV	DEC	JAN	FEB	MAR	APR	MAY	JUN	JUL	AUG	SEP
1	1.5	5.8	5.3	8.5	9.6	15	40	63	11	3.6	.84	.53
2	1.5	7.7	5.3	9.0	10	15	37	63	11	3.4	.80	.46
3	1.5	9.4	5.3	9.8	12	15	35	63	10	3.2	.76	.53
4	1.6	7.3	59	10	13	14	35	61	9.6	3.0	.72	.59
5	1.7	6.3	114	10	15	14	35	54	9.1	2.8	.68	.59
6	1.7	5.9	34	10	16	58	41	45	8.8	2.6	.66	.59
7	1.7	5.4	21	10	15	64	38	42	8.4	2.6	.59	.59
8	1.9	5.2	16	9.5	14	207	34	40	8.0	2.6	.53	.59
9	2.0	5.2	14	10	15	163	38	38	7.6	2.5	.53	.53
10	2.0	5.2	12	10	110	81	41	38	7.4	2.7	.53	.63
11	2.1	5.0	11	9.5	52	61	38	38	7.0	2.5	.46	.72
12	2.1	5.0	9.7	8.9	33	48	40	36	6.7	2.3	.40	.66
13	2.1	5.0	9.4	8.3	26	45	50	35	6.4	2.2	.46	.53
14	2.0	4.9	9.0	8.3	24	46	59	33	6.2	1.8	.46	.46
15	1.9	4.8	8.3	8.4	23	40	66	30	5.8	1.5	.46	.46
16	1.9	4.8	7.9	8.6	22	41	59	28	5.4	1.4	.46	.44
17	1.9	4.9	7.6	8.7	21	37	52	25	5.0	1.5	.53	.85
18	2.0	4.8	7.4	8.6	18	34	46	24	4.9	1.5	.59	1.1
19	2.0	4.8	7.1	8.6	18	45	50	23	5.2	1.6	.66	1.1
20	2.0	4.9	7.1	8.6	18	63	56	20	6.1	1.5	.91	.72
21	2.0	4.8	7.0	8.4	17	70	70	19	6.2	1.4	.98	.52
22	2.1	4.9	6.8	7.9	14	70	78	18	6.1	1.4	.98	.52
23	2.2	5.1	6.7	7.6	14	63	76	17	5.5	1.3	.98	.53
24	2.4	5.1	6.6	7.5	13	54	78	16	5.4	1.2	.98	.54
25	2.5	5.0	6.6	7.5	13	72	81	15	5.0	1.2	.91	.56
26	2.8	5.0	6.7	7.3	14	78	72	15	5.2	1.1	.98	.60
27	3.1	5.0	6.8	7.7	14	46	61	14	4.3	1.1	1.0	.62
28	3.6	5.0	7.0	8.3	15	45	55	13	4.1	1.0	.98	.68
29	11	5.0	7.2	8.9	---	38	61	13	3.9	.95	.85	.74
30	10	5.1	7.7	9.3	---	35	63	12	3.8	.90	.85	.78
31	7.0	---	8.0	9.4	---	37	---	12	---	.88	.78	---
TOTAL	85.8	162.3	447.5	273.1	598.6	1714	1585	963	199.1	59.23	22.30	18.76
MEAN	2.77	5.41	14.4	8.81	21.4	55.3	52.8	31.1	6.64	1.91	.72	.63
MAX	11	9.4	114	10	110	207	81	63	11	3.6	1.0	1.1
MIN	1.5	4.8	5.3	7.3	9.6	14	34	12	3.8	.88	.40	.44
AC-FT	170	322	888	542	1190	3400	3140	1910	395	117	44	37

CAL YR 1974 TOTAL 9314.80 MEAN 25.5 MAX 391 MIN 1.0 AC-FT 18480
WTR YR 1975 TOTAL 6128.69 MEAN 16.8 MAX 207 MIN .40 AC-FT 12160

Peak discharge (base, 400 ft^3/s).--Mar. 8 (1730) 503 ft^3/s (2.98 ft).

10261000 WEST FORK MOJAVE RIVER NEAR HESPERIA, CALIF.

LOCATION.--Lat 34°20'20", long 117°15'25", in NW¼NW¼ sec.24, T.3 N., R.4 W., San Bernardino County, on left bank on upstream wingwall of concrete double box culvert on Arrowhead Lake Road, 0.1 mi (0.2 km) northeast of junction with Highway 174, and 6.5 mi (10.5 km) southeast of Hesperia.

DRAINAGE AREA.--70.3 mi^2 (182 km^2).

PERIOD OF RECORD.--October 1904 to September 1922, October 1929 to September 1971, October 1974 to current year.

GAGE.--Water-stage recorder. Altitude of gage is 3,040 ft (927 m), from topographic map. June 30, 1922, to September 1971, water-stage recorder 1.5 mi (2.4 km) downstream. Prior to June 30, 1922, nonrecording gage and water-stage recorder 200 ft (61 m) downstream at different datum. June 30, 1942, to Apr. 14, 1966, at datum 2.00 ft (0.610 m) higher.

AVERAGE DISCHARGE.--60 years (1904-22, 1929-71, 1974-75), 39.4 ft^3/s (102.0 m^3/s), 28,550 acre-ft/yr (35.2 hm^3/yr).

EXTREMES.--Current year: Maximum discharge, 324 ft^3/s (9.18 m^3/s) Mar. 8 (gage height, 2.48 ft or 0.756 m); no flow most of year.
Period of record: Maximum discharge, 26,100 ft^3/s (739 m^3/s) Mar. 2, 1938, by slope-area measurement of maximum flow; no flow for several months in each year.

REMARKS.--Records fair. Regulated upstream at Cedar Springs Dam since 1972.

DISCHARGE, IN CUBIC FEET PER SECOND, WATER YEAR OCTOBER 1974 TO SEPTEMBER 1975
MEAN VALUES

DAY	OCT	NOV	DEC	JAN	FEB	MAR	APR	MAY	JUN	JUL	AUG	SEP
1			0		0	0	28	7.5				
2			0		0	0	28	7.5				
3			0		0	0	19	6.7				
4			21		.04	0	16	6.3				
5			21		6.1	0	21	4.0				
6			.03		7.9	123	35	2.2				
7			0		9.5	97	30	2.2				
8			0		7.1	170	22	2.1				
9			0		19	133	33	1.8				
10			0		79	84	25	2.1				
11			0		38	78	19	2.1				
12			0		7.1	69	16	2.6				
13			0		6.3	33	16	2.2				
14			0		6.7	60	23	6.2				
15			0		9.5	60	18	21				
16			0		14	45	14	7.9				
17			0		9.5	54	16	3.8				
18			0		1.2	32	13	2.1				
19			0		.20	35	10	.14				
20			0		.08	35	9.5	0				
21			0		.02	34	9.1	.73				
22			0		.02	46	8.7	.79				
23			0		0	44	8.7	.02				
24			0		0	35	8.3	0				
25			0		0	39	8.7	0				
26			0		.10	42	8.7	0				
27			0		0	35	8.3	0				
28			0		0	33	8.3	0				
29			0		---	32	7.9	0				
30			0		---	31	7.5	0				
31		---	0		---	31	---	0	---			---
TOTAL	0	0	42.03	0	221.36	1510	495.7	91.98	0	0	0	0
MEAN	0	0	1.36	0	7.91	48.7	16.5	2.97	0	0	0	0
MAX	0	0	21	0	79	170	35	21	0	0	0	0
MIN	0	0	0	0	0	0	7.5	0	0	0	0	0
AC-FT	0	0	83	0	439	3000	983	182	0	0	0	0

WTR YR 1975 TOTAL 2361.07 MEAN 6.47 MAX 170 MIN 0 AC-FT 4680

10261500 MOJAVE RIVER AT LOWER NARROWS, NEAR VICTORVILLE, CALIF.
(National stream-quality accounting network station)

LOCATION.--Lat 34°34'23", long 117°19'11", in SW¼SW¼SE¼ sec.29, T.6 N., R.4 W., San Bernardino County, on left bank 650 ft (198 m) upstream from bridge on county road, formerly U.S. Highway 66, 0.6 mi (1.0 km) downstream from Atchison, Topeka, and Santa Fe Railway bridge, and 3 mi (5 km) northwest of Victorville.

DRAINAGE AREA.--514 mi^2 (1,331 km^2).

PERIOD OF RECORD.--February 1899 to September 1906, October 1930 to current year. Monthly discharge only for January to September 1906, October, November 1930, published in WSP 1314. Prior to October 1936, published as "at Victorville" and as "near Victorville" in 1937.

GAGE.--Water-stage recorder. Datum of gage is 2,643.01 ft (805.59 m) above mean sea level. See WSP 1314 for history of gage changes prior to Mar. 28, 1938. Mar. 28, 1938, to Apr. 14, 1966, at site 350 ft (107 m) upstream at datum 5.00 ft (1.52 m) higher; Apr. 14, 1966, to July 17, 1969, at site 350 ft (107 m) upstream at datum 3.00 ft (0.91 m) higher.

AVERAGE DISCHARGE.--52 years, 72.4 ft^3/s (2.050 m^3/s), 52,450 acre-ft/yr (64.7 hm^3/yr).

EXTREMES.--Current year: Maximum discharge, 122 ft^3/s (3.46 m^3/s) Mar. 6 (gage height, 3.23 ft or 0.985 m); minimum daily, 3.4 ft^3/s (0.096 m^3/s) July 25.
Period of record: Maximum discharge, 70,600 ft^3/s (2,000 m^3/s) Mar. 2, 1938 (gage height, 23.7 ft or 7.2 m, present datum), from rating curve extended above 10,000 ft^3/s (283 m^3/s) on basis of slope-area measurement of maximum flow; minimum daily, 3.4 ft^3/s (0.096 m^3/s) July 25, 1975.

REMARKS.--Records fair. Regulation by Lake Arrowhead, capacity, 48,000 acre-ft (59.2 hm^3) used principally for recreation, Silverwood Lake, capacity, 78,000 acre-ft (96.2 hm^3) used for the storage and distribution of imported water and recreation, and by Mojave Forks Reservoir since June 1970, capacity, 89,700 acre-ft (111 hm^3) with ungated opening, capacity, 23,500 ft^3/s (666 m^3/s). Since 1970 effluent from Mojave State Fish Hatchery diverted to Spring Valley Lake. Diversions and pumping for irrigation of about 5,000 acres (20.2 km^2) above station.

DISCHARGE, IN CUBIC FEET PER SECOND, WATER YEAR OCTOBER 1974 TO SEPTEMBER 1975
MEAN VALUES

DAY	OCT	NOV	DEC	JAN	FEB	MAR	APR	MAY	JUN	JUL	AUG	SEP
1	13	22	28	32	22	26	28	22	19	18	13	25
2	14	22	28	32	26	25	30	24	20	16	12	24
3	16	22	30	31	26	31	28	20	21	18	12	24
4	18	22	46	31	25	25	28	22	21	18	9.5	25
5	16	22	31	30	22	31	31	24	21	25	13	28
6	16	24	30	30	26	47	34	20	21	21	8.6	32
7	19	24	31	29	26	28	28	20	20	12	8.7	28
8	19	24	30	29	25	32	30	20	19	10	13	24
9	19	24	31	28	25	32	42	19	19	23	18	22
10	18	24	31	28	25	28	26	19	20	25	19	25
11	16	24	30	26	26	31	32	16	21	20	7.0	18
12	16	24	32	30	25	34	30	16	21	19	7.9	17
13	18	24	32	28	25	32	31	15	24	15	11	16
14	18	26	34	26	26	34	31	15	22	11	11	16
15	28	26	34	26	25	34	30	15	21	8.9	11	16
16	48	26	32	26	26	32	30	16	19	14	11	16
17	18	26	34	25	28	32	25	15	20	16	13	16
18	19	26	32	26	31	32	25	15	15	10	15	16
19	19	28	34	25	25	34	25	15	8.7	13	16	16
20	19	28	31	25	31	32	26	19	12	14	19	16
21	19	28	31	24	24	31	24	19	20	22	19	16
22	19	28	32	26	25	30	25	16	16	21	19	16
23	19	28	32	25	30	32	24	18	26	16	18	16
24	20	28	31	24	26	32	25	18	21	11	19	15
25	20	28	31	24	30	31	25	16	24	3.4	19	15
26	20	28	32	25	25	36	26	16	18	7.9	19	15
27	20	26	28	26	28	30	24	18	7.9	11	19	15
28	21	28	31	24	28	31	24	19	15	19	16	15
29	22	28	32	25	---	30	26	19	16	16	19	15
30	22	28	32	22	---	30	24	19	20	10	19	18
31	22	---	30	25	---	31	---	18	---	13	20	---
TOTAL	611	766	983	833	732	976	837	563	568.6	477.2	454.7	576
MEAN	19.7	25.5	31.7	26.9	26.1	31.5	27.9	18.2	19.0	15.4	14.7	19.2
MAX	48	28	46	32	31	47	42	24	26	25	20	32
MIN	13	22	28	22	22	25	24	15	7.9	3.4	7.0	15
AC-FT	1210	1520	1950	1650	1450	1940	1660	1120	1130	947	902	1140

CAL YR 1974 TOTAL 8579.4 MEAN 23.5 MAX 70 MIN 7.9 AC-FT 17020
WTR YR 1975 TOTAL 8377.5 MEAN 23.0 MAX 48 MIN 3.4 AC-FT 16620

10261500 MOJAVE RIVER AT LOWER NARROWS, NEAR VICTORVILLE, CALIF.--Continued

PERIOD OF RECORD.--Chemical analyses: October 1966 to September 1968, water years 1969-74 (partial-record station), October 1974 to current year.
Specific conductance: June to September 1975.
Water temperatures: March 1962 to September 1965, June to September 1975.
Sediment records: Water year 1975 (partial-record station).

EXTREMES.--Current year:
Specific conductance: Maximum recorded, 642 micromhos June 27; minimum recorded, 516 micromhos Sept. 4.
Water temperatures: Maximum recorded, 33.0°C Aug. 2; minimum recorded, 13.0°C June 4.
Period of record:
Specific conductance: Maximum recorded, 642 micromhos June 27, 1975; minimum recorded, 516 micromhos Sept. 4, 1975.
Water temperatures: Maximum, 34.5°C July 23, Aug. 14, 1962; minimum, 4.0°C Jan. 13, 1963.

REMARKS.--The letter "A" following a date indicates chemical-quality data furnished by California Department of Water Resources. Periods of missing conductivity and temperature data due to equipment malfunction; Sept. 8-26 due to channel work.

WATER QUALITY DATA, WATER YEAR OCTOBER 1974 TO SEPTEMBER 1975

DATE	TIME	INSTANTANEOUS DISCHARGE (CFS)	DISSOLVED SILICA (SIO2) (MG/L)	DISSOLVED CALCIUM (CA) (MG/L)	DISSOLVED MAGNESIUM (MG) (MG/L)	DISSOLVED SODIUM (NA) (MG/L)	DISSOLVED POTASSIUM (K) (MG/L)	BICARBONATE (HCO3) (MG/L)	CARBONATE (CO3) (MG/L)	ALKALINITY AS CACO3 (MG/L)	DISSOLVED SULFATE (SO4) (MG/L)
JAN.											
27...	1230	26	26	51	11	51	6.9	214	--	176	53
FEB.											
13...	1110	25	23	50	11	51	7.2	215	--	176	54
MAR.											
19...	1125	34	25	47	11	50	7.4	215	0	176	54
APR.											
29...	1110	28	23	50	11	52	6.4	230	0	189	54
MAY											
30...	1100	22	24	49	10	56	7.7	219	0	180	54
JUNE											
30...	1115	20	25	49	10	62	11	226	0	185	56
JULY											
17...	1150	31	25	48	10	57	9.1	201	0	165	60
AUG.											
21...	1130	22	25	46	9.0	63	12	223	0	183	59
SEP.											
26...	1235	15	24	47	9.3	60	8.5	218	0	179	55

DATE	DISSOLVED CHLORIDE (CL) (MG/L)	DISSOLVED FLUORIDE (F) (MG/L)	TOTAL NITRITE PLUS NITRATE (N) (MG/L)	TOTAL KJELDAHL NITROGEN (N) (MG/L)	TOTAL NITROGEN (N) (MG/L)	TOTAL NITROGEN (NO3) (MG/L)	TOTAL PHOSPHORUS (P) (MG/L)	DISSOLVED SOLIDS (RESIDUE AT 180 C) (MG/L)	DISSOLVED SOLIDS (SUM OF CONSTITUENTS) (MG/L)	DISSOLVED SOLIDS (TONS PER AC-FT)	DISSOLVED SOLIDS (TONS PER DAY)
JAN.											
27...	34	.4	1.7	1.3	3.0	13	.40	346	339	.47	24.3
FEB.											
13...	33	.4	1.6	.87	2.5	11	.33	336	336	.46	22.7
MAR.											
19...	32	.6	1.6	1.1	2.7	12	.33	335	333	.46	30.8
APR.											
29...	35	.5	1.4	.91	2.3	10	.38	332	345	.45	25.1
MAY											
30...	37	.5	1.3	.28	1.6	7.0	.42	344	346	.47	20.4
JUNE											
30...	37	.7	.88	1.4	2.3	10	.67	375	362	.51	20.2
JULY											
17...	40	.7	.98	.86	1.8	8.1	.56	371	349	.50	31.1
AUG.											
21...	39	.7	.84	1.4	2.2	9.9	.85	362	364	.49	21.5
SEP.											
26...	37	.6	.77	3.2	4.0	18	.56	354	349	.48	14.3

10261500 MOJAVE RIVER AT LOWER NARROWS, NEAR VICTORVILE, CALIF.--Continued

WATER QUALITY DATA, WATER YEAR OCTOBER 1974 TO SEPTEMBER 1975

DATE	HARDNESS (CA,MG) (MG/L)	NON-CARBONATE HARDNESS (MG/L)	PERCENT SODIUM	SODIUM ADSORPTION RATIO	SPECIFIC CONDUCTANCE (MICROMHOS)	PH (UNITS)	TEMPERATURE (DEG C)	TURBIDITY (JTU)	TOTAL PHYTOPLANKTON (CELLS PER ML)	FECAL COLIFORM (COL. PER 100 ML)	STREPTOCOCCI (COLONIES PER 100 ML)
JAN.											
27...	170	0	38	1.7	574	8.2	8.2	3	630	11	18
FEB.											
13...	170	0	38	1.7	551	8.2	13.0	3	1000	84	30
MAR.											
19...	160	0	39	1.7	560	8.2	17.8	2	6100	0	27
APR.											
29...	170	0	39	1.7	550	8.0	19.2	2	1400	89	84
MAY											
30...	160	0	41	1.9	570	8.0	24.2	2	3700	810	85
JUNE											
30...	160	0	43	2.1	607	7.7	26.5	3	1100	22	8140
JULY											
17...	160	0	42	2.0	581	8.1	25.8	3	2400	92	700
AUG.											
21...	150	0	45	2.2	585	7.9	23.7	3	1700	38	195
SEP.											
26...	160	0	44	2.1	552	7.9	27.6	1	5000	40	200

DATE	TIME	INSTANTANEOUS DISCHARGE (CFS)	DISSOLVED IRON (FE) (UG/L)	DISSOLVED CALCIUM (CA) (MG/L)	DISSOLVED MAGNESIUM (MG) (MG/L)	DISSOLVED SODIUM (NA) (MG/L)	DISSOLVED POTASSIUM (K) (MG/L)	BICARBONATE (HCO3) (MG/L)	CARBONATE (CO3) (MG/L)	ALKALINITY AS CACO3 (MG/L)	DISSOLVED SULFATE (SO4) (MG/L)	DISSOLVED CHLORIDE (CL) (MG/L)
NOV.												
20...A	1200	28	--	54	9.4	53	5.9	209	0	171	57	36
JAN.												
22...A	1230	26	--	50	10	52	7.0	216	0	177	56	35
APR.												
23...A	1215	25	--	49	10	51	5.9	208	0	171	57	34
MAY												
22...A	1400	16	40	--	--	--	--	--	--	--	--	--
JULY												
23...A	1145	19	--	53	6.3	60	10	217	0	178	58	38

DATE	DISSOLVED FLUORIDE (F) (MG/L)	TOTAL NITRATE (N) (MG/L)	DISSOLVED ORTHO. PHOSPHORUS (P) (MG/L)	DISSOLVED SOLIDS (RESIDUE AT 180 C) (MG/L)	DISSOLVED SOLIDS (TONS PER AC-FT)	HARDNESS (CA,MG) (MG/L)	NON-CARBONATE HARDNESS (MG/L)	PERCENT SODIUM	SODIUM ADSORPTION RATIO	SPECIFIC CONDUCTANCE (MICROMHOS)	PH (UNITS)
NOV.											
20...	.5	2.7	.40	332	.45	172	1	39	1.8	550	7.8
JAN.											
22...	.6	2.7	.44	368	.50	168	0	39	1.8	490	7.8
APR.											
23...	.5	2.0	.25	348	.47	166	0	39	1.7	475	7.8
MAY											
22...	--	--	--	--	--	--	--	--	--	--	--
JULY											
23...	.7	1.6	.42	367	.50	158	0	43	2.1	550	7.8

DATE	TEMPERATURE (DEG C)	TURBIDITY (JTU)	DISSOLVED OXYGEN (MG/L)	METHYLENE BLUE ACTIVE SUBSTANCE (MG/L)	DISSOLVED ARSENIC (AS) (UG/L)	DISSOLVED BORON (B) (UG/L)	DISSOLVED CADMIUM (CD) (UG/L)	DISSOLVED COPPER (CU) (UG/L)	DISSOLVED LEAD (PB) (UG/L)	TOTAL MERCURY (HG) (UG/L)	DISSOLVED ZINC (ZN) (UG/L)
NOV.											
20...	16.5	11	7.1	.2	--	110	--	--	--	--	--
JAN.											
22...	13.0	6	8.5	.2	--	160	--	--	--	--	--
APR.											
23...	17.0	3	7.1	.2	--	150	--	--	--	--	--
MAY											
22...	25.5	--	--	--	0	--	0	0	0	.1	0
JULY											
23...	28.0	3	5.4	.2	--	140	--	--	--	--	--

10261500 MOJAVE RIVER AT LOWER NARROWS, NEAR VICTORVILLE, CALIF.--Continued

BIOLOGICAL ANALYSES, WATER YEAR OCTOBER 1974 TO SEPTEMBER 1975

PHYTOPLANKTON

DATE	PHYLUM .CLASS ..ORDER ...FAMILY ....GENUS .....SPECIES	COMMON NAME	COUNT (CELLS/ML)	PERCENT OF TOTAL
JAN 27	CHRYSOPHYTA	YELLOW-GREEN ALGAE		
	.BACILLARIOPHYCEAE	DIATOMS		
	..PENNALES	PENNATE		
	...ACHNANTHACEAE			
	....COCCONEIS		140	22
	...FRAGILARIACEAE			
	....SYNEDRA		35	6
	...GOMPHONEMATACEAE			
	....GOMPHONEMA		35	6
	...NAVICULACEAE	NAVICULOID		
	....NAVICULA		280	44
	....PINNULARIA		35	6
	...NITZSCHIACEAE			
	....DENTICULA		35	6
	....NITZSCHIA		70	11
	TOTAL PHYTOPLANKTON		630	
FEB 13	CHLOROPHYTA	GREEN ALGAE		
	.CHLOROPHYCEAE			
	..CHLOROCOCCALES			
	...SCENEDESMACEAE			
	....SCENEDESMUS		100	10
	CHRYSOPHYTA	YELLOW-GREEN ALGAE		
	.BACILLARIOPHYCEAE	DIATOMS		
	..CENTRALES	CENTRIC		
	...COSCINODISCACEAE			
	....CYCLOTELLA		100	10
	..PENNALES	PENNATE		
	...ACHNANTHACEAE			
	....ACHNANTHES		310	31
	...CYMBELLACEAE			
	....CYMBELLA		69	7
	...DIATOMACEAE			
	....DIATOMA		34	3
	...FRAGILARIACEAE			
	....SYNEDRA		34	3
	...GOMPHONEMATACEAE			
	....GOMPHONEMA		34	3
	...NAVICULACEAE	NAVICULOID		
	....NAVICULA		240	24
	...NITZSCHIACEAE			
	....NITZSCHIA		69	7
	TOTAL PHYTOPLANKTON		1000	
MAR 19	CHLOROPHYTA	GREEN ALGAE		
	.CHLOROPHYCEAE			
	..CHLOROCOCCALES			
	...OOCYSTACEAE			
	....OOCYSTIS		190	25
	...SCENEDESMACEAE			
	....SCENEDESMUS		140	19
	CHRYSOPHYTA	YELLOW-GREEN ALGAE		
	.BACILLARIOPHYCEAE	DIATOMS		
	..CENTRALES	CENTRIC		
	...COSCINODISCACEAE			
	....CYCLOTELLA		19	2
	..PENNALES	PENNATE		
	...ACHNANTHACEAE			
	....ACHNANTHES		210	29
	...CYMBELLACEAE			
	....CYMBELLA		19	2
	...DIATOMACEAE			
	....DIATOMA		19	2
	...FRAGILARIACEAE			
	....SYNEDRA		56	7
	...GOMPHONEMATACEAE			
	....GOMPHONEMA		9	1
	...NAVICULACEAE	NAVICULOID		
	....NEIDIUM		19	2
	...NITZSCHIACEAE			
	....NITZSCHIA		65	9
	TOTAL PHYTOPLANKTON		750	

10261500 MOJAVE RIVER AT LOWER NARROWS, NEAR VICTORVILLE, CALIF.--Continued

BIOLOGICAL ANALYSES, WATER YEAR OCTOBER 1974 TO SEPTEMBER 1975

PHYTOPLANKTON

DATE	PHYLUM .CLASS ..ORDER ...FAMILY ....GENUS .....SPECIES	COMMON NAME	COUNT (CELLS/ML)	PERCENT OF TOTAL
APR 29	CHLOROPHYTA	GREEN ALGAE		
	.CHLOROPHYCEAE			
	..CHLOROCOCCALES			
	...SCENEDESMACEAE			
	....SCENEDESMUS		150	10
	CHRYSOPHYTA	YELLOW-GREEN ALGAE		
	.BACILLARIOPHYCEAE	DIATOMS		
	..CENTRALES	CENTRIC		
	...COSCINODISCACEAE			
	....CYCLOTELLA		150	10
	..PENNALES	PENNATE		
	...CYMBELLACEAE			
	....CYMBELLA		290	21
	...GOMPHONEMATACEAE			
	....GOMPHONEMA		36	3
	...NAVICULACEAE	NAVICULOID		
	....NAVICULA		660	46
	...NITZSCHIACEAE			
	....NITZSCHIA		150	10
	TOTAL PHYTOPLANKTON		1400	
MAY 30	CHLOROPHYTA	GREEN ALGAE		
	.CHLOROPHYCEAE			
	..CHLOROCOCCALES			
	...SCENEDESMACEAE			
	....SCENEDESMUS		450	12
	CHRYSOPHYTA	YELLOW-GREEN ALGAE		
	.BACILLARIOPHYCEAE	DIATOMS		
	..PENNALES	PENNATE		
	...ACHNANTHACEAE			
	....ACHNANTHES		110	3
	...CYMBELLACEAE			
	....CYMBELLA		340	9
	...NAVICULACEAE	NAVICULOID		
	....NAVICULA		1600	42
	...NITZSCHIACEAE			
	....NITZSCHIA		340	9
	CYANOPHYTA	BLUE-GREEN ALGAE		
	.MYXOPHYCEAE			
	..CHROOCOCCALES			
	...CHROOCOCCACEAE			
	....AGMENELLUM		900	24
	TOTAL PHYTOPLANKTON		3700	
JUNE 30	CHLOROPHYTA	GREEN ALGAE		
	.CHLOROPHYCEAE			
	..CHLOROCOCCALES			
	...SCENEDESMACEAE			
	....SCENEDESMUS		230	20
	CHRYSOPHYTA	YELLOW-GREEN ALGAE		
	.BACILLARIOPHYCEAE	DIATOMS		
	..CENTRALES	CENTRIC		
	...COSCINODISCACEAE			
	....CYCLOTELLA		56	5
	..PENNALES	PENNATE		
	...CYMBELLACEAE			
	....CYMBELLA		56	5
	...FRAGILARIACEAE			
	....FRAGILARIA		110	10
	...NAVICULACEAE	NAVICULOID		
	....CALONEIS		56	5
	....NAVICULA		560	50
	...NITZSCHIACEAE			
	....NITZSCHIA		56	5
	TOTAL PHYTOPLANKTON		1100	

10261500 MOJAVE RIVER AT LOWER NARROWS, NEAR VICTORVILLE, CALIF.--Continued

BIOLOGICAL ANALYSES, WATER YEAR OCTOBER 1974 TO SEPTEMBER 1975

PHYTOPLANKTON

DATE	PHYLUM .CLASS ..ORDER ...FAMILY ....GENUS .....SPECIES	COMMON NAME	COUNT (CELLS/ML)	PERCENT OF TOTAL
JULY				
17	CHLOROPHYTA	GREEN ALGAE		
	.CHLOROPHYCEAE			
	..CHLOROCOCCALES			
	...SCENEDESMACEAE			
	....SCENEDESMUS		200	8
	CHRYSOPHYTA	YELLOW-GREEN ALGAE		
	.BACILLARIOPHYCEAE	DIATOMS		
	..CENTRALES	CENTRIC		
	...COSCINODISCACEAE			
	....CYCLOTELLA		29	1
	....MELOSIRA		58	2
	..PENNALES	PENNATE		
	...ACHNANTHACEAE			
	....ACHNANTHES		140	6
	...GOMPHONEMATACEAE			
	....GOMPHONEMA		170	7
	...NAVICULACEAE	NAVICULOID		
	....NAVICULA		870	36
	...NITZSCHIACEAE			
	....NITZSCHIA		230	10
	CYANOPHYTA	BLUE-GREEN ALGAE		
	.MYXOPHYCEAE			
	..CHROOCOCCALES			
	...CHROOCOCCACEAE			
	....ANACYSTIS		120	5
	..OSCILLATORIALES	FILAMENTOUS		
	...OSCILLATORIACEAE			
	....LYNGBYA		580	24
	TOTAL PHYTOPLANKTON		2400	
AUG-				
21	CHLOROPHYTA	GREEN ALGAE		
	.CHLOROPHYCEAE			
	..CHLOROCOCCALES			
	...CHARACIACEAE			
	....SCHRODERIA		66	4
	...HYDRODICTYACEAE			
	....HYDRODICTYN			0
	...SCENEDESMACEAE			
	....SCENEDESMUS		130	7
	CHRYSOPHYTA	YELLOW-GREEN ALGAE		
	.BACILLARIOPHYCEAE	DIATOMS		
	..CENTRALES	CENTRIC		
	...COSCINODISCACEAE			
	....CYCLOTELLA		160	9
	..PENNALES	PENNATE		
	...DIATOMACEAE			
	....DIATOMA			0
	...FRAGILARIACEAE			
	....SYNEDRA		33	2
	...GOMPHONEMATACEAE			
	....GOMPHONEMA		99	6
	...NAVICULACEAE	NAVICULOID		
	....NAVICULA		360	20
	...NITZSCHIACEAE			
	....NITZSCHIA		330	19
	CYANOPHYTA	BLUE-GREEN ALGAE		
	.MYXOPHYCEAE			
	..OSCILLATORIALES	FILAMENTOUS		
	...NOSTOCACEAE			
	....ANABAENA		590	33
	....APHANIZOMENON			0
	TOTAL PHYTOPLANKTON		1800	

10261500 MOJAVE RIVER AT LOWER NARROWS, NEAR VICTORVILLE, CALIF.--Continued

BIOLOGICAL ANALYSES, WATER YEAR OCTOBER 1974 TO SEPTEMBER 1975

PHYTOPLANKTON

DATE	PHYLUM .CLASS ..ORDER ...FAMILY ....GENUS .....SPECIES	COMMON NAME	COUNT (CELLS/ML)	PERCENT OF TOTAL
SEP				
26	CHLOROPHYTA	GREEN ALGAE		
	.CHLOROPHYCEAE			
	..CHLOROCOCCALES			
	...HYDRODICTYACEAE			
	....HYDRODICTYN			
	....PEDIASTRUM			0
	...SCENEDESMACEAE			0
	....SCENEDESMUS			
	..VOLVOCALES			0
	...VOLVOCAEAE			
	....PANDORINA			
	..ZYGNEMATALES			0
	...ZYGNEMATACEAE			
	....ZYGNEMA			
	CHRYSOPHYTA	YELLOW-GREEN ALGAE		0
	.BACILLARIOPHYCEAE	DIATOMS		
	..PENNALES	PENNATE		
	...ACHNANTHACEAE			
	....ACHNANTHES		210	4
	...CYMBELLACEAE			
	....RHOPALODIA			
	...FRAGILARIACEAE			0
	....SYNEDRA			
	...NAVICULACEAE	NAVICULOID		0
	....NAVICULA			
	...NITZSCHIACEAE		3800	75
	....NITZSCHIA			
	...SURIRELLACEAE		840	17
	....SURIRELLA			
	CYANOPHYTA	BLUE-GREEN ALGAE		0
	.MYXOPHYCEAE			
	..OSCILLATORIALES	FILAMENTOUS		
	...OSCILLATORIACEAE			
	....OSCILLATORIA			
	EUGLENOPHYTA			0
	.EUGLENOPHYCEAE			
	..EUGLENALES			
	...EUGLENACEAE			
	....EUGLENA		210	4
	TOTAL PHYTOPLANKTON		5000	

QUALITATIVE AND ASSOCIATED QUANTITATIVE ANALYSES OF BIOLOGICAL DATA, WATER YEAR OCTOBER 1974 TO SEPTEMBER 1975

PERIPHYTON

Date	Length of exposure (days)	Biomass (g/m^2) Dry weight	Biomass (g/m^2) Ash weight	Chlorophyll a (mg/m^2)	Chlorophyll b (mg/m^2)	Biomass pigment ratio	Sampling method
Feb. 13	17	2.9	1.1	.30	.20	6000	Polyethylene strip
July 17	17	4.9	3.7	7.8	1.5	160	Polyethylene strip

10261500 MOJAVE RIVER AT LOWER NARROWS, NEAR VICTORVILLE, CALIF.--Continued

WATER QUALITY DATA, WATER YEAR OCTOBER 1974 TO SEPTEMBER 1975

DATE	TIME	TOTAL IRON (FE) (UG/L)	DIS-SOLVED IRON (FE) (UG/L)	TOTAL MAN-GANESE (MN) (UG/L)	SUS-PENDED MAN-GANESE (MN) (UG/L)	DIS-SOLVED MAN-GANESE (MN) (UG/L)	TOTAL ORGANIC CARBON (C) (MG/L)	TOTAL ARSENIC (AS) (UG/L)	SUS-PENDED ARSENIC (AS) (UG/L)	DIS-SOLVED ARSENIC (AS) (UG/L)	TOTAL CAD-MIUM (CD) (UG/L)	SUS-PENDED CAD-MIUM (CD) (UG/L)
JAN. 27...	1230	710	190	60	20	40	4.3	5	0	7	10	9
APR. 29...	1110	260	30	40	40	4	--	5	1	4	<10	<10
JULY 17...	1150	450	100	110	40	70	3.6	4	0	6	<10	<10

DATE	DIS-SOLVED CAD-MIUM (CD) (UG/L)	TOTAL CHRO-MIUM (CR) (UG/L)	SUS-PENDED CHRO-MIUM (CR) (UG/L)	DIS-SOLVED CHRO-MIUM (CR) (UG/L)	TOTAL COBALT (CO) (UG/L)	SUS-PENDED COBALT (CO) (UG/L)	DIS-SOLVED COBALT (CO) (UG/L)	TOTAL COPPER (CU) (UG/L)	SUS-PENDED COPPER (CU) (UG/L)	DIS-SOLVED COPPER (CU) (UG/L)	TOTAL LEAD (PB) (UG/L)
JAN. 27...	1	20	0	20	<50	<49	1	4500	4500	3	100
APR. 29...	0	0	0	0	<50	<50	0	<10	<8	2	100
JULY 17...	0	0	0	0	<50	<50	0	10	7	3	<100

DATE	SUS-PENDED LEAD (PB) (UG/L)	DIS-SOLVED LEAD (PB) (UG/L)	TOTAL MERCURY (HG) (UG/L)	SUS-PENDED MERCURY (HG) (UG/L)	DIS-SOLVED MERCURY (HG) (UG/L)	TOTAL SELE-NIUM (SE) (UG/L)	SUS-PENDED SELE-NIUM (SE) (UG/L)	DIS-SOLVED SELE-NIUM (SE) (UG/L)	TOTAL ZINC (ZN) (UG/L)	SUS-PENDED ZINC (ZN) (UG/L)	DIS-SOLVED ZINC (ZN) (UG/L)
JAN. 27...	95	5	.1	.1	.0	0	0	0	110	80	30
APR. 29...	99	1	--	--	.0	0	0	0	10	10	0
JULY 17...	<99	1	.0	.0	.0	0	0	0	50	30	20

SPECIFIC CONDUCTANCE (MICROMHOS/CM AT 25 DEG. C), WATER YEAR OCTOBER 1974 TO SEPTEMBER 1975

	JUNE			JULY			AUGUST			SEPTEMBER		
DAY	MAX	MIN	MEAN	MAX	MIN	MEAN	MAX	MIN	MEAN	MAX	MIN	MEAN
1	---	---	---	602	560	589	580	538	560	586	540	554
2	---	---	---	600	550	586	579	541	564	561	527	541
3	594	580	582	597	553	583	580	540	567	553	519	536
4	593	549	572	592	552	580	610	540	582	564	516	538
5	586	550	568	591	543	579	591	545	578	586	526	550
6	585	537	573	581	537	569	606	550	583	569	525	543
7	590	548	578	598	532	570	616	562	596	569	525	542
8	596	548	572	583	545	574	597	561	585	---	---	---
9	593	547	571	583	553	571	593	551	581	---	---	---
10	594	546	570	582	542	570	592	562	580	---	---	---
11	601	553	588	573	533	563	611	559	584	---	---	---
12	596	550	581	573	525	560	613	571	595	---	---	---
13	595	549	579	582	528	559	604	564	586	---	---	---
14	596	548	579	611	567	585	605	571	589	---	---	---
15	599	543	583	618	586	605	603	567	588	---	---	---
16	596	544	581	612	586	601	604	570	591	---	---	---
17	583	555	588	605	565	584	608	566	591	---	---	---
18	628	556	594	608	568	589	611	559	589	---	---	---
19	636	576	614	596	548	574	604	566	586	---	---	---
20	631	577	600	599	549	574	597	563	581	---	---	---
21	628	576	601	596	546	574	601	551	574	---	---	---
22	625	571	603	586	540	566	585	551	567	---	---	---
23	620	570	594	587	539	573	596	548	570	---	---	---
24	617	561	587	593	551	578	580	544	566	---	---	---
25	608	562	580	614	566	601	581	539	561	---	---	---
26	635	559	598	607	563	593	603	557	578	552	546	549
27	642	582	616	599	551	589	606	542	574	559	543	552
28	632	576	614	594	542	574	574	536	556	555	546	552
29	627	579	614	589	537	567	569	531	546	561	547	554
30	624	580	606	587	545	562	575	531	547	560	546	553
31	---	---	---	584	544	559	570	530	548	---	---	---
MONTH	642	537	589	618	525	577	616	530	576	---	---	---

10261500 MOJAVE RIVER AT LOWER NARROWS, NEAR VICTORVILLE, CALIF.--Continued

WATER QUALITY DATA, WATER YEAR OCTOBER 1974 TO SEPTEMBER 1975

TEMPERATURE (DEG. C) OF WATER, WATER YEAR OCTOBER 1974 TO SEPTEMBER 1975

	JUNE			JULY			AUGUST			SEPTEMBER		
DAY	MAX	MIN	MEAN	MAX	MIN	MEAN	MAX	MIN	MEAN	MAX	MIN	MEAN
1	---	---	---	29.5	14.5	20.5	32.5	16.0	23.0	28.0	16.0	20.5
2	---	---	---	28.0	14.5	20.0	33.0	16.5	23.0	28.5	15.5	21.0
3	---	---	---	28.5	14.0	20.0	32.5	17.0	23.5	28.0	16.5	21.5
4	29.0	13.0	20.0	---	---	---	30.0	17.5	23.0	30.0	18.0	23.0
5	30.0	14.0	20.5	---	---	---	32.0	18.5	24.0	29.5	18.0	23.0
6	28.0	14.5	19.5	---	---	---	30.0	18.0	23.0	28.5	17.5	22.5
7	28.5	13.5	19.5	---	---	---	32.5	18.5	23.5	28.5	19.0	23.0
8	28.5	14.5	20.0	---	---	---	31.0	18.5	23.5	---	---	---
9	29.5	14.0	21.0	---	---	---	29.5	18.5	23.0	---	---	---
10	29.5	14.0	20.5	---	---	---	31.0	18.0	23.5	---	---	---
11	28.0	14.0	20.5	---	---	---	28.5	17.5	22.5	---	---	---
12	29.0	14.0	20.5	---	---	---	29.5	17.0	21.5	---	---	---
13	31.0	14.5	21.5	---	---	---	30.0	16.5	21.5	---	---	---
14	32.0	15.0	21.5	---	---	---	30.0	16.0	21.5	---	---	---
15	31.0	15.0	21.5	---	---	---	30.0	16.0	21.0	---	---	---
16	28.0	15.0	20.5	---	---	---	30.0	16.0	21.5	---	---	---
17	---	---	---	---	---	---	30.0	16.5	21.5	---	---	---
18	---	---	---	30.0	17.5	22.5	29.0	17.0	21.0	---	---	---
19	---	---	---	31.0	16.5	22.5	29.0	17.5	21.5	---	---	---
20	---	---	---	31.0	16.5	22.5	24.0	16.5	19.5	---	---	---
21	---	---	---	30.5	17.0	22.5	29.0	18.0	20.5	---	---	---
22	---	---	---	31.0	16.5	23.0	29.0	16.0	21.5	---	---	---
23	---	---	---	32.0	17.0	23.5	28.5	16.0	21.0	---	---	---
24	---	---	---	32.5	18.0	24.5	29.5	15.5	21.5	---	---	---
25	---	---	---	32.0	18.5	24.0	29.5	16.0	21.0	---	---	---
26	---	---	---	32.5	19.0	24.0	27.5	16.5	20.5	---	---	---
27	---	---	---	32.0	20.0	24.0	27.5	15.5	20.0	28.0	14.5	19.5
28	---	---	---	28.5	20.0	23.0	27.5	15.5	20.5	27.0	14.5	19.0
29	---	---	---	29.5	19.5	23.0	28.0	16.0	21.0	26.5	14.0	19.0
30	---	---	---	30.0	18.0	22.5	29.5	15.5	21.5	26.5	14.5	19.5
31	---	---	---	31.0	16.0	22.5	27.0	15.5	20.5	---	---	---
MONTH	---	---	---	---	---	---	33.0	15.5	22.0	---	---	---

PARTICLE-SIZE DISTRIBUTION OF SUSPENDED SEDIMENT, WATER YEAR OCTOBER 1974 TO SEPTEMBER 1975

DATE	TIME	INSTANTANEOUS DISCHARGE (CFS)	TEMPERATURE (DEG C)	SUSPENDED SEDIMENT (MG/L)	SUSPENDED SEDIMENT DISCHARGE (T/DAY)	SUS. SED. SIEVE DIAM. % FINER THAN .062 MM
JAN. 27...	1230	26	8.2	56	3.9	25
FEB. 13...	1110	25	13.0	52	3.5	26
MAR. 19...	1135	34	17.8	27	2.5	46
APR. 29...	1110	28	19.2	12	.91	51
MAY 30...	1100	22	24.2	25	1.5	37
JUNE 30...	1115	20	26.5	9	.49	44
JULY 17...	1150	31	25.8	17	1.4	59
AUG. 21...	1130	22	23.7	33	2.0	78
SEP. 26...	1235	15	27.6	92	3.7	29

10262000 MOJAVE RIVER NEAR HODGE, CALIF.

LOCATION.--Lat 34°50'09", long 117°11'27", in SW¼SE¼SE¼ sec.28, T.9 N., R.3 W., San Bernardino County, at county bridge 1.5 mi (2.4 km) north of Hodge, and 10.9 mi (17.5 km) southwest of Barstow.

DRAINAGE AREA.--1,090 mi^2 (2,823 km^2).

PERIOD OF RECORD.--October 1930 to September 1932, October 1970 to current year.

GAGE.--Water-stage recorder and crest-stage gage. Altitude of gage is 2,260 ft (689 m), from topographic map. Prior to Oct. 1, 1970, at different datum.

AVERAGE DISCHARGE.--7 years (1930-32, 1970-75), 13.2 ft^3/s (0.374 m^3/s), 9,560 acre-ft/yr (11.8 hm^3/yr).

EXTREMES.--Current year: No flow during year.
Period of record: Maximum discharge, 8,900 ft^3/s (252 m^3/s) Feb. 9, 1932 (gage height, 5.20 ft or 1.585 m, datum then in use); no flow all or most of each year.

REMARKS.--No flow since Aug. 3, 1974. Regulation by Lake Arrowhead, capacity, 48,000 acre-ft (59.2 hm^3) used principally for recreation, Silverwood Lake, capacity, 78,000 acre-ft (96.2 hm^3) used for the storage and distribution of imported water and recreation, and Mojave Forks Reservoir, capacity, 89,700 acre-ft (111 hm^3), with ungated opening, capacity, 23,500 ft^3/s (666 m^3/s). Diversion and pumping for irrigation of about 12,000 acres (48.6 km^2) above station.

NOTE.--No gage-height record Oct. 1 to Nov. 24, Aug. 7 to Sept. 30.

10262500 MOJAVE RIVER AT BARSTOW, CALIF.

LOCATION.--Lat 34°54'25", long 117°01'19", in SE¼SW¼SW¼ sec.31, T.10 N., R.1 W., San Bernardino County, on left bank 75 ft (23 m) upstream from bridge on U.S. Highway 91 at Barstow.

DRAINAGE AREA.--1,290 mi^2 (3,341 km^2).

PERIOD OF RECORD.--October 1930 to current year.

GAGE.--Water-stage recorder. Datum of gage is 2,089.34 (636.831 m) above mean sea level.

AVERAGE DISCHARGE.--45 years, 22.6 ft^3/s (0.640 m^3/s), 16,370 acre-ft/yr (20.2 hm^3/yr).

EXTREMES.--Current year: Maximum discharge, 4.0 ft^3/s (0.11 m^3/s) Sept. 16, on basis of estimate of maximum flow; no flow most of year.
Period of record: Maximum discharge, 64,300 ft^3/s (1,820 m^3/s) Mar. 3, 1938 (gage height, 8.60 ft or 2.621 m), on basis of slope-area measurement of maximum flow; no flow for most months each year.

REMARKS.--Records poor. Regulation by Lake Arrowhead, capacity, 48,000 acre-ft (59.2 hm^3) used principally for recreation, Silverwood Lake, capacity, 78,000 acre-ft (96.2 hm^3) used for the storage and distribution of imported water and recreation, and Mojave Forks Reservoir, capacity, 89,700 acre-ft (111 hm^3) with ungated opening, capacity, 23,500 ft^3/s (666 m^3/s). Diversions and pumping for irrigation of about 15,000 acres (60.7 km^2) above station.

DISCHARGE, IN CUBIC FEET PER SECOND, WATER YEAR OCTOBER 1974 TO SEPTEMBER 1975
MEAN VALUES

DAY	OCT	NOV	DEC	JAN	FEB	MAR	APR	MAY	JUN	JUL	AUG	SEP
1												0
2												0
3												0
4												0
5												0
6												0
7												0
8												0
9												0
10												0
11												0
12												0
13												0
14												0
15												0
16												.17
17												0
18												0
19												0
20												0
21												0
22												0
23												0
24												0
25												0
26												0
27												0
28												0
29					---							0
30					---							0
31		---			---		---		---			---
TOTAL	0	0	0	0	0	0	0	0	0	0	0	.17
MEAN	0	0	0	0	0	0	0	0	0	0	0	.006
MAX	0	0	0	0	0	0	0	0	0	0	0	.17
MIN	0	0	0	0	0	0	0	0	0	0	0	0
AC-FT	0	0	0	0	0	0	0	0	0	0	0	.3

CAL YR 1974 TOTAL 0.21 MEAN .0006 MAX .21 MIN 0 AC-FT .4
WTR YR 1975 TOTAL 0.17 MEAN .0005 MAX .17 MIN 0 AC-FT .3

Peak discharge (base, 100 ft^3/s).--No peak above base.

10263000 MOJAVE RIVER AT AFTON, CALIF.

LOCATION.--Lat 35°02'14", long 116°23'00", in SW¼NW¼SE¼ sec.18, T.11 N., R.6 E., San Bernardino County, on downstream end of right pier of Union Pacific Railroad bridge, 0.3 mi (0.5 km) west of Afton.

DRAINAGE AREA.--2,120 mi^2 (5,490 km^2).

PERIOD OF RECORD.--October 1929 to September 1932, October 1952 to current year. Records for the water year 1930 incomplete, yearly estimate published in WSP 1314.

GAGE.--Water-stage recorder. Datum of gage is 1,400.15 ft (426.766 m) above mean sea level. Dec. 21, 1929, to Sept. 30, 1932, at site 1.7 mi (2.7 km) downstream at different datum.

AVERAGE DISCHARGE.--26 years, 5.48 ft^3/s (0.155 m^3/s), 3,970 acre-ft/yr (4.90 hm^3/yr).

EXTREMES.--Current year: Maximum discharge, 1.02 ft^3/s (0.029 m^3/s) June 7 (gage height, 5.17 ft or 1.576 m); no flow many days.
Period of record: Maximum discharge, 18,000 ft^3/s (510 m^3/s) Jan. 26, 1969 (gage height, 10.40 ft or 3.170 m), from rating curve extended above 3,200 ft^3/s (90.6 m^3/s) on basis of slope-area measurement of maximum flow; no flow at times many years.

REMARKS.--Records poor. Natural flow affected by ground-water withdrawals, diversions, municipal use, and storage in upstream reservoirs (see sta 10261500).

DISCHARGE, IN CUBIC FEET PER SECOND, WATER YEAR OCTOBER 1974 TO SEPTEMBER 1975
MEAN VALUES

DAY	OCT	NOV	DEC	JAN	FEB	MAR	APR	MAY	JUN	JUL	AUG	SEP
1	0	.25	.31	.38	.64	.52	.06	.25	0			
2	0	.20	.31	.38	.64	.76	.25	.25	0			
3	0	.25	.38	.31	.64	.88	.31	.16	0			
4	0	.20	.38	.64	.64	.64	.38	.10	0			
5	0	.16	.38	.76	.64	.44	.45	.06	0			
6	0	.13	.38	.76	.64	.13	.45	.08	0			
7	.03	.13	.38	.88	.64	.20	.45	.10	.01			
8	.04	.13	.31	.88	.64	.16	.52	.10	0			
9	.13	.16	.38	.64	.64	.10	1.0	.10	0			
10	.13	.25	.38	.52	.64	.06	.88	.10	0			
11	.20	.20	.38	.64	.64	.05	.76	.08	0			
12	.16	.16	.45	.38	.45	.10	.64	.13	0			
13	.16	.16	.45	.45	.52	.16	.52	.20	0			
14	.16	.16	.45	.45	.52	.16	.45	.25	0			
15	.16	.16	.52	.52	.52	.04	.38	.16	0			
16	.20	.20	.52	.52	.52	.01	.38	.16	0			
17	.20	.20	.48	.52	.52	.05	.31	.20	0			
18	.20	.16	.45	.52	.52	.08	.31	.31	0			
19	.13	.16	.38	.52	.76	.31	.31	.31	0			
20	.16	.20	.31	.52	.64	.31	.38	.20	0			
21	.25	.25	.25	.52	.64	.25	.45	.20	0			
22	.25	.20	.20	.64	.64	.20	.38	.18	0			
23	.20	.20	.10	.64	.64	.20	.38	.10	0			
24	.31	.31	.05	.64	.52	.20	.38	.08	0			
25	.31	.31	.03	.64	.52	.05	.38	0	0			
26	.25	.31	.06	.64	.52	.10	.20	0	0			
27	.25	.31	.25	.64	.52	.10	.20	0	0			
28	.25	.38	.45	.64	.52	.08	.25	0	0			
29	.10	.38	.45	.64	---	.20	.31	0	0			
30	.13	.38	.52	.64	---	.20	.31	0	0			
31	.25	---	.52	.64	---	.10	---	0	---			---
TOTAL	4.61	6.65	10.86	18.11	16.53	6.84	12.43	3.86	.01	0	0	0
MEAN	.15	.22	.35	.58	.59	.22	.41	.12	.0003	0	0	0
MAX	.31	.38	.52	.88	.76	.88	1.0	.31	.01	0	0	0
MIN	0	.13	.03	.31	.45	.01	.06	0	0	0	0	0
AC-FT	9.1	13	22	36	33	14	25	7.7	.02	0	0	0

CAL YR 1974 TOTAL 198.89 MEAN .54 MAX 33 MIN 0 AC-FT 394
WTR YR 1975 TOTAL 79.90 MEAN .22 MAX 1.0 MIN 0 AC-FT 158

10263500 BIG ROCK CREEK NEAR VALYERMO, CALIF.

LOCATION.--Lat 34°25'15", long 117°50'19", in NW¼SE¼NE¼ sec.20, T.4 N., R.9 W., Los Angeles County, on left bank 0.1 mi (0.2 km) upstream from Punchbowl Canyon, and 1.9 mi (3.1 km) southeast of Valyermo.

DRAINAGE AREA.--22.9 mi^2 (59.3 km^2).

PERIOD OF RECORD.--January 1923 to current year. Monthly discharge only for October 1937 to January 1939, published in WSP 1314. Prior to October 1954, published as Rock Creek near Valyermo.

GAGE.--Water-stage recorder. Altitude of gage is 4,050 ft (1,234 m), from topographic map. Prior to May 4, 1938, at same site at different datums. May 4, 1938, to Jan. 26, 1939, at site 0.2 mi (0.3 km) downstream (below Punchbowl Canyon) at different datum.

AVERAGE DISCHARGE.--52 years, 15.7 ft^3/s (0.445 m^3/s), 11,370 acre-ft/yr (14.0 hm^3/yr).

EXTREMES.--Current year: Maximum discharge, 31 ft^3/s (0.88 m^3/s) Mar. 6 (gage height, 3.77 ft or 1.149 m); minimum daily, 3.1 ft^3/s (0.088 m^3/s) Aug. 7.
Period of record: Maximum discharge, 8,300 ft^3/s (235 m^3/s) Mar. 2, 1938, on basis of slope-area measurement of maximum flow; minimum daily, 0.70 ft^3/s (0.020 m^3/s) Nov. 5, 1951.

REMARKS.--Records poor. No regulation or diversion above station. Some infiltration into the streambed in the immediate vicinity of station.

COOPERATION.--Fifteen discharge measurements furnished by Los Angeles County Flood Control District.

DISCHARGE, IN CUBIC FEET PER SECOND, WATER YEAR OCTOBER 1974 TO SEPTEMBER 1975
MEAN VALUES

DAY	OCT	NOV	DEC	JAN	FEB	MAR	APR	MAY	JUN	JUL	AUG	SEP
1	4.0	4.9	4.4	5.4	4.0	5.9	12	14	11	7.0	3.7	4.0
2	4.0	4.9	4.4	5.4	4.0	5.9	12	14	11	7.0	3.7	4.0
3	4.0	4.4	4.4	5.4	5.4	5.9	12	15	11	7.0	3.7	4.0
4	4.0	4.4	8.1	5.4	4.9	6.4	12	15	10	7.0	3.7	4.0
5	4.0	4.4	5.2	5.4	4.4	7.6	12	15	10	6.4	3.7	4.0
6	4.0	4.4	4.9	4.9	4.4	17	11	14	10	6.4	3.7	4.0
7	5.4	4.4	4.4	4.9	4.4	12	11	14	9.7	6.4	3.1	4.0
8	5.3	4.0	4.4	4.4	4.4	18	10	14	9.7	6.4	4.0	4.0
9	5.2	4.0	4.4	4.0	4.4	16	11	14	9.7	6.4	4.4	4.0
10	5.1	4.0	4.4	4.0	7.0	14	11	14	8.9	6.4	4.4	4.0
11	4.5	4.0	4.0	4.0	6.4	11	11	15	8.9	6.4	4.4	4.0
12	4.0	4.0	4.0	4.0	6.0	12	11	15	8.9	6.4	4.6	3.7
13	4.0	4.0	4.0	4.0	5.4	12	11	15	8.9	6.4	4.4	3.7
14	4.0	4.0	4.0	3.7	5.4	12	11	16	8.2	5.9	4.4	3.7
15	4.0	4.0	4.0	3.7	5.4	11	11	15	8.2	5.9	4.4	3.7
16	4.0	4.0	4.0	3.7	5.4	11	11	15	8.2	5.9	4.9	3.7
17	3.7	4.0	4.0	3.7	5.4	11	10	14	7.6	6.4	4.9	4.0
18	3.7	4.0	4.0	3.7	5.4	11	9.7	15	7.6	6.4	4.9	4.0
19	4.0	4.4	4.0	3.7	5.4	12	9.7	15	7.6	7.0	5.4	4.0
20	4.0	4.4	4.0	3.7	5.4	13	10	15	8.2	7.0	5.4	3.7
21	4.0	4.4	4.0	3.7	5.4	14	11	14	8.2	6.4	5.4	3.7
22	4.0	4.4	4.4	3.7	5.9	14	13	14	7.6	6.4	5.4	3.7
23	4.0	4.4	4.0	3.7	5.9	14	14	14	7.6	5.9	4.9	3.7
24	4.0	4.4	4.0	3.7	5.9	14	14	14	7.6	5.9	4.9	3.7
25	4.0	4.4	4.0	3.7	5.9	14	14	14	7.0	5.4	4.9	3.7
26	4.0	4.4	4.0	3.7	5.9	15	15	13	7.0	4.9	4.9	3.7
27	4.0	4.4	4.0	4.0	5.9	14	15	13	7.0	4.4	4.4	3.7
28	4.4	4.4	5.4	4.0	5.9	13	15	13	7.0	4.4	4.4	3.7
29	4.4	4.4	5.4	4.0	---	13	14	12	7.0	4.4	4.4	3.7
30	4.9	4.4	4.4	4.0	---	12	14	12	7.0	4.0	4.0	3.7
31	4.9	---	5.9	4.0	---	12	---	12	---	4.0	4.0	---
TOTAL	131.5	128.6	138.5	129.3	149.6	373.7	358.4	438	256.3	186.2	137.4	115.2
MEAN	4.24	4.29	4.47	4.17	5.34	12.1	11.9	14.1	8.54	6.01	4.43	3.84
MAX	5.4	4.9	8.1	5.4	7.0	18	15	16	11	7.0	5.4	4.0
MIN	3.7	4.0	4.0	3.7	4.0	5.9	9.7	12	7.0	4.0	3.1	3.7
AC-FT	261	255	275	256	297	741	711	869	508	369	273	228

CAL YR 1974 TOTAL 3612.2 MEAN 9.90 MAX 30 MIN 3.7 AC-FT 7160
WTR YR 1975 TOTAL 2542.7 MEAN 6.97 MAX 18 MIN 3.1 AC-FT 5040

Peak discharge (base, 50 ft^3/s).--No peak above base.

10263500 BIG ROCK CREEK NEAR VALYERMO, CALIF.--Continued

PERIOD OF RECORD.--Water temperatures: January 1962 to current year.

EXTREMES.--Current year:
Water temperatures: Maximum recorded, 22.0°C July 26, Aug. 5; minimum, 5.0°C Jan. 27.
Period of record:
Water temperatures: Maximum, 24.0°C Aug. 19, 26, 1970, July 15, 31, 1972; minimum, 0.5°C Jan. 4, 1974.

REMARKS.--Equipment malfunction Mar. 11 to Apr. 18.

TEMPERATURE (DEG. C) OF WATER, WATER YEAR OCTOBER 1974 TO SEPTEMBER 1975

	OCTOBER			NOVEMBER			DECEMBER			JANUARY		
DAY	MAX	MIN	MEAN	MAX	MIN	MEAN	MAX	MIN	MEAN	MAX	MIN	MEAN
1	18.0	13.0	16.5	13.0	10.5	11.0	11.0	8.5	9.5	9.0	6.0	7.0
2	18.5	13.5	15.5	12.5	10.5	11.5	11.0	7.5	9.0	9.0	5.5	7.0
3	18.0	12.5	14.5	13.0	9.5	11.0	12.0	9.0	10.0	9.5	5.5	7.0
4	17.5	11.5	14.0	13.0	9.5	11.0	10.5	8.0	9.5	10.5	6.5	8.0
5	16.5	11.5	13.5	12.5	9.0	10.5	11.0	8.0	9.0	10.5	6.5	8.0
6	17.0	11.5	13.5	13.0	9.0	10.5	11.0	7.5	8.5	11.0	7.5	9.0
7	14.0	12.5	13.5	13.0	8.5	10.5	11.0	7.5	9.0	11.5	8.0	9.5
8	17.5	12.5	14.5	12.5	8.5	10.0	10.0	7.5	8.5	11.0	8.0	9.0
9	16.5	10.5	13.0	12.5	8.5	10.0	10.0	6.5	8.0	10.0	7.0	8.0
10	16.0	11.0	13.0	13.0	9.0	10.5	10.5	6.5	8.0	11.0	7.0	8.5
11	16.5	11.0	13.0	13.0	9.0	10.5	11.0	7.5	8.5	10.5	7.0	8.5
12	16.5	11.5	13.5	13.0	9.0	11.0	11.5	8.0	9.5	10.5	7.0	8.0
13	16.5	11.5	13.5	13.5	9.0	11.0	10.5	7.5	9.0	11.0	6.5	8.0
14	16.5	11.0	13.0	13.5	10.0	11.5	10.5	7.5	8.5	11.5	7.0	8.5
15	16.5	11.0	13.0	13.5	9.5	11.0	11.5	7.5	9.5	12.0	7.0	9.0
16	16.5	11.0	13.0	13.0	10.0	11.5	11.5	8.5	9.5	12.5	8.0	9.5
17	16.5	11.5	13.5	13.0	10.0	11.0	11.5	8.0	9.5	12.0	7.5	9.0
18	16.0	11.5	13.5	13.0	9.5	10.5	10.5	7.0	8.5	12.0	7.5	9.0
19	16.0	12.0	13.5	12.5	9.0	10.5	11.0	7.5	9.0	12.0	8.0	9.5
20	16.5	11.5	13.5	12.5	9.0	10.5	11.5	8.0	9.5	11.5	8.0	9.0
21	16.5	11.5	13.5	13.0	10.0	11.0	11.5	8.0	9.0	12.0	8.0	9.5
22	16.0	11.5	13.0	12.0	8.5	10.5	9.5	7.5	8.0	11.0	7.5	8.5
23	15.0	11.5	13.0	11.5	8.0	9.5	8.5	6.0	7.0	11.5	7.0	8.5
24	15.5	11.0	13.0	11.5	7.5	9.0	8.5	6.0	7.0	12.5	7.5	9.5
25	15.5	11.0	13.0	12.0	8.0	9.5	9.0	6.0	7.0	13.0	8.0	10.0
26	14.5	11.5	12.5	11.5	8.0	9.5	10.0	6.5	8.0	13.0	8.5	10.0
27	15.0	11.0	12.5	12.0	8.0	9.5	10.0	7.0	8.0	10.5	5.0	8.0
28	13.0	10.5	12.0	11.0	8.0	9.0	9.0	5.5	7.0	10.5	5.5	7.5
29	12.5	10.0	11.0	11.0	7.5	8.5	9.0	7.0	8.0	10.5	5.5	7.5
30	13.5	10.0	11.5	10.5	7.5	9.0	10.0	6.0	7.5	8.5	6.5	7.0
31	14.0	10.5	11.5	---	---	---	8.0	6.0	7.0	9.5	5.5	7.0
MONTH	18.5	10.0	13.5	13.5	7.5	10.5	12.0	5.5	8.5	13.0	5.0	8.5

	FEBRUARY			MARCH			APRIL			MAY		
DAY	MAX	MIN	MEAN	MAX	MIN	MEAN	MAX	MIN	MEAN	MAX	MIN	MEAN
1	11.0	6.0	8.0	15.0	8.5	11.0	---	---	---	15.5	8.0	11.0
2	11.0	6.0	8.5	15.0	8.0	10.5	---	---	---	16.5	8.5	11.5
3	10.5	7.0	8.0	14.5	8.5	11.0	---	---	---	16.0	8.5	11.5
4	11.5	7.0	8.5	13.5	9.0	11.0	---	---	---	14.0	8.0	10.0
5	12.0	8.0	9.5	10.0	8.0	9.5	---	---	---	14.0	7.0	10.0
6	12.0	7.5	9.0	11.0	7.0	9.0	---	---	---	15.0	7.0	10.5
7	12.0	8.0	9.5	13.0	8.0	10.0	---	---	---	16.0	8.0	11.5
8	13.0	7.5	9.5	9.0	7.5	8.5	---	---	---	16.5	8.5	11.5
9	12.0	7.0	9.5	12.0	7.0	9.0	---	---	---	16.5	8.5	11.5
10	11.5	7.0	8.5	11.0	7.5	9.0	---	---	---	17.0	9.0	12.5
11	12.0	6.0	8.0	---	---	---	---	---	---	17.0	9.0	12.5
12	8.5	7.0	8.0	---	---	---	---	---	---	17.0	9.5	12.5
13	11.0	8.0	9.5	---	---	---	---	---	---	17.5	10.0	13.0
14	10.0	7.5	9.0	---	---	---	---	---	---	17.0	10.0	12.5
15	9.0	7.5	8.0	---	---	---	---	---	---	16.5	9.5	12.5
16	11.5	7.0	8.5	---	---	---	---	---	---	16.5	9.5	12.5
17	8.5	6.5	7.0	---	---	---	---	---	---	16.5	10.0	13.0
18	10.0	6.0	7.5	---	---	---	---	---	---	16.5	11.0	13.0
19	12.0	6.5	8.5	---	---	---	16.0	7.0	10.5	17.5	10.5	13.5
20	12.5	8.0	9.5	---	---	---	16.0	7.5	11.0	12.0	9.0	10.5
21	10.5	6.5	8.0	---	---	---	16.0	8.0	11.5	15.5	8.0	11.0
22	11.5	6.0	8.0	---	---	---	15.5	7.5	11.0	16.0	9.0	12.0
23	13.0	7.0	9.0	---	---	---	15.0	8.0	10.5	17.5	10.0	13.0
24	13.5	7.5	9.5	---	---	---	16.0	8.0	11.0	18.0	10.5	13.5
25	14.0	8.0	10.0	---	---	---	12.0	7.5	9.0	18.5	10.5	13.5
26	14.5	8.0	10.5	---	---	---	13.0	7.0	9.0	18.5	11.0	14.0
27	14.0	8.5	10.5	---	---	---	15.0	6.5	10.0	18.0	11.0	14.0
28	15.5	9.0	11.0	---	---	---	16.0	7.5	10.5	18.0	11.0	13.5
29	---	---	---	---	---	---	15.5	7.5	10.5	18.0	11.0	13.5
30	---	---	---	---	---	---	15.0	8.0	11.0	19.0	11.0	14.0
31	---	---	---	---	---	---	---	---	---	19.5	11.5	14.5
MONTH	15.5	6.0	9.0	---	---	---	---	---	---	19.5	7.0	12.5

10263500 BIG ROCK CREEK NEAR VALYERMO, CALIF.--Continued

TEMPERATURE (DEG. C) OF WATER, WATER YEAR OCTOBER 1974 TO SEPTEMBER 1975

	JUNE			JULY			AUGUST			SEPTEMBER		
DAY	MAX	MIN	MEAN	MAX	MIN	MEAN	MAX	MIN	MEAN	MAX	MIN	MEAN
1	19.5	11.5	14.5	19.5	11.5	15.0	20.5	13.0	16.0	19.0	13.0	15.5
2	19.0	11.5	14.5	19.5	11.5	15.0	21.0	13.5	16.5	19.0	12.0	15.0
3	16.5	11.0	13.5	19.5	11.5	15.0	21.0	13.5	17.0	19.5	13.0	16.0
4	19.0	11.5	14.5	20.0	12.5	15.5	21.5	14.5	17.5	19.5	14.0	16.0
5	18.5	12.0	14.5	20.5	13.0	16.0	22.0	15.0	17.5	19.5	14.0	16.5
6	18.5	12.0	14.5	21.0	13.5	16.5	21.5	14.5	17.5	19.0	14.0	16.0
7	19.5	12.0	15.0	21.0	13.5	16.5	21.5	14.5	17.0	19.0	14.0	16.0
8	19.5	12.0	15.0	18.5	14.0	16.0	21.5	14.5	17.0	16.5	14.5	15.5
9	20.0	12.0	15.0	20.5	14.0	16.5	20.0	14.5	17.0	17.5	14.0	15.5
10	19.5	12.0	15.0	20.0	14.5	17.0	20.5	14.5	16.5	17.5	13.5	15.0
11	20.0	12.0	15.0	21.5	14.0	17.0	20.5	14.5	16.5	18.0	13.0	15.0
12	20.0	12.0	15.0	21.0	14.0	16.5	20.0	13.5	16.0	18.0	13.0	15.0
13	20.5	12.5	15.5	20.0	13.0	16.0	20.0	12.5	15.5	18.0	13.0	15.0
14	20.5	12.5	16.0	20.5	12.5	16.0	19.5	12.5	15.5	18.0	13.5	15.5
15	20.5	12.5	16.0	20.0	12.5	16.0	19.5	13.0	15.5	17.0	13.5	15.0
16	20.0	12.5	15.5	20.5	12.5	16.0	19.5	13.0	16.0	17.0	14.5	15.5
17	19.5	12.0	15.0	21.0	14.0	16.5	19.5	13.0	16.0	19.0	14.0	16.0
18	18.5	11.5	14.0	21.0	13.5	16.5	19.0	13.5	15.5	19.0	14.0	16.0
19	18.5	11.0	14.0	20.5	13.0	16.0	19.5	13.5	15.5	18.5	13.5	15.5
20	19.0	11.5	14.5	20.5	13.0	16.0	19.0	12.5	15.0	18.0	13.5	15.5
21	19.5	12.0	15.0	21.0	13.0	16.5	19.0	12.0	15.0	17.5	13.0	15.0
22	19.5	12.0	15.0	21.0	13.0	16.0	19.0	12.5	15.0	17.5	12.5	14.5
23	18.0	12.0	14.5	21.0	13.0	16.5	19.0	12.5	15.0	17.5	12.0	14.5
24	18.5	11.5	14.5	21.5	14.0	17.0	19.5	12.0	15.5	17.0	12.0	14.5
25	18.5	11.0	14.0	21.5	14.0	17.0	19.5	12.5	15.5	17.0	12.0	14.0
26	19.5	11.0	14.5	22.0	14.0	17.0	18.5	12.0	15.0	17.0	12.5	14.5
27	19.5	11.5	15.0	21.5	15.0	17.5	19.0	13.0	15.5	17.0	12.5	14.5
28	19.5	11.5	15.0	20.5	15.0	16.5	19.0	12.5	15.5	17.0	12.0	14.0
29	20.0	12.0	15.0	21.0	15.0	17.0	19.0	12.0	15.0	16.5	12.0	14.0
30	19.5	11.5	15.0	20.0	14.0	16.0	19.0	12.0	15.0	16.0	12.0	14.0
31	---	---	---	20.0	12.0	15.5	19.0	12.5	15.0	---	---	---
MONTH	20.5	11.0	15.0	22.0	11.5	16.5	22.0	12.0	16.0	19.5	12.0	15.0

10264000 LITTLE ROCK CREEK NEAR LITTLE ROCK, CALIF.

LOCATION.--Lat 34°27'47", long 118°01'04", in SW¼SW¼NE¼ sec.3, T.4 N., R.11 W., Los Angeles County, on right bank 0.3 mi (0.5 km) upstream from Santiago Creek, 1.6 mi (2.6 km) upstream from Little Rock Palmdale Irrigation District's dam, and 5 mi (8 km) south of Little Rock.

DRAINAGE AREA.--49.0 mi^2 (126.9 km^2).

PERIOD OF RECORD.--October 1930 to February 1938, May to September 1938, April 1939 to current year.

GAGE.--Water-stage recorder. Altitude of gage is 3,290 ft (1,003 m), from topographic map. Prior to May 1943, at site 500 ft (152 m) downstream at different datums (datum changed in March 1939).

AVERAGE DISCHARGE.--43 years (1930-37, 1939-75), 16.3 ft^3/s (0.462 m^3/s), 11,810 acre-ft/yr (14.6 hm^3/yr).

EXTREMES.--Current year: Maximum discharge, 230 ft^3/s (6.51 m^3/s) Mar. 8 (gage height, 6.92 ft or 2.109 m); no flow many days.
Period of record: Maximum discharge, 17,000 ft^3/s (481 m^3/s), estimated, Mar. 2, 1938; no flow at times in most years.

REMARKS.--Records poor. No regulation or diversion above station.

COOPERATION.--Records furnished by Los Angeles County Flood Control District.

DISCHARGE, IN CUBIC FEET PER SECOND, WATER YEAR OCTOBER 1974 TO SEPTEMBER 1975
MEAN VALUES

DAY	OCT	NOV	DEC	JAN	FEB	MAR	APR	MAY	JUN	JUL	AUG	SEP
1	0	.50	.80	2.1	2.9	4.9	17	35	6.7	1.2		
2	0	.70	.80	2.1	2.9	4.9	16	34	6.4	1.2		
3	0	.70	.80	2.3	5.7	4.9	17	35	6.4	1.2		
4	0	.70	29	2.3	5.7	4.9	17	37	6.1	.90		
5	0	.70	16	2.5	5.2	6.4	18	33	5.7	.80		
6	0	.70	9.8	2.7	5.4	35	19	30	5.4	.70		
7	.20	.70	6.7	3.2	5.7	45	17	27	5.2	.60		
8	2.0	.70	5.4	3.6	6.1	124	17	27	4.9	.50		
9	1.0	.60	4.4	3.9	11	64	22	26	4.4	.50		
10	.60	.60	3.6	3.9	20	37	22	25	4.2	.40		
11	.40	.50	2.9	3.6	15	27	22	25	3.9	.40		
12	.20	.50	2.3	3.4	12	22	22	27	3.6	.20		
13	.10	.50	2.1	3.4	11	19	23	27	3.6	.20		
14	0	.50	2.1	3.4	11	19	31	25	3.2	.10		
15	0	.50	2.1	3.4	9.8	16	30	22	2.9	.10		
16	0	.50	1.8	3.4	9.1	17	28	20	2.9	.20		
17	0	.60	1.8	3.2	8.0	16	27	19	2.7	.20		
18	0	.60	1.6	3.2	7.4	17	24	17	2.7	.30		
19	0	.60	1.6	2.9	6.4	24	24	17	2.7	.30		
20	0	.60	1.6	3.2	6.4	35	27	16	2.9	.10		
21	0	.70	1.6	2.9	6.1	33	32	14	2.7	.10		
22	0	.70	1.6	2.9	5.4	36	37	14	2.5	0		
23	0	.70	1.2	2.9	4.9	30	38	12	2.1	0		
24	0	.70	.70	2.9	4.6	28	39	11	2.1	0		
25	0	.70	.70	2.7	4.6	36	42	10	2.1	0		
26	0	.80	.90	2.7	4.6	33	38	9.5	1.8	0		
27	0	.80	1.4	2.9	4.6	30	33	8.7	1.6	0		
28	0	.80	1.8	2.9	4.6	27	32	8.4	1.6	0		
29	.10	.80	2.0	2.9	---	24	34	7.7	1.4	0		
30	.10	.80	2.0	2.9	---	21	34	7.4	1.4	0		
31	.40	---	2.1	2.9	---	18	---	7.0	---	0		---
TOTAL	5.10	19.50	113.20	93.2	206.1	859.0	799	633.7	105.8	10.20	0	0
MEAN	.16	.65	3.65	3.01	7.36	27.7	26.6	20.4	3.53	.33	0	0
MAX	2.0	.80	29	3.9	20	124	42	37	6.7	1.2	0	0
MIN	0	.50	.70	2.1	2.9	4.9	16	7.0	1.4	0	0	0
AC-FT	10	39	225	185	409	1700	1580	1260	210	20	0	0

CAL YR 1974 TOTAL 3802.90 MEAN 10.4 MAX 70 MIN 0 AC-FT 7540
WTR YR 1975 TOTAL 2844.80 MEAN 7.79 MAX 124 MIN 0 AC-FT 5640

10264600 OAK CREEK NEAR MOJAVE, CALIF.

LOCATION.--Lat 35°03'00", long 118°21'25", in NW¼ sec.15, T.11 N., R.14 W., Kern County, on upstream right wingwall of culvert, 100 ft (30 m) downstream from unnamed tributary, 0.1 mi (0.2 km) west of junction of Oak Creek and Willow Springs Roads, and 10.5 mi (16.9 km) west of Mojave.

DRAINAGE AREA.--15.8 mi^2 (40.9 km^2).

PERIOD OF RECORD.--August 1957 to current year.

GAGE.--Water-stage recorder and concrete control. Altitude of gage is 4,100 ft (1,250 m), from topographic map.

AVERAGE DISCHARGE.--18 years, 0.71 ft^3/s (0.0201 m^3/s), 514 acre-ft/yr (634,000 m^3/yr).

EXTREMES.--Current year: Maximum discharge, 9.8 ft^3/s (0.28 m^3/s) occurred between Feb. 11 and 20 (gage height, 2.42 ft or 0.738 m); no flow many days.
Period of record: Maximum discharge, 1,740 ft^3/s (49.3 m^3/s) May 14, 1973, by slope-area measurement, caused by failure of small earthen dam 4 mi (6.4 km) upstream during intense local thunderstorm; maximum gage height, 10.53 ft (3.210 m) May 14, 1973, ponding at culvert 0.1 mi (0.2 km) downstream; no flow for some months in most years.

REMARKS.--Records fair below 1 ft^3/s (0.028 m^3/s) and poor above. No regulation or diversion above station.

DISCHARGE, IN CUBIC FEET PER SECOND, WATER YEAR OCTOBER 1974 TO SEPTEMBER 1975
MEAN VALUES

DAY	OCT	NOV	DEC	JAN	FEB	MAR	APR	MAY	JUN	JUL	AUG	SEP
1	.03	0	0	.27	.16	.42	.37	.30	.35	.09	.01	.02
2	.03	0	0	.21	.17	.46	.38	.29	.33	.09	.01	.02
3	.03	0	0	.19	.18	.40	.37	.30	.32	.09	.01	.02
4	.03	0	1.1	.27	.16	.51	.38	.30	.30	.08	.01	.02
5	.03	0	.46	.28	.16	.59	.43	.26	.28	.07	.01	.02
6	.03	0	.14	.18	.16	.52	.32	.26	.27	.06	.01	.02
7	.21	0	.17	.25	.14	.39	.33	.26	.26	.07	.01	.02
8	.04	0	.16	.23	.13	.40	.32	.23	.24	.08	.01	.01
9	.03	0	.09	.31	.13	.39	.34	.22	.22	.07	.01	.01
10	.03	0	.09	.31	.11	.41	.33	.22	.21	.07	.01	.01
11	.03	2.3	.08	.29	.53	.46	.32	.20	.20	.07	.01	.01
12	.03	1.0	.08	.28	.18	.47	.34	.20	.18	.07	.01	.02
13	.03	.30	.14	.18	.16	.42	.34	.19	.17	.07	.01	.02
14	.03	.20	.19	.28	.22	.31	.34	.19	.16	.07	.01	.02
15	.03	.20	.20	.13	.19	.32	.34	.19	.15	.07	.01	.02
16	.03	.20	.09	.21	.22	.33	.35	.20	.14	.06	.01	.02
17	.03	.20	.15	.12	.24	.24	.36	.17	.14	.07	.01	.01
18	.03	.20	.11	.18	.17	.22	.40	.19	.14	.06	.02	.01
19	.03	.28	.11	.19	.17	.33	.43	.16	.13	.03	.02	.01
20	.03	.15	.19	.10	.28	.34	.37	1.4	.13	.03	.02	.01
21	.04	.05	.21	.10	.30	.25	.37	.74	.11	.03	.02	.01
22	.05	.08	.22	.20	.33	.35	.36	.63	.11	.02	.02	.01
23	.10	.02	.17	.13	.35	.35	.35	.57	.11	.02	.02	.01
24	0	.01	.20	.13	.26	.24	.35	.55	.11	.02	.02	.01
25	0	0	.21	.18	.21	.35	.36	.52	.11	.02	.02	.01
26	0	0	.15	.19	.36	.35	.33	.48	.10	.01	.02	.01
27	0	0	.15	.12	.31	.35	.32	.47	.10	.01	.02	.01
28	0	0	.25	.18	.36	.33	.32	.44	.09	.01	.03	.01
29	0	0	.24	.11	---	.34	.30	.42	.09	.01	.02	.01
30	0	0	.24	.17	---	.37	.30	.39	.09	.01	.02	.01
31	0	---	.24	.14	---	.37	---	.37	---	.01	.02	---
TOTAL	.98	5.19	5.83	6.11	6.34	11.58	10.52	11.31	5.34	1.54	.46	.42
MEAN	.032	.17	.19	.20	.23	.37	.35	.36	.18	.050	.015	.014
MAX	.21	2.3	1.1	.31	.53	.59	.43	1.4	.35	.09	.03	.02
MIN	0	0	0	.10	.11	.22	.30	.16	.09	.01	.01	.01
AC-FT	1.9	10	12	12	13	23	21	22	11	3.1	.9	.8

CAL YR 1974 TOTAL 148.49 MEAN .41 MAX 2.3 MIN 0 AC-FT 295
WTR YR 1975 TOTAL 65.62 MEAN .18 MAX 2.3 MIN 0 AC-FT 130

Peak discharge (base, 10 ft^3/s).--No peak above base.

10264750 PINE TREE CREEK NEAR MOJAVE, CALIF.

LOCATION.--Lat 35°13'50", long 118°05'07", in SW¼NW¼SE¼ sec.14, T.31 S., R.36 E., Kern County, on downstream side of city of Los Angeles aqueduct-siphon pier near right bank, 0.5 mi (0.8 km) downstream from unnamed tributary, and 13 mi (21 km) northeast of Mojave.

DRAINAGE AREA.--33.5 mi^2 (86.8 km^2).

PERIOD OF RECORD.--July 1958 to current year.

GAGE.--Water-stage recorder with rain-gage attachment. Altitude of gage is 2,700 ft (823 m), from topographic map. Prior to Oct. 1, 1961, at datum 3.0 ft (0.9 m) higher.

AVERAGE DISCHARGE.--17 years, 0.21 ft^3/s (0.0059 m^3/s), 152 acre-ft/yr (187,000 m^3/yr).

EXTREMES.--Current year: Maximum discharge, 4,900 ft^3/s (139 m^3/s) Oct. 7 (gage height, unknown), on basis of slope-area measurement of maximum flow; no flow most of year.
Period of record: Maximum discharge, 30,000 ft^3/s (850 m^3/s) Aug. 23, 1961, on basis of field estimate of maximum flow; no flow most of each year.

REMARKS.--Records fair. No regulation or diversion above station.

DISCHARGE, IN CUBIC FEET PER SECOND, WATER YEAR OCTOBER 1974 TO SEPTEMBER 1975
MEAN VALUES

DAY	OCT	NOV	DEC	JAN	FEB	MAR	APR	MAY	JUN	JUL	AUG	SEP
1	0		0			0						0
2	0		0			0						0
3	0		0			0						0
4	0		.06			0						.06
5	0		0			0						0
6	0		0			0						0
7	204		0			0						0
8	0		0			.08						0
9	0		0			0						0
10	0		0			0						0
11	0		0			0						0
12	0		0			0						0
13	0		0			0						0
14	0		0			0						0
15	0		0			0						0
16	0		0			0						0
17	0		0			0						0
18	0		0			0						0
19	0		0			0						0
20	0		0			0						0
21	0		0			0						0
22	0		0			0						0
23	0		0			0						0
24	0		0			0						0
25	0		0			0						0
26	0		0			0						0
27	0		0			0						0
28	0		0			0						0
29	.01		0		---	0						0
30	0		0		---	0						0
31	0	---	0		---	0	---		---			---
TOTAL	204.01	0	.06	0	0	.08	0	0	0	0	0	.06
MEAN	6.58	0	.002	0	0	.003	0	0	0	0	0	.002
MAX	204	0	.06	0	0	.08	0	0	0	0	0	.06
MIN	0	0	0	0	0	0	0	0	0	0	0	0
AC-FT	405	0	.1	0	0	.2	0	0	0	0	0	.1
(a)	.6	0	.3	0	0	.2	0	0	0	.1	.1	2.2

CAL YR 1974 TOTAL 204.07 MEAN .56 MAX 204 MIN 0 AC-FT 405
WTR YR 1975 TOTAL 204.21 MEAN .56 MAX 204 MIN 0 AC-FT 405

a Precipitation, in inches.

10265200 CONVICT CREEK NEAR MAMMOTH LAKES, CALIF.

LOCATION.--Lat 37°36'26", long 118°50'52", in NE¼NE¼ sec.14, T.4 S., R.28 E., Mono County, on right bank 1.1 mi (1.8 km) downstream from Convict Lake, 2.0 mi (3.2 km) upstream from U.S. Highway 395, and 7.0 mi (11.2 km) southeast of Mammoth Lakes (Ranger Station).

DRAINAGE AREA.--18.2 mi^2 (47.1 km^2).

PERIOD OF RECORD.--July 1925 to current year. Prior to October 1959 monthly discharge only, published in WSP 1314 and 1734.

GAGE.--Water-stage recorder and wood control. Altitude of gage is 7,450 ft (2,271 m), from topographic map. Prior to Nov. 15, 1926, nonrecording gage at same site and datum.

AVERAGE DISCHARGE.--50 years, 24.6 ft^3/s (0.697 m^3/s), 17,820 acre-ft/yr (22.0 hm^3/yr).

EXTREMES.--Current year: Maximum daily discharge, 167 ft^3/s (4.73 m^3/s) June 17; minimum daily, 7.9 ft^3/s (0.224 m^3/s) Apr. 25.
Period of record: Maximum discharge, 290 ft^3/s (8.21 m^3/s) June 29, 1932 (gage height, 4.43 ft or 1.350 m); minimum daily, 1.0 ft^3/s (0.028 m^3/s) Sept. 20-22, 1974.

REMARKS.--Records poor. Some regulation by Convict Lake above station. No diversion above station.

COOPERATION.--Records furnished by city of Los Angeles, Department of Water and Power.

DISCHARGE, IN CUBIC FEET PER SECOND, WATER YEAR OCTOBER 1974 TO SEPTEMBER 1975
MEAN VALUES

DAY	OCT	NOV	DEC	JAN	FEB	MAR	APR	MAY	JUN	JUL	AUG	SEP
1	21	14	12	11	9.6	9.6	13	12	55	69	41	20
2	20	14	12	11	12	9.4	13	11	63	69	40	19
3	20	14	12	11	13	9.4	12	12	74	69	39	18
4	20	14	13	9.0	13	9.6	11	12	79	69	37	18
5	19	14	13	9.0	12	9.8	13	12	87	69	35	18
6	18	14	12	10	11	10	13	12	103	70	34	18
7	18	14	12	10	11	11	13	12	120	70	33	18
8	18	13	12	10	12	11	13	12	118	71	32	17
9	17	13	12	10	14	11	12	12	118	82	31	20
10	17	13	12	10	14	11	12	13	116	95	30	21
11	16	13	12	12	14	11	12	13	114	97	30	21
12	16	13	12	12	14	11	12	15	116	97	30	22
13	16	13	12	12	13	11	12	17	123	96	29	22
14	15	13	12	12	12	11	12	20	127	93	29	21
15	15	13	12	12	12	11	12	22	137	86	29	21
16	14	13	12	12	13	11	11	25	156	77	28	21
17	14	13	12	12	13	11	11	28	167	71	28	21
18	15	13	12	12	11	11	10	29	151	67	27	21
19	16	13	12	12	11	11	10	33	126	65	29	20
20	15	13	12	12	11	11	10	34	102	62	31	20
21	14	13	12	12	9.6	10	10	35	84	60	31	19
22	14	13	12	12	9.6	11	10	35	73	58	30	19
23	14	13	11	12	9.6	11	10	34	71	57	29	18
24	14	13	11	12	9.6	11	10	33	69	56	28	18
25	14	13	11	12	9.6	11	7.9	34	69	54	27	18
26	14	12	11	10	9.0	12	10	35	69	53	26	18
27	14	12	11	10	9.0	12	10	38	68	51	24	18
28	14	12	12	9.0	9.0	12	10	41	68	49	23	18
29	14	12	12	9.0	---	12	10	44	68	46	21	17
30	14	12	12	10	---	11	11	46	68	44	21	15
31	14	---	12	10	---	11	---	47	---	43	21	---
TOTAL	494	392	369	339.0	320.6	335.8	335.9	778	2959	2115	923	575
MEAN	15.9	13.1	11.9	10.9	11.5	10.8	11.2	25.1	98.6	68.2	29.8	19.2
MAX	21	14	13	12	14	12	13	47	167	97	41	22
MIN	14	12	11	9.0	9.0	9.4	7.9	11	55	43	21	15
AC-FT	980	778	732	672	636	666	666	1540	5870	4200	1830	1140

CAL YR 1974 TOTAL 11273.0 MEAN 30.9 MAX 140 MIN 1.0 AC-FT 22360
WTR YR 1975 TOTAL 9936.3 MEAN 27.2 MAX 167 MIN 7.9 AC-FT 19710

10265700 ROCK CREEK AT LITTLE ROUND VALLEY, NEAR BISHOP, CALIF.

LOCATION.--Lat 37°33'15", long 118°41'03", in SE¼SE¼ sec.32, T.4 S., R.30 E., Mono County, on right bank just upstream from diversion to Little Round Valley, 0.6 mi (1.0 km) south of Toms Place, and 20 mi (32 km) northwest of Bishop.

DRAINAGE AREA.--35.8 mi^2 (92.7 km^2).

PERIOD OF RECORD.--January to December 1918, January 1920 to current year. Prior to October 1959 monthly discharge only, published in WSP 1314 and 1734.

GAGE.--Water-stage recorder. Parshall flume since May 1953. Altitude of gage is 7,280 ft (2,220 m), from topographic map. See WSP 1734 for history of changes prior to May 28, 1953.

AVERAGE DISCHARGE.--55 years (1920-75), 29.7 ft^3/s (0.841 m^3/s), 21,520 acre-ft/yr (26.5 hm^3/yr).

EXTREMES.--Current year: Maximum daily discharge, 138 ft^3/s (3.91 m^3/s) June 7, 8; minimum daily, 9.3 ft^3/s (0.26 m^3/s) Dec. 16, 17.
Period of record (1926 to current year): Maximum discharge, 312 ft^3/s (8.84 m^3/s) May 30, 1969 (gage height, 5.00 ft or 1.524 m); minimum daily, 2.2 ft^3/s (0.062 m^3/s) Nov. 30, 1971.

REMARKS.--Records poor. No regulation or diversion above station.

COOPERATION.--Records furnished by city of Los Angeles, Department of Water and Power.

DISCHARGE, IN CUBIC FEET PER SECOND, WATER YEAR OCTOBER 1974 TO SEPTEMBER 1975
MEAN VALUES

DAY	OCT	NOV	DEC	JAN	FEB	MAR	APR	MAY	JUN	JUL	AUG	SEP
1	13	13	11	12	13	10	13	12	104	45	23	14
2	14	13	11	12	13	9.5	13	12	114	46	21	14
3	14	12	12	12	13	9.8	12	12	117	45	19	14
4	14	13	13	11	12	9.8	11	12	120	43	18	14
5	14	13	14	11	12	10	12	12	113	42	17	14
6	14	12	14	11	12	10	14	12	124	45	17	14
7	14	12	13	11	11	10	15	12	138	53	17	14
8	14	12	14	11	10	11	13	13	138	59	20	13
9	14	12	14	12	11	11	12	14	130	62	21	18
10	14	12	14	12	11	11	12	16	122	65	21	22
11	14	12	13	12	11	11	12	18	120	70	21	25
12	14	12	11	12	11	11	12	21	118	77	21	26
13	13	12	10	12	10	10	12	26	117	78	21	26
14	13	12	10	11	10	11	12	30	118	70	20	25
15	13	12	9.5	11	12	12	11	34	119	58	20	23
16	13	12	9.3	11	11	11	11	38	122	49	20	21
17	13	12	9.3	11	12	14	11	43	116	42	20	20
18	13	12	11	11	12	12	10	50	55	38	20	20
19	13	11	9.8	10	10	12	10	61	44	37	21	18
20	12	11	9.5	11	10	11	10	60	47	37	22	18
21	12	12	9.5	10	11	11	11	50	46	38	23	17
22	12	12	12	10	14	11	11	42	46	36	22	17
23	12	13	12	10	9.5	16	11	38	46	35	21	16
24	12	12	12	10	9.8	12	12	43	46	33	19	16
25	12	11	12	10	9.8	12	12	53	46	32	18	16
26	12	11	12	10	9.8	14	12	64	46	33	18	15
27	12	11	12	11	9.8	22	11	76	46	33	17	15
28	12	11	12	11	9.8	32	12	83	46	31	16	14
29	12	13	12	11	---	23	12	83	46	26	16	14
30	13	14	12	13	---	14	12	83	46	27	15	14
31	13	---	12	13	---	12	---	89	---	25	15	---
TOTAL	404	362	361.9	346	310.5	396.1	354	1212	2656	1410	600	527
MEAN	13.0	12.1	11.7	11.2	11.1	12.8	11.8	39.1	88.5	45.5	19.4	17.6
MAX	14	14	14	13	14	32	15	89	138	78	23	26
MIN	12	11	9.3	10	9.5	9.5	10	12	44	25	15	13
AC-FT	801	718	718	686	616	786	702	2400	5270	2800	1190	1050

CAL YR 1974 TOTAL 12348.9 MEAN 33.8 MAX 169 MIN 8.7 AC-FT 24490
WTR YR 1975 TOTAL 8939.5 MEAN 24.5 MAX 138 MIN 9.3 AC-FT 17730

10267000 PINE CREEK AT DIVISION BOX, NEAR BISHOP, CALIF.

LOCATION.--Lat 37°24'59", long 118°37'15", in SE¼NW¼ sec.19, T.6 S., R.31 E., Inyo County, on right bank 0.2 mi (0.3 km) upstream from division box (at Rovana), 1.9 mi (3.1 km) west of Round Valley schoolhouse, and 13 mi (21 km) northwest of Bishop.

DRAINAGE AREA.--36.4 mi^2 (94.3 km^2).

PERIOD OF RECORD.--October 1921 to current year. Prior to October 1959 monthly discharge only, published in WSP 1314 and 1734.

GAGE.--Water-stage recorder. Parshall flume since November 1938. Altitude of gage is 5,280 ft (1,609 m), from topographic map.

AVERAGE DISCHARGE.--54 years, 45.4 ft^3/s (1.286 m^3/s), 32,890 acre-ft/yr (40.6 hm^3/yr).

EXTREMES.--Current year: Maximum daily discharge, 234 ft^3/s (6.63 m^3/s) June 7; minimum daily, 20 ft^3/s (0.57 m^3/s) on many days.
Period of record: Maximum discharge, 509 ft^3/s (14.4 m^3/s) July 2, 1967 (gage height, 6.05 ft or 1.844 m); minimum daily, 10 ft^3/s (0.28 m^3/s) Jan. 8, 1930, Jan. 21, 1935.

REMARKS.--Records poor. No regulation or diversion above station.

COOPERATION.--Records furnished by city of Los Angeles, Department of Water and Power.

DISCHARGE, IN CUBIC FEET PER SECOND, WATER YEAR OCTOBER 1974 TO SEPTEMBER 1975
MEAN VALUES

DAY	OCT	NOV	DEC	JAN	FEB	MAR	APR	MAY	JUN	JUL	AUG	SEP
1	28	25	22	22	20	20	20	20	193	100	49	32
2	28	25	22	22	21	20	20	20	192	96	47	30
3	28	25	24	22	21	20	20	21	192	94	46	30
4	28	25	24	22	20	20	20	21	188	94	45	30
5	27	24	23	22	20	21	21	21	188	106	44	30
6	27	24	23	21	20	20	21	21	216	122	41	29
7	27	24	23	22	61	20	21	21	234	127	40	29
8	27	24	22	22	41	20	21	22	215	125	39	30
9	27	24	22	21	21	20	21	22	210	122	39	35
10	27	24	22	21	21	20	21	24	196	129	41	43
11	26	24	22	21	21	20	21	27	191	139	38	49
12	26	23	22	22	20	20	21	33	199	135	36	47
13	26	23	22	22	20	20	21	40	198	124	35	42
14	26	24	23	21	20	20	20	50	210	107	35	37
15	25	23	22	21	20	20	20	65	219	94	35	34
16	25	23	22	21	20	20	20	71	223	80	34	33
17	25	23	22	21	20	20	20	80	189	75	33	33
18	25	23	21	20	20	20	20	96	138	77	33	32
19	25	23	21	20	20	20	20	116	103	79	35	32
20	25	23	22	20	20	20	20	104	89	80	38	32
21	25	23	21	21	20	21	20	74	81	76	38	32
22	25	23	21	20	20	21	20	60	96	72	38	32
23	24	23	21	21	20	20	20	59	109	71	36	32
24	24	23	21	20	20	20	20	84	102	69	33	30
25	24	23	21	21	20	21	20	115	83	66	32	29
26	24	23	21	20	20	20	20	129	80	66	32	29
27	24	22	21	20	20	20	20	131	91	63	31	28
28	25	22	22	20	20	20	20	135	94	61	30	28
29	25	22	23	20	---	20	20	128	100	59	31	27
30	24	22	23	20	---	20	20	137	103	55	33	27
31	24	---	22	20	---	20	---	168	---	52	33	---
TOTAL	796	702	683	649	627	624	609	2115	4722	2815	1150	983
MEAN	25.7	23.4	22.0	20.9	22.4	20.1	20.3	68.2	157	90.8	37.1	32.8
MAX	28	25	24	22	61	21	21	168	234	139	49	49
MIN	24	22	21	20	20	20	20	20	80	52	30	27
AC-FT	1580	1390	1350	1290	1240	1240	1210	4200	9370	5580	2280	1950

CAL YR 1974 TOTAL 21031 MEAN 57.6 MAX 282 MIN 21 AC-FT 41710
WTR YR 1975 TOTAL 16475 MEAN 45.1 MAX 234 MIN 20 AC-FT 32680

10268700 SILVER CANYON CREEK NEAR LAWS, CALIF.

LOCATION.--Lat 37°24'28", long 118°16'43", in Inyo National Forest, Inyo County, on right bank 1.7 mi (2.7 km) upstream from mouth of canyon, 3.7 mi (6.0 km) east of Laws.

DRAINAGE AREA.--19.7 mi^2 (51.0 km^2).

PERIOD OF RECORD.--March 1930 to current year. Prior to October 1959 monthly discharge only, published in WSP 1314 and 1734.

GAGE.--Water-stage recorder and Parshall flume. Altitude of gage is 5,120 ft (1,560 m), from topographic map. Feb. 24, 1943, to Sept. 30, 1972, at site 1.7 mi (2.7 km) downstream at different datum. Prior to Feb. 24, 1943, nonrecording gage and Cipolletti weir at site 3.2 mi (5.1 km) downstream at different datum.

AVERAGE DISCHARGE.--45 years, 1.65 ft^3/s (0.0467 m^3/s), 1,200 acre-ft/yr (1.48 hm^3/yr).

EXTREMES.--Current year: Maximum daily discharge, 1.8 ft^3/s (0.051 m^3/s) Nov. 22 to Dec. 18, Jan. 1-5, Feb. 26 to Mar. 13; minimum daily, 1.5 ft^3/s (0.042 m^3/s) many days.
Period of record: Maximum discharge, 9.6 ft^3/s (0.272 m^3/s) June 16, 1969 (gage height, 1.65 ft or 0.503 m, site and datum then in use); no flow at times in some years.

REMARKS.--Records poor. No regulation; occasional diversion above station.

COOPERATION.--Records furnished by city of Los Angeles, Department of Water and Power.

DISCHARGE, IN CUBIC FEET PER SECOND, WATER YEAR OCTOBER 1974 TO SEPTEMBER 1975
MEAN VALUES

DAY	OCT	NOV	DEC	JAN	FEB	MAR	APR	MAY	JUN	JUL	AUG	SEP
1	1.5	1.7	1.8	1.8	1.7	1.8	1.5	1.5	1.6	1.7	1.6	1.6
2	1.6	1.7	1.8	1.8	1.7	1.8	1.5	1.5	1.6	1.7	1.6	1.6
3	1.6	1.7	1.8	1.8	1.7	1.8	1.5	1.6	1.6	1.7	1.6	1.6
4	1.6	1.7	1.8	1.8	1.7	1.8	1.5	1.6	1.6	1.7	1.6	1.6
5	1.6	1.7	1.8	1.8	1.7	1.8	1.5	1.6	1.6	1.7	1.6	1.6
6	1.6	1.7	1.8	1.7	1.7	1.8	1.5	1.6	1.6	1.7	1.6	1.6
7	1.6	1.7	1.8	1.7	1.7	1.8	1.5	1.6	1.6	1.7	1.6	1.6
8	1.6	1.7	1.8	1.7	1.6	1.8	1.5	1.6	1.6	1.7	1.6	1.7
9	1.6	1.7	1.8	1.7	1.6	1.8	1.5	1.6	1.6	1.6	1.6	1.7
10	1.6	1.7	1.8	1.7	1.6	1.8	1.5	1.6	1.6	1.6	1.6	1.7
11	1.6	1.7	1.8	1.7	1.6	1.8	1.5	1.6	1.6	1.6	1.6	1.7
12	1.6	1.7	1.8	1.7	1.6	1.8	1.5	1.6	1.5	1.6	1.6	1.7
13	1.6	1.7	1.8	1.7	1.6	1.8	1.5	1.6	1.5	1.6	1.5	1.7
14	1.6	1.7	1.8	1.7	1.6	1.7	1.5	1.6	1.5	1.6	1.5	1.7
15	1.6	1.7	1.8	1.7	1.7	1.7	1.5	1.6	1.5	1.6	1.5	1.7
16	1.6	1.7	1.8	1.7	1.7	1.7	1.5	1.6	1.5	1.6	1.5	1.7
17	1.6	1.7	1.8	1.7	1.7	1.7	1.5	1.6	1.5	1.6	1.5	1.7
18	1.6	1.7	1.8	1.7	1.7	1.7	1.5	1.6	1.5	1.6	1.5	1.7
19	1.6	1.7	1.7	1.7	1.7	1.7	1.5	1.7	1.5	1.6	1.6	1.7
20	1.6	1.7	1.7	1.7	1.7	1.7	1.5	1.7	1.5	1.6	1.6	1.7
21	1.6	1.7	1.7	1.7	1.7	1.7	1.5	1.7	1.5	1.6	1.6	1.7
22	1.6	1.8	1.7	1.7	1.7	1.7	1.5	1.7	1.5	1.6	1.6	1.7
23	1.6	1.8	1.7	1.7	1.7	1.7	1.5	1.7	1.5	1.6	1.6	1.7
24	1.6	1.8	1.7	1.7	1.7	1.7	1.5	1.7	1.6	1.6	1.6	1.7
25	1.6	1.8	1.7	1.7	1.7	1.7	1.5	1.6	1.7	1.6	1.6	1.7
26	1.6	1.8	1.7	1.7	1.8	1.6	1.5	1.6	1.7	1.6	1.6	1.7
27	1.6	1.8	1.7	1.7	1.8	1.6	1.5	1.6	1.7	1.6	1.6	1.7
28	1.7	1.8	1.7	1.7	1.8	1.6	1.5	1.6	1.7	1.6	1.6	1.7
29	1.7	1.8	1.7	1.7	---	1.6	1.5	1.6	1.7	1.6	1.6	1.7
30	1.7	1.8	1.7	1.7	---	1.5	1.5	1.6	1.7	1.6	1.6	1.7
31	1.7	---	1.7	1.7	---	1.5	---	1.6	---	1.6	1.6	---
TOTAL	49.9	51.9	54.5	53.2	47.2	53.2	45.0	50.0	47.4	50.4	49.0	50.3
MEAN	1.61	1.73	1.76	1.72	1.69	1.72	1.50	1.61	1.58	1.63	1.58	1.68
MAX	1.7	1.8	1.8	1.8	1.8	1.8	1.5	1.7	1.7	1.7	1.6	1.7
MIN	1.5	1.7	1.7	1.7	1.6	1.5	1.5	1.5	1.5	1.6	1.5	1.6
AC-FT	99	103	108	106	94	106	89	99	94	100	97	100

CAL YR 1974 TOTAL 634.1 MEAN 1.74 MAX 2.1 MIN 1.5 AC-FT 1260
WTR YR 1975 TOTAL 602.0 MEAN 1.65 MAX 1.8 MIN 1.5 AC-FT 1190

10271210 BISHOP CREEK BELOW POWERPLANT NO. 6, NEAR BISHOP, CALIF.

LOCATION.--Lat 37°20'59", long 118°27'41", in SE¼SE¼ sec.9, T.7 S., R.32 E., Inyo County, below powerplant No. 6 tailrace, and 3.6 mi (5.8 km) west of Bishop.

DRAINAGE AREA.--104 mi^2 or 269 km^2 (natural flow).

PERIOD OF RECORD.--October 1936 to current year. Monthly and yearly mean discharges prior to October 1969, published in WRD Calif. 1971.

GAGE.--None.

AVERAGE DISCHARGE (Actual flow).--40 years, 99.4 ft^3/s (2.815 m^3/s), 72,020 acre-ft/yr (88.8 hm^3/yr).
(Natural flow).--40 years, 106 ft^3/s (3.002 m^3/s), 76,800 acre-ft/yr (94.7 hm^3/yr).

EXTREMES (Actual flow).--Current year: Maximum daily discharge, 183 ft^3/s (5.18 m^3/s) June 17; minimum daily, 44 ft^3/s (1.25 m^3/s) Dec. 3.
Period of record (1970 to current year): Maximum daily discharge, 337 ft^3/s (9.54 m^3/s) June 28, 1973; minimum daily, 44 ft^3/s (1.25 m^3/s) Dec. 3, 1974.

REMARKS.--Flow regulated for power development by South Lake, Lake Sabrina, and Intake No. 2 Reservoir, combined capacity, 20,660 acre-ft (25.5 hm^3) and many powerhouses. Records for "actual flow" include Bishop Creek above powerplant No. 6 tailrace and Bishop Creek powerplant No. 6 conduit. Records for "natural flow" include "actual flow" of Bishop Creek below powerplant No. 6, Abelour ditch near Bishop, minus Birch-McGee diversion to Bishop Creek powerplant near Bishop, and the change in contents and evaporation for South Lake, Lake Sabrina, and Intake No. 2 Reservoir.

COOPERATION.--Records furnished by Southern California Edison Co. and reviewed by Geological Survey, in connection with a Federal Power Commission project.

DISCHARGE, IN CUBIC FEET PER SECOND, WATER YEAR OCTOBER 1974 TO SEPTEMBER 1975
MEAN VALUES

DAY	OCT	NOV	DEC	JAN	FEB	MAR	APR	MAY	JUN	JUL	AUG	SEP
1	114	82	46	82	82	78	114	115	147	178	143	130
2	118	85	46	83	78	82	116	114	151	179	140	130
3	113	85	44	83	81	82	116	119	156	172	142	130
4	113	86	50	83	73	83	113	125	155	161	141	130
5	111	86	46	82	62	82	115	117	155	163	142	131
6	112	84	52	81	61	83	107	116	157	172	141	131
7	115	86	56	81	60	83	105	119	169	179	142	129
8	112	84	56	81	58	84	116	124	165	180	141	131
9	112	83	56	74	61	82	126	125	160	180	138	128
10	111	71	56	83	61	83	121	131	158	178	140	138
11	111	56	54	80	59	85	121	133	156	177	143	135
12	112	57	55	80	62	84	121	137	155	181	143	133
13	111	57	56	83	62	83	122	141	157	172	140	132
14	112	57	54	81	60	83	119	145	159	172	141	131
15	112	57	56	81	61	84	113	145	170	179	144	130
16	111	59	58	80	61	83	115	146	173	179	141	131
17	112	59	58	79	61	84	115	143	183	175	142	132
18	112	59	55	81	65	84	116	146	176	177	139	134
19	112	59	56	80	62	82	114	148	167	177	134	134
20	111	57	62	80	62	83	114	147	175	175	133	134
21	113	59	80	80	61	85	115	142	176	171	133	133
22	112	62	80	81	62	85	124	147	179	161	129	134
23	111	62	81	81	60	77	120	145	179	149	131	134
24	110	62	81	81	62	82	117	147	180	146	130	135
25	111	63	83	81	62	99	116	148	176	142	130	133
26	111	62	83	81	62	112	112	146	176	141	131	132
27	116	53	81	80	62	111	111	146	177	141	132	135
28	110	45	79	82	62	115	112	147	177	142	132	133
29	110	47	81	84	---	117	112	147	178	146	131	131
30	111	49	80	83	---	121	111	145	178	145	131	130
31	98	---	82	77	---	116	---	144	---	142	130	---
TOTAL	3460	1973	1963	2509	1785	2777	3469	4240	5020	5132	4250	3964
MEAN	112	65.8	63.3	80.9	63.8	89.6	116	137	167	166	137	132
MAX	118	86	83	84	82	121	126	148	183	181	144	138
MIN	98	45	44	74	58	77	105	114	147	141	129	128
AC-FT	6860	3910	3890	4980	3540	5510	6880	8410	9960	10180	8430	7860
(a)	3,230	2,400	2,670	2,760	2,670	3,060	3,120	10,490	19,410	13,620	5,370	4,040

CAL YR 1974 TOTAL 42985 MEAN 118 MAX 267 MIN 44 AC-FT 85260 a 81,150
WTR YR 1975 TOTAL 40542 MEAN 111 MAX 183 MIN 44 AC-FT 80420 a 72,840

a Computed natural flow, in acre-feet.

10276000 BIG PINE CREEK NEAR BIG PINE, CALIF.

LOCATION.--Lat 37°08'42", long 118°18'52", in SW¼SW¼SE¼ sec.24, T.9 S., R.33 E., Inyo County, on left bank 0.3 mi (0.5 km) downstream from Little Pine Creek, 0.5 mi (0.8 km) downstream from powerhouse No. 3, and 2.2 mi (3.5 km) southwest of Big Pine.

DRAINAGE AREA.--39.0 mi^2 (101.0 km^2).

PERIOD OF RECORD.--November 1907 to February 1911, January 1920 to current year; combined records of creek and diversions, June 1930 to current year. Monthly discharge only for some periods, published in WSP 1314 and 1734.

GAGE.--Water-stage recorder and Parshall flume since April 1949 on creek; water-stage recorder and Parshall flume on each diversion. Altitude of gage is 4,500 ft (1,372 m), from topographic map. Prior to January 1923, nonrecording gage at same site and datum.

AVERAGE COMBINED DISCHARGE.--45 years (1930-75), 41.1 ft^3/s (1.164 m^3/s), 29,780 acre-ft/yr (36.7 hm^3/yr).

EXTREMES (Creek only).--Current year: Maximum daily discharge, 183 ft^3/s (5.18 m^3/s) June 16, July 11; minimum daily, 7.4 ft^3/s (0.21 m^3/s) Feb. 25, 26.
Period of record: Maximum discharge, 458 ft^3/s (13.0 m^3/s) July 3, 1932 (gage height, 6.55 ft or 1.996 m); no flow Dec. 3-12, 1935.
(Combined flow).--Current year: Maximum daily discharge, 196 ft^3/s (5.55 m^3/s) July 11; minimum daily, 11 ft^3/s (0.312 m^3/s) on several days.
Period of record: Maximum discharge, 458 ft^3/s (13.0 m^3/s) July 3, 1932; minimum daily, 6.4 ft^3/s (0.181 m^3/s) Dec. 11, 12, 1935.

REMARKS.--Records poor. No regulation above station. Diversions above station for power and irrigation. At times since 1962 discharge from Little Pine Creek has been spread in nearby meadows and does not reach gage as surface flow. For records of combined discharge of Big Pine Creek and Giroux ditches which divert above station, see following page.

COOPERATION.--Records furnished by city of Los Angeles, Department of Water and Power.

DISCHARGE, IN CUBIC FEET PER SECOND, WATER YEAR OCTOBER 1974 TO SEPTEMBER 1975
MEAN VALUES

DAY	OCT	NOV	DEC	JAN	FEB	MAR	APR	MAY	JUN	JUL	AUG	SEP
1	24	19	14	11	8.5	8.2	7.9	10	75	78	49	25
2	27	19	14	11	9.5	7.9	8.2	11	72	74	49	24
3	27	19	16	11	9.8	7.9	7.9	11	74	74	49	23
4	25	19	17	10	9.0	7.9	7.9	12	78	77	49	18
5	24	19	15	11	9.5	8.7	8.2	11	83	88	54	18
6	23	19	15	11	9.3	8.5	8.5	11	96	107	55	18
7	23	19	15	11	9.0	8.7	8.5	11	116	122	47	18
8	24	19	14	10	8.7	9.8	8.7	12	106	124	45	20
9	23	18	14	10	9.3	9.3	8.7	14	116	125	50	51
10	22	18	14	11	9.8	9.3	8.7	16	130	133	46	48
11	22	18	13	10	9.3	9.3	9.3	18	123	183	49	45
12	22	18	13	10	9.3	8.5	9.0	22	135	167	47	36
13	22	16	13	10	9.3	8.7	8.7	24	139	150	48	30
14	21	16	13	10	9.3	8.7	8.5	26	144	122	46	25
15	21	16	13	9.8	9.0	8.5	8.5	30	159	105	45	24
16	20	16	13	9.8	9.0	8.5	8.2	31	183	86	43	21
17	19	16	13	9.5	9.3	8.5	8.2	31	152	84	41	24
18	19	16	12	9.5	9.3	8.2	8.5	33	110	88	42	32
19	19	16	13	9.3	7.9	7.9	8.7	41	78	94	42	32
20	19	15	14	9.0	7.9	7.9	8.7	38	65	94	37	32
21	19	14	14	9.3	8.5	8.2	9.3	29	55	89	30	29
22	19	14	12	9.0	8.7	8.7	9.3	25	60	79	27	29
23	18	14	13	8.7	7.7	8.7	9.3	25	77	80	25	26
24	18	14	12	8.7	7.7	9.0	9.3	31	77	80	24	23
25	18	14	12	8.7	7.4	9.8	9.8	42	60	80	25	21
26	18	14	12	8.5	7.4	8.7	9.3	47	54	76	28	20
27	18	14	12	8.5	7.9	9.0	9.3	49	62	75	29	18
28	19	14	12	9.3	8.2	9.0	9.5	53	65	72	27	17
29	19	14	12	11	---	10	10	52	72	91	26	16
30	19	14	12	8.5	---	9.0	10	55	80	75	26	15
31	19	---	12	8.5	---	8.7	---	64	---	53	26	---
TOTAL	650	491	413	302.6	245.5	269.7	264.6	885	2896	3025	1226	778
MEAN	21.0	16.4	13.3	9.76	8.77	8.70	8.82	28.5	96.5	97.6	39.5	25.9
MAX	27	19	17	11	9.8	10	10	64	183	183	55	51
MIN	18	14	12	8.5	7.4	7.9	7.9	10	54	53	24	15
AC-FT	1290	974	819	600	487	535	525	1760	5740	6000	2430	1540

CAL YR 1974 TOTAL 14572.3 MEAN 39.9 MAX 182 MIN 9.0 AC-FT 28900
WTR YR 1975 TOTAL 11446.4 MEAN 31.4 MAX 183 MIN 7.4 AC-FT 22700

10276000 BIG PINE CREEK NEAR BIG PINE, CALIF.--Continued

COMBINED DISCHARGE, IN CUBIC FEET PER SECOND, OF BIG PINE CREEK AND UPPER AND LOWER GIROUX DITCHES, NEAR BIG PINE, CALIF., WATER YEAR OCTOBER 1974 TO SEPTEMBER 1975

DAY	OCT	NOV	DEC	JAN	FEB	MAR	APR	MAY	JUN	JUL	AUG	SEP
1	26	21	16	15	11	12	11	13	84	90	61	37
2	28	21	16	16	12	12	12	14	81	86	62	36
3	28	21	18	15	12	12	11	14	83	86	62	35
4	26	21	19	14	11	12	11	15	87	89	62	29
5	25	20	17	15	11	13	12	14	92	100	67	29
6	24	20	17	15	11	12	12	14	105	119	67	29
7	24	20	17	15	12	13	12	14	125	134	60	29
8	25	20	16	14	13	14	12	15	115	136	58	32
9	24	19	15	14	13	13	12	17	125	138	63	64
10	23	19	16	15	14	13	12	19	140	146	59	61
11	23	19	16	14	13	13	13	21	133	196	62	58
12	23	20	16	14	13	12	12	25	145	180	60	49
13	23	19	16	14	13	13	12	31	149	163	61	42
14	22	19	16	14	13	13	11	35	153	135	59	37
15	22	19	16	14	13	12	12	38	169	118	58	36
16	22	19	16	14	13	12	11	39	193	99	56	32
17	21	19	16	13	13	12	11	39	162	97	54	36
18	21	19	14	13	13	12	12	42	120	101	55	45
19	21	19	14	13	12	12	12	50	88	107	55	45
20	21	18	15	12	12	12	12	47	75	107	50	44
21	21	17	16	13	12	12	12	37	65	102	42	41
22	21	17	14	11	13	13	12	33	70	92	39	41
23	20	17	15	11	12	13	12	33	87	93	37	38
24	20	17	14	11	12	13	12	39	87	93	36	35
25	20	17	14	11	11	14	13	51	70	93	37	32
26	20	17	14	11	11	12	12	56	64	89	40	31
27	20	17	15	11	12	13	12	58	72	88	41	29
28	21	17	16	13	12	13	13	62	75	85	39	28
29	21	17	16	14	---	13	13	61	82	104	38	27
30	21	17	16	12	---	12	13	64	90	88	38	26
31	21	---	16	12	---	12	---	73	---	66	38	---
TOTAL	698	562	488	413	343	389	359	1083	3186	3420	1616	1133
MEAN	22.5	18.7	15.7	13.3	12.3	12.5	12.0	34.9	106	110	52.1	37.8
MAX	28	21	19	16	14	14	13	73	193	196	67	64
MIN	20	17	14	11	11	12	11	13	64	66	36	26
AC-FT	1380	1110	968	819	680	772	712	2150	6320	6780	3210	2250

CAL YR 1974 TOTAL 17007 MEAN 46.6 MAX 195 MIN 13 AC-FT 33730
WTR YR 1975 TOTAL 13690 MEAN 37.5 MAX 196 MIN 11 AC-FT 27150

10277400 OWENS RIVER BELOW TINEMAHA RESERVOIR, NEAR BIG PINE, CALIF.
(National stream-quality accounting network station)

LOCATION.--Lat 37°03'15", long 118°13'33", in SW¼NE¼ sec.26, T.10 S., R.34 E., Inyo County, about 100 ft (30 m) west of center of dam, 8.4 mi (13.5 km) southeast of Big Pine.

DRAINAGE AREA.--1,964 mi^2 (5,087 km^2).

PERIOD OF RECORD.--October 1974 to September 1975. Since November 1951 in files of city of Los Angeles, Department of Water and Power as Owens River at Tinemaha Dam.

GAGE.--Water-stage recorder and Parshall flume. Altitude of gage is 3,860 ft (1,177 m), from topographic map.

EXTREMES.--Current year: Maximum daily discharge, 781 ft^3/s (22.1 m^3/s) July 4; minimum daily, 5.0 ft^3/s (0.142 m^3/s) Sept. 20-25.

REMARKS.--Records poor. Flow regulated since 1941 by Lake Crowley, capacity, 183,500 acre-ft (226 km^3) and several small reservoirs, combined capacity, 41,400 acre-ft (51.0 km^3). Diversions from both main stream and tributaries. Water imported from Mono Basin since 1941 for diversion to Los Angeles Aqueduct which diverts 4 mi (6 km) downstream.

COOPERATION.--Records furnished by city of Los Angeles, Department of Water and Power.

DISCHARGE, IN CUBIC FEET PER SECOND, WATER YEAR OCTOBER 1974 TO SEPTEMBER 1975
MEAN VALUES

DAY	OCT	NOV	DEC	JAN	FEB	MAR	APR	MAY	JUN	JUL	AUG	SEP
1	701	627	508	403	407	152	543	687	600	701	654	665
2	701	624	508	401	405	152	574	701	600	701	651	665
3	698	624	505	185	403	218	574	701	627	755	651	667
4	698	576	505	10	403	301	574	701	651	781	651	670
5	701	498	505	190	403	301	574	701	670	778	654	670
6	701	498	500	403	403	301	576	701	695	778	654	667
7	566	498	500	402	403	303	574	701	690	775	654	670
8	301	500	500	405	403	303	574	701	589	778	654	673
9	301	500	500	403	403	301	576	704	597	775	654	678
10	301	505	500	403	401	303	576	701	640	775	651	701
11	301	503	435	405	403	303	576	701	701	743	654	712
12	299	503	403	407	405	303	576	698	701	701	654	715
13	299	503	403	405	401	303	579	698	701	701	715	718
14	299	503	401	403	401	303	603	698	704	701	752	720
15	301	500	401	401	401	303	621	701	704	701	755	718
16	433	500	401	401	398	301	627	667	659	704	752	715
17	624	500	401	401	398	299	624	651	603	701	752	709
18	624	500	401	401	398	301	627	651	603	701	752	704
19	624	498	401	401	242	301	627	651	603	701	752	343
20	624	498	401	401	149	301	627	648	603	698	752	5.0
21	624	500	401	398	149	299	624	648	605	698	740	5.0
22	624	500	403	401	151	299	624	435	603	698	729	5.0
23	624	500	403	403	154	299	624	297	600	701	715	5.0
24	624	498	403	403	154	299	624	297	600	701	706	5.0
25	624	503	401	403	152	299	624	297	600	678	692	5.0
26	624	503	401	403	151	299	621	301	600	651	690	246
27	624	500	403	403	151	426	621	396	597	651	684	704
28	624	503	401	405	151	503	621	603	597	651	678	706
29	624	508	403	405	---	500	656	600	600	648	678	698
30	627	508	401	403	---	235	676	600	643	651	678	704
31	627	---	403	405	---	500	---	600	---	651	670	---
TOTAL	16967	15481	13502	11663	8843	9611	18117	18837	18986	22028	21478	15868.0
MEAN	547	516	436	376	316	310	604	608	633	711	693	529
MAX	701	627	508	407	407	503	676	704	704	781	755	720
MIN	299	498	401	10	149	152	543	297	589	648	651	5.0
AC-FT	33650	30710	26780	23130	17540	19060	35940	37360	37660	43690	42600	31470

WTR YR 1975 TOTAL 191381.0 MEAN 524 MAX 781 MIN 5.0 AC-FT 379600

10277400 OWENS RIVER BELOW TINEMAHA RESERVOIR, NEAR BIG PINE, CALIF.--Continued

PERIOD OF RECORD.--Chemical analyses: October 1974 to September 1975.
Specific conductance: May to September 1975.
Water temperatures: February to September 1975.
Sediment records: Water year 1975 (partial-record station).

EXTREMES.--Current year:
Specific conductance: Maximum recorded, 344 micromhos Sept. 10; minimum recorded, 193 micromhos June 11.
Water temperatures: Maximum recorded, 24.0°C July 25-28; minimum recorded, 2.5°C Feb. 17.

REMARKS.--Aqueduct shut down Sept. 19-25. Other periods of missing temperature data due to equipment malfunction.

WATER QUALITY DATA, WATER YEAR OCTOBER 1974 TO SEPTEMBER 1975

DATE	TIME	INSTANTANEOUS DISCHARGE (CFS)	SPECIFIC CONDUCTANCE (MICROMHOS)	TEMPERATURE (DEG C)
OCT.				
15...	1600	301	240	16.0
NOV.				
13...	0845	500	252	8.0
13...	1330	500	254	8.7
15...	0900	500	257	8.0
17...	1100	500	259	9.0
19...	0945	500	263	9.0
20...	1300	500	270	9.0
22...	1300	500	271	9.0
24...	1305	500	271	7.0
26...	1300	500	272	7.0
27...	1300	500	270	7.0
29...	1100	500	270	6.0
DEC.				
01...	0900	500	270	4.0
03...	1100	500	270	5.0
04...	1615	500	275	6.0
06...	0945	500	279	6.0
08...	0930	500	288	4.0
10...	0920	500	289	4.0
10...	1410	500	285	4.8
11...	1315	400	284	5.0
13...	1315	400	283	5.0
15...	0945	400	281	4.0
17...	1100	400	278	5.0
18...	1430	400	281	6.0
20...	0930	400	285	4.0
22...	0920	400	277	3.0
24...	0900	400	284	.0
25...	0915	400	285	.0
27...	1115	400	271	2.0
29...	0845	400	273	1.0
31...	1015	400	275	.0
JAN.				
01...	1015	400	275	.0
03...	1030	400	273	1.0
05...	0930	10	271	5.0
07...	1145	400	269	6.0
08...	0915	400	275	5.2
08...	1030	400	275	5.2
08...	1330	400	273	4.0
10...	1030	400	269	2.0
12...	0730	400	268	2.0
14...	0645	400	271	3.0
15...	1645	400	279	4.0
17...	1700	400	278	4.0
19...	0945	400	282	5.0
21...	1100	400	289	5.0
22...	1030	400	285	6.0
24...	1315	400	287	7.0
26...	1030	400	290	7.0
28...	0930	400	293	3.0
29...	1410	400	295	3.0
31...	0930	400	300	1.0
FEB.				
02...	1230	400	296	3.0
04...	1015	400	296	4.0
05...	1450	400	290	4.5
05...	1700	400	298	4.0
07...	1015	400	301	5.0
09...	0945	400	305	8.0
11...	0900	400	301	6.0
12...	1745	400	310	9.0
14...	0945	400	312	8.0
16...	1330	400	319	6.0
18...	1000	400	310	3.0
19...	1730	150	319	6.0
21...	1715	150	323	4.0
23...	1000	150	313	2.0
25...	0955	150	318	5.0
26...	1830	150	318	7.0
28...	1105	150	321	7.0

10277400 OWENS RIVER BELOW TINEMAHA RESERVOIR, NEAR BIG PINE, CALIF.--Continued

WATER QUALITY DATA, WATER YEAR OCTOBER 1974 TO SEPTEMBER 1975

DATE	TIME	INSTANTANEOUS DISCHARGE (CFS)	SPECIFIC CONDUCTANCE (MICROMHOS)	TEMPERATURE (DEG C)
MAR.				
02...	1300	150	322	10.0
04...	1230	300	321	10.0
05...	1315	300	316	10.0
07...	1300	300	312	8.0
09...	1320	300	321	9.0
11...	1115	300	310	9.0
12...	1030	300	312	9.0
14...	1145	300	307	9.0
16...	1235	300	315	9.0
18...	1000	300	311	8.0
19...	1020	300	317	9.0
21...	1800	300	308	10.0
23...	1730	300	308	11.0
25...	1100	300	300	12.0
26...	1600	300	290	7.2
26...	1830	300	307	7.0
28...	1800	500	305	5.0
30...	1315	41	305	7.0
APR.				
01...	1230	575	295	7.0
02...	1300	575	298	7.0
04...	1545	575	294	9.0
06...	1145	575	292	8.0
08...	1420	575	294	8.0
09...	1425	575	292	9.0
11...	1300	575	289	9.0
13...	1310	575	291	11.0
15...	1000	625	287	11.0
15...	1330	575	288	10.5
16...	1800	625	295	10.5
18...	1100	625	293	9.0
20...	0940	625	290	11.0
22...	1425	625	291	14.0
23...	0830	625	293	13.0
25...	1050	625	296	13.0
27...	1330	625	298	12.0
29...	1215	675	296	12.0
30...	1900	675	296	12.0
MAY				
02...	1300	700	297	13.0
04...	1020	700	300	12.0
06...	1320	700	295	11.5
07...	1315	700	296	14.0
09...	1900	700	299	16.0
11...	1515	700	311	18.0
13...	1305	700	294	16.0
14...	1430	700	288	16.5
16...	1700	650	295	18.0
18...	0530	650	283	16.0
20...	1410	650	296	14.0
20...	1500	650	300	14.0
21...	1900	650	288	12.5
23...	1715	300	289	14.0
25...	1300	300	287	17.0
27...	1400	600	285	19.0
28...	1220	600	282	16.0
30...	1940	600	287	17.5
JUNE				
01...	0600	600	276	19.0
03...	0600	600	278	19.0
04...	0830	650	267	19.0
06...	0930	700	263	20.0
08...	1000	592	263	21.0
10...	1230	600	243	20.0
11...	1940	700	228	19.0
13...	2000	700	220	19.0
15...	0955	700	232	21.0
17...	1945	600	232	21.0
18...	1500	600	232	19.5
19...	1700	600	226	18.5
20...	1900	600	236	19.0
22...	1300	600	257	19.0
24...	1340	600	250	19.0
25...	1900	600	248	17.0
27...	0955	600	259	18.0
29...	1050	600	255	19.0
JULY				
01...	0535	700	254	19.5
02...	2000	700	250	20.0
04...	1300	775	255	19.0
06...	1420	775	277	20.0
08...	1400	775	257	22.0
09...	1945	775	248	22.0
11...	1945	700	241	22.0
13...	1010	700	250	23.0
15...	1325	700	236	21.0
16...	2000	700	239	20.5

10277400 OWENS RIVER BELOW TINEMAHA RESERVOIR, NEAR BIG PINE, CALIF.--Continued

WATER QUALITY DATA, WATER YEAR OCTOBER 1974 TO SEPTEMBER 1975

DATE	TIME	INSTANTANEOUS DISCHARGE (CFS)	SPECIFIC CONDUCTANCE (MICROMHOS)	TEMPERATURE (DEG C)
JULY				
18...	0635	700	239	21.0
20...	1340	700	246	24.0
22...	1100	700	239	22.0
23...	2005	700	238	21.5
25...	1305	650	244	23.5
27...	1045	650	248	23.5
29...	0530	650	255	22.0
29...	1515	650	260	22.0
30...	2005	650	246	22.0
AUG.				
01...	1005	650	254	20.0
03...	1340	650	260	21.0
05...	1340	650	262	23.0
06...	2000	650	261	22.0
08...	1950	650	261	21.5
10...	0739	650	259	22.0
12...	1300	650	260	21.5
13...	0740	750	264	20.5
15...	1005	750	265	20.0
17...	1000	750	274	20.0
19...	1345	750	264	19.0
19...	1445	750	253	19.2
19...	1555	750	253	19.2
20...	1340	750	264	19.0
22...	1110	720	259	20.5
24...	1000	710	264	18.0
26...	0545	690	259	19.0
27...	0645	680	258	18.0
29...	0645	675	248	17.0
31...	1345	667	254	21.0
SEP.				
02...	1340	659	255	20.0
03...	1340	659	257	20.0
05...	1040	675	251	18.0
07...	0600	670	248	18.0
09...	1145	680	247	18.0
10...	1645	705	318	20.0
12...	0930	720	264	17.0
14...	1345	715	254	20.0
16...	1340	715	255	20.0
17...	1340	715	256	20.0
18...	1845	5.0	257	21.0
21...	1845	5.0	263	20.0
23...	1900	5.0	259	20.0
24...	1500	5.0	260	20.7
24...	1900	5.0	259	19.5
26...	0645	5.0	256	16.0
28...	1340	701	260	19.0
30...	1345	701	253	18.0

DATE	TIME	INSTANTANEOUS DISCHARGE (CFS)	DISSOLVED SILICA (SIO2) (MG/L)	DISSOLVED CALCIUM (CA) (MG/L)	DISSOLVED MAGNESIUM (MG) (MG/L)	DISSOLVED SODIUM (NA) (MG/L)	DISSOLVED POTASSIUM (K) (MG/L)	BICARBONATE (HCO3) (MG/L)	CARBONATE (CO3) (MG/L)	ALKALINITY AS CACO3 (MG/L)	DISSOLVED SULFATE (SO4) (MG/L)	DISSOLVED CHLORIDE (CL) (MG/L)
OCT.												
15...	1600	301	28	23	3.9	26	3.3	111	--	91	20	9.7
NOV.												
13...	1330	500	26	24	3.0	27	1.8	110	1	92	23	11
DEC.												
10...	1410	500	31	27	3.8	29	3.5	116	0	95	28	11
JAN.												
08...	0915	400	28	25	3.9	28	3.6	113	0	93	26	12
FEB.												
05...	1450	400	29	28	4.2	29	4.0	125	0	103	32	12
MAR.												
26...	1600	300	28	24	5.2	33	4.4	129	0	106	31	11
APR.												
15...	1330	575	25	23	5.0	30	3.7	132	0	108	24	13
MAY												
20...	1500	650	25	25	4.0	32	5.9	139	0	114	21	14
JUNE												
18...	1500	600	21	16	3.0	26	3.1	102	0	84	21	10
JULY												
29...	1515	650	23	20	3.6	25	3.4	114	0	94	16	11
AUG.												
19...	1445	750	26	21	3.2	27	3.7	122	0	100	14	11
SEP.												
24...	1500	5.0	23	22	3.7	27	3.6	123	0	101	16	11

10277400 OWENS RIVER BELOW TINEMAHA RESERVOIR, NEAR BIG PINE, CALIF.--Continued

WATER QUALITY DATA, WATER YEAR OCTOBER 1974 TO SEPTEMBER 1975

DATE	DIS-SOLVED FLUO-RIDE (F) (MG/L)	TOTAL NITRITE PLUS NITRATE (N) (MG/L)	TOTAL KJEL-DAHL NITRO-GEN (N) (MG/L)	TOTAL NITRO-GEN (N) (MG/L)	TOTAL NITRO-GEN (NO3) (MG/L)	TOTAL PHOS-PHORUS (P) (MG/L)	DIS-SOLVED SOLIDS (RESI-DUE AT 180 C) (MG/L)	DIS-SOLVED SOLIDS (SUM OF CONSTI-TUENTS) (MG/L)	DIS-SOLVED SOLIDS (TONS PER AC-FT)	DIS-SOLVED SOLIDS (TONS PER DAY)	HARD-NESS (CA,MG) (MG/L)
OCT.											
15...	.5	.18	.44	.62	2.7	.10	172	169	.23	140	74
NOV.											
13...	.5	.02	.36	.38	1.7	.07	167	172	.23	225	72
DEC.											
10...	.5	.09	.31	.40	1.8	.04	192	191	.26	259	83
JAN.											
08...	.5	.15	.44	.59	2.6	.06	178	183	.24	192	79
FEB.											
05...	.5	.01	.39	.40	1.8	.07	192	200	.26	207	87
MAR.											
26...	.6	.05	.14	.19	.84	.15	200	201	.27	162	81
APR.											
15...	.4	.02	.32	.34	1.5	.10	188	189	.26	292	78
MAY											
20...	.6	.02	.95	.97	4.3	.13	196	196	.27	344	79
JUNE											
18...	.4	.01	.72	.73	3.2	.08	157	151	.21	254	52
JULY											
29...	.6	.05	.62	.67	3.0	.16	158	159	.21	277	65
AUG.											
19...	.5	.11	.41	.52	2.3	.16	167	167	.23	338	66
SEP.											
24...	.5	.06	.91	.97	4.3	.09	185	167	.25	2.50	70

DATE	NON-CAR-BONATE HARD-NESS (MG/L)	PERCENT SODIUM	SODIUM AD-SORP-TION RATIO	SPE-CIFIC CON-DUCT-ANCE (MICRO-MHOS)	PH (UNITS)	TEMPER-ATURE (DEG C)	TUR-BID-ITY (JTU)	TOTAL PHYTO-PLANK-TON (CELLS PER ML)	FECAL COLI-FORM (COL. PER 100 ML)	STREP-TOCOCCI (COL-ONIES PER 100 ML)	TOTAL ORGANIC CARBON (C) (MG/L)
OCT.											
15...	0	42	1.3	240	7.8	16.0	6	7700	86	816	5.3
NOV.											
13...	0	44	1.4	254	8.6	8.7	7	4500	81	81	--
DEC.											
10...	0	42	1.4	285	8.4	4.8	3	1800	82	84	--
JAN.											
08...	0	42	1.4	275	8.3	5.2	2	2800	0	3	4.3
FEB.											
05...	0	41	1.4	290	8.8	4.5	10	39000	6	10	--
MAR.											
26...	0	45	1.6	290	7.7	7.2	34	7700	83	64	--
APR.											
15...	0	44	1.5	288	7.9	10.5	18	16000	82	17	5.0
MAY											
20...	0	45	1.6	300	8.7	14.0	64	22000	54	77	--
JUNE											
18...	0	50	1.6	232	8.8	19.5	18	18000	86	812	--
JULY											
29...	0	44	1.4	260	8.6	22.0	19	15000	811	23	6.3
AUG.											
19...	0	46	1.5	253	8.7	19.2	17	5800	8	36	--
SEP.											
24...	0	44	1.4	260	8.3	20.7	5	11000	17	10	--

10277400 OWENS RIVER BELOW TINEMAHA RESERVOIR, NEAR BIG PINE, CALIF.--Continued

BIOLOGICAL ANALYSES, WATER YEAR OCTOBER 1974 TO SEPTEMBER 1975

PHYTOPLANKTON

DATE	PHYLUM .CLASS ..ORDER ...FAMILY ....GENUS .....SPECIES	COMMON NAME	COUNT (CELLS/ML)	PERCENT OF TOTAL
OCT 15	CHLOROPHYTA	GREEN ALGAE		
	.CHLOROPHYCEAE			
	..VOLVOCALES			
	...CHLAMYDOMONADACEAE			
	....CHLAMYDOMONAS		110	1
	CHRYSOPHYTA	YELLOW-GREEN ALGAE		
	.BACILLARIOPHYCEAE	DIATOMS		
	..CENTRALES	CENTRIC		
	...COSCINODISCACEAE			
	....CYCLOTELLA		1600	21
	....MELOSIRA		1900	25
	..PENNALES	PENNATE		
	...ACHNANTHACEAE			
	....COCCONEIS		165	2
	...DIATOMACEAE			
	....DIATOMA		220	3
	...FRAGILARIACEAE			
	....SYNEDRA		55	1
	...NAVICULACEAE	NAVICULOID		
	....NAVICULA		110	1
	...NITZSCHIACEAE			
	....NITZSCHIA		220	3
	...TABELLARIACEAE			
	....TABELLARIA		160	2
	CYANOPHYTA	BLUE-GREEN ALGAE		
	.MYXOPHYCEAE			
	..CHROOCOCCALES			
	...CHROOCOCCACEAE			
	....ANACYSTIS		1500	20
	..OSCILLATORIALES	FILAMENTOUS		
	...OSCILLATORIACEAE			
	....OSCILLATORIA		1600	21
	TOTAL PHYTOPLANKTON		7700	
NOV 13	CHLOROPHYTA	GREEN ALGAE		
	.CHLOROPHYCEAE			
	..CHLOROCOCCALES			
	...SCENEDESMACEAE			
	....SCENEDESMUS		160	4
	CHRYSOPHYTA	YELLOW-GREEN ALGAE		
	.BACILLARIOPHYCEAE	DIATOMS		
	..CENTRALES	CENTRIC		
	...COSCINODISCACEAE			
	....CYCLOTELLA		3500	78
	....MELOSIRA		120	3
	..PENNALES	PENNATE		
	...ACHNANTHACEAE			
	....ACHNANTHES		41	1
	....COCCONEIS		41	1
	...CYMBELLACEAE			
	....CYMBELLA		41	1
	...FRAGILARIACEAE			
	....FRAGILARIA		82	2
	....SYNEDRA		41	1
	...GOMPHONEMATACEAE			
	....GOMPHONEMA		41	1
	...NAVICULACEAE	NAVICULOID		
	....NAVICULA		210	5
	...NITZSCHIACEAE			
	....NITZSCHIA		160	4
	...SURIRELLACEAE			
	....SURIRELLA		41	1
	TOTAL PHYTOPLANKTON		4500	

10277400 OWENS RIVER BELOW TINEMAHA RESERVOIR, NEAR BIG PINE, CALIF.--Continued

BIOLOGICAL ANALYSES, WATER YEAR OCTOBER 1974 TO SEPTEMBER 1975

PHYTOPLANKTON

DATE	PHYLUM .CLASS ..ORDER ...FAMILY ....GENUS .....SPECIES	COMMON NAME	COUNT (CELLS/ML)	PERCENT OF TOTAL
DEC 10	CHRYSOPHYTA	YELLOW-GREEN ALGAE		
	.BACILLARIOPHYCEAE	DIATOMS		
	..CENTRALES	CENTRIC		
	...COSCINODISCACEAE			
	....CYCLOTELLA		130	7
	....MELOSIRA		350	19
	....STEPHANODISCUS		160	9
	..PENNALES	PENNATE		
	...ACHNANTHACEAE			
	....COCCONEIS		64	3
	...DIATOMACEAE			
	....DIATOMA		95	5
	...FRAGILARIACEAE			
	....ASTERIONELLA		64	3
	....FRAGILARIA		64	3
	....HANNAEA		32	2
	....SYNEDRA		32	2
	...GOMPHONEMATACEAE			
	....GOMPHONEMA		160	9
	...NAVICULACEAE	NAVICULOID		
	....GYROSIGMA		32	2
	....NAVICULA		380	21
	...NITZSCHIACEAE			
	....NITZSCHIA		95	5
	...SURIRELLACEAE			
	....SURIRELLA		64	3
	.XANTHOPHYCEAE			
	..RHIZOCHLORIDALES			
	...STIPITOCOCCACEAE			
	....STIPITOCOCCUS		130	7
	TOTAL PHYTOPLANKTON		1800	
JAN 8	CHRYSOPHYTA	YELLOW-GREEN ALGAE		
	.BACILLARIOPHYCEAE	DIATOMS		
	..CENTRALES	CENTRIC		
	...COSCINODISCACEAE			
	....CYCLOTELLA		2400	87
	..PENNALES	PENNATE		
	...CYMBELLACEAE			
	....CYMBELLA		57	2
	...GOMPHONEMATACEAE			
	....GOMPHONEMA		57	2
	...NAVICULACEAE	NAVICULOID		
	....NAVICULA		57	2
	...NITZSCHIACEAE			
	....NITZSCHIA		170	6
	TOTAL PHYTOPLANKTON		2800	
FEB 5	CHRYSOPHYTA	YELLOW-GREEN ALGAE		
	.BACILLARIOPHYCEAE	DIATOMS		
	..CENTRALES	CENTRIC		
	...COSCINODISCACEAE			
	....CYCLOTELLA		37000	95
	..PENNALES	PENNATE		
	...DIATOMACEAE			
	....DIATOMA			0
	...NAVICULACEAE	NAVICULOID		
	....NAVICULA		480	1
	...NITZSCHIACEAE			
	....NITZSCHIA		1100	3
	TOTAL PHYTOPLANKTON		39000	

10277400 OWENS RIVER BELOW TINEMAHA RESERVOIR, NEAR BIG PINE, CALIF.--Continued

BIOLOGICAL ANALYSES, WATER YEAR OCTOBER 1974 TO SEPTEMBER 1975

PHYTOPLANKTON

DATE	PHYLUM .CLASS ..ORDER ...FAMILY ....GENUS .....SPECIES	COMMON NAME	COUNT· (CELLS/ML)	PERCENT OF TOTAL
MAR 26	CHRYSOPHYTA	YELLOW-GREEN ALGAE		
	.BACILLARIOPHYCEAE	DIATOMS		
	..CENTRALES	CENTRIC		
	...COSCINODISCACEAE			
	....CYCLOTELLA		4900	64
	....MELOSIRA		66	1
	..PENNALES	PENNATE		
	...ACHNANTHACEAE			
	....ACHNANTHES		130	2
	....RHOIOCOSPHENIA		66	1
	...CYMBELLACEAE			
	....EPITHEMIA		66	1
	...FRAGILARIACEAE			
	....FRAGILARIA		200	3
	....SYNEDRA		530	7
	...GOMPHONEMATACEAE			
	....GOMPHONEMA		130	2
	...NAVICULACEAE	NAVICULOID		
	....NAVICULA		400	5
	...NITZSCHIACEAE			
	....NITZSCHIA		1100	15
	...SURIRELLACEAE			
	....SURIRELLA		66	1
	TOTAL PHYTOPLANKTON		7700	
APR 15	CHRYSOPHYTA	YELLOW-GREEN ALGAE		
	.BACILLARIOPHYCEAE	DIATOMS		
	..CENTRALES	CENTRIC		
	...COSCINODISCACEAE			
	....CYCLOTELLA		7700	48
	....STEPHANODISCUS		97	1
	..PENNALES	PENNATE		
	...ACHNANTHACEAE			
	....ACHNANTHES		97	1
	....COCCONEIS		97	1
	...FRAGILARIACEAE			
	....ASTERIONELLA		390	2
	....FRAGILARIA		3300	21
	...GOMPHONEMATACEAE			
	....GOMPHONEMA		97	1
	...MERIDIONACEAE			
	....MERIDION		97	1
	...NAVICULACEAE	NAVICULOID		
	....NAVICULA		1700	10
	...NITZSCHIACEAE			
	....NITZSCHIA		1500	9
	....RHOIOCOSPHENIA		190	1
	CYANOPHYTA	BLUE-GREEN ALGAE		
	.MYXOPHYCEAE			
	..OSCILLATORIALES	FILAMENTOUS		
	...OSCILLATORIACEAE			
	....LYNGBYA		780	5
	TOTAL PHYTOPLANKTON		16000	
MAY 20	CHRYSOPHYTA	YELLOW-GREEN ALGAE		
	.BACILLARIOPHYCEAE	DIATOMS		
	..CENTRALES	CENTRIC		
	...COSCINODISCACEAE			
	....CYCLOTELLA		8500	38
	....MELOSIRA		1600	7
	..PENNALES	PENNATE		
	...ACHNANTHACEAE			
	....ACHNANTHES		530	2
	....COCCONEIS		530	2
	...CYMBELLACEAE			
	....EPITHEMIA		530	2
	...DIATOMACEAE			
	....DIATOMA		530	2
	...FRAGILARIACEAE			
	....ASTERIONELLA		1100	5
	....FRAGILARIA		1600	7
	....SYNEDRA		530	2
	...NAVICULACEAE	NAVICULOID		
	....NAVICULA		2700	12
	...NITZSCHIACEAE			
	....NITZSCHIA		2700	17
	...SURIRELLACEAE			
	....SURIRELLA		530	2
	TOTAL PHYTOPLANKTON		22000	

10277400 OWENS RIVER BELOW TINEMAHA RESERVOIR, NEAR BIG PINE, CALIF.--Continued

BIOLOGICAL ANALYSES, WATER YEAR OCTOBER 1974 TO SEPTEMBER 1975

PHYTOPLANKTON

DATE	PHYLUM .CLASS ..ORDER ...FAMILY ....GENUS .....SPECIES	COMMON NAME	COUNT (CELLS/ML)	PERCENT OF TOTAL
JUNE 18	CHLOROPHYTA	GREEN ALGAE		
	.CHLOROPHYCEAE			
	..CHLOROCOCCALES			
	...OCCYSTACEAE			
	....CLOSTERIOPSIS			0
	...SCENEDESMACEAE			
	....SCENEDESMUS		300	2
	CHRYSOPHYTA	YELLOW-GREEN ALGAE		
	.BACILLARIOPHYCEAE	DIATOMS		
	..CENTRALES	CENTRIC		
	...COSCINODISCACEAE			
	....CYCLOTELLA		900	5
	....MELOSIRA		3900	22
	....STEPHANODISCUS		220	1
	..PENNALES	PENNATE		
	...ACHNANTHACEAE			
	....COCCONEIS			0
	...NAVICULACEAE	NAVICULOID		
	....NAVICULA		300	2
	...NITZSCHIACEAE			
	....NITZSCHIA		750	4
	CYANOPHYTA	BLUE-GREEN ALGAE		
	.MYXOPHYCEAE			
	..OSCILLATORIALES	FILAMENTOUS		
	...NOSTOCACEAE			
	....ANABAENA		11000	63
	TOTAL PHYTOPLANKTON		18000	
JULY 29	CHLOROPHYTA	GREEN ALGAE		
	.CHLOROPHYCEAE			
	..VOLVOCALES			
	...VOLVOCAEAE			
	....PANDORINA		1600	11
	..ZYGNEMATALES			
	...ZYGNEMATACEAE			
	....MOUGEOTIA		300	2
	CHRYSOPHYTA	YELLOW-GREEN ALGAE		
	.BACILLARIOPHYCEAE	DIATOMS		
	..CENTRALES	CENTRIC		
	...COSCINODISCACEAE			
	....CYCLOTELLA		710	5
	....MELOSIRA		1500	10
	....STEPHANODISCUS		100	1
	..PENNALES	PENNATE		
	...CYMBELLACEAE			
	....EPITHEMIA		100	1
	...FRAGILARIACEAE			
	....FRAGILARIA		100	1
	....SYNEDRA		200	1
	...GOMPHONEMATACEAE			
	....GOMPHONEMA		100	1
	...NAVICULACEAE	NAVICULOID		
	....NAVICULA		610	4
	...SURIRELLACEAE			
	....SURIRELLA		300	2
	...ACHNANTHACEAE			
	....RHOIOCOSPHENIA		100	1
	CYANOPHYTA	BLUE-GREEN ALGAE		
	.MYXOPHYCEAE			
	..OSCILLATORIALES	FILAMENTOUS		
	...NOSTOCACEAE			
	....ANABAENA		9300	61
	EUGLENOPHYTA			
	.EUGLENOPHYCEAE			
	..EUGLENALES			
	...EUGLENACEAE			
	....EUGLENA		100	1
	TOTAL PHYTOPLANKTON		15000	

10277400 OWENS RIVER BELOW TINEMAHA RESERVOIR, NEAR BIG PINE, CALIF.--Continued

BIOLOGICAL ANALYSES, WATER YEAR OCTOBER 1974 TO SEPTEMBER 1975

PHYTOPLANKTON

DATE	PHYLUM .CLASS ..ORDER ...FAMILY ....GENUS .....SPECIES	COMMON NAME	COUNT (CELLS/ML)	PERCENT OF TOTAL
AUG 19	CHRYSOPHYTA	YELLOW-GREEN ALGAE		
	.BACILLARIOPHYCEAE	DIATOMS		
	..CENTRALES	CENTRIC		
	...COSCINODISCACEAE			
	....CYCLOTELLA			0
	....MELOSIRA		1500	26
	....STEPHANODISCUS			0
	..PENNALES	PENNATE		
	...ACHNANTHACEAE			
	....COCCONEIS		43	1
	...CYMBELLACEAE			
	....CYMBELLA		43	1
	...DIATOMACEAE			
	....DIATOMA		43	1
	...FRAGILARIACEAE			
	....ASTERIONELLA		43	1
	....FRAGILARIA		470	8
	....SYNEDRA		43	1
	...GOMPHONEMATACEAE			
	....GOMPHONEMA		43	1
	...MERIDIONACEAE			
	....MERIDION		43	1
	...NAVICULACEAE	NAVICULOID		
	....NAVICULA		430	7
	....NEIDIUM			0
	...SURIRELLACEAE			
	....SURIRELLA			0
	...ACHNANTHACEAE			
	....RHOIOCOSPHENIA		43	1
	CYANOPHYTA	BLUE-GREEN ALGAE		
	.MYXOPHYCEAE			
	..CHROOCOCCALES			
	...CHROOCOCCACEAE			
	....AGMENELLUM		170	3
	....ANACYSTIS		1600	28
	..OSCILLATORIALES	FILAMENTOUS		
	...NOSTOCACEAE			
	....ANABAENA		1200	21
	PYRROPHYTA			
	.DINOPHYCEAE			
	..PERIDINIALES			
	...GLENODINIACEAE			
	....GLENODINIUM		43	1
	TOTAL PHYTOPLANKTON		5800	
SEP 24	CHLOROPHYTA	GREEN ALGAE		
	.CHLOROPHYCEAE			
	..CHLOROCOCCALES			
	...OCCYSTACEAE			
	....ANKISTRODESMUS		90	1
	...SCENEDESMACEAE			
	....SCENEDESMUS		180	2
	..VOLVOCALES			
	...CHLAMYDOMONADACEAE			
	....CHLAMYDOMONAS		90	1
	CHRYSOPHYTA	YELLOW-GREEN ALGAE		
	.BACILLARIOPHYCEAE	DIATOMS		
	..CENTRALES	CENTRIC		
	...COSCINODISCACEAE			
	....CYCLOTELLA		1200	10
	....MELOSIRA		2000	17
	..PENNALES	PENNATE		
	...GOMPHONEMATACEAE			
	....GOMPHONEMA		90	1
	...NAVICULACEAE	NAVICULOID		
	....NAVICULA		450	4
	...NITZSCHIACEAE			
	....NITZSCHIA		3500	29
	CYANOPHYTA	BLUE-GREEN ALGAE		
	.MYXOPHYCEAE			
	..CHROOCOCCALES			
	...CHROOCOCCACEAE			
	....ANACYSTIS		1300	11
	..OSCILLATORIALES	FILAMENTOUS		
	...NOSTOCACEAE			
	....ANABAENA		3100	26
	PYRROPHYTA			
	.DINOPHYCEAE			
	..PERIDINIALES			
	...PERIDINIACEAE			
	....PERIDINIUM			0
	TOTAL PHYTOPLANKTON		12000	

10277400 OWENS RIVER BELOW TINEMAHA RESERVOIR, NEAR BIG PINE, CALIF.--Continued

QUALITATIVE AND ASSOCIATED QUANTITATIVE ANALYSES OF BIOLOGICAL DATA, WATER YEAR OCTOBER 1974 TO SEPTEMBER 1975

PERIPHYTON

Date	Length of exposure (days)	Biomass (g/m^2) Dry weight	Biomass (g/m^2) Ash weight	Chlorophyll a (mg/m^2)	Chlorophyll b (mg/m^2)	Biomass pigment ratio	Sampling method
Jan. 8	29	6.2	3.1	1.3	0.2	2400	Polyethylene strip
Apr. 15	20	1.2	.8	.1	.0	4000	Polyethylene strip
July 29	41	7.1	5.5	22	2.6	74	Polyethylene strip

WATER QUALITY DATA, WATER YEAR OCTOBER 1974 TO SEPTEMBER 1975

DATE	TIME	TOTAL IRON (FE) (UG/L)	DIS-SOLVED IRON (FE) (UG/L)	TOTAL MAN-GANESE (MN) (UG/L)	SUS-PENDED MAN-GANESE (MN) (UG/L)	DIS-SOLVED MAN-GANESE (MN) (UG/L)	TOTAL ARSENIC (AS) (UG/L)	SUS-PENDED ARSENIC (AS) (UG/L)	DIS-SOLVED ARSENIC (AS) (UG/L)	TOTAL CAD-MIUM (CD) (UG/L)	SUS-PENDED CAD-MIUM (CD) (UG/L)
OCT. 15...	1600	590	30	40	20	20	46	20	26	<10	<10
JAN. 08...	0915	290	50	10	10	0	16	0	18	10	7
APR. 15...	1330	1700	40	110	100	10	20	0	24	10	9
JULY 29...	1515	1300	70	60	50	10	25	0	29	10	10

DATE	DIS-SOLVED CAD-MIUM (CD) (UG/L)	TOTAL CHRO-MIUM (CR) (UG/L)	SUS-PENDED CHRO-MIUM (CR) (UG/L)	DIS-SOLVED CHRO-MIUM (CR) (UG/L)	TOTAL COBALT (CO) (UG/L)	SUS-PENDED COBALT (CO) (UG/L)	DIS-SOLVED COBALT (CO) (UG/L)	TOTAL COPPER (CU) (UG/L)	SUS-PENDED COPPER (CU) (UG/L)	DIS-SOLVED COPPER (CU) (UG/L)	TOTAL LEAD (PB) (UG/L)
OCT. 15...	0	0	0	0	<50	<50	0	<10	<2	8	<100
JAN. 08...	3	0	0	0	50	49	1	20	10	10	100
APR. 15...	1	10	10	0	50	50	0	10	1	9	100
JULY 29...	0	6	6	0	0	0	0	10	6	4	100

DATE	SUS-PENDED LEAD (PB) (UG/L)	DIS-SOLVED LEAD (PB) (UG/L)	TOTAL MERCURY (HG) (UG/L)	SUS-PENDED MERCURY (HG) (UG/L)	DIS-SOLVED MERCURY (HG) (UG/L)	TOTAL SELE-NIUM (SE) (UG/L)	SUS-PENDED SELE-NIUM (SE) (UG/L)	DIS-SOLVED SELE-NIUM (SE) (UG/L)	TOTAL ZINC (ZN) (UG/L)	SUS-PENDED ZINC (ZN) (UG/L)	DIS-SOLVED ZINC (ZN) (UG/L)
OCT. 15...	<89	11	.0	.0	.0	0	0	0	830	820	10
JAN. 08...	94	6	.0	.0	.2	0	0	0	70	60	10
APR. 15...	94	6	--	--	1.6	0	0	0	40	10	30
JULY 29...	98	2	.0	.0	.0	0	0	0	40	20	20

10277400 OWENS RIVER BELOW TINEMAHA RESERVOIR, NEAR BIG PINE, CALIF.--Continued

SPECIFIC CONDUCTANCE (MICROMHOS/CM AT 25 DEG. C), WATER YEAR OCTOBER 1974 TO SEPTEMBER 1975

	FEBRUARY			MARCH			APRIL			MAY		
DAY	MAX	MIN	MEAN	MAX	MIN	MEAN	MAX	MIN	MEAN	MAX	MIN	MEAN
1										---	---	---
2										---	---	---
3										---	---	---
4										---	---	---
5										---	---	---
6										---	---	---
7										---	---	---
8										---	---	---
9										---	---	---
10										---	---	---
11										---	---	---
12										---	---	---
13										---	---	---
14										---	---	---
15										---	---	---
16										---	---	---
17										---	---	---
18										---	---	---
19										---	---	---
20										299	293	296
21										306	285	297
22										311	255	288
23										289	265	278
24										334	243	281
25										295	273	287
26										291	272	282
27										297	285	291
28										294	279	286
29										294	273	288
30										307	272	287
31										290	258	278
MONTH										---	---	---

	JUNE			JULY			AUGUST			SEPTEMBER		
DAY	MAX	MIN	MEAN	MAX	MIN	MEAN	MAX	MIN	MEAN	MAX	MIN	MEAN
1	276	244	263	260	242	253	260	250	255	255	248	252
2	281	251	270	274	234	253	264	253	259	257	252	255
3	282	236	269	256	251	255	264	253	260	259	254	257
4	267	243	259	258	249	254	265	257	262	256	252	254
5	275	243	264	267	246	262	264	253	260	252	247	250
6	275	231	258	280	256	271	264	261	263	250	242	246
7	280	252	269	278	250	263	267	261	264	246	241	244
8	279	247	264	266	238	253	267	257	263	246	239	244
9	266	246	256	253	237	244	263	254	261	248	239	245
10	255	239	250	252	232	244	260	251	257	344	242	312
11	244	193	229	261	241	253	261	255	258	294	255	271
12	238	213	226	255	227	243	263	252	258	269	245	255
13	235	214	222	250	224	234	265	256	262	260	248	253
14	242	219	229	251	235	242	265	260	263	260	252	256
15	257	223	232	257	232	235	268	263	265	260	247	254
16	242	227	234	249	229	235	272	268	270	261	255	258
17	247	232	237	246	230	238	275	269	274	259	255	257
18	239	223	232	247	231	240	273	267	271	261	255	258
19	229	210	221	244	228	239	269	253	264	260	255	259
20	245	236	240	254	234	241	269	258	264	---	---	---
21	251	239	245	246	236	241	265	257	262	---	---	---
22	260	237	248	246	230	240	265	256	261	---	---	---
23	244	230	238	250	227	236	264	259	261	---	---	---
24	271	228	247	249	241	243	264	260	263	---	---	---
25	254	245	250	260	244	252	260	256	258	---	---	---
26	258	249	254	272	244	251	259	254	257	267	260	262
27	262	244	253	256	244	251	262	255	257	265	257	262
28	291	243	251	287	240	259	254	248	251	262	252	258
29	255	246	251	270	226	255	249	244	247	258	251	255
30	262	241	250	250	240	248	253	247	250	257	247	252
31	---	---	---	256	252	254	255	250	252	---	---	---
MONTH	291	193	247	287	224	248	275	244	260	344	239	257

10277400 OWENS RIVER BELOW TINEMAHA RESERVOIR, NEAR BIG PINE, CALIF.--Continued

TEMPERATURE (DEG. C) OF WATER, WATER YEAR OCTOBER 1974 TO SEPTEMBER 1975

	FEBRUARY			MARCH			APRIL			MAY		
DAY	MAX	MIN	MEAN	MAX	MIN	MEAN	MAX	MIN	MEAN	MAX	MIN	MEAN
1	---	---	---	---	---	---	7.5	6.0	7.0	13.5	11.5	12.5
2	---	---	---	---	---	---	8.0	6.5	7.0	14.5	12.5	13.5
3	---	---	---	---	---	---	8.5	7.5	8.0	14.5	13.5	14.0
4	---	---	---	---	---	---	9.0	8.0	8.5	13.5	11.5	12.5
5	5.5	4.0	5.0	---	---	---	9.0	8.0	8.5	12.0	10.0	11.0
6	5.5	4.5	5.0	---	---	---	8.5	7.5	8.0	12.5	10.0	11.5
7	6.5	5.0	6.0	---	---	---	8.0	7.0	7.5	15.0	11.5	13.0
8	7.5	6.0	6.5	---	---	---	8.5	7.5	8.0	16.0	13.5	15.0
9	8.0	7.0	7.5	---	---	---	10.0	7.5	8.5	16.5	14.0	15.5
10	8.0	6.5	7.0	---	---	---	9.5	8.5	9.0	16.5	15.0	16.0
11	8.5	6.5	7.5	---	---	---	9.5	8.5	9.0	18.5	15.5	16.5
12	9.5	7.5	8.5	---	---	---	10.5	9.0	10.0	17.5	15.0	16.5
13	8.5	8.0	8.5	---	---	---	11.0	10.0	10.5	18.0	15.5	16.5
14	8.5	7.0	7.5	---	---	---	12.0	10.5	11.5	18.5	16.0	17.5
15	6.5	5.0	5.5	---	---	---	11.5	10.0	10.5	18.5	16.0	17.0
16	5.5	3.5	5.0	---	---	---	11.0	9.5	10.0	18.0	17.0	17.5
17	3.5	2.5	3.0	---	---	---	10.0	9.5	9.5	18.5	16.5	17.0
18	---	---	---	---	---	---	11.0	9.0	9.5	19.0	16.5	17.5
19	---	---	---	---	---	---	12.5	9.0	10.5	19.5	17.5	18.5
20	---	---	---	---	---	---	12.0	10.5	11.0	17.5	12.0	15.5
21	---	---	---	---	---	---	13.5	11.0	12.5	12.5	11.0	11.5
22	---	---	---	---	---	---	14.0	12.5	13.0	15.0	11.5	13.5
23	---	---	---	---	---	---	15.0	13.0	14.0	16.0	14.0	15.0
24	---	---	---	---	---	---	14.0	13.5	13.5	18.5	15.5	16.5
25	---	---	---	---	---	---	13.5	11.5	12.5	18.5	16.5	17.0
26	---	---	---	---	---	---	11.5	10.0	11.0	18.0	16.5	17.0
27	---	---	---	6.0	5.5	6.0	11.0	9.5	10.0	19.0	17.5	18.0
28	---	---	---	5.5	4.0	5.0	12.5	10.0	11.5	18.5	17.0	17.5
29	---	---	---	5.5	4.0	4.5	12.5	11.5	12.0	18.5	16.5	17.5
30	---	---	---	---	---	---	12.0	11.5	12.0	18.5	17.0	17.5
31	---	---	---	7.0	6.0	6.5	---	---	---	20.0	18.0	18.5
MONTH	---	---	---	---	---	---	15.0	6.0	10.0	20.0	10.0	15.5

	JUNE			JULY			AUGUST			SEPTEMBER		
DAY	MAX	MIN	MEAN	MAX	MIN	MEAN	MAX	MIN	MEAN	MAX	MIN	MEAN
1	20.0	19.0	19.5	20.0	19.5	20.0	21.5	20.5	21.0	22.0	17.0	19.0
2	21.0	19.5	20.0	20.5	19.5	20.0	21.5	20.5	21.0	21.5	17.0	19.0
3	21.5	19.5	20.5	19.5	19.0	19.5	22.0	21.0	21.5	21.5	17.0	19.0
4	20.5	19.5	20.0	19.5	18.5	19.0	22.5	21.5	22.0	22.0	17.5	19.5
5	20.0	18.5	19.5	20.0	19.0	19.5	23.5	22.0	22.5	22.5	18.0	20.0
6	20.5	19.5	20.0	21.0	20.0	20.5	23.5	22.0	22.5	23.0	18.0	20.0
7	21.5	20.0	20.5	22.0	20.5	21.0	23.5	21.5	22.0	23.0	18.0	20.0
8	21.5	20.5	21.0	22.5	21.0	22.0	23.0	21.5	22.0	20.0	19.0	19.5
9	21.0	20.0	20.5	22.0	21.5	22.0	23.0	22.0	22.5	22.0	18.5	20.0
10	20.0	19.0	19.5	22.5	22.0	22.0	23.0	22.0	22.5	21.5	17.5	19.5
11	19.5	19.0	19.5	23.5	22.0	22.5	22.0	21.5	22.0	20.0	18.0	19.0
12	20.0	19.5	19.5	23.5	22.5	23.0	22.5	21.5	22.0	21.0	17.0	19.0
13	21.0	19.5	20.0	23.5	22.5	23.0	22.0	21.0	21.5	21.0	17.5	19.0
14	21.5	20.0	20.5	22.5	22.0	22.0	21.5	20.5	21.0	21.0	18.0	19.5
15	21.5	20.0	21.0	21.5	21.0	21.5	21.0	20.0	20.5	21.0	18.0	19.0
16	22.0	20.5	21.5	22.0	20.5	21.0	21.5	19.5	20.0	21.5	17.5	19.5
17	22.0	21.0	21.5	22.0	21.0	21.5	21.5	19.5	20.5	20.5	18.5	19.5
18	21.5	19.5	20.5	22.0	21.0	21.5	21.0	19.5	20.0	22.5	18.5	20.0
19	20.5	18.0	19.5	22.5	21.5	22.0	20.5	18.5	20.0	---	---	---
20	19.5	18.5	19.0	22.5	21.5	22.0	20.0	17.5	18.5	---	---	---
21	19.5	18.0	18.5	22.5	21.0	21.5	20.5	17.5	18.5	---	---	---
22	20.0	18.0	19.0	23.0	21.0	22.0	21.0	17.5	19.0	---	---	---
23	20.0	19.5	20.0	23.0	22.0	22.5	21.5	17.5	19.5	---	---	---
24	19.5	18.5	19.0	23.5	22.0	22.5	22.5	18.0	20.0	---	---	---
25	18.5	17.0	18.0	24.0	22.0	23.0	23.0	18.5	20.5	---	---	---
26	18.5	17.5	18.0	24.0	22.5	23.5	22.0	18.5	20.0	---	---	---
27	19.5	18.0	18.5	24.0	23.0	23.5	21.5	18.0	19.5	---	---	---
28	19.5	18.5	19.0	24.0	22.5	23.0	22.0	17.5	19.5	19.0	18.0	18.5
29	19.5	18.5	19.0	23.0	22.0	22.5	22.0	17.5	19.5	19.0	17.5	18.5
30	20.0	19.0	19.5	22.5	22.0	22.0	21.5	17.5	19.5	19.5	17.5	18.0
31	---	---	---	22.0	20.5	21.0	21.5	17.5	19.0	---	---	---
MONTH	22.0	17.0	19.5	24.0	18.5	21.5	23.5	17.5	20.5	---	---	---

10277400 OWENS RIVER BELOW TINEMAHA RESERVOIR, NEAR BIG PINE, CALIF.--Continued

PARTICLE-SIZE DISTRIBUTION OF SUSPENDED SEDIMENT,
WATER YEAR OCTOBER 1974 TO SEPTEMBER 1975

DATE	TIME	INSTANTANEOUS DISCHARGE (CFS)	TEMPERATURE (DEG C)	SUSPENDED SEDIMENT (MG/L)	SUSPENDED SEDIMENT DISCHARGE (T/DAY)	SUS. SED. SIEVE DIAM. % FINER THAN .062 MM
OCT.						
15...	1530	300	16.0	22	18	87
NOV.						
13...	1330	500	8.7	16	22	--
DEC.						
10...	1410	500	4.8	9	12	--
JAN.						
08...	1030	400	5.2	6	6.5	--
FEB.						
05...	1450	400	4.5	16	17	94
MAR.						
26...	1600	300	7.2	127	103	95
APR.						
15...	1330	575	10.5	49	76	92
MAY						
20...	1500	650	14.0	260	456	90
JUNE						
18...	1500	600	19.5	86	140	40
JULY						
29...	1515	650	22.0	46	81	75
AUG.						
19...	1555	750	19.2	38	77	89
SEP.						
24...	1500	5.0	20.7	25	.34	30

10278300 LOS ANGELES AQUEDUCT AT OUTLET, AT SAN FERNANDO, CALIF.

LOCATION.--Lat 34°18'46", long 118°29'32" (unsurveyed), Los Angeles County, in Mission de San Fernando substation at Los Angeles Aqueduct outlet at upper end of Van Norman Lake, at San Fernando.

PERIOD OF RECORD.--Chemical analyses: Water year 1967 (partial-record station), October 1967 to current year.

REMARKS.--Chemical-quality records furnished by California Department of Water Resources. Records of discharge furnished by Los Angeles Department of Water and Power.

WATER QUALITY DATA, WATER YEAR OCTOBER 1974 TO SEPTEMBER 1975

DATE	DIS-CHARGE (CFS)	DIS-SOLVED SILICA (SIO2) (MG/L)	TOTAL IRON (FE) (UG/L)	TOTAL MAN-GANESE (MN) (UG/L)	DIS-SOLVED CAL-CIUM (CA) (MG/L)	DIS-SOLVED MAG-NE-SIUM (MG) (MG/L)	DIS-SOLVED SODIUM (NA) (MG/L)	DIS-SOLVED PO-TAS-SIUM (K) (MG/L)	ALKA-LINITY AS CACO3 (MG/L)	DIS-SOLVED SULFATE (SO4) (MG/L)	DIS-SOLVED CHLO-RIDE (CL) (MG/L)
NOV.											
21...	324	21	40	<20	23	4.4	29	3.1	98	21	12
DEC.											
19...	541	21	60	<20	24	4.6	30	2.8	100	18	13
JAN.											
26...	623	23	80	<20	25	4.9	31	2.9	113	26	12
FEB.											
19...	555	24	80	<20	26	5.4	30	2.9	113	27	13
MAR.											
17...	404	24	40	<20	26	6.8	30	3.1	125	28	15
APR.											
21...	668	24	60	<20	26	6.3	33	2.8	120	28	15
MAY											
14...	684	23	40	<20	25	5.8	33	3.3	120	22	15
JUNE											
16...	720	23	40	<20	22	4.4	30	3.5	105	20	13
JULY											
21...	755	20	80	<20	20	2.9	25	2.8	88	19	9.9
AUG.											
18...	746	19	20	<20	20	3.7	27	2.7	95	21	10
SEP.											
24...	775	24	60	20	22	5.6	27	3.5	110	20	12

DATE	DIS-SOLVED FLUO-RIDE (F) (MG/L)	BROMIDE (BR) (MG/L)	IODIDE (I) (MG/L)	TOTAL NITRATE (N) (MG/L)	TOTAL NITRITE (N) (MG/L)	AMMONIA NITRO-GEN (N) (MG/L)	TOTAL ORGANIC NITRO-GEN (N) (MG/L)	TOTAL KJEL-DAHL NITRO-GEN (N) (MG/L)	DIS-SOLVED ORTHO. PHOS-PHORUS (P) (MG/L)	HARD-NESS (CA,MG) (MG/L)	PERCENT SODIUM
NOV.											
21...	.5	.0	10	.16	.00	.00	.16	.16	.02	76	44
DEC.											
19...	.6	<.1	13	.20	.00	.00	.16	.16	.01	80	44
JAN.											
26...	.6	<.1	10	.27	.01	.00	.16	.16	.04	82	44
FEB.											
19...	.6	<.1	10	.14	.01	.02	.17	.19	.04	86	42
MAR.											
17...	.6	<.1	20	.16	.00	.00	.16	.16	.04	94	40
APR.											
21...	.6	<.1	12	.07	.00	.02	.10	.12	.05	92	43
MAY											
14...	.6	<.1	10	.16	.00	.00	.08	.08	.06	86	44
JUNE											
16...	.6	<.1	10	.20	.00	.00	.12	.12	.05	74	46
JULY											
21...	.6	<.1	10	.11	.00	.00	.16	.16	.04	62	45
AUG.											
18...	.6	<.1	10	.20	.00	.00	.12	.12	.04	66	48
SEP.											
24...	.5	<.1	20	.00	.00	.00	80	80	.05	79	42

10278300 LOS ANGELES AQUEDUCT AT OUTLET, AT SAN FERNANDO, CALIF.--Continued

WATER QUALITY DATA, WATER YEAR OCTOBER 1974 TO SEPTEMBER 1975

DATE	SODIUM ADSORPTION RATIO	SPECIFIC CONDUCTANCE (MICROMHOS)	PH (UNITS)	TEMPERATURE (DEG C)	TURBIDITY (JTU)	DISSOLVED OXYGEN (MG/L)	CHEMICAL OXYGEN DEMAND (HIGH LEVEL) (MG/L)	BIOCHEMICAL OXYGEN DEMAND 5 DAY (MG/L)	CYANIDE (CN) (MG/L)	PHENOLS (UG/L)	TOTAL ARSENIC (AS) (UG/L)
NOV.											
21...	1.5	240	7.6	14.0	3	10.0	6	2.4	<2.0	<1	20
DEC.											
19...	1.5	296	--	9.5	2	11.0	8	3.8	<10	<1	0
JAN.											
26...	1.5	328	8.2	6.0	4	12.2	6	3.4	<10	<1	30
FEB.											
19...	1.4	338	8.6	6.0	6	11.8	3	3.1	<10	<1	10
MAR.											
17...	1.4	348	--	8.0	3	11.6	6	3.9	<10	<1	20
APR.											
21...	1.5	338	--	10.0	4	10.6	<1	.6	<10	<1	10
MAY											
14...	1.5	326	--	16.0	2	8.8	1	.9	<10	<1	20
JUNE											
16...	1.5	289	--	20.0	4	8.0	4	2.0	<10	<1	10
JULY											
21...	1.4	254	--	22.0	3	7.6	5	1.7	<10	<1	10
AUG.											
18...	1.6	261	--	22.0	2	8.0	2	1.7	<10	<1	20
SEP.											
24...	1.3	296	--	22.0	3	7.8	5	.7	<10	<1	20

DATE	TOTAL BARIUM (BA) (UG/L)	DISSOLVED BORON (B) (UG/L)	TOTAL CADMIUM (CD) (UG/L)	TOTAL CHROMIUM (CR) (UG/L)	TOTAL COPPER (CU) (UG/L)	TOTAL LEAD (PB) (UG/L)	TOTAL MERCURY (HG) (UG/L)	TOTAL SELENIUM (SE) (UG/L)	TOTAL SILVER (AG) (UG/L)	TOTAL ZINC (ZN) (UG/L)
NOV.										
21...	--	370	<2	--	100	<10	<.1	8	--	20
DEC.										
19...	--	380	<2	--	100	<10	<.1	5	--	40
JAN.										
26...	<100	340	<2	--	50	<10	<.1	<4	<20	<10
FEB.										
19...	<100	310	<2	--	50	<10	<.1	<4	<20	30
MAR.										
17...	<10	380	<2	--	50	<10	<1.0	<4	<20	20
APR.										
21...	<100	340	<2	<10	<20	<10	<.1	<2	<20	20
MAY										
14...	<100	330	<2	<10	100	<10	<.1	<2	<20	20
JUNE										
16...	<100	330	<2	<10	100	<10	<.1	<2	<20	<10
JULY										
21...	--	270	<2	--	100	<10	<.1	<2	--	20
AUG.										
18...	<100	290	7	<10	150	<10	<.1	<2	<20	<10
SEP.										
24...	<100	340	<2	--	50	<10	<.1	<2	<20	<10

10281800 INDEPENDENCE CREEK BELOW PINYON CREEK, NEAR INDEPENDENCE, CALIF.

LOCATION.--Lat 36°46'43", long 118°15'49", in NE¼SE¼NW¼ sec.27, T.13 S., R.34 E., Inyo County, on right bank 0.2 mi (0.3 km) downstream from Pinyon Creek, and 4.0 mi (6.4 km) southwest of Independence.

DRAINAGE AREA.--18.1 mi^2 (46.9 km^2).

PERIOD OF RECORD.--January 1923 to current year. Prior to October 1959 monthly discharge only, published in WSP 1734.

GAGE.--Water-stage recorder and Parshall flume (Cipolletti weir used during low flow). Altitude of gage is 5,300 ft (1,615 m), from topographic map. See WSP 1734 for history of changes prior to Dec. 13, 1936.

AVERAGE DISCHARGE.--52 years, 12.6 ft^3/s (0.357 m^3/s), 9,130 acre-ft/yr (11.3 hm^3/yr).

EXTREMES.--Current year: Maximum daily discharge, 47 ft^3/s (1.33 m^3/s) June 7; minimum daily, 1.5 ft^3/s (0.043 m^3/s) Dec. 23.
Period of record: Maximum discharge, 169 ft^3/s (4.79 m^3/s) June 1, 1969 (gage height, 4.45 ft or 1.356 m); minimum daily, 0.70 ft^3/s (0.020 m^3/s) Jan. 25, 1926, Dec. 15, 1935.

REMARKS.--Records poor. No regulation or diversion above station.

COOPERATION.--Records furnished by city of Los Angeles, Department of Water and Power.

DISCHARGE, IN CUBIC FEET PER SECOND, WATER YEAR OCTOBER 1974 TO SEPTEMBER 1975
MEAN VALUES

DAY	OCT	NOV	DEC	JAN	FEB	MAR	APR	MAY	JUN	JUL	AUG	SEP
1	6.6	5.5	3.8	2.8	3.2	2.6	3.2	3.8	41	14	14	5.0
2	7.9	5.5	3.8	2.4	3.2	2.5	3.3	3.9	43	14	13	5.0
3	7.5	5.2	3.9	2.4	3.2	2.5	3.2	4.4	45	14	12	4.9
4	7.0	5.2	5.2	2.6	3.0	2.5	3.2	4.7	45	14	12	4.5
5	6.8	5.0	4.4	2.5	3.5	2.9	3.2	4.5	45	14	11	4.5
6	6.8	4.9	4.1	2.6	3.3	3.0	3.2	4.5	46	14	10	4.4
7	7.3	4.9	3.9	2.6	3.3	3.0	3.2	4.5	47	19	10	4.4
8	7.5	4.7	3.8	2.6	3.2	3.0	3.2	5.0	46	25	9.7	5.0
9	7.0	4.7	3.5	2.6	3.5	3.0	3.3	5.5	46	25	9.5	6.4
10	6.6	4.7	3.6	2.6	3.5	3.0	3.3	6.4	45	25	9.3	6.2
11	6.4	4.7	3.8	3.0	3.2	3.2	3.3	7.5	45	26	9.1	6.4
12	6.2	4.5	3.8	3.0	3.0	3.2	3.3	9.1	46	26	8.9	5.5
13	6.0	4.5	3.6	3.0	3.0	3.2	3.3	11	45	26	8.9	5.4
14	5.9	4.5	3.5	3.0	2.9	3.0	3.3	12	44	25	8.5	5.2
15	5.7	4.5	3.5	3.0	3.3	3.0	3.2	15	45	23	8.3	5.2
16	5.7	4.5	3.5	3.0	3.2	3.0	2.9	18	43	22	8.1	5.0
17	5.5	4.5	3.5	2.9	2.3	2.8	2.9	20	35	21	7.9	5.0
18	5.5	4.4	3.3	2.9	3.8	3.2	3.0	21	30	20	7.5	5.2
19	5.2	4.2	3.2	2.9	3.0	3.0	3.0	26	27	20	8.1	5.0
20	5.2	4.1	3.2	2.8	2.6	2.9	3.0	28	25	19	7.9	5.0
21	5.2	4.1	3.2	2.8	3.5	2.8	3.3	24	22	19	7.7	4.9
22	5.2	4.1	3.3	2.8	3.6	3.5	3.3	20	22	18	7.3	4.9
23	5.2	3.9	1.5	2.8	2.6	3.3	3.3	19	19	17	7.0	4.9
24	5.2	4.1	1.6	2.8	2.5	3.5	3.5	20	15	16	6.6	4.7
25	5.2	3.9	3.0	2.8	2.5	3.9	3.6	24	14	16	6.4	4.5
26	5.4	3.9	3.3	2.6	2.5	3.3	3.6	28	14	15	6.2	4.5
27	5.2	3.8	3.2	2.5	2.6	3.8	3.8	33	14	15	5.9	4.5
28	5.5	3.6	3.2	1.7	2.6	3.3	3.6	34	14	16	5.5	4.4
29	5.5	3.6	3.6	2.2	---	3.9	3.8	35	14	16	5.5	4.2
30	5.5	3.8	4.4	2.5	---	3.5	3.8	35	14	15	5.4	4.2
31	5.5	---	2.6	2.4	---	3.3	---	38	---	15	5.2	---
TOTAL	186.9	133.5	107.8	83.1	85.6	96.6	99.1	524.8	996	584	262.4	148.9
MEAN	6.03	4.45	3.48	2.68	3.06	3.12	3.30	16.9	33.2	18.8	8.46	4.96
MAX	7.9	5.5	5.2	3.0	3.8	3.9	3.8	38	47	26	14	6.4
MIN	5.2	3.6	1.5	1.7	2.3	2.5	2.9	3.8	14	14	5.2	4.2
AC-FT	371	265	214	165	170	192	197	1040	1980	1160	520	295

CAL YR 1974 TOTAL 5187.0 MEAN 14.2 MAX 52 MIN 1.5 AC-FT 10290
WTR YR 1975 TOTAL 3308.7 MEAN 9.06 MAX 47 MIN 1.5 AC-FT 6560

10285700 OWENS RIVER AT KEELER BRIDGE, NEAR LONE PINE, CALIF.

LOCATION.--Lat 36°34'46", long 118°01'06", in NE¼NW¼NW¼ sec.1, T.16 S., R.36 E., Inyo County, on right bank under old timber bridge 0.5 mi (0.8 km) upstream from bridge on State Highway 190, and 3.4 mi (5.5 km) southeast of Lone Pine.

DRAINAGE AREA.--2,604 mi^2 (6,744 km^2).

PERIOD OF RECORD.--January 1927 to current year. Prior to October 1959 monthly discharge only, published in WSP 1314 and 1734.

GAGE.--Water-stage recorder and Cipolletti weir. Altitude of gage is 3,600 ft (1,097 m), from topographic map. See WSP 1734 for history of changes prior to Feb. 14, 1935. Feb. 14, 1935, to Nov. 22, 1964, water-stage recorder and Cipolletti weir at same site and datum. Nov. 23, 1964, to June 26, 1967, nonrecording gage and Cipolletti weir at same site and datum.

EXTREMES.--Current year: Maximum daily discharge, 340 ft^3/s (9.63 m^3/s) Jan. 5; no flow July 28 to Aug. 29.
Period of record: Maximum daily discharge, 1,360 ft^3/s (38.5 m^3/s) June 19, 1969 (gage height, 5.98 ft or 1.823 m); no flow at times in some years.

REMARKS.--Records fair. Natural flow affected by storage in several reservoirs, many natural lakes, diversions for irrigation, and return flow from irrigated areas. Major portion of discharge from basin is diverted through Los Angeles Aqueduct. Discharge reported herein is wasted into Owens Lake.

COOPERATION.--Records furnished by city of Los Angeles, Department of Water and Power.

DISCHARGE, IN CUBIC FEET PER SECOND, WATER YEAR OCTOBER 1974 TO SEPTEMBER 1975
MEAN VALUES

DAY	OCT	NOV	DEC	JAN	FEB	MAR	APR	MAY	JUN	JUL	AUG	SEP
1	1.4	3.0	4.2	5.8	7.9	8.2	7.3	6.7	2.8	2.2	0	.30
2	1.6	3.2	4.2	5.8	7.9	8.2	7.3	6.7	2.6	2.0	0	.30
3	1.8	3.2	4.2	6.7	7.9	8.2	7.3	6.4	2.6	1.6	0	.30
4	1.8	3.2	4.2	19	8.2	8.2	7.3	6.1	2.4	1.4	0	.30
5	1.8	3.2	4.5	340	8.2	7.9	7.3	6.1	2.2	1.4	0	.30
6	1.8	3.2	4.5	170	8.2	8.2	7.3	6.1	3.0	1.2	0	.30
7	2.0	3.2	4.5	35	8.2	8.2	7.3	6.1	5.3	1.1	0	.30
8	2.6	3.5	4.5	19	8.2	9.2	7.6	5.8	5.8	1.1	0	.60
9	2.4	3.5	4.5	15	8.2	9.2	7.3	5.8	5.8	.90	0	.90
10	2.2	3.5	4.5	13	8.2	8.8	7.6	5.8	5.3	.90	0	1.1
11	2.2	3.5	4.5	12	8.2	8.8	7.9	5.5	4.7	.90	0	1.1
12	2.2	3.5	4.5	10	8.2	9.2	8.2	5.3	4.5	.90	0	1.1
13	2.0	3.5	4.7	10	8.8	9.2	8.2	5.3	4.2	.80	0	1.1
14	2.0	3.5	4.7	9.5	8.8	9.2	8.2	5.0	4.0	.60	0	1.1
15	2.2	3.7	4.7	9.5	8.5	9.2	8.2	5.0	3.7	.60	0	1.1
16	2.4	3.7	4.7	9.2	8.5	8.8	8.2	4.7	3.5	.60	0	.90
17	2.6	3.7	5.0	8.8	8.2	8.5	8.2	4.7	3.2	.60	0	1.1
18	2.6	3.7	5.0	8.8	8.8	8.2	7.9	4.5	3.0	.60	0	1.1
19	2.8	3.7	5.3	8.5	8.5	8.2	7.6	4.5	3.0	.60	0	1.2
20	2.8	4.0	5.0	8.5	8.2	8.2	7.6	4.2	3.2	.50	0	1.1
21	2.8	4.0	5.3	8.5	8.2	8.2	7.3	4.2	3.2	.50	0	1.1
22	2.8	4.0	5.5	8.5	7.9	7.9	7.3	4.2	3.2	.60	0	1.1
23	3.0	4.0	5.3	8.5	7.9	7.6	7.3	4.2	3.2	.50	0	1.1
24	3.0	4.0	5.0	8.5	7.9	8.5	7.3	4.0	2.8	.50	0	2.4
25	2.8	4.0	5.0	8.5	7.9	8.2	7.3	4.0	2.6	.40	0	18
26	2.8	4.0	5.3	8.5	8.2	7.6	7.3	3.7	2.4	.30	0	14
27	3.0	4.0	5.3	8.5	8.2	7.6	7.0	3.5	2.8	.10	0	10
28	3.0	4.0	5.5	8.2	8.2	7.6	7.0	3.2	2.8	0	0	7.6
29	3.2	4.0	5.5	8.2	---	7.3	6.7	3.2	2.6	0	0	6.1
30	2.8	4.2	5.8	8.2	---	7.3	6.7	3.0	2.4	0	.10	5.0
31	3.0	---	5.8	8.2	---	7.3	---	3.0	---	0	.30	---
TOTAL	75.4	109.4	151.2	816.4	230.2	256.9	225.0	150.5	102.8	23.40	.40	82.00
MEAN	2.43	3.65	4.88	26.3	8.22	8.29	7.50	4.85	3.43	.75	.013	2.73
MAX	3.2	4.2	5.8	340	8.8	9.2	8.2	6.7	5.8	2.2	.30	18
MIN	1.4	3.0	4.2	5.8	7.9	7.3	6.7	3.0	2.2	0	0	.30
AC-FT	150	217	300	1620	457	510	446	299	204	46	.8	163

CAL YR 1974 TOTAL 1655.68 MEAN 4.54 MAX 18 MIN .27 AC-FT 3280
WTR YR 1975 TOTAL 2223.60 MEAN 6.09 MAX 340 MIN 0 AC-FT 4410

10286000 COTTONWOOD CREEK NEAR OLANCHA, CALIF.

LOCATION.--Lat 36°26'20", long 118°04'48" (unsurveyed), Inyo County, Inyo National Forest, just downstream from intake to Cottonwood powerhouse, and 11.2 mi (18.0 km) north of Olancha.

DRAINAGE AREA.--40.1 mi^2 (103.9 km^2).

PERIOD OF RECORD.--January 1906 to March 1911, January 1914 to current year; combined records of creek and flow through powerhouse, November 1938 to current year. Monthly discharge only January 1914 to September 1959, published in WSP 1314 and 1734.

GAGE.--Water-stage recorder and Parshall flume (Cipolletti weir used during low flow) on creek, destroyed by flood of May 15, 1969; water-stage recorder and Cipolletti weir on powerhouse diversion. Altitude of gage is 4,660 ft (1,420 m), from topographic map. See WSP 1734 for history of changes prior to Oct. 31, 1938. Since May 15, 1969, supplementary gage at site 5.0 mi (8.0 km) downstream at different datum.

AVERAGE COMBINED DISCHARGE.--65 years (1906-10, 1914-75), 22.4 ft^3/s (0.634 m^3/s), 16,230 acre-ft/yr (20.0 hm^3/yr).

EXTREMES (Creek only).--Current year: Maximum daily discharge, 89 ft^3/s (2.52 m^3/s) May 19; minimum daily, 0.20 ft^3/s (0.006 m^3/s) on many days.
Period of record: Maximum discharge, 520 ft^3/s (14.7 m^3/s) June 3, 1969 (gage height, unknown); no flow for some days in some years.
(Combined flow).--Current year: Maximum daily discharge, 97 ft^3/s (2.75 m^3/s) May 19; minimum daily, 4.2 ft^3/s (0.119 m^3/s) Sept. 3.
Period of record: Maximum discharge, 520 ft^3/s (14.7 m^3/s) June 3, 1969; minimum daily, 1.0 ft^3/s (0.028 m^3/s) July 22, 23, 1961.

REMARKS.--Records poor. No regulation above station. Cottonwood powerhouse, maximum capacity, 22 ft^3/s (0.623 m^3/s) has diverted since Nov. 13, 1908. Discharge figures for creek only are estimated by correlation with station 3.0 mi (4.8 km) downstream at the Los Angeles Aqueduct. For records of combined discharge of Cottonwood Creek and powerhouse, see following page.

COOPERATION.--Records furnished by city of Los Angeles, Department of Water and Power.

REVISIONS (WATER YEARS).--WRD Calif. 1973: 1972.

DISCHARGE, IN CUBIC FEET PER SECOND, WATER YEAR OCTOBER 1974 TO SEPTEMBER 1975
MEAN VALUES

DAY	OCT	NOV	DEC	JAN	FEB	MAR	APR	MAY	JUN	JUL	AUG	SEP
1	.20	.20	.20	.20	.20	.20	.20	.20	57	7.0	1.0	.20
2	.20	.20	.20	.20	.20	.20	.20	.20	52	6.0	.20	.20
3	.20	.20	.30	.20	.20	.20	.20	.20	49	5.0	.20	.20
4	.20	.20	.30	.20	.20	1.0	.20	.60	47	4.0	.20	.20
5	.20	.20	.30	.20	.20	.20	.20	1.0	46	3.0	.20	.20
6	.20	.20	.30	.20	.20	.20	.20	1.0	45	1.0	.20	.20
7	.20	.20	.20	.20	.20	.20	.20	2.0	42	1.0	.20	.20
8	.20	.20	.20	.20	.20	.20	.20	9.0	40	1.0	.20	.20
9	.20	.20	.20	.20	.20	.20	.20	18	39	1.0	.20	.20
10	.20	.20	.20	.20	.20	.20	.20	23	37	1.0	.20	.20
11	.20	.20	.20	.20	.20	.20	.20	28	34	1.0	.20	.20
12	.20	.20	.20	.20	.20	.20	.20	38	33	8.0	.20	.20
13	.20	.20	.20	.20	.20	.20	.20	49	32	5.0	.20	.20
14	.50	.20	.20	.20	.20	.20	.20	68	30	2.0	.20	.20
15	.20	.20	.20	.20	.20	.20	.20	79	29	5.0	.20	.20
16	.20	.20	.20	.20	.20	.20	.20	67	26	2.0	.20	.20
17	.20	.20	1.3	.20	.20	.20	.20	66	25	.50	.20	.20
18	.20	.20	.20	.20	.20	.20	.20	82	25	.50	.20	.20
19	.20	.20	.20	.20	.20	.20	.20	89	26	.50	.20	.20
20	.20	.20	.20	.20	.20	.20	.20	69	36	.50	.20	.20
21	.20	.20	.20	.20	.20	.20	.20	50	32	.50	.20	.20
22	1.4	.20	.20	.20	.20	.20	.20	52	25	.50	.20	.20
23	.20	.20	.20	.20	.20	.20	.20	51	21	.20	.20	.20
24	.20	.20	.20	.20	.20	.20	.20	57	18	.20	.20	.20
25	.20	.20	.20	.20	.20	.20	.20	67	16	1.5	.20	.20
26	.20	.20	.20	.20	.20	.20	.20	65	14	.20	.20	.20
27	.20	.20	.20	.20	.20	.20	.20	64	13	.20	.20	.20
28	.20	.20	.20	.20	.20	.20	.20	60	11	.20	.20	.20
29	.20	.20	.20	.20	---	.20	.20	57	10	.20	.20	.20
30	.20	.20	.20	.20	---	.20	.20	53	8.0	.20	.20	.20
31	.20	---	.20	.20	---	.20	---	56	---	.20	.20	---
TOTAL	7.70	6.00	7.70	6.20	5.60	7.00	6.00	1322.20	918.0	59.10	7.00	6.00
MEAN	.25	.20	.25	.20	.20	.23	.20	42.7	30.6	1.91	.23	.20
MAX	1.4	.20	1.3	.20	.20	1.0	.20	89	57	8.0	1.0	.20
MIN	.20	.20	.20	.20	.20	.20	.20	.20	8.0	.20	.20	.20
AC-FT	15	12	15	12	11	14	12	2620	1820	117	14	12

CAL YR 1974 TOTAL 3738.80 MEAN 10.2 MAX 115 MIN .20 AC-FT 7420
WTR YR 1975 TOTAL 2358.50 MEAN 6.46 MAX 89 MIN .20 AC-FT 4680

10286000 COTTONWOOD CREEK NEAR OLANCHA, CALIF.--Continued

COMBINED DISCHARGE, IN CUBIC FEET PER SECOND, OF COTTONWOOD CREEK AND POWERHOUSE NEAR OLANCHA, CALIF., WATER YEAR OCTOBER 1974 TO SEPTEMBER 1975

DAY	OCT	NOV	DEC	JAN	FEB	MAR	APR	MAY	JUN	JUL	AUG	SEP
1	7.6	9.4	6.8	7.3	5.9	7.6	9.6	14	75	27	10	4.9
2	8.7	10	7.3	7.3	7.0	7.6	9.6	14	72	26	10	4.9
3	9.4	9.4	8.0	7.3	7.0	7.3	10	17	70	24	10	4.2
4	9.0	9.6	8.6	7.3	7.0	7.0	10	18	68	25	10	5.2
5	8.7	9.4	8.6	7.3	7.3	7.6	9.6	18	66	24	9.4	5.2
6	8.7	9.0	9.4	7.3	7.3	7.6	8.7	17	67	23	8.7	5.2
7	11	10	10	7.3	7.3	7.6	9.0	17	64	22	8.2	5.2
8	14	10	8.7	7.3	7.3	7.9	9.4	17	57	21	8.2	6.5
9	13	9.6	8.4	7.3	7.3	8.2	9.4	24	60	21	7.3	10
10	12	9.6	8.4	7.3	7.3	8.4	9.4	28	58	21	7.0	8.7
11	11	9.0	8.4	7.3	7.3	8.7	9.4	36	52	19	6.8	10
12	10	9.0	8.4	7.3	7.3	8.7	9.0	42	53	15	6.5	8.4
13	10	8.4	8.4	7.0	7.6	8.4	9.0	53	52	13	6.2	7.6
14	9.0	8.4	8.4	7.0	8.2	8.2	9.4	72	50	18	6.2	7.3
15	8.7	7.9	8.4	7.0	7.9	8.4	9.0	84	49	14	6.2	7.0
16	8.7	7.9	8.4	7.0	7.6	8.4	8.7	79	46	17	6.2	6.8
17	8.7	7.3	7.8	7.0	7.0	7.9	8.4	80	46	18	6.5	7.3
18	8.7	7.3	7.6	7.0	7.3	8.7	9.6	91	46	17	6.5	7.3
19	8.7	6.8	7.6	7.0	7.3	9.0	9.4	97	46	16	6.8	7.0
20	8.7	6.8	7.6	7.0	7.3	8.7	9.4	87	56	14	7.0	6.8
21	8.7	6.8	7.3	7.0	7.0	8.4	9.6	67	49	14	7.3	6.5
22	8.8	6.8	6.8	7.0	7.0	8.4	10	60	44	14	6.8	6.2
23	8.7	6.8	4.4	7.0	7.0	8.2	10	68	41	14	6.2	5.9
24	8.7	6.8	5.4	7.0	6.8	8.7	11	75	38	13	5.7	5.9
25	9.0	6.8	6.8	7.0	6.8	9.3	12	81	36	12	5.7	5.7
26	8.4	6.8	7.0	7.0	6.8	7.9	13	84	34	12	5.9	5.4
27	9.0	6.8	7.0	6.5	7.3	8.7	13	84	29	12	5.7	5.2
28	9.6	6.8	7.0	4.7	7.3	8.4	14	79	30	12	5.4	4.9
29	8.4	6.8	7.0	5.2	---	9.6	15	76	27	13	5.4	4.9
30	10	6.8	7.0	5.2	---	10	15	73	27	12	5.4	5.4
31	10	---	7.3	5.2	---	10	---	71	---	11	5.2	---
TOTAL	293.6	242.8	238.2	212.4	201.5	259.5	308.6	1723	1508	534	218.4	191.5
MEAN	9.47	8.09	7.68	6.85	7.20	8.37	10.3	55.6	50.3	17.2	7.05	6.38
MAX	14	10	10	7.3	8.2	10	15	97	75	27	10	10
MIN	7.6	6.8	4.4	4.7	5.9	7.0	8.4	14	27	11	5.2	4.2
AC-FT	582	482	472	421	400	515	612	3420	2990	1060	433	380

CAL YR 1974 TOTAL 7916.2 MEAN 21.7 MAX 121 MIN 3.8 AC-FT 15700
WTR YR 1975 TOTAL 5931.5 MEAN 16.3 MAX 97 MIN 4.2 AC-FT 11770

10287000 MONO LAKE NEAR MONO LAKE, CALIF.

LOCATION.--Lat 37°58'46", long 119°08'11", in NW¼ sec.5, T.2 N., R.26 E., Mono County, on west bank 1 mi (2 km) south of town of Mono Lake.

DRAINAGE AREA.--785 mi^2 (2,033 km^2).

PERIOD OF RECORD.--June 1912 to current year. Records prior to September 1934, published in WSP 765.

GAGE.--Nonrecording gage or reference point read once a week. Gage heights prior to October 1944 are converted to elevations above mean sea level in WSP 1314. Gage readings have been reduced to elevations above mean sea level.

EXTREMES.--Period of record: Maximum elevation observed, 6,428.1 ft (1,959.28 m) July 18, 1919, present datum; minimum observed, 6,379.43 ft (1,944.450 m) Sept. 25, 1975.

REMARKS.--Since 1941 water diverted to Owens Lake basin via Mono tunnel, capacity, 200 ft^3/s (5.66 m^3/s).

COOPERATION.--Records furnished by city of Los Angeles, Department of Water and Power.

ELEVATION, IN FEET, WATER YEAR OCTOBER 1974 TO SEPTEMBER 1975

Date	Elevation	Date	Elevation	Date	Elevation	Date	Elevation
Oct. 11	6,380.84	Dec. 26	6,380.58	Mar. 20	6,380.69	June 19	6,380.38
17	6,380.84	Jan. 9	6,380.55	Apr. 4	6,380.72	26	6,380.35
23	6,380.93	14	6,380.55	15	6,380.77	July 17	6,380.10
28	6,380.86	22	6,380.53	23	6,380.74	31	6,379.94
Nov. 20	6,380.82	28	6,380.52	May 7	6,380.69	Aug. 7	6,379.82
26	6,380.63	Feb. 7	6,380.59	12	6,380.67	14	6,379.77
Dec. 5	6,380.81	13	6,380.60	19	6,380.61	Sept. 4	6,379.49
12	6,380.63	20	6,380.64	June 4	6,380.58	15	6,379.48
19	6,380.60	Mar. 6	6,380.68	12	6,380.54	25	6,379.43

10287070 MILL CREEK BELOW LUNDY LAKE, NEAR MONO LAKE, CALIF.

LOCATION.--Lat 38°01'58", long 119°12'53", in SE¼NE¼ sec.16, T.2 N., R.25 E., Mono County, Inyo National Forest, at road crossing 1,500 ft (457 m) downstream from Lundy Lake Dam, and 4.9 mi (7.9 km) northwest of Mono Lake Post Office.

DRAINAGE AREA.--18.1 mi^2 or 46.9 km^2 (natural flow).

PERIOD OF RECORD.--October 1942 to current year. Monthly and yearly mean discharges prior to October 1969, published in WRD Calif. 1971.

GAGE.--Water-stage recorder and Parshall flume on creek. Altitude of gage is 7,760 ft (2,365 m), from topographic map.

AVERAGE DISCHARGE (Actual flow).--34 years, 28.8 ft^3/s (0.816 m^3/s), 20,870 acre-ft/yr (25.7 hm^3/yr).
(Natural flow).--34 years, 30.6 ft^3/s (0.867 m^3/s), 22,170 acre-ft/yr (27.3 hm^3/yr).

EXTREMES (Actual flow).--Current year: Maximum daily discharge, 84 ft^3/s (2.38 m^3/s) July 14-16; no flow many days.
Period of record (1970 to current year): Maximum daily discharge, 117 ft^3/s (3.31 m^3/s) June 14, 1973; no flow many days in 1971 and 1974.

REMARKS.--Flow regulated for power development by Lundy Lake, capacity, 3,820 acre-ft (4.71 hm^3). Records for "actual flow" include Mill Creek, Lundy powerplant tailrace, and Upper Conway ditch. Records for "natural flow" are computed as the "actual flow" plus change in contents and evaporation of Lundy Lake.

COOPERATION.--Records furnished by Southern California Edison Co. and reviewed by Geological Survey, in connection with a Federal Power Commission project.

DISCHARGE, IN CUBIC FEET PER SECOND, WATER YEAR OCTOBER 1974 TO SEPTEMBER 1975
MEAN VALUES

DAY	OCT	NOV	DEC	JAN	FEB	MAR	APR	MAY	JUN	JUL	AUG	SEP
1	7.0	0	5.8	6.7	8.4	7.8	13	14	66	75	72	18
2	7.4	0	5.8	6.7	8.4	7.8	15	14	66	77	72	18
3	4.4	0	5.8	6.7	8.4	7.6	17	14	66	77	71	19
4	4.0	3.1	5.8	6.7	8.3	7.6	17	14	66	78	69	18
5	12	5.7	5.8	6.7	8.2	7.8	17	14	66	78	69	18
6	11	5.7	5.8	6.7	8.2	7.8	17	14	68	79	68	19
7	7.2	5.7	5.8	6.7	8.2	7.8	17	14	68	79	66	19
8	4.2	5.7	5.8	6.7	8.4	7.8	17	14	70	79	64	16
9	0	5.7	5.8	6.7	8.4	7.8	17	14	71	80	64	9.6
10	0	5.7	5.8	6.7	8.4	7.6	17	14	72	81	63	9.2
11	0	5.7	6.4	6.7	8.4	7.6	17	14	73	83	63	9.2
12	0	5.7	6.7	6.7	8.2	7.6	17	17	74	83	62	9.2
13	0	5.7	6.7	6.7	8.0	7.8	17	25	77	83	62	9.2
14	0	5.7	6.7	6.7	8.0	7.8	17	20	78	84	62	9.2
15	0	5.7	6.7	6.7	8.0	7.8	17	22	81	84	52	9.2
16	0	5.7	6.7	7.6	8.0	7.8	17	43	83	84	38	11
17	0	5.7	6.7	8.4	8.0	7.8	17	62	81	83	38	13
18	0	5.7	6.7	8.4	8.0	8.0	14	62	80	83	36	13
19	0	5.7	6.7	8.4	9.0	8.0	13	64	80	81	33	13
20	0	5.7	6.7	8.4	10	8.2	13	64	81	80	30	13
21	0	5.8	6.7	8.4	7.8	8.2	13	64	81	79	30	13
22	0	5.8	6.7	8.4	7.8	8.4	13	66	81	79	29	14
23	0	5.8	6.7	8.4	7.8	8.4	13	66	80	78	29	14
24	0	5.8	6.7	8.4	7.8	8.6	13	66	80	77	29	14
25	0	5.8	6.7	8.4	7.8	8.6	12	66	80	77	29	14
26	0	5.8	6.7	8.4	7.8	8.8	14	66	79	76	24	14
27	0	5.8	6.7	8.4	7.8	11	14	66	79	74	20	14
28	0	5.8	6.7	8.4	7.8	13	14	66	78	75	20	14
29	0	5.8	6.7	8.4	---	13	14	66	77	74	19	14
30	0	5.8	6.7	8.4	---	13	14	66	76	74	18	14
31	0	---	6.7	8.4	---	13	---	66	---	73	18	---
TOTAL	57.2	152.3	198.4	234.1	229.3	269.8	457	1257	2258	2447	1419	411.8
MEAN	1.85	5.08	6.40	7.55	8.19	8.70	15.2	40.5	75.3	78.9	45.8	13.7
MAX	12	5.8	6.7	8.4	10	13	17	66	83	84	72	19
MIN	0	0	5.8	6.7	7.8	7.6	12	14	66	73	18	9.2
AC-FT	113	302	394	464	455	535	906	2490	4480	4850	2810	817
(a)	595	538	515	476	456	541	702	2,700	6,340	4,620	1,570	888

CAL YR 1974 TOTAL 11686.3 MEAN 32.0 MAX 94 MIN 0 AC-FT 23180 a 23,170
WTR YR 1975 TOTAL 9390.9 MEAN 25.7 MAX 84 MIN 0 AC-FT 18630 a 19,940

a Computed natural flow, in acre-feet.

10287290 RUSH CREEK BELOW AGNEW LAKE, NEAR JUNE LAKE, CALIF.

LOCATION.--Lat 37°45'32", long 119°07'47", in NE¼SW¼ sec.20, T.2 S., R.26 E., Mono County, Inyo National Forest, 500 ft (152 m) downstream from Agnew Lake Dam, and 3.4 mi (5.5 km) southwest of town of June Lake.

DRAINAGE AREA.--23.3 mi^2 or 60.3 km^2 (natural flow).

PERIOD OF RECORD.--October 1951 to current year. Monthly and yearly mean discharges prior to October 1969, published in WRD Calif. 1971.

GAGE.--Water-stage recorder and Parshall flume on creek. Altitude of gage is 8,480 ft (2,585 m), from topographic map.

AVERAGE DISCHARGE (Actual flow).--24 years, 55.8 ft^3/s (1.580 m^3/s), 40,430 acre-ft/yr (49.9 hm^3/yr).
(Natural flow).--24 years, 60.7 ft^3/s (1.719 m^3/s), 43,980 acre-ft/yr (54.2 hm^3/yr).

EXTREMES (Actual flow).--Current year: Maximum daily discharge, 117 ft^3/s (3.31 m^3/s) Oct. 23; minimum daily, 8.5 ft^3/s (0.24 m^3/s) Mar. 6.
Period of record (1970 to current year): Maximum daily discharge, 398 ft^3/s (11.3 m^3/s) Aug. 1, 1974; minimum daily, 8.5 ft^3/s (0.24 m^3/s) Mar. 6, 1975.

REMARKS.--Flow regulated for power development by Waugh, Gem, and Agnew Lakes, combined capacity, 23,420 acre-ft (28.9 hm^3) and Rush Creek powerplant. "Actual flow" is total flow of Rush Creek below Agnew Lake and Rush Creek powerplant tailrace. "Natual flow" is the sum of "actual flow", change in contents and evaporation for Waugh, Gem, and Agnew Lakes.

COOPERATION.--Records furnished by Southern California Edison Co. and reviewed by Geological Survey, in connection with a Federal Power Commission project.

DISCHARGE, IN CUBIC FEET PER SECOND, WATER YEAR OCTOBER 1974 TO SEPTEMBER 1975
MEAN VALUES

DAY	OCT	NOV	DEC	JAN	FEB	MAR	APR	MAY	JUN	JUL	AUG	SEP
1	92	87	52	18	18	14	38	34	89	98	92	91
2	91	52	30	20	18	10	44	34	90	98	93	91
3	91	51	21	18	18	12	44	34	90	98	92	91
4	86	51	14	18	16	10	44	34	90	98	92	91
5	86	52	20	18	16	12	44	34	90	99	92	91
6	87	51	20	18	16	8.5	44	34	92	99	92	60
7	86	51	20	18	16	10	44	34	94	98	91	61
8	66	51	20	18	16	10	44	34	92	98	91	51
9	85	51	20	18	16	10	44	34	90	98	91	32
10	88	52	20	18	16	10	43	38	90	99	91	36
11	88	53	20	18	16	10	43	40	90	100	92	33
12	84	54	20	18	16	10	44	44	90	99	92	48
13	84	54	20	18	16	12	43	48	98	97	92	47
14	84	53	20	18	18	12	44	72	112	98	92	48
15	84	54	20	18	24	12	44	77	115	98	92	45
16	84	54	20	18	31	12	34	88	112	96	93	34
17	82	53	20	18	21	12	30	89	109	96	93	36
18	76	53	20	18	21	9.5	17	89	101	95	93	36
19	61	54	20	18	21	12	18	90	97	94	92	31
20	54	53	20	18	19	12	18	89	97	94	93	32
21	86	53	20	18	23	14	23	89	96	94	93	33
22	90	54	20	18	21	26	33	89	98	94	92	30
23	117	54	20	18	18	22	34	89	101	93	93	26
24	87	54	20	18	19	42	34	89	102	92	92	30
25	91	52	20	18	19	54	34	89	92	92	92	29
26	88	52	20	18	19	44	35	89	97	92	93	34
27	88	50	20	28	19	44	35	89	98	93	93	39
28	88	53	20	18	18	52	35	89	98	94	92	39
29	88	53	22	18	---	42	35	89	98	95	91	39
30	87	52	18	18	---	50	34	89	98	93	91	29
31	87	---	26	18	---	32	---	89	---	93	91	---
TOTAL	2636	1611	663	570	525	642.0	1100	2049	2906	2975	2854	1413
MEAN	85.0	53.7	21.4	18.4	18.8	20.7	36.7	66.1	96.9	96.0	92.1	47.1
MAX	117	87	52	28	31	54	44	90	115	100	93	91
MIN	54	50	14	18	16	8.5	17	34	89	92	91	26
AC-FT	5230	3200	1320	1130	1040	1270	2180	4060	5760	5900	5660	2800
(a)	336	264	360	303	488	590	512	10,150	19,060	7,680	1,510	946

CAL YR 1974 TOTAL 26245.0 MEAN 71.9 MAX 398 MIN 14 AC-FT 52060 a 47,690
WTR YR 1975 TOTAL 19944.0 MEAN 54.6 MAX 117 MIN 8.5 AC-FT 39560 a 42,200

a Computed natural flow, in acre-feet.

10287400 RUSH CREEK ABOVE GRANT LAKE, NEAR JUNE LAKE, CALIF.

LOCATION.--Lat 37°48'23", long 119°06'29", in NE¼ sec.4, T.2 S., R.26 E., Mono County, on left bank in narrows, 0.6 mi (1.0 km) upstream from Grant Lake, and 2.7 mi (4.3 km) northwest of town of June Lake.

DRAINAGE AREA.--51.3 mi^2 (132.8 km^2).

PERIOD OF RECORD.--December 1936 to current year. Prior to October 1959 monthly discharge only, published in WSP 1314 and 1734.

GAGE.--Water-stage recorder and Parshall flume. Altitude of gage is 7,200 ft (2,195 m), from topographic map.

AVERAGE DISCHARGE.--38 years (1937-75), 82.1 ft^3/s (2.33 m^3/s), 59,480 acre-ft/yr (73.3 hm^3/yr).

EXTREMES.--Current year: Maximum daily discharge, 255 ft^3/s (7.22 m^3/s) June 15; minimum daily, 25 ft^3/s (0.71 m^3/s) on several days.
Period of record: Maximum discharge, 1,070 ft^3/s (30.3 m^3/s) July 14, 1967 (gage height, 6.20 ft or 1.890 m); minimum daily, 5.5 ft^3/s (0.16 m^3/s) Sept. 6-8, 14, 1954.

REMARKS.--Records poor. Flow regulated by Gem Lake, Lake Agnew, Waugh Lake, combined capacity, 23,400 acre-ft (28.9 hm^3) and by many natural lakes. No diversion above station.

COOPERATION.--Records furnished by city of Los Angeles, Department of Water and Power.

DISCHARGE, IN CUBIC FEET PER SECOND, WATER YEAR OCTOBER 1974 TO SEPTEMBER 1975
MEAN VALUES

DAY	OCT	NOV	DEC	JAN	FEB	MAR	APR	MAY	JUN	JUL	AUG	SEP
1	98	101	59	33	30	30	50	58	203	157	115	97
2	98	75	51	31	36	26	55	60	224	155	114	98
3	97	62	39	31	32	25	57	64	222	151	112	98
4	93	60	38	30	31	25	57	68	219	149	111	97
5	93	59	34	29	31	26	61	64	216	153	109	97
6	93	58	32	30	30	26	60	61	235	161	108	77
7	93	56	31	29	30	25	57	61	246	163	107	69
8	77	56	30	30	30	27	57	61	236	160	106	66
9	86	56	30	29	33	26	57	62	222	160	105	54
10	89	57	30	29	34	26	56	65	215	164	105	54
11	90	58	29	29	33	26	58	74	216	167	105	53
12	90	61	29	29	30	25	56	82	221	164	106	56
13	91	62	28	28	30	25	56	87	224	157	106	61
14	91	62	28	28	30	26	57	109	238	149	105	61
15	91	62	28	28	31	26	56	130	255	144	105	59
16	93	64	28	27	35	26	56	144	252	139	104	54
17	93	64	28	27	39	25	52	149	235	134	104	49
18	86	61	28	27	35	25	39	157	210	131	105	46
19	78	61	28	27	33	25	35	166	188	129	109	45
20	65	62	28	27	31	25	35	164	177	126	106	42
21	70	62	28	27	30	26	37	151	167	129	105	43
22	106	62	28	27	33	36	47	142	168	130	104	42
23	109	61	29	27	30	33	52	138	177	128	102	37
24	101	61	29	27	30	46	56	138	178	126	101	37
25	100	60	29	27	30	64	57	139	159	125	100	39
26	100	60	29	26	30	66	57	157	156	124	100	39
27	99	56	28	27	30	58	56	163	156	125	100	43
28	101	57	31	28	30	60	56	167	157	129	99	45
29	100	59	31	28	---	62	57	171	159	125	98	46
30	99	59	31	28	---	62	58	172	160	119	98	43
31	99	---	32	27	---	56	---	180	---	115	97	---
TOTAL	2869	1854	981	877	887	1085	1600	3604	6091	4388	3251	1747
MEAN	92.5	61.8	31.6	28.3	31.7	35.0	53.3	116	203	142	105	58.2
MAX	109	101	59	33	39	66	61	180	255	167	115	98
MIN	65	56	28	26	30	25	35	58	156	115	97	37
AC-FT	5690	3680	1950	1740	1760	2150	3170	7150	12080	8700	6450	3470

CAL YR 1974 TOTAL 35220 MEAN 96.5 MAX 337 MIN 28 AC-FT 69860
WTR YR 1975 TOTAL 29234 MEAN 80.1 MAX 255 MIN 25 AC-FT 57990

10287900 LEE VINING CREEK NEAR LEE VINING, CALIF.

LOCATION.--Lat 37°55'46", long 119°10'10", in SE¼NW¼SW¼ sec.24, T.1 N., R.25 E., Mono County, on right bank 0.8 mi (1.3 km) upstream from Gibbs Canyon, and 3.3 mi (5.3 km) southwest of Lee Vining.

DRAINAGE AREA.--34.9 mi^2 (90.4 km^2).

PERIOD OF RECORD.--April 1934 to current year. Prior to October 1959 monthly discharge only, published in WSP 1314 and 1734.

GAGE.--Water-stage recorder and partial concrete control. Altitude of gage is 7,400 ft (2,256 m), from topographic map. See WSP 1734 for history of changes prior to Aug. 6, 1944.

AVERAGE DISCHARGE.--41 years, 67.2 ft^3/s (1.903 m^3/s), 48,690 acre-ft/yr (60.0 hm^3/yr).

EXTREMES.--Current year: Maximum daily discharge, 327 ft^3/s (9.26 m^3/s) June 2; minimum daily, 13 ft^3/s (0.37 m^3/s) Feb. 18, 19.
Period of record: Maximum discharge, 590 ft^3/s (16.7 m^3/s) July 4, 1967 (gage height, 4.42 ft or 1.347 m); no flow Nov. 29, 1935.

REMARKS.--Records poor. Flow regulated for power development by Ellery, Saddlebag, and Tioga Lakes, combined capacity, 13,269 acre-ft (16.4 hm^3) and by several small natural lakes. No diversion above station.

COOPERATION.--Records furnished by city of Los Angeles, Department of Water and Power.

DISCHARGE, IN CUBIC FEET PER SECOND, WATER YEAR OCTOBER 1974 TO SEPTEMBER 1975
MEAN VALUES

DAY	OCT	NOV	DEC	JAN	FEB	MAR	APR	MAY	JUN	JUL	AUG	SEP
1	36	44	28	42	42	27	31	39	314	163	67	33
2	40	44	27	35	41	27	28	40	327	177	57	34
3	41	44	26	65	40	29	28	43	300	137	54	29
4	41	45	30	50	48	30	27	43	285	103	51	26
5	40	43	26	46	40	29	31	45	286	151	49	40
6	40	43	26	46	40	28	28	46	314	177	49	57
7	40	44	29	46	61	29	27	39	325	177	48	74
8	51	48	29	46	41	30	28	38	304	177	45	58
9	40	43	33	31	40	28	33	54	288	163	45	72
10	40	42	33	46	40	29	30	54	281	185	51	88
11	40	42	33	60	32	29	28	68	286	185	46	75
12	40	42	30	49	43	28	31	71	316	185	48	76
13	40	36	28	46	40	28	33	92	320	183	49	40
14	33	40	28	44	46	30	33	103	318	145	49	35
15	26	64	28	35	36	29	41	132	323	125	45	34
16	27	50	28	35	22	28	27	124	314	99	51	38
17	27	41	30	41	18	28	38	148	271	95	50	39
18	32	30	30	40	13	28	39	181	204	104	49	33
19	40	29	31	44	13	28	36	189	194	104	51	51
20	62	29	31	43	23	29	30	184	188	109	51	51
21	49	30	31	45	22	30	53	179	185	95	57	51
22	40	29	30	23	35	32	39	163	188	95	69	51
23	40	29	30	43	17	33	31	103	190	94	45	51
24	44	30	34	41	16	33	32	163	188	94	34	34
25	53	29	35	37	16	29	32	186	181	96	34	36
26	53	29	55	44	16	23	40	199	178	74	39	57
27	51	29	45	40	17	23	41	217	150	89	45	39
28	52	28	45	46	17	24	42	242	127	87	34	45
29	52	28	55	38	---	28	43	234	134	81	33	40
30	48	28	42	49	---	28	49	242	145	69	33	40
31	48	---	44	31	---	30	---	270	---	68	33	---
TOTAL	1306	1132	1030	1327	875	884	1029	3931	7424	3886	1461	1427
MEAN	42.1	37.7	33.2	42.8	31.3	28.5	34.3	127	247	125	47.1	47.6
MAX	62	64	55	65	61	33	53	270	327	185	69	88
MIN	26	28	26	23	13	23	27	38	127	68	33	26
AC-FT	2590	2250	2040	2630	1740	1750	2040	7800	14730	7710	2900	2830

CAL YR 1974 TOTAL 29158 MEAN 79.9 MAX 363 MIN 24 AC-FT 57830
WTR YR 1975 TOTAL 25712 MEAN 70.4 MAX 327 MIN 13 AC-FT 51000

11012000 COTTONWOOD CREEK ABOVE TECATE CREEK, NEAR DULZURA, CALIF.

LOCATION.--Lat 32°34'30", long 116°45'11", in NW¼NW¼SW¼ sec.26, T.18 S., R.2 E., San Diego County, on right bank 0.8 mi (1.3 km) upstream from confluence with Tecate Creek, and 5.1 mi (8.2 km) south of Dulzura.

DRAINAGE AREA.--310 mi^2 (803 km^2).

PERIOD OF RECORD.--October 1936 to current year.

GAGE.--Water-stage recorder. Datum of gage is 569.40 ft (173.55 m) above mean sea level (levels by International Boundary and Water Commission).

AVERAGE DISCHARGE.--39 years, 6.00 ft^3/s (0.170 m^3/s), 4,350 acre-ft/yr (5.36 hm^3/yr).

EXTREMES.--Current year: Maximum discharge, 9.8 ft^3/s (0.278 m^3/s) Mar. 11 (gage height, 2.23 ft or 0.680 m); no flow most of year.
Period of record: Maximum discharge, 4,340 ft^3/s (123 m^3/s) Feb. 7, 1937 (gage height, 9.65 ft or 2.941 m), from rating curve extended above 1,500 ft^3/s (42.5 m^3/s); no flow for part of each year.

REMARKS.--Records fair. Flow regulated by Morena Reservoir, capacity, 50,120 acre-ft (61.9 hm^3) and Barrett Reservoir, capacity, 44,760 acre-ft (55.2 hm^3). Water released from Barrett Reservoir through Dulzura conduit is diverted to Lower Otay Reservoir.

DISCHARGE, IN CUBIC FEET PER SECOND, WATER YEAR OCTOBER 1974 TO SEPTEMBER 1975
MEAN VALUES

DAY	OCT	NOV	DEC	JAN	FEB	MAR	APR	MAY	JUN	JUL	AUG	SEP
1						0	.95	.56				
2						0	.88	.51				
3						0	.76	.43				
4						0	.65	.36				
5						0	.76	.36				
6						.08	1.4	.32				
7						.26	2.3	.23				
8						.23	2.4	.14				
9						.76	4.6	.09				
10						.71	4.4	.04				
11						4.3	3.6	.02				
12						2.8	3.1	.01				
13						1.7	2.6	0				
14						2.1	2.3	0				
15						1.7	2.2	0				
16						1.4	1.9	0				
17						1.2	2.3	0				
18						1.0	2.2	0				
19						.82	1.8	0				
20						.76	1.6	0				
21						.61	1.4	0				
22						.95	1.3	0				
23						1.1	1.2	0				
24						.76	1.1	0				
25						.88	1.0	0				
26						1.6	1.0	0				
27						1.2	.88	0				
28						.95	.82	0				
29					---	.82	.76	0				
30					---	.76	.65	0				
31		---			---	.82	---	0	---			---
TOTAL	0	0	0	0	0	30.27	52.81	3.07	0	0	0	0
MEAN	0	0	0	0	0	.98	1.76	.099	0	0	0	0
MAX	0	0	0	0	0	4.3	4.6	.56	0	0	0	0
MIN	0	0	0	0	0	0	.65	0	0	0	0	0
AC-FT	0	0	0	0	0	60	105	6.1	0	0	0	0

CAL YR 1974 TOTAL 22.33 MEAN .061 MAX 4.2 MIN 0 AC-FT 44
WTR YR 1975 TOTAL 96.15 MEAN .24 MAX 4.6 MIN 0 AC-FT 171

11012500 CAMPO CREEK NEAR CAMPO, CALIF.

LOCATION.--Lat 32°35'28", long 116°31'29", in SW¼NE¼SE¼ sec.24, T.18 S., R.4 E., San Diego County, on left bank just upstream from bridge on State Highway 94, 3.5 mi (5.6 km) southwest of Campo.

DRAINAGE AREA.--85.0 mi^2 (220.2 km^2), of which 3 mi^2 (8 km^2) are in Mexico.

PERIOD OF RECORD.--October 1936 to current year.

GAGE.--Water-stage recorder and broad-crested weir. Datum of gage is 2,178.92 ft (664.135 m) above mean sea level. Prior to Dec. 1, 1954, at datum 1 ft (0.3 m) higher.

AVERAGE DISCHARGE.--39 years, 1.63 ft^3/s (0.0462 m^3/s), 1,180 acre-ft/yr (1.45 hm^3/yr).

EXTREMES.--Current year: Maximum discharge, 1.7 ft^3/s (0.048 m^3/s) Mar. 11 (gage height, 1.41 ft or 0.430 m); no flow for part of year.
Period of record: Maximum discharge, 880 ft^3/s (24.9 m^3/s) Feb. 6, 1937 (gage height, 4.80 ft or 1.463 m, present datum), from rating curve extended above 110 ft^3/s (3.12 m^3/s) on basis of velocity mean-depth relation and cross-sectional area at control; no flow for part of most years.

REMARKS.--Records fair. Flow partly regulated by small conservation reservoir since August 1956. No diversion above station.

DISCHARGE, IN CUBIC FEET PER SECOND, WATER YEAR OCTOBER 1974 TO SEPTEMBER 1975
MEAN VALUES

DAY	OCT	NOV	DEC	JAN	FEB	MAR	APR	MAY	JUN	JUL	AUG	SEP
1	0	.04	.01	.01	.02	.02	.08	.04	.02	.05	.01	0
2	0	.01	.01	.01	.01	.03	.07	.04	.02	.05	.01	0
3	0	0	.01	.01	.04	.03	.08	.04	.02	.11	0	0
4	0	0	.07	.01	.01	.05	.08	.06	.02	.31	0	0
5	0	0	.04	.01	.01	.05	.07	.06	.02	.20	0	0
6	0	0	.04	.01	0	.03	.11	.06	.02	.02	0	0
7	0	0	.04	.01	0	.02	.08	.07	.02	.02	0	.15
8	0	0	.04	.01	0	.06	.08	.07	.02	.03	0	.13
9	0	0	.03	.02	.01	.02	.10	.05	.02	.03	.02	.09
10	0	0	.03	.01	.01	.07	.07	.04	.02	.03	.01	.01
11	0	0	.03	0	.01	.17	.07	.03	.01	.03	.01	0
12	0	0	.02	0	0	.06	.07	.03	.01	.02	.01	0
13	0	0	.01	.01	.01	.03	.07	.03	.01	.02	.01	0
14	0	.01	.01	.01	.01	.07	.07	.04	.01	.02	0	0
15	0	.01	.01	.01	.01	.03	.08	.07	.01	.02	0	0
16	0	.01	.01	.01	.01	.03	.09	.07	.01	.02	0	0
17	0	.01	.01	.01	.01	.03	.09	.05	.02	.02	0	0
18	0	.01	.01	0	.01	.04	.05	.05	.03	.03	0	0
19	.01	.01	.01	0	0	.05	.05	.05	.02	.02	0	0
20	.01	.01	.01	0	.01	.06	.04	.07	.03	.02	0	0
21	.02	.01	.01	.01	.01	.06	.05	.07	.02	.02	0	0
22	.02	.01	.01	0	0	.09	.07	.05	.05	.02	0	0
23	.02	.01	.01	.01	0	.07	.07	.05	.05	.01	0	0
24	.02	.01	.01	.01	0	.07	.07	.03	.03	.01	0	0
25	.02	.01	.01	.01	.01	.07	.09	.03	.03	.01	0	0
26	.01	.01	.02	.01	.02	.08	.08	.03	.03	.01	0	0
27	.02	.01	.03	.01	.02	.05	.07	.03	.07	.01	0	0
28	.03	.01	.04	.02	.02	.05	.04	.03	.07	.01	0	0
29	.06	.01	.03	.02	---	.05	.04	.03	.05	.01	0	0
30	.03	.01	.02	.02	---	.05	.04	.03	.05	.01	0	0
31	.03	---	.02	.02	---	.07	---	.02	---	.01	0	---
TOTAL	.30	.22	.66	.30	.27	1.66	2.12	1.42	.81	1.20	.08	.38
MEAN	.01	.007	.02	.01	.01	.05	.07	.04	.02	.03	.003	.01
MAX	.06	.04	.07	.02	.04	.17	.11	.07	.07	.31	.02	.15
MIN	0	0	.01	0	0	.02	.04	.02	.01	.01	0	0
AC-FT	.6	.4	1.3	.6	.5	3.3	4.2	2.8	1.6	2.4	.2	.8

CAL YR 1974 TOTAL 13.59 MEAN .037 MAX .62 MIN 0 AC-FT 27
WTR YR 1975 TOTAL 9.42 MEAN .026 MAX .31 MIN 0 AC-FT 19

Peak discharge (base, 20 ft^3/s).--No peak above base.

11013000 TIJUANA RIVER NEAR DULZURA, CALIF.

LOCATION.--Lat 32°33'56", long 116°46'27", in E½ sec.33, T.18 S., R.2 E., San Diego County, on left bank 0.5 mi (0.8 km) downstream from confluence of Cottonwood and Tecate Creeks, and 5.5 mi (8.8 km) south of Dulzura.

DRAINAGE AREA.--481 mi^2 (1,246 km^2), of which 70 mi^2 (181 km^2) are in Mexico.

PERIOD OF RECORD.--October 1936 to current year.

GAGE.--Water-stage recorder. Datum of gage is 542.42 ft (165.330 m) above mean sea level (levels by International Boundary and Water Commission). Prior to Sept. 19, 1939, at datum 2.00 ft (0.610 m) higher.

AVERAGE DISCHARGE.--39 years, 9.64 ft^3/s (0.273 m^3/s), 6,980 acre-ft/yr (8.61 hm^3/yr).

EXTREMES.--Current year: Maximum discharge, 28 ft^3/s (0.79 m^3/s) Mar. 11 (gage height, 2.88 ft or 0.878 m); minimum daily, 0.06 ft^3/s (0.002 m^3/s) Sept. 23, 24.
Period of record: Maximum discharge, 4,700 ft^3/s (133 m^3/s) Feb. 7, 1937 (gage height, 8.50 ft or 2.591 m, present datum), from rating curve extended above 300 ft^3/s (8.50 m^3/s) on basis of velocity, mean-depth, and area studies; no flow for part of most years.

REMARKS.--Records good. Flow regulated by Morena Reservoir, capacity, 50,210 acre-ft (61.9 hm^3) and Barrett Reservoir, capacity, 44,760 acre-ft (55.2 hm^3). Water diverted from Cottonwood Creek at Barrett Dam by Dulzura conduit to Jamul Creek.

DISCHARGE, IN CUBIC FEET PER SECOND, WATER YEAR OCTOBER 1974 TO SEPTEMBER 1975
MEAN VALUES

DAY	OCT	NOV	DEC	JAN	FEB	MAR	APR	MAY	JUN	JUL	AUG	SEP
1	.13	.34	.18	1.0	1.2	.78	1.5	.43	.23	.17	.10	.16
2	.13	.39	.18	1.0	1.2	.79	1.5	.37	.23	.17	.10	.16
3	.12	.34	.18	1.0	1.2	.77	1.4	.36	.23	.18	.11	.16
4	.11	.29	1.0	1.2	1.3	.75	1.1	.34	.23	.17	.11	.17
5	.11	.29	1.4	1.2	1.4	.61	.55	.32	.22	.16	.11	.17
6	.13	.29	1.6	1.1	1.3	.94	.74	.29	.23	.16	.11	.17
7	.12	.29	1.5	1.1	1.3	.94	1.8	.28	.23	.16	.10	.19
8	.15	.25	1.3	1.1	1.3	1.1	2.2	.28	.22	.18	.10	.18
9	.12	.18	.84	1.4	1.4	1.5	7.4	.26	.23	.16	.11	.18
10	.12	.18	.88	1.4	1.5	1.4	9.8	.26	.21	.15	.12	.18
11	.12	.18	1.4	1.4	1.4	12	6.2	.26	.21	.15	.11	.16
12	.12	.16	1.4	1.3	1.3	14	4.3	.26	.22	.15	.12	.17
13	.12	.15	1.3	1.1	1.4	3.6	3.3	.25	.23	.15	.12	.16
14	.12	.15	1.4	1.1	1.1	5.3	2.6	.25	.22	.15	.12	.17
15	.10	.15	1.0	1.1	.97	4.2	2.0	.26	.19	.14	.11	.17
16	.10	.15	.98	1.3	1.0	2.5	1.4	.24	.19	.14	.11	.16
17	.10	.15	1.4	1.3	.95	1.9	2.0	.24	.18	.16	.11	.15
18	.10	.21	1.3	1.2	.83	1.6	2.5	.23	.19	.17	.13	.14
19	.10	.44	1.3	1.1	.81	1.5	1.9	.23	.18	.16	.13	.13
20	.12	.69	1.4	1.0	.75	1.5	1.6	.26	.18	.14	.13	.13
21	.12	.44	1.5	1.1	.63	1.3	1.4	.24	.17	.14	.12	.12
22	.12	.21	1.4	.92	.64	1.5	1.3	.24	.16	.14	.12	.07
23	.12	.21	1.3	.86	.78	1.7	1.2	.23	.16	.13	.11	.06
24	.12	.21	1.4	.84	.77	1.2	1.1	.23	.16	.13	.12	.06
25	.12	.18	1.2	.83	.71	1.2	.98	.23	.16	.12	.12	.07
26	.15	.15	1.1	.93	.67	2.0	.90	.22	.15	.13	.13	.07
27	.15	.10	1.1	.98	.74	2.0	.74	.22	.15	.12	.12	.07
28	.19	.15	1.5	1.0	.74	1.6	.61	.21	.16	.12	.12	.08
29	.41	.17	1.6	1.1	---	1.4	.54	.23	.16	.11	.14	.08
30	.39	.19	1.3	1.1	---	1.4	.49	.23	.17	.11	.14	.08
31	.39	---	1.1	1.2	---	1.3	---	.22	---	.11	.15	---
TOTAL	4.62	7.28	36.44	34.26	29.29	74.28	65.05	8.17	5.85	4.53	3.65	4.02
MEAN	.15	.24	1.18	1.11	1.05	2.40	2.17	.26	.20	.15	.12	.13
MAX	.41	.69	1.6	1.4	1.5	14	9.8	.43	.23	.18	.15	.19
MIN	.10	.10	.18	.83	.63	.61	.49	.21	.15	.11	.10	.06
AC-FT	9.2	14	72	68	58	147	129	16	12	9.0	7.2	8.0

CAL YR 1974 TOTAL 288.38 MEAN .79 MAX 7.0 MIN 0 AC-FT 572
WTR YR 1975 TOTAL 277.44 MEAN .76 MAX 14 MIN .06 AC-FT 550

11013200 RODRIGUEZ RESERVOIR AT RODRIGUEZ DAM, BAJA CALIFORNIA, MEXICO

LOCATION.--Lat 32°26'40", long 116°54'25", Baja California, Mexico, at Rodriguez Dam on Rio de las Palmas, 0.2 mi (0.3 km) upstream from Arroyo Matanuco, and 10 mi (16 km) southeast of Tijuana.

DRAINAGE AREA.--977 mi^2 (2,530 km^2), of which 10 mi^2 (26 km^2) are in the United States.

PERIOD OF RECORD.--April 1937 to current year. Published with record for Tijuana River near Nestor, Calif., October 1953 to September 1957. Monthend contents for April 1937 to September 1950 published in WSP 1315-B and for October 1950 to September 1960 in WSP 1735.

GAGE.--Nonrecording gage read once a day. Datum of gage is at mean sea level (levels by National Irrigation Commission, Mexico).

EXTREMES.--Current year: Maximum contents, 4,030 acre-ft (4.97 hm^3) Mar. 14-16; minimum, 2,770 acre-ft (3.42 hm^3) Sept. 30.
Period of record: Reservoir spilled during March 1938, September 1940, February to May 1941, March 1942, and February, March 1944; reservoir dry Apr. 2, 1964, to Apr. 9, 1965, Aug. 21 to Nov. 22, 1965.

REMARKS.--Reservoir is formed by thin-shell concrete-arch dam completed in 1936; storage began in 1937. Capacity table is based on surveys made in 1927. Maximum storage at crest of spillway gates, elevation, 410.10 ft (124.998 m), 111,070 acre-ft (137 hm^3); at spillway lip, elevation, 380.08 ft (115.848 m), 74,580 acre-ft (92.0 hm^3); dead storage below outlet, elevation, 267.39 ft (81.500 m), 1,650 acre-ft (2.03 hm^3) included in contents. Reservoir stores water for irrigation of 3,000 acres (12.1 km^2) on both banks 0.5 to 5.5 mi (0.8 to 8.8 km) downstream and municipal supply for city of Tijuana. Since August 1972 Colorado River water diverted through Otay aqueduct into the reservoir for Tijuana emergency use; this year 882 acre-ft (1.09 hm^3) was imported.

COOPERATION.--Records furnished by Ministry of Hydraulic Resources, Government of Mexico, through International Boundary and Water Commission, United States section.

MONTHEND CONTENTS, WATER YEAR OCTOBER 1974 TO SEPTEMBER 1975

Date	Contents (acre-feet)	Change in contents (acre-feet)
Sept. 30	3,580	--
Oct. 31	3,650	+70
Nov. 30	3,710	+60
Dec. 31	3,810	+100
CAL YR 1974	--	+760
Jan. 31	3,890	+80
Feb. 28	3,960	+70
Mar. 31	3,990	+30
Apr. 30	3,970	-20
May 31	3,860	-110
June 30	3,710	-150
July 31	3,460	-250
Aug. 31	3,150	-310
Sept. 30	2,760	-390
WTR YR 1975	--	-820

11013500 TIJUANA RIVER NEAR NESTOR, CALIF.

LOCATION.--Lat 32°33'06", long 117°05'00", on line between secs.3 and 4, T.19 S., R.2 W., San Diego County, on downstream side of county highway bridge, 1.7 mi (2.7 km) south of Nestor, and 2.9 mi (4.7 km) upstream from mouth.

DRAINAGE AREA.--1,695 mi^2 (4,390 km^2), of which 1,236 mi^2 (3,201 km^2) are in Mexico.

PERIOD OF RECORD.--October 1914 to September 1915, October 1936 to current year.

GAGE.--Water-stage recorder. Datum of gage is 15.14 ft (4.615 m) above mean sea level. See WSP 1735 for history of changes prior to Aug. 5, 1958.

AVERAGE DISCHARGE.--40 years, 28.1 ft^3/s (0.796 m^3/s), 20,340 acre-ft/yr (25.1 hm^3/yr).

EXTREMES.--Current year: Maximum discharge, 20 ft^3/s (0.57 m^3/s) Apr. 9 (gage height, 3.06 ft or 0.933 m); no flow most of year.

Period of record (1936 to current year): Maximum discharge, 17,700 ft^3/s (501 m^3/s) Feb. 7, 1937 (gage height, 8.20 ft or 2.499 m, datum then in use), from rating curve extended above 2,000 ft^3/s (56.6 m^3/s) on basis of velocity-depth relation and cross section after peak; no flow parts of each year.

REMARKS.--Records good. Flow regulated by Morena Reservoir, capacity, 50,210 acre-ft (61.9 hm^3) and Barrett Reservoir, capacity, 44,760 acre-ft (55.2 hm^3) in the United States, and Rodriguez Reservoir (see sta 11013200) in Mexico. Water diverted from Cottonwood Creek at Barrett Dam by Dulzura conduit to Jamul Creek. AVERAGE DISCHARGE represents flow to the ocean regardless of upstream development.

DISCHARGE, IN CUBIC FEET PER SECOND, WATER YEAR OCTOBER 1974 TO SEPTEMBER 1975

DAY	OCT	NOV	DEC	JAN	FEB	MAR	APR	MAY	JUN	JUL	AUG	SEP
1												
2						0	0					
3						0	0					
4						0	0					
5						0	0					
6						0	0					
7						0	0					
8						0	3.0					
9						.20	.01					
10						.01	12					
11						2.1	.37					
12						4.0	0					
13						1.5	0					
14						0	0					
15						1.5	0					
16						.25	0					
17						0	0					
18						0	0					
19						0	0					
20						0	0					
21						0	0					
22						0	0					
23						0	0					
24						0	0					
25						0	0					
26						0	0					
27						0	0					
28						0	0					
29						0	0					
30				------		0	0					
31		------		------		0	------		------			------
TOTAL	0	0	0	0	0	9.56	15.58	0	0	0	0	0
MEAN	0	0	0	0	0	.31	.52	0	0	0	0	0
MAX	0	0	0	0	0	4.0	12	0	0	0	0	0
MIN	0	0	0	0	0	0	0	0	0	0	0	0
AC-FT	0	0	0	0	0	19	31	0	0	0	0	0

CAL YR 1974 TOTAL 27.37 MEAN .075 MAX 16 MIN 0 AC-FT 54
WTR YR 1975 TOTAL 25.14 MEAN .069 MAX 12 MIN 0 AC-FT 50

11013500 TIJUANA RIVER NEAR NESTOR, CALIF.--Continued

PERIOD OF RECORD.--Water temperatures: October 1969 to September 1972.
Sediment records: October 1969 to current year.

EXTREMES.--Current year:
Sediment concentrations: Maximum daily, 1,980 mg/l Apr. 9; minimum daily, no flow for many days.
Sediment discharge: Maximum daily, 85 tons (77 tonnes) Apr. 9; minimum daily, 0 tons (0 tonnes) on many days.
Period of record:
Sediment concentrations: Maximum daily, 4,190 mg/l Dec. 21, 1970; minimum daily, no flow for many days each year.
Sediment discharge: Maximum daily, 191 tons (173 tonnes) Feb. 13, 1973; minimum daily, 0 tons (0 tonnes) on many days each year.

REMARKS.--Sediment table omitted for no flow periods October to December and July to September.

SUSPENDED-SEDIMENT DISCHARGE (TONS/DAY), WATER YEAR OCTOBER 1974 TO SEPTEMBER 1975

	JANUARY			FEBRUARY			MARCH		
DAY	MEAN DISCHARGE (CFS)	MEAN CONCEN-TRATION (MG/L)	SEDIMENT DISCHARGE (TONS/DAY)	MEAN DISCHARGE (CFS)	MEAN CONCEN-TRATION (MG/L)	SEDIMENT DISCHARGE (TONS/DAY)	MEAN DISCHARGE (CFS)	MEAN CONCEN-TRATION (MG/L)	SEDIMENT DISCHARGE (TONS/DAY)
1							0	0	0
2							0	0	0
3							0	0	0
4							0	0	0
5							0	0	0
6							0	0	0
7							0	0	0
8							.20	290	.64
9							.01	60	.02
10							2.1	530	13
11							4.0	1810	21
12							1.5	930	7.6
13							0	0	0
14							1.5	920	6.5
15							.25	440	.73
16							0	0	0
17							0	0	0
18							0	0	0
19							0	0	0
20							0	0	0
21							0	0	0
22							0	0	0
23							0	0	0
24							0	0	0
25							0	0	0
26							0	0	0
27							0	0	0
28							0	0	0
29							0	0	0
30							0	0	0
31							0	0	0
TOTAL	0	0	0	0	0	0	9.56	---	49.49

11013500 TIJUANA RIVER NEAR NESTOR, CALIF.--Continued

SUSPENDED-SEDIMENT DISCHARGE (TONS/DAY), WATER YEAR OCTOBER 1974 TO SEPTEMBER 1975

	APRIL			MAY			JUNE		
DAY	MEAN DISCHARGE (CFS)	MEAN CONCEN-TRATION (MG/L)	SEDIMENT DISCHARGE (TONS/DAY)	MEAN DISCHARGE (CFS)	MEAN CONCEN-TRATION (MG/L)	SEDIMENT DISCHARGE (TONS/DAY)	MEAN DISCHARGE (CFS)	MEAN CONCEN-TRATION (MG/L)	SEDIMENT DISCHARGE (TONS/DAY)
1	0	0	0						
2	0	0	0						
3	0	0	0						
4	0	0	0						
5	0	0	0						
6	0	0	0						
7	3.0	1410	15						
8	.01	85	.01						
9	12	1980	85						
10	.57	750	2.6						
11	0	0	0						
12	0	0	0						
13	0	0	0						
14	0	0	0						
15	0	0	0						
16	0	0	0						
17	0	0	0						
18	0	0	0						
19	0	0	0						
20	0	0	0						
21	0	0	0						
22	0	0	0						
23	0	0	0						
24	0	0	0						
25	0	0	0						
26	0	0	0						
27	0	0	0						
28	0	0	0						
29	0	0	0						
30	0	0	0						
31	---	---	---						
TOTAL	15.58	---	102.61	0	0	0	0	0	0
YEAR	25.14		152.10						

PARTICLE-SIZE DISTRIBUTION OF SUSPENDED SEDIMENT, WATER YEAR OCTOBER 1974 TO SEPTEMBER 1975

DATE	TIME	TEMPER-ATURE (DEG C)	INSTAN-TANEOUS DIS-CHARGE (CFS)	SUS-PENDED SEDI-MENT (MG/L)	SUS-PENDED SEDI-MENT DIS-CHARGE (T/DAY)	SUS. SED. FALL DIAM. % FINER THAN .002 MM	SUS. SED. FALL DIAM. % FINER THAN .004 MM	SUS. SED. FALL DIAM. % FINER THAN .008 MM
APR.								
09...	1050	13.0	19	2690	138	97	99	100
10...	1130	14.0	.05	701	.09	88	92	92

DATE	SUS. SED. FALL DIAM. % FINER THAN .016 MM	SUS. SED. FALL DIAM. % FINER THAN .031 MM	SUS. SED. SIEVE DIAM. % FINER THAN .062 MM	SUS. SED. SIEVE DIAM. % FINER THAN .125 MM	SUS. SED. SIEVE DIAM. % FINER THAN .250 MM	SUS. SED. SIEVE DIAM. % FINER THAN .500 MM	SUS. SED. SIEVE DIAM. % FINER THAN 1.00 MM
APR.							
09...	--	--	--	--	--	--	--
10...	92	92	92	92	93	96	100

11014000 JAMUL CREEK NEAR JAMUL, CALIF.

LOCATION.--Lat 32°38'15", long 116°53'00", in NE¼ sec.4, T.18 S., R.1 E., San Diego County, on right bank 300 ft (91 m) upstream from county road crossing at upper end of Lower Otay Reservoir, 1.4 mi (2.3 km) downstream from Dulzura Creek, and 5.5 mi (8.8 km) south of Jamul.

DRAINAGE AREA.--70.2 mi^2 (181.8 km^2).

PERIOD OF RECORD.--April 1940 to current year.

GAGE.--Water-stage recorder and broad-crested weir control with low-water Parshall flume. Datum of gage is 511.64 ft (155.948 m) above mean sea level. Prior to Oct. 1, 1951, at datum 1.00 ft (0.305 m) higher.

EXTREMES.--Current year: Maximum discharge, 13 ft^3/s (0.37 m^3/s) Apr. 10 (gage height, 1.62 ft or 0.494 m); no flow Oct. 1 to Mar. 9, May 30 to Sept. 30.
Period of record: Maximum discharge, 4,000 ft^3/s (113 m^3/s) Dec. 1, 1947 (gage height, 6.42 ft or 1.957 m, present datum), from rating curve extended above 1,200 ft^3/s (34.0 m^3/s); no flow at times in some years.

REMARKS.--Records fair. No regulation above station. Water diverted from Cottonwood Creek by Dulzura conduit discharges into Jamul Creek via Dulzura Creek and is included in discharge for this station (see sta 11012000).

DISCHARGE, IN CUBIC FEET PER SECOND, WATER YEAR OCTOBER 1974 TO SEPTEMBER 1975
MEAN VALUES

DAY	OCT	NOV	DEC	JAN	FEB	MAR	APR	MAY	JUN	JUL	AUG	SEP
1						0	5.5	2.5				
2						0	5.0	1.5				
3						0	4.2	.65				
4						0	3.5	.72				
5						0	3.1	.65				
6						0	5.9	1.0				
7						0	6.3	1.6				
8						0	6.5	1.5				
9						0	9.4	1.3				
10						.14	12	1.2				
11						1.5	13	1.1				
12						.70	12	.94				
13						.32	10	.73				
14						.56	10	.61				
15						.33	11	.24				
16						.28	9.6	.16				
17						.24	9.6	.16				
18						.24	9.7	.16				
19						.24	9.9	.20				
20						.24	10	.20				
21						.24	9.1	.16				
22						.24	8.7	.12				
23						.18	7.9	.10				
24						.16	7.3	.08				
25						.16	6.7	.06				
26						.16	5.6	.04				
27						.16	4.8	.03				
28						.10	3.4	.02				
29					---	.10	3.1	.01				
30					---	.32	2.8	0				
31		---			---	5.7	---	0	---			---
TOTAL	0	0	0	0	0	12.31	225.6	17.74	0	0	0	0
MEAN	0	0	0	0	0	.40	7.52	.57	0	0	0	0
MAX	0	0	0	0	0	5.7	13	2.5	0	0	0	0
MIN	0	0	0	0	0	0	2.8	0	0	0	0	0
AC-FT	0	0	0	0	0	24	447	35	0	0	0	0

CAL YR 1974 TOTAL 257.61 MEAN .71 MAX 20 MIN 0 AC-FT 511
WTR YR 1975 TOTAL 255.65 MEAN .70 MAX 13 MIN 0 AC-FT 507

NOTE.--No gage-height record Dec. 13 to Jan. 16, May 19 to June 24.

11014550 LOWER OTAY RESERVOIR NEAR CHULA VISTA, CALIF.

LOCATION.--Lat 32°36'35", long 116°55'35", in NW¼NW¼ sec.18, T.18 S., R.1 E., San Diego County, on upstream face 200 ft (61 m) from right end of Savage Dam on Otay River, and 9 mi (14 km) east of Chula Vista.

DRAINAGE AREA.--99.0 mi^2 (256.4 km^2).

PERIOD OF RECORD.--October 1945 to September 1959 published with Otay River at Savage Dam (sta 11014500). October 1972 to current year. Records of monthend gage heights October 1936 to September 1945, in files of San Diego County Department of Sanitation and Flood Control.

GAGE.--Water-stage recorder. Datum of gage is 397.20 ft (121.067 m) above mean sea level; gage readings have been reduced to elevations above mean sea level. Prior to Oct. 1, 1972, nonrecording gage at different site at datum 50.00 ft (15.240 m) lower.

EXTREMES.--Current year: Maximum contents observed, 6,180 acre-ft (7.62 hm^3) Apr. 30 (elevation, 419.14 ft or 127.754 m); minimum, 5,240 acre-ft (6.46 hm^3) Sept. 30 (elevation, 416.05 ft or 126.812 m).
Period of record (1945-59, 1972 to current year): Maximum contents, 48,200 acre-ft (59.4 hm^3) Oct. 31, 1945 (elevation, 493.87 ft or 150.532 m); minimum, 3,160 acre-ft (3.90 hm^3) Dec. 31, 1951 (elevation, 407.56 ft or 124.224 m).

REMARKS.--Reservoir is formed by gravity section cyclopean concrete and masonary dam, built in 1919. Capacity from Geological Survey table dated Apr. 3, 1956. Maximum capacity at top of spillway gates, 56,520 acre-ft (69.7 hm^3), elevation, 490.70 ft (149.565 m). Capacity at permanent spillway level, 49,510 acre-ft (61.0 hm^3), elevation, 484.70 ft (147.737 m). Dead storage below lowest outlet, 1,150 acre-ft (1.42 hm^3), elevation, 395.05 ft (120.411 m). Dulzura conduit carries water from Barrett Reservoir on Cottonwood Creek to Dulzura Creek, where water is carried to the reservoir by Jamul Creek (11014000). Reservoir storage includes supplemental Colorado River water. Small diversions for local use near reservoir. Water used for municipal supply by city of San Diego.

COOPERATION.--Gage heights furnished by San Diego County Department of Sanitation and Flood Control.

MONTHEND ELEVATION AND CONTENTS, WATER YEAR OCTOBER 1974 TO SEPTEMBER 1975

Date	Elevation (feet)a	Contents (acre-feet)	Change in contents (acre-feet)
Sept. 30	418.10	5,850	--
Oct. 31	417.63	5,710	-140
Nov. 30	418.63	6,020	+310
Dec. 31	418.43	5,950	-70
CAL YR 1974	--	--	-4,060
Jan. 31	418.00	5,820	-130
Feb. 28	418.06	5,840	+20
Mar. 31	418.00	5,820	-20
Apr. 30	419.14	6,180	+360
May 31	418.70	6,040	-140
June 30	418.09	5,850	-190
July 31	417.33	5,620	-230
Aug. 31	416.55	5,390	-230
Sept. 30	416.05	5,240	-150
WTR YR 1975	--	--	-610

a Elevation at 0800.

11015000 SWEETWATER RIVER NEAR DESCANSO, CALIF.

LOCATION.--Lat 32°50'05", long 116°37'20", in NW¼SE¼ sec.25, T.15 S., R.3 E., San Diego County, on right bank at county road bridge, 0.7 mi (1.1 km) downstream from unnamed tributary, and 1.3 mi (2.1 km) south of Descanso.

DRAINAGE AREA.--45.4 mi^2 (117.6 km^2).

PERIOD OF RECORD.--October 1905 to September 1927, October 1956 to current year. Monthly discharge only for October to December 1905, January to February 1916, February, March, June to September 1927, published in WSP 1315-B. Combined records of river and diversion, October 1956 to current year.

GAGE.--Water-stage recorder on river; water-stage recorder on concrete diversion. Datum of gage is 3,269.24 ft (996.464 m) above mean sea level. Prior to June 25, 1927, nonrecording gages at several sites within 0.1 mi (0.2 km) upstream at various datums.

AVERAGE DISCHARGE (Creek only).--41 years, 10.1 ft^3/s (0.286 m^3/s), 7,320 acre-ft/yr (9.03 hm^3/yr).
(Combined).--19 years, 3.71 ft^3/s (0.105 m^3/s), 2,690 acre-ft/yr (3.32 hm^3/yr).

EXTREMES (Creek only).--Current year: Maximum discharge, 14 ft^3/s (0.40 m^3/s) Apr. 9 (gage height, 3.69 ft or 1.125 m); no flow Oct. 1-27, July 25 to Sept. 30.
Period of record: Maximum discharge, 11,200 ft^3/s (317 m^3/s) Feb. 16, 1927 (gage height, 13.2 ft or 4.023 m, from floodmarks, site and datum then in use), on basis of slope-area measurement of maximum flow; no flow many days in most years.
(Combined).--Current year: Maximum discharge, 14 ft^3/s (0.40 m^3/s) Apr. 9; no flow Oct. 1-27, Aug. 1 to Sept. 30.
Period of record: Maximum discharge, 3,890 ft^3/s (110 m^3/s) Dec. 6, 1966; no flow many days in each year.

REMARKS.--Records good. No regulation above station. Sweetwater River diversion diverts 0.3 mi (0.5 km) above station for irrigation below. No diversion since Oct. 12, 1973.

DISCHARGE, IN CUBIC FEET PER SECOND, WATER YEAR OCTOBER 1974 TO SEPTEMBER 1975
MEAN VALUES

DAY	OCT	NOV	DEC	JAN	FEB	MAR	APR	MAY	JUN	JUL	AUG	SEP
1	0	.79	.29	.47	.65	.52	4.4	3.8	.95	.47		
2	0	1.2	.29	.42	.65	.47	4.0	3.8	.95	.47		
3	0	.87	.33	.37	1.9	.47	3.6	3.6	.87	.47		
4	0	.65	1.7	.42	1.3	.42	3.4	3.6	.87	.47		
5	0	.58	.58	.42	1.3	.52	3.8	3.6	.87	.47		
6	0	.52	.42	.42	.95	1.6	5.9	3.2	.79	.47		
7	0	.52	.37	.47	.72	.79	5.9	3.0	.79	.37		
8	0	.52	.33	.52	.72	2.1	8.0	2.8	.79	.37		
9	0	.47	.33	.65	1.2	1.4	13	2.6	.79	.42		
10	0	.42	.29	.52	2.0	4.3	11	2.5	.79	.37		
11	0	.37	.29	.47	1.0	6.6	11	2.5	.72	.25		
12	0	.33	.29	.42	.87	4.0	9.9	2.5	.72	.16		
13	0	.33	.29	.37	.79	2.6	9.5	2.3	.65	.11		
14	0	.33	.29	.33	.87	4.4	8.7	1.9	.65	.09		
15	0	.37	.29	.37	.79	2.8	7.4	1.9	.58	.09		
16	0	.37	.29	.37	.72	2.5	7.1	1.9	.65	.06		
17	0	.33	.29	.33	.65	4.2	9.5	1.8	.79	.04		
18	0	.33	.29	.33	.65	4.0	8.7	1.8	.87	.04		
19	0	.29	.29	.33	.65	4.4	9.1	1.7	.79	.03		
20	0	.29	.29	.37	.65	4.2	8.0	2.6	.79	.03		
21	0	.33	.25	.42	.65	4.0	7.4	2.3	.79	.02		
22	0	.42	.25	.47	.58	5.1	6.8	2.0	.79	.02		
23	0	.33	.25	.47	.58	6.2	6.5	1.8	.65	.01		
24	0	.29	.29	.52	.52	4.6	5.6	1.7	.65	.01		
25	0	.29	.37	.52	.52	4.4	5.6	1.4	.65	0		
26	0	.33	.37	.52	.52	8.3	5.6	1.4	.47	0		
27	0	.33	.42	.58	.52	5.9	5.1	1.3	.47	0		
28	1.3	.33	.72	.58	.52	4.6	4.6	1.3	.47	0		
29	4.5	.25	.72	.58	---	4.0	4.2	1.3	.47	0		
30	1.4	.29	.58	.72	---	3.6	4.0	1.0	.47	0		
31	.87	---	.52	.79	---	3.8	---	.95	---	0		---
TOTAL	8.07	13.07	12.57	14.54	23.44	106.79	207.3	69.85	21.55	5.31	0	0
MEAN	.26	.44	.41	.47	.84	3.44	6.91	2.25	.72	.17	0	0
MAX	4.5	1.2	1.7	.79	2.0	8.3	13	3.8	.95	.47	0	0
MIN	0	.25	.25	.33	.52	.42	3.4	.95	.47	0	0	0
AC-FT	16	26	25	29	46	212	411	139	43	11	0	0

CAL YR 1974 TOTAL 324.36 MEAN .89 MAX 22 MIN 0 AC-FT 643
WTR YR 1975 TOTAL 482.49 MEAN 1.32 MAX 13 MIN 0 AC-FT 957

Peak discharge (base, 100 ft^3/s).--No peak above base.

11016550 SWEETWATER RESERVOIR NEAR NATIONAL CITY, CALIF.

LOCATION.--Lat 32°41'20", long 117°00'35", San Diego County, in La Nacion Grant, at Sweetwater Dam on Sweetwater River, 6 mi (10 km) east of National City, and 8 mi (13 km) upstream from mouth.

DRAINAGE AREA.--182 mi^2 (471 km^2).

PERIOD OF RECORD.--October 1943 to September 1966 published with Sweetwater River at Sweetwater Dam (sta 11016500). October 1972 to current year. Records of monthend gage heights October 1891 to September 1943, in files of San Diego County Department of Sanitation and Flood Control.

GAGE.--Nonrecording gage. Datum of gage is 149.28 ft (45.501 m) above mean sea level (levels by San Diego County); gage readings have been reduced to elevations above mean sea level. Oct. 1, 1972, to Mar. 6, 1975, water-stage recorder at same site and datum. Prior to Oct. 1, 1972, nonrecording gage at same site at datum 0.16 ft (0.049 m) lower.

EXTREMES.--Current year: Maximum contents observed, 3,540 acre-ft (4.36 hm^3) June 30 (elevation, 196.25 ft or 59.817 m); minimum, 2,540 acre-ft (3.13 hm^3) Dec. 3 (elevation, 191.88 ft or 58.485 m).
Period of record (1943-66, 1972 to current year): Maximum contents, 20,900 acre-ft (25.8 hm^3) Oct. 31, 1943 (elevation, 231.24 ft or 70.482 m); minimum, 1,740 acre-ft (2.15 hm^3) Nov. 1, 1949 (elevation, 188.48 ft or 57.449 m).

REMARKS.--Reservoir is formed by concrete-gravity dam. Dam completed Apr. 7, 1888, to elevation 223.82 ft (68.220 m), raised to elevation 228.82 ft (69.744 m) in 1895, and raised to elevation 243.82 ft (74.316 m) in 1911. In 1939 the spillway was completed at its present elevation. Capacity table dated December 1947. Capacity of reservoir at spillway level, 27,690 acre-ft (34.1 hm^3), elevation, 238.82 ft (72.792 m). Dead storage below lowest outlet, 4.0 acre-ft (4,930 m^3), elevation, 168.82 ft (51.456 m). Diversions for irrigation. Regulation at Loveland Reservoir. Water is released by California-American Water Co. as required for irrigation and domestic use in Chula Vista, National City, and contiguous areas.

COOPERATION.--Gage heights furnished by San Diego County Department of Sanitation and Flood Control.

MONTHEND ELEVATION AND CONTENTS, WATER YEAR OCTOBER 1974 TO SEPTEMBER 1975

Date	Elevation (feet)a	Contents (acre-feet)	Change in contents (acre-feet)
Sept. 30	194.75	3,150	--
Oct. 31	193.93	2,940	-210
Nov. 30	191.89	2,450	-490
Dec. 31	192.26	2,540	+90
CAL YR 1974	--	--	+110
Jan. 31	192.12	2,500	-40
Feb. 28	192.28	2,540	+40
Mar. 31	194.06	2,980	+440
Apr. 30	--	--	--
May 31	194.80	3,160	+180
June 30	196.25	3,540	+380
July 31	195.00	3,210	-330
Aug. 31	194.04	2,970	-240
Sept. 30	193.26	2,780	-190
WTR YR 1975	--	--	-370

a Elevation at 0800.

11020600 EL CAPITAN RESERVOIR NEAR LAKESIDE, CALIF.

LOCATION.--Lat 32°53'00", long 116°48'25", in NE¼SE¼NE¼ sec.7, T.15 S., R.2 E., San Diego County, on outlet tower of El Capitan Dam on San Diego River, 7 mi (11 km) east of Lakeside.

DRAINAGE AREA.--188 mi^2 (487 km^2).

PERIOD OF RECORD.--October 1945 to September 1966 published with San Diego River at El Capitan Dam (sta 11020500). October 1972 to current year. October 1936 to September 1945 not equivalent owing to exclusion of greater part of flow released from Cuyamaca Reservoir.

GAGE.--Water-stage recorder. Datum of gage is 663.0 ft (202.08 m) above mean sea level; gage readings have been converted to elevations above mean sea level. Prior to Oct. 1, 1972, nonrecording gage at same site at datum 110.0 ft (33.53 m) lower.

EXTREMES.--Current year: Maximum contents observed, 19,440 acre-ft (24.0 hm^3) May 31 (elevation, 657.78 ft or 200.491 m); minimum, 11,890 acre-ft (14.7 hm^3) Mar. 5 (elevation, 641.50 ft or 195.529 m).
Period of record (1945-66, 1972 to current year): Maximum contents, 62,400 acre-ft (76.9 hm^3) Oct. 1, 1945 (elevation, 708.75 ft or 216.027 m); minimum, 2,252 acre-ft (2.78 hm^3) May 1, 1957 (elevation, 606.28 ft or 184.794 m).

REMARKS.--Reservoir is formed by hydraulic fill-rock embankment, completed in 1935. Capacity table dated Mar. 29, 1956. Capacity of reservoir at spillway level, 112,810 acre-ft (139 hm^3), elevation, 750.00 ft (228.600 m). Dead storage below lowest outlet, 59.2 acre-ft (73,000 m^3), elevation, 574.0 ft (174.955 m). Reservoir storage includes supplemental Colorado River water. No significant diversion above reservoir. Flow partly regulated by Cuyamaca Reservoir. Water is released as required for municipal use and irrigation.

COOPERATION.--Records furnished by San Diego County, Department of Sanitation and Flood Control.

MONTHEND ELEVATION AND CONTENTS, WATER YEAR OCTOBER 1974 TO SEPTEMBER 1975

Date	Elevation (feet)a	Contents (acre-feet)	Change in contents (acre-feet)
Sept. 30	648.77	14,960	--
Oct. 31	648.82	14,980	+20
Nov. 30	648.20	14,700	-280
Dec. 31	647.18	14,240	-460
CAL YR 1974	--	--	-12,590
Jan. 31	642.20	12,160	-2,080
Feb. 28	641.60	11,930	-230
Mar. 31	648.14	14,670	+2,740
Apr. 30	655.97	18,480	+3,810
May 31	657.78	19,440	+960
June 30	657.24	19,150	-290
July 31	656.62	18,830	-320
Aug. 31	653.62	17,280	-1,550
Sept. 30	651.72	16,350	-930
WTR YR 1975	--	--	+1,390

a Elevation at 0800.

11022100 SAN VICENTE RESERVOIR NEAR LAKESIDE, CALIF.

LOCATION.--Lat 32°54'45", long 116°55'25", in SE¼SW¼NW¼ sec.31, T.14 S., R.1 E., San Diego County, near center of upstream face of San Vicente Dam on San Vicente Creek, 3.6 mi (5.8 km) north of Lakeside.

DRAINAGE AREA.--74.2 mi^2 (192.2 km^2).

PERIOD OF RECORD.--October 1946 to September 1961 published with San Vicente Creek at San Vicente Dam, at Foster (sta 11022000). October 1972 to current year.

GAGE.--Water-stage recorder. Datum of gage is 560.0 ft (170.69 m) above mean sea level; gage readings have been converted to elevations above mean sea level. October 1946 to September 1961, nonrecording gage at same site at datum 100 ft (30.5 m) lower.

EXTREMES.--Current year: Maximum contents observed, 82,770 acre-ft (102 hm^3) Apr. 24 (elevation, 642.90 ft or 195.956 m); minimum, 57,260 acre-ft (70.6 hm^3) Oct. 25 (elevation, 616.25 ft or 187.833 m).
Period of record (1946-61, 1972 to current year): Maximum contents, 83,980 acre-ft (104 hm^3) July 31, 1973 (elevation, 664.07 ft or 202.409 m); minimum, 12,390 acre-ft (15.3 hm^3) Nov. 1, 1947 (elevation, 549.22 ft or 167.402 m).

REMARKS.--Reservoir is formed by concrete-gravity dam, constructed in 1941-43 by city of San Diego; storage began during construction period. Capacity table is dated Feb. 18, 1944. Capacity of reservoir at spillway level, 90,230 acre-ft (111 hm^3), elevation, 650 ft (198.1 m). Dead storage below lowest outlet, 350 acre-ft (432,000 m^3), elevation, 493.0 ft (150.27 m). Reservoir storage includes supplemental water from the San Diego River, Santa Ysabel Creek, and Colorado River basins. No diversion above reservoir. Water is released as required for municipal use.

COOPERATION.--Gage heights furnished by San Diego County, Department of Sanitation and Flood Control.

MONTHEND ELEVATION AND CONTENTS, WATER YEAR OCTOBER 1974 TO SEPTEMBER 1975

Date	Elevation (feet)a	Contents (acre-feet)	Change in contents (acre-feet)
Sept. 30	616.52	57,500	--
Oct. 31	618.22	59,010	+1,510
Nov. 30	621.84	62,280	+3,270
Dec. 31	628.07	68,080	+5,800
CAL YR 1974	--	--	-3,320
Jan. 31	632.80	72,620	+4,540
Feb. 28	637.00	76,770	+4,150
Mar. 31	641.72	81,550	+4,780
Apr. 30	642.80	82,670	+1,120
May 31	642.00	81,840	-830
June 30	639.08	78,860	-2,980
July 31	633.73	73,530	-5,330
Aug. 31	629.67	69,600	-3,930
Sept. 30	624.61	64,830	-4,770
WTR YR 1975	--	--	+7,330

a Elevation at 0800.

11022500 SAN DIEGO RIVER NEAR SANTEE, CALIF.

LOCATION.--Lat 32°49'29", long 117°03'17", in Ex Mission San Diego Grant, San Diego County, on right bank in Mission Gorge, 0.2 mi (0.3 km) upstream from left tributary, and 6 mi (10 km) west of Santee.

DRAINAGE AREA.--377 mi^2 (976 km^2).

PERIOD OF RECORD.--May 1912 to December 1915, March 1916 to current year. Monthly discharge only for some periods and yearly estimates only for 1924-25, published in WSP 1315-B.

GAGE.--Water-stage recorder and unfinished rubble dam control. Altitude of gage is 180 ft (54.9 m), from topographic map. Prior to Nov. 10, 1920, nonrecording gage at site 1.5 mi (2.4 km) upstream at different datum. Nov. 10, 1920, to Dec. 1, 1954, water-stage recorder at present site at datum 1.0 ft (0.30 m) higher.

AVERAGE DISCHARGE.--62 years, 22.1 ft^3/s (0.626 m^3/s), 16,010 acre-ft/yr (19.7 hm^3/yr).

EXTREMES.--Current year: Maximum discharge, 1,280 ft^3/s (36.2 m^3/s) Dec. 4 (gage height, 7.67 ft or 2.338 m); minimum daily, 3.4 ft^3/s (0.096 m^3/s) Aug. 20, 21.
Period of record: Maximum discharge, 70,200 ft^3/s (1,988 m^3/s) Jan. 27, 1916 (gage height, 25.1 ft or 7.651 m, site and datum then in use), based on slope-conveyance computation; no flow at times in some years.

REMARKS.--Records good. Flow regulated by Cuyamaca Reservoir, capacity, 11,540 acre-ft (46.7 hm^3), El Capitan Reservoir (see sta 11020500), and San Vicente Reservoir (see sta 11022000). Diversions by city of San Diego for municipal supply and by Helix Irrigation District. AVERAGE DISCHARGE represents flow to ocean during period of record, regardless of upstream development.

DISCHARGE, IN CUBIC FEET PER SECOND, WATER YEAR OCTOBER 1974 TO SEPTEMBER 1975
MEAN VALUES

DAY	OCT	NOV	DEC	JAN	FEB	MAR	APR	MAY	JUN	JUL	AUG	SEP
1	3.8	22	10	16	11	7.8	19	20	8.6	7.8	6.5	5.6
2	3.8	74	9.9	14	9.2	7.8	16	20	8.4	7.8	6.3	5.3
3	3.8	26	10	13	15	7.8	15	20	8.3	7.6	6.2	5.1
4	3.8	18	269	11	38	7.9	15	20	8.1	7.4	6.0	4.8
5	3.8	16	71	9.9	29	8.3	14	20	7.8	7.0	5.3	4.7
6	4.1	15	36	9.2	16	241	28	19	7.6	6.8	4.6	4.6
7	4.2	12	26	9.3	12	62	58	18	7.4	6.3	4.2	5.0
8	4.2	12	21	11	9.4	80	261	17	7.2	6.1	4.0	6.5
9	4.2	11	18	11	9.4	59	361	16	7.1	5.9	3.9	6.4
10	4.2	11	16	10	29	139	124	15	7.0	5.8	4.1	6.3
11	4.1	11	15	9.3	23	418	75	14	6.8	5.4	4.8	6.4
12	3.9	9.3	14	8.8	15	139	52	13	6.7	5.7	5.1	6.7
13	4.1	8.8	13	8.6	12	69	41	12	6.9	7.0	5.3	6.9
14	3.9	8.4	13	8.3	11	100	34	12	7.2	7.8	5.2	7.2
15	3.7	7.7	12	8.2	11	58	29	10	7.8	7.3	5.1	7.0
16	3.7	7.5	12	8.2	10	41	28	10	8.0	6.9	5.0	6.6
17	3.7	7.8	12	8.2	9.8	34	40	10	8.0	6.6	5.0	7.1
18	4.0	7.7	11	8.3	9.5	28	35	10	8.7	6.9	4.8	7.7
19	4.2	7.9	11	8.5	8.9	24	24	10	9.1	6.9	4.1	8.1
20	4.8	8.0	11	8.6	8.4	21	20	11	8.7	7.3	3.4	8.1
21	4.7	7.5	10	8.3	8.0	18	19	12	8.4	7.2	3.4	7.9
22	4.5	8.8	10	7.7	7.9	23	19	10	8.5	6.5	4.0	8.4
23	4.7	11	10	7.3	7.9	29	19	9.6	8.1	6.2	4.7	8.3
24	4.7	9.1	9.6	7.0	7.8	21	18	9.4	7.6	6.4	5.4	6.9
25	4.2	8.2	9.3	6.8	7.8	18	19	9.4	7.6	6.6	5.4	5.5
26	4.3	8.2	9.2	6.9	7.8	18	19	9.2	8.1	6.7	5.2	4.7
27	9.4	8.6	9.7	7.3	7.8	17	20	9.2	8.2	7.2	4.9	4.4
28	28	9.9	14	7.7	7.8	17	20	9.3	8.7	7.1	5.2	4.9
29	192	11	31	7.9	---	17	20	9.3	8.8	6.8	5.0	5.1
30	54	10	29	8.0	---	18	20	9.1	8.4	6.6	5.1	4.8
31	26	---	20	11	---	18	---	9.1	---	6.4	5.5	---
TOTAL	416.5	393.4	772.7	285.3	359.4	1766.6	1482	402.6	237.8	210.0	152.7	187.0
MEAN	13.4	13.1	24.9	9.20	12.8	57.0	49.4	13.0	7.93	6.77	4.93	6.23
MAX	192	74	269	16	38	418	361	20	9.1	7.8	6.5	8.4
MIN	3.7	7.5	9.2	6.8	7.8	7.8	14	9.1	6.7	5.4	3.4	4.4
AC-FT	826	780	1530	566	713	3500	2940	799	472	417	303	371

CAL YR 1974 TOTAL 4369.0 MEAN 12.0 MAX 332 MIN 2.2 AC-FT 8670
WTR YR 1975 TOTAL 6666.0 MEAN 18.3 MAX 418 MIN 3.4 AC-FT 13220

11022500 SAN DIEGO RIVER NEAR SANTEE, CALIF.--Continued

PERIOD OF RECORD.--Water temperatures: October 1970 to current year.
Sediment records: October 1969 to current year.

EXTREMES.--Current year:
Sediment concentrations: Maximum daily, 405 mg/l Oct. 29; minimum daily, 10 mg/l on several days during October.
Sediment discharge: Maximum daily, 656 tons (595 tonnes) Dec. 4; minimum daily, 0.10 ton (0.09 tonne) Sept. 15-17.
Period of record:
Sediment concentrations: Maximum daily, 512 mg/l Mar. 1, 1970; minimum daily, 10 mg/l on many days in 1971-72, and 1974.
Sediment discharge: Maximum daily, 656 tons (595 tonnes) Dec. 4, 1974; minimum daily, 0 tons (0 tonnes) on many days in 1969 and 1970.

TEMPERATURE (DEG. C) OF WATER, WATER YEAR OCTOBER 1974 TO SEPTEMBER 1975
(ONCE-DAILY)

DAY	OCT	NOV	DEC	JAN	FEB	MAR	APR	MAY	JUN	JUL	AUG	SEP
1	---	---	---	9.0	10.0	---	---	---	---	---	---	---
2	---	---	---	8.5	---	---	---	---	---	23.0	---	21.0
3	---	---	---	7.5	9.0	---	---	---	---	---	---	---
4	19.5	---	14.0	---	11.0	14.5	---	---	26.0	---	---	---
5	---	---	14.5	---	12.5	14.0	---	---	---	---	23.0	---
6	---	14.5	14.0	---	11.0	15.0	---	---	---	---	---	---
7	---	15.0	14.0	10.5	12.0	14.0	---	16.0	---	---	---	---
8	---	14.0	13.0	---	13.0	15.0	---	---	---	23.0	---	---
9	---	15.0	13.0	---	13.5	15.0	14.0	---	---	---	---	21.0
10	---	---	12.0	---	14.0	14.0	14.0	---	---	---	---	---
11	---	---	---	10.0	14.0	12.5	---	---	24.0	---	---	---
12	---	14.0	---	---	---	10.5	---	---	---	---	22.0	---
13	---	14.0	---	---	---	13.0	---	---	---	---	---	---
14	---	---	---	---	---	13.0	---	20.0	---	---	---	---
15	---	---	---	---	---	12.0	---	---	---	23.0	---	---
16	---	16.0	---	---	---	14.0	16.0	---	---	---	---	22.0
17	---	---	12.0	---	---	12.0	---	---	---	---	---	---
18	---	---	---	10.0	11.0	---	---	---	20.0	---	---	---
19	---	---	---	---	---	---	---	17.5	---	---	23.0	---
20	---	17.0	---	---	---	---	---	---	---	---	---	---
21	---	---	---	---	---	---	---	18.0	---	---	---	---
22	---	17.0	---	---	---	---	---	---	---	25.0	22.0	---
23	17.0	---	10.0	---	---	14.5	18.0	---	---	27.0	---	20.0
24	---	---	---	---	---	---	---	---	---	---	---	---
25	---	---	---	11.0	---	---	---	---	21.0	---	---	---
26	---	---	---	---	13.5	---	---	---	---	---	---	---
27	---	13.0	---	---	---	---	---	---	---	---	---	---
28	---	---	8.0	---	---	---	---	26.0	---	---	---	---
29	---	---	9.0	---	---	---	---	---	---	24.0	---	---
30	16.0	---	9.5	---	---	---	18.0	---	---	---	---	20.0
31	---	---	9.5	9.0	---	---	---	---	---	---	---	---
MEAN	---	---	---	---	---	---	---	---	---	---	---	---

11022500 SAN DIEGO RIVER NEAR SANTEE, CALIF.--Continued

SUSPENDED-SEDIMENT DISCHARGE (TONS/DAY), WATER YEAR OCTOBER 1974 TO SEPTEMBER 1975

	OCTOBER			NOVEMBER			DECEMBER		
DAY	MEAN DISCHARGE (CFS)	MEAN CONCEN-TRATION (MG/L)	SEDIMENT DISCHARGE (TONS/DAY)	MEAN DISCHARGE (CFS)	MEAN CONCEN-TRATION (MG/L)	SEDIMENT DISCHARGE (TONS/DAY)	MEAN DISCHARGE (CFS)	MEAN CONCEN-TRATION (MG/L)	SEDIMENT DISCHARGE (TONS/DAY)
1	3.8	11	.11	22	65	3.9	10	12	.32
2	3.8	11	.11	74	105	28	9.9	11	.29
3	3.8	11	.11	26	20	1.4	10	11	.30
4	3.8	12	.12	18	19	.92	269	375	656
5	3.8	12	.12	16	18	.78	71	190	47
6	4.1	12	.13	15	18	.73	36	55	5.3
7	4.2	12	.14	12	17	.55	26	30	2.1
8	4.2	12	.14	12	16	.52	21	23	1.3
9	4.2	12	.14	11	15	.45	18	15	.73
10	4.2	12	.14	11	15	.45	16	13	.56
11	4.1	11	.12	11	15	.45	15	13	.53
12	3.9	11	.12	9.3	16	.40	14	12	.45
13	4.1	11	.12	8.8	17	.40	13	12	.42
14	3.9	11	.12	8.4	17	.39	13	12	.42
15	3.7	10	.10	7.7	18	.37	12	12	.39
16	3.7	10	.10	7.5	18	.36	12	12	.39
17	3.7	10	.10	7.8	17	.36	12	12	.39
18	4.0	10	.11	7.7	17	.35	11	12	.36
19	4.2	11	.12	7.9	16	.34	11	12	.36
20	4.8	12	.16	8.0	15	.32	11	12	.36
21	4.7	11	.14	7.5	14	.28	10	12	.32
22	4.5	11	.13	8.8	14	.33	10	12	.32
23	4.7	10	.13	11	14	.42	10	12	.32
24	4.7	10	.13	9.1	14	.34	9.6	11	.29
25	4.2	10	.11	8.2	13	.29	9.3	11	.28
26	4.3	10	.12	8.2	12	.27	9.2	11	.27
27	9.4	12	.31	8.6	11	.26	9.7	11	.29
28	28	60	14	9.9	12	.32	14	14	.57
29	192	405	278	11	13	.39	31	70	5.9
30	54	125	26	10	13	.35	29	50	3.9
31	26	100	7.0	---	---	---	20	19	1.0
TOTAL	416.5	---	328.50	393.4	---	44.69	772.7	---	731.43

	JANUARY			FEBRUARY			MARCH		
DAY	MEAN DISCHARGE (CFS)	MEAN CONCEN-TRATION (MG/L)	SEDIMENT DISCHARGE (TONS/DAY)	MEAN DISCHARGE (CFS)	MEAN CONCEN-TRATION (MG/L)	SEDIMENT DISCHARGE (TONS/DAY)	MEAN DISCHARGE (CFS)	MEAN CONCEN-TRATION (MG/L)	SEDIMENT DISCHARGE (TONS/DAY)
1	16	14	.60	11	15	.45	7.8	15	.32
2	14	12	.45	9.2	16	.40	7.8	15	.32
3	13	12	.42	15	25	1.0	7.8	15	.32
4	11	12	.36	38	95	9.8	7.9	15	.32
5	9.9	12	.32	29	40	3.1	8.3	14	.31
6	9.2	12	.30	16	14	.60	241	255	328
7	9.3	25	.63	12	12	.39	62	130	26
8	11	18	.53	9.4	11	.28	80	120	45
9	11	17	.50	9.4	11	.28	59	120	21
10	10	16	.43	29	35	2.7	139	120	109
11	9.3	15	.38	23	30	1.9	418	320	419
12	8.8	14	.33	15	25	1.0	139	210	91
13	8.6	13	.30	12	24	.78	69	80	15
14	8.3	12	.27	11	23	.68	100	105	31
15	8.2	12	.27	11	22	.65	58	60	9.4
16	8.2	11	.24	10	21	.57	41	35	3.9
17	8.2	11	.24	9.8	21	.56	34	30	2.8
18	8.3	11	.25	9.5	20	.51	28	25	1.9
19	8.5	12	.28	8.9	19	.46	24	23	1.5
20	8.6	12	.28	8.4	19	.43	21	21	1.2
21	8.3	13	.29	8.0	18	.39	18	20	.97
22	7.7	13	.27	7.9	18	.38	23	25	1.6
23	7.3	13	.26	7.9	17	.36	29	40	3.1
24	7.0	14	.26	7.8	17	.36	21	25	1.4
25	6.8	14	.26	7.8	16	.34	18	23	1.1
26	6.9	14	.26	7.8	16	.34	18	20	.97
27	7.3	14	.28	7.8	16	.34	17	19	.87
28	7.7	13	.27	7.8	15	.32	17	18	.83
29	7.9	13	.28	---	---	---	17	17	.78
30	8.0	13	.28	---	---	---	18	16	.78
31	11	14	.42	---	---	---	18	15	.73
TOTAL	285.3	---	10.51	359.4	---	29.37	1766.6	---	1120.42

11022500 SAN DIEGO RIVER NEAR SANTEE, CALIF.--Continued

SUSPENDED-SEDIMENT DISCHARGE (TONS/DAY), WATER YEAR OCTOBER 1974 TO SEPTEMBER 1975

	APRIL			MAY			JUNE		
DAY	MEAN DISCHARGE (CFS)	MEAN CONCEN-TRATION (MG/L)	SEDIMENT DISCHARGE (TONS/DAY)	MEAN DISCHARGE (CFS)	MEAN CONCEN-TRATION (MG/L)	SEDIMENT DISCHARGE (TONS/DAY)	MEAN DISCHARGE (CFS)	MEAN CONCEN-TRATION (MG/L)	SEDIMENT DISCHARGE (TONS/DAY)
1	19	15	.77	20	21	1.1	8.6	35	.81
2	16	15	.65	20	21	1.1	8.4	45	1.0
3	15	15	.61	20	21	1.1	8.3	60	1.3
4	15	15	.61	20	21	1.1	8.1	70	1.5
5	14	15	.57	20	22	1.2	7.8	80	1.7
6	28	25	1.9	19	23	1.2	7.6	80	1.6
7	58	45	7.0	18	24	1.2	7.4	85	1.7
8	261	120	142	17	26	1.2	7.2	90	1.8
9	361	175	178	16	27	1.2	7.1	90	1.7
10	124	80	28	15	27	1.1	7.0	90	1.7
11	75	55	11	14	26	.98	6.8	90	1.7
12	52	45	6.3	13	26	.91	6.7	90	1.6
13	41	40	4.4	12	25	.81	6.9	85	1.6
14	34	35	3.2	12	24	.78	7.2	80	1.6
15	29	30	2.3	10	23	.62	7.8	80	1.7
16	28	50	3.8	10	23	.62	8.0	80	1.7
17	40	70	7.6	10	23	.62	8.0	85	1.8
18	35	65	6.1	10	25	.68	8.7	90	2.1
19	24	60	3.9	10	35	.95	9.1	95	2.3
20	20	55	3.0	11	50	1.5	8.7	95	2.2
21	19	50	2.6	12	45	1.5	8.4	90	2.0
22	19	45	2.3	10	40	1.1	8.5	85	2.0
23	19	40	2.1	9.6	35	.91	8.1	85	1.9
24	18	35	1.7	9.4	30	.76	7.6	90	1.8
25	19	30	1.5	9.4	29	.74	7.6	100	2.1
26	19	26	1.3	9.2	28	.70	8.1	105	2.3
27	20	24	1.3	9.2	28	.70	8.2	110	2.4
28	20	23	1.2	9.3	27	.68	8.7	110	2.6
29	20	22	1.2	9.3	28	.70	8.8	105	2.5
30	20	21	1.1	9.1	29	.71	8.4	85	1.9
31	---	---	---	9.1	30	.74	---	---	---
TOTAL	1482	---	428.01	402.6	---	29.21	237.8	---	54.61

	JULY			AUGUST			SEPTEMBER		
DAY	MEAN DISCHARGE (CFS)	MEAN CONCEN-TRATION (MG/L)	SEDIMENT DISCHARGE (TONS/DAY)	MEAN DISCHARGE (CFS)	MEAN CONCEN-TRATION (MG/L)	SEDIMENT DISCHARGE (TONS/DAY)	MEAN DISCHARGE (CFS)	MEAN CONCEN-TRATION (MG/L)	SEDIMENT DISCHARGE (TONS/DAY)
1	7.8	75	1.6	6.5	75	1.3	5.6	35	.53
2	7.8	65	1.4	6.3	65	1.1	5.3	35	.50
3	7.6	65	1.3	6.2	50	.84	5.1	35	.48
4	7.4	70	1.4	6.0	55	.89	4.8	35	.45
5	7.0	70	1.3	5.3	55	.79	4.7	30	.38
6	6.8	75	1.4	4.6	45	.56	4.6	30	.37
7	6.3	80	1.4	4.2	40	.45	5.0	30	.41
8	6.1	80	1.3	4.0	35	.38	6.5	30	.53
9	5.9	75	1.2	3.9	30	.32	6.4	30	.52
10	5.8	70	1.1	4.1	30	.33	6.3	30	.51
11	5.4	75	1.1	4.8	35	.45	6.4	35	.60
12	5.7	85	1.3	5.1	45	.62	6.7	35	.63
13	7.0	105	2.0	5.3	50	.72	6.9	40	.75
14	7.8	110	2.3	5.2	50	.70	7.2	40	.78
15	7.3	115	2.3	5.1	50	.69	7.0	40	.76
16	6.9	80	1.5	5.0	45	.61	6.6	40	.71
17	6.6	55	.98	5.0	35	.47	7.1	35	.67
18	6.9	55	1.0	4.8	30	.39	7.7	40	.83
19	6.9	55	1.0	4.1	27	.30	8.1	40	.87
20	7.3	55	1.1	3.4	24	.22	8.1	40	.87
21	7.2	50	.97	3.4	23	.21	7.9	40	.85
22	6.5	45	.79	4.0	23	.25	8.4	35	.79
23	6.2	30	.50	4.7	26	.33	8.3	30	.67
24	6.4	45	.78	5.4	28	.41	6.9	28	.52
25	6.6	50	.89	5.4	29	.42	5.5	26	.39
26	6.7	60	1.1	5.2	28	.39	4.7	25	.32
27	7.2	70	1.4	4.9	27	.36	4.4	24	.29
28	7.1	80	1.5	5.2	27	.38	4.9	26	.34
29	6.8	85	1.6	5.0	28	.38	5.1	27	.37
30	6.6	80	1.4	5.1	30	.41	4.8	25	.32
31	6.4	80	1.4	5.5	35	.52	---	---	---
TOTAL	210.0	---	40.31	152.7	---	16.19	187.0	---	17.01
YEAR	6666.0		2850.26						

11022500 SAN DIEGO RIVER NEAR SANTEE, CALIF.--Continued

PARTICLE-SIZE DISTRIBUTION OF SUSPENDED SEDIMENT, WATER YEAR OCTOBER 1974 TO SEPTEMBER 1975

DATE	TIME	TEMPER-ATURE (DEG C)	INSTAN-TANEOUS DIS-CHARGE (CFS)	SUS-PENDED SEDI-MENT (MG/L)	SUS-PENDED SEDI-MENT DIS-CHARGE (T/DAY)	SUS. SED. FALL DIAM. % FINER THAN .002 MM	SUS. SED. FALL DIAM. % FINER THAN .004 MM	SUS. SED. FALL DIAM. % FINER THAN .008 MM	SUS. SED. FALL DIAM. % FINER THAN .016 MM	SUS. SED. FALL DIAM. % FINER THAN .031 MM
OCT.										
30...	1315	16.0	39	88	9.3	--	--	--	--	--
DEC.										
04...	1610	14.5	1180	1430	4560	45	64	70	79	89
05...	1000	14.0	68	185	34	86	94	96	96	96
05...	1215	15.0	58	146	23	--	--	--	--	--
29...	0900	9.0	24	69	4.5	--	--	--	--	--
FEB.										
04...	0800	11.0	37	120	12	--	--	--	--	--
MAR.										
06...	1700	15.0	846	632	1440	75	86	94	98	99
08...	1630	16.0	78	116	24	--	--	--	--	--
11...	0800	12.5	200	223	120	82	91	96	97	98
11...	1200	13.0	164	192	85	--	--	--	--	--
11...	1630	14.0	738	345	687	66	74	84	89	94
APR.										
09...	1340	14.0	400	183	198	--	--	--	--	--

DATE	SUS. SED. FALL DIAM. % FINER THAN .062 MM	SUS. SED. SIEVE DIAM. % FINER THAN .062 MM	SUS. SED. FALL DIAM. % FINER THAN .125 MM	SUS. SED. SIEVE DIAM. % FINER THAN .125 MM	SUS. SED. FALL DIAM. % FINER THAN .250 MM	SUS. SED. SIEVE DIAM. % FINER THAN .250 MM	SUS. SED. FALL DIAM. % FINER THAN .500 MM	SUS. SED. SIEVE DIAM. % FINER THAN .500 MM	SUS. SED. SIEVE DIAM. % FINER THAN 1.00 MM	SUS. SED. SIEVE DIAM. % FINER THAN 2.00 MM
OCT.										
30...	--	99	--	100	--	--	--	--	--	--
DEC.										
04...	94	--	96	--	98	--	100	--	--	--
05...	--	96	--	97	--	98	--	100	--	--
05...	--	96	--	96	--	96	--	98	99	100
29...	--	85	--	87	--	89	--	93	100	--
FEB.										
04...	--	100	--	--	--	--	--	--	--	--
MAR.										
06...	--	99	--	100	--	--	--	--	--	--
08...	--	97	--	98	--	99	--	100	--	--
11...	--	99	--	100	--	--	--	--	--	--
11...	--	97	--	97	--	100	--	--	--	--
11...	--	98	--	100	--	--	--	--	--	--
APR.										
09...	--	96	--	97	--	98	--	100	--	--

11023320 POMERADO CREEK AT POWAY ROAD, NEAR POWAY, CALIF.

LOCATION.--Lat 32°57'07", long 117°03'48", in NE¼SW¼SW¼ sec.14, T.14 S., R.2 W., San Diego County, on right bank at Poway Road, 0.2 mi (0.3 km) upstream from mouth, and 2.0 mi (3.2 km) southwest of Poway.

DRAINAGE AREA.--4.14 mi^2 (10.72 km^2).

PERIOD OF RECORD.--October 1970 to September 1975 (discontinued).

GAGE.--Water-stage recorder. Altitude of gage is 440 ft (134 m), from topographic map.

AVERAGE DISCHARGE.--5 years, 0.29 ft^3/s (0.0082 m^3/s), 210 acre-ft/yr (259,000 m^3/yr).

EXTREMES.--Current year: Maximum discharge, 95 ft^3/s (2.69 m^3/s) Apr. 8; maximum gage height, 4.59 ft (1.399 m) Oct. 21; no flow on some days in October and September.
Period of record: Maximum discharge, 131 ft^3/s (3.71 m^3/s) Jan. 7, 1974 (gage height, 5.11 ft or 1.558 m); no flow some days in each year.

REMARKS.--Records fair. No regulation or diversion.

DISCHARGE, IN CUBIC FEET PER SECOND, WATER YEAR OCTOBER 1974 TO SEPTEMBER 1975
MEAN VALUES

DAY	OCT	NOV	DEC	JAN	FEB	MAR	APR	MAY	JUN	JUL	AUG	SEP
1	0	.90	.01	.07	.02	.07	.61	.07	.02	.01	.01	.01
2	.02	.25	.01	.04	.02	.06	.05	.11	.01	.01	.01	.01
3	0	.03	.01	.02	1.6	.05	.05	.05	.01	.01	.01	.01
4	0	.02	11	.03	.73	.05	.05	.05	.01	.01	.01	.01
5	.02	.02	1.2	.02	.42	.60	.63	.04	.01	.01	.01	.01
6	.01	.02	.57	.03	.07	9.4	2.3	.05	.01	.01	.01	.01
7	.01	.02	.21	.12	.04	4.5	2.2	.04	.01	.01	.03	.01
8	.01	.02	.17	.05	.03	5.2	38	.05	.01	.01	.01	.01
9	0	.02	.15	.07	1.2	4.1	23	.07	.01	.01	.01	.01
10	0	.02	.08	.04	1.7	5.0	3.0	.04	.01	.01	.01	.02
11	.01	.02	.05	.05	.26	6.4	1.3	.04	.01	.01	.02	.01
12	0	.02	.05	.02	.12	2.9	.95	.04	.01	.01	.01	.01
13	0	.02	.05	.02	.06	1.9	.32	.04	.01	.01	.01	.01
14	.01	.02	.04	.02	.21	3.9	.18	.04	.01	.01	.01	.01
15	0	.02	.05	.03	.07	2.0	.16	.03	.01	.01	.01	.01
16	0	.02	.05	.04	.07	1.7	.18	.03	.01	.01	.01	.01
17	0	.02	.04	.03	.22	2.0	.88	.02	.01	.01	.01	.01
18	0	.02	.04	.02	.35	3.3	.18	.02	.05	.01	.01	.01
19	0	.02	.04	.02	.27	2.4	.15	.02	.01	.01	.01	0
20	.01	.02	.04	.01	.08	1.9	.12	.03	.01	.01	.01	0
21	0	.01	.04	.01	.05	1.8	.09	.02	.01	.01	.01	.01
22	0	.04	.04	.01	.05	3.4	.08	.02	.01	.01	.01	.01
23	.01	.01	.04	.01	.06	1.9	.09	.01	.01	.01	.02	0
24	.01	.01	.03	.01	.13	.79	.09	.01	.01	.01	.01	0
25	0	.01	.03	.01	.10	2.0	.14	.01	.01	.01	.01	0
26	.52	.01	.03	.02	.07	2.6	.09	.01	.01	.05	.01	0
27	.60	.01	.03	.02	.06	1.0	.08	.01	.01	.02	.01	0
28	3.0	.01	.64	.01	.05	.25	.09	.01	.01	.01	.01	0
29	14	.02	1.5	.01	---	.05	.15	.01	.01	.02	.01	.01
30	.37	.01	.05	.19	---	.05	.13	.01	.01	.01	.01	.01
31	.04	---	.03	.04	---	.05	---	.01	---	.01	.01	---
TOTAL	18.65	1.66	16.32	1.09	8.11	71.32	75.34	1.01	.35	.37	.35	.23
MEAN	.60	.055	.53	.035	.29	2.30	2.51	.033	.012	.012	.011	.008
MAX	14	.90	11	.19	1.7	9.4	38	.11	.05	.05	.03	.02
MIN	0	.01	.01	.01	.02	.05	.05	.01	.01	.01	.01	0
AC-FT	37	3.3	32	2.2	16	141	149	2.0	.7	.7	.7	.5

CAL YR 1974 TOTAL 119.80 MEAN .33 MAX 21 MIN 0 AC-FT 238
WTR YR 1975 TOTAL 194.80 MEAN .53 MAX 38 MIN 0 AC-FT 386

11023330 LOS PENASQUITOS CREEK BELOW POWAY CREEK, NEAR POWAY, CALIF.

LOCATION.--Lat 32°56'58", long 117°04'08", in NW¼NE¼NE¼ sec.22, T.14 S., R.2 W., San Diego County, on right bank at Cobblestone Creek Road, 0.2 mi (0.3 km) downstream from confluence of Poway and Pomerado Creeks, and 2.0 mi (3.2 km) southwest of Poway.

DRAINAGE AREA.--31.2 mi^2 (80.8 km^2).

PERIOD OF RECORD.--October 1970 to current year.

GAGE.--Water-stage recorder and rain-gage attachment. Altitude of gage is 415 ft (126 m), from topographic map.

AVERAGE DISCHARGE.--5 years, 1.57 ft^3/s (0.044 m^3/s), 1,140 acre-ft/yr (1.41 hm^3).

EXTREMES.--Current year: Maximum discharge, 651 ft^3/s (18.4 m^3/s) Apr. 8 (gage height, 7.50 ft or 2.286 m); minimum daily, 0.01 ft^3/s (0.0003 m^3/s) many days.
Period of record: Maximum discharge, 651 ft^3/s (18.4 m^3/s) Apr. 8, 1975 (gage height, 7.50 ft or 2.286 m); no flow for parts of some years.

REMARKS.--Records good except those for periods when stage-discharge relation indefinite, which are poor. Flow partly regulated by small conservation reservoirs.

DISCHARGE, IN CUBIC FEET PER SECOND, WATER YEAR OCTOBER 1974 TO SEPTEMBER 1975
MEAN VALUES

DAY	OCT	NOV	DEC	JAN	FEB	MAR	APR	MAY	JUN	JUL	AUG	SEP
1	.01	1.6	.17	.35	.15	.14	2.8	4.5	.31	.03	.01	.01
2	.01	2.9	.17	.30	.11	.12	1.1	6.0	.30	.03	.01	.01
3	.01	.28	.17	.28	6.0	.12	.90	6.4	.23	.02	.01	.01
4	.01	.17	68	.28	3.3	.12	.94	6.3	.20	.02	.01	.01
5	.01	.15	2.9	.28	1.9	1.8	3.0	5.0	.19	.02	.01	.01
6	.01	.12	1.3	.28	.41	65	20	2.7	.18	.02	.01	.01
7	.01	.11	.59	1.0	.19	4.6	13	1.3	.15	.02	.02	.01
8	.01	.12	.44	.51	.17	22	239	1.1	.16	.02	.02	.01
9	.01	.12	.35	.94	3.3	9.3	200	1.1	.19	.02	.02	.01
10	.01	.12	.28	.35	6.9	36	42	.83	.12	.01	.02	.01
11	.01	.11	.23	.35	.94	54	21	.84	.11	.01	.02	.01
12	.01	.09	.23	.23	.38	12	13	.76	.10	.01	.02	.01
13	.01	.09	.23	.21	.21	4.8	8.1	.68	.11	.01	.02	.01
14	.01	.09	.23	.21	.88	18	6.2	.55	.10	.01	.02	.01
15	.01	.12	.21	.21	.32	4.5	5.3	.53	.11	.01	.02	.01
16	.01	.14	.23	.21	.19	3.0	5.4	.55	.14	.01	.02	.01
17	.01	.14	.23	.21	.48	2.4	26	.62	.19	.01	.02	.01
18	.01	.14	.21	.21	.78	2.2	7.4	.60	.58	.01	.02	.01
19	.01	.15	.21	.17	.63	1.9	4.7	.68	.23	.01	.02	.01
20	.01	.15	.21	.15	.23	1.6	4.0	1.6	.09	.01	.02	.01
21	.01	.15	.19	.15	.17	1.3	3.5	1.1	.08	.01	.02	.01
22	.01	.28	.23	.14	.09	9.2	3.2	.71	.08	.01	.01	.01
23	.01	.23	.23	.12	.09	2.4	3.1	.62	.08	.01	.01	.01
24	.01	.15	.19	.12	.30	1.4	2.8	.59	.07	.01	.01	.01
25	.01	.15	.17	.12	.19	2.3	3.5	.51	.07	.01	.01	.01
26	.30	.15	.19	.12	.11	3.4	2.4	.53	.05	.01	.01	.01
27	2.7	.15	.21	.12	.09	1.4	2.1	.50	.04	.15	.01	.01
28	13	.15	2.9	.14	.11	1.1	2.2	.50	.03	.02	.01	.02
29	47	.15	7.2	.14	---	.91	3.3	.47	.04	.02	.01	.02
30	2.5	.15	.59	.88	---	.90	4.5	.43	.04	.01	.01	.02
31	.41	---	.35	.68	---	2.0	---	.26	---	.01	.01	---
TOTAL	66.16	8.82	89.04	9.46	28.62	269.91	654.44	48.86	4.37	.58	.46	.33
MEAN	2.13	.29	2.87	.31	1.02	8.71	21.8	1.58	.15	.019	.015	.011
MAX	47	2.9	68	1.0	6.9	65	239	6.4	.58	.15	.02	.02
MIN	.01	.09	.17	.12	.09	.12	.90	.26	.03	.01	.01	.01
AC-FT	131	17	177	19	57	535	1300	97	8.7	1.2	.9	.7
(a)	1.99	.26	2.38	.20	1.15	4.16	3.96	.08	0	.15	0	0

CAL YR 1974 TOTAL 587.52 MEAN 1.61 MAX 116 MIN 0 AC-FT 1170
WTR YR 1975 TOTAL 1181.05 MEAN 3.24 MAX 239 MIN .01 AC-FT 2340

a Precipitation, in inches.
NOTE.--Stage-discharge relation indefinite Mar. 6 to Apr. 25, Apr. 29 to May 5.

11023340 LOS PENASQUITOS CREEK NEAR POWAY, CALIF.

LOCATION.--Lat 32°56'35", long 117°07'15", in Los Penasquitos Grant, San Diego County, on left bank 1.0 mi (1.6 km) downstream from Cypress Creek, and 5.5 mi (8.8 km) southwest of Poway.

DRAINAGE AREA.--42.1 mi^2 (109 km^2).

PERIOD OF RECORD.--October 1964 to current year.

GAGE.--Water-stage recorder and crest-stage gage. Altitude of gage is 260 ft (79.2 m), from topographic map.

AVERAGE DISCHARGE.--11 years, 3.72 ft^3/s (0.105 m^3/s), 2,700 acre-ft/yr (3.33 km^3/yr).

EXTREMES.--Current year: Maximum discharge, 704 ft^3/s (19.9 m^3/s) Apr. 8 (gage height, 5.41 ft or 1.649 m, from floodmark); minimum daily, 0.02 ft^3/s (0.001 m^3/s) on many days.
Period of record: Maximum discharge, 2,100 ft^3/s (59.5 m^3/s) Dec. 6, 1966 (gage height, 6.90 ft or 2.103 m in gage well, 7.70 ft or 2.35 m, from profile of floodmarks), from rating curve extended above 400 ft^3/s (11.3 m^3/s) on basis of slope-area measurement at gage height 6.23 ft (1.90 m) in gage well, 7.40 ft (2.26 m), from outside gage; no flow May 16, 17, 1968, July 1, 1972.

REMARKS.--Records fair. Flow partly regulated by several conservation reservoirs above station. Pumping from wells along stream for irrigation. Flow augmented by reclaimed water from Poway area.

DISCHARGE, IN CUBIC FEET PER SECOND, WATER YEAR OCTOBER 1974 TO SEPTEMBER 1975
MEAN VALUES

DAY	OCT	NOV	DEC	JAN	FEB	MAR	APR	MAY	JUN	JUL	AUG	SEP
1	.04	.82	.15	.45	.79	.26	2.9	4.2	.29	.03	.02	.02
2	.04	2.8	.15	.36	.44	.25	1.8	4.4	.27	.03	.02	.02
3	.04	1.0	.15	.31	6.4	.24	1.2	6.4	.27	.03	.02	.02
4	.04	.50	84	.28	7.8	.19	1.1	6.3	.23	.03	.02	.02
5	.04	.33	21	.27	4.3	.45	1.6	5.2	.20	.03	.02	.02
6	.04	.29	3.1	.26	1.7	43	15	3.0	.19	.03	.02	.03
7	.05	.22	1.4	.71	.77	22	19	1.7	.19	.03	.02	.03
8	.05	.19	.82	1.1	.57	20	300	1.2	.19	.03	.02	.03
9	.06	.19	.50	.65	2.8	13	240	1.2	.16	.03	.02	.03
10	.06	.17	.42	.62	15	27	62	1.1	.15	.03	.02	.03
11	.06	.16	.34	.41	2.9	65	31	1.0	.13	.03	.02	.03
12	.05	.15	.32	.30	1.1	33	16	1.0	.11	.23	.02	.03
13	.05	.14	.30	.22	.74	6.1	10	.91	.12	.52	.02	.03
14	.05	.13	.28	.20	.74	17	7.6	.86	.11	.57	.02	.03
15	.05	.13	.26	.20	1.1	7.3	6.2	.82	.11	.24	.02	.04
16	.29	.15	.22	.20	.61	3.2	5.2	.82	.11	.04	.02	.04
17	.23	.15	.22	.21	.46	2.7	23	.82	.17	.02	.02	.03
18	.08	.15	.21	.23	.51	2.3	10	.78	.20	.02	.02	.03
19	.07	.15	.21	.23	.68	2.2	5.2	.82	.45	.02	.02	.03
20	.06	.15	.21	.25	.62	1.9	4.2	.91	.29	.02	.02	.02
21	.07	.53	.20	.23	.49	1.6	3.6	1.1	.17	.02	.02	.05
22	.07	.33	.21	.23	.39	7.8	3.2	1.1	.13	.02	.02	.03
23	.07	.23	.20	.39	.28	5.3	3.1	.90	.10	.02	.02	.04
24	.07	.17	.18	.27	.26	2.1	2.7	.74	.08	.02	.02	.04
25	.07	.15	.16	.20	.29	1.8	3.1	.63	.06	.02	.02	.02
26	.74	.15	.15	.23	.34	3.6	2.8	.60	.05	.02	.02	.02
27	2.6	.15	.16	.23	.28	2.2	2.1	.53	.04	.02	.02	.02
28	4.7	.15	2.7	.23	.27	1.6	1.9	.48	.03	.02	.02	.02
29	56	.15	15	.22	---	1.2	1.9	.40	.03	.02	.02	.02
30	14	.15	2.4	.36	---	1.1	3.8	.35	.03	.02	.02	.02
31	1.2	---	.79	1.4	---	1.2	---	.33	---	.02	.02	---
TOTAL	81.04	10.13	136.41	11.45	52.63	296.59	791.2	50.60	4.66	2.23	.62	.84
MEAN	2.61	.34	4.40	.37	1.88	9.57	26.4	1.63	.16	.072	.020	.028
MAX	56	2.8	84	1.4	15	65	300	6.4	.45	.57	.02	.05
MIN	.04	.13	.15	.20	.26	.19	1.1	.33	.03	.02	.02	.02
AC-FT	161	20	271	23	104	588	1570	100	9.2	4.4	1.2	1.7

CAL YR 1974 TOTAL 768.72 MEAN 2.11 MAX 163 MIN .03 AC-FT 1520
WTR YR 1975 TOTAL 1438.40 MEAN 3.94 MAX 300 MIN .02 AC-FT 2850

Peak discharge (base, 60 ft^3/s)

Date	Time	G.H.	Discharge	Date	Time	G.H.	Discharge
10-29	0830	3.64	194	3-11	1430	3.31	135
12-4	1430	4.64	440	4-8	unknown	5.41	704
3-6	1500	3.52	168				

NOTE.--No gage-height record Apr. 8-10.

11025500 SANTA YSABEL CREEK NEAR RAMONA, CALIF.

LOCATION.--Lat 33°06'25", long 116°51'55", in SW¼NW¼NE¼ sec.27, T.12 S., R.1 E., San Diego County, on left bank 1.6 mi (2.6 km) downstream from Temescal Creek, and 4.5 mi (7.2 km) north of Ramona.

DRAINAGE AREA.--112 mi^2 (290 km^2).

PERIOD OF RECORD.--February 1912 to February 1923, October 1943 to current year. Monthly discharge only for February 1912, published in WSP 1315-B.

GAGE.--Water-stage recorder and concrete cutoff wall, repaired at times. Datum of gage is 847.88 ft (258.434 m) above mean sea level (levels by city of San Diego Water Department). See WSP 1315-A for history of changes prior to Feb. 3, 1923.

EXTREMES.--Current year: Maximum discharge, 79 ft^3/s (2.24 m^3/s) Apr. 9 (gage height, 3.11 ft or 0.948 m); no flow for many days.
Period of record: Maximum discharge, 28,400 ft^3/s (804 m^3/s) Jan. 27, 1916 (gage height, 14.0 ft or 4.27 m, datum then in use), from rating curve extended above 1,500 ft^3/s (42.5 m^3/s) on basis of slope-conveyance computation of maximum flow; no flow at times in some years.

REMARKS.--Records fair. Flow regulated by Sutherland Reservoir (see sta 11024000) since July 1954. Some small diversions above station.

DISCHARGE, IN CUBIC FEET PER SECOND, WATER YEAR OCTOBER 1974 TO SEPTEMBER 1975
MEAN VALUES

DAY	OCT	NOV	DEC	JAN	FEB	MAR	APR	MAY	JUN	JUL	AUG	SEP
1	0	.01	.01	.01	.01	.02	4.3	2.5	.95	.01	.01	0
2	0	.01	.01	.02	.02	.01	8.6	2.3	.82	.01	0	0
3	0	.01	.01	.02	.02	.01	3.4	2.3	.74	.01	0	0
4	0	.01	.24	.02	.01	.01	2.3	2.3	.66	.01	0	0
5	0	.01	.01	.02	.01	.01	2.0	2.6	.58	.01	.01	0
6	0	.01	.01	.04	.01	.50	9.4	2.3	.52	.01	.01	0
7	0	.01	.01	.02	.01	.59	14	2.0	.46	.01	0	.01
8	.01	.01	.01	.01	.02	1.5	23	1.8	.40	.01	0	.01
9	.01	.01	.01	.01	.02	13	60	1.7	.36	.01	0	.01
10	0	.01	.01	.01	.01	12	37	1.6	.32	.01	0	0
11	.01	.01	.01	.02	.01	28	21	1.4	.28	.01	0	0
12	.01	.01	.01	.02	.01	18	15	1.1	.25	.01	0	0
13	0	.01	.01	.04	.02	8.6	11	1.1	.23	.01	0	0
14	0	.01	.01	.06	.04	12	8.3	.99	.21	.01	0	0
15	0	.01	.01	.06	.04	11	7.3	1.1	.18	.01	0	0
16	0	.01	.01	.04	.04	5.4	7.1	1.1	.14	.01	0	0
17	0	.01	.01	.01	.04	4.3	14	1.1	.10	.01	0	0
18	0	.01	.01	.01	.04	3.1	16	1.1	.07	.01	0	0
19	0	.01	.01	.01	.04	2.4	8.6	1.1	.06	.01	0	0
20	0	.01	.01	.02	.04	1.8	6.5	1.5	.04	.01	0	0
21	0	.01	.01	.04	.01	1.5	5.6	2.5	.04	.01	0	0
22	0	.01	.04	.02	.01	2.6	5.3	2.2	.06	.01	0	0
23	.01	.01	.04	.04	.01	4.0	5.0	1.6	.04	.01	0	0
24	0	.01	.04	.04	.02	2.3	4.3	1.4	.02	.01	0	0
25	.01	.01	.04	.04	.02	1.9	4.3	1.1	.01	.01	0	0
26	.01	.02	.04	.01	.02	3.1	4.8	1.1	.01	.01	0	0
27	.01	.04	.02	.01	.02	2.5	4.3	.99	.01	.01	0	0
28	.01	.01	.01	.01	.02	1.4	3.6	.99	.01	.01	0	0
29	.01	.01	.01	.02	---	.99	3.1	.99	.01	.01	0	0
30	.01	.01	.01	.02	---	.99	2.8	.99	.01	.01	0	.01
31	.01	---	.01	.01	---	1.1	---	.99	---	.01	0	---
TOTAL	.12	.34	.70	.73	.59	144.63	321.9	47.84	7.59	.31	.03	.04
MEAN	.004	.011	.023	.024	.021	4.67	10.7	1.54	.25	.010	.001	.001
MAX	.01	.04	.24	.06	.04	28	60	2.6	.95	.01	.01	.01
MIN	0	.01	.01	.01	.01	.01	2.0	.99	.01	.01	0	0
AC-FT	.2	.7	1.4	1.4	1.2	287	638	95	15	.6	.06	.08

CAL YR 1974 TOTAL 291.68 MEAN .80 MAX 115 MIN 0 AC-FT 579
WTR YR 1975 TOTAL 524.82 MEAN 1.44 MAX 60 MIN 0 AC-FT 1040

11026000 SANTA YSABEL CREEK NEAR SAN PASQUAL, CALIF.

LOCATION.--Lat 33°05'10", long 116°54'56", in NE¼NW¼SE¼ sec.31, T.12 S., R.1 E., San Diego County, on left bank 1.1 mi (1.8 km) downstream from Clevenger Canyon, and 2 mi (3 km) east of San Pasqual.

DRAINAGE AREA.--128 mi^2 (332 km^2).

PERIOD OF RECORD.--December 1905 to September 1910 and May 1911 to September 1912 (published as "near Escondido"), April 1947 to November 1955 (irrigation seasons only), April 1956 to current year. Records for October to December 1910, published in WSP 447, have been found to be in error and should not be used.

GAGE.--Water-stage recorder. Concrete control since April 1947. Altitude of gage is 510 ft (155 m), from topographic map. Dec. 17, 1905, to Sept. 30, 1912, nonrecording gage at site 0.2 mi (0.3 km) downstream at different datum.

EXTREMES.--Current year: Maximum discharge, 78 ft^3/s (2.21 m^3/s) Apr. 9 (gage height, 2.22 ft or 0.677 m); no flow Oct. 1 to Jan. 16, July 2 to Sept. 30.
Period of record (1905-12, 1947 to current year): Maximum discharge observed, 8,000 ft^3/s (227 m^3/s) Mar. 24, 1906 (gage height, 6.3 ft or 1.92 m, site and datum then in use); no flow at times in most years.

REMARKS.--Records good. Flow regulated by Sutherland Reservoir, capacity, 29,680 acre-ft (120 hm^3) since July 1954. Small diversion above station.

DISCHARGE, IN CUBIC FEET PER SECOND, WATER YEAR OCTOBER 1974 TO SEPTEMBER 1975
MEAN VALUES

DAY	OCT	NOV	DEC	JAN	FEB	MAR	APR	MAY	JUN	JUL	AUG	SEP
1				0	.03	.05	2.5	3.2	.91	.01		
2				0	.03	.05	6.9	3.0	.51	0		
3				0	.10	.05	4.1	2.9	.37	0		
4				0	.08	.05	3.0	2.8	.22	0		
5				0	.11	.06	2.7	2.7	.13	0		
6				0	.09	2.6	5.6	2.6	.08	0		
7				0	.07	.79	10	2.4	.06	0		
8				0	.06	.57	20	2.3	.04	0		
9				0	.06	6.0	54	2.1	.04	0		
10				0	.10	11	33	2.0	.03	0		
11				0	.06	22	17	1.8	.03	0		
12				0	.05	15	13	1.6	.03	0		
13				0	.05	7.6	9.5	1.5	.03	0		
14				0	.05	7.9	7.9	1.4	.03	0		
15				0	.05	9.2	7.3	1.4	.03	0		
16				0	.04	5.9	6.9	1.3	.03	0		
17				.02	.03	4.5	10	1.4	.03	0		
18				.02	.03	3.8	12	1.3	.04	0		
19				.02	.03	3.1	8.4	1.3	.05	0		
20				.03	.04	2.7	6.7	1.4	.04	0		
21				.03	.06	2.4	6.1	1.5	.04	0		
22				.03	.04	2.9	5.7	1.6	.04	0		
23				.03	.03	3.7	5.6	1.5	.04	0		
24				.03	.04	3.1	5.0	1.4	.04	0		
25				.02	.05	2.6	4.9	1.3	.03	0		
26				.02	.05	3.1	5.1	1.3	.02	0		
27				.03	.05	3.3	4.7	1.3	.02	0		
28				.03	.05	2.5	4.2	1.3	.02	0		
29				.03	---	2.0	3.8	1.2	.02	0		
30				.03	---	1.8	3.5	1.2	.01	0		
31		---		.03	---	1.8	---	1.1	---	0		---
TOTAL	0	0	0	.40	1.53	132.12	289.1	55.1	3.01	.01	0	0
MEAN	0	0	0	.013	.055	4.26	9.64	1.78	.10	.0003	0	0
MAX	0	0	0	.03	.11	22	54	3.2	.91	.01	0	0
MIN	0	0	0	0	.03	.05	2.5	1.1	.01	0	0	0
AC-FT	0	0	0	.8	3.0	262	573	109	6.0	.02	0	0

CAL YR 1974 TOTAL 328.04 MEAN .90 MAX 135 MIN 0 AC-FT 651
WTR YR 1975 TOTAL 481.27 MEAN 1.32 MAX 54 MIN 0 AC-FT 955

11027000 GUEJITO CREEK NEAR SAN PASQUAL, CALIF.

LOCATION.--Lat 33°06'57", long 116°57'08", in NW¼NW¼SE¼ sec.23, T.12 S., R.1 W., San Diego County, on left bank 0.3 mi (0.5 km) upstream from Rockwood Canyon Creek, and 1.8 mi (2.9 km) north of San Pasqual.

DRAINAGE AREA.--22.5 mi^2 (58.3 km^2).

PERIOD OF RECORD.--December 1946 to current year.

GAGE.--Water-stage recorder and concrete control. Altitude of gage is 560 ft (171 m), from topographic map.

AVERAGE DISCHARGE.--28 years (1947-75), 1.41 ft^3/s (0.0399 m^3/s), 1,020 acre-ft/yr (1.26 hm^3/yr).

EXTREMES.--Current year: Maximum discharge, 53 ft^3/s (1.50 m^3/s) Mar. 8 (gage height, 2.60 ft or 0.793 m); no flow many days.
Period of record: Maximum discharge, 2,920 ft^3/s (82.7 m^3/s) Dec. 6, 1966 (gage height, 6.78 ft or 2.067 m), from rating curve extended above 440 ft^3/s (12.5 m^3/s) on basis of slope-area measurements at gage heights 5.83 ft (1.777 m) and 6.30 ft (1.920 m); no flow at times in most years.

REMARKS.--Records fair. No regulation above station. Diversion for irrigation 0.2 mi (0.3 km) upstream.

DISCHARGE, IN CUBIC FEET PER SECOND, WATER YEAR OCTOBER 1974 TO SEPTEMBER 1975
MEAN VALUES

DAY	OCT	NOV	DEC	JAN	FEB	MAR	APR	MAY	JUN	JUL	AUG	SEP
1	0	0	.01	.07	.23	.21	1.3	.54	.14	.05	.01	
2	0	0	.01	.07	.18	.21	.86	.49	.14	.05	.01	
3	0	0	.01	.07	.85	.21	.59	.47	.13	.05	.01	
4	0	0	1.5	.07	1.4	.21	.50	.47	.12	.05	.01	
5	0	0	.38	.08	1.3	.24	.64	.46	.11	.05	.01	
6	0	0	.07	.08	.72	4.1	1.7	.41	.11	.04	.01	
7	0	0	.05	.10	.48	2.1	1.7	.37	.11	.04	.01	
8	.01	0	.04	.12	.39	13	16	.35	.10	.04	.01	
9	.01	0	.03	.12	.62	5.7	23	.34	.11	.04	.01	
10	0	0	.03	.10	3.8	5.9	7.7	.31	.11	.04	.01	
11	0	0	.03	.11	1.1	20	3.4	.28	.10	.04	.02	
12	0	0	.02	.10	.67	6.1	2.5	.25	.08	.03	.03	
13	0	0	.02	.09	.53	2.3	2.0	.23	.09	.03	.03	
14	0	0	.02	.08	.54	3.2	1.8	.22	.08	.03	.02	
15	0	0	.03	.08	.50	2.2	1.6	.23	.08	.03	.01	
16	0	0	.03	.08	.41	1.4	1.6	.25	.08	.03	.01	
17	0	0	.03	.08	.37	1.1	2.0	.28	.10	.03	.01	
18	0	0	.03	.08	.32	.89	1.8	.25	.29	.03	.01	
19	0	0	.04	.08	.30	.79	1.4	.29	.22	.03	.01	
20	0	0	.04	.07	.30	.71	1.2	.56	.18	.03	.01	
21	0	0	.04	.07	.32	.63	1.1	.59	.15	.03	.01	
22	0	0	.06	.07	.24	1.2	.98	.41	.13	.03	0	
23	0	0	.05	.07	.22	1.1	.93	.32	.11	.03	0	
24	0	0	.05	.06	.24	.71	.87	.28	.10	.03	0	
25	0	0	.05	.06	.24	.77	.93	.23	.09	.03	0	
26	0	.01	.05	.08	.23	.94	.87	.20	.08	.03	0	
27	.01	.01	.05	.08	.23	.63	.75	.19	.07	.03	0	
28	.01	.01	.12	.08	.23	.51	.68	.18	.06	.02	0	
29	.02	.01	.24	.08	---	.42	.63	.17	.06	.01	0	
30	.01	.01	.14	.11	---	.39	.59	.15	.05	.01	0	
31	.01	---	.10	.25	---	.51	---	.14	---	.01	0	---
TOTAL	.08	.05	3.37	2.74	16.96	78.38	81.62	9.91	3.38	1.02	.27	0
MEAN	.003	.002	.11	.088	.61	2.53	2.72	.32	.11	.033	.009	0
MAX	.02	.01	1.5	.25	3.8	20	23	.59	.29	.05	.03	0
MIN	0	0	.01	.06	.18	.21	.50	.14	.05	.01	0	0
AC-FT	.2	.10	6.7	5.4	34	155	162	20	6.7	2.0	.5	0

CAL YR 1974 TOTAL 165.32 MEAN .43 MAX 39 MIN 0 AC-FT 308
WTR YR 1975 TOTAL 197.78 MEAN .54 MAX 23 MIN 0 AC-FT 392

Peak discharge (base, 30 ft^3/s)

Date	Time	G.H.	Discharge	Date	Time	G.H.	Discharge
3-8	1515	2.60	53	4-8	1515	2.46	39
3-11	0200	2.40	34				

11028500 SANTA MARIA CREEK NEAR RAMONA, CALIF.

LOCATION.--Lat 33°03'08", long 116°56'41", in SE¼SE¼SE¼ sec.11, T.13 S., R.1 W., San Diego County, on left bank 3.8 mi (6.1 km) northwest of Ramona, and 4.6 mi (7.4 km) upstream from mouth.

DRAINAGE AREA.--57.6 mi^2 (149.2 km^2).

PERIOD OF RECORD.--November 1912 to September 1920, October 1946 to current year.

GAGE.--Water-stage recorder. Concrete control since October 1946. Datum of gage is 1,294.44 ft (394.545 m) above mean sea level. Prior to Oct. 1, 1946, at datum 1.78 ft (0.543 m) lower.

AVERAGE DISCHARGE.--36 years (1913-20, 1946-75), 3.33 ft^3/s (0.0943 m^3/s), 2,410 acre-ft/yr (2.97 hm^3/yr).

EXTREMES.--Current year: Maximum discharge, 105 ft^3/s (2.97 m^3/s) Apr. 8 (gage height, 2.24 ft or 0.683 m); no flow most of year.
Period of record: Maximum discharge, 7,140 ft^3/s (202 m^3/s) Jan. 27, 1916 (gage height, 14.1 ft or 4.298 m, from floodmarks, present datum), from rating curve extended above 600 ft^3/s (17.0 m^3/s) on basis of slope-area measurement of maximum flow; no flow for several months in each year.

REMARKS.--Records fair. No regulation above station.

DISCHARGE, IN CUBIC FEET PER SECOND, WATER YEAR OCTOBER 1974 TO SEPTEMBER 1975
MEAN VALUES

DAY	OCT	NOV	DEC	JAN	FEB	MAR	APR	MAY	JUN	JUL	AUG	SEP
1						0	0	.11	.01			
2						0	0	.08	.01			
3						0	0	.03	.01			
4						0	0	.03	.01			
5						0	0	.03	.01			
6						0	0	.03	0			
7						0	.01	.03	.01			
8						0	24	.03	.01			
9						0	43	.03	.01			
10						0	20	.02	.01			
11						6.2	4.2	.02	.01			
12						11	1.9	.02	.01			
13						1.3	1.2	.02	.02			
14						1.7	.96	.02	.01			
15						1.7	.80	.02	.02			
16						.57	.80	.02	.02			
17						.20	1.3	.02	.03			
18						.08	2.0	.02	.01			
19						.05	.96	.02	.01			
20						.05	.65	.03	.01			
21						.03	.50	.02	.01			
22						.03	.43	.02	0			
23						.03	.43	.02	0			
24						.03	.37	.02	0			
25						.03	.37	.01	0			
26						.01	.32	.01	0			
27						.01	.20	.02	0			
28						0	.20	.01	0			
29					---	0	.16	.01	0			
30					---	0	.11	0	0			
31		---			---	0	---	.01	---			---
TOTAL	0	0	0	0	0	23.02	104.87	.78	.25	0	0	0
MEAN	0	0	0	0	0	.74	3.50	.025	.008	0	0	0
MAX	0	0	0	0	0	11	43	.11	.03	0	0	0
MIN	0	0	0	0	0	0	0	0	0	0	0	0
AC-FT	0	0	0	0	0	46	208	1.5	.5	0	0	0

CAL YR 1974 TOTAL 147.91 MEAN .41 MAX 102 MIN 0 AC-FT 293
WTR YR 1975 TOTAL 128.92 MEAN .35 MAX 43 MIN 0 AC-FT 256

Peak discharge (base, 20 ft^3/s).--Mar. 12 (0430) 61 ft^3/s (2.02 ft); Apr. 8 (1830) 105 ft^3/s (2.24 ft).

11030020 LAKE HODGES NEAR ESCONDIDO, CALIF.

LOCATION.--Lat 33°02'41", long 117°07'39", in SE¼SE¼NW¼ sec.18, T.13 S., R.2 W., San Diego County, on face near left end of Hodges Dam on San Dieguito River, and 6.4 mi (10.3 km) southwest of Escondido.

DRAINAGE AREA.--303 mi^2 (785 km^2).

PERIOD OF RECORD.--October 1945 to September 1968 published with San Dieguito River at Lake Hodges (sta 11030000). October 1972 to current year. Records of monthend gage heights February 1919 to September 1945, in files of San Diego County Department of Sanitation and Flood Control.

GAGE.--Water-stage recorder. Datum of gage is 200.0 ft (60.96 m) above mean sea level; gage readings have been reduced to elevations above mean sea level. Prior to Oct. 1, 1972, nonrecording gage at site 800 ft (244 m) upstream on right bank at same datum.

EXTREMES.--Current year: Maximum contents observed, 3,310 acre-ft (4.08 hm^3) May 5 (elevation, 266.35 ft or 81.183 m); minimum, 905 acre-ft (1.12 hm^3) Oct. 22 (elevation, 251.70 ft or 76.718 m).
Period of record (1945-68, 1972 to current year): Maximum contents, 37,930 acre-ft (46.8 hm^3) Apr. 1, 1946 (elevation, 315.30 ft or 96.103 m); minimum, 114 acre-ft (141,000 m^3) Oct. 31, 1965 (elevation, 235.80 ft or 71.872 m).

REMARKS.--Reservoir is formed by multiple-arch reinforced concrete dam, constructed in 1917-19. Storage began in February 1919. Capacity table based on a 1948 survey; table dated Sept. 18, 1951. Capacity of reservoir at spillway level, 33,550 acre-ft (41.4 hm^3), elevation, 315.0 ft (96.01 m). Dead storage below lowest outlet, 1,160 acre-ft (1.43 hm^3), elevation, 254.0 ft (77.42 m) included in these records. Reservoir can be drawn down to 207 acre-ft (255,000 m^3), elevation, 240.0 ft (73.15 m) by pumping. Water drawn from Lake Hodges passes through a conduit to San Dieguito re-regulating reservoir, from which it is released as required for municipal use. Flow regulated since July 1954 by Sutherland Reservoir (see sta 11024000). Diversions for irrigation above Lake Hodges.

COOPERATION.--Gage heights furnished by San Diego County Department of Sanitation and Flood Control.

MONTHEND ELEVATION AND CONTENTS, WATER YEAR OCTOBER 1974 TO SEPTEMBER 1975

Date	Elevation (feet)a	Contents (acre-feet)	Change in contents (acre-feet)
Sept. 30	251.95	930	--
Oct. 31	252.00	935	+5
Nov. 30	251.95	930	-5
Dec. 31	254.50	1,220	+290
CAL YR 1974	--	--	+423
Jan. 31	255.40	1,330	+110
Feb. 28	257.85	1,680	+350
Mar. 31	262.70	2,540	+860
Apr. 30	266.30	3,300	+760
May 31	266.10	3,250	-50
June 30	264.45	2,890	-360
July 31	262.85	2,570	-320
Aug. 31	262.25	2,450	-120
Sept. 30	261.80	2,370	-80
WTR YR 1975	--	--	+1,440

a Elevation at 0800.

11030700 LAKE WOHLFORD NEAR ESCONDIDO, CALIF.

LOCATION.--Lat 33°10'00", long 117°00'14", in NW¼NE¼ sec.5, T.12 S., R.1 W., San Diego County, on face of Lake Wohlford Dam, 330 ft (101 m) left of spillway, 3.9 mi (6.3 km) southeast of Valley Center Post Office, and 5.7 mi (9.2 km) northeast of Escondido.

DRAINAGE AREA.--7.96 mi^2 (20.62 km^2).

PERIOD OF RECORD.--October 1972 to current year. October 1933 to September 1972 in files of San Diego County Department of Sanitation and Flood Control.

GAGE.--Water-stage recorder. Datum of gage is 1,400.0 ft (426.72 m) above mean sea level (levels by city of Escondido Engineering Department); gage readings have been reduced to elevation above mean sea level. Prior to Oct. 1, 1972, nonrecording gage at same site at datum 15.0 ft (4.57 m) lower.

EXTREMES.--Current year: Maximum contents observed, 4,000 acre-ft (4.93 hm^3) May 24 (elevation, 1,464.9 ft or 446.50 m); minimum, 1,210 acre-ft (1.49 hm^3) Jan. 6 (elevation, 1,442.6 ft or 439.70 m).
Period of record: Maximum contents, 6,940 acre-ft (8.56 hm^3) Apr. 30 to May 10, 1952 (elevation, 1,480.0 ft or 451.10 m); minimum, 809 acre-ft (997,000 m^3) Dec. 1, 1953 (elevation, 1,447.5 ft or 441.20 m).

REMARKS.--Reservoir is formed by earthfill dam riprapped upstream and downstream, with concrete spillway anchored to natural rock. Dam was completed in 1932. Capacity table dated March 1955. Capacity at spillway level, 6,940 acre-ft (8.56 hm^3), elevation, 1,480.0 ft (451.10 m). Dead storage below lowest outlet, 131 acre-ft (162,000 m^3), elevation, 1,420.0 ft (432.82 m). Reservoir storage includes supplemental water diverted from the San Luis Rey River via Escondido Mutual Water Co.'s canal to Lake Wohlford Reservoir. Stored water is released for municipal use by Vista Irrigation District and city of Escondido.

COOPERATION.--Gage heights furnished by San Diego County Department of Sanitation and Flood Control.

MONTHEND ELEVATION AND CONTENTS, WATER YEAR OCTOBER 1974 TO SEPTEMBER 1975

Date	Elevation (feet)a	Contents (acre-feet)	Change in contents (acre-feet)
Sept. 30	1,454.1	2,400	--
Oct. 31	1,449.0	1,800	-600
Nov. 30	1,444.7	1,380	-420
Dec. 31	1,443.0	1,240	-140
CAL YR 1974	--	--	-670
Jan. 31	1,444.9	1,400	+160
Feb. 28	1,451.3	2,050	+650
Mar. 31	1,459.1	3,090	+1,040
Apr. 30	1,464.0	3,850	+760
May 31	1,463.9	3,830	-20
June 30	1,463.1	3,710	-120
July 31	1,459.7	3,170	-540
Aug. 31	1,458.1	2,940	-230
Sept. 30	1,450.0	1,910	-1,030
WTR YR 1975	--	--	-490

a Elevation at 0800.

11031500 AGUA CALIENTE CREEK NEAR WARNER SPRINGS, CALIF.

LOCATION.--Lat 33°17'19", long 116°39'11", in San Jose del Valle Grant, San Diego County, on downstream end of right pier of bridge on State Highway 79, 1.2 mi (1.9 km) upstream from Canada Verde Creek, and 1.2 mi (1.9 km) northwest of Warner Springs.

DRAINAGE AREA.--19.0 mi^2 (49.2 km^2).

PERIOD OF RECORD.--February 1961 to current year.

GAGE.--Water-stage recorder. Altitude of gage is 2,950 ft (899 m), from topographic map. Prior to Jan. 29, 1966, at site 120 ft (37 m) upstream at same datum, used as supplementary gage since Dec. 12, 1968.

AVERAGE DISCHARGE.--14 years, 1.05 ft^3/s (0.0297 m^3/s), 761 acre-ft/yr (938,000 m^3/yr).

EXTREMES.--Current year: Maximum discharge, 30 ft^3/s (0.85 m^3/s) Jan. 8 (gage height, 2.58 ft or 0.786 m); no flow most of year.
Period of record: Maximum discharge, 1,200 ft^3/s (34.0 m^3/s) Dec. 6, 1966 (gage height, 5.18 ft or 1.579 m), from rating curve extended above 240 ft^3/s (6.80 m^3/s); no flow for much of each year.

REMARKS.--Records good to 3 ft^3/s (0.085 m^3/s) and fair above. No regulation or diversion above station.

DISCHARGE, IN CUBIC FEET PER SECOND, WATER YEAR OCTOBER 1974 TO SEPTEMBER 1975

DAY	OCT	NOV	DEC	JAN	FEB	MAR	APR	MAY	JUN	JUL	AUG	SEP
1			0			0	0	.04				0
2			0			0	0	.04				0
3			0			0	0	.04				.74
4			1.6			0	0	.04				0
5			1.1			0	0	.04				0
6			0			.03	0	.04				0
7			0			.50	0	.04				.06
8			0			6.3	0	.04				0
9			0			6.1	5.0	.03				0
10			0			2.7	6.1	.03				0
11			0			2.9	5.2	.03				0
12			0			2.9	3.8	.02				0
13			0			3.1	2.4	.02				0
14			0			3.4	1.4	.02				0
15			0			3.4	1.1	.02				0
16			0			2.4	.80	.02				0
17			0			1.5	1.4	.02				0
18			0			.57	2.2	.01				0
19			0			0	2.2	.01				0
20			0			0	1.4	.03				0
21			0			0	.80	.02				0
22			0			0	.34	.01				0
23			0			0	21	.01				0
24			0			0	.17	.01				0
25			0			0	.11	.01				0
26			0			0	.14	0				0
27			0			0	.09	0				0
28			0			0	.05	0				0
29			0		------	0	.04	0				0
30			0		------	0	.04	0				0
31		------	0		------	0	------	0	------			------
TOTAL	0	0	2.7	0	0	35.80	55.78	.64	0	0	0	.80
MEAN	0	0	.087	0	0	1.15	1.86	.021	0	0	0	.027
MAX	0	0	1.6	0	0	6.3	21	.04	0	0	0	.74
MIN	0	0	0	0	0	0	0	0	0	0	0	0
AC-FT	0	0	5.4	0	0	71	111	1.3	0	0	0	1.6

CAL YR 1974 TOTAL 114.10 MEAN .31 MAX 33 MIN 0 AC-FT 226
WTR YR 1975 TOTAL 95.72 MEAN .26 MAX 21 MIN 0 AC-FT 190

Peak discharge (base, 50 ft^3/s).--No peak above base.

11033000 WEST FORK SAN LUIS REY RIVER NEAR WARNER SPRINGS, CALIF.

LOCATION.--Lat 33°17'48", long 116°45'32", in San Jose del Valle Grant, San Diego County, on left bank 0.2 mi (0.3 km) upstream from Fink Road, 2.6 mi (4.2 km) upstream from mouth, and 7.5 mi (12.1 km) west of Warner Springs.

DRAINAGE AREA.--25.5 mi^2 (66.0 km^2).

PERIOD OF RECORD.--January 1913 to November 1915, October 1956 to current year. Low-flow records not equivalent prior to Nov. 5, 1971, due to undetermined amount of underflow between sites.

GAGE. -Water-stage recorder. Altitude of gage is 2,800 ft (853 m), from topographic map. Prior to Oct. 1, 1956, at different datum. Prior to Nov. 5, 1971, at site 500 ft (152 m) downstream at same datum.

AVERAGE DISCHARGE.--20 years (1913-15, 1957-75), 7.02 ft^3/s (0.199 m^3/s), 5,090 acre-ft/yr (6.27 hm^3/yr).

EXTREMES. -Current year: Maximum discharge, 153 ft^3/s (4.33 m^3/s) Mar. 8 (gage height, 11.01 ft or 3.356 m); no flow many days.
Period of record: Maximum discharge, 4,200 ft^3/s (119 m^3/s) Dec. 6, 1966 (gage height, 11.87 ft or 3.618 m), from rating curve extended above 250 ft^3/s (7.08 m^3/s) on basis of slope-area measurement of maximum flow; no flow at times in most years.

REMARKS. -Records good except those above 20 ft^3/s (0.57 m^3/s), which are fair. No regulation or diversion above station.

REVISIONS (WATER YEARS).--WRD Calif. 1974: 1973(P).

DISCHARGE, IN CUBIC FEET PER SECOND, WATER YEAR OCTOBER 1974 TO SEPTEMBER 1975
MEAN VALUES

DAY	OCT	NOV	DEC	JAN	FEB	MAR	APR	MAY	JUN	JUL	AUG	SEP
1	0	.09	0	.02	.03	.32	22	5.2	.97	.06	.02	
2	0	.10	0	.02	.06	.39	11	4.8	.90	.06	.02	
3	0	.09	0	.02	.10	.39	8.0	4.8	.81	.06	.02	
4	0	.07	.04	.01	.71	.39	7.3	4.8	.80	.06	.02	
5	0	.05	.01	.01	1.9	.46	7.2	4.8	.74	.06	.02	
6	0	.02	.01	.01	1.5	14	15	4.8	.65	.06	.02	
7	0	.01	.01	.02	.89	12	13	4.8	.63	.05	.02	
8	0	.01	.01	.01	.65	50	13	4.6	.63	.04	.02	
9	0	0	.01	0	.91	30	55	4.4	.54	.04	.02	
10	0	0	.01	0	5.9	17	48	4.4	.46	.04	.02	
11	0	0	0	0	3.1	19	32	4.2	.46	.04	.02	
12	0	0	0	.01	2.0	16	20	4.0	.46	.04	.02	
13	0	0	0	0	1.4	15	16	4.0	.39	.04	.02	
14	0	0	0	.02	1.2	21	14	3.6	.32	.04	.02	
15	0	0	0	.02	1.0	17	12	3.6	.32	.03	.01	
16	0	0	0	.03	.86	17	11	3.6	.32	.03	.01	
17	0	0	0	.03	.69	13	16	3.6	.32	.03	.01	
18	0	0	0	.02	.61	11	29	3.6	.39	.03	.01	
19	0	0	0	.02	.54	9.0	21	3.6	.39	.02	.01	
20	0	0	0	.02	.54	8.4	12	4.1	.32	.02	.01	
21	0	0	0	.02	.54	7.8	9.6	6.1	.27	.02	.01	
22	0	0	0	.02	.46	17	8.4	5.0	.22	.02	.01	
23	0	0	0	.02	.46	13	7.8	4.4	.18	.02	0	
24	0	0	0	.02	.46	8.4	7.2	3.8	.15	.02	0	
25	0	0	0	.02	.39	14	7.8	3.3	.12	.02	0	
26	0	0	0	.02	.39	17	8.4	3.0	.12	.02	0	
27	0	0	0	.02	.39	8.4	6.7	2.8	.09	.02	0	
28	0	0	0	.02	.32	7.2	6.2	2.4	.09	.02	0	
29	.05	0	.11	.02	---	6.7	5.7	1.8	.09	.02	0	
30	.07	0	.10	.03	---	5.7	5.7	1.4	.08	.02	0	
31	.09	---	.09	.03	---	5.7	---	1.2	---	.02	0	---
TOTAL	.21	.44	.40	.53	28.00	382.25	456.0	120.5	12.23	1.07	.36	0
MEAN	.007	.015	.013	.017	1.00	12.3	15.2	3.89	.41	.035	.012	0
MAX	.09	.10	.11	.03	5.9	50	55	6.1	.97	.06	.02	0
MIN	0	0	0	0	.03	.32	5.7	1.2	.08	.02	0	0
AC-FT	.4	.9	.8	1.1	56	758	904	239	24	2.1	.7	0

CAL YR 1974 TOTAL 971.57 MEAN 2.66 MAX 154 MIN 0 AC-FT 1930
WTR YR 1975 TOTAL 1001.99 MEAN 2.75 MAX 55 MIN 0 AC-FT 1990

Peak discharge (base, 100 ft^3/s).--Mar. 8 (1700) 153 ft^3/s (11.01 ft).

11037700 PAUMA CREEK NEAR PAUMA VALLEY, CALIF.

LOCATION.--Lat 33°20'10", long 116°58'25", in Pauma Grant, San Diego County, on right bank 0.3 mi (0.5 km) downstream from unnamed tributary, and 2.2 mi (3.5 km) north of Pauma Valley.

DRAINAGE AREA.--11.0 mi^2 (28.5 km^2).

PERIOD OF RECORD.--October 1964 to current year.

GAGE.--Water-stage recorder; water-stage recorder and Parshall flume on diversion. Altitude of gage is 1,240 ft (378 m), from topographic map.

AVERAGE DISCHARGE (Creek only).--11 years, 3.30 ft^3/s (0.0935 m^3/s), 2,390 acre-ft/yr (2.95 hm^3/yr).
(Combined creek and diversion).--11 years, 3.99 ft^3/s (0.1130 m^3/s), 2,890 acre-ft/yr (3.56 hm^3/yr).

EXTREMES (Creek only).--Current year: Maximum discharge, 96 ft^3/s (2.72 m^3/s) Mar. 8 (gage height, 3.49 ft or 1.064 m); no flow Oct. 14-27, July 13 to Sept. 30.
Period of record: Maximum discharge, 2,100 ft^3/s (59.5 m^3/s) Dec. 6, 1966 (gage height, 8.60 ft or 2.62 m), from rating curve extended above 110 ft^3/s (3.1 m^3/s) on basis of slope-area measurement at gage height 7.26 ft (2.213 m); no flow much of each year.
(Combined flow).--Current year: Maximum discharge, 96 ft^3/s (2.72 m^3/s) Mar. 8; minimum daily, 0.09 ft^3/s (0.003 m^3/s) Sept. 23-27.
Period of record: Maximum discharge, 2,100 ft^3/s (59.5 m^3/s) Dec. 6, 1966; minimum daily, 0.04 ft^3/s (0.001 m^3/s) July 29 to Aug. 2, 1972.

REMARKS.--Records good. No regulation above station. Pauma Valley Water Co. diverts from a site 0.2 mi (0.3 km) upstream. For records of combined discharge of Pauma Creek and Pauma Valley Water Co.'s diversion, see following page.

DISCHARGE, IN CUBIC FEET PER SECOND, WATER YEAR OCTOBER 1974 TO SEPTEMBER 1975
MEAN VALUES

DAY	OCT	NOV	DEC	JAN	FEB	MAR	APR	MAY	JUN	JUL	AUG	SEP
1	.01	.82	.06	.12	.23	.45	9.5	5.3	.61	.06		
2	.01	.61	.06	.14	.23	.45	7.3	5.0	.55	.05		
3	.01	.50	.06	.14	.49	.40	5.5	4.7	.50	.04		
4	.01	.35	4.0	.17	1.1	.25	4.9	4.6	.50	.04		
5	.02	.26	2.6	.14	3.3	.06	4.9	4.5	.55	.03		
6	.02	.20	.90	.14	2.1	12	9.0	4.2	.45	.02		
7	.03	.12	.61	.17	1.1	9.6	6.9	4.0	.35	.02		
8	.03	.10	.50	.35	.74	31	7.7	3.8	.35	.02		
9	.04	.08	.50	.82	.90	19	12	3.5	.35	.02		
10	.04	.08	.50	.68	6.2	14	13	3.4	.20	.02		
11	.03	.08	.45	.45	3.8	13	13	3.2	.14	.01		
12	.02	.08	.45	.35	2.2	8.0	13	2.7	.14	.01		
13	.01	.06	.45	.30	1.5	6.7	18	2.1	.17	0		
14	0	.10	.45	.30	1.3	7.7	17	1.9	.14	0		
15	0	.12	.45	.30	1.1	6.3	14	1.8	.12	0		
16	0	.17	.27	.26	.98	6.4	13	1.8	.12	0		
17	0	.26	.05	.23	.90	6.0	14	1.8	.12	0		
18	0	.30	.02	.14	.74	6.7	13	2.2	.50	0		
19	0	.23	.02	.12	.68	8.0	17	1.9	.61	0		
20	0	.14	.01	.12	.68	7.4	14	2.2	.55	0		
21	0	.12	.01	.14	.68	6.1	12	2.9	.45	0		
22	0	.12	.01	.12	.61	12	11	2.2	.26	0		
23	0	.12	.01	.12	.61	8.7	9.5	1.8	.20	0		
24	0	.12	.01	.14	.55	6.1	8.5	1.4	.17	0		
25	0	.10	.01	.14	.61	8.1	8.7	1.3	.14	0		
26	0	.08	.01	.12	.55	11	8.5	1.1	.14	0		
27	0	.06	.01	.12	.50	6.7	7.2	1.1	.12	0		
28	4.3	.06	.05	.12	.45	5.8	6.6	.98	.10	0		
29	5.0	.06	.23	.12	---	5.0	6.1	1.0	.08	0		
30	2.4	.06	.17	.14	---	4.8	5.6	.74	.06	0		
31	.50	---	.10	.23	---	4.8	---	.61	---	0		---
TOTAL	12.48	5.56	13.03	6.95	34.83	242.51	310.4	79.73	8.74	.34	0	0
MEAN	.40	.19	.42	.22	1.24	7.82	10.3	2.57	.29	.011	0	0
MAX	5.0	.82	4.0	.82	6.2	31	18	5.3	.61	.06	0	0
MIN	0	.06	.01	.12	.23	.06	4.9	.61	.06	0	0	0
AC-FT	25	11	26	14	69	481	616	158	17	.7	0	0

CAL YR 1974 TOTAL 536.18 MEAN 1.47 MAX 41 MIN 0 AC-FT 1060
WTR YR 1975 TOTAL 714.57 MEAN 1.96 MAX 31 MIN 0 AC-FT 1420

Peak discharge (base, 50 ft^3/s).--Mar. 8 (1515) 96 ft^3/s (3.49 ft).

11037700 PAUMA CREEK NEAR PAUMA VALLEY, CALIF.--Continued

COMBINED DISCHARGE, IN CUBIC FEET PER SECOND, OF PAUMA CREEK AND PAUMA VALLEY WATER CO.'S DIVERSION NEAR PAUMA VALLEY, CALIF., WATER YEAR OCTOBER 1974 TO SEPTEMBER 1975

DAY	OCT	NOV	DEC	JAN	FEB	MAR	APR	MAY	JUN	JUL	AUG	SEP
1	.25	1.1	.25	.83	.84	1.0	10	6.3	2.2	.93	.24	.13
2	.26	.91	.25	.83	.84	1.0	7.9	6.0	2.2	.88	.22	.13
3	.28	.80	.25	.83	1.1	.96	6.1	5.7	2.1	.87	.19	.13
4	.31	.65	4.2	.86	1.7	1.1	5.5	5.6	2.1	.84	.18	.12
5	.34	.56	2.8	.83	3.8	1.1	5.5	5.5	2.2	.82	.16	.11
6	.34	.50	1.1	.83	2.6	13	9.6	5.2	2.1	.78	.15	.12
7	.37	.42	.78	.87	1.6	10	7.5	5.0	1.9	.73	.13	.13
8	.42	.40	.66	1.1	1.3	31	8.3	4.8	1.9	.73	.12	.21
9	.43	.38	.65	1.5	1.5	19	13	4.5	1.9	.72	.14	.26
10	.40	.38	.65	1.4	6.7	14	14	4.4	1.7	.68	.17	.29
11	.39	.36	.60	1.1	4.3	13	14	4.3	1.6	.64	.15	.30
12	.37	.34	.61	1.0	2.7	8.3	14	4.2	1.6	.61	.15	.31
13	.32	.32	.62	.96	2.1	7.2	19	3.5	1.7	.62	.15	.31
14	.27	.34	.61	.96	1.9	8.2	18	3.3	1.6	.60	.17	.27
15	.22	.32	.60	.96	1.7	6.8	15	3.3	1.6	.55	.18	.23
16	.21	.37	.67	.92	1.5	6.9	14	3.3	1.6	.51	.17	.19
17	.20	.46	.54	1.0	1.5	6.5	15	3.3	1.6	.51	.18	.17
18	.20	.50	.56	1.0	1.3	7.2	14	3.0	1.9	.54	.20	.17
19	.21	.43	.56	.90	1.2	8.5	18	3.0	2.0	.55	.21	.16
20	.25	.34	.50	.86	1.3	7.9	15	3.7	2.0	.49	.23	.17
21	.28	.32	.49	.87	1.3	6.6	13	4.4	1.8	.44	.27	.16
22	.31	.32	.50	.81	1.2	12	12	3.6	1.5	.40	.25	.13
23	.34	.32	.47	.80	1.2	9.1	11	3.2	1.4	.34	.18	.09
24	.36	.32	.47	.80	1.1	6.8	9.5	2.8	1.4	.33	.15	.09
25	.36	.29	.47	.80	1.1	8.9	9.7	2.8	1.2	.27	.13	.09
26	.35	.27	.47	.78	1.1	12	9.5	2.6	1.2	.19	.12	.09
27	.35	.25	.45	.78	1.1	7.4	8.2	2.7	1.1	.19	.12	.09
28	4.7	.25	1.1	.78	1.0	6.5	7.6	2.5	1.1	.23	.11	.10
29	5.3	.25	1.2	.78	---	5.6	7.1	2.4	1.0	.31	.12	.10
30	2.7	.25	1.1	.77	---	5.4	6.6	2.4	.96	.33	.12	.10
31	.80	---	.91	.84	---	5.4	---	2.2	---	.31	.12	---
TOTAL	21.89	12.72	25.09	28.35	50.58	258.36	337.6	119.5	50.16	16.94	5.18	4.95
MEAN	.71	.42	.81	.91	1.81	8.33	11.3	3.85	1.67	.55	.17	.17
MAX	5.3	1.1	4.2	1.5	6.7	31	19	6.3	2.2	.93	.27	.31
MIN	.20	.25	.25	.77	.84	.96	5.5	2.2	.96	.19	.11	.09
AC-FT	43	25	50	56	100	512	670	237	99	34	10	9.8

CAL YR 1974 TOTAL 687.21 MEAN 1.88 MAX 41 MIN .07 AC-FT 1360
WTR YR 1975 TOTAL 931.32 MEAN 2.55 MAX 31 MIN .09 AC-FT 1850

Peak discharge (base, 50 ft^3/s).--Mar. 8 (1515) 96 ft^3/s.

11040000 SAN LUIS REY RIVER AT MONSERATE NARROWS, NEAR PALA, CALIF.

LOCATION.--Lat 33°20'14", long 117°08'07", in SW¼SE¼NW¼ sec.6, T.10 S., R.2 W., San Diego County, on left bank 4 mi (6 km) southwest of Pala, and 6 mi (10 km) northeast of Bonsall.

DRAINAGE AREA.--373 mi^2 (966 km^2).

PERIOD OF RECORD.--December 1935 to March 1938 (fragmentary), April 1938 to November 1941, October 1946 to current year.

GAGE.--Water-stage recorder. Datum of gage is 270.82 ft (82.546 m) above mean sea level (levels by State of California). Prior to October 1946, at same site at different datum. Oct. 22, 1946, to Nov. 30, 1954, at datum 1.0 ft (0.30 m) higher.

AVERAGE DISCHARGE.--32 years (1938-41, 1946-75), 6.36 ft^3/s (0.180 m^3/s), 4,610 acre-ft/yr (5.68 hm^3/yr).

EXTREMES.--Current year: Maximum discharge, 10.5 ft^3/s (0.30 m^3/s) Mar. 8 (gage height, 3.93 ft or 1.198 m); no flow for several months.
Period of record: Maximum gage height, 8.7 ft^3/s (2.652 m) Feb. 7, 1937, datum then in use (discharge not determined); maximum discharge known, 7,000 ft^3/s (198 m^3/s) Dec. 6, 1966 (gage height, 6.70 ft or 2.042 m); no flow at times in most years.

REMARKS.--Records fair. Flow regulated by Lake Henshaw, capacity, 194,300 acre-ft (240 hm^3). Several diversions above station.

DISCHARGE, IN CUBIC FEET PER SECOND, WATER YEAR OCTOBER 1974 TO SEPTEMBER 1975
MEAN VALUES

DAY	OCT	NOV	DEC	JAN	FEB	MAR	APR	MAY	JUN	JUL	AUG	SEP
1			0		0	0	1.0	.38	.07			
2			0		0	0	.71	.43	.05			
3			0		.33	0	.64	.48	.03			
4			.91		.28	0	.64	.58	.02			
5			0		.32	0	.92	.58	0			
6			0		0	1.6	1.6	.53	0			
7			0		0	.50	1.2	.58	0			
8			0		0	2.6	3.0	.58	0			
9			0		.15	2.1	4.3	.58	0			
10			0		1.1	3.0	1.1	.48	0			
11			0		.38	2.8	.78	.43	0			
12			0		.30	3.3	.53	.38	0			
13			0		.26	.85	.53	.26	0			
14			0		.26	1.7	.34	.26	0			
15			0		.22	.78	.30	.26	0			
16			0		.16	.71	.30	.26	0			
17			0		.11	.71	.53	.26	0			
18			0		.06	.64	.30	.26	0			
19			0		.06	.64	.19	.26	0			
20			0		.06	.64	.22	.34	0			
21			0		.08	.64	.22	.30	0			
22			0		0	1.0	.22	.26	0			
23			0		0	.78	.22	.26	0			
24			0		0	.64	.22	.26	0			
25			0		0	.78	.26	.26	0			
26			0		0	.71	.26	.26	0			
27			0		0	.64	.22	.26	0			
28			0		0	.64	.26	.22	0			
29			.01		---	.53	.34	.19	0			
30			0		---	.58	.38	.19	0			
31		---	0		---	.78	---	.13	---			---
TOTAL	0	0	.92	0	4.13	30.29	21.73	10.76	.17	0	0	0
MEAN	0	0	.030	0	.15	.98	.72	.35	.006	0	0	0
MAX	0	0	.91	0	1.1	3.3	4.3	.58	.07	0	0	0
MIN	0	0	0	0	0	0	.19	.13	0	0	0	0
AC-FT	0	0	1.8	0	8.2	60	43	21	.3	0	0	0

CAL YR 1974 TOTAL 120.35 MEAN .33 MAX 9.0 MIN 0 AC-FT 239
WTR YR 1975 TOTAL 68.00 MEAN .19 MAX 4.3 MIN 0 AC-FT 135

NOTE.--No gage-height record Feb. 24 to Mar. 12.

11040200 KEYS CREEK TRIBUTARY AT VALLEY CENTER, CALIF.

LOCATION.--Lat 33°13'45", long 117°02'09", in NW¼SE¼SE¼ sec.12, T.11 S., R.2 W., San Diego County, on left bank 140 ft (43 m) upstream from bridge on Valley Center Road, 0.3 mi (0.48 km) downstream from unnamed tributary, and 0.8 mi (1.3 km) north of Valley Center.

DRAINAGE AREA.--7.65 mi^2 (19.81 km^2).

PERIOD OF RECORD.--April 1970 to current year.

GAGE.--Water-stage recorder. Datum of gage is 1,279.99 ft (390.141 m) above mean sea level (San Diego County Special District Services bench mark).

AVERAGE DISCHARGE.--5 years (1970-75), 0.33 ft^3/s (0.009 m^3/s), 239 acre-ft/yr (295,000 m^3/yr).

EXTREMES.--Current year: Maximum discharge, 107 ft^3/s (3.03 m^3/s) Mar. 10 (gage height, 3.13 ft or 0.954 m), from rating curve extended above 5.0 ft^3/s (0.14 m^3/s); no flow some days.
Period of record: Maximum discharge, 304 ft^3/s (8.61 m^3/s) Jan. 8, 1974 (gage height, 3.86 ft or 1.177 m); no flow for part of each year.
Flood of Jan. 25, 1969, 990 ft^3/s (28 m^3/s), by San Diego County Special District Services.

REMARKS.--Records good except flows above 10 ft^3/s (0.28 m^3/s), which are poor. No regulation above station. Some pumping for irrigation above station.

DISCHARGE, IN CUBIC FEET PER SECOND, WATER YEAR OCTOBER 1974 TO SEPTEMBER 1975
MEAN VALUES

DAY	OCT	NOV	DEC	JAN	FEB	MAR	APR	MAY	JUN	JUL	AUG	SEP
1	0	.08	.01	.08	.06	.07	.12	.08	.06	.03		0
2	0	.08	.01	.08	.06	.07	.12	.08	.06	.02		0
3	.01	.08	.01	.08	.09	.07	.13	.08	.06	.02		0
4	.02	.07	4.6	.08	.09	.06	.15	.10	.06	.03		0
5	.03	.07	.10	.08	.08	.08	.15	.08	.05	.02		0
6	.03	.07	.08	.08	.08	.65	.62	.08	.05	.02		0
7	.04	.07	.08	.08	.08	.12	.84	.08	.05	.02		.01
8	.05	.07	.07	.08	.08	16	29	.08	.05	.02		0
9	.04	.07	.07	.08	.15	.47	2.5	.08	.04	.02		0
10	.04	.07	.07	.08	.29	23	4.9	.08	.04	.01		0
11	.04	.07	.07	.08	.15	16	.86	.08	.03	.01		.02
12	.04	.07	.07	.08	.09	.47	.58	.08	.03	.01		.03
13	.04	.07	.06	.08	.10	.23	.47	.08	.03	.01		.02
14	.04	.06	.06	.07	.10	1.6	.39	.08	.04	.01		.01
15	.02	.22	.06	.07	.09	.18	.39	.08	.03	.01		0
16	.02	.04	.06	.07	.09	.18	.39	.09	.04	.01		0
17	.02	.03	.06	.07	.08	.15	.62	.08	.06	.01		0
18	.02	.03	.06	.07	.08	.12	.26	.07	.08	.01		0
19	.04	.03	.06	.07	.09	.12	.18	.08	.07	.02		0
20	.04	.01	.06	.07	.09	.11	.12	.10	.07	.02		0
21	.05	.03	.06	.07	.09	.10	.12	.07	.05	.02		0
22	.05	.02	.06	.07	.08	.15	.08	.07	.04	.01		0
23	.05	.02	.06	.06	.09	.12	.10	.07	.05	.01		0
24	.05	.01	.06	.06	.08	.10	.10	.07	.05	0		0
25	.05	.01	.06	.06	.07	.13	.10	.07	.04	0		0
26	.05	.01	.06	.06	.07	.11	.10	.07	.04	0		0
27	.05	.01	.06	.07	.07	.10	.10	.07	.04	0		0
28	.10	.01	.09	.07	.07	.10	.10	.07	.03	0		0
29	.77	.01	.15	.07	---	.10	.10	.07	.03	0		0
30	.10	.01	.08	.07	---	.10	.08	.06	.02	0		0
31	.08	---	.08	.08	---	.13	---	.06	---	0		---
TOTAL	1.98	1.50	6.54	2.27	2.64	60.99	43.77	2.39	1.39	.37	0	.09
MEAN	.064	.050	.21	.073	.094	1.97	1.46	.077	.046	.012	0	.003
MAX	.77	.22	4.6	.08	.29	23	29	.10	.08	.03	0	.03
MIN	0	.01	.01	.06	.06	.06	.08	.06	.02	0	0	0
AC-FT	3.9	3.0	13	4.5	5.2	121	87	4.7	2.8	.7	0	.2

CAL YR 1974 TOTAL 197.74 MEAN .54 MAX 70 MIN 0 AC-FT 392
WTR YR 1975 TOTAL 123.93 MEAN .34 MAX 29 MIN 0 AC-FT 246

Peak discharge (base, 40 ft^3/s)

Date	Time	G.H.	Discharge	Date	Time	G.H.	Discharge
10-4	1045	2.85	71	4-8	2045	3.01	89
3-8	1345	3.08	99	4-9	2015	2.98	86
3-10	2215	3.13	107				

11041000 SAN LUIS REY RIVER NEAR BONSALL, CALIF.

LOCATION.--Lat 33°15'13", long 117°14'48", in SW¼NE¼NE¼ sec.1, T.11 S., R.4 W., San Diego County, on left bank 0.7 mi (1.1 km) downstream from bridge on State Highway 76, and 2.8 mi (4.5 km) southwest of Bonsall.

DRAINAGE AREA.--513 mi^2 (1,330 km^2).

PERIOD OF RECORD.--July 1916 to September 1918 (gage heights and discharge measurements only), October 1929 to current year.

GAGE.--Water-stage recorder. Datum of gage is 108.10 ft (32.949 m) above mean sea level. See WSP 1315-B, 1735 for history of changes prior to Sept. 16, 1946.

AVERAGE DISCHARGE.--46 years (1929-75), 17.3 ft^3/s (0.490 m^3/s), 12,530 acre-ft/yr (15.4 hm^3/yr).

EXTREMES.--Current year: Maximum discharge, 181 ft^3/s (5.13 m^3/s) Apr. 9 (gage height, 8.23 ft or 2.508 m); minimum daily, 0.41 ft^3/s (0.012 m^3/s) Sept. 26.
Period of record: Maximum discharge, 18,100 ft^3/s (513 m^3/s) Mar. 3, 1938 (gage height, 16.04 ft or 4.889 m, present datum), from rating curve extended above 2,400 ft^3/s (68.0 m^3/s); no flow for part of most years.

REMARKS.--Records fair. Flow regulated by Lake Henshaw, capacity, 194,300 acre-ft (240 hm^3). Several diversions above station.

DISCHARGE, IN CUBIC FEET PER SECOND, WATER YEAR OCTOBER 1974 TO SEPTEMBER 1975
MEAN VALUES

DAY	OCT	NOV	DEC	JAN	FEB	MAR	APR	MAY	JUN	JUL	AUG	SEP
1	1.7	6.8	6.0	9.0	6.6	7.6	15	13	4.8	3.2	1.4	2.3
2	1.5	6.8	6.0	8.6	6.7	7.8	15	12	4.8	2.9	1.4	2.5
3	1.4	7.2	9.3	8.4	7.5	7.9	14	11	4.6	2.8	1.4	2.5
4	1.5	6.7	22	8.2	13	7.8	15	10	4.5	2.8	1.4	2.2
5	1.6	6.3	17	8.2	14	7.8	15	11	4.5	2.9	1.3	2.5
6	1.6	5.8	12	8.0	13	10	15	9.8	4.3	2.9	1.2	2.8
7	1.9	5.6	11	7.8	11	26	20	8.8	4.3	3.0	1.1	2.9
8	2.1	5.5	10	7.5	10	24	22	8.4	4.4	3.0	1.1	3.1
9	2.2	5.3	9.2	7.7	9.9	41	108	8.1	4.5	2.5	1.1	3.3
10	2.2	5.3	8.8	7.9	14	34	73	7.8	4.3	2.2	1.3	3.3
11	2.1	5.3	8.3	7.8	16	45	41	7.7	4.0	2.1	1.2	3.4
12	2.1	5.2	8.1	7.6	12	80	31	7.6	3.9	2.1	1.0	3.5
13	2.3	5.1	8.0	7.4	11	39	25	7.3	3.9	2.2	.98	3.6
14	2.4	5.1	8.0	7.4	11	30	28	6.9	3.9	2.4	.74	3.6
15	2.3	5.1	7.8	7.2	11	31	23	6.7	3.8	2.4	.78	3.6
16	2.1	5.3	7.8	7.2	10	26	21	6.8	4.0	2.2	.70	3.2
17	1.9	5.6	7.8	7.1	9.6	22	30	6.9	4.4	1.9	.70	2.7
18	1.7	5.9	7.6	6.9	9.2	21	36	6.6	4.6	1.8	.74	2.0
19	1.9	5.9	7.6	7.0	8.7	20	22	6.6	4.7	1.8	1.0	1.6
20	2.2	5.8	7.6	7.0	9.1	19	20	7.2	4.6	1.8	1.2	1.3
21	2.6	5.8	7.6	6.8	9.2	19	19	8.1	4.4	1.9	1.7	1.3
22	2.7	6.0	7.6	6.5	8.7	18	18	7.5	4.3	1.9	1.7	1.3
23	2.7	6.0	7.6	6.4	8.2	22	18	6.4	4.3	1.8	1.7	1.1
24	2.7	6.2	7.6	6.4	8.2	20	17	6.1	4.2	1.7	1.7	.78
25	2.8	6.2	7.6	6.3	8.2	18	16	6.0	3.8	1.6	1.7	.56
26	3.0	6.0	7.6	6.4	8.0	18	16	6.1	3.6	1.6	1.8	.41
27	3.3	5.9	7.6	6.5	7.7	18	16	5.9	3.5	1.5	1.9	.49
28	4.5	6.0	10	6.5	7.6	16	15	5.6	3.5	1.6	1.8	.67
29	6.9	6.0	12	6.5	---	15	14	5.4	3.4	1.7	1.6	.98
30	8.9	6.0	10	6.5	---	14	14	5.1	3.3	1.6	1.9	1.2
31	7.9	---	9.6	6.5	---	14	---	4.8	---	1.5	2.0	---
TOTAL	86.7	175.7	284.7	225.2	279.1	698.9	752	237.2	125.1	67.3	41.24	64.69
MEAN	2.80	5.86	9.18	7.26	9.97	22.5	25.1	7.65	4.17	2.17	1.33	2.16
MAX	8.9	7.2	22	9.0	16	80	108	13	4.8	3.2	2.0	3.6
MIN	1.4	5.1	6.0	6.3	6.6	7.6	14	4.8	3.3	1.5	.70	.41
AC-FT	172	349	565	447	554	1390	1490	470	248	133	82	128

CAL YR 1974 TOTAL 3211.09 MEAN 8.80 MAX 619 MIN .20 AC-FT 6370
WTR YR 1975 TOTAL 3037.83 MEAN 8.32 MAX 108 MIN .41 AC-FT 6030

11042000 SAN LUIS REY RIVER AT OCEANSIDE, CALIF.--Continued

PERIOD OF RECORD.--Water temperatures: October 1970 to current year.
Sediment records: October 1968 to current year.

EXTREMES.--Current year:
Sediment concentrations: Maximum daily, 83 mg/l June 10; minimum daily, 3 mg/l on several days during November, January, and February.
Sediment discharge: Maximum daily, 7.9 tons (7.2 tonnes) Apr. 9; minimum daily, 0.02 ton (0.03 tonne) Oct. 11, 12, 18, Nov. 24, 25.
Period of record:
Sediment concentrations (1969 to current year): Maximum daily, 1,220 mg/l Mar. 2, 1970; minimum daily, 2 mg/l on several days in 1972.
Sediment discharge (1969 to current year). Maximum daily, 943 tons (855 tonnes) Mar. 2, 1970; minimum daily, 0.01 ton (0.01 tonne) Nov. 4, 1969.

TEMPERATURE (DEG. C) OF WATER, WATER YEAR OCTOBER 1974 TO SEPTEMBER 1975
ONCE-DAILY

DAY	OCT	NOV	DEC	JAN	FEB	MAR	APR	MAY	JUN	JUL	AUG	SEP
1	---	---	---	---	---	---	---	---	---	---	---	---
2	---	---	---	---	---	---	---	---	---	---	---	---
3	---	13.0	---	---	9.0	12.0	13.0	---	---	---	---	---
4	---	---	13.0	---	10.0	13.0	---	---	---	---	---	---
5	---	---	12.0	---	12.0	---	---	---	---	19.0	20.0	19.0
6	---	---	---	9.0	---	14.0	---	---	17.0	---	---	---
7	---	---	---	---	12.0	15.0	11.0	---	---	---	---	---
8	---	---	---	11.0	---	15.0	12.0	15.0	---	---	---	---
9	---	---	9.0	---	---	16.0	12.0	---	17.0	---	---	---
10	---	12.0	---	---	13.0	15.0	14.0	---	---	---	---	19.0
11	16.5	---	8.0	---	12.0	12.0	15.0	---	---	---	---	---
12	---	---	---	---	---	---	17.0	17.0	---	---	---	---
13	18.0	---	---	---	14.0	13.0	---	---	17.0	20.0	20.0	---
14	---	---	---	---	14.0	14.0	16.0	---	---	---	---	---
15	---	---	---	9.0	13.0	15.0	---	16.0	---	---	---	---
16	---	---	---	---	---	---	---	---	---	---	---	---
17	---	15.0	---	---	---	---	---	---	---	---	---	20.0
18	---	---	11.0	---	15.0	---	14.0	---	---	---	---	---
19	---	---	---	---	---	---	---	---	---	19.0	---	---
20	17.0	---	---	---	---	---	---	---	17.0	---	20.0	---
21	---	---	---	---	---	---	---	---	---	---	---	---
22	---	---	---	10.0	---	---	---	16.0	---	---	---	---
23	---	---	---	---	---	---	---	---	---	---	---	---
24	---	16.0	6.0	---	---	---	15.0	---	---	---	---	---
25	---	---	---	---	10.0	---	---	---	---	---	---	---
26	---	---	---	---	---	15.0	---	---	---	---	---	---
27	16.0	---	---	---	---	12.0	---	---	17.0	---	---	---
28	16.0	---	---	---	---	---	---	---	---	---	16.0	---
29	14.0	---	9.0	7.0	---	---	---	---	---	20.0	---	---
30	---	10.0	8.0	7.0	---	---	---	17.0	17.5	21.5	---	---
31	---	---	---	7.0	---	---	---	---	---	---	---	---
MONTH	---	---	---	---	---	---	---	---	---	---	---	---

PARTICLE-SIZE DISTRIBUTION OF SUSPENDED SEDIMENT, WATER YEAR OCTOBER 1974 TO SEPTEMBER 1975

DATE	TIME	TEMPERATURE (DEG C)	INSTANTANEOUS DISCHARGE (CFS)	SUSPENDED SEDIMENT (MG/L)	SUSPENDED SEDIMENT DISCHARGE (T/DAY)	SUS. SED. SIEVE DIAM. % FINER THAN .062 MM	SUS. SED. SIEVE DIAM. % FINER THAN .125 MM	SUS. SED. SIEVE DIAM. % FINER THAN .250 MM	SUS. SED. SIEVE DIAM. % FINER THAN .500 MM
JAN. 06...	1315	9.0	8.0	78	1.7	48	82	98	100
FEB. 03...	1200	9.0	10	164	4.4	100	--	--	--
MAR. 08...	1600	15.0	45	19	2.3	89	96	97	100
APR. 09...	1530	13.0	112	41	12	52	75	91	100

11042000 SAN LUIS REY RIVER AT OCEANSIDE, CALIF.--Continued

SUSPENDED-SEDIMENT DISCHARGE (TONS/DAY), WATER YEAR OCTOBER 1974 TO SEPTEMBER 1975

	OCTOBER			NOVEMBER			DECEMBER		
DAY	MEAN DISCHARGE (CFS)	MEAN CONCEN-TRATION (MG/L)	SEDIMENT DISCHARGE (TONS/DAY)	MEAN DISCHARGE (CFS)	MEAN CONCEN-TRATION (MG/L)	SEDIMENT DISCHARGE (TONS/DAY)	MEAN DISCHARGE (CFS)	MEAN CONCEN-TRATION (MG/L)	SEDIMENT DISCHARGE (TONS/DAY)
1	2.7	12	.09	3.5	10	.09	1.7	7	.03
2	1.8	10	.05	4.8	11	.14	1.6	7	.03
3	1.3	9	.03	5.1	12	.17	1.5	7	.03
4	1.2	9	.03	4.7	10	.13	6.1	16	.32
5	1.6	9	.04	3.7	9	.09	6.9	10	.19
6	4.1	10	.11	3.0	8	.06	3.5	5	.05
7	3.6	10	.10	3.6	9	.09	3.2	5	.04
8	3.1	9	.08	3.4	8	.07	3.2	5	.04
9	2.2	7	.04	3.6	8	.08	3.0	6	.05
10	1.9	6	.03	5.5	9	.13	3.1	6	.05
11	1.7	5	.02	4.1	9	.10	2.8	4	.03
12	1.8	5	.02	4.2	11	.12	2.7	5	.04
13	3.5	13	.12	5.0	11	.15	2.7	5	.04
14	3.2	13	.11	2.6	10	.07	3.1	6	.05
15	3.0	13	.11	2.0	10	.05	5.9	13	.21
16	1.9	10	.05	2.1	10	.06	6.2	13	.22
17	1.4	8	.03	2.1	10	.06	6.0	13	.21
18	1.3	7	.02	2.1	10	.06	6.3	13	.22
19	1.6	6	.03	2.1	9	.05	6.3	12	.20
20	3.6	10	.10	2.3	8	.05	5.2	8	.11
21	2.1	8	.05	2.4	8	.05	3.5	6	.06
22	1.8	8	.04	2.4	7	.05	3.6	6	.06
23	4.2	11	.12	2.0	5	.03	3.1	6	.05
24	5.0	13	.18	1.9	3	.02	2.6	5	.04
25	4.6	13	.16	1.9	4	.02	4.6	6	.07
26	4.6	13	.16	2.1	5	.03	7.7	10	.21
27	4.7	13	.17	2.9	6	.05	5.1	7	.10
28	5.5	14	.21	3.1	7	.06	5.0	6	.08
29	10	14	.38	2.2	7	.04	12	13	.42
30	7.1	14	.28	1.9	7	.04	8.7	8	.19
31	2.7	7	.05	---	---	---	6.2	5	.08
TOTAL	98.8	---	3.01	92.3	---	2.21	143.1	---	3.52

	JANUARY			FEBRUARY			MARCH		
DAY	MEAN DISCHARGE (CFS)	MEAN CONCEN-TRATION (MG/L)	SEDIMENT DISCHARGE (TONS/DAY)	MEAN DISCHARGE (CFS)	MEAN CONCEN-TRATION (MG/L)	SEDIMENT DISCHARGE (TONS/DAY)	MEAN DISCHARGE (CFS)	MEAN CONCEN-TRATION (MG/L)	SEDIMENT DISCHARGE (TONS/DAY)
1	4.2	4	.05	3.5	3	.03	12	10	.32
2	3.8	3	.03	6.0	4	.06	16	22	.95
3	5.2	4	.06	10	47	1.3	12	20	.65
4	5.1	4	.06	13	11	.39	9.3	10	.25
5	9.6	7	.18	14	5	.19	9.6	7	.18
6	8.2	7	.16	14	3	.11	16	8	.35
7	7.8	5	.11	14	3	.11	22	7	.42
8	8.4	4	.09	12	3	.10	37	15	1.6
9	6.3	3	.05	12	3	.10	77	11	2.3
10	6.2	4	.07	16	4	.17	64	13	2.2
11	7.2	5	.10	19	4	.21	90	30	7.3
12	8.8	12	.29	22	9	.53	85	23	5.3
13	6.0	9	.15	27	10	.73	100	6	1.6
14	5.8	9	.14	21	11	.62	76	5	1.0
15	4.6	9	.11	14	7	.26	51	5	.69
16	3.5	8	.08	17	10	.46	51	6	.83
17	3.4	7	.06	18	13	.63	47	5	.63
18	3.5	6	.06	14	11	.42	31	5	.42
19	5.2	8	.11	11	8	.24	26	5	.35
20	8.8	13	.31	10	7	.19	24	5	.32
21	7.8	13	.27	9.7	7	.18	22	5	.30
22	4.2	11	.12	9.0	8	.19	29	8	.63
23	3.6	9	.09	8.2	6	.13	34	8	.73
24	4.8	8	.10	15	10	.41	28	6	.45
25	6.0	8	.13	12	11	.36	24	6	.39
26	9.1	13	.32	9.3	7	.18	22	6	.36
27	7.7	11	.23	8.7	7	.16	19	4	.21
28	5.8	9	.14	8.4	7	.16	18	4	.19
29	3.7	6	.06	---	---	---	16	4	.17
30	3.5	4	.04	---	---	---	20	5	.27
31	4.2	3	.03	---	---	---	22	7	.42
TOTAL	182.0	---	3.80	367.8	---	8.62	1109.9	---	31.78

11042000 SAN LUIS REY RIVER AT OCEANSIDE, CALIF.--Continued

SUSPENDED-SEDIMENT DISCHARGE (TONS/DAY), WATER YEAR OCTOBER 1974 TO SEPTEMBER 1975

	APRIL			MAY			JUNE		
DAY	MEAN DISCHARGE (CFS)	MEAN CONCEN-TRATION (MG/L)	SEDIMENT DISCHARGE (TONS/DAY)	MEAN DISCHARGE (CFS)	MEAN CONCEN-TRATION (MG/L)	SEDIMENT DISCHARGE (TONS/DAY)	MEAN DISCHARGE (CFS)	MEAN CONCEN-TRATION (MG/L)	SEDIMENT DISCHARGE (TONS/DAY)
1	17	6	.28	23	9	.56	5.3	14	.20
2	12	4	.13	21	8	.45	5.2	16	.22
3	12	5	.16	19	8	.41	4.8	17	.22
4	13	5	.18	18	8	.39	4.8	18	.23
5	18	6	.29	18	7	.34	4.4	20	.24
6	25	9	.61	17	7	.32	4.2	21	.24
7	25	11	.74	16	7	.30	3.8	22	.23
8	34	24	1.9	16	6	.26	3.7	21	.21
9	104	27	7.9	16	6	.26	3.5	50	.47
10	132	16	5.7	16	9	.39	3.4	83	.76
11	123	11	3.7	16	13	.56	3.1	77	.64
12	95	11	2.8	14	12	.45	3.2	70	.60
13	75	10	2.0	12	10	.32	3.2	64	.55
14	59	7	1.1	10	9	.24	4.2	56	.64
15	43	7	.81	9.9	9	.24	5.1	50	.69
16	38	7	.72	10	9	.24	5.5	43	.64
17	41	9	1.0	10	9	.24	5.1	37	.51
18	40	12	1.3	9.9	9	.24	4.7	30	.38
19	44	13	1.5	9.7	8	.21	7.5	36	.73
20	44	13	1.5	10	8	.22	5.8	33	.52
21	36	11	1.1	10	8	.22	7.4	30	.60
22	30	10	.81	8.5	8	.18	9.4	31	.79
23	26	11	.77	8.4	8	.18	9.4	29	.74
24	24	11	.71	12	10	.32	5.9	25	.40
25	26	12	.84	14	17	.64	4.2	22	.25
26	33	14	1.2	12	17	.55	3.8	22	.23
27	28	12	.91	8.2	15	.33	3.7	22	.22
28	26	12	.84	7.1	13	.25	5.2	26	.37
29	25	10	.68	6.6	13	.23	6.6	32	.57
30	24	9	.58	5.9	13	.21	5.6	31	.47
31	---	---	---	5.6	14	.21	---	---	---
TOTAL	1272	---	42.76	389.8	---	9.96	151.7	---	13.56

	JULY			AUGUST			SEPTEMBER		
DAY	MEAN DISCHARGE (CFS)	MEAN CONCEN-TRATION (MG/L)	SEDIMENT DISCHARGE (TONS/DAY)	MEAN DISCHARGE (CFS)	MEAN CONCEN-TRATION (MG/L)	SEDIMENT DISCHARGE (TONS/DAY)	MEAN DISCHARGE (CFS)	MEAN CONCEN-TRATION (MG/L)	SEDIMENT DISCHARGE (TONS/DAY)
1	4.2	28	.32	1.7	34	.16	2.7	9	.07
2	3.7	26	.26	1.8	25	.12	2.8	9	.07
3	3.5	23	.22	2.0	23	.12	2.6	9	.06
4	3.5	21	.20	2.1	21	.12	2.6	53	.37
5	3.5	20	.19	2.1	20	.11	2.6	9	.06
6	3.5	20	.19	2.1	20	.11	2.7	10	.07
7	3.5	21	.20	2.2	20	.12	2.6	10	.07
8	3.5	21	.20	2.4	20	.13	2.6	11	.08
9	3.4	21	.19	2.4	20	.13	2.7	12	.09
10	3.1	21	.18	2.4	20	.13	2.8	13	.10
11	3.0	22	.18	2.5	20	.14	2.9	12	.09
12	3.0	22	.18	4.6	25	.31	3.0	12	.10
13	3.0	22	.18	4.1	26	.29	3.0	12	.10
14	3.0	22	.18	2.5	21	.14	3.0	12	.10
15	3.0	22	.18	2.2	20	.12	3.0	11	.09
16	3.0	22	.18	2.6	20	.14	2.9	11	.09
17	2.8	21	.16	3.0	20	.16	2.9	11	.09
18	2.6	21	.15	2.8	18	.14	2.8	11	.08
19	2.6	20	.14	2.8	16	.12	2.7	10	.07
20	2.4	19	.12	2.9	14	.11	2.7	10	.07
21	2.3	19	.12	3.0	13	.11	2.8	10	.08
22	2.3	19	.12	3.2	13	.11	2.8	10	.08
23	2.3	20	.12	3.2	13	.11	2.8	10	.08
24	2.3	20	.12	3.1	13	.11	2.4	9	.06
25	2.3	20	.12	3.0	12	.10	2.1	9	.05
26	2.2	21	.12	3.0	11	.09	1.8	8	.04
27	2.0	25	.14	3.0	10	.08	1.8	8	.04
28	1.8	36	.18	2.8	10	.08	2.0	8	.04
29	1.7	42	.19	2.5	10	.07	2.1	9	.05
30	1.7	70	.32	2.6	9	.06	2.2	9	.05
31	1.7	51	.23	2.7	9	.07	---	---	---
TOTAL	86.4	---	5.58	83.3	---	3.91	78.4	---	2.49
YEAR	4055.5		131.20						

11042400 TEMECULA CREEK NEAR AGUANGA, CALIF.

LOCATION.--Lat 33°27'33", long 116°55'22", in NE¼SW¼SW¼ sec.19, T.8 S., R.1 E., Riverside County, on right bank 1.6 mi (2.6 km) downstream from Long Canyon, and 3.5 mi (5.6 km) northwest of Aguanga.

DRAINAGE AREA.--131 mi^2 (339 km^2).

PERIOD OF RECORD.--August 1957 to current year.

GAGE.--Water-stage recorder. Altitude of gage is 1,590 ft (485 m), from topographic map.

AVERAGE DISCHARGE.--18 years, 4.22 ft^3/s (0.120 m^3/s), 3,050 acre-ft/yr (3.76 hm^3/yr).

EXTREMES.--Current year: Maximum discharge, 95 ft^3/s (2.69 m^3/s) Mar. 8 (gage height, 2.52 ft or 0.768 m); no flow many days.
Period of record: Maximum discharge, 3,540 ft^3/s (100 m^3/s) Apr. 3, 1958 (gage height, 6.57 ft or 2.003 m), from rating curve extended above 1,200 ft^3/s (34 m^3/s); no flow at times in each year.

REMARKS.--Records good to 50 ft^3/s (1.4 m^3/s) and fair above. No regulation above station. Pumping for irrigation above station.

DISCHARGE, IN CUBIC FEET PER SECOND, WATER YEAR OCTOBER 1974 TO SEPTEMBER 1975
MEAN VALUES

DAY	OCT	NOV	DEC	JAN	FEB	MAR	APR	MAY	JUN	JUL	AUG	SEP
1	.21	.95	.42	1.1	1.1	.85	2.5	2.6	.42	.09		
2	.22	.92	.49	1.1	1.1	.77	2.6	2.5	.39	.08		
3	.26	.85	.54	1.1	1.5	.85	2.3	2.1	.37	.09		
4	.40	.82	1.6	1.1	2.1	.95	2.2	2.0	.42	.09		
5	.45	.77	.99	1.1	1.8	.95	2.3	2.0	.42	.02		
6	.35	.73	.82	1.1	1.6	4.5	4.4	2.0	.37	0		
7	.49	.66	.74	1.1	1.5	8.4	4.6	1.8	.33	0		
8	.62	.59	.76	1.1	1.3	22	4.9	1.7	.32	.05		
9	.60	.52	1.0	1.1	1.4	23	22	1.6	.29	.05		
10	.35	.39	.92	1.1	1.5	10	18	1.6	.27	.02		
11	.25	.37	.84	1.1	1.6	14	13	1.4	.23	0		
12	.28	.33	.77	1.1	1.5	9.4	9.4	1.3	.16	0		
13	.29	.32	.69	1.1	1.4	6.9	7.5	1.2	.14	0		
14	.33	.32	.28	1.1	1.4	8.7	6.3	1.2	.13	0		
15	.30	.34	.25	1.1	1.2	7.5	5.9	1.1	.12	0		
16	.25	.39	.25	1.1	1.1	5.7	5.4	1.2	.18	0		
17	.20	.45	.30	1.1	1.1	5.2	6.7	1.3	.23	0		
18	.18	.45	.33	1.1	1.1	4.4	7.5	1.4	.30	0		
19	.15	.47	.35	1.0	1.1	3.8	6.1	1.7	.33	0		
20	.13	.47	.38	1.0	1.1	3.3	5.6	2.1	.42	0		
21	.37	.52	.41	1.0	1.1	3.0	5.2	1.7	.38	0		
22	.51	.54	.53	.95	1.1	2.8	4.9	1.6	.26	0		
23	.54	.54	.54	1.0	.95	3.4	4.7	1.3	.21	0		
24	.49	.39	.54	1.0	.95	2.8	4.2	1.2	.20	0		
25	.45	.44	.54	.99	.95	2.6	4.1	.91	.18	0		
26	.47	.47	.54	.97	.89	3.1	4.1	.83	.16	0		
27	.59	.47	.61	1.0	.85	2.8	3.6	.80	.15	0		
28	1.2	.47	.87	1.1	.85	2.6	3.5	.74	.13	0		
29	1.4	.54	1.5	1.1	---	2.5	3.3	.67	.11	0		
30	1.2	.44	1.5	1.1	---	2.3	2.9	.61	.10	0		
31	1.0	---	1.2	1.1	---	2.3	---	.48	---	0		---
TOTAL	14.53	15.93	21.50	33.11	35.14	171.37	179.7	44.64	7.72	.49	0	0
MEAN	.47	.53	.69	1.07	1.26	5.53	5.99	1.44	.26	.016	0	0
MAX	1.4	.95	1.6	1.1	2.1	23	22	2.6	.42	.09	0	0
MIN	.13	.32	.25	.95	.85	.77	2.2	.48	.10	0	0	0
AC-FT	29	32	43	66	70	340	356	89	15	1.0	0	0

CAL YR 1974 TOTAL 665.68 MEAN 1.82 MAX 100 MIN 0 AC-FT 1320
WTR YR 1975 TOTAL 524.13 MEAN 1.44 MAX 23 MIN 0 AC-FT 1040

Peak discharge (base, 50 ft^3/s).--Mar. 8 (1745) 95 ft^3/s (2.52 ft).

11042500 TEMECULA CREEK AT VAIL DAM, CALIF.

LOCATION.--Lat 33°29'44", long 116°58'33", in Pauba Grant, Riverside County, at Vail Dam 0.2 mi (0.3 km) downstream from Arroyo Seco, and 10 mi (16 km) east of Temecula.

DRAINAGE AREA. 320 mi^2 (829 km^2).

PERIOD OF RECORD.--October 1948 to current year. January 1923 to October 1930 at site 200 ft (61 m) downstream and October 1930 to September 1948 at site 500 ft (152 m) downstream published as "at Nigger Canyon, near Temecula"; records not equivalent owing to change in natural water loss resulting from creation of Vail Lake. October 1948 to September 1951 published as "at Nigger Canyon, near Temecula"; records are for draft and spill only from Vail Lake. October 1951 to September 1955, published as "at Vail Dam, near Temecula."

GAGE.--Water stage recorder with rain-gage attachment. National Weather Service type nonrecording rain gage 0.2 mi (0.3 km) upstream. Datum of gage is 1,350.0 ft (411.48 m) above mean sea level (levels by Bureau of Reclamation); gage readings have been reduced to elevations above mean sea level. Water-stage recorder at site 500 ft (152 m) downstream measures release and spill.

AVERAGE DISCHARGE.--25 years (1923-48), 14.5 ft^3/s (0.411 m^3/s), 10,500 acre-ft/yr (12.9 hm^3/yr), see PERIOD OF RECORD; 27 years (1948-75), 5.36 ft^3/s (0.152 m^3/s), 3,880 acre-ft/yr (4.78 hm^3/yr).

REMARKS. Records poor. Discharges represent all water reaching Vail Lake, including precipitation on lake surface. Discharge computed on basis of records of storage, release (draft), spill, and evaporation. Monthly evaporation from lake surface computed on basis of evaporation from a class A evaporation pan using coefficient of 0.77, excepting the period June 1964 to September 1965, when a 24-inch (0.61-m) diameter sunken screen pan with a coefficient of 0.98 was used. Area-capacity tables for lake are based on a survey made in 1947. Vail Dam completed in June 1949. Capacity of lake at spillway level, 49,370 acre-ft (60.9 hm^3), elevation, 1,470.00 ft (448.056 m). Dead storage, 2.4 acre-ft (2,960 m^3) below lowest outlet at elevation 1,352.5 ft (412.24 m) included in these records. There has been no spill since Nov. 13, 1948, date of closure. Water is released as required down Temecula Creek for diversion about 1 mi (1.6 km) below dam. Monthly precipitation, in inches, from National Weather Service type nonrecording rain gage is as follows: October, 0.87 (2.21 cm); December, 1.62 (4.11 cm); January, 0.13 (0.33 cm); February, 0.77 (1.96 cm); March, 2.50 (6.35 cm); April, 2.01 (5.11 cm); June, 0.01 (0.025 cm); the current year, 7.90 (20.07 cm).

MONTHLY DISCHARGE, WATER YEAR OCTOBER 1974 TO SEPTEMBER 1975

Date	Elevation at 2400 (feet)	Contents (acre-feet)	Change in contents (acre-feet)	Draft (acre-feet)b	Evaporation (acre-feet)	Discharge (acre-feet)
		Vail Lake				
Sept. 30	1,436.65	20,500	--	--	--	--
Oct. 31	1,436.36	20,310	-190	39	213	62
Nov. 30	1,436.27	20,250	-60	1	185	126
Dec. 31	1,436.41	20,340	+90	0	137	227
CAL YR 1974	--	--	-1,810	609	3,541	2,340
Jan. 31	1,436.38	20,320	-20	0	133	113
Feb. 28	1,436.42	20,350	+30	1	140	171
Mar. 31	1,436.65	20,500	+150	0	168	318
Apr. 30	1,436.88	20,650	+150	18	185	353
May 31	a1,436.57	20,450	-200	14	319	133
June 30	a1,436.03	20,090	-360	32	364	36
July 31	a1,435.28	19,600	-490	100	455	65
Aug. 31	a1,434.58	19,160	-440	71	460	91
Sept. 30	a1,434.04	18,820	-340	93	375	128
WTR YR 1975	--	--	-1,680	369	3,134	1,823

a Estimated.
b Draft, in acre-feet, was all direct pumping from lake. Records of pumping furnished by Rancho California.
NOTE.--For months when inflow to the lake was small and other quantities were large, discordant figures of discharge may appear. This arises primarily from the difficulty of computing discharge as a residual of several larger quantities, which are not susceptible to measurement with a precision necessary to produce a final answer within desirable limits of accuracy.

11043000 MURRIETA CREEK AT TEMECULA, CALIF.

LOCATION.--Lat 33°28'47", long 117°08'35", in Temecula Grant, Riverside County, on right bank 0.4 mi (0.6 km) upstream from mouth, and 1.0 mi (1.6 km) south of Temecula.

DRAINAGE AREA.--222 mi^2 (575 km^2)

PERIOD OF RECORD.--October 1924 to current year. Monthly discharge only October 1924 to September 1930, published in WSP 1315-B.

GAGE.--Water-stage recorder. Concrete low-water control destroyed June 25, 1971. Altitude of gage is 970 ft (296 m), from topographic map. See WSP 1735 for history of changes prior to Dec. 16, 1938.

AVERAGE DISCHARGE.--51 years, 8.56 ft^3/s (0.242 m^3/s), 6,200 acre-ft/yr (7.64 hm^3/yr).

EXTREMES.--Current year: Maximum discharge, 88 ft^3/s (2.49 m^3/s) Apr. 9 (gage height, 2.52 ft or 0.768 m); maximum gage height, 2.69 ft (0.819 m) Mar. 8 (shift in rating); minimum daily, 0.20 ft^3/s (0.006 m^3/s) Nov. 1-4.

Period of record: Maximum discharge, 17,500 ft^3/s (496 m^3/s) Jan. 23, 1943 (gage height, 13.82 ft or 4.212 m); minimum daily, 0.02 ft^3/s (0.001 m^3/s) at times in 1969.

REMARKS.--Records good except those above 10 ft^3/s (0.28 m^3/s), which are poor. No regulation above station. Pumping above station for irrigation of about 2,500 acres (10.1 km^2).

DISCHARGE, IN CUBIC FEET PER SECOND, WATER YEAR OCTOBER 1974 TO SEPTEMBER 1975
MEAN VALUES

DAY	OCT	NOV	DEC	JAN	FEB	MAR	APR	MAY	JUN	JUL	AUG	SEP
1	.28	.20	.24	.44	.44	.28	.51	.51	.51	.33	.28	.33
2	.28	.20	.24	.38	.38	.33	.44	.51	.51	.33	.28	.28
3	.28	.20	.28	.38	3.9	.33	.44	.51	.51	.38	.24	.28
4	.28	.20	31	.38	2.0	.38	.44	.51	.51	.33	.24	.28
5	.28	.24	6.8	.38	.95	.67	.51	.51	.51	.33	.24	.28
6	.28	.24	1.3	.38	.59	24	.75	.51	.44	.33	.24	.28
7	.28	.24	.85	.38	.38	6.3	.51	.51	.44	.33	.24	.28
8	.28	.24	.75	.38	.33	25	15	.44	.38	.33	.24	.28
9	.28	.24	.67	.38	1.7	14	45	.44	.38	.33	.33	.28
10	.28	.24	.59	.38	1.7	19	7.8	.44	.38	.33	.33	.28
11	.28	.24	.59	.38	.59	17	3.7	.44	.38	.33	.28	.28
12	.24	.24	.51	.38	.38	5.8	2.4	.44	.38	.33	.28	.33
13	.24	.24	.44	.38	.38	3.5	2.0	.51	.38	.33	.28	.33
14	.24	.24	.44	.38	.38	11	1.8	.51	.38	.33	.28	.33
15	.24	.24	.38	.38	.33	.95	1.6	.51	.38	.33	.33	.33
16	.24	.24	.33	.38	.33	.75	1.6	.51	.38	.33	.33	.33
17	.24	.24	.33	.38	.28	.51	1.8	.51	.38	.33	.33	.33
18	.24	.24	.38	.38	.28	.44	1.3	.51	.38	.33	.38	.33
19	.24	.24	.38	.38	.28	.44	1.1	.59	.38	.33	.38	.33
20	.24	.24	.33	.38	.28	.44	1.1	.75	.38	.33	.38	.33
21	.24	.24	.28	.38	.28	.44	1.1	.59	.38	.28	.38	.38
22	.24	.24	.28	.38	.24	.59	.95	.51	.38	.28	.38	.38
23	.24	.24	.28	.38	.24	.44	.85	.51	.38	.28	.38	.38
24	.33	.24	.28	.38	.28	.44	.75	.51	.38	.28	.38	.38
25	.24	.24	.33	.38	.28	.51	.75	.44	.38	.28	.38	.38
26	.24	.24	.33	.38	.28	.44	.67	.44	.38	.28	.38	.33
27	.24	.24	.33	.44	.28	.44	.59	.51	.38	.28	.38	.33
28	.33	.24	.98	.44	.28	.44	.59	.51	.38	.28	.38	.38
29	.28	.24	3.5	.38	---	.44	.51	.51	.38	.28	.33	.38
30	.24	.24	.59	.44	---	.44	.51	.51	.38	.28	.33	.38
31	.24	---	.44	.44	---	.51	---	.51	---	.28	.33	---
TOTAL	8.10	7.04	54.45	12.08	18.04	136.25	97.07	15.72	12.17	9.73	9.94	9.80
MEAN	.26	.23	1.76	.39	.64	4.40	3.24	.51	.41	.31	.32	.33
MAX	.33	.24	31	.44	3.9	25	45	.75	.51	.38	.38	.38
MIN	.24	.20	.24	.38	.24	.28	.44	.44	.38	.28	.24	.28
AC-FT	16	14	108	24	36	270	193	31	24	19	20	19

CAL YR 1974 TOTAL 1167.96 MEAN 3.20 MAX 568 MIN .17 AC-FT 2320
WTR YR 1975 TOTAL 390.39 MEAN 1.07 MAX 45 MIN .20 AC-FT 774

Peak discharge (base, 55 ft^3/s)

Date	Time	G.H.	Discharge	Date	Time	G.H.	Discharge
12-4	1100	2.01	75	3-10	1900	2.15	77
3-6	0800	2.39	82	4-9	0400	2.52	88
3 8	1900	2.69	82				

11044000 SANTA MARGARITA RIVER NEAR TEMECULA, CALIF.

LOCATION. --Lat 33°28'26", long 117°08'29", in Temecula Grant, Riverside County, on left bank at upper end of Temecula Canyon, 0.1 mi (0.2 km) downstream from Murrieta Creek, and 1.4 mi (2.3 km) south of Temecula.

DRAINAGE AREA. 588 mi^2 (1,520 km^2).

PERIOD OF RECORD.--January 1923 to current year. Prior to October 1952, published as Temecula Creek at Railroad Canyon, near Temecula.

GAGE. Water-stage recorder and crest-stage gage. Altitude of gage is 950 ft (290 m), from topographic map. Prior to Nov. 3, 1966, at site 100 ft (30.5 m) downstream at same datum.

AVERAGE DISCHARGE.--25 years (1923-48), 28.2 ft^3/s (0.799 m^3/s), 20,420 acre-ft/yr (25.2 hm^3/yr); 27 years (1948-75), 9.79 ft^3/s (0.277 m^3/s), 7,090 acre-ft/yr (8.74 hm^3/yr).

EXTREMES. Current year: Maximum discharge, 107 ft^3/s (3.03 m^3/s) Dec. 4 (gage height, 2.74 ft or 0.835 m); minimum daily, 1.4 ft^3/s (0.040 m^3/s) several days during July to September.
Period of record: Maximum discharge, 25,000 ft^3/s (708 m^3/s) Feb. 16, 1927 (gage height, 14.6 ft or 4.45 m, at site 100 ft or 30.5 m downstream), from rating curve extended above 10,000 ft^3/s (283 m^3/s); minimum daily, 0.30 ft^3/s (0.009 m^3/s) Aug. 18-22, 1965, regulation by construction work above station.

REMARKS.--Records good. Flow partly regulated since November 1948 by Vail Lake (see sta 11042500). Pumping above station for irrigation.

DISCHARGE, IN CUBIC FEET PER SECOND, WATER YEAR OCTOBER 1974 TO SEPTEMBER 1975
MEAN VALUES

DAY	OCT	NOV	DEC	JAN	FEB	MAR	APR	MAY	JUN	JUL	AUG	SEP
1	2.0	2.0	2.2	2.8	2.6	3.0	3.7	2.6	2.3	1.9	1.6	1.7
2	2.0	2.2	2.3	2.9	2.5	3.0	3.3	2.5	2.3	1.7	1.6	1.6
3	2.0	2.1	2.3	2.7	8.0	3.1	3.0	2.5	2.1	1.8	1.4	1.6
4	2.0	2.1	47	2.5	5.8	3.1	2.8	2.6	2.1	1.8	1.4	1.5
5	2.1	2.1	11	2.6	4.0	3.4	2.9	2.6	2.1	1.7	1.4	1.5
6	2.1	2.1	3.3	2.6	3.3	30	4.4	2.6	2.1	1.6	1.4	1.4
7	2.1	2.0	2.1	2.8	3.0	8.3	3.0	2.8	2.0	1.5	1.4	1.5
8	2.0	2.1	1.9	2.9	2.8	31	19	2.8	2.0	1.7	1.4	1.6
9	1.8	2.1	1.8	2.9	5.1	17	52	2.8	2.0	1.6	1.5	1.7
10	1.8	2.1	2.2	2.8	5.4	22	11	2.8	2.0	1.5	1.5	1.6
11	1.8	2.1	1.8	2.8	3.9	21	6.3	2.5	2.0	1.5	1.5	1.7
12	1.8	2.1	2.0	2.6	3.1	8.8	5.2	2.5	2.0	1.6	1.5	1.8
13	1.8	2.1	1.8	2.3	3.0	6.1	4.5	2.5	2.0	1.7	1.5	1.8
14	1.8	2.1	1.8	2.9	3.0	15	5.2	2.6	2.0	1.7	1.5	1.8
15	1.8	2.1	1.8	2.6	3.0	7.1	4.2	2.6	2.1	1.7	1.5	1.6
16	1.7	2.1	2.2	2.6	3.0	4.8	3.8	2.8	2.1	1.6	1.5	1.6
17	1.8	2.3	2.0	2.6	2.8	4.3	6.0	2.8	2.3	1.6	1.4	1.6
18	1.7	2.3	2.3	2.6	2.8	4.1	4.7	2.8	2.6	1.5	1.5	1.6
19	1.7	2.3	2.6	2.6	2.8	5.4	4.1	2.8	2.5	1.6	1.5	1.6
20	1.8	2.3	2.2	2.6	2.8	7.0	4.2	3.8	2.3	1.6	1.6	1.6
21	1.8	2.3	2.1	2.6	2.8	4.7	4.7	3.0	2.2	1.6	1.6	1.6
22	1.8	2.5	2.4	2.6	2.6	5.7	3.7	2.8	2.3	1.5	1.6	1.6
23	1.8	2.5	2.3	2.5	2.8	4.9	3.7	2.8	2.3	1.5	1.6	1.6
24	2.2	2.5	2.0	2.5	2.8	4.7	3.5	2.6	2.3	1.5	1.6	1.5
25	2.0	2.6	2.1	2.5	2.8	4.3	3.4	2.3	2.1	1.4	1.5	1.4
26	2.0	2.6	2.1	2.5	3.0	4.3	3.2	2.1	2.2	1.4	1.6	1.4
27	2.1	2.6	2.1	2.6	3.0	3.9	3.1	2.1	2.0	1.5	1.6	1.5
28	3.6	2.6	4.4	2.6	3.0	3.5	3.0	2.1	2.1	1.4	1.6	1.5
29	2.8	2.6	9.5	2.7	---	3.3	2.8	2.1	2.1	1.5	1.5	1.8
30	2.2	1.9	3.2	2.9	---	3.1	2.7	2.0	2.0	1.5	1.6	1.8
31	2.0	---	3.1	2.8	---	3.1	---	2.1	---	1.4	1.5	---
TOTAL	61.9	67.4	131.9	82.5	95.5	253.0	187.1	80.3	64.5	49.1	46.9	48.1
MEAN	2.00	2.25	4.25	2.66	3.41	8.16	6.24	2.59	2.15	1.58	1.51	1.60
MAX	3.6	2.6	47	2.9	8.0	31	52	3.8	2.6	1.9	1.6	1.8
MIN	1.7	1.9	1.8	2.3	2.5	3.0	2.7	2.0	2.0	1.4	1.4	1.4
AC-FT	123	134	262	164	189	502	371	159	128	97	93	95

CAL YR 1974 TOTAL 2150.4 MEAN 5.89 MAX 615 MIN 1.6 AC-FT 4270
WTR YR 1975 TOTAL 1168.2 MEAN 3.20 MAX 52 MIN 1.4 AC-FT 2320

11044500 SANTA MARGARITA RIVER NEAR FALLBROOK, CALIF.

LOCATION.--Lat 33°23'54", long 117°15'44", in NE¼SE¼NE¼ sec.14, T.9 S., R.4 W., San Diego County, on right bank 180 ft (55 m) upstream from De Luz Road, 1.3 mi (2.1 km) northwest of Fallbrook, and 1.9 mi (3.1 km) downstream from Sandia Canyon.

DRAINAGE AREA.--644 mi^2 (1,668 km^2).

PERIOD OF RECORD.--October 1924 to current year. Monthly discharge only for October and November 1924, published in WSP 1315-B.

GAGE.--Water-stage recorder. Concrete-road control since October 1955. Datum of gage is 267.96 ft (81.674 m) above mean sea level (levels by Bureau of Reclamation). Prior to Oct. 1, 1955, at site 1.7 mi (2.7 km) upstream at different datum. Records equivalent except those for extreme low flows.

AVERAGE DISCHARGE.--24 years (1924-48), 35.4 ft^3/s (1.0 m^3/s), 25,630 acre-ft/yr (31.6 hm^3/yr); 27 years (1948-75), 12.0 ft^3/s (0.340 m^3/s), 8,690 acre-ft/yr (10.7 hm^3/yr).

EXTREMES.--Current year: Maximum discharge, 188 ft^3/s (5.32 m^3/s) Mar. 8 (gage height, 5.63 ft or 1.716 m); no flow Aug. 7 to Sept. 15, Sept. 18 to Sept. 30.
Period of record: Maximum discharge, 33,100 ft^3/s (937 m^3/s) Feb. 16, 1927 (gage height, 15.6 ft or 4.75 m, site and datum then in use), from rating curve extended above 8,800 ft^3/s (249 m^3/s) on basis of slope-area measurement of maximum flow; no flow at times in recent years.

REMARKS.--Records good. Flow partly regulated since November 1948 by Vail Lake (see sta 11042500). Several small diversions above station for irrigation. The Fallbrook Public Utility District reports no water pumped during the current year from a well in the streambed 2.1 mi (3.4 km) upstream from the station.

REVISIONS (WATER YEARS).--WRD Calif. 1972: 1971.

DISCHARGE, IN CUBIC FEET PER SECOND, WATER YEAR OCTOBER 1974 TO SEPTEMBER 1975
MEAN VALUES

DAY	OCT	NOV	DEC	JAN	FEB	MAR	APR	MAY	JUN	JUL	AUG	SEP
1	.72	2.4	2.7	4.5	4.1	4.2	6.5	4.6	2.3	1.1	.19	0
2	.79	2.7	2.5	4.2	4.0	4.2	6.0	4.5	2.3	.88	.15	0
3	.85	2.6	2.8	4.0	8.0	4.3	5.1	4.5	2.5	.82	.10	0
4	.92	2.3	34	3.8	13	4.6	5.0	4.6	2.4	.96	.08	0
5	1.0	2.0	35	3.8	9.6	4.5	5.1	4.5	2.5	1.0	.04	0
6	1.1	1.9	10	3.8	7.1	29	6.2	4.5	2.4	.88	.01	0
7	1.2	1.8	5.9	3.8	6.2	28	6.5	4.3	2.4	.75	0	0
8	1.3	1.7	4.3	4.0	5.8	46	12	4.3	2.3	.71	0	0
9	1.3	1.7	3.7	4.1	6.7	43	93	4.2	2.1	.72	0	0
10	1.3	1.6	3.6	4.0	12	30	25	4.3	2.2	.66	0	0
11	1.3	1.6	3.7	3.8	8.1	46	13	4.4	2.5	.62	0	0
12	1.3	1.5	3.6	3.7	6.4	20	9.5	4.2	2.2	.58	0	0
13	1.1	1.5	3.6	3.5	5.9	12	8.5	3.9	1.9	.52	0	0
14	1.0	1.6	3.5	3.5	5.8	19	7.8	4.1	2.0	.48	0	0
15	.82	1.8	3.2	3.8	5.5	12	7.3	4.1	1.9	.44	0	0
16	.57	2.1	3.1	3.7	5.4	9.3	6.9	4.4	2.1	.40	0	.04
17	.42	2.3	3.4	3.8	5.1	8.0	8.4	4.5	2.6	.31	0	.01
18	.41	2.3	3.3	3.6	5.0	7.1	8.3	4.3	3.0	.40	0	0
19	.57	2.4	3.3	3.6	4.6	6.8	6.9	4.0	3.2	.45	0	0
20	.91	2.3	3.3	3.7	4.6	7.7	6.1	4.7	2.8	.40	0	0
21	1.2	2.3	3.3	3.7	4.6	7.6	5.9	5.4	2.3	.40	0	0
22	1.4	2.4	3.3	3.8	4.4	8.0	5.7	4.2	2.0	.40	0	0
23	1.4	2.4	3.3	3.7	4.2	8.1	5.3	3.8	2.0	.35	0	0
24	1.4	2.0	3.3	3.6	4.5	6.5	5.3	3.7	2.0	.35	0	0
25	1.4	1.9	3.1	3.7	4.3	6.4	5.4	3.1	1.9	.31	0	0
26	1.5	2.0	3.1	3.8	4.4	6.6	5.1	2.7	1.7	.26	0	0
27	1.8	2.2	3.2	3.8	4.4	5.8	4.7	2.8	1.6	.22	0	0
28	2.8	2.4	4.1	3.8	4.4	5.4	4.6	3.0	1.5	.19	0	0
29	4.2	2.5	12	3.8	---	5.1	4.6	2.7	1.5	.22	0	0
30	3.2	2.7	8.1	4.0	---	5.0	4.6	2.5	1.3	.22	0	0
31	2.5	---	4.8	4.2	---	5.1	---	2.3	---	.19	0	---
TOTAL	41.68	62.9	190.1	118.6	168.1	415.3	304.3	123.1	65.4	16.19	.57	.05
MEAN	1.34	2.10	6.13	3.83	6.00	13.4	10.1	3.97	2.18	.52	.018	.002
MAX	4.2	2.7	35	4.5	13	46	93	5.4	3.2	1.1	.19	.04
MIN	.41	1.5	2.5	3.5	4.0	4.2	4.6	2.3	1.3	.19	0	0
AC-FT	83	125	377	235	333	824	604	244	130	32	1.1	.10

CAL YR 1974 TOTAL 2702.30 MEAN 7.40 MAX 974 MIN 0 AC-FT 5360
WTR YR 1975 TOTAL 1506.29 MEAN 4.13 MAX 93 MIN 0 AC-FT 2990

11044500 SANTA MARGARITA RIVER NEAR FALLBROOK, CALIF.--Continued

PERIOD OF RECORD.--Chemical analyses: Water years 1967 to current year (partial-record station).

REMARKS. Chemical-quality records furnished by California Department of Water Resources.

WATER QUALITY DATA, WATER YEAR OCTOBER 1974 TO SEPTEMBER 1975

DATE	TIME	INSTANTANEOUS DISCHARGE (CFS)	DISSOLVED IRON (FE) (UG/L)	DISSOLVED CALCIUM (CA) (MG/L)	DISSOLVED MAGNESIUM (MG) (MG/L)	DISSOLVED SODIUM (NA) (MG/L)	DISSOLVED POTASSIUM (K) (MG/L)	BICARBONATE (HCO3) (MG/L)	CARBONATE (CO3) (MG/L)	ALKALINITY AS CACO3 (MG/L)	DISSOLVED SULFATE (SO4) (MG/L)
DEC.											
18...	1240	3.3	--	115	41	142	3.5	359	0	294	192
MAR.											
26...	1130	6.8	--	110	44	129	4.3	317	0	260	212
MAY											
20...	0800	4.5	20	--	--	--	--	--	--	--	--
JUNE											
25...	1140	2.0	--	114	43	131	2.7	367	0	301	183

DATE	DISSOLVED CHLORIDE (CL) (MG/L)	DISSOLVED FLUORIDE (F) (MG/L)	TOTAL NITRATE (N) (MG/L)	DISSOLVED SOLIDS (RESIDUE AT 180 C) (MG/L)	DISSOLVED SOLIDS (TONS PER AC-FT)	HARDNESS (CA,MG) (MG/L)	NONCARBONATE HARDNESS (MG/L)	PERCENT SODIUM	SODIUM ADSORPTION RATIO	SPECIFIC CONDUCTANCE (MICROMHOS)	PH (UNITS)
DEC.											
18...	191	.5	.00	930	1.26	459	170	40	2.9	1300	8.0
MAR.											
26...	180	.5	.09	882	1.20	457	200	38	2.6	1300	8.2
MAY											
20...	--	--	--	--	--	--	--	--	--	--	--
JUNE											
25...	182	.6	.14	903	1.23	462	160	38	2.7	1350	8.0

DATE	TEMPERATURE (DEG C)	TURBIDITY (JTU)	DISSOLVED OXYGEN (MG/L)	DISSOLVED ARSENIC (AS) (UG/L)	DISSOLVED BORON (B) (UG/L)	DISSOLVED CADMIUM (CD) (UG/L)	DISSOLVED COPPER (CU) (UG/L)	DISSOLVED LEAD (PB) (UG/L)	TOTAL MERCURY (HG) (UG/L)	DISSOLVED ZINC (ZN) (UG/L)
DEC.										
18...	9.5	4	11.1	--	160	--	--	--	--	--
MAR.										
26...	13.0	10	11.5	--	150	--	--	--	--	--
MAY										
20...	14.5	--	--	0	--	0	0	0	.0	0
JUNE										
25...	19.5	4	8.2	--	80	--	--	--	--	--

11046000 SANTA MARGARITA RIVER AT YSIDORA, CALIF.

LOCATION.--Lat 33°14'13", long 117°23'14", in NE¼SW¼NE¼ sec.10, T.11 S., R.5 W., San Diego County, on Camp Joseph H. Pendleton Naval Reservation, on left bank 1.7 mi (2.7 km) upstream from mouth, and 2.0 mi (3.2 km) southwest of Ysidora.

DRAINAGE AREA.--740 mi^2 (1,917 km^2).

PERIOD OF RECORD.--February 1923 to current year.

GAGE.--Water-stage recorder. Datum of gage is 5.00 ft (1.524 m) below mean sea level (U.S. Navy reference mark). See WSP 1735 for history of changes prior to Nov. 27, 1935. Nov. 27, 1935, to Feb. 25, 1970, at site 0.8 mi (1.3 km) upstream at different datum.

AVERAGE DISCHARGE.--52 years, 26.5 ft^3/s (0.750 m^3/s), 19,200 acre-ft/yr (23.7 hm^3/yr).

EXTREMES.--Current year: No flow during year.
Period of record: Maximum discharge, 33,600 ft^3/s (952 m^3/s) Feb. 16, 1927 (gage height, 18.00 ft or 5.486 m, site and datum then in use), on basis of slope-area measurement of maximum flow; no flow for all or parts of most years.

REMARKS.--No flow since Apr. 15, 1974. Flow partly regulated by Vail Lake since November 1948 (see sta 11042500). Diversions for irrigation on Rancho California (formerly Santa Margarita Ranch and Pauba Ranch). Conservation pools, 0.9 mi (1.4 km) upstream, detain low flow. AVERAGE DISCHARGE represents flow to ocean during period of record, regardless of upstream development.

PERIOD OF RECORD.--Continued
Water temperatures: October 1968 to September 1972.
Sediment records: October 1967 to current year.

EXTREMES.--Current year:
Sediment concentrations: No flow during year.
Sediment discharge: No flow during year.
Period of record:
Sediment concentrations: Maximum daily, 13,000 mg/l Feb. 24, 1969; minimum daily, no flow for many days each year.
Sediment discharge: Maximum daily, 534,000 tons (484,000 tonnes) Feb. 24, 1969; minimum daily, 0 tons (0 tonnes) on many days each year.

11046100 LAS FLORES CREEK NEAR OCEANSIDE, CALIF.

LOCATION.--Lat 33°17'32", long 117°27'21", in NW¼SE¼ sec.24, T.10 S., R.6 W., San Diego County, Camp Joseph H. Pendleton Naval Reservation, on upstream side and at center of bridge on Atchison, Topeka, and Santa Fe Railway, 0.5 mi (0.8 km) upstream from mouth, and 8.5 mi (13.7 km) northwest of Oceanside.

DRAINAGE AREA.--26.6 mi^2 (68.9 km^2).

PERIOD OF RECORD.--May 1951 to September 1967, October 1969 to current year.

GAGE.--Water-stage recorder and multiple concrete culvert control. Altitude of gage is 35 ft (11 m), from topographic map.

AVERAGE DISCHARGE.--22 years, 0.55 ft^3/s (0.0156 m^3/s), 398 acre-ft/yr (491,000 m^3/yr).

EXTREMES.--Current year: Maximum discharge, 5.0 ft^3/s (0.14 m^3/s) Apr. 8 (gage height, 0.61 ft or 0.186 m); no flow several days in September.

Period of record: Maximum discharge, 960 ft^3/s (27.2 m^3/s) Jan. 16, 1952 (gage height, 4.75 ft or 1.448 m), based on critical-depth determination of maximum flow; no flow for long periods in most years.

Flood of Feb. 25, 1969, reached a stage of 7.25 ft (2.210 m), from floodmarks (discharge, 4,200 ft^3/s or 119 m^3/s).

REMARKS.--Records good to 0.1 ft^3/s (0.003 m^3/s) and fair above. No regulation above station. Some pumping above station for irrigation.

REVISIONS (WATER YEARS).--WRD Calif. 1972 1971.

DISCHARGE, IN CUBIC FEET PER SECOND, WATER YEAR OCTOBER 1974 TO SEPTEMBER 1975
MEAN VALUES

DAY	OCT	NOV	DEC	JAN	FEB	MAR	APR	MAY	JUN	JUL	AUG	SEP
1	.02	.01	.02	.03	.01	.02	.03	.02	.01	.01	.01	.01
2	.02	.01	.02	.03	.01	.02	.02	.02	.01	.01	.01	.01
3	.02	.01	.02	.03	.06	.02	.03	.03	.01	.01	.01	.01
4	.01	.01	.22	.03	.03	.02	.02	.02	.01	.01	.01	.01
5	.01	.01	.09	.03	.03	.02	.03	.02	.01	.01	.01	.01
6	.01	.01	.06	.03	.02	.03	.03	.01	.01	.01	.01	.01
7	.01	.01	.05	.04	.02	.02	.02	.01	.01	.01	.01	.01
8	.01	.01	.04	.04	.02	.07	.90	.01	.01	.01	.01	0
9	.01	.01	.04	.03	.06	.03	.75	.01	.01	.01	.01	0
10	.01	.01	.04	.02	.03	.12	.04	.01	.01	.01	.01	.01
11	.01	.01	.04	.02	.02	.10	.04	.02	.01	.01	.01	0
12	.01	.01	.04	.02	.02	.03	.03	.02	.01	.01	.01	0
13	.01	.01	.04	.02	.02	.03	.03	.02	.01	.01	.01	.01
14	.01	.01	.04	.02	.03	.04	.03	.01	.01	.01	.01	.01
15	.01	.01	.04	.03	.03	.03	.03	.01	.01	.01	.01	.01
16	.01	.01	.04	.03	.03	.03	.03	.01	.01	.01	.01	.01
17	.01	.01	.04	.03	.03	.03	.04	.01	.01	.01	.01	0
18	.01	.01	.04	.03	.03	.03	.02	.01	.01	.01	.01	0
19	.01	.01	.03	.03	.03	.03	.02	.01	.01	.01	.01	0
20	.01	.02	.03	.03	.03	.03	.02	.01	.01	.01	.01	0
21	.01	.03	.03	.03	.03	.03	.02	.01	.01	.01	.01	.01
22	.01	.03	.04	.03	.02	.05	.02	.01	.01	.01	.01	.01
23	.01	.03	.04	.03	.03	.03	.02	.01	.01	.01	.01	.01
24	.01	.02	.04	.02	.03	.03	.02	.01	.01	.01	.01	0
25	.01	.02	.04	.02	.03	.03	.03	.01	.01	.01	.01	0
26	.01	.03	.04	.02	.02	.03	.02	.01	.01	.01	.01	0
27	.01	.03	.04	.02	.02	.03	.02	.01	.01	.01	.01	0
28	.01	.03	.08	.01	.02	.02	.02	.01	.01	.01	.01	0
29	.03	.03	.09	.01	---	.02	.02	.01	.01	.01	.01	0
30	.01	.02	.04	.04	---	.03	.02	.01	.01	.01	.01	.01
31	.01	---	.03	.03	---	.03	---	.01	---	.01	.01	---
TOTAL	.36	.48	1.49	.83	.76	1.08	2.37	.40	.30	.31	.31	.16
MEAN	.012	.016	.048	.027	.027	.035	.079	.013	.010	.010	.010	.005
MAX	.03	.03	.22	.04	.06	.12	.90	.03	.01	.01	.01	.01
MIN	.01	.01	.02	.01	.01	.02	.02	.01	.01	.01	.01	0
AC-FT	.7	1.0	3.0	1.6	1.5	2.1	4.7	.8	.6	.6	.6	.3

CAL YR 1974 TOTAL 10.39 MEAN .029 MAX 2.1 MIN 0 AC-FT 21
WTR YR 1975 TOTAL 8.85 MEAN .024 MAX .90 MIN 0 AC-FT 18

Peak discharge (base, 100 ft^3/s).--No peak above base.

11046550 SAN JUAN CREEK AT SAN JUAN CAPISTRANO, CALIF.

LOCATION.--Lat 33°29'30", long 117°39'44", in SW¼SE¼NE¼ sec.12, T.8 S., R.8 W., Orange County, on left bank at Camino Capistrano bridge, 0.2 mi (0.3 km) upstream from Arroyo Trabuco, and 0.6 mi (1.0 km) south of San Juan Capistrano.

DRAINAGE AREA.--117 mi^2 (303 km^2).

PERIOD OF RECORD.--October 1969 to current year.

GAGE.--Water-stage recorder. Altitude of gage is 59.21 ft (18.05 m) above mean sea level.

AVERAGE DISCHARGE.--6 years, 3.90 ft^3/s (0.110 m^3/s), 2,830 acre-ft/yr (3.5 hm^3/yr).

EXTREMES.--Current year: Maximum discharge, 146 ft^3/s (4.13 m^3/s) Mar. 10 (gage height, 3.08 ft or 0.939 m); minimum daily, 0.24 ft^3/s (0.007 m^3/s) Sept. 1, 3, 14.
Period of record: Maximum discharge, 445 ft^3/s (12.6 m^3/s) Feb. 11, 1973 (gage height, 4.35 ft or 1.326 m); no flow at times in most years.
Flood of Feb. 25, 1969, 22,400 ft^3/s (634 m^3/s), at site 2.8 mi (4.5 km) upstream, as station 11046500.

REMARKS.--Records poor. No regulation above station. Capistrano Water Co. diverted 3.0 mi (4.8 km) upstream. Various amounts of diverted water reaches station as irrigation return flow and rising ground water. Data for San Juan Creek near San Juan Capistrano (11046500) previously collected at site 2.8 mi (4.5 km) upstream was published as creek only and combined.

COOPERATION.--Eleven discharge measurements furnished by Orange County Flood Control District.

DISCHARGE, IN CUBIC FEET PER SECOND, WATER YEAR OCTOBER 1974 TO SEPTEMBER 1975
MEAN VALUES

DAY	OCT	NOV	DEC	JAN	FEB	MAR	APR	MAY	JUN	JUL	AUG	SEP
1	.66	.46	2.3	6.8	6.2	3.8	6.0	8.6	2.4	1.1	.51	.24
2	.64	.52	2.3	5.8	5.7	3.6	5.9	8.2	2.4	1.2	.46	.30
3	.60	.70	2.3	5.4	23	3.4	6.0	7.8	2.4	1.3	.41	.24
4	.58	.90	9.9	5.1	9.5	3.4	6.0	7.4	2.7	1.2	.38	.53
5	.54	1.3	7.3	4.8	8.7	6.8	6.1	7.1	3.2	1.1	.44	.72
6	.50	1.5	6.8	4.6	6.8	28	6.2	6.8	3.6	.95	.52	.82
7	.46	1.9	6.2	4.5	6.5	17	6.4	6.6	3.7	.85	.62	.72
8	.43	2.0	6.0	4.4	5.2	35	25	6.4	3.8	.74	.82	.44
9	.41	2.0	5.6	4.3	9.1	20	64	6.2	3.9	.67	.93	.62
10	.41	1.8	5.3	4.2	8.7	44	56	6.0	3.8	.68	.62	1.0
11	.41	1.6	5.1	4.1	6.2	56	26	5.8	3.6	1.3	.62	1.5
12	.42	1.4	4.9	4.0	5.8	48	12	5.4	3.1	1.3	.52	.52
13	.43	1.2	4.7	3.9	5.6	23	11	5.2	2.5	1.3	.52	.30
14	.44	1.1	4.6	3.8	5.5	21	11	5.1	2.0	1.4	.44	.24
15	.45	1.0	4.5	3.8	5.3	12	12	4.9	1.7	1.5	.44	.30
16	.46	1.1	4.4	3.7	5.2	11	13	4.7	1.6	1.5	.62	.62
17	.47	1.2	4.3	3.6	5.1	9.9	17	4.5	1.5	1.5	.62	.88
18	.49	1.4	4.2	3.6	5.1	9.4	19	4.3	1.5	1.5	.62	.93
19	.50	1.6	4.1	3.5	5.1	9.1	17	4.1	1.5	1.4	.93	.82
20	.51	1.8	4.0	3.4	5.0	8.8	16	3.9	1.4	.85	.93	.62
21	.52	2.0	4.0	3.4	4.8	8.6	15	3.8	1.4	.69	.93	.52
22	.52	2.1	3.9	3.4	4.6	8.4	14	3.6	1.2	.67	.82	.44
23	.52	2.2	3.9	3.5	4.3	8.2	12	3.5	1.2	.66	.72	.52
24	.51	2.2	3.9	3.5	3.9	8.1	11	3.4	1.1	.66	.93	.52
25	.49	2.3	3.8	3.4	3.4	8.0	13	3.3	1.1	.66	.93	.30
26	.48	2.3	3.8	3.4	3.4	7.7	12	3.1	1.1	.66	.82	.44
27	.47	2.3	3.8	3.4	4.1	7.4	11	3.0	1.1	.66	.52	.44
28	.46	2.3	7.1	3.2	4.1	7.0	10	2.9	1.0	.65	.93	.44
29	.45	2.3	12	3.0	---	6.6	9.6	2.8	.98	.63	1.0	.52
30	.45	2.3	9.5	5.0	---	6.4	9.1	2.7	1.0	.60	.93	.44
31	.45	---	7.9	6.2	---	6.1	---	2.6	---	.56	.72	---
TOTAL	15.13	48.78	162.4	128.7	175.9	455.7	458.3	153.7	63.48	30.44	21.22	16.94
MEAN	.49	1.63	5.24	4.15	6.28	14.7	15.3	4.96	2.12	.98	.68	.56
MAX	.66	2.3	12	6.8	23	56	64	8.6	3.9	1.5	1.0	1.5
MIN	.41	.46	2.3	3.0	3.4	3.4	5.9	2.6	.98	.56	.38	.24
AC-FT	30	97	322	255	349	904	909	305	126	60	42	34

CAL YR 1974 TOTAL 1253.51 MEAN 3.43 MAX 129 MIN .34 AC-FT 2490
WTR YR 1975 TOTAL 1730.69 MEAN 4.74 MAX 64 MIN .24 AC-FT 3430

PEAK DISCHARGE (BASE, 200 ft^3/s).--No peak above base.

11046550 SAN JUAN CREEK AT SAN JUAN CAPISTRANO, CALIF.--Continued

PERIOD OF RECORD.--Water temperatures: October 1970 to current year.
Sediment records: October 1970 to current year.

EXTREMES.--Current year:
Sediment concentrations: Maximum daily, 2,720 mg/l Mar. 6; minimum daily, 10 mg/l Feb. 24-27.
Sediment discharge: Maximum daily, 462 tons (419 tonnes) Mar. 10; minimum daily, 0.01 ton (0.01 tonne) Sept. 14.
Period of record:
Sediment concentrations: Maximum daily, 4,600 mg/l Feb. 28, 1973; minimum daily, no flow for many days in 1970-72.
Sediment discharge: Maximum daily, 1,990 tons (1,810 tonnes) Feb. 11, 1973; minimum daily, 0 tons (0 tonnes) on many days during most years.

TEMPERATURE (DEG. C) OF WATER, WATER YEAR OCTOBER 1974 TO SEPTEMBER 1975
ONCE-DAILY

DAY	OCT	NOV	DEC	JAN	FEB	MAR	APR	MAY	JUN	JUL	AUG	SEP
1	20.5	---	---	---	---	---	14.0	18.5	---	---	19.0	---
2	---	---	---	---	---	---	---	12.0	17.0	---	---	---
3	---	---	16.0	8.0	10.0	---	---	---	---	18.0	---	---
4	20.0	---	13.0	---	11.0	20.0	17.0	---	21.0	24.0	20.0	17.5
5	---	---	12.0	---	13.0	---	---	---	---	---	---	---
6	---	---	10.0	---	11.0	12.0	---	---	---	---	---	---
7	---	18.0	---	---	12.0	14.0	---	---	---	---	---	---
8	---	11.0	---	---	---	14.0	12.5	17.5	---	---	26.0	---
9	---	---	---	---	15.0	13.0	11.0	14.0	22.0	---	---	---
10	22.0	---	---	7.0	13.0	12.0	10.0	---	---	23.0	---	---
11	18.0	---	---	---	10.0	9.0	---	---	---	27.0	---	18.5
12	---	---	---	---	---	9.0	---	---	---	---	---	18.0
13	---	---	17.5	---	---	11.0	13.0	---	17.0	---	---	---
14	---	18.5	---	---	---	10.0	---	---	---	---	19.0	---
15	---	16.0	---	---	---	9.0	14.0	---	---	---	24.0	24.0
16	---	---	---	---	---	---	---	17.0	18.0	---	---	---
17	---	---	---	8.5	---	---	12.5	---	---	20.0	---	20.5
18	20.0	---	---	---	---	---	11.0	---	---	24.0	---	---
19	---	---	15.0	---	---	---	---	---	---	---	---	18.0
20	---	---	13.0	---	11.0	---	---	---	23.0	---	---	---
21	---	16.0	---	---	---	12.0	---	17.0	---	---	18.0	---
22	21.0	15.0	---	---	---	13.0	---	---	---	---	21.0	---
23	---	---	---	---	---	20.0	---	13.0	17.5	---	---	---
24	---	---	---	7.0	---	12.5	---	---	---	21.0	---	---
25	15.0	---	---	---	---	20.5	14.0	---	---	23.0	---	21.5
26	---	---	---	---	---	---	---	---	---	---	---	22.0
27	---	---	6.0	16.0	12.5	---	---	---	16.0	---	---	---
28	---	---	10.0	---	17.0	15.0	---	---	---	22.0	15.5	---
29	---	14.0	9.0	---	---	---	14.5	---	---	---	23.0	---
30	---	---	7.0	---	---	---	---	17.0	---	---	---	---
31	19.5	---	---	8.0	---	---	---	---	---	---	---	---
MONTH	---	---	---	---	---	---	---	---	---	---	---	---

11046550 SAN JUAN CREEK AT SAN JUAN CAPISTRANO, CALIF.--Continued

SUSPENDED-SEDIMENT DISCHARGE (TONS/DAY), WATER YEAR OCTOBER 1974 TO SEPTEMBER 1975

	OCTOBER			NOVEMBER			DECEMBER		
DAY	MEAN DISCHARGE (CFS)	MEAN CONCEN-TRATION (MG/L)	SEDIMENT DISCHARGE (TONS/DAY)	MEAN DISCHARGE (CFS)	MEAN CONCEN-TRATION (MG/L)	SEDIMENT DISCHARGE (TONS/DAY)	MEAN DISCHARGE (CFS)	MEAN CONCEN-TRATION (MG/L)	SEDIMENT DISCHARGE (TONS/DAY)
1	.66	90	.16	.46	45	.06	2.3	15	.09
2	.64	85	.15	.52	45	.06	2.3	15	.09
3	.60	80	.13	.70	40	.08	2.3	15	.09
4	.58	80	.13	.90	40	.10	9.9	2520	81
5	.54	75	.11	1.3	45	.16	7.3	150	3.0
6	.50	75	.10	1.5	50	.20	6.8	100	1.8
7	.46	70	.09	1.9	50	.26	6.2	80	1.3
8	.43	65	.08	2.0	45	.24	6.0	65	1.1
9	.41	60	.07	2.0	40	.22	5.6	55	.83
10	.41	60	.07	1.8	30	.15	5.3	50	.72
11	.41	50	.06	1.6	25	.11	5.1	45	.62
12	.42	45	.05	1.4	25	.09	4.9	40	.53
13	.43	40	.05	1.2	20	.06	4.7	35	.44
14	.44	35	.04	1.1	20	.06	4.6	35	.43
15	.45	30	.04	1.0	15	.04	4.5	30	.36
16	.46	30	.04	1.1	15	.04	4.4	30	.36
17	.47	20	.03	1.2	15	.05	4.3	25	.29
18	.49	20	.03	1.4	15	.06	4.2	25	.28
19	.50	20	.03	1.6	15	.06	4.1	20	.22
20	.51	20	.03	1.8	15	.07	4.0	20	.22
21	.52	25	.04	2.0	15	.08	4.0	20	.22
22	.52	25	.04	2.1	15	.09	3.9	20	.21
23	.52	40	.06	2.2	15	.09	3.9	20	.21
24	.51	60	.08	2.2	15	.09	3.9	15	.16
25	.49	90	.12	2.3	15	.09	3.8	15	.15
26	.48	80	.10	2.3	15	.09	3.8	15	.15
27	.47	75	.10	2.3	15	.09	3.8	70	.72
28	.46	70	.09	2.3	15	.09	7.1	255	6.4
29	.45	60	.07	2.3	15	.09	12	1220	66
30	.45	55	.07	2.3	15	.09	9.5	125	3.2
31	.45	50	.06	---	---	---	7.9	70	1.5
TOTAL	15.13	---	2.32	48.78	---	3.06	162.4	---	172.69

	JANUARY			FEBRUARY			MARCH		
DAY	MEAN DISCHARGE (CFS)	MEAN CONCEN-TRATION (MG/L)	SEDIMENT DISCHARGE (TONS/DAY)	MEAN DISCHARGE (CFS)	MEAN CONCEN-TRATION (MG/L)	SEDIMENT DISCHARGE (TONS/DAY)	MEAN DISCHARGE (CFS)	MEAN CONCEN-TRATION (MG/L)	SEDIMENT DISCHARGE (TONS/DAY)
1	6.8	60	1.1	6.2	30	.50	3.8	20	.21
2	5.8	50	.78	5.7	25	.38	3.6	20	.19
3	5.4	45	.66	23	1040	95	3.4	15	.14
4	5.1	40	.55	9.5	75	1.9	3.4	15	.14
5	4.8	35	.45	8.7	45	1.1	6.8	15	.28
6	4.6	35	.43	6.8	35	.64	28	2720	291
7	4.5	30	.36	6.5	30	.53	17	100	4.6
8	4.4	30	.36	5.2	25	.35	35	870	115
9	4.3	25	.29	9.1	20	.49	20	400	22
10	4.2	25	.28	8.7	1000	23	44	1910	462
11	4.1	25	.28	6.2	60	1.0	56	1080	178
12	4.0	20	.22	5.8	35	.55	48	500	65
13	3.9	20	.21	5.6	30	.45	23	250	13
14	3.8	20	.21	5.5	25	.37	21	520	29
15	3.8	20	.21	5.3	25	.36	12	80	2.6
16	3.7	15	.15	5.2	25	.35	11	70	2.1
17	3.6	15	.15	5.1	25	.34	9.9	60	1.6
18	3.6	15	.15	5.1	25	.34	9.4	50	1.3
19	3.5	15	.14	5.1	20	.28	9.1	40	.98
20	3.4	15	.14	5.0	20	.27	8.8	35	.83
21	3.4	15	.14	4.8	20	.26	8.6	60	1.4
22	3.4	15	.14	4.6	15	.19	8.4	55	1.2
23	3.5	20	.19	4.3	15	.17	8.2	50	1.1
24	3.5	35	.33	3.9	10	.11	8.1	50	1.1
25	3.4	30	.28	3.4	10	.09	8.0	45	.97
26	3.4	25	.23	3.4	10	.09	7.7	45	.94
27	3.4	25	.23	4.1	10	.11	7.4	40	.80
28	3.2	20	.17	4.1	25	.28	7.0	40	.76
29	3.0	20	.16	---	---	---	6.6	35	.62
30	5.0	85	1.7	---	---	---	6.4	35	.60
31	6.2	40	.67	---	---	---	6.1	35	.58
TOTAL	128.7	---	11.36	175.9	---	129.50	455.7	---	1200.04

11046550 SAN JUAN CREEK AT SAN JUAN CAPISTRANO, CALIF.--Continued

SUSPENDED-SEDIMENT DISCHARGE (TONS/DAY), WATER YEAR OCTOBER 1974 TO SEPTEMBER 1975

	APRIL			MAY			JUNE		
DAY	MEAN DISCHARGE (CFS)	MEAN CONCEN-TRATION (MG/L)	SEDIMENT DISCHARGE (TONS/DAY)	MEAN DISCHARGE (CFS)	MEAN CONCEN-TRATION (MG/L)	SEDIMENT DISCHARGE (TONS/DAY)	MEAN DISCHARGE (CFS)	MEAN CONCEN-TRATION (MG/L)	SEDIMENT DISCHARGE (TONS/DAY)
1	6.0	35	.57	8.6	15	.35	2.4	20	.13
2	5.9	30	.48	8.2	15	.33	2.4	20	.13
3	6.0	30	.49	7.8	20	.42	2.4	15	.10
4	6.0	30	.49	7.4	20	.40	2.7	20	.15
5	6.1	25	.41	7.1	20	.38	3.2	20	.17
6	6.2	25	.42	6.8	20	.37	3.6	20	.19
7	6.4	25	.43	6.6	20	.36	3.7	20	.20
8	25	320	61	6.4	25	.43	3.8	20	.21
9	64	1610	307	6.2	25	.42	3.9	25	.26
10	56	465	90	6.0	25	.41	3.8	40	.41
11	26	82	5.8	5.8	25	.39	3.6	60	.58
12	12	50	1.6	5.4	25	.36	3.1	60	.50
13	11	40	1.2	5.2	25	.35	2.5	55	.37
14	11	35	1.0	5.1	25	.34	2.0	50	.27
15	12	40	1.3	4.9	25	.33	1.7	45	.21
16	13	60	2.1	4.7	25	.32	1.6	40	.17
17	17	80	3.7	4.5	25	.30	1.5	35	.14
18	19	70	3.6	4.3	25	.29	1.5	25	.10
19	17	60	2.8	4.1	25	.28	1.5	25	.10
20	16	50	2.2	3.9	30	.32	1.4	25	.09
21	15	45	1.8	3.8	25	.26	1.4	20	.08
22	14	40	1.5	3.6	25	.24	1.2	20	.06
23	12	35	1.1	3.5	25	.24	1.2	20	.06
24	11	30	.89	3.4	25	.23	1.1	20	.06
25	13	35	1.2	3.3	25	.22	1.1	20	.06
26	12	30	.97	3.1	25	.21	1.1	15	.04
27	11	25	.74	3.0	25	.20	1.1	15	.04
28	10	20	.54	2.9	25	.20	1.0	15	.04
29	9.6	15	.39	2.8	20	.15	.98	15	.04
30	9.1	15	.37	2.7	20	.15	1.0	15	.04
31	---	---	---	2.6	20	.14	---	---	---
TOTAL	458.3	---	496.09	153.7	---	9.39	63.48	---	5.00

	JULY			AUGUST			SEPTEMBER		
DAY	MEAN DISCHARGE (CFS)	MEAN CONCEN-TRATION (MG/L)	SEDIMENT DISCHARGE (TONS/DAY)	MEAN DISCHARGE (CFS)	MEAN CONCEN-TRATION (MG/L)	SEDIMENT DISCHARGE (TONS/DAY)	MEAN DISCHARGE (CFS)	MEAN CONCEN-TRATION (MG/L)	SEDIMENT DISCHARGE (TONS/DAY)
1	1.1	25	.07	.51	55	.08	.24	50	.03
2	1.2	50	.16	.46	40	.05	.30	50	.04
3	1.3	95	.33	.41	25	.03	.24	55	.04
4	1.2	35	.11	.38	20	.02	.53	100	.14
5	1.1	30	.09	.44	15	.02	.72	130	.25
6	.95	25	.06	.52	20	.03	.82	130	.29
7	.85	20	.05	.62	30	.05	.72	120	.23
8	.74	15	.03	.82	50	.11	.44	65	.08
9	.67	20	.04	.93	80	.20	.62	90	.15
10	.68	35	.06	.62	75	.13	1.0	130	.35
11	1.3	50	.18	.62	70	.12	1.5	140	.57
12	1.3	85	.30	.52	65	.09	.52	60	.08
13	1.3	140	.49	.52	60	.08	.30	30	.02
14	1.4	240	.91	.44	60	.07	.24	20	.01
15	1.5	370	1.5	.44	100	.12	.30	30	.02
16	1.5	470	1.9	.62	120	.20	.62	50	.08
17	1.5	450	1.8	.62	130	.22	.88	80	.19
18	1.5	350	1.4	.62	140	.23	.93	120	.30
19	1.4	290	1.1	.93	150	.38	.82	120	.27
20	.85	280	.64	.93	130	.33	.62	110	.18
21	.69	280	.52	.93	95	.24	.52	95	.13
22	.67	280	.51	.82	60	.13	.44	85	.10
23	.66	270	.48	.72	60	.12	.52	80	.11
24	.66	230	.41	.93	90	.23	.52	70	.10
25	.66	160	.29	.93	90	.23	.30	65	.05
26	.66	120	.21	.82	75	.17	.44	60	.07
27	.66	110	.20	.52	55	.08	.44	55	.07
28	.65	100	.18	.93	90	.23	.44	50	.06
29	.63	90	.15	1.0	140	.38	.52	45	.06
30	.60	85	.14	.93	100	.25	.44	40	.05
31	.56	70	.11	.72	75	.15	---	---	---
TOTAL	30.44	---	14.42	21.22	---	4.77	16.94	---	4.12
YEAR	1730.69		2052.76						

11046550 SAN JUAN CREEK AT SAN JUAN CAPISTRANO, CALIF.--Continued

SUMMARY OF WATER AND SEDIMENT DISCHARGE, WATER YEAR OCTOBER 1974 TO SEPTEMBER 1975

MONTH	WATER DISCHARGE CFS-DAYS	SUSPENDED SEDIMENT DISCHARGE TONS	BEDLOAD DISCHARGE TONS	TOTAL SEDIMENT DISCHARGE TONS
OCTOBER 1974	15.13	2.32	2	4
NOVEMBER ...	48.78	3.06	6	9
DECEMBER ...	162.40	172.69	25	198
JANUARY 1975	128.70	11.36	20	31
FEBRUARY ...	175.90	129.50	29	158
MARCH	455.70	1200.04	97	1300
APRIL	458.30	496.09	101	597
MAY	153.70	9.39	24	33
JUNE	63.48	5.00	9	14
JULY	30.44	14.42	4	18
AUGUST	21.22	4.77	2	7
SEPTEMBER ..	16.94	4.12	2	6
TOTAL	1730.69	2052.76	321	2375

PARTICLE-SIZE OF SUSPENDED SEDIMENT, WATER YEAR OCTOBER 1974 TO SEPTEMBER 1975

DATE	TIME	TEMPERATURE (DEG C)	INSTANTANEOUS DISCHARGE (CFS)	SUSPENDED SEDIMENT (MG/L)	SUSPENDED SEDIMENT DISCHARGE (T/DAY)	SUS. SED. FALL DIAM. % FINER THAN .002 MM	SUS. SED. FALL DIAM. % FINER THAN .004 MM	SUS. SED. FALL DIAM. % FINER THAN .008 MM	SUS. SED. FALL DIAM. % FINER THAN .016 MM	SUS. SED. FALL DIAM. % FINER THAN .031 MM
DEC.										
04...	0750	13.0	21	1670	95	44	53	64	78	88
05...	1345	20.5	7.3	116	2.3	--	--	--	--	--
29...	1045	12.0	17	703	32	70	79	82	85	88
FEB.										
03...	0815	10.0	42	522	59	56	64	72	80	88
03...	1200	12.5	30	876	71	63	72	76	80	83
MAR.										
06...	1310	18.0	26	10900	765	74	90	99	100	--
08...	1330	14.0	64	885	153	47	55	60	64	68
08...	1420	15.0	62	1560	261	61	71	80	87	91
11...	0815	9.0	60	615	100	67	77	86	90	93
21...	1245	20.0	8.5	59	1.4	--	--	--	--	--
JULY										
17...	1020	20.0	1.5	463	1.9	76	89	92	97	98
SEP.										
11...	0935	18.5	1.7	124	.57	--	--	--	--	--

DATE	SUS. SED. FALL DIAM. % FINER THAN .062 MM	SUS. SED. SIEVE DIAM. % FINER THAN .062 MM	SUS. SED. FALL DIAM. % FINER THAN .125 MM	SUS. SED. SIEVE DIAM. % FINER THAN .125 MM	SUS. SED. FALL DIAM. % FINER THAN .250 MM	SUS. SED. SIEVE DIAM. % FINER THAN .250 MM	SUS. SED. FALL DIAM. % FINER THAN .500 MM	SUS. SED. SIEVE DIAM. % FINER THAN .500 MM	SUS. SED. FALL DIAM. % FINER THAN 1.00 MM	SUS. SED. SIEVE DIAM. % FINER THAN 1.00 MM
DEC.										
04...	--	94	--	98	--	99	--	100	--	--
05...	--	97	--	99	--	100	--	--	--	--
29...	--	89	--	94	--	99	--	100	--	--
FEB.										
03...	--	92	--	99	--	99	--	100	--	--
03...	--	85	--	89	--	94	--	99	--	100
MAR.										
06...	--	--	--	--	--	--	--	--	--	--
08...	72	--	75	--	85	--	99	--	100	--
08...	92	--	94	--	97	--	100	--	--	--
11...	--	95	--	97	--	98	--	100	--	--
21...	--	85	--	90	--	95	--	99	--	100
JULY										
17...	--	98	--	99	--	99	--	100	--	--
SEP.										
11...	--	97	--	100	--	--	--	--	--	--

11047200 OSO CREEK AT CROWN VALLEY PARKWAY, NEAR MISSION VIEJO, CALIF.

LOCATION.--Lat 33°33'29", long 117°40'33", in SE¼ sec.14, T.7 S., R.8 W., Orange County, on right upstream side of Crown Valley Parkway bridge, 2.7 mi (4.3 km) south of Mission Viejo, and 4.0 mi (6.4 km) north of San Juan Capistrano.

DRAINAGE AREA.--14.0 mi² (36.3 km²).

PERIOD OF RECORD.--December 1969 to current year.

GAGE.--Water stage recorder. Altitude of gage is 250 ft (76 m), from topographic map.

AVERAGE DISCHARGE.--5 years (1970-75), 2.18 ft³/s (0.0617 m³/s), 1,580 acre-ft/yr (1.95 hm³/yr).

EXTREMES.--Current year: Maximum discharge, 825 ft³/s (23.4 m³/s) Dec. 4 (gage height, 6.45 ft or 1.966 m); minimum daily, 0.40 ft³/s (0.011 m³/s) many days.
Period of record: Maximum discharge, 1,630 ft³/s (46.2 m³/s) Feb. 11, 1973 (gage height, 7.67 ft or 2.338 m); no flow at times in most years.

REMARKS.--Records poor. No regulation or diversion above station.

COOPERATION. Records furnished by Orange County Flood Control District.

DISCHARGE, IN CUBIC FEET PER SECOND, WATER YEAR OCTOBER 1974 TO SEPTEMBER 1975
MEAN VALUES

DAY	OCT	NOV	DEC	JAN	FEB	MAR	APR	MAY	JUN	JUL	AUG	SEP
1	.70	2.0	2.0	.60	.80	.80	.90	1.2	.40	1.0	.90	1.8
2	.70	2.8	1.8	.60	.60	.80	.90	1.1	.40	.80	1.0	1.4
3	.70	2.1	1.7	.60	16	.80	.70	1.0	.40	.90	1.1	.80
4	.70	1.8	140	.60	5.2	.80	.60	1.1	.50	1.1	1.1	1.0
5	.60	1.7	3.0	.60	5.0	1.2	.70	1.0	.50	1.5	1.2	1.0
6	.60	1.6	1.2	.60	2.1	4.9	2.0	1.0	.60	1.8	1.4	1.0
7	.60	1.5	.90	.70	1.6	2.8	2.4	1.0	.60	1.8	1.4	.90
8	1.0	1.5	.80	.70	1.6	21	2.2	.90	.60	1.7	1.5	.90
9	.80	1.5	.70	.70	15	15	6.6	.80	.60	1.6	1.4	.90
10	.70	1.5	.60	.70	7.1	13	3.4	.70	.60	1.6	1.7	.90
11	.60	1.5	.60	.60	2.1	22	1.6	.70	.60	1.6	1.8	1.0
12	.60	1.6	.40	.60	1.8	15	1.4	.60	.60	1.4	1.8	1.0
13	.60	1.6	.40	.60	1.4	8.9	1.2	.60	.70	1.4	1.8	1.0
14	.60	1.7	.40	.70	1.5	9.3	1.1	.60	.70	1.4	1.7	1.0
15	.50	1.7	.50	.70	1.2	3.2	1.2	.40	.70	1.2	1.7	1.0
16	.40	1.7	.60	.70	1.0	2.2	1.6	.40	.80	1.1	1.7	.90
17	.40	1.7	.60	.70	.90	2.1	2.6	.40	.80	1.1	2.4	.90
18	.50	1.6	.40	.70	.90	2.0	1.7	.40	.80	1.5	3.2	.90
19	.60	1.6	.40	.70	.80	1.8	1.1	.40	.90	1.5	2.4	.90
20	.60	1.6	.40	.70	.90	1.7	1.0	.90	1.0	1.5	1.8	.90
21	.60	1.7	.50	.80	.90	1.8	.90	.70	1.0	1.2	1.4	.80
22	.60	2.0	.60	.70	.80	4.0	.90	.50	1.0	1.2	1.4	.80
23	.60	2.0	.50	.60	.80	3.2	.90	.40	.90	1.2	1.2	.80
24	.50	1.7	.50	.70	.90	2.6	.90	.40	.80	1.1	1.2	.80
25	.50	1.6	.50	.70	1.0	2.2	1.1	.40	.70	1.1	1.2	.80
26	.70	1.6	.50	.70	.90	2.0	1.2	.40	.70	1.1	1.2	.70
27	1.4	1.7	.50	.70	.90	1.4	1.1	.40	.70	1.1	1.5	.70
28	14	2.0	12	.70	.90	1.1	1.1	.40	.80	1.0	1.5	.70
29	14	2.1	22	.60	---	1.0	1.2	.40	.80	1.0	1.6	.70
30	3.4	2.0	2.0	1.6	---	.90	1.2	.40	.80	1.0	1.7	.70
31	2.0	---	.60	1.5	---	.90	---	.40	---	.90	1.8	---
TOTAL	50.80	52.7	197.60	22.40	74.60	150.40	45.40	20.00	21.00	39.40	48.70	27.60
MEAN	1.64	1.76	6.37	.72	2.66	4.85	1.51	.65	.70	1.27	1.57	.92
MAX	14	2.8	140	1.6	16	22	6.6	1.2	1.0	1.8	3.2	1.8
MIN	.40	1.5	.40	.60	.60	.80	.60	.40	.40	.80	.90	.70
AC-FT	101	105	392	44	148	298	90	40	42	78	97	55

CAL YR 1974 TOTAL 1149.10 MEAN 3.15 MAX 142 MIN .30 AC-FT 2280
WTR YR 1975 TOTAL 750.60 MEAN 2.06 MAX 140 MIN .40 AC-FT 1490

110473000 ARROYO TRABUCO AT SAN JUAN CAPISTRANO, CALIF.

LOCATION.--Lat 33°29'54", long 117°39'54", on line between secs.1 and 12, T.8 S., R.8 W., Orange County, on downstream side of bridge on Del Obispo Street in San Juan Capistrano.

DRAINAGE AREA.--54.1 mi^2 (140 km^2).

PERIOD OF RECORD.--October 1972 to current year.

GAGE.--Water-stage recorder. Datum of gage is 80 ft (24.4 m), from topograhic map.

EXTREMES.--Current year: Maximum discharge, 1,020 ft^3/s (28.8 m^3/s) Dec. 4 (gage height, 2.22 ft or 0.676 m); minimum daily, 0.05 ft^3/s (0.001 m^3/s) Dec. 2, 3.
Period of record: Maximum discharge, 1,380 ft^3/s (39.1 m^3/s) Feb. 11, 1973 (gage height, 2.50 ft or 0.762 m); no flow many days during most years.

REMARKS.--Records poor. No regulation or diversion above station.

COOPERATION.--Records furnished by Orange County Flood Control District and reviewed by the Geological Survey.

DISCHARGE, IN CUBIC FEET PER SECOND, WATER YEAR OCTOBER 1974 TO SEPTEMBER 1975
MEAN VALUES

DAY	OCT	NOV	DEC	JAN	FEB	MAR	APR	MAY	JUN	JUL	AUG	SEP
1	.10	2.1	.10	2.0	1.0	1.8	4.6	2.7	2.0	2.0	.90	.70
2	.10	1.8	.05	1.2	.20	1.7	2.7	3.0	2.3	1.9	.90	.70
3	.10	1.6	.05	.80	63	1.6	2.0	3.2	2.6	1.8	.90	.70
4	.10	1.4	143	.50	1.6	1.5	1.5	3.3	2.8	1.8	.80	.70
5	.10	1.2	1.3	.40	3.0	3.0	8.9	3.5	2.8	1.7	.80	.70
6	.10	1.1	.10	.40	1.0	20	24	3.6	2.7	1.7	.80	.70
7	.10	1.0	.10	.50	.80	4.4	1.4	3.6	2.5	1.7	.80	.70
8	.10	1.0	.20	.60	.70	134	60	3.5	2.3	1.6	.80	.70
9	.10	.90	.30	.70	37	7.9	107	3.5	2.0	1.6	.80	.70
10	.10	.90	.50	.80	8.0	8.2	37	3.3	1.8	1.6	.80	.70
11	.10	.90	.70	.80	1.8	36	18	3.1	1.6	1.5	.80	.70
12	.10	.90	1.0	.90	.90	14	10	2.8	1.5	1.5	.80	.70
13	.10	.90	1.1	.90	.60	8.0	6.7	2.7	1.4	1.5	.80	.70
14	.10	.90	1.2	.90	.50	22	4.6	2.5	1.4	1.4	.80	.70
15	.10	.90	1.3	.90	.40	7.5	7.0	2.3	1.4	1.4	.80	.70
16	.10	.80	1.2	.90	.30	5.0	6.0	2.2	1.5	1.3	.80	.70
17	.10	.80	1.1	.90	.30	3.5	32	2.1	1.6	1.3	.80	.70
18	.10	.70	1.1	.90	.30	2.7	14	2.0	1.7	1.3	.80	.70
19	.10	.70	1.0	.90	.40	2.1	7.8	2.0	1.8	1.2	.80	.70
20	.10	.60	.90	.80	.50	1.7	5.2	1.9	1.8	1.2	.80	.70
21	.10	.60	.90	.80	.60	1.5	3.8	1.9	1.9	1.2	.80	.70
22	.10	.50	.90	.80	.80	22	2.9	2.0	1.9	1.1	.80	.70
23	.10	.40	.80	.70	1.0	5.0	2.3	2.2	2.0	1.1	.80	.70
24	.10	.40	.80	.70	1.3	3.1	1.9	2.3	2.0	1.1	.80	.70
25	.10	.30	.80	.60	1.6	4.0	5.5	2.3	1.9	1.0	.70	.70
26	.10	.30	.80	.60	1.8	2.6	4.5	2.3	1.8	1.0	.70	.70
27	.10	.20	.90	.60	1.9	2.0	3.6	2.2	1.6	1.0	.70	.70
28	4.4	.20	52	.60	1.8	1.6	3.0	2.1	1.5	1.0	.70	.70
29	10	.10	44	.50	---	1.4	2.5	2.1	1.4	.90	.70	.70
30	3.6	.20	9.6	11	---	1.3	2.5	2.0	1.7	.90	.70	.70
31	2.6	---	4.0	7.5	---	1.2	---	1.9	---	.90	.70	---
TOTAL	23.30	24.30	271.80	41.10	133.10	332.3	392.9	80.1	57.2	42.20	24.40	21.00
MEAN	.75	.81	8.77	1.33	4.75	10.7	13.1	2.58	1.91	1.36	.79	.70
MAX	10	2.1	143	11	63	134	107	3.6	2.8	2.0	.90	.70
MIN	.10	.10	.05	.40	.20	1.2	1.4	1.9	1.4	.90	.70	.70
AC-FT	46	48	539	82	264	659	779	159	113	84	48	42

CAL YR 1974 TOTAL 1800.30 MEAN 4.93 MAX 157 MIN 0 AC-FT 3570
WTR YR 1975 TOTAL 1443.70 MEAN 3.96 MAX 143 MIN .05 AC-FT 2860

11047300 ARROYO TRABUCO AT SAN JUAN CAPISTRANO, CALIF.--Continued

PERIOD OF RECORD.--Water temperatures: October 1970 to current year.
Sediment records: October 1970 to current year.

EXTREMES.--Current year:
Sediment concentrations: Maximum daily, 5,240 mg/l Dec. 4; minimum daily, 3 mg/l on several days during October and December.
Sediment discharge: Maximum daily, 4,050 tons (3,670 tonnes) Dec. 4; minimum daily, 0 tons (0 tonnes) on many days.
Period of record:
Sediment concentrations: Maximum daily, 8,900 mg/l Feb. 11, 1973; minimum daily, no flow for many days most years.
Sediment discharge: Maximum daily, 7,820 tons (7,090 tonnes) Feb. 11, 1973; minimum daily, 0 tons (0 tonnes) on many days each year.

REMARKS.--Records of discharge furnished by Orange County Flood Control District; discharges estimated during construction period of July to August.

TEMPERATURE (DEG. C) OF WATER, WATER YEAR OCTOBER 1974 TO SEPTEMBER 1975
ONCE-DAILY

DAY	OCT	NOV	DEC	JAN	FEB	MAR	APR	MAY	JUN	JUL	AUG	SEP
1	---	---	---	---	---	---	16.5	---	---	---	20.0	---
2	---	---	---	---	---	---	---	15.0	18.5	---	---	---
3	---	---	18.0	8.0	12.0	---	---	---	---	21.5	---	---
4	20.0	---	14.0	---	11.0	---	18.0	---	---	27.0	24.0	21.5
5	---	---	13.0	---	13.0	---	---	---	---	---	---	28.0
6	---	---	12.0	---	12.0	12.0	---	---	23.0	---	---	---
7	---	22.0	---	---	12.0	14.0	---	---	---	---	---	---
8	---	11.0	---	---	---	14.0	13.0	22.5	---	---	29.0	---
9	---	---	---	---	14.0	14.0	11.0	15.0	25.5	---	---	---
10	25.5	---	---	9.0	13.0	13.0	17.0	---	---	26.0	---	---
11	17.0	---	---	---	10.0	10.0	14.0	---	---	30.0	---	20.5
12	---	---	---	---	---	10.0	---	---	---	---	---	20.0
13	---	---	18.0	---	---	13.0	---	---	19.0	---	---	---
14	---	22.5	---	---	---	11.0	---	---	---	---	20.5	---
15	---	16.0	---	---	---	10.0	15.0	---	---	---	29.0	---
16	---	---	---	---	---	---	---	19.0	18.5	---	---	---
17	---	---	---	10.0	---	---	12.5	---	---	26.5	---	---
18	19.0	---	---	---	---	---	12.0	---	---	29.0	---	---
19	---	---	18.5	---	---	---	---	---	---	---	---	22.5
20	---	---	17.0	---	12.0	---	---	---	24.0	---	---	---
21	---	18.0	---	---	---	14.0	---	20.5	---	---	20.0	---
22	24.0	15.5	---	---	---	14.0	---	---	---	---	24.0	---
23	---	---	---	---	---	23.0	---	15.0	19.0	---	---	---
24	---	---	---	9.0	---	14.5	---	---	---	23.5	---	---
25	14.0	---	---	---	---	---	15.0	---	---	25.0	---	---
26	---	---	---	---	---	20.5	---	---	---	---	---	27.0
27	---	---	8.0	17.0	18.0	---	---	---	12.0	---	---	---
28	---	---	9.0	---	19.0	15.0	---	---	---	26.0	21.5	---
29	---	19.0	10.0	---	---	---	17.5	---	---	---	29.0	---
30	---	---	13.5	---	---	---	---	18.0	---	---	---	---
31	---	---	---	7.0	---	---	---	---	---	---	---	---
MONTH	---	---	---	---	---	---	---	---	---	---	---	---

11047300 ARROYO TRABUCO AT SAN JUAN CAPISTRANO, CALIF.--Continued

SUSPENDED-SEDIMENT DISCHARGE (TONS/DAY), WATER YEAR OCTOBER 1974 TO SEPTEMBER 1975

	OCTOBER			NOVEMBER			DECEMBER		
DAY	MEAN DISCHARGE (CFS)	MEAN CONCEN-TRATION (MG/L)	SEDIMENT DISCHARGE (TONS/DAY)	MEAN DISCHARGE (CFS)	MEAN CONCEN-TRATION (MG/L)	SEDIMENT DISCHARGE (TONS/DAY)	MEAN DISCHARGE (CFS)	MEAN CONCEN-TRATION (MG/L)	SEDIMENT DISCHARGE (TONS/DAY)
1	.10	30	.01	2.1	20	.11	.10	5	0
2	.10	30	.01	1.8	15	.07	.05	4	0
3	.10	25	.01	1.6	10	.04	.05	3	0
4	.10	25	.01	1.4	8	.03	143	5240	4050
5	.10	20	.01	1.2	7	.02	1.3	320	1.1
6	.10	20	.01	1.1	7	.02	.10	70	.02
7	.10	15	0	1.0	7	.02	.10	30	.01
8	.10	15	0	1.0	8	.02	.20	25	.01
9	.10	15	0	.90	10	.02	.30	30	.02
10	.10	10	0	.90	10	.02	.50	35	.05
11	.10	10	0	.90	15	.04	.70	35	.07
12	.10	9	0	.90	15	.04	1.0	35	.09
13	.10	9	0	.90	15	.04	1.1	35	.10
14	.10	8	0	.90	15	.04	1.2	30	.10
15	.10	7	0	.90	10	.02	1.3	30	.11
16	.10	6	0	.80	10	.02	1.2	30	.10
17	.10	6	0	.80	9	.02	1.1	25	.07
18	.10	5	0	.70	8	.02	1.1	25	.07
19	.10	5	0	.70	7	.01	1.0	20	.05
20	.10	4	0	.60	6	.01	.90	20	.05
21	.10	4	0	.60	6	.01	.90	20	.05
22	.10	4	0	.50	5	.01	.90	15	.04
23	.10	3	0	.40	5	.01	.80	15	.03
24	.10	3	0	.40	4	0	.80	15	.03
25	.10	3	0	.30	4	0	.80	10	.02
26	.10	3	0	.30	4	0	.80	10	.02
27	.10	3	0	.20	6	0	.90	10	.02
28	4.4	40	.48	.20	7	0	52	1120	287
29	10	90	2.4	.10	8	0	44	1030	220
30	3.6	45	.44	.20	7	0	9.6	40	1.0
31	2.6	25	.18	---	---	---	4.0	15	.16
TOTAL	23.30	---	3.56	24.30	---	.66	271.80	---	4560.39

	JANUARY			FEBRUARY			MARCH		
DAY	MEAN DISCHARGE (CFS)	MEAN CONCEN-TRATION (MG/L)	SEDIMENT DISCHARGE (TONS/DAY)	MEAN DISCHARGE (CFS)	MEAN CONCEN-TRATION (MG/L)	SEDIMENT DISCHARGE (TONS/DAY)	MEAN DISCHARGE (CFS)	MEAN CONCEN-TRATION (MG/L)	SEDIMENT DISCHARGE (TONS/DAY)
1	2.0	10	.05	1.0	25	.07	1.8	40	.19
2	1.2	9	.03	.20	15	.01	1.7	35	.16
3	.80	9	.02	63	3520	1680	1.6	30	.13
4	.50	8	.01	1.6	140	.60	1.5	25	.10
5	.40	9	.01	3.0	220	1.8	3.0	100	.81
6	.40	15	.02	1.0	30	.08	20	1260	120
7	.50	15	.02	.80	15	.03	4.4	110	1.3
8	.60	20	.03	.70	10	.02	134	3080	1610
9	.70	20	.04	37	920	157	7.9	350	7.5
10	.80	20	.04	8.0	270	5.8	8.2	800	81
11	.80	25	.05	1.8	40	.19	36	2380	231
12	.90	25	.06	.90	15	.04	14	330	12
13	.90	25	.06	.60	10	.02	8.0	90	1.9
14	.90	25	.06	.50	8	.01	22	510	30
15	.90	25	.06	.40	7	.01	7.5	50	1.0
16	.90	30	.07	.30	7	.01	5.0	35	.47
17	.90	30	.07	.30	10	.01	3.5	30	.28
18	.90	30	.07	.30	15	.01	2.7	25	.18
19	.90	30	.07	.40	20	.02	2.1	20	.11
20	.80	30	.06	.50	35	.05	1.7	20	.09
21	.80	30	.06	.60	40	.06	1.5	15	.06
22	.80	25	.05	.80	40	.09	22	660	39
23	.70	25	.05	1.0	45	.12	5.0	140	1.9
24	.70	25	.05	1.3	45	.16	3.1	15	.13
25	.60	25	.04	1.6	45	.19	4.0	25	.27
26	.60	20	.03	1.8	45	.22	2.6	20	.14
27	.60	20	.03	1.9	40	.21	2.0	15	.08
28	.60	15	.02	1.8	40	.19	1.6	10	.04
29	.50	15	.02	---	---	---	1.4	9	.03
30	11	70	3.1	---	---	---	1.3	8	.03
31	7.5	40	.81	---	---	---	1.2	7	.02
TOTAL	41.10	---	5.16	133.10	---	1847.02	332.3	---	2139.92

11047300 ARROYO TRABUCO AT SAN JUAN CAPISTRANO, CALIF.--Continued

SUSPENDED-SEDIMENT DISCHARGE (TONS/DAY), WATER YEAR OCTOBER 1974 TO SEPTEMBER 1975

	APRIL			MAY			JUNE		
DAY	MEAN DISCHARGE (CFS)	MEAN CONCEN-TRATION (MG/L)	SEDIMENT DISCHARGE (TONS/DAY)	MEAN DISCHARGE (CFS)	MEAN CONCEN-TRATION (MG/L)	SEDIMENT DISCHARGE (TONS/DAY)	MEAN DISCHARGE (CFS)	MEAN CONCEN-TRATION (MG/L)	SEDIMENT DISCHARGE (TONS/DAY)
1	4.6	60	.75	2.7	25	.18	2.0	45	.24
2	2.7	35	.26	3.0	50	.41	2.3	60	.37
3	2.0	20	.11	3.2	90	.78	2.6	65	.46
4	1.5	15	.06	3.3	95	.85	2.8	70	.53
5	8.9	70	1.7	3.5	100	.95	2.8	65	.49
6	24	350	23	3.6	100	.97	2.7	60	.44
7	1.4	70	.26	3.6	95	.92	2.5	40	.27
8	60	760	123	3.5	90	.85	2.3	20	.12
9	107	1820	526	3.5	70	.66	2.0	15	.08
10	37	130	13	3.3	50	.45	1.8	10	.05
11	18	70	3.4	3.1	35	.29	1.6	10	.04
12	10	40	1.1	2.8	25	.19	1.5	10	.04
13	6.7	30	.54	2.7	20	.15	1.4	15	.06
14	4.6	25	.31	2.5	15	.10	1.4	15	.06
15	7.0	330	6.2	2.3	15	.09	1.4	15	.06
16	6.0	300	4.9	2.2	10	.06	1.5	15	.06
17	32	1140	98	2.1	10	.06	1.6	15	.06
18	14	35	1.3	2.0	9	.05	1.7	15	.07
19	7.8	20	.42	2.0	9	.05	1.8	20	.10
20	5.2	15	.21	1.9	8	.04	1.8	20	.10
21	3.8	10	.10	1.9	8	.04	1.9	20	.10
22	2.9	9	.07	2.0	8	.04	1.9	20	.10
23	2.3	8	.05	2.2	9	.05	2.0	20	.11
24	1.9	7	.04	2.3	15	.09	2.0	20	.11
25	5.5	40	.59	2.3	25	.16	1.9	20	.10
26	4.5	25	.30	2.3	35	.22	1.8	15	.07
27	3.6	20	.19	2.2	40	.24	1.6	15	.06
28	3.0	15	.12	2.1	45	.26	1.5	10	.04
29	2.5	10	.07	2.1	45	.26	1.4	10	.04
30	2.5	10	.07	2.0	40	.22	1.7	15	.07
31	---	---	---	1.9	35	.18	---	---	---
TOTAL	392.9	---	806.12	80.1	---	9.86	57.2	---	4.50

	JULY			AUGUST			SEPTEMBER		
DAY	MEAN DISCHARGE (CFS)	MEAN CONCEN-TRATION (MG/L)	SEDIMENT DISCHARGE (TONS/DAY)	MEAN DISCHARGE (CFS)	MEAN CONCEN-TRATION (MG/L)	SEDIMENT DISCHARGE (TONS/DAY)	MEAN DISCHARGE (CFS)	MEAN CONCEN-TRATION (MG/L)	SEDIMENT DISCHARGE (TONS/DAY)
1	2.0	25	.14	.90	15	.04	.70	50	.09
2	1.9	35	.18	.90	10	.02	.70	50	.09
3	1.8	40	.19	.90	7	.02	.70	45	.09
4	1.8	35	.17	.80	5	.01	.70	35	.07
5	1.7	30	.14	.80	5	.01	.70	20	.04
6	1.7	25	.11	.80	15	.03	.70	15	.03
7	1.7	25	.11	.80	30	.06	.70	15	.03
8	1.6	20	.09	.80	40	.09	.70	15	.03
9	1.6	20	.09	.80	45	.10	.70	10	.02
10	1.6	20	.09	.80	45	.10	.70	10	.02
11	1.5	15	.06	.80	45	.10	.70	15	.03
12	1.5	15	.06	.80	45	.10	.70	20	.04
13	1.5	20	.08	.80	45	.10	.70	30	.06
14	1.4	20	.08	.80	40	.09	.70	35	.07
15	1.4	25	.09	.80	30	.06	.70	40	.08
16	1.3	25	.09	.80	25	.05	.70	40	.08
17	1.3	25	.09	.80	15	.03	.70	40	.08
18	1.3	25	.09	.80	10	.02	.70	35	.07
19	1.2	20	.06	.80	8	.02	.70	30	.06
20	1.2	20	.06	.80	5	.01	.70	25	.05
21	1.2	20	.06	.80	6	.01	.70	20	.04
22	1.1	25	.07	.80	10	.02	.70	15	.03
23	1.1	25	.07	.80	15	.03	.70	15	.03
24	1.1	30	.09	.80	10	.02	.70	15	.03
25	1.0	35	.09	.70	10	.02	.70	15	.03
26	1.0	35	.09	.70	9	.02	.70	20	.04
27	1.0	30	.08	.70	9	.02	.70	20	.04
28	1.0	20	.05	.70	10	.02	.70	20	.04
29	.90	10	.02	.70	20	.04	.70	15	.03
30	.90	10	.02	.70	40	.08	.70	15	.03
31	.90	10	.02	.70	50	.09	---	---	---
TOTAL	42.20	---	2.73	24.40	---	1.43	21.00	---	1.47
YEAR	1443.70		9382.82						

11047300 ARROYO TRABUCO AT SAN JUAN CAPISTRANO, CALIF.--Continued

SUMMARY OF WATER AND SEDIMENT DISCHARGE, WATER YEAR OCTOBER 1974 TO SEPTEMBER 1975

MONTH	WATER DISCHARGE CFS-DAYS	SUSPENDED SEDIMENT DISCHARGE TONS	BEDLOAD DISCHARGE TONS	TOTAL SEDIMENT DISCHARGE TONS
OCTOBER 1974	23.30	3.56	15	19
NOVEMBER ...	24.30	0.66	0	1
DECEMBER ...	271.80	4560.39	2090	6650
JANUARY 1975	41.10	5.16	21	26
FEBRUARY ...	133.10	1847.02	597	2440
MARCH	332.30	2139.92	1800	3940
APRIL	392.90	806.12	1920	2730
MAY	80.10	9.86	6	16
JUNE	57.20	4.50	1	5
JULY	42.20	2.73	0	3
AUGUST	24.40	1.43	0	1
SEPTEMBER ..	21.00	1.47	0	1
TOTAL	1443.70	9382.82	6450	15832

PARTICLE-SIZE DISTRIBUTION OF SUSPENDED SEDIMENT, WATER YEAR OCTOBER 1974 TO SEPTEMBER 1975

DATE	TIME	TEMPERATURE (DEG C)	INSTANTANEOUS DISCHARGE (CFS)	SUSPENDED SEDIMENT (MG/L)	SUSPENDED SEDIMENT DISCHARGE (T/DAY)	SUS. SED. FALL DIAM. % FINER THAN .002 MM	SUS. SED. FALL DIAM. % FINER THAN .004 MM	SUS. SED. FALL DIAM. % FINER THAN .008 MM	SUS. SED. FALL DIAM. % FINER THAN .016 MM	SUS. SED. FALL DIAM. % FINER THAN .031 MM	SUS. SED. FALL DIAM. % FINER THAN .062 MM
DEC.											
04...	0820	14.0	470	13500	17100	30	31	38	46	57	68
28...	1130	11.0	100	2170	586	56	61	73	84	93	99
29...	0715	10.0	49	672	89	63	73	80	86	90	--
FEB.											
03...	1130	12.0	350	13800	13000	27	29	33	40	50	60
MAR.											
08...	1300	15.0	137	3630	1340	50	51	54	63	70	78
08...	1715	15.0	286	4290	3310	49	51	52	69	74	86
22...	1200	17.0	22	2240	133	51	55	59	75	86	96
APR.											
09...	0730	11.0	64	2090	361	54	59	66	75	83	89
17...	0900	12.5	69	3140	585	27	27	29	37	48	59

DATE	SUS. SED. SIEVE DIAM. % FINER THAN .062 MM	SUS. SED. FALL DIAM. % FINER THAN .125 MM	SUS. SED. SIEVE DIAM. % FINER THAN .125 MM	SUS. SED. FALL DIAM. % FINER THAN .250 MM	SUS. SED. SIEVE DIAM. % FINER THAN .250 MM	SUS. SED. FALL DIAM. % FINER THAN .500 MM	SUS. SED. SIEVE DIAM. % FINER THAN .500 MM	SUS. SED. FALL DIAM. % FINER THAN 1.00 MM	SUS. SED. SIEVE DIAM. % FINER THAN 1.00 MM	SUS. SED. FALL DIAM. % FINER THAN 2.00 MM
DEC.										
04...	--	78	--	88	--	96	--	99	--	100
28...	--	100	--	--	--	--	--	--	--	--
29...	92	--	94	--	97	--	99	--	100	--
FEB.										
03...	--	67	--	72	--	85	--	98	--	100
MAR.										
08...	--	82	--	89	--	96	--	100	--	--
08...	--	94	--	97	--	99	--	100	--	--
22...	--	100	--	--	--	--	--	--	--	--
APR.										
09...	--	93	--	96	--	100	--	--	--	--
17...	--	72	--	91	--	100	--	--	--	--

11047500 ALISO CREEK AT EL TORO, CALIF.

LOCATION.--Lat 33°37'34", long 117°41'03", in Canada de los Alisos Grant, Orange County, near center of channel on upstream side of Second Street Bridge at El Toro.

DRAINAGE AREA.--7.91 mi^2 (20.5 km^2).

PERIOD OF RECORD.--October 1930 to current year.

GAGE.--Water-stage recorder. Altitude of gage is 440 ft (134 m), from topographic map. Prior to July 1962, at different datum.

AVERAGE DISCHARGE.--45 years, 0.72 ft^3/s (0.0204 m^3/s), 522 acre-ft/yr (644,000 m^3/yr).

EXTREMES.--Current year: Maximum daily discharge, 40 ft^3/s (1.13 m^3/s) Dec. 4; no flow many days.
Period of record: Maximum discharge, 2,500 ft^3/s (70.8 m^3/s) Feb. 24, 1969 (gage height, 11.00 ft or 3.353 m, from floodmark), from rating curve extended above 220 ft^3/s (6.23 m^3/s) on basis of slope-area measurement of maximum flow; no flow most of each year.

REMARKS.--Records poor. No regulation or diversion above station; some pumping from wells along stream. At times since 1964, Metropolitan Water District has wasted water to creek.

COOPERATION.--Records furnished by Orange County Flood Control District.

DISCHARGE, IN CUBIC FEET PER SECOND, WATER YEAR OCTOBER 1974 TO SEPTEMBER 1975
MEAN VALUES

DAY	OCT	NOV	DEC	JAN	FEB	MAR	APR	MAY	JUN	JUL	AUG	SEP
1	0		0		0	0	0	0	.10			
2	0		0		0	0	0	0	.10			
3	0		0		8.6	0	0	0	.10			
4	0		40		1.0	0	0	0	.10			
5	0		.70		0	.80	1.8	0	.10			
6	0		0		0	4.5	5.0	0	.50			
7	0		0		0	0	0	0	.50			
8	0		0		0	30	12	0	.50			
9	0		0		5.6	1.0	6.5	0	.40			
10	0		0		.10	8.0	.30	0	.40			
11	0		0		0	7.0	.10	0	.30			
12	0		0		0	.50	.10	0	.30			
13	0		0		0	0	.10	0	.30			
14	0		0		0	2.4	.10	0	.30			
15	0		0		0	.50	.50	0	.20			
16	0		0		0	.50	.30	.10	.20			
17	0		0		0	.40	3.0	.10	.10			
18	0		0		0	.30	1.3	0	.20			
19	0		0		0	.20	.40	2.0	.10			
20	0		0		0	.10	.30	2.0	.10			
21	0		0		0	.10	.10	.40	.10			
22	0		0		0	3.5	.10	.30	.10			
23	0		0		0	.10	.10	.30	.10			
24	0		0		0	0	.10	.20	0			
25	0		0		0	0	.10	.20	0			
26	.20		0		0	0	.20	.10	0			
27	0		0		0	0	.50	.10	0			
28	1.6		0		0	0	.50	.10	0			
29	.40		0		---	0	0	.10	0			
30	0		0		---	0	0	.30	0			
31	0	---	0		---	.20	---	.10	---			---
TOTAL	2.20	0	40.70	0	15.30	60.10	33.50	6.40	5.20	0	0	0
MEAN	.071	0	1.31	0	.55	1.94	1.12	.21	.17	0	0	0
MAX	1.6	0	40	0	8.6	30	12	2.0	.50	0	0	0
MIN	0	0	0	0	0	0	0	0	0	0	0	0
AC-FT	4.4	0	81	0	30	119	66	13	10	0	0	0

CAL YR 1974 TOTAL 229.30 MEAN .63 MAX 59 MIN 0 AC-FT 455
WTR YR 1975 TOTAL 163.40 MEAN .45 MAX 40 MIN 0 AC-FT 324

NOTE.--No gage-height record Aug. 1 to Sept. 30.

11048500 SAN DIEGO CREEK NEAR IRVINE, CALIF.

LOCATION.--Lat 33°40'20", long 117°47'10", in San Joaquin Grant, Orange County, on left bank 200 ft (61 m) downstream from Jeffrey Road Bridge, and 1.5 mi (2.4 km) west of Irvine.

DRAINAGE AREA.--40.3 mi^2 (104.4 km^2).

PERIOD OF RECORD.--October 1949 to current year.

GAGE.--Water-stage recorder and concrete control. Datum of gage is 102.86 ft (31.352 m) above mean sea level (levels by Orange County Flood Control District).

AVERAGE DISCHARGE.--26 years, 3.48 ft^3/s (0.0986 m^3/s), 2,520 acre-ft/yr (3.1 hm^3/yr).

EXTREMES.--Current year: Maximum discharge, 2,000 ft^3/s (56.6 m^3/s) Dec. 4 (gage height, 6.09 ft or 1.856 m, from outside high-water mark); no flow Jan. 13.
Period of record: Maximum discharge, 6,700 ft^3/s (190 m^3/s) Feb. 24, 1969 (gage height, 11.46 ft or 3.493 m), from rating curve extended above 510 ft^3/s (14.4 m^3/s) on basis of slope-area measurements at gage heights 9.20 ft (2.804 m) and 11.46 ft (3.493 m); no flow for long periods in most years.

REMARKS.--Records fair. Pumping from wells along stream causes low-flow fluctuation in discharge.

COOPERATION.--Eleven discharge measurements furnished by Orange County Flood Control District.

DISCHARGE, IN CUBIC FEET PER SECOND, WATER YEAR OCTOBER 1974 TO SEPTEMBER 1975
MEAN VALUES

DAY	OCT	NOV	DEC	JAN	FEB	MAR	APR	MAY	JUN	JUL	AUG	SEP
1	.19	1.4	1.2	.30	.17	2.7	.85	1.3	1.2	1.8	4.2	4.4
2	.17	1.0	.37	.81	.04	2.2	.70	1.5	3.8	1.8	6.1	4.6
3	.30	.71	1.0	.15	70	2.2	3.0	1.6	2.1	2.7	4.6	7.0
4	.48	.84	461	.83	7.2	2.6	.44	.62	7.3	3.3	6.7	5.6
5	.13	1.0	13	.48	5.1	4.8	5.4	1.7	3.8	4.2	5.6	3.5
6	.09	1.0	4.6	1.0	1.4	36	15	.86	3.8	3.8	4.6	2.3
7	.60	1.2	1.6	1.4	1.2	2.7	4.6	3.2	2.4	3.0	3.8	2.9
8	.71	1.4	.13	.84	.17	264	105	.84	4.2	4.2	5.6	5.1
9	.84	.84	.17	.71	34	45	112	1.3	3.8	3.0	5.6	3.8
10	1.2	.48	.71	.38	18	121	9.4	2.7	3.8	3.0	4.2	7.4
11	1.0	1.0	1.2	.09	4.6	73	6.7	.37	4.6	4.2	3.4	4.7
12	.71	.71	1.4	.04	1.0	26	5.7	1.2	3.8	3.0	4.2	5.0
13	1.0	1.0	.71	0	1.1	6.1	3.5	.35	4.1	3.8	3.4	5.1
14	.84	.71	.48	.13	3.0	25	2.4	1.4	5.0	2.7	5.6	6.3
15	.23	1.2	.47	.15	1.6	1.2	8.7	.52	4.3	2.1	2.7	5.0
16	.48	.84	.93	.38	.17	.84	10	.98	3.4	3.4	4.2	3.6
17	.84	.84	1.6	.23	.90	1.8	19	.84	5.4	5.4	5.6	7.8
18	1.4	.38	1.1	.84	2.2	1.0	6.7	.74	4.1	6.8	4.6	3.3
19	.96	1.4	1.4	.09	2.4	2.1	2.4	1.4	3.4	5.1	3.8	3.8
20	.85	1.8	1.4	.18	2.0	1.4	3.4	.94	3.4	5.1	5.2	4.2
21	.92	1.1	1.3	.71	1.1	1.4	3.6	.64	1.4	6.7	4.3	3.4
22	.73	.58	.53	.48	.79	23	2.0	1.6	1.2	6.7	5.8	3.4
23	.93	.76	.36	.08	1.4	3.0	3.8	3.0	.71	5.1	4.0	5.6
24	.54	1.1	.44	.48	.17	2.1	2.4	2.4	1.8	4.4	3.7	4.6
25	.75	1.1	.17	.22	1.5	1.4	4.2	5.6	3.8	5.6	5.6	2.7
26	.54	1.1	.41	.51	2.0	1.6	1.2	5.1	1.4	6.1	4.7	4.6
27	.17	1.6	.98	.31	2.2	2.4	1.2	1.8	1.2	6.7	5.3	4.6
28	1.5	1.2	71	.53	1.2	2.1	1.0	1.4	1.4	5.1	4.0	5.6
29	5.6	.60	100	.72	---	.37	1.8	3.8	1.6	6.7	4.9	6.7
30	2.1	.73	1.6	4.2	---	1.2	2.4	3.0	1.6	6.1	4.3	1.8
31	2.0	---	.09	1.6	---	.59	---	5.1	---	5.1	4.4	---
TOTAL	28.80	29.62	671.35	18.87	166.61	660.80	348.49	57.80	93.81	136.7	144.7	138.4
MEAN	.93	.99	21.7	.61	5.95	21.3	11.6	1.86	3.13	4.41	4.67	4.61
MAX	5.6	1.8	461	4.2	70	264	112	5.6	7.3	6.8	6.7	7.8
MIN	.09	.38	.09	0	.04	.37	.44	.35	.71	1.8	2.7	1.8
AC-FT	57	59	1330	37	330	1310	691	115	186	271	287	275

CAL YR 1974 TOTAL 2291.05 MEAN 6.28 MAX 461 MIN .04 AC-FT 4540
WTR YR 1975 TOTAL 2495.95 MEAN 6.84 MAX 461 MIN 0 AC-FT 4950

Peak discharge (base, 300 ft^3/s)

Date	Time	G.H.	Discharge	Date	Time	G.H.	Discharge
12-4	0730	6.09	2,000	3-8	0730	4.49	890
12-29	0100	3.63	554	3-10	1530	3.59	390
2-3	1100	3.68	440	4-8	2300	4.48	870

11048500 SAN DIEGO CREEK NEAR IRVINE, CALIF.--Continued

PERIOD OF RECORD.--Water temperatures: June 1972 to current year.
Sediment records: June 1972 to current year.

EXTREMES.--Current year:
Sediment concentrations: Maximum daily, 4,880 mg/l Mar. 8; minimum daily, no flow Jan. 13.
Sediment discharge: Maximum daily, 10,200 tons (9,250 tonnes) Dec. 4; minimum daily, 0 tons (o tonnes) Jan. 12, 13, Feb. 2.
Period of record:
Sediment concentrations: Maximum daily, 9,400 mg/l Feb. 11, 1973; minimum daily, no flow Dec. 25, 1972, Nov. 15-17, 1973, Jan. 13, 1975.
Sediment discharge: Maximum daily, 22,300 tons (20,200 tonnes) Feb. 11, 1973; minimum daily, 0 tons (0 tonnes) on several days each year.

TEMPERATURE (DEG. C) OF WATER, WATER YEAR OCTOBER 1974 TO SEPTEMBER 1975
(ONCE-DAILY)

DAY	OCT	NOV	DEC	JAN	FEB	MAR	APR	MAY	JUN	JUL	AUG	SEP
1	---	---	10.5	---	---	12.0	16.0	23.0	17.5	---	20.0	---
2	---	15.0	---	9.5	---	---	---	---	23.0	29.0	---	21.0
3	---	---	12.5	---	10.5	---	---	---	21.0	27.0	---	27.5
4	---	---	13.0	---	---	15.5	14.5	---	---	---	21.0	23.0
5	---	16.0	13.5	---	13.0	---	---	---	---	---	---	---
6	---	---	12.0	---	17.5	15.5	13.0	---	---	---	20.0	21.0
7	---	13.0	---	---	---	---	---	---	16.5	23.5	---	---
8	18.5	---	---	---	---	14.5	13.0	22.0	---	---	---	---
9	---	---	---	13.0	13.5	---	14.0	---	18.5	20.0	---	---
10	15.0	---	---	---	14.0	---	---	---	27.0	29.0	---	---
11	---	---	---	---	13.5	12.0	---	16.5	---	---	---	20.0
12	22.5	14.0	---	---	---	---	14.5	---	---	22.5	---	---
13	---	---	15.5	---	---	12.0	---	---	---	---	---	19.0
14	---	12.0	9.5	---	---	---	---	---	---	---	21.0	---
15	15.0	---	---	---	---	---	15.0	---	---	---	---	---
16	---	---	---	---	---	---	---	---	18.5	---	20.0	---
17	15.5	---	---	---	---	---	14.5	---	---	30.0	23.5	28.0
18	---	---	---	9.0	---	---	---	19.5	16.5	---	---	---
19	---	11.5	9.5	---	14.0	---	---	---	---	---	---	23.0
20	18.0	---	---	---	12.0	13.0	---	17.5	---	20.5	22.5	---
21	---	14.5	9.5	---	---	---	---	23.0	20.5	---	20.0	21.5
22	16.5	---	---	---	---	---	16.0	---	---	---	---	---
23	---	---	8.0	---	---	---	---	22.0	29.0	21.0	---	---
24	---	16.0	---	13.0	---	16.5	---	---	18.0	28.0	---	---
25	---	---	---	---	16.0	---	---	---	---	---	---	---
26	---	8.5	---	10.0	---	8.0	---	---	---	20.5	---	---
27	16.5	---	---	---	---	---	13.5	---	---	---	---	---
28	---	---	9.5	---	---	9.0	23.5	19.5	18.5	25.0	23.0	---
29	15.5	10.5	8.0	---	---	---	12.5	---	---	21.5	---	---
30	---	---	11.5	8.5	---	---	---	---	---	---	18.5	---
31	14.5	---	9.0	7.0	---	---	---	---	---	---	---	---
MEAN	---	---	---	---	---	---	---	---	---	---	---	---

11048500 SAN DIEGO CREEK NEAR IRVINE, CALIF.--Continued

SUSPENDED-SEDIMENT DISCHARGE (TONS/DAY), WATER YEAR OCTOBER 1974 TO SEPTEMBER 1975

	OCTOBER			NOVEMBER			DECEMBER		
DAY	MEAN DISCHARGE (CFS)	MEAN CONCEN-TRATION (MG/L)	SEDIMENT DISCHARGE (TONS/DAY)	MEAN DISCHARGE (CFS)	MEAN CONCEN-TRATION (MG/L)	SEDIMENT DISCHARGE (TONS/DAY)	MEAN DISCHARGE (CFS)	MEAN CONCEN-TRATION (MG/L)	SEDIMENT DISCHARGE (TONS/DAY)
1	.19	70	.04	1.4	220	.83	1.2	150	.49
2	.17	60	.03	1.0	150	.41	.37	50	.05
3	.30	90	.07	.71	140	.27	1.0	200	.54
4	.48	120	.16	.84	160	.36	461	3990	10200
5	.13	70	.02	1.0	190	.51	13	620	22
6	.09	50	.01	1.0	200	.54	4.6	305	3.8
7	.60	140	.23	1.2	450	1.5	1.6	120	.52
8	.71	300	.58	1.4	780	2.9	.13	50	.02
9	.84	510	1.2	.84	280	.64	.17	25	.01
10	1.2	720	2.3	.48	150	.19	.71	60	.12
11	1.0	470	1.3	1.0	320	.86	1.2	140	.45
12	.71	360	.69	.71	210	.40	1.4	250	.95
13	1.0	520	1.4	1.0	330	.89	.71	100	.19
14	.84	690	1.6	.71	240	.46	.48	50	.06
15	.23	840	.52	1.2	350	1.1	.47	30	.04
16	.48	1000	.13	.84	190	.43	.93	90	.23
17	.84	1030	2.3	.84	110	.25	1.6	290	1.3
18	1.4	1080	4.1	.38	70	.07	1.1	200	.59
19	.96	1050	2.7	1.4	660	2.5	1.4	410	1.6
20	.85	1010	2.3	1.8	840	4.1	1.4	310	1.2
21	.92	860	2.1	1.1	250	.74	1.3	150	.53
22	.73	640	1.3	.58	110	.17	.53	130	.19
23	.93	840	2.1	.76	110	.23	.36	110	.11
24	.54	450	.66	1.1	150	.45	.44	80	.10
25	.75	600	1.2	1.1	160	.48	.17	55	.03
26	.54	320	.47	1.1	270	.80	.41	75	.08
27	.17	180	.08	1.6	580	2.5	.98	360	.95
28	1.5	400	1.6	1.2	160	.52	71	1920	800
29	5.6	900	14	.60	60	.10	100	2740	1880
30	2.1	520	2.9	.73	90	.18	1.6	360	1.6
31	2.0	310	1.7	---	---	---	.09	30	.01
TOTAL	28.80	---	49.79	29.62	---	25.38	671.35	---	12917.76

	JANUARY			FEBRUARY			MARCH		
DAY	MEAN DISCHARGE (CFS)	MEAN CONCEN-TRATION (MG/L)	SEDIMENT DISCHARGE (TONS/DAY)	MEAN DISCHARGE (CFS)	MEAN CONCEN-TRATION (MG/L)	SEDIMENT DISCHARGE (TONS/DAY)	MEAN DISCHARGE (CFS)	MEAN CONCEN-TRATION (MG/L)	SEDIMENT DISCHARGE (TONS/DAY)
1	.30	25	.02	.17	110	.05	2.7	300	2.2
2	.81	85	.19	.04	35	0	2.2	210	1.2
3	.15	25	.01	70	2590	1430	2.2	150	.89
4	.83	110	.25	7.2	510	9.9	2.6	200	1.4
5	.48	60	.08	5.1	420	5.8	4.8	460	6.0
6	1.0	140	.38	1.4	240	.91	36	1300	238
7	1.4	390	1.5	1.2	200	.65	2.7	270	2.0
8	.84	230	.52	.17	90	.04	264	4880	6090
9	.71	120	.23	34	1380	189	45	700	109
10	.38	60	.06	18	660	32	121	1960	640
11	.09	30	.01	4.6	460	5.7	73	1460	323
12	.04	20	0	1.0	110	.30	26	800	56
13	0	0	0	1.1	100	.30	6.1	410	6.8
14	.13	20	.01	3.0	250	2.0	25	640	79
15	.15	55	.02	1.6	160	.69	1.2	200	.65
16	.38	200	.21	.17	100	.05	.84	90	.20
17	.23	140	.09	.90	100	.24	1.8	180	.87
18	.84	320	.73	2.2	220	1.3	1.0	100	.27
19	.09	85	.02	2.4	260	1.7	2.1	210	1.2
20	.18	30	.01	2.0	190	1.0	1.4	140	.53
21	.71	280	.54	1.1	120	.36	1.4	120	.45
22	.48	200	.26	.79	80	.17	23	600	63
23	.08	300	.06	1.4	140	.53	3.0	430	3.5
24	.48	120	.16	.17	50	.02	2.1	240	1.4
25	.22	50	.03	1.5	160	.65	1.4	150	.57
26	.51	300	.41	2.0	200	1.1	1.6	190	.82
27	.31	95	.08	2.2	250	1.5	2.4	270	1.8
28	.53	140	.20	1.2	140	.45	2.1	130	.74
29	.72	190	.37	---	---	---	.37	55	.06
30	4.2	1000	11	---	---	---	1.2	130	.42
31	1.6	250	1.1	---	---	---	.59	100	.16
TOTAL	18.87	---	18.55	166.61	---	1686.41	660.80	---	7632.13

11048500 SAN DIEGO CREEK NEAR IRVINE, CALIF.--Continued

SUSPENDED-SEDIMENT DISCHARGE (TONS/DAY), WATER YEAR OCTOBER 1974 TO SEPTEMBER 1975

	APRIL			MAY			JUNE		
DAY	MEAN DISCHARGE (CFS)	MEAN CONCEN-TRATION (MG/L)	SEDIMENT DISCHARGE (TONS/DAY)	MEAN DISCHARGE (CFS)	MEAN CONCEN-TRATION (MG/L)	SEDIMENT DISCHARGE (TONS/DAY)	MEAN DISCHARGE (CFS)	MEAN CONCEN-TRATION (MG/L)	SEDIMENT DISCHARGE (TONS/DAY)
1	.85	130	.30	1.3	70	.25	1.2	50	.16
2	.70	80	.15	1.5	80	.32	3.8	440	4.5
3	3.0	160	1.3	1.6	90	.39	2.1	380	2.2
4	.44	60	.07	.62	30	.05	7.3	2000	39
5	5.4	265	14	1.7	90	.41	3.8	1500	15
6	15	600	24	.86	50	.12	3.8	900	9.2
7	4.6	290	3.6	3.2	860	7.4	2.4	580	3.8
8	105	1030	1790	.84	680	1.5	4.2	1200	14
9	112	2040	1630	1.3	380	1.3	3.8	700	7.2
10	9.4	940	24	2.7	620	4.5	3.8	390	4.0
11	6.7	350	6.3	.37	360	.36	4.6	620	7.7
12	5.7	150	2.3	1.2	200	.65	3.8	440	4.5
13	3.5	110	1.0	.35	110	.10	4.1	660	7.3
14	2.4	80	.52	1.4	65	.25	5.0	1000	13
15	8.7	480	11	.52	30	.04	4.3	920	11
16	10	620	17	.98	360	.95	3.4	820	7.5
17	19	760	39	.84	290	.66	5.4	1600	23
18	6.7	300	5.4	.74	240	.48	4.1	1300	14
19	2.4	120	.78	1.4	380	1.4	3.4	1100	10
20	3.4	160	1.5	.94	210	.53	3.4	960	8.8
21	3.6	200	1.9	.64	120	.21	1.4	840	3.2
22	2.0	90	.49	1.6	210	.91	1.2	540	1.8
23	3.8	200	2.1	3.0	460	3.7	.71	350	.67
24	2.4	110	.71	2.4	350	2.3	1.8	720	3.5
25	4.2	250	2.8	5.6	2000	30	3.8	1300	13
26	1.2	140	.45	5.1	1500	21	1.4	760	2.9
27	1.2	85	.28	1.8	1200	5.8	1.2	500	1.6
28	1.0	95	.26	1.4	980	3.7	1.4	620	2.3
29	1.8	110	.53	3.8	60	.62	1.6	700	3.0
30	2.4	140	.91	3.0	180	1.5	1.6	760	3.3
31	---	---	---	5.1	270	3.7	---	---	---
TOTAL	348.49	---	3582.65	57.80	---	95.10	93.81	---	241.13

	JULY			AUGUST			SEPTEMBER		
DAY	MEAN DISCHARGE (CFS)	MEAN CONCEN-TRATION (MG/L)	SEDIMENT DISCHARGE (TONS/DAY)	MEAN DISCHARGE (CFS)	MEAN CONCEN-TRATION (MG/L)	SEDIMENT DISCHARGE (TONS/DAY)	MEAN DISCHARGE (CFS)	MEAN CONCEN-TRATION (MG/L)	SEDIMENT DISCHARGE (TONS/DAY)
1	1.8	780	3.8	4.2	1500	17	4.4	400	4.8
2	1.8	800	3.9	6.1	1700	28	4.6	340	4.2
3	2.7	1400	10	4.6	980	12	7.0	1700	32
4	3.3	1900	17	6.7	2500	45	5.6	1100	17
5	4.2	3000	34	5.6	2000	30	3.5	640	6.0
6	3.8	1500	15	4.6	1600	20	2.3	310	1.9
7	3.0	800	6.5	3.8	1300	13	2.9	400	3.1
8	4.2	3000	34	5.6	3400	51	5.1	520	7.2
9	3.0	2200	18	5.6	3300	50	3.8	340	3.5
10	3.0	1700	14	4.2	2200	25	7.4	640	13
11	4.2	3000	34	3.4	1500	14	4.7	380	4.8
12	3.0	1800	15	4.2	2200	25	5.0	310	4.2
13	3.8	2700	28	3.4	2000	18	5.1	280	3.9
14	2.7	1200	8.7	5.6	3000	45	6.3	700	12
15	2.1	500	2.8	2.7	2000	15	5.0	470	6.3
16	3.4	660	6.1	4.2	2200	25	3.6	360	3.5
17	5.4	880	13	5.6	2500	38	7.8	1500	32
18	6.8	1300	24	4.6	1400	17	3.3	300	2.7
19	5.1	2200	30	3.8	860	8.8	3.8	370	3.8
20	5.1	2900	40	5.2	1100	15	4.2	460	5.2
21	6.7	3600	65	4.3	1000	12	3.4	370	3.4
22	6.7	3600	65	5.8	1200	19	3.4	340	3.1
23	5.1	2700	37	4.0	680	7.3	5.6	800	12
24	4.4	1900	23	3.7	340	3.4	4.6	680	8.4
25	5.6	2300	35	5.6	660	10	2.7	600	4.4
26	6.1	2900	48	4.7	520	6.6	4.6	640	7.9
27	6.7	3600	65	5.3	620	8.9	4.6	700	8.7
28	5.1	2500	34	4.0	440	4.8	5.6	780	12
29	6.7	3600	65	4.9	620	8.2	6.7	840	15
30	6.1	2900	48	4.3	540	6.3	1.8	540	2.6
31	5.1	1900	26	4.4	470	5.6	---	---	---
TOTAL	136.7	---	868.8	144.7	---	603.9	138.4	---	248.6
YEAR	2495.95		27970.20						

11048500 SAN DIEGO CREEK NEAR IRVINE, CALIF.--Continued

SUMMARY OF WATER AND SEDIMENT DISCHARGE, WATER YEAR OCTOBER 1974 TO SEPTEMBER 1975

MONTH	WATER DISCHARGE CFS-DAYS	SUSPENDED SEDIMENT DISCHARGE TONS	BEDLOAD DISCHARGE TONS	TOTAL SEDIMENT DISCHARGE TONS
OCTOBER 1974	28.80	50.96	26	77
NOVEMBER ...	29.62	25.38	14	39
DECEMBER ...	671.35	12917.76	5090	18000
JANUARY 1975	18.87	18.55	13	32
FEBRUARY ...	166.61	1686.41	1080	2760
MARCH	660.80	7632.13	5400	13000
APRIL	348.49	3582.65	2510	6090
MAY	57.80	95.10	77	172
JUNE	93.81	241.13	165	406
JULY	136.70	868.80	310	1180
AUGUST	144.70	603.90	325	929
SEPTEMBER ..	138.40	248.60	320	569
TOTAL	2495.95	27971.37	15330	43254

PARTICLE-SIZE DISTRIBUTION OF SUSPENDED SEDIMENT, WATER YEAR OCTOBER 1974 TO SEPTEMBER 1975

DATE	TIME	TEMPERATURE (DEG C)	INSTANTANEOUS DISCHARGE (CFS)	SUSPENDED SEDIMENT (MG/L)	SUSPENDED SEDIMENT DISCHARGE (T/DAY)	SUS. SED. FALL DIAM. % FINER THAN .002 MM	SUS. SED. FALL DIAM. % FINER THAN .004 MM	SUS. SED. FALL DIAM. % FINER THAN .008 MM	SUS. SED. FALL DIAM. % FINER THAN .016 MM	SUS. SED. FALL DIAM. % FINER THAN .031 MM
OCT.										
08...	0920	18.0	.59	305	.49	47	55	62	69	75
29...	1020	15.5	7.3	1010	20	34	35	42	51	64
DEC.										
04...	1000	13.0	1500	7220	29200	42	43	48	58	66
04...	1200	13.0	1100	6160	18300	42	43	50	60	65
28...	0805	9.5	70	3420	646	53	56	64	78	83
29...	1025	9.5	51	2150	296	35	37	41	44	51
FEB.										
10...	1305	17.0	12	636	21	50	56	61	66	71
MAR.										
08...	1220	14.5	145	4300	1680	38	42	47	51	56
08...	1410	14.0	700	11700	22100	25	28	30	35	41
08...	1540	15.0	510	5510	7590	30	32	36	40	47
11...	1040	12.0	105	2030	576	32	33	36	40	44
13...	1245	12.0	2.4	278	1.8	--	--	--	--	--
APR.										
09...	1100	14.0	42	1360	154	--	--	--	--	--
JUNE										
23...	1300	29.0	.84	350	.79	68	78	89	95	98
SEP.										
11...	1125	20.0	5.1	385	5.3	44	49	56	62	69
25...	1235	--	1.0	622	1.7	73	86	93	97	99

11048500 SAN DIEGO CREEK NEAR IRVINE, CALIF.--Continued

PARTICLE-SIZE DISTRIBUTION OF SUSPENDED SEDIMENT, WATER YEAR OCTOBER 1974 TO SEPTEMBER 1975

DATE	SUS. SED. FALL DIAM. % FINER THAN .062 MM	SUS. SED. SIEVE DIAM. % FINER THAN .062 MM	SUS. SED. FALL DIAM. % FINER THAN .125 MM	SUS. SED. SIEVE DIAM. % FINER THAN .125 MM	SUS. SED. FALL DIAM. % FINER THAN .250 MM	SUS. SED. SIEVE DIAM. % FINER THAN .250 MM	SUS. SED. FALL DIAM. % FINER THAN .500 MM	SUS. SED. SIEVE DIAM. % FINER THAN .500 MM	SUS. SED. FALL DIAM. % FINER THAN 1.00 MM	SUS. SED. SIEVE DIAM. % FINER THAN 1.00 MM
OCT.										
08...	--	84	--	96	--	99	--	100	--	--
29...	--	82	--	96	--	100	--	--	--	--
DEC.										
04...	77	--	89	--	97	--	100	--	--	--
04...	74	--	85	--	94	--	100	--	--	--
28...	90	--	96	--	100	--	--	--	--	--
29...	59	--	75	--	95	--	100	--	--	--
FEB.										
10...	--	75	--	89	--	98	--	100	--	--
MAR.										
08...	62	--	76	--	95	--	99	--	100	--
08...	50	--	64	--	82	--	95	--	100	--
08...	54	--	67	--	85	--	97	--	100	--
11...	52	--	67	--	92	--	100	--	--	--
13...	--	96	--	98	--	99	--	100	--	--
APR.										
09...	--	52	--	66	--	86	--	98	--	100
JUNE										
23...	--	99	--	100	--	--	--	--	--	--
SEP.										
11...	--	75	--	93	--	99	--	100	--	--
25...	--	99	--	100	--	--	--	--	--	--

11048530 EL MODENA-IRVINE CHANNEL NEAR IRVINE, CALIF.

LOCATION.--Lat 33°42'49", long 117°48'01", in Lomas Santiago Grant, Orange County, on downstream side of county road bridge, 50 ft (30 m) west of intersection of Myford Road and Walnut Avenue, 0.5 mi (0.8 km) southwest of Interstate 5.

PERIOD OF RECORD.--October 1974 to September 1975.

GAGE.--Water-stage recorder. Altitude of gage is 60 ft (19 m), from topographic map.

EXTREMES.--Current year: Maximum discharge, 1,040 ft^3/s (29.5 m^3/s) Dec. 4 (gage height, 8.40 ft or 2.560 m); minimum daily, 0.20 ft^3/s (0.006 m^3/s) Feb. 6, 7, 11-17.

REMARKS.--Records good.

COOPERATION.--Records of discharge furnished by Orange County Flood Control District and reviewed by the Geological Survey.

DISCHARGE, IN CUBIC FEET PER SECOND, WATER YEAR OCTOBER 1974 TO SEPTEMBER 1975
MEAN VALUES

DAY	OCT	NOV	DEC	JAN	FEB	MAR	APR	MAY	JUN	JUL	AUG	SEP
1	.70	.70	.70	.60	.50	.70	1.9	.60	2.0	1.1	1.5	2.0
2	.60	.60	.90	.60	.40	.70	1.3	.50	1.9	1.1	1.6	2.1
3	.50	.60	.60	.60	40	.50	1.3	1.7	1.6	1.6	2.4	2.1
4	.70	.90	136	.90	8.4	.70	1.6	1.6	1.6	1.9	1.5	1.7
5	.90	1.1	.90	.90	2.6	7.0	12	1.9	1.6	1.8	1.0	.90
6	.90	1.4	.90	.80	.20	17	7.8	1.0	1.6	2.1	1.2	.90
7	3.7	.90	.60	1.2	.20	4.8	1.5	1.0	1.5	2.1	1.3	1.4
8	1.1	.70	.60	1.1	.30	64	41	.90	1.3	1.8	.80	1.6
9	1.2	.90	.60	1.1	18	.30	16	.70	1.7	1.6	.80	1.3
10	.90	1.0	.60	1.5	.40	45	.70	.80	2.1	.90	.90	1.3
11	1.0	1.2	.50	1.5	.20	5.1	.70	.80	2.2	1.0	.90	1.3
12	1.2	1.9	.90	1.2	.20	1.1	.70	.60	1.5	.90	1.0	1.1
13	1.2	1.2	1.1	1.2	.20	1.1	.60	.60	1.5	1.2	.90	1.0
14	1.4	1.1	1.2	1.2	.20	18	.60	.90	1.4	1.2	1.1	1.7
15	1.0	1.5	1.2	1.0	.20	1.2	1.5	1.5	1.1	1.1	1.4	1.8
16	1.4	1.2	1.6	1.0	.20	1.3	.70	2.1	1.4	1.2	1.5	1.6
17	1.8	1.4	1.6	1.2	.20	1.1	3.1	2.0	1.9	1.5	1.7	1.0
18	1.4	1.2	1.3	1.5	.30	2.0	.80	2.1	1.9	1.3	1.5	1.5
19	.90	1.4	1.2	1.1	.60	1.9	.80	1.8	1.8	1.2	1.0	2.0
20	1.5	.80	1.0	1.0	.40	1.7	.60	1.9	1.8	1.2	1.0	2.4
21	.50	.70	1.3	1.0	.40	2.0	.50	1.7	1.8	1.1	1.0	2.7
22	.80	.90	1.2	1.7	.70	19	.40	1.3	2.2	1.0	1.0	2.4
23	.90	.60	1.1	1.1	1.0	1.1	.40	1.3	1.7	1.0	.80	2.2
24	.90	.50	1.5	1.0	.90	1.0	.50	1.8	1.8	1.2	.90	1.7
25	.90	.50	1.4	.70	.80	1.1	3.9	1.9	2.1	1.2	1.2	1.8
26	1.2	1.2	.90	.70	.90	1.0	.60	1.9	2.1	1.7	1.4	2.0
27	.80	1.0	.90	.60	1.1	1.4	.60	1.9	1.1	1.9	1.5	1.9
28	4.0	.50	45	.50	1.4	1.2	.60	1.7	.90	1.9	1.5	1.7
29	7.3	.60	24	.50	---	1.2	.60	1.8	.90	1.9	1.6	1.6
30	1.4	.70	.60	6.8	---	1.5	.50	2.0	.90	1.9	1.1	1.3
31	1.1	---	.80	.70	---	1.5	---	2.5	---	1.5	2.0	---
TOTAL	43.80	28.90	232.70	36.50	80.90	207.20	103.80	44.80	48.90	44.10	39.00	50.00
MEAN	1.41	.96	7.51	1.18	2.89	6.68	3.46	1.45	1.63	1.42	1.26	1.67
MAX	7.3	1.9	136	6.8	40	64	41	2.5	2.2	2.1	2.4	2.7
MIN	.50	.50	.50	.50	.20	.30	.40	.50	.90	.90	.80	.90
AC-FT	87	57	462	72	160	411	206	89	97	87	77	99

WTR YR 1975 TOTAL 960.60 MEAN 2.63 MAX 136 MIN .20 AC-FT 1910

11048530 EL MODENA IRVINE CHANNEL NEAR IRVINE, CALIF.

LOCATION.--Lat 33°42'49", long 117°48'01", on line between secs.45 and 63 in Lomas Santiago Grant, Orange County, on downstream side of county road bridge 50 ft (30 m) west of intersection of Myford Road and Walnut Avenue, and 0.5 mi (0.8 km) southwest of U.S. Interstate Highway 5.

DRAINAGE AREA.--11.9 mi^2 (30.8 km^2).

PERIOD OF RECORD.--Water temperatures: October 1974 to September 1975.
Sediment records: October 1974 to September 1975.

EXTREMES.--Current year:
Sediment concentrations: Maximum daily, 3,230 mg/l Dec. 4; minimum daily, 15 mg/l Apr. 30, May 1, 6, 7.
Sediment discharge: Maximum daily, 3,050 tons (2,770 tonnes) Dec. 4; minimum daily, 0.01 ton (0.01 tonne) Feb. 11-17.

REMARKS.--Records of discharge furnished by Orange County Environmental Management Agency.

TEMPERATURE (DEG. C) OF WATER, WATER YEAR OCTOBER 1974 TO SEPTEMBER 1975
ONCE-DAILY

DAY	OCT	NOV	DEC	JAN	FEB	MAR	APR	MAY	JUN	JUL	AUG	SEP
1	---	---	---	---	10.5	14.0	22.5	---	18.5	---	21.0	---
2	---	---	---	13.5	---	---	---	---	25.5	28.5	---	21.0
3	---	---	---	10.5	10.5	---	---	---	22.5	30.0	---	28.0
4	---	---	13.0	---	---	16.5	15.0	---	---	---	29.0	27.5
5	---	---	13.5	9.0	14.0	---	---	---	---	---	---	---
6	---	---	17.0	---	18.0	14.5	13.5	25.0	---	---	21.0	22.0
7	---	15.0	---	---	---	---	---	---	20.0	21.5	---	---
8	---	---	11.5	---	14.0	15.5	---	25.0	---	---	---	---
9	---	---	---	14.5	13.0	14.0	16.0	18.0	21.0	20.5	---	---
10	21.0	---	---	---	15.0	---	---	---	29.5	32.0	---	---
11	---	---	---	---	13.5	11.5	---	18.0	---	---	---	21.5
12	---	---	---	16.0	---	---	17.5	---	---	23.0	---	---
13	---	---	18.0	---	---	---	---	---	---	---	---	19.5
14	---	16.0	11.5	---	---	---	---	---	---	---	24.5	---
15	---	---	11.5	17.5	---	---	15.0	24.0	---	---	---	---
16	---	---	---	---	---	---	---	---	19.5	---	21.5	---
17	19.0	---	---	18.5	14.5	---	14.0	---	---	31.0	24.0	30.0
18	---	---	---	12.0	---	---	---	24.5	17.0	---	---	---
19	---	---	11.0	10.5	15.5	---	---	---	---	---	---	---
20	---	---	---	---	14.5	16.0	---	18.0	---	22.0	25.0	---
21	---	16.5	12.5	---	---	---	---	23.0	18.5	---	22.5	22.0
22	19.5	---	---	---	10.0	---	16.5	---	---	---	---	---
23	---	---	---	---	---	---	---	23.5	23.5	20.5	---	---
24	---	---	---	---	---	19.5	---	---	17.5	29.0	---	---
25	---	---	---	---	21.0	---	---	---	---	---	---	---
26	---	---	---	14.0	---	9.0	---	---	---	20.5	---	---
27	---	---	11.5	---	---	---	16.5	---	---	---	---	---
28	---	---	10.5	---	---	10.0	25.0	22.0	19.5	27.5	24.5	---
29	15.0	14.0	9.0	---	---	---	19.0	---	---	21.0	---	---
30	---	---	13.0	9.5	---	---	---	---	---	---	18.5	---
31	---	---	10.5	8.5	---	---	---	---	---	---	---	---
MONTH	---	---	---	---	---	---	---	---	---	---	---	---

11048530 EL MODENA IRVINE CHANNEL NEAR IRVINE, CALIF.--Continued

SUSPENDED-SEDIMENT DISCHARGE (TONS/DAY), WATER YEAR OCTOBER 1974 TO SEPTEMBER 1975

	OCTOBER			NOVEMBER			DECEMBER		
DAY	MEAN DISCHARGE (CFS)	MEAN CONCEN-TRATION (MG/L)	SEDIMENT DISCHARGE (TONS/DAY)	MEAN DISCHARGE (CFS)	MEAN CONCEN-TRATION (MG/L)	SEDIMENT DISCHARGE (TONS/DAY)	MEAN DISCHARGE (CFS)	MEAN CONCEN-TRATION (MG/L)	SEDIMENT DISCHARGE (TONS/DAY)
1	.70	145	.27	.70	80	.15	.70	110	.21
2	.60	135	.22	.60	65	.11	.90	100	.24
3	.50	130	.18	.60	65	.11	.60	95	.15
4	.70	120	.23	.90	70	.17	136	3230	3050
5	.90	110	.27	1.1	85	.25	.90	140	.34
6	.90	140	.34	1.4	100	.38	.90	75	.18
7	3.7	185	5.4	.90	70	.17	.60	50	.08
8	1.1	160	.48	.70	50	.09	.60	30	.05
9	1.2	150	.49	.90	70	.17	.60	25	.04
10	.90	140	.34	1.0	90	.24	.60	20	.03
11	1.0	135	.36	1.2	130	.42	.50	20	.03
12	1.2	130	.42	1.9	150	.77	.90	30	.07
13	1.2	125	.41	1.2	130	.42	1.1	90	.27
14	1.4	120	.45	1.1	115	.34	1.2	130	.42
15	1.0	115	.31	1.5	110	.45	1.2	180	.58
16	1.4	110	.42	1.2	110	.36	1.6	175	.76
17	1.8	105	.51	1.4	105	.40	1.6	160	.69
18	1.4	100	.38	1.2	115	.37	1.3	150	.53
19	.90	95	.23	1.4	115	.43	1.2	130	.42
20	1.5	90	.36	.80	100	.22	1.0	100	.27
21	.50	120	.16	.70	80	.15	1.3	110	.39
22	.80	140	.30	.90	85	.21	1.2	90	.29
23	.90	130	.32	.60	80	.13	1.1	70	.21
24	.90	110	.27	.50	60	.08	1.5	80	.32
25	.90	100	.24	.50	55	.07	1.4	60	.23
26	1.2	100	.32	1.2	110	.36	.90	40	.10
27	.80	120	.26	1.0	90	.24	.90	30	.07
28	4.0	165	5.6	.50	70	.09	45	765	245
29	7.3	225	12	.60	90	.15	24	385	89
30	1.4	140	.53	.70	100	.19	.60	40	.06
31	1.1	100	.30	---	---	---	.80	140	.30
TOTAL	43.80	---	32.37	28.90	---	7.69	232.70	---	3391.33

	JANUARY			FEBRUARY			MARCH		
DAY	MEAN DISCHARGE (CFS)	MEAN CONCEN-TRATION (MG/L)	SEDIMENT DISCHARGE (TONS/DAY)	MEAN DISCHARGE (CFS)	MEAN CONCEN-TRATION (MG/L)	SEDIMENT DISCHARGE (TONS/DAY)	MEAN DISCHARGE (CFS)	MEAN CONCEN-TRATION (MG/L)	SEDIMENT DISCHARGE (TONS/DAY)
1	.60	120	.19	.50	55	.07	.70	50	.09
2	.60	110	.18	.40	50	.05	.70	30	.06
3	.60	105	.17	40	1040	250	.50	30	.04
4	.90	110	.27	8.4	305	20	.70	40	.08
5	.90	120	.29	2.6	100	2.8	7.0	320	34
6	.80	110	.24	.20	50	.03	17	640	111
7	1.2	85	.28	.20	30	.02	4.8	440	15
8	1.1	65	.19	.30	90	.07	64	1250	553
9	1.1	65	.19	18	280	27	.30	40	.03
10	1.5	75	.30	.40	65	.07	45	940	281
11	1.5	90	.36	.20	25	.01	5.1	335	7.2
12	1.2	100	.32	.20	25	.01	1.1	65	.19
13	1.2	105	.34	.20	20	.01	1.1	30	.09
14	1.2	115	.37	.20	20	.01	18	450	107
15	1.0	110	.30	.20	20	.01	1.2	50	.16
16	1.0	100	.27	.20	25	.01	1.3	25	.09
17	1.2	90	.29	.20	25	.01	1.1	20	.06
18	1.5	130	.53	.30	50	.04	2.0	60	.32
19	1.1	150	.45	.60	80	.13	1.9	55	.28
20	1.0	140	.38	.40	45	.05	1.7	50	.23
21	1.0	110	.30	.40	30	.03	2.0	60	.32
22	1.7	125	.57	.70	45	.09	19	450	90
23	1.1	140	.42	1.0	100	.27	1.1	75	.22
24	1.0	135	.36	.90	105	.26	1.0	35	.09
25	.70	115	.22	.80	95	.21	1.1	30	.09
26	.70	100	.19	.90	90	.22	1.0	30	.08
27	.60	90	.15	1.1	130	.39	1.4	55	.21
28	.50	80	.11	1.4	180	.68	1.2	55	.18
29	.50	75	.10	---	---	---	1.2	50	.16
30	6.8	165	6.1	---	---	---	1.5	55	.22
31	.70	65	.12	---	---	---	1.5	60	.24
TOTAL	36.50	---	14.55	80.90	---	302.55	207.20	---	1201.73

11048530 EL MODENA IRVINE CHANNEL NEAR IRVINE, CALIF.--Continued

SUSPENDED-SEDIMENT DISCHARGE (TONS/DAY), WATER YEAR OCTOBER 1974 TO SEPTEMBER 1975

	APRIL			MAY			JUNE		
DAY	MEAN DISCHARGE (CFS)	MEAN CONCEN-TRATION (MG/L)	SEDIMENT DISCHARGE (TONS/DAY)	MEAN DISCHARGE (CFS)	MEAN CONCEN-TRATION (MG/L)	SEDIMENT DISCHARGE (TONS/DAY)	MEAN DISCHARGE (CFS)	MEAN CONCEN-TRATION (MG/L)	SEDIMENT DISCHARGE (TONS/DAY)
1	1.9	30	.15	.60	15	.02	2.0	110	.59
2	1.3	25	.09	.50	20	.03	1.9	140	.72
3	1.3	25	.09	1.7	35	.16	1.6	160	.69
4	1.6	130	.56	1.6	25	.11	1.6	170	.73
5	12	320	36	1.9	20	.10	1.6	180	.78
6	7.8	310	9.5	1.0	15	.04	1.6	210	.91
7	1.5	40	.16	1.0	15	.04	1.5	320	1.3
8	41	710	298	.90	90	.22	1.3	180	.63
9	16	380	63	.70	130	.25	1.7	150	.69
10	.70	140	.26	.80	140	.30	2.1	130	.74
11	.70	70	.13	.80	145	.31	2.2	125	.74
12	.70	40	.08	.60	150	.24	1.5	120	.49
13	.60	25	.04	.60	155	.25	1.5	115	.47
14	.60	20	.03	.90	170	.41	1.4	110	.42
15	1.5	40	.16	1.5	1300	5.3	1.1	140	.42
16	.70	25	.05	2.1	900	5.1	1.4	180	.68
17	3.1	100	1.6	2.0	600	3.2	1.9	220	1.1
18	.80	65	.14	2.1	400	2.3	1.9	250	1.3
19	.80	45	.10	1.8	270	1.3	1.8	260	1.3
20	.60	35	.06	1.9	170	.87	1.8	250	1.2
21	.50	30	.04	1.7	180	.83	1.8	240	1.2
22	.40	25	.03	1.3	175	.61	2.2	220	1.3
23	.40	20	.02	1.3	160	.56	1.7	180	.83
24	.50	30	.04	1.8	150	.73	1.8	150	.73
25	3.9	147	4.2	1.9	140	.72	2.1	140	.79
26	.60	40	.06	1.9	150	.77	2.1	150	.85
27	.60	25	.04	1.9	155	.80	1.1	155	.46
28	.60	20	.03	1.7	150	.69	.90	140	.34
29	.60	15	.02	1.8	170	.83	.90	100	.24
30	.50	15	.02	2.0	200	1.1	.90	65	.16
31	---	---	---	2.5	220	1.5	---	---	---
TOTAL	103.80	---	414.70	44.80	---	29.69	48.90	---	22.80

	JULY			AUGUST			SEPTEMBER		
DAY	MEAN DISCHARGE (CFS)	MEAN CONCEN-TRATION (MG/L)	SEDIMENT DISCHARGE (TONS/DAY)	MEAN DISCHARGE (CFS)	MEAN CONCEN-TRATION (MG/L)	SEDIMENT DISCHARGE (TONS/DAY)	MEAN DISCHARGE (CFS)	MEAN CONCEN-TRATION (MG/L)	SEDIMENT DISCHARGE (TONS/DAY)
1	1.1	50	.15	1.5	85	.34	2.0	270	1.5
2	1.1	50	.15	1.6	80	.35	2.1	260	1.5
3	1.6	75	.32	2.4	90	.58	2.1	150	.85
4	1.9	150	.77	1.5	150	.61	1.7	130	.60
5	1.8	210	1.0	1.0	200	.54	.90	120	.29
6	2.1	190	1.1	1.2	170	.55	.90	180	.44
7	2.1	170	.96	1.3	140	.49	1.4	210	.79
8	1.8	210	1.0	.80	120	.26	1.6	210	.91
9	1.6	200	.86	.80	105	.23	1.3	160	.56
10	.90	150	.36	.90	95	.23	1.3	110	.39
11	1.0	140	.38	.90	95	.23	1.3	80	.28
12	.90	180	.44	1.0	110	.30	1.1	75	.22
13	1.2	180	.58	.90	135	.33	1.0	90	.24
14	1.2	175	.57	1.1	130	.39	1.7	120	.55
15	1.1	160	.48	1.4	110	.42	1.8	120	.58
16	1.2	150	.49	1.5	95	.38	1.6	110	.48
17	1.5	140	.57	1.7	130	.60	1.0	70	.19
18	1.3	160	.56	1.5	125	.51	1.5	70	.28
19	1.2	180	.58	1.0	110	.30	2.0	170	.92
20	1.2	190	.62	1.0	95	.26	2.4	240	1.6
21	1.1	170	.50	1.0	115	.31	2.7	220	1.6
22	1.0	140	.38	1.0	110	.30	2.4	170	1.1
23	1.0	140	.38	.80	90	.19	2.2	160	.95
24	1.2	145	.47	.90	90	.22	1.7	170	.78
25	1.2	150	.49	1.2	110	.36	1.8	200	.97
26	1.7	150	.69	1.4	130	.49	2.0	200	1.1
27	1.9	145	.74	1.5	160	.65	1.9	180	.92
28	1.9	140	.72	1.5	160	.65	1.7	160	.73
29	1.9	130	.67	1.6	145	.63	1.6	140	.60
30	1.9	120	.62	1.1	190	.56	1.3	130	.46
31	1.5	100	.41	2.0	260	1.4	---	---	---
TOTAL	44.10	---	18.01	39.00	---	13.66	50.00	---	22.38
YEAR	960.60		5471.46						

11048530 EL MODENA IRVINE CHANNEL NEAR IRVINE, CALIF.--Continued

SUMMARY OF WATER AND SEDIMENT DISCHARGE, WATER YEAR OCTOBER 1974 TO SEPTEMBER 1975

MONTH	WATER DISCHARGE CFS-DAYS	SUSPENDED SEDIMENT DISCHARGE TONS	BEDLOAD DISCHARGE TONS	TOTAL SEDIMENT DISCHARGE TONS
OCTOBER 1974	43.80	32.37	0	32
NOVEMBER ...	28.90	7.69	0	8
DECEMBER ...	232.70	3391.33	357	3750
JANUARY 1975	36.50	14.55	0	15
FEBRUARY ...	80.90	302.55	16	319
MARCH	207.20	1201.73	81	1280
APRIL	103.80	414.70	17	432
MAY	44.80	29.69	0	30
JUNE	48.90	22.80	0	23
JULY	44.10	18.01	0	18
AUGUST	39.00	13.66	0	14
SEPTEMBER ..	50.00	22.38	0	22
TOTAL	960.60	5471.46	471	5943

PARTICLE-SIZE DISTRIBUTION OF SUSPENDED SEDIMENT, WATER YEAR OCTOBER 1974 TO SEPTEMBER 1975

DATE	TIME	TEMPERATURE (DEG C)	INSTANTANEOUS DISCHARGE (CFS)	SUSPENDED SEDIMENT (MG/L)	SUSPENDED SEDIMENT DISCHARGE (T/DAY)	SUS. SED. FALL DIAM. % FINER THAN .002 MM	SUS. SED. FALL DIAM. % FINER THAN .004 MM	SUS. SED. FALL DIAM. % FINER THAN .008 MM	SUS. SED. FALL DIAM. % FINER THAN .016 MM	SUS. SED. FALL DIAM. % FINER THAN .031 MM	SUS. SED. FALL DIAM. % FINER THAN .062 MM
OCT.											
17...	1120	19.0	1.8	103	.50	--	--	--	--	--	--
29...	0930	15.0	5.5	202	3.0	--	--	--	--	--	--
DEC.											
04...	1020	13.0	105	2180	618	45	46	54	63	73	82
04...	1145	--	323	6150	5360	--	--	--	--	--	75
28...	0830	10.0	31	486	41	49	56	63	70	75	--
29...	0820	9.0	19	191	9.8	76	83	91	96	98	--
JAN.											
30...	1250	9.5	1.7	87	.40	--	--	--	--	--	--
FEB.											
03...	0830	10.5	144	2550	991	29	33	38	46	55	65
MAR.											
06...	0905	13.5	6.4	575	9.9	--	--	--	--	--	--
06...	1055	14.0	2.2	366	2.2	89	99	99	100	--	--
06...	1245	20.0	1.2	259	.84	96	100	--	--	--	--
08...	1100	15.5	9.7	386	10	82	92	96	99	100	--
08...	1430	14.0	344	5680	5280	41	42	43	51	57	66
08...	1615	15.0	88	2070	492	53	59	66	74	80	86
APR.											
09...	1120	16.0	1.0	77	.21	--	--	--	--	--	--

DATE	SUS. SED. SIEVE DIAM. % FINER THAN .062 MM	SUS. SED. FALL DIAM. % FINER THAN .125 MM	SUS. SED. SIEVE DIAM. % FINER THAN .125 MM	SUS. SED. FALL DIAM. % FINER THAN .250 MM	SUS. SED. SIEVE DIAM. % FINER THAN .250 MM	SUS. SED. FALL DIAM. % FINER THAN .500 MM	SUS. SED. SIEVE DIAM. % FINER THAN .500 MM	SUS. SED. FALL DIAM. % FINER THAN 1.00 MM	SUS. SED. SIEVE DIAM. % FINER THAN 1.00 MM	SUS. SED. SIEVE DIAM. % FINER THAN 2.00 MM
OCT.										
17...	99	--	100	--	--	--	--	--	--	--
29...	100	--	--	--	--	--	--	--	--	--
DEC.										
04...	--	89	--	94	--	100	--	--	--	--
04...	--	94	--	99	--	100	--	--	--	--
28...	76	--	79	--	81	--	95	--	99	100
29...	99	--	100	--	--	--	--	--	--	--
JAN.										
30...	92	--	95	--	98	--	100	--	--	--
FEB.										
03...	--	85	--	97	--	99	--	100	--	--
MAR.										
06...	99	--	100	--	--	--	--	--	--	--
06...	--	--	--	--	--	--	--	--	--	--
06...	--	--	--	--	--	--	--	--	--	--
08...	--	--	--	--	--	--	--	--	--	--
08...	--	80	--	96	--	99	--	100	--	--
08...	--	94	--	100	--	--	--	--	--	--
APR.										
09...	97	--	99	--	100	--	--	--	--	--

SAN DIEGO CREEK BASIN
(Formerly reported as PETERS CANYON WASH BASIN, in error)

11048550 SAN DIEGO CREEK AT LANE ROAD, NEAR IRVINE, CALIF.

LOCATION.--Lat 33°40'18", long 117°50'06", in NW¼ sec.60, T.6 S., R.8 W., in San Joaquin Grant, Orange County, on downstream side of abandoned county road bridge 800 ft (200 m) north of the San Diego Freeway (Interstate 405), 0.2 mi (0.3 km) downstream from Lane Road, and 1.7 mi (2.7 km) north of University of California at Irvine.

PERIOD OF RECORD.--October 1973 to current year. Previous records published by Orange County Flood Control District.

GAGE.--Water-stage recorder. Datum of gage is 30 ft (9.1 m), from topographic map.

EXTREMES.--Current year: Maximum discharge, 4,000 ft^3/s (113 m^3/s) Dec. 4 (gage height, 8.76 ft or 2.670 m), from rating curve extended above 100 ft^3/s (2.83 m^3/s); minimum daily, 4.2 ft^3/s (0.12 m^3/s) Dec. 31.
Period of record: Maximum discharge, 4,000 ft^3/s (113 m^3/s) Dec. 4, 1974 (gage height, 8.76 ft or 2.670 m), from rating curve extended above 100 ft^3/s (2.83 m^3/s); minimum daily, 4.2 ft^3/s (0.12 m^3/s) Dec. 31, 1974.

REMARKS.--Records poor because of undefined rating above 100 ft^3/s (2.83 m^3/s). Low-flow discharge is affected by ground water pumping and irrigation runoff.

COOPERATION.--Records furnished by Orange County Flood Control District and reviewed by the Geological Survey.

DISCHARGE, IN CUBIC FEET PER SECOND, WATER YEAR OCTOBER 1974 TO SEPTEMBER 1975
MEAN VALUES

DAY	OCT	NOV	DEC	JAN	FEB	MAR	APR	MAY	JUN	JUL	AUG	SEP
1	13	8.0	9.2	8.3	5.4	7.3	6.6	5.4	13	13	14	9.0
2	13	8.9	8.9	9.2	4.8	7.0	6.0	5.2	15	12	15	12
3	13	7.9	10	9.6	123	6.0	8.0	5.4	15	17	15	19
4	13	7.0	740	10	31	6.6	8.0	4.8	15	13	15	20
5	13	7.3	15	11	26	13	36	4.8	15	13	15	9.9
6	13	7.9	8.2	11	5.6	93	39	5.2	15	15	15	8.4
7	18	8.2	5.6	13	5.6	18	23	7.6	15	16	13	12
8	15	9.2	5.0	11	5.6	325	181	6.0	16	20	12	15
9	13	9.4	5.0	8.9	82	31	153	5.8	17	19	11	7.8
10	13	10	5.8	8.9	30	188	17	6.6	17	17	12	15
11	12	12	5.8	7.6	6.3	111	12	5.8	14	15	9.0	13
12	12	13	6.3	7.3	5.0	28	12	6.0	12	14	11	12
13	12	12	7.0	7.6	4.8	8.9	11	6.0	12	18	7.3	14
14	12	11	7.1	7.6	5.6	69	11	7.0	11	16	12	21
15	9.6	10	6.8	6.6	5.2	8.3	20	7.6	11	15	9.9	12
16	10	11	7.0	7.0	4.8	7.3	15	8.0	8.3	16	7.3	10
17	12	10	7.1	7.6	4.8	7.3	28	8.9	12	17	13	13
18	12	9.2	7.0	7.3	5.4	6.3	11	8.6	27	18	13	12
19	12	7.9	6.0	6.0	6.0	6.3	7.3	9.2	16	17	12	15
20	12	8.2	5.5	6.0	5.8	6.3	7.6	11	13	17	10	22
21	12	8.4	5.0	6.6	5.8	6.0	7.3	10	12	17	10	15
22	12	9.2	5.0	6.3	5.2	64	7.0	11	11	16	20	18
23	13	8.4	4.6	5.8	5.8	11	7.0	10	10	16	13	11
24	13	8.4	4.9	6.3	5.6	8.0	7.3	9.9	10	16	9.9	13
25	13	8.2	4.9	5.8	5.6	7.6	16	11	11	17	16	15
26	13	10	4.7	5.4	6.3	7.0	6.3	12	15	18	15	14
27	12	8.9	4.7	5.0	6.6	7.6	6.0	12	14	16	16	15
28	25	7.9	148	5.2	7.0	8.0	6.0	11	11	15	8.4	14
29	39	7.3	167	5.4	---	6.0	6.3	12	12	15	13	15
30	10	10	11	23	---	7.6	5.6	12	12	17	10	18
31	9.4	---	4.2	12	---	7.6	---	14	---	14	9.0	---
TOTAL	424.0	274.8	1242.3	258.3	420.6	1094.0	687.3	259.8	407.3	495	381.8	420.1
MEAN	13.7	9.16	40.1	8.33	15.0	35.3	22.9	8.38	13.6	16.0	12.3	14.0
MAX	39	13	740	23	123	325	181	14	27	20	20	22
MIN	9.4	7.0	4.2	5.0	4.8	6.0	5.6	4.8	8.3	12	7.3	7.8
AC-FT	841	545	2460	512	834	2170	1360	515	808	982	757	833

CAL YR 1974 TOTAL 8703.2 MEAN 23.8 MAX 923 MIN 4.2 AC-FT 17260
WTR YR 1975 TOTAL 6365.3 MEAN 17.4 MAX 740 MIN 4.2 AC-FT 12630

11048550 SAN DIEGO CREEK AT LANE ROAD, NEAR IRVINE, CALIF.--Continued

PERIOD OF RECORD.--Water temperatures: February 1972 to current year.
Sediment records: April 1972 to current year.

EXTREMES.--Current year:
Sediment concentrations: Maximum daily, 5,630 mg/l Dec. 4; minimum daily, 20 mg/l Apr. 22, 23, May 5.
Sediment discharge: Maximum daily, 22,900 tons (20,800 tonnes) Dec. 4; minimum daily, 0.26 ton (0.24 tonne) May 5.
Period of record:
Sediment concentrations: Maximum daily, 10,000 mg/l May 4, 1972; minimum daily, 20 mg/l Apr. 22, 23, May 5, 1975.
Sediment discharge: Maximum daily, 22,900 tons (20,800 tonnes) Dec. 4, 1974; minimum daily, 0.26 ton (0.24 tonne) May 5, 1975.

TEMPERATURE (DEG. C) OF WATER, WATER YEAR OCTOBER 1974 TO SEPTEMBER 1975
ONCE-DAILY

DAY	OCT	NOV	DEC	JAN	FEB	MAR	APR	MAY	JUN	JUL	AUG	SEP
1	---	---	11.0	---	9.0	13.0	22.5	---	18.5	---	21.5	---
2	---	16.5	---	---	---	---	---	---	26.5	27.0	---	21.5
3	---	---	13.0	10.5	---	---	---	---	22.5	29.5	---	28.0
4	---	---	---	---	---	16.5	12.5	---	---	---	21.5	25.0
5	---	16.0	---	8.5	14.0	---	---	---	---	---	---	---
6	---	---	---	---	21.5	14.0	12.5	26.5	---	---	21.5	21.5
7	---	14.5	---	---	---	---	---	---	18.0	22.0	---	---
8	19.0	---	11.0	---	13.0	14.5	14.0	25.5	---	---	---	---
9	---	---	---	---	13.0	13.5	16.0	18.5	19.5	21.5	---	---
10	15.5	---	---	---	14.0	---	---	---	---	31.0	---	---
11	---	---	---	---	14.0	---	---	17.0	---	---	---	19.5
12	24.5	13.0	---	17.0	---	---	17.0	---	---	24.0	---	---
13	---	---	---	---	---	---	---	---	---	---	---	19.5
14	---	12.5	10.5	---	---	---	---	---	---	---	22.5	---
15	18.5	---	11.0	16.5	---	---	16.0	21.5	---	---	---	---
16	---	---	---	---	---	---	---	---	19.5	---	---	---
17	16.5	---	---	---	14.5	---	14.5	---	---	31.0	---	28.0
18	---	---	---	11.0	---	---	---	22.0	---	---	---	---
19	---	12.5	---	10.5	15.0	---	---	---	---	---	---	25.0
20	18.5	---	---	---	12.5	14.0	---	18.5	---	22.0	24.5	---
21	---	15.5	10.5	---	---	---	---	19.5	19.0	---	19.5	22.5
22	17.0	---	---	---	---	---	18.0	---	---	---	---	---
23	---	---	---	---	---	---	---	24.5	23.5	20.0	---	---
24	---	11.0	---	---	---	19.0	---	---	17.0	28.5	---	---
25	---	---	---	---	21.5	---	---	---	---	---	---	---
26	---	7.5	---	13.5	---	9.0	---	---	---	20.0	---	---
27	17.0	---	---	---	---	---	18.0	---	---	---	---	---
28	---	---	10.5	---	---	9.5	26.5	24.5	19.5	29.0	22.5	---
29	---	---	10.0	---	---	---	20.0	---	---	22.5	---	---
30	---	---	---	9.5	---	---	---	---	---	---	17.5	---
31	15.0	---	11.0	8.5	---	---	---	---	---	---	---	---
MONTH	---	---	---	---	---	---	---	---	---	---	---	---

11048550 SAN DIEGO CREEK AT LANE ROAD, NEAR IRVINE, CALIF.--Continued

SUSPENDED-SEDIMENT DISCHARGE (TONS/DAY), WATER YEAR OCTOBER 1974 TO SEPTEMBER 1975

	OCTOBER			NOVEMBER			DECEMBER		
DAY	MEAN DISCHARGE (CFS)	MEAN CONCEN-TRATION (MG/L)	SEDIMENT DISCHARGE (TONS/DAY)	MEAN DISCHARGE (CFS)	MEAN CONCEN-TRATION (MG/L)	SEDIMENT DISCHARGE (TONS/DAY)	MEAN DISCHARGE (CFS)	MEAN CONCEN-TRATION (MG/L)	SEDIMENT DISCHARGE (TONS/DAY)
1	13	420	15	8.0	250	5.4	9.2	470	12
2	13	425	15	8.9	320	7.7	8.9	440	11
3	13	430	15	7.9	240	5.1	10	580	16
4	13	435	15	7.0	200	3.8	740	5630	22900
5	13	440	15	7.3	230	4.5	15	740	30
6	13	450	16	7.9	290	6.2	8.2	220	4.9
7	18	470	27	8.2	380	8.4	5.6	210	3.2
8	15	450	18	9.2	430	11	5.0	220	3.0
9	13	460	16	9.4	480	12	5.0	240	3.2
10	13	580	20	10	530	14	5.8	250	3.9
11	12	350	11	12	590	19	5.8	270	4.2
12	12	270	8.7	13	640	22	6.3	270	4.6
13	12	320	10	12	700	23	7.0	250	4.7
14	12	360	12	11	650	19	7.1	240	4.6
15	9.6	400	10	10	560	15	6.8	260	4.8
16	10	650	18	11	470	14	7.0	270	5.1
17	12	900	29	10	410	11	7.1	270	5.2
18	12	890	29	9.2	350	8.7	7.0	260	4.9
19	12	880	29	7.9	310	6.6	6.0	230	3.7
20	12	870	28	8.2	290	6.4	5.5	210	3.1
21	12	710	23	8.4	320	7.3	5.0	190	2.6
22	12	620	20	9.2	320	7.9	5.0	160	2.2
23	13	500	18	8.4	310	7.0	4.6	150	1.9
24	13	430	15	8.4	350	7.9	4.9	140	1.9
25	13	350	12	8.2	450	10	4.9	130	1.7
26	13	300	11	10	600	16	4.7	120	1.5
27	12	470	15	8.9	520	12	4.7	110	1.4
28	25	750	72	7.9	450	9.6	148	2120	1610
29	39	950	183	7.3	380	7.5	167	1950	1250
30	10	620	17	10	500	13	11	600	18
31	9.4	320	8.1	---	---	---	4.2	230	2.6
TOTAL	424.0	---	750.8	274.8	---	321.0	1242.3	---	25925.9

	JANUARY			FEBRUARY			MARCH		
DAY	MEAN DISCHARGE (CFS)	MEAN CONCEN-TRATION (MG/L)	SEDIMENT DISCHARGE (TONS/DAY)	MEAN DISCHARGE (CFS)	MEAN CONCEN-TRATION (MG/L)	SEDIMENT DISCHARGE (TONS/DAY)	MEAN DISCHARGE (CFS)	MEAN CONCEN-TRATION (MG/L)	SEDIMENT DISCHARGE (TONS/DAY)
1	8.3	200	4.5	5.4	50	.73	7.3	200	3.9
2	9.2	250	6.2	4.8	45	.58	7.0	150	2.8
3	9.6	300	7.8	123	2220	1310	6.0	120	1.9
4	10	320	8.6	31	860	96	6.6	140	2.5
5	11	330	9.8	26	570	40	13	500	45
6	11	370	11	5.6	55	.83	93	2190	1010
7	13	410	14	5.6	50	.76	18	830	57
8	11	300	8.9	5.6	100	1.5	325	4710	6370
9	8.9	200	4.8	82	1360	380	31	540	45
10	8.9	150	3.6	30	590	48	188	2340	2430
11	7.6	120	2.5	6.3	150	2.6	111	1580	557
12	7.3	90	1.8	5.0	130	1.8	28	450	34
13	7.6	95	2.0	4.8	120	1.6	8.9	210	5.0
14	7.6	100	2.1	5.6	150	2.3	69	2150	778
15	6.6	105	1.9	5.2	140	2.0	8.3	600	13
16	7.0	180	3.4	4.8	130	1.7	7.3	160	3.2
17	7.6	210	4.3	4.8	120	1.6	7.3	140	2.8
18	7.3	160	3.2	5.4	70	1.0	6.3	130	2.2
19	6.0	100	1.6	6.0	50	.81	6.3	125	2.1
20	6.0	90	1.5	5.8	65	1.0	6.3	120	2.0
21	6.6	100	1.8	5.8	50	.78	6.0	115	1.9
22	6.3	140	2.4	5.2	40	.56	64	960	315
23	5.8	150	2.3	5.8	60	.94	11	220	6.5
24	6.3	150	2.6	5.6	55	.83	8.0	100	2.2
25	5.8	130	2.0	5.6	60	.91	7.6	90	1.8
26	5.4	120	1.8	6.3	80	1.4	7.0	130	2.5
27	5.0	110	1.5	6.6	110	2.0	7.6	140	2.9
28	5.2	120	1.7	7.0	150	2.8	8.0	160	3.5
29	5.4	125	1.8	---	---	---	6.0	100	1.6
30	23	550	60	---	---	---	7.6	90	1.8
31	12	440	14	---	---	---	7.6	100	2.1
TOTAL	258.3	---	195.4	420.6	---	1905.03	1094.0	---	11709.2

11048550 SAN DIEGO CREEK AT LANE ROAD, NEAR IRVINE, CALIF.--Continued

SUSPENDED-SEDIMENT DISCHARGE (TONS/DAY), WATER YEAR OCTOBER 1974 TO SEPTEMBER 1975

	APRIL			MAY			JUNE		
DAY	MEAN DISCHARGE (CFS)	MEAN CONCEN-TRATION (MG/L)	SEDIMENT DISCHARGE (TONS/DAY)	MEAN DISCHARGE (CFS)	MEAN CONCEN-TRATION (MG/L)	SEDIMENT DISCHARGE (TONS/DAY)	MEAN DISCHARGE (CFS)	MEAN CONCEN-TRATION (MG/L)	SEDIMENT DISCHARGE (TONS/DAY)
1	6.6	75	1.3	5.4	45	.66	13	650	23
2	6.0	60	.97	5.2	35	.49	15	740	30
3	8.0	55	1.2	5.4	30	.44	15	1200	49
4	8.0	50	1.1	4.8	25	.32	15	1050	43
5	36	580	183	4.8	20	.26	15	900	36
6	39	1050	111	5.2	25	.35	15	870	35
7	23	300	19	7.6	250	5.1	15	840	34
8	181	1900	3520	6.0	210	3.4	16	1800	78
9	153	1280	1250	5.8	200	3.1	17	3140	149
10	17	550	25	6.6	170	3.0	17	2100	89
11	12	230	7.5	5.8	140	2.2	14	2980	124
12	12	110	3.6	6.0	130	2.1	12	2700	87
13	11	95	2.8	6.0	140	2.3	12	2300	75
14	11	100	3.0	7.0	190	3.6	11	2000	59
15	20	180	9.7	7.6	230	4.7	11	1800	53
16	15	120	4.9	8.0	250	5.4	8.3	1620	27
17	28	400	30	8.9	230	5.5	12	1350	44
18	11	210	6.2	8.6	190	4.4	27	1070	166
19	7.3	120	2.4	9.2	210	5.2	16	1000	43
20	7.6	70	1.4	11	250	7.4	13	920	32
21	7.3	40	.79	10	370	10	12	840	27
22	7.0	20	.38	11	330	9.8	11	740	22
23	7.0	20	.38	10	270	7.3	10	650	18
24	7.3	25	.49	9.9	250	6.7	10	800	22
25	16	265	18	11	280	8.3	11	980	29
26	6.3	90	1.5	12	350	11	15	1200	49
27	6.0	55	.89	12	380	12	14	1100	42
28	6.0	70	1.1	11	320	9.5	11	1000	30
29	6.3	85	1.4	12	350	11	12	930	30
30	5.6	65	.98	12	400	13	12	900	29
31	---	---	---	14	510	19	---	---	---
TOTAL	687.3	---	5209.98	259.8	---	177.52	407.3	---	1574

	JULY			AUGUST			SEPTEMBER		
DAY	MEAN DISCHARGE (CFS)	MEAN CONCEN-TRATION (MG/L)	SEDIMENT DISCHARGE (TONS/DAY)	MEAN DISCHARGE (CFS)	MEAN CONCEN-TRATION (MG/L)	SEDIMENT DISCHARGE (TONS/DAY)	MEAN DISCHARGE (CFS)	MEAN CONCEN-TRATION (MG/L)	SEDIMENT DISCHARGE (TONS/DAY)
1	13	1500	53	14	500	19	9.0	150	3.6
2	12	2500	81	15	600	24	12	140	4.5
3	17	2000	92	15	700	28	19	120	6.2
4	13	1800	63	15	800	32	20	180	9.7
5	13	1700	60	15	900	36	9.9	180	4.8
6	15	1550	63	15	1050	43	8.4	185	4.2
7	16	1460	63	13	1200	42	12	200	6.5
8	20	1400	76	12	1500	49	15	220	8.9
9	19	1300	67	11	1700	50	7.8	200	4.2
10	17	1100	50	12	2000	65	15	195	7.9
11	15	1350	55	9.0	2300	56	13	190	6.7
12	14	1600	60	11	2600	77	12	190	6.2
13	18	1500	73	7.3	3000	59	14	195	7.4
14	16	1200	52	12	2000	65	21	230	13
15	15	1050	43	9.9	1200	32	12	150	4.9
16	16	1100	48	7.3	700	14	10	140	3.8
17	17	1150	53	13	450	16	13	150	5.3
18	18	1300	63	13	260	9.1	12	155	5.0
19	17	1150	53	12	200	6.5	15	160	6.5
20	17	960	44	10	160	4.3	22	170	10
21	17	920	42	10	140	3.8	15	160	6.5
22	16	1000	43	20	180	9.7	18	170	8.3
23	16	1150	50	13	160	5.6	11	270	8.0
24	16	1200	52	9.9	140	3.7	13	450	16
25	17	1150	53	16	160	6.9	15	600	24
26	18	1100	53	15	150	6.1	14	550	21
27	16	1200	52	16	130	5.6	15	520	21
28	15	1400	57	8.4	120	2.7	14	480	18
29	15	1800	73	13	140	4.9	15	460	19
30	17	1600	73	10	160	4.3	18	440	21
31	14	920	35	9.0	150	3.6	---	---	---
TOTAL	495	---	1795	381.8	---	783.8	420.1	---	292.1
YEAR	6365.3		50639.73						

11048550 SAN DIEGO CREEK AT LANE ROAD, NEAR IRVINE, CALIF.--Continued

SUMMARY OF WATER AND SEDIMENT DISCHARGE, WATER YEAR OCTOBER 1974 TO SEPTEMBER 1975

MONTH	WATER DISCHARGE CFS-DAYS	SUSPENDED SEDIMENT DISCHARGE TONS	BEDLOAD DISCHARGE TONS	TOTAL SEDIMENT DISCHARGE TONS
OCTOBER 1974	424.00	750.80	273	1020
NOVEMBER ...	274.80	321.00	146	467
DECEMBER ...	1242.30	25925.90	1590	27500
JANUARY 1975	258.30	195.40	135	330
FEBRUARY ...	420.60	1905.03	373	2280
MARCH	1094.00	11709.20	1260	13000
APRIL	687.30	5209.98	679	5890
MAY	259.80	177.52	135	313
JUNE	407.30	1574.00	257	1830
JULY	495.00	1795.00	329	2120
AUGUST	381.80	783.80	231	1020
SEPTEMBER ..	420.10	292.10	268	560
TOTAL	6365.30	50639.73	5676	56330

PARTICLE SIZE DISTRIBUTION OF SUSPENDED SEDIMENT, WATER YEAR OCTOBER 1974 TO SEPTEMBER 1975

DATE	TIME	TEMPERATURE (DEG C)	INSTANTANEOUS DISCHARGE (CFS)	SUSPENDED SEDIMENT (MG/L)	SUSPENDED SEDIMENT DISCHARGE (T/DAY)	SUS. SED. FALL DIAM. % FINER THAN .002 MM	SUS. SED. FALL DIAM. % FINER THAN .004 MM	SUS. SED. FALL DIAM. % FINER THAN .008 MM	SUS. SED. FALL DIAM. % FINER THAN .016 MM	SUS. SED. FALL DIAM. % FINER THAN .031 MM
DEC.										
04...	0930	--	1260	11100	37800	34	38	45	53	63
04...	1215	--	1290	6210	21600	39	45	48	58	69
05...	0900	--	16	700	30	48	54	58	62	63
28...	0905	10.5	160	2250	972	39	49	58	69	77
29...	0745	10.0	215	2050	1190	36	41	46	51	57
JAN.										
18...	1000	11.0	9.2	382	9.5	63	73	80	83	83
FEB.										
04...	1445	--	70	1050	198	48	56	64	73	84
09...	0945	13.0	101	1150	314	49	56	63	72	78
MAR.										
06...	0930	14.0	141	3690	1410	47	50	59	68	74
06...	1310	19.0	51	1660	229	43	49	55	59	61
08...	1040	14.5	361	5220	5090	46	53	61	70	78
08...	1455	14.5	1240	9620	32200	38	38	43	50	60
08...	1555	14.5	807	7680	16700	36	38	44	51	60
09...	0945	13.5	19	339	17	--	--	--	--	--
APR.										
09...	1145	16.0	52	655	92	--	--	--	--	--
28...	1330	26.5	6.6	73	1.3	--	--	--	--	--

DATE	SUS. SED. FALL DIAM. % FINER THAN .062 MM	SUS. SED. SIEVE DIAM. % FINER THAN .062 MM	SUS. SED. FALL DIAM. % FINER THAN .125 MM	SUS. SED. SIEVE DIAM. % FINER THAN .125 MM	SUS. SED. FALL DIAM. % FINER THAN .250 MM	SUS. SED. SIEVE DIAM. % FINER THAN .250 MM	SUS. SED. FALL DIAM. % FINER THAN .500 MM	SUS. SED. SIEVE DIAM. % FINER THAN .500 MM	SUS. SED. SIEVE DIAM. % FINER THAN 1.00 MM
DEC.									
04...	72	--	85	--	99	--	100	--	--
04...	80	--	91	--	100	--	--	--	--
05...	--	64	--	79	--	100	--	--	--
28...	86	--	97	--	100	--	--	--	--
29...	65	--	81	--	100	--	--	--	--
JAN.									
18...	83	--	85	--	98	--	100	--	--
FEB.									
04...	--	86	--	94	--	99	--	100	--
09...	--	84	--	93	--	100	--	--	--
MAR.									
06...	80	--	84	--	94	--	100	--	--
06...	--	64	--	71	--	92	--	100	--
08...	86	--	94	--	100	--	--	--	--
08...	74	--	91	--	99	--	100	--	--
08...	72	--	89	--	99	--	100	--	--
09...	--	97	--	99	--	100	--	--	--
APR.									
09...	--	98	--	99	--	100	--	--	--
28...	--	40	--	50	--	77	--	97	100

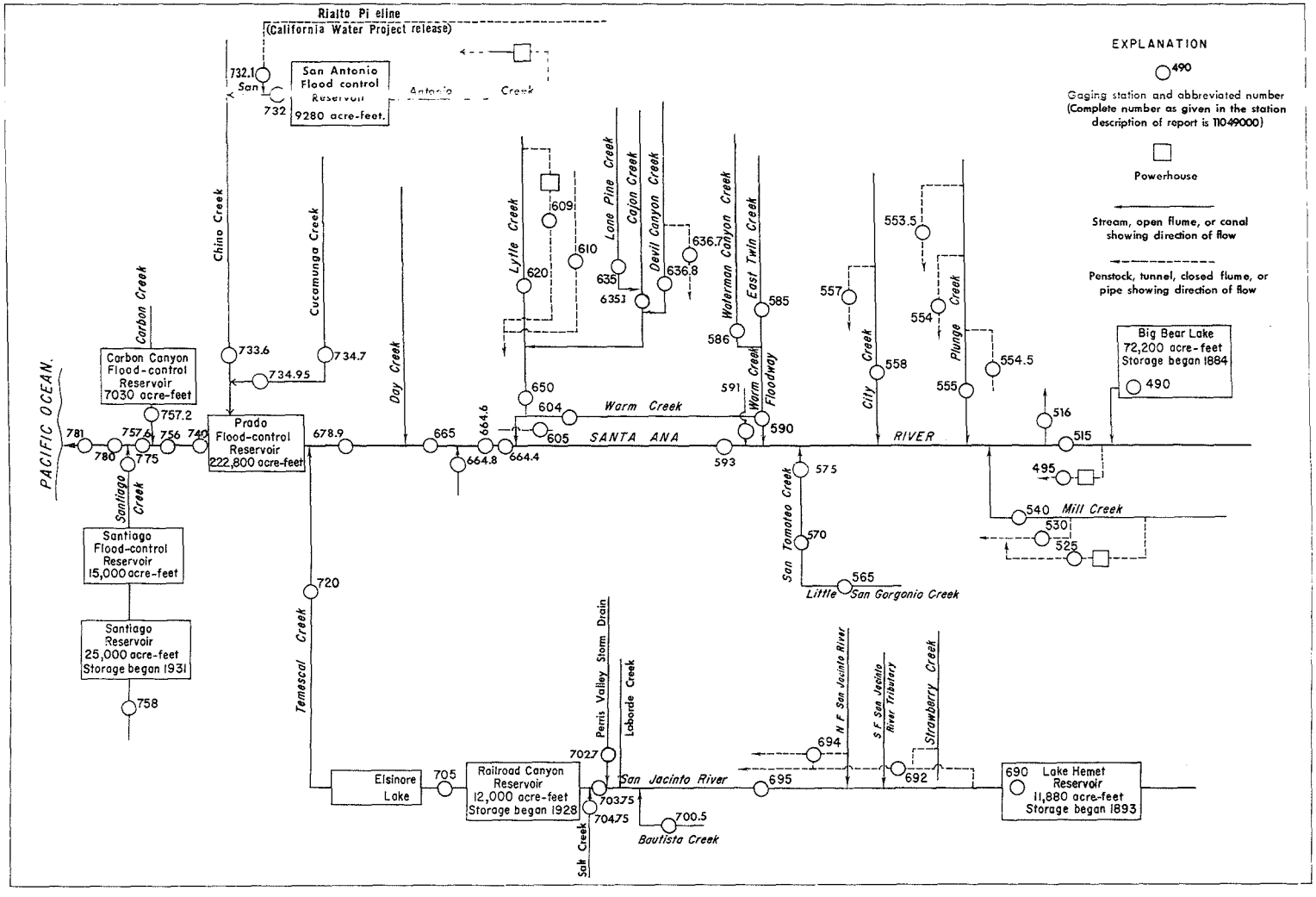

Figure 5.-- Schematic diagram showing diversions and storage in Santa Ana River basin.

11049000 BIG BEAR LAKE NEAR BIG BEAR LAKE, CALIF.

LOCATION.--Lat 34°14'33", long 116°58'33", in SW¼ sec.22, T.2 N., R.1 W., San Bernardino County, at Big Bear Lake Dam on Bear Creek, 4 mi (6 km) west of town of Big Bear Lake, and 7.5 mi (12.1 km) upstream from mouth.

DRAINAGE AREA.--71.5 mi^2 (185.2 km^2), including Baldwin Lake drainage.

PERIOD OF RECORD.--October 1950 to current year in reports of Geological Survey. February 1884 to September 1950 in files of Bear Valley Mutual Water Co.

GAGE.--Nonrecording gage. Datum of gage is 6,670.9 ft (2,033.290 m) above mean sea level (levels by Bear Valley Mutual Water Co.). Prior to 1912 at old dam 200 ft (61 m) upstream at same datum; spillway at gage height 52.4 ft (16.0 m).

EXTREMES.--Current year: Maximum contents observed, 56,430 acre-ft (69.6 hm^3) May 31; minimum contents, 46,450 acre-ft (57.3 hm^3) Sept. 30.
Period of record: Maximum contents unknown, lake spilled in 1916, 1917, 1922, 1923, 1938, 1939, 1969, 1970; lake dry October, November 1898, August to November 1899, October, November 1904.

REMARKS.--Lake is formed by multiple-arch concrete dam, completed in 1912, replacing existing lower dam built in 1884; storage began in spring of 1884. Capacity, 72,200 acre-ft (89.0 hm^3) at elevation 6,743.2 ft (2,055.327 m), top of dam. Capacity table based on survey made in 1883. No dead storage. Water used for irrigation only. See schematic diagram of Santa Ana River basin.

COOPERATION.--Record of contents furnished by Bear Valley Mutual Water Co.

MONTHEND CONTENTS, WATER YEAR OCTOBER 1974 TO SEPTEMBER 1975

Date	Contents (acre-feet)	Change in contents (acre-feet)
Sept. 30	54,960	--
Oct. 31	53,690	-1,270
Nov. 30	53,060	-630
Dec. 31	53,690	+630
CAL YR 1974	--	-5,270
Jan. 31	54,110	+420
Feb. 28	54,540	+430
Mar. 31	54,960	+420
Apr. 30	56,220	+1,260
May 31	56,430	+210
June 30	54,320	-2,110
July 31	51,630	-2,690
Aug. 31	48,840	-2,790
Sept. 30	46,450	-2,390
WTR YR 1975	--	-8,510

11051500 SANTA ANA RIVER NEAR MENTONE, CALIF.

LOCATION.--Lat 34°06'30", long 117°05'59", in NE¼SW¼SW¼ sec.4, T.1 S., R.2 W., San Bernardino County, on right bank at diversion near mouth of canyon, 1.6 mi (2.6 km) upstream from Mill Creek, and 3.2 mi (5.1 km) northeast of Mentone.

DRAINAGE AREA.--209 mi² (541 km²), including area tributary to Baldwin Lake at head of Bear Valley.

PERIOD OF RECORD.--July 1896 to current year. Prior to October 1914, observed records not equivalent owing to Greenspot pipeline diversion between sites and exclusion of discharge from Warm Springs Canyon. Monthly discharge only for January 1910, January, February 1916, published in WSP 1315-B.

GAGE.--Water-stage recorder on river; water-stage recorder on powerhouse diversion. Altitude of gage is 1,950 ft (594 m), from topographic map. Prior to Sept. 2, 1917, nonrecording gages at several sites within 1.5 mi (2.4 km) upstream at various datums. Sept. 3, 1917, to May 27, 1969, water-stage recorder at site 0.2 mi (0.3 km) upstream at different datum.

AVERAGE DISCHARGE (River only).--61 years (1914-75), 32.6 ft³/s (0.923 m³/s), 23,620 acre-ft/yr (29.1 hm³/yr).
(Combined river and canal).--79 years, 80.6 ft³/s (2.28 m³/s), 58,390 acre-ft/yr (72.0 hm³/yr).

EXTREMES (River only).--Current year: Maximum discharge, 453 ft³/s (12.8 m³/s) Dec. 4 (gage height, 3.27 ft or 0.997 m); no flow many days.
Period of record: Maximum discharge, 52,300 ft³/s (1,480 m³/s) Mar. 2, 1938 (gage height, 14.3 ft or 4.359 m, site and datum then in use), on basis of slope-area measurement of maximum flow; no flow at times in some years.
(Combined flow).--Current year: Maximum discharge, 454 ft³/s (12.9 m³/s) Dec. 4; minimum daily, 24 ft³/s (0.68 m³/s) Dec. 23, 24.
Period of record: Maximum discharge, 52,300 ft³/s (1,480 m³/s) Mar. 2, 1938; minimum daily, 7.4 ft³/s (0.21 m³/s) Sept. 21, 1971.
Flood of Feb. 23, 1891, 53,700 ft³/s (1,520 m³/s), from notes furnished by F. C. Finkle, consulting engineer, Los Angeles.

REMARKS.--Records fair. Flow partly regulated by Big Bear Lake (see sta 11049000). For records of combined discharge of Santa Ana River and Southern California Edison Co.'s canal below powerplant No. 2, which diverts above station, see following page. Bear Valley Mutual Water Co. pumped 787 acre-ft (970,000 m³) into canal below canal gage. Prior to Oct. 1, 1952, pumped water entered canal above gage. See schematic diagram of Santa Ana River basin.

COOPERATION.--Nine discharge measurements on Southern California Edison Co.'s canal below powerplant No. 2 furnished by that agency, in connection with a Federal Power Commission project.

DISCHARGE, IN CUBIC FEET PER SECOND, WATER YEAR OCTOBER 1974 TO SEPTEMBER 1975
MEAN VALUES

DAY	OCT	NOV	DEC	JAN	FEB	MAR	APR	MAY	JUN	JUL	AUG	SEP
1	0	21	3.2	.57	.05	1.0	15	7.2	2.1	0	.88	.11
2	.03	8.3	3.2	.70	.20	1.0	9.5	7.2	1.6	0	.79	.10
3	.09	5.4	2.2	.24	6.1	1.0	6.6	4.1	1.4	0	.79	.10
4	.12	5.4	168	.12	5.8	1.1	5.9	0	1.3	.22	13	.08
5	.63	5.4	130	.06	5.6	1.6	6.6	0	1.2	.42	27	.07
6	.01	5.3	25	.05	5.4	15	13	0	1.2	.36	29	.07
7	.03	5.3	4.5	.05	2.6	13	12	0	1.1	.36	32	.05
8	.06	5.3	4.3	.08	2.2	153	17	0	1.1	.36	29	.05
9	.01	5.2	4.4	2.3	34	101	28	0	1.1	.53	25	.05
10	.06	5.2	4.0	.43	102	112	19	0	1.1	.21	30	.05
11	.04	5.1	4.0	.41	20	79	13	0	.97	.20	33	.04
12	.06	4.8	4.4	.85	7.2	53	13	0	.88	.19	33	.04
13	.42	4.6	3.8	.71	6.4	37	13	0	.88	.20	29	.03
14	.56	4.6	3.4	.05	4.2	39	11	0	.97	.19	30	0
15	.20	4.3	2.9	.02	3.0	23	8.2	0	.97	.18	20	0
16	1.5	3.3	2.6	.04	2.4	19	7.0	1.9	1.1	.15	3.4	0
17	.49	1.6	2.4	.22	2.6	15	7.0	3.0	1.2	.14	1.1	0
18	.33	1.3	2.4	1.6	2.6	9.9	4.9	3.0	1.2	.14	.40	0
19	0	1.2	2.3	.12	1.9	8.0	4.8	3.2	1.2	.12	.25	0
20	0	1.2	2.7	.05	1.6	7.6	4.4	4.9	1.2	.12	.21	0
21	0	1.2	.44	.02	2.6	7.6	4.4	3.8	1.1	.10	.17	0
22	0	1.2	.25	.01	7.2	10	4.9	3.3	.97	.10	.14	0
23	0	2.0	.29	.02	8.9	8.9	4.2	3.1	.88	.10	.14	0
24	0	2.2	.33	.02	8.0	8.4	3.6	3.0	.88	1.9	.14	0
25	0	2.1	.61	0	1.6	12	4.9	2.8	.88	.71	.14	0
26	0	2.1	.91	0	1.4	10	5.3	2.7	.71	.56	.14	0
27	0	1.9	.33	0	1.1	8.0	5.6	2.7	.88	.63	.11	0
28	5.0	1.9	.38	.38	1.1	7.2	7.1	2.6	.88	.88	.11	0
29	17	2.0	1.2	.14	---	6.4	7.0	2.4	.88	.97	.11	0
30	16	2.0	1.0	.05	---	6.0	6.8	2.4	.88	.97	.11	0
31	30	---	.17	.09	---	7.2	---	2.2	---	.88	.11	---
TOTAL	72.64	122.4	385.61	9.40	247.75	781.9	272.7	65.5	32.71	11.89	339.24	.84
MEAN	2.34	4.08	12.4	.30	8.85	25.2	9.09	2.11	1.09	.38	10.9	.028
MAX	30	21	168	2.3	102	153	28	7.2	2.1	1.9	33	.11
MIN	0	1.2	.17	0	.05	1.0	3.6	0	.71	0	.11	0
AC-FT	144	243	765	19	491	1550	541	130	65	24	673	1.7

CAL YR 1974 TOTAL 3135.10 MEAN 8.59 MAX 168 MIN 0 AC-FT 6220
WTR YR 1975 TOTAL 2342.58 MEAN 6.42 MAX 168 MIN 0 AC-FT 4650

Peak discharge (base, 150 ft³/s)

Date	Time	G.H.	Discharge	Date	Time	G.H.	Discharge
12-4	2100	3.27	453	3-8	1700	3.10	434
2-10	0630	2.79	248				

11051500 SANTA ANA RIVER NEAR MENTONE, CALIF.--Continued

COMBINED DISCHARGE, IN CUBIC FEET PER SECOND, OF SANTA ANA RIVER AND SOUTHERN CALIFORNIA EDISON CO.'S CANAL NEAR MENTONE, CALIF., WATER YEAR OCTOBER 1974 TO SEPTEMBER 1975

DAY	OCT	NOV	DEC	JAN	FEB	MAR	APR	MAY	JUN	JUL	AUG	SEP
1	43	36	39	32	28	29	71	61	39	44	39	39
2	43	40	42	31	27	29	60	65	39	43	39	38
3	44	36	42	32	37	29	57	64	38	43	39	39
4	43	36	188	32	40	31	55	60	37	42	28	40
5	44	36	131	32	41	35	57	56	37	42	27	41
6	43	33	45	32	37	59	70	54	36	42	29	40
7	44	33	37	32	36	36	66	53	39	42	32	42
8	40	32	31	31	33	156	73	53	41	43	33	46
9	40	31	32	32	64	111	91	52	41	47	37	45
10	39	31	32	30	106	126	80	52	41	43	36	43
11	39	31	31	28	47	93	75	52	41	43	36	43
12	38	30	30	29	40	81	76	52	40	43	36	42
13	37	30	30	29	37	87	76	52	40	45	35	42
14	38	30	29	29	39	98	75	51	40	45	37	41
15	37	30	29	27	38	77	71	49	40	45	50	42
16	40	42	27	26	34	71	68	51	39	45	52	42
17	39	43	26	25	33	63	69	50	40	48	47	44
18	42	44	26	26	34	60	63	49	41	49	47	43
19	42	47	26	26	33	61	61	49	42	48	45	44
20	43	48	27	26	32	63	60	55	41	47	36	44
21	43	44	26	27	31	64	61	51	39	46	35	43
22	44	43	26	27	31	69	64	48	37	48	38	43
23	44	35	24	27	35	62	62	45	38	48	38	42
24	44	31	24	26	34	61	62	44	40	42	37	42
25	44	30	26	28	30	70	64	43	40	45	37	42
26	45	29	27	28	29	64	62	42	41	44	38	42
27	44	29	28	30	28	61	60	42	51	45	40	42
28	52	29	30	30	28	58	61	41	56	48	41	41
29	56	29	29	29	---	55	60	39	56	45	41	41
30	32	36	30	29	---	55	61	39	54	41	40	42
31	31	---	31	28	---	58	---	39	---	40	39	---
TOTAL	1297	1054	1201	896	1062	2072	1991	1553	1244	1381	1184	1260
MEAN	41.8	35.1	38.7	28.9	37.9	66.8	66.4	50.1	41.5	44.5	38.2	42.0
MAX	56	48	188	32	106	156	91	65	56	49	52	46
MIN	31	29	24	25	27	29	55	39	36	40	27	38
AC-FT	2570	2090	2380	1780	2110	4110	3950	3080	2470	2740	2350	2500

CAL YR 1974 TOTAL 18873 MEAN 51.7 MAX 188 MIN 24 AC-FT 37430
WTR YR 1975 TOTAL 16195 MEAN 44.4 MAX 188 MIN 24 AC-FT 32120

Peak discharge (base, 150 ft^3/s)

Date	Time	Discharge	Date	Time	Discharge
12-4	2100	454	3-8	1700	435
2-10	0630	248			

11051600 SANTA ANA RIVER SPREADING DIVERSION NEAR MENTONE, CALIF.

LOCATION.--Lat 34°06'12", long 117°06'37", in SW¼NW¼NE¼ sec.8, T.1 S., R.2 W., San Bernardino County, on diversion channel 0.8 mi (1.3 km) downstream from Southern California Edison Co.'s powerhouse No. 3, and 2.4 mi (3.9 km) northeast of Mentone.

PERIOD OF RECORD.--October 1951 to current year.

GAGE.--Water-stage recorder and Parshall flume control. Altitude of gage is 1,840 ft (561 m), from topographic map.

EXTREMES.--Period of record: Maximum daily discharge, 141 ft^3/s (3.99 m^3/s) Mar. 16, 1973; no flow for long periods in each year.

REMARKS.--Records good. Water is diverted from Santa Ana River at diversion dam 0.8 mi (1.3 km) upstream, for spreading on debris cone downstream from mouth of Santa Ana River Canyon. Diversion began prior to 1951.

DISCHARGE, IN CUBIC FEET PER SECOND, WATER YEAR OCTOBER 1974 TO SEPTEMBER 1975
MEAN VALUES

DAY	OCT	NOV	DEC	JAN	FEB	MAR	APR	MAY	JUN	JUL	AUG	SEP
1	0	8.8	0	9.8	.07	3.1	49	38				
2	0	4.0	0	9.9	.07	1.3	41	28				
3	0	2.2	0	9.7	20	0	38	19				
4	0	8.6	55	9.7	28	0	40	22				
5	0	10	56	9.7	34	0	41	27				
6	0	7.7	41	9.7	30	25	51	27				
7	0	7.8	29	9.7	26	21	48	22				
8	0	7.6	23	9.7	23	68	51	18				
9	0	6.9	23	11	29	61	59	17				
10	0	6.3	22	10	30	71	53	12				
11	0	7.3	21	10	43	67	48	8.4				
12	0	7.5	20	10	34	56	48	4.8				
13	0	4.9	20	10	31	53	47	0				
14	0	.76	15	9.7	33	59	46	0				
15	0	0	16	9.7	31	49	46	0				
16	0	0	18	6.7	27	52	45	0				
17	0	0	17	.14	25	49	46	0				
18	0	0	17	1.1	25	47	44	0				
19	0	.01	17	.20	24	45	44	0				
20	0	.02	15	.15	23	45	44	0				
21	0	.09	11	.05	21	43	44	0				
22	0	.15	4.5	.04	19	47	45	0				
23	0	.06	1.1	.01	22	46	44	0				
24	0	0	.80	0	21	43	44	0				
25	0	0	.84	0	22	46	43	0				
26	0	0	.91	0	24	45	44	0				
27	0	0	5.9	0	17	40	43	0				
28	0	0	9.9	.07	7.2	38	42	0				
29	0	0	10	.08	---	38	42	0				
30	4.5	0	10	.04	---	38	41	0				
31	13	---	9.7	.07	---	37	---	0	---			---
TOTAL	17.5	90.69	489.65	156.95	669.34	1233.4	1361	243.2	0	0	0	0
MEAN	.56	3.02	15.8	5.06	23.9	39.8	45.4	7.85	0	0	0	0
MAX	13	10	56	11	43	71	59	38	0	0	0	0
MIN	0	0	0	0	.07	0	38	0	0	0	0	0
AC-FT	35	180	971	311	1330	2450	2700	482	0	0	0	0

CAL YR 1974 TOTAL 4527.82 MEAN 12.4 MAX 86 MIN 0 AC-FT 8980
WTR YR 1975 TOTAL 4261.73 MEAN 11.7 MAX 71 MIN 0 AC-FT 8450

11054000 MILL CREEK NEAR YUCAIPA, CALIF.

LOCATION.--Lat 34°05'27", long 117°02'12", in NW¼NE¼NE¼ sec.13, T.1 S., R.2 W., San Bernardino County, on left bank 50 ft (15 m) downstream from bridge on State Highway 190-D, 3.9 mi (6.3 km) north of Yucaipa, and 5.3 mi (8.5 km) upstream from mouth.

DRAINAGE AREA.--42.4 mi^2 (110 km^2).

PERIOD OF RECORD.--January 1919 to September 1938, October 1947 to current year. Monthly figures only for April and May 1923, published in WSP 1315-B. Prior to October 1954, published as "near Craftonville."

GAGE.--Water-stage recorder on creek; water-stage recorder and sharp-crested weir on power canal No. 1; water-stage recorder and Parshall flume on power canals Nos. 2 and 3. Datum of gage is 2,916.36 ft (888.907 m) above mean sea level (Southern California Edison Co. bench mark). See WSP 1735 for history of changes prior to Mar. 2, 1938.

AVERAGE DISCHARGE (Creek only).--47 years, 13.0 ft^3/s (0.3682 m^3/s), 9,420 acre-ft/yr (11.6 hm^3/yr).
(Combined creek and canals).--47 years, 33.8 ft^3/s (0.9572 m^3/s), 24,490 acre-ft/yr (30.2 hm^3/yr).

EXTREMES (Creek only).--Current year: Maximum discharge, 120 ft^3/s (3.40 m^3/s) Mar. 8 (gage height, 8.20 ft or 2.499 m); maximum gage height, 8.32 ft (2.536 m) Dec. 4, due to debris wave; no flow many days.
Period of record: Maximum discharge, 35,400 ft^3/s (1,000 m^3/s) Jan. 25, 1969 (gage height, 16.8 ft or 5.121 m, from floodmark), from rating curve extended above 1,100 ft^3/s (31.2 m^3/s) on basis of two field estimates at gage height 14.5 ft (4.420 m) and slope-area measurement of maximum flow; no flow at times in some years.
(Combined flow).--Current year: Maximum discharge, 138 ft^3/s (3.91 m^3/s) Mar. 8; minimum daily, 14 ft^3/s (0.40 m^3/s) Sept. 11.
Period of record: Maximum discharge, 35,400 ft^3/s (1,000 m^3/s) Jan. 25, 1969; minimum daily, 2.7 ft^3/s (0.077 m^3/s) Feb. 23, 1949.

REMARKS.--Records poor. No regulation above station. Mill Creek power canals Nos. 1, 2, and 3 divert from points 100 ft (30 m), 3 mi (5 km), and 6 mi (10 km) above station, respectively. Combined flow of Mill Creek and Mill Creek power canals Nos. 1, 2, and 3 is given on following page. See schematic diagram of Santa Ana River basin.

COOPERATION.--Water-stage recorder graph and 11 discharge measurements for Mill Creek power canals Nos. 2 and 3 furnished by Southern California Edison Co., in connection with a Federal Power Commission project.

DISCHARGE, IN CUBIC FEET PER SECOND, WATER YEAR OCTOBER 1974 TO SEPTEMBER 1975
MEAN VALUES

DAY	OCT	NOV	DEC	JAN	FEB	MAR	APR	MAY	JUN	JUL	AUG	SEP
1	0	4.0	.09	.15	.10	1.0	.10	.38	.14	.18	.01	.01
2	0	2.0	.07	.15	.10	1.0	.15	.38	.14	.17	.01	.01
3	0	1.0	.07	.15	2.5	1.0	.17	.38	.14	.11	.01	.01
4	0	.80	25	.15	2.0	1.0	.17	.38	.14	.05	.01	.01
5	0	.60	4.0	.15	1.0	2.0	.40	2.1	.14	.05	.01	.01
6	0	.20	2.1	.10	1.7	14	.24	1.5	.14	.04	0	.01
7	0	0	.86	.10	1.7	2.7	.30	.20	.14	.03	0	.01
8	0	0	.64	.10	3.1	24	.30	.20	.14	.02	0	.02
9	0	0	1.3	.10	.50	6.4	.15	.20	.14	7.6	0	.02
10	0	0	.90	.10	3.0	14	.15	.20	.14	.01	0	.02
11	0	0	.30	.05	5.0	7.6	.15	.20	.11	.01	0	.02
12	0	0	.30	.05	5.0	6.4	.15	.20	.09	.01	0	.02
13	0	0	.20	.05	3.0	5.8	.15	1.1	.10	.01	0	.02
14	0	0	.20	.05	3.0	3.6	.15	3.1	.10	.01	0	.03
15	0	0	.20	.05	3.0	1.3	.15	4.1	.10	.01	0	.03
16	0	0	2.6	.05	3.0	1.2	1.0	2.1	.10	.01	0	.03
17	0	0	1.0	.05	3.0	1.2	1.0	.50	.10	.01	0	.03
18	0	0	.60	.05	4.0	.80	2.0	.30	.10	.01	0	.03
19	0	0	.60	.05	4.0	.20	.70	.30	.10	.01	0	.03
20	0	0	.60	.05	4.0	.10	2.0	.30	.15	.01	0	.04
21	0	0	.60	.05	4.0	.10	3.7	1.5	.15	.01	0	.04
22	0	0	.60	.05	4.0	1.4	1.7	1.7	.15	.01	0	.04
23	0	0	1.4	.05	4.0	2.7	.47	.20	.15	.01	0	.04
24	0	0	1.2	.05	4.0	.10	.47	.11	.15	.01	0	.04
25	0	0	.20	.05	1.9	.10	.40	.11	.15	.01	0	.04
26	0	.02	.20	.05	.14	.10	.55	.11	.15	.01	0	.05
27	0	.05	.20	.05	.17	.10	.55	.11	.15	.01	.01	.05
28	7.0	.07	.20	.05	1.0	.10	.55	.11	.15	.01	.01	.05
29	13	.09	.20	.05	---	.10	.47	.14	.18	.01	.01	.05
30	8.0	.09	.20	.05	---	.10	.38	.14	.18	.01	.01	.05
31	1.5	---	.20	.05	---	.10	---	.14	---	.01	.01	---
TOTAL	29.5	8.92	46.83	2.30	71.91	100.30	18.82	22.49	4.01	8.47	.10	.86
MEAN	.95	.30	1.51	.074	2.57	3.24	.63	.73	.13	.27	.003	.029
MAX	13	4.0	25	.15	5.0	24	3.7	4.1	.18	7.6	.01	.05
MIN	0	0	.07	.05	.10	.10	.10	.11	.09	.01	0	.01
AC-FT	59	18	93	4.6	143	199	37	45	8.0	17	.2	1.7

CAL YR 1974 TOTAL 725.56 MEAN 1.99 MAX 41 MIN 0 AC-FT 1440
WTR YR 1975 TOTAL 314.51 MEAN .86 MAX 25 MIN 0 AC-FT 624

Peak discharge (base, 100 ft^3/s).--Mar. 8 (1600) 120 ft^3/s (8.20 ft).

NOTE.--No gage-height record most of year.

11054000 MILL CREEK NEAR YUCAIPA, CALIF.--Continued

COMBINED DISCHARGE, IN CUBIC FEET PER SECOND, OF MILL CREEK AND MILL CREEK POWER CANALS NOS. 1, 2, AND 3 NEAR YUCAIPA, CALIF., WATER YEAR OCTOBER 1974 TO SEPTEMBER 1975

DAY	OCT	NOV	DEC	JAN	FEB	MAR	APR	MAY	JUN	JUL	AUG	SEP
1	19	23	19	18	16	18	21	26	28	24	18	15
2	19	21	19	18	16	18	20	26	29	23	18	15
3	19	20	18	18	18	18	19	27	29	23	16	15
4	19	20	38	18	17	18	19	27	29	24	16	15
5	19	18	19	18	17	20	20	25	29	23	17	17
6	19	18	23	18	17	30	22	24	29	23	17	18
7	19	19	21	18	17	18	22	25	28	23	17	17
8	19	19	20	18	17	42	22	26	28	22	17	19
9	19	19	19	18	17	20	23	27	28	30	17	19
10	19	19	20	18	17	29	23	27	29	21	17	15
11	18	19	18	18	17	24	23	28	29	22	17	14
12	18	19	18	18	17	23	23	29	27	23	17	18
13	18	18	18	18	17	22	23	30	27	22	17	18
14	18	18	18	17	17	22	23	29	27	21	17	18
15	18	18	18	17	17	22	24	29	27	21	17	18
16	18	18	20	16	17	22	24	30	26	21	17	18
17	20	18	18	16	16	21	24	29	26	21	17	20
18	20	19	18	16	17	21	23	29	27	21	17	19
19	20	19	18	16	17	22	22	30	26	20	18	18
20	19	19	18	16	17	22	23	32	26	20	17	18
21	18	18	18	16	17	21	24	29	25	20	17	17
22	18	19	18	15	17	20	26	27	24	19	17	17
23	18	19	18	15	17	20	26	27	26	19	15	17
24	18	19	18	15	17	20	25	28	26	19	16	17
25	18	18	18	15	18	23	26	28	26	19	16	17
26	19	17	18	15	18	21	26	28	25	19	15	17
27	19	18	18	15	18	19	25	29	25	19	17	18
28	22	20	18	17	18	18	25	28	25	19	17	18
29	20	20	18	15	---	19	26	28	25	18	16	17
30	21	19	18	16	---	19	25	26	25	18	16	16
31	20	---	18	16	---	19	---	27	---	18	16	---
TOTAL	588	568	596	518	478	671	697	860	806	655	519	515
MEAN	19.0	18.9	19.2	16.7	17.1	21.6	23.2	27.7	26.9	21.1	16.7	17.2
MAX	22	23	38	18	18	42	26	32	29	30	18	20
MIN	18	17	18	15	16	18	19	24	24	18	15	14
AC-FT	1170	1130	1180	1030	948	1330	1380	1710	1600	1300	1030	1020

CAL YR 1974 TOTAL 8721 MEAN 23.9 MAX 57 MIN 17 AC-FT 17300
WTR YR 1975 TOTAL 7471 MEAN 20.5 MAX 42 MIN 14 AC-FT 14820

Peak discharge (base, 100 ft^3/s).--Mar. 8 (1600) 138 ft^3/s.

11055500 PLUNGE CREEK NEAR EAST HIGHLANDS, CALIF.

LOCATION.--Lat 34°07'06", long 117°08'27", in SW¼NE¼NE¼ sec.1, T.1 S., R.3 W., San Bernardino County, on left bank at mouth of canyon at crossing of North Fork ditch siphon, 1.8 mi (2.9 km) northeast of East Highlands.

DRAINAGE AREA.--16.9 mi^2 (43.8 km^2).

PERIOD OF RECORD.--January 1919 to current year; combined records of creek and diversions, March 1951 to current year.

GAGE.--Water-stage recorder in concrete shelter; water-stage recorder and weir on upper diversion; water-stage recorder and concrete-lined canal on middle diversion; crest-stage gage and sharp-crested weir on lower diversion. Altitude of gage is 1,590 ft (485 m), from topographic map. Prior to Oct. 1, 1969, at datum 4.00 ft (1.219 m) higher.

AVERAGE DISCHARGE (Creek only).--56 years, 6.11 ft^3/s (0.173 m^3/s), 4,430 acre-ft/yr (5.46 hm^3/yr).
(Combined creek and diversions).--24 years, 7.57 ft^3/s (0.2144 m^3/s), 5,480 acre-ft/yr (6.76 hm^3/yr).

EXTREMES (Creek only).--Current year: Maximum discharge, 248 ft^3/s (7.02 m^3/s) Mar. 8 (gage height, 3.53 ft or 1.076 m); no flow many days.
Period of record: Maximum discharge, 5,340 ft^3/s (151 m^3/s) Mar. 2, 1938, on basis of slope-area measurement of maximum flow; no flow for part of most years.
(Combined flow).--Current year: Maximum discharge, 248 ft^3/s (7.02 m^3/s) Mar. 8; minimum daily, 0.64 ft^3/s (0.018 m^3/s) Sept. 25, 26.
Period of record: Maximum discharge, 4,770 ft^3/s (135 m^3/s) Dec. 6, 1966; no flow Nov. 12, 1964, Sept. 29, 1965.

REMARKS.--Records good. No regulation above station. Diversion from Alder Creek to Upper Plunge Creek area was active 1904-67. Diversions for irrigation are made at sites 0.5 mi (0.8 km), 1.0 mi (1.6 km), and 2.5 mi (4.0 km) above station. Water has been diverted above station for irrigation during entire period of record. Combined discharge of Plunge Creek and upper, middle, and lower diversions is given on following page. No flow in lower diversion since May 29, 1966. See schematic diagram of Santa Ana River basin.

DISCHARGE, IN CUBIC FEET PER SECOND, WATER YEAR OCTOBER 1974 TO SEPTEMBER 1975
MEAN VALUES

DAY	OCT	NOV	DEC	JAN	FEB	MAR	APR	MAY	JUN	JUL	AUG	SEP
1	.18	1.0	.74	2.2	1.3	1.6	19	3.4	.05	.01		0
2	.24	1.4	.74	2.2	1.2	.57	11	2.4	.06	.01		0
3	.52	1.0	.74	2.2	5.8	.35	9.5	2.4	.10	.01		0
4	.18	.81	31	2.2	6.0	.16	8.6	2.4	.10	0		0
5	.16	.68	10	2.2	6.4	.21	11	2.2	.06	.01		0
6	.16	.62	4.7	2.2	5.1	8.2	20	1.9	.05	.02		0
7	.14	.62	3.4	2.2	4.5	8.6	14	1.4	.03	.01		0
8	.14	.62	2.9	2.5	4.1	76	21	1.3	.05	.01		0
9	.16	.57	2.6	3.9	12	35	23	1.0	.09	0		0
10	.16	.57	2.5	2.9	15	32	19	.81	.68	0		0
11	.16	.57	2.5	2.8	7.7	26	16	.68	.68	0		.21
12	.16	.57	2.4	2.5	6.7	17	16	.57	.57	0		.47
13	.12	.52	2.2	2.4	5.1	14	17	.52	.57	0		.39
14	.10	.52	2.2	2.4	4.9	23	16	.35	.27	0		.27
15	.10	.52	2.2	2.2	4.5	15	12	.24	.06	0		.12
16	.10	.57	2.2	2.2	4.1	16	10	.27	.05	.01		.14
17	.12	.57	2.2	2.1	3.7	12	11	.21	.08	.01		.14
18	.12	.62	2.2	1.8	3.6	11	14	.16	.14	.01		.03
19	.18	.68	2.2	1.1	3.4	11	13	.18	.10	0		.03
20	.18	.68	2.2	1.1	3.1	9.5	13	4.4	.06	.05		.04
21	.18	.68	2.1	1.1	3.1	8.9	13	2.5	.04	.01		.04
22	.21	1.0	2.1	1.0	2.8	12	12	1.6	.06	0		0
23	.21	.95	2.1	1.0	2.6	9.5	9.8	1.2	.07	0		0
24	.24	.81	2.1	1.0	2.6	8.0	9.5	.95	0	0		0
25	.24	.74	2.1	1.0	2.6	13	9.8	.74	0	0		0
26	.27	.74	2.1	.95	2.4	10	9.5	.62	.01	0		0
27	.43	.74	2.1	1.0	1.6	8.0	8.0	.62	.01	0		0
28	3.3	.74	2.6	1.4	1.9	6.9	7.2	.47	.01	0		0
29	4.5	.74	2.9	1.2	---	6.2	6.7	.27	.01	0		0
30	3.1	.74	2.5	1.1	---	5.7	5.5	.08	.01	0		.18
31	1.4	---	2.2	1.4	---	7.4	---	.06	---	0		---
TOTAL	17.46	21.59	106.72	57.45	127.8	412.79	385.1	35.90	4.07	.17	0	2.06
MEAN	.56	.72	3.44	1.85	4.56	13.3	12.8	1.16	.14	.006	0	.069
MAX	4.5	1.4	31	3.9	15	76	23	4.4	.68	.05	0	.47
MIN	.10	.52	.74	.95	1.2	.16	5.5	.06	0	0	0	0
AC-FT	35	43	212	114	253	819	764	71	8.1	.3	0	4.1

CAL YR 1974 TOTAL 1491.34 MEAN 4.09 MAX 92 MIN 0 AC-FT 2960
WTR YR 1975 TOTAL 1171.11 MEAN 3.21 MAX 76 MIN 0 AC-FT 2320

Peak discharge (base, 130 ft^3/s).--Dec. 4 (0930) 136 ft^3/s (3.14 ft); Mar. 8 (1600) 248 ft^3/s (3.53 ft).

11055500 PLUNGE CREEK NEAR EAST HIGHLANDS, CALIF.--Continued

COMBINED DISCHARGE, IN CUBIC FEET PER SECOND, OF PLUNGE CREEK AND DIVERSIONS NEAR EAST HIGHLANDS, CALIF., WATER YEAR OCTOBER 1974 TO SEPTEMBER 1975

DAY	OCT	NOV	DEC	JAN	FEB	MAR	APR	MAY	JUN	JUL	AUG	SEP
1	1.1	1.9	1.7	2.2	1.3	2.8	19	5.8	3.3	1.5	1.0	.79
2	1.1	2.4	1.7	2.2	1.2	2.6	11	5.8	3.2	1.5	.95	.78
3	1.4	2.0	1.7	2.2	5.8	2.6	9.5	5.6	3.2	1.5	.90	.75
4	1.1	1.8	31	2.2	6.0	2.6	8.6	5.7	3.3	1.5	.86	.78
5	1.1	1.6	10	2.2	6.4	2.9	11	5.5	3.2	1.4	.78	.74
6	1.1	1.6	4.7	2.2	5.1	9.5	20	5.2	3.1	1.3	.86	.76
7	1.0	1.6	3.4	2.2	4.5	9.1	14	4.8	2.9	1.3	.87	.78
8	1.0	1.6	2.9	2.5	4.1	76	21	4.7	2.9	1.5	.89	.81
9	1.1	1.5	2.6	3.9	12	35	23	4.4	2.7	1.3	.92	.80
10	1.1	1.5	2.5	2.9	15	32	19	4.0	2.6	1.4	.90	.80
11	1.1	1.5	2.5	2.8	7.7	26	16	3.8	2.5	1.4	.88	1.0
12	1.1	1.5	2.4	2.5	6.7	17	16	3.9	2.3	1.3	.88	1.3
13	1.0	1.5	2.2	2.4	5.1	14	17	3.7	2.3	1.3	.90	1.2
14	1.0	1.5	2.2	2.4	4.9	23	16	3.7	2.4	1.3	.89	1.0
15	1.0	1.4	2.2	2.2	4.5	15	12	3.7	2.4	1.2	.97	.84
16	1.0	1.5	2.2	2.2	4.1	16	10	3.9	2.5	1.2	.95	.87
17	1.0	1.5	2.2	2.1	3.7	12	11	3.7	2.9	1.2	.93	.90
18	1.0	1.6	2.2	1.8	3.6	11	14	3.7	3.2	1.3	.93	.79
19	1.1	1.6	2.2	1.1	3.4	11	13	3.8	3.2	.97	.95	.78
20	1.1	1.6	2.2	1.1	3.1	10	13	8.3	2.9	1.3	.98	.79
21	1.1	1.6	2.1	1.1	3.1	9.3	13	6.3	2.5	1.2	.94	.73
22	1.1	2.0	2.1	1.0	2.8	12	12	5.3	2.2	1.1	.87	.67
23	1.1	1.9	2.1	1.0	2.6	9.5	9.8	4.8	2.1	1.1	.82	.66
24	1.1	1.8	2.1	1.0	2.6	8.0	9.5	4.5	2.0	1.1	.81	.65
25	1.1	1.7	2.1	1.0	2.6	13	9.8	4.1	2.1	1.0	.81	.64
26	1.2	1.7	2.1	.95	2.6	10	9.5	3.9	1.8	1.0	.70	.64
27	1.3	1.7	2.1	1.0	2.4	8.0	8.0	3.9	1.7	1.0	.70	.65
28	3.6	1.7	2.6	1.4	2.5	6.9	7.2	3.7	1.7	1.1	.78	.66
29	4.5	1.7	2.9	1.2	---	6.2	6.7	3.4	1.6	1.1	.84	.69
30	3.1	1.7	2.5	1.1	---	5.7	6.2	3.3	1.6	1.1	.82	.87
31	1.8	---	2.2	1.4	---	7.4	---	3.3	---	1.0	.80	---
TOTAL	42.5	50.2	109.6	57.45	129.4	426.1	385.8	140.2	76.3	38.47	27.08	24.12
MEAN	1.37	1.67	3.54	1.85	4.62	13.7	12.9	4.52	2.54	1.24	.87	.80
MAX	4.5	2.4	31	3.9	15	76	23	8.3	3.3	1.5	1.0	1.3
MIN	1.0	1.4	1.7	.95	1.2	2.6	6.2	3.3	1.6	.97	.70	.64
AC-FT	84	100	217	114	257	845	765	278	151	76	54	48

CAL YR 1974 TOTAL 1883.41 MEAN 5.16 MAX 92 MIN .75 AC-FT 3740
WTR YR 1975 TOTAL 1507.22 MEAN 4.13 MAX 76 MIN .64 AC-FT 2990

Peak discharge (base, 130 ft^3/s).--Dec. 4 (0930) 136 ft^3/s; Mar. 8 (1600) 248 ft^3/s.

11055800 CITY CREEK NEAR HIGHLAND, CALIF.

LOCATION.--Lat 34°08'38", long 117°11'16", in SE¼SW¼NW¼ sec.27, T.1 N., R.3 W., San Bernardino County, on right bank 0.6 mi (1.0 km) upstream from Highland Avenue, and 1.5 mi (2.4 km) northeast of Highland.

DRAINAGE AREA.--19.6 mi^2 (50.8 km^2).

PERIOD OF RECORD.--October 1919 to current year; combined records of creek and canal, June 1924 to current year.

GAGE.--Water-stage recorder on creek; water-stage recorder on canal. Altitude of gage is 1,580 ft (482 m), from topographic map. Prior to Mar. 1, 1939, at site 0.2 mi (0.3 km) downstream at different datum.

AVERAGE DISCHARGE (Creek only).--56 years, 8.67 ft^3/s (0.246 m^3/s), 6,280 acre-ft/yr (7.74 hm^3/yr).
(Combined).--51 years, 10.3 ft^3/s (0.292 m^3/s), 7,460 acre-ft/yr (9.20 hm^3/yr).

EXTREMES (Creek only).--Current year: Maximum discharge, 103 ft^3/s (2.92 m^3/s) Mar. 8 (gage height, 4.46 ft or 1.359 m); no flow Oct. 1, 2.
Period of record: Maximum discharge, 7,000 ft^3/s (198 m^3/s) Feb. 25, 1969 (gage height, 9.39 ft or 2.862 m), from rating curve extended above 580 ft^3/s (16.4 m^3/s) on basis of slope-area measurement at gage height 8.83 ft (2.691 m); no flow for several months in some years.
(Combined).--Current year: Maximum discharge, 103 ft^3/s (2.92 m^3/s) Mar. 8; minimum daily, 0.21 ft^3/s (0.006 m^3/s) Sept. 25, 26.
Period of record: Maximum discharge, 7,000 ft^3/s (198 m^3/s) Feb. 25, 1969; no flow at times in some years.

REMARKS.--Records fair. No regulation above station. City Creek Water Co.'s canal has diverted from point 0.5 mi (0.8 km) above station for irrigation throughout period of record. See schematic diagram of Santa Ana River basin. Combined discharge of City Creek and canal is given on following page.

DISCHARGE, IN CUBIC FEET PER SECOND, WATER YEAR OCTOBER 1974 TO SEPTEMBER 1975
MEAN VALUES

DAY	OCT	NOV	DEC	JAN	FEB	MAR	APR	MAY	JUN	JUL	AUG	SEP
1	0	2.6	.33	2.5	2.8	3.1	11	7.9	1.0	1.2	.28	.05
2	0	4.0	.33	2.4	2.8	3.1	7.2	7.5	1.0	1.2	.20	.05
3	.01	2.6	1.2	2.4	7.2	2.9	6.9	7.4	.92	.37	.16	.04
4	.02	2.2	26	2.4	7.7	2.9	6.9	7.6	.84	.35	.13	.04
5	.02	1.9	14	2.6	9.3	3.5	9.2	7.1	.84	.31	.10	.04
6	.01	1.9	4.9	2.6	7.3	14	19	6.5	.84	.28	.07	.05
7	.02	1.8	3.2	2.8	6.2	9.2	13	5.4	.79	.26	.04	.05
8	.03	1.9	2.6	3.4	5.9	43	14	5.3	.81	.29	.03	.10
9	.02	1.8	2.5	5.8	12	27	23	5.2	.81	.30	.03	.18
10	.03	1.8	2.3	3.8	16	24	21	5.6	.77	.26	.03	.21
11	.03	1.6	2.2	3.2	9.6	20	17	5.6	1.3	.23	.03	.21
12	.03	1.6	2.0	3.0	6.6	16	16	5.5	.77	.21	.03	.20
13	.03	1.6	1.9	3.0	5.9	14	15	5.5	.75	.23	.03	.18
14	.02	1.6	1.9	2.4	5.9	25	15	5.2	.74	.23	.03	.15
15	.02	.84	1.9	1.0	5.8	17	14	4.8	.65	.22	.04	.12
16	.02	.18	1.8	1.0	4.7	18	13	4.8	.71	.22	.03	.10
17	.02	.18	1.8	1.0	4.2	14	16	4.8	.76	.24	.04	.10
18	.02	.18	1.8	.90	4.1	12	14	5.2	.84	.28	.06	.10
19	.04	.18	1.8	.90	3.9	11	13	5.9	.78	.27	.09	.11
20	.05	.15	1.8	.90	3.7	10	12	8.8	.73	.23	.13	.12
21	.06	.15	1.8	.70	3.6	8.9	11	5.1	.63	.21	.16	.11
22	.06	.46	1.8	.20	3.4	11	11	6.5	.55	.17	.13	.10
23	.07	.57	1.9	.05	3.1	8.2	10	4.4	.50	.14	.09	.09
24	.06	1.3	1.9	.05	2.8	7.2	9.7	1.7	.49	.14	.07	.08
25	.06	1.4	1.9	.10	2.9	10	11	1.5	.48	.13	.07	.08
26	.10	1.4	1.9	1.5	3.3	8.5	10	1.4	.70	.12	.06	.08
27	.15	.92	2.2	2.8	3.3	7.2	9.1	1.3	.80	.14	.05	.09
28	13	.13	3.0	2.8	3.2	6.6	8.9	1.2	.90	.19	.05	.10
29	7.8	.25	3.0	2.7	---	6.0	8.2	1.1	1.4	.24	.06	.12
30	5.2	.33	2.3	2.7	---	5.4	7.8	1.1	1.3	.38	.06	.14
31	2.8	---	2.4	2.7	---	6.0	---	1.0	---	.35	.06	---
TOTAL	29.80	37.52	100.36	64.30	157.2	374.7	372.9	147.9	24.40	9.39	2.44	3.19
MEAN	.96	1.25	3.24	2.07	5.61	12.1	12.4	4.77	.81	.30	.079	.11
MAX	13	4.0	26	5.8	16	43	23	8.8	1.4	1.2	.28	.21
MIN	0	.13	.33	.05	2.8	2.9	6.9	1.0	.48	.12	.03	.04
AC-FT	59	74	199	128	312	743	740	293	48	19	4.8	6.3

CAL YR 1974 TOTAL 1484.88 MEAN 4.07 MAX 80 MIN 0 AC-FT 2950
WTR YR 1975 TOTAL 1324.10 MEAN 3.63 MAX 43 MIN 0 AC-FT 2630

Peak discharge (base, 150 ft^3/s).--No peak above base.

11055800 CITY CREEK NEAR HIGHLAND, CALIF.--Continued

COMBINED DISCHARGE, IN CUBIC FEET PER SECOND, OF CITY CREEK AND CITY CREEK WATER CO.'S CANAL NEAR HIGHLAND, CALIF., WATER YEAR OCTOBER 1974 TO SEPTEMBER 1975

DAY	OCT	NOV	DEC	JAN	FEB	MAR	APR	MAY	JUN	JUL	AUG	SEP
1	.56	2.6	2.0	2.5	2.8	3.1	11	7.9	3.7	1.3	.53	.43
2	.73	4.0	2.0	2.4	2.8	3.1	7.2	7.5	3.6	1.4	.40	.43
3	.89	2.6	2.3	2.4	7.2	2.9	6.9	7.4	3.8	1.2	.34	.44
4	1.0	2.2	26	2.4	7.7	2.9	6.9	7.6	3.8	1.2	.29	.44
5	1.1	1.9	14	2.6	9.3	3.5	9.2	7.4	3.5	1.1	.32	.44
6	1.0	1.9	4.9	2.6	7.3	14	19	7.5	3.3	.99	.34	.45
7	.96	1.8	3.2	2.8	6.2	9.2	13	6.9	3.2	.89	.28	.45
8	1.2	1.9	2.6	3.4	5.9	43	14	6.9	3.3	.98	.26	.55
9	1.2	1.8	2.5	5.8	12	27	23	6.6	3.2	.97	.28	.70
10	1.1	1.8	2.3	3.8	16	24	21	6.4	2.9	.86	.32	.91
11	1.1	1.6	2.2	3.2	9.6	20	17	6.4	2.8	.78	.29	1.0
12	.93	1.6	2.0	3.0	6.6	16	16	6.4	2.4	.72	.28	.98
13	.82	1.6	1.9	3.0	5.9	14	15	6.2	2.4	.76	.32	.85
14	.80	1.6	1.9	3.0	5.9	25	15	6.0	2.4	.76	.36	.66
15	.76	1.6	1.9	3.0	5.8	17	14	6.0	2.5	.72	.40	.57
16	.75	1.5	1.8	3.0	4.7	18	13	6.0	2.8	.70	.46	.52
17	.72	1.5	1.8	3.0	4.2	14	16	6.0	3.4	.77	.48	.53
18	.77	1.6	1.8	3.0	4.1	12	14	6.0	4.2	.88	.49	.53
19	.84	1.6	1.8	2.9	3.9	11	13	6.6	4.2	.85	.55	.58
20	.94	1.6	1.8	2.9	3.7	10	12	10	3.9	.71	.70	.59
21	1.1	1.7	1.8	2.9	3.6	8.9	11	6.4	3.3	.62	.81	.46
22	1.1	2.6	1.8	2.9	3.4	11	11	7.1	2.8	.56	.62	.32
23	1.2	1.9	1.9	3.1	3.1	8.2	10	6.8	2.5	.50	.52	.27
24	1.3	1.9	1.9	3.1	2.8	7.2	9.7	5.4	2.5	.50	.48	.23
25	1.2	1.9	1.9	3.0	2.9	10	11	5.1	2.4	.47	.47	.21
26	1.5	1.9	1.9	2.9	3.3	8.5	10	4.9	2.3	.43	.46	.21
27	1.8	1.8	2.2	2.8	3.3	7.2	9.1	4.7	2.2	.52	.45	.25
28	14	1.6	3.0	2.8	3.2	6.6	8.9	4.3	1.8	.68	.43	.33
29	7.8	1.9	3.0	2.8	---	6.0	8.2	3.9	1.5	.83	.44	.45
30	5.2	2.0	2.3	2.8	---	5.4	7.8	3.8	1.4	.71	.43	.56
31	2.8	---	2.4	2.8	---	6.0	---	3.7	---	.65	.43	---
TOTAL	57.17	57.5	104.8	92.6	157.2	374.7	372.9	193.8	88.0	25.01	13.23	15.34
MEAN	1.84	1.92	3.38	2.99	5.61	12.1	12.4	6.25	2.93	.81	.43	.51
MAX	14	4.0	26	5.8	16	43	23	10	4.2	1.4	.81	1.0
MIN	.56	1.5	1.8	2.4	2.8	2.9	6.9	3.7	1.4	.43	.26	.21
AC-FT	113	114	208	184	312	743	740	384	175	50	26	30

CAL YR 1974 TOTAL 1716.37 MEAN 4.70 MAX 80 MIN .20 AC-FT 3400
WTR YR 1975 TOTAL 1552.25 MEAN 4.25 MAX 43 MIN .21 AC-FT 3080

Peak discharge (base, 150 ft^3/s).--No peak above base.

11056500 LITTLE SAN GORGONIO CREEK NEAR BEAUMONT, CALIF.

LOCATION.--Lat 34°01'45", long 116°56'43", in NW¼SW¼NW¼ sec.1, T.2 S., R.1 W., San Bernardino County, on right bank at upstream side of bridge on Oak Glen Road, 3.0 mi (4.8 km) upstream from Wallace Creek, and 7 mi (11 km) north of Beaumont.

DRAINAGE AREA.--3.23 mi^2 (8.37 km^2).

PERIOD OF RECORD.--October 1948 to current year.

GAGE.--Water-stage recorder and concrete control. Altitude of gage is 4,320 ft (1,317 m), from topographic map. Prior to July 30, 1970, at site 42 ft (13 m) downstream on left bank at same datum.

AVERAGE DISCHARGE.--27 years, 0.45 ft^3/s (0.0127 m^3/s), 326 acre-ft/yr (402,000 m^3/yr).

EXTREMES.--Current year: Maximum discharge, 4.7 ft^3/s (0.13 m^3/s) Oct. 16 (gage height, 3.62 ft or 1.103 m); no flow many days.
Period of record: Maximum discharge, 11,000 ft^3/s (312 m^3/s) Feb. 25, 1969 (gage height, 8.50 ft or 2.591 m, from floodmarks), from rating curve extended above 32 ft^3/s (0.906 m^3/s) on basis of slope-area measurements at gage heights 2.18 ft (0.665 m), 3.45 ft (1.052 m), and 8.50 ft (2.591 m); no flow for several months in most years.

REMARKS.--Records poor. No regulation above station. Several small diversions above station for irrigation. See schematic diagram of Santa Ana River basin.

DISCHARGE, IN CUBIC FEET PER SECOND, WATER YEAR OCTOBER 1974 TO SEPTEMBER 1975
MEAN VALUES

DAY	OCT	NOV	DEC	JAN	FEB	MAR	APR	MAY	JUN	JUL	AUG	SEP
1	.17	.02	0	.01	.02	.01	.24	.08	.16	.11	.05	
2	.17	.02	.01	.01	.02	.01	.16	.08	.14	.11	.08	
3	.17	.01	0	.01	.04	.01	.14	.08	.14	.11	.05	
4	.16	0	.12	.01	.06	.01	.14	.08	.14	.10	.02	
5	.23	0	.01	.01	.02	.01	.16	.08	.10	.12	0	
6	.15	0	.01	.01	.02	.27	.26	.08	.08	.19	0	
7	.17	0	.01	.01	.02	.18	.23	.08	.09	.19	0	
8	.21	0	.01	.01	.02	.61	.23	.08	.10	.13	0	
9	.18	0	.01	.01	.12	.27	.30	.08	.09	.07	0	
10	.09	0	.01	.01	.07	.27	.22	.08	.08	.25	0	
11	.10	0	.01	.01	.04	.21	.25	.08	.10	.19	0	
12	.10	0	0	.01	.04	.16	.21	.08	.14	.15	0	
13	.90	0	0	.01	.06	.16	.18	.08	.18	.09	0	
14	.64	0	.01	.01	.08	.18	.16	.08	.18	.11	0	
15	.12	0	0	.01	.04	.14	.14	.08	.12	.18	0	
16	.05	0	0	.01	.02	.12	.14	.08	.12	.17	0	
17	.03	0	0	.01	.02	.12	.15	.08	.16	.18	0	
18	.02	0	.01	.01	.01	.10	.17	.08	.21	.14	0	
19	.01	0	0	.01	.06	.09	.16	.08	.21	.12	0	
20	0	0	0	.01	.04	.09	.14	.08	.18	.14	0	
21	0	0	0	.01	.02	.09	.12	.18	.17	.10	0	
22	0	0	.01	.01	.01	.16	.11	.18	.16	.07	0	
23	0	.01	.01	.01	.01	.14	.10	.18	.15	.07	0	
24	0	0	0	.01	.01	.12	.10	.16	.14	.06	0	
25	0	0	0	.01	.01	.14	.10	.18	.14	.06	0	
26	0	.01	0	.01	.01	.14	.09	.16	.13	.05	0	
27	0	.01	0	.02	.01	.14	.09	.21	.13	.06	0	
28	.01	.01	0	.02	.01	.14	.09	.16	.12	.04	0	
29	.01	.01	.05	.02	---	.14	.09	.14	.12	.04	0	
30	.01	.01	.01	.02	---	.14	.08	.12	.12	.06	0	
31	0	---	.01	.02	---	.14	---	.14	---	.06	0	---
TOTAL	3.70	.11	.31	.36	.91	4.51	4.75	3.41	4.10	3.52	.20	0
MEAN	.12	.004	.010	.012	.033	.15	.16	.11	.14	.11	.007	0
MAX	.90	.02	.12	.02	.12	.61	.30	.21	.21	.25	.08	0
MIN	0	0	0	.01	.01	.01	.08	.08	.08	.04	0	0
AC-FT	7.3	.2	.6	.7	1.8	8.9	9.4	6.8	8.1	7.0	.4	0

CAL YR 1974 TOTAL 70.51 MEAN .19 MAX 6.5 MIN 0 AC-FT 140
WTR YR 1975 TOTAL 25.88 MEAN .071 MAX .90 MIN 0 AC-FT 51

Peak discharge (base, 10 ft^3/s).--No peak above base.

11057000 SAN TIMOTEO CREEK NEAR REDLANDS, CALIF.

LOCATION.--Lat 34°01'58", long 117°12'28", in NE¼NE¼NE¼ sec.5, T.2 S., R.3 W., San Bernardino County, on upstream side of left end of county highway bridge, 2.0 mi (3.2 km) southwest of Redlands, and 3.4 mi (5.5 km) downstream from Yucaipa Creek.

DRAINAGE AREA.--119 mi^2 (308 km^2).

PERIOD OF RECORD.--October 1926 to September 1968, October 1973 to current year.

GAGE.--Water-stage recorder. Altitude of gage is 1,280 ft (390 m), from topographic map. Prior to Oct. 30, 1934, at site 2 mi (3.2 km) upstream at different datum.

AVERAGE DISCHARGE.--44 years (1926-68, 1973-75), 1.34 ft^3/s (0.0379 m^3/s), 971 acre-ft/yr (1.20 hm^3/yr).

EXTREMES.--Current year: Maximum discharge, 345 ft^3/s (9.77 m^3/s) Mar. 8 (gage height, 4.20 ft or 1.280 m), from rating curve extended above 100 ft^3/s (2.83 m^3/s); no flow most of year.
Period of record: Maximum discharge, 7,460 ft^3/s (211 m^3/s) Mar. 2, 1938, result of slope-area measurement of maximum flow; no flow for many months in each year.

REMARKS.--Records poor. No regulation above station. Pumping above station for irrigation. See schematic diagram of Santa Ana River basin.

DISCHARGE, IN CUBIC FEET PER SECOND, WATER YEAR OCTOBER 1974 TO SEPTEMBER 1975
MEAN VALUES

DAY	OCT	NOV	DEC	JAN	FEB	MAR	APR	MAY	JUN	JUL	AUG	SEP
1	0		0		0	0	0					
2	0		0		0	0	0					
3	0		9.0		0	0	0					
4	0		18		5.0	0	0					
5	0		0		0	0	0					
6	0		0		0	43	0					
7	0		0		0	0	0					
8	0		0		0	67	0					
9	0		0		0	1.3	0					
10	0		0		0	20	5.7					
11	0		0		0	.14	3.7					
12	0		0		0	0	0					
13	0		0		0	0	0					
14	0		0		0	0	0					
15	0		0		0	0	0					
16	0		0		0	0	0					
17	0		0		0	0	0					
18	0		0		0	0	0					
19	0		0		0	0	0					
20	0		0		0	0	0					
21	0		0		0	0	0					
22	0		0		0	0	0					
23	0		0		0	0	0					
24	0		0		0	0	0					
25	0		0		0	0	0					
26	0		0		0	0	0					
27	0		0		0	0	0					
28	8.0		0		0	0	0					
29	0		0		---	0	0					
30	0		0		---	0	0					
31	0	---	0		---	0	---		---			---
TOTAL	8.0	0	27.0	0	5.0	131.44	9.4	0	0	0	0	0
MEAN	.26	0	.87	0	.18	4.24	.31	0	0	0	0	0
MAX	8.0	0	18	0	5.0	67	5.7	0	0	0	0	0
MIN	0	0	0	0	0	0	0	0	0	0	0	0
AC-FT	16	0	54	0	9.9	261	19	0	0	0	0	0

CAL YR 1974 TOTAL 172.26 MEAN .47 MAX 50 MIN 0 AC-FT 342
WTR YR 1975 TOTAL 180.84 MEAN .50 MAX 67 MIN 0 AC-FT 359

Peak discharge (base, 150 ft^3/s).--Mar. 6 (0900) 285 ft^3/s (4.10 ft); Mar. 8 (1630) 345 ft^3/s (4.20 ft).

11057500 SAN TIMOTEO CREEK NEAR LOMA LINDA, CALIF.

LOCATION.--Lat 34°03'49", long 117°16'19", in San Bernardino Grant, San Bernardino County, on right bank 50 ft (15 m) downstream from west bound lane of Interstate Highway 10, and 0.8 mi (1.3 km) northwest of Loma Linda.

DRAINAGE AREA.--125 mi^2 (324 km^2).

PERIOD OF RECORD.--October 1954 to September 1965, February 1968 to September 1975 (discontinued).

GAGE.--Water-stage recorder. Datum of gage is 1,015.89 ft (309.643 m) above mean sea level. Prior to February 1968, at site 0.5 mi (0.8 km) downstream at different datum.

AVERAGE DISCHARGE.--18 years (1954-65, 1968-75), 2.50 ft^3/s (0.0708 m^3/s), 1,810 acre-ft/yr (2.23 hm^3/yr).

EXTREMES.--Current year: Maximum discharge, 425 ft^3/s (12.0 m^3/s) Mar. 8 (gage height, 3.95 ft or 1.204 m); no flow Dec. 9-14.
Period of record: Maximum discharge, 15,000 ft^3/s (425 m^3/s) Feb. 25, 1969 (gage height, 8.2 ft or 2.50 m, from floodmark), from rating curve extended above 2,100 ft^3/s (59.5 m^3/s) on basis of slope-conveyance measurement of maximum flow; no flow many days in some years.

REMARKS.--Records fair. No regulation above station. Natural flow affected by pumping and return flow from irrigated areas.

DISCHARGE, IN CUBIC FEET PER SECOND, WATER YEAR OCTOBER 1974 TO SEPTEMBER 1975
MEAN VALUES

DAY	OCT	NOV	DEC	JAN	FEB	MAR	APR	MAY	JUN	JUL	AUG	SEP
1	.19	.19	.33	.80	.96	.05	.25	.25	.65	.65	.06	.73
2	.19	.96	.22	.42	1.3	.07	.14	.33	.53	.42	.07	.50
3	.14	.25	.42	.42	5.2	.10	.10	.19	.96	.80	.13	.80
4	.49	.53	31	.53	1.1	.07	.10	.19	.80	1.6	.38	.85
5	.80	.33	1.8	.53	.53	.42	2.5	.42	.96	1.6	.50	.83
6	.53	.25	.53	.42	.14	27	.65	.65	1.3	.80	.30	.67
7	.80	.53	.20	.42	.10	.53	.25	.65	.80	.80	.13	.72
8	.96	.65	.05	.42	.10	95	2.0	.33	.53	1.3	.07	.78
9	.65	.53	0	.42	1.1	2.1	1.9	.42	.53	1.3	.07	.78
10	.65	.42	0	.42	.73	15	.19	.33	.80	1.6	.22	.80
11	.25	.42	0	.42	.14	3.8	3.1	.42	1.6	.80	.06	.83
12	.25	.25	0	.42	.14	.19	.33	.53	.80	.20	.06	.85
13	.33	.14	0	.33	.14	.19	.25	.65	1.3	.53	.13	.88
14	.14	.13	0	.19	.33	1.5	.19	.33	.80	.33	.70	.85
15	.33	.53	.07	.25	.10	.19	.33	.19	.96	.33	.70	.43
16	.53	.42	.14	.14	.14	.53	.33	.53	.65	.25	1.3	.56
17	.53	.65	.14	.14	.10	.14	.80	.33	.65	.42	2.3	.80
18	.33	.53	.14	.19	.10	.14	.33	.33	1.1	.14	.96	.75
19	.33	.33	.10	.53	.10	.14	.33	.80	.80	.50	.66	.56
20	.19	.23	.10	.65	.10	.14	.33	.96	.53	.22	.12	.30
21	.42	.33	.10	.80	.07	.07	.19	.53	.42	.13	.30	.30
22	.53	.53	.06	.33	.10	.65	.19	.53	.42	.07	.30	.13
23	.33	.65	.03	.25	.14	.19	.14	.33	.42	.05	.70	.38
24	.14	.65	.33	.33	1.1	.14	.19	.25	.80	.04	.94	.72
25	.25	.65	.80	.65	.42	.25	.25	.33	.65	.05	.50	.82
26	.33	.53	.80	.65	.25	.19	.33	.25	.53	.02	.70	.78
27	.25	.33	.25	.65	.25	.14	.25	.42	.53	.01	1.7	.78
28	.80	.25	2.0	.80	.25	.10	.33	.42	.65	.02	.50	.78
29	.14	.19	1.9	.65	---	.19	.25	.25	.42	.02	.71	.75
30	.25	.53	.42	1.5	---	.19	.19	.25	.80	.02	.50	.73
31	.07	---	.65	.96	---	.19	---	.65	---	.02	.30	---
TOTAL	12.12	12.91	42.58	15.63	15.23	149.60	16.71	13.04	22.69	15.04	16.07	20.44
MEAN	.39	.43	1.37	.50	.54	4.83	.56	.42	.76	.49	.52	.68
MAX	.96	.96	31	1.5	5.2	95	3.1	.96	1.6	1.6	2.3	.88
MIN	.07	.13	0	.14	.07	.05	.10	.19	.42	.01	.06	.13
AC-FT	24	26	84	31	30	297	33	26	45	30	32	41

CAL YR 1974 TOTAL 564.82 MEAN 1.55 MAX 99 MIN 0 AC-FT 1120
WTR YR 1975 TOTAL 352.06 MEAN .96 MAX 95 MIN 0 AC-FT 698

Peak discharge (base, 150 ft^3/s)

Date	Time	G.H.	Discharge	Date	Time	G.H.	Discharge
12-4	0630	3.60	160	3-8	1800	3.95	425
3-6	1130	3.84	332				

NOTE.--Stage-discharge relation indefinite July 12 to Sept. 30.

11058500 EAST TWIN CREEK NEAR ARROWHEAD SPRINGS, CALIF.

LOCATION.--Lat 34°10'45", long 117°15'53", in NW¼NE¼NE¼ sec.14, T.1 N., R.4 W., San Bernardino County, on right bank 100 ft (30 m) upstream from Del Rosa Water Co.'s diversion dam, 0.5 mi (0.8 km) south of Arrowhead Springs, and 1.0 mi (1.6 km) downstream from Strawberry Creek.

DRAINAGE AREA.--8.80 mi^2 (22.79 km^2).

PERIOD OF RECORD.--December 1919 to current year. Prior to October 1952, published as Strawberry Creek near Arrowhead Springs.

GAGE.--Water-stage recorder. Broad-crested weir since September 1938. Altitude of gage is 1,590 ft (485 m), from topographic map.

AVERAGE DISCHARGE.--55 years (1920-75), 4.42 ft^3/s (0.125 m^3/s), 3,200 acre-ft/yr (3.95 hm^3/yr).

EXTREMES.--Current year: Maximum discharge, 40 ft^3/s (1.13 m^3/s) Dec. 4 (gage height, unknown); minimum daily, 0.36 ft^3/s (0.010 m^3/s) Sept. 29, 30.
Period of record: Maximum discharge, 3,360 ft^3/s (95.2 m^3/s) Mar. 2, 1938, based on rainfall-runoff studies; practically no flow at times in 1929, 1931-35.

REMARKS.--Records fair. No regulation above station. One small diversion for domestic use above station. See schematic diagram of Santa Ana River basin.

DISCHARGE, IN CUBIC FEET PER SECOND, WATER YEAR OCTOBER 1974 TO SEPTEMBER 1975
MEAN VALUES

DAY	OCT	NOV	DEC	JAN	FEB	MAR	APR	MAY	JUN	JUL	AUG	SEP
1	.47	1.2	.98	1.5	2.8	1.8	4.6	3.3	2.0	1.1	.50	.37
2	.48	1.4	.98	1.5	2.8	2.0	3.2	3.5	1.9	1.1	.50	.37
3	.49	1.2	1.0	1.5	5.7	2.0	2.9	3.6	1.9	1.1	.41	.37
4	.49	1.1	12	1.5	4.5	2.0	2.8	3.6	1.8	1.0	.42	.39
5	.50	1.0	4.0	1.5	4.3	2.5	3.9	3.7	1.8	1.0	.41	.42
6	.50	.90	2.0	1.5	3.4	9.1	8.2	3.6	1.7	1.0	.41	.42
7	.50	.97	1.8	1.5	2.8	5.8	5.9	3.4	1.7	.96	.41	.45
8	.50	1.0	1.7	2.2	2.6	13	6.3	3.2	1.7	.94	.41	.51
9	.50	1.1	1.6	3.2	6.0	13	9.5	3.1	1.6	.83	.42	.47
10	.50	1.1	1.5	2.6	6.2	14	6.8	3.0	1.6	.78	.40	.44
11	.45	1.0	1.4	2.5	4.3	13	6.1	3.1	1.6	.69	.41	.44
12	.55	.83	1.3	2.4	3.4	9.3	5.7	2.9	1.6	.65	.45	.42
13	.65	.90	1.2	2.2	2.9	8.1	5.0	2.9	1.5	.78	.47	.41
14	.65	.97	1.2	2.0	2.8	13	4.7	2.8	1.5	.80	.43	.40
15	.77	.97	1.1	2.0	2.5	8.8	4.6	2.9	1.5	.74	.44	.39
16	.83	1.0	1.1	2.0	2.4	8.2	4.5	2.9	1.5	.72	.43	.39
17	.83	1.1	1.1	1.8	2.2	7.1	5.4	2.9	1.6	.69	.45	.39
18	.77	1.2	1.0	1.8	2.2	5.7	4.4	3.1	1.9	.72	.46	.38
19	.71	.97	1.0	2.0	2.1	4.8	3.8	3.1	2.0	.70	.43	.38
20	.71	.90	1.0	2.0	2.1	4.2	3.7	4.8	1.7	.67	.42	.38
21	.77	.97	1.0	2.0	2.1	4.0	3.6	3.5	1.6	.68	.43	.38
22	.71	1.4	1.0	2.1	2.0	5.4	3.5	3.8	1.4	.62	.40	.38
23	.71	1.2	1.0	2.0	2.0	4.3	3.5	3.5	1.3	.56	.41	.38
24	.65	1.2	1.0	1.8	1.9	3.8	3.3	3.3	1.3	.55	.42	.37
25	.65	1.2	1.0	2.1	2.0	5.7	4.3	3.0	1.2	.55	.43	.37
26	.65	1.1	1.0	2.1	2.0	4.8	3.7	2.8	1.2	.52	.45	.37
27	.60	1.0	1.0	2.4	1.9	4.1	3.5	2.6	1.2	.51	.40	.37
28	3.8	1.0	2.3	2.8	1.8	3.6	3.4	2.4	1.1	.53	.38	.37
29	2.5	.98	2.5	2.5	---	3.4	3.3	2.3	1.1	.53	.40	.36
30	1.8	.98	1.8	2.6	---	3.2	3.4	2.2	1.1	.52	.40	.36
31	1.2	---	1.6	3.1	---	3.3	---	2.1	---	.51	.40	---
TOTAL	25.89	31.84	54.16	64.7	83.7	193.0	137.5	96.9	46.6	23.05	13.20	11.90
MEAN	.84	1.06	1.75	2.09	2.99	6.23	4.58	3.13	1.55	.74	.43	.40
MAX	3.8	1.4	12	3.2	6.2	14	9.5	4.8	2.0	1.1	.50	.51
MIN	.45	.83	.98	1.5	1.8	1.8	2.8	2.1	1.1	.51	.38	.36
AC-FT	51	63	107	128	166	383	273	192	92	46	26	24

CAL YR 1974 TOTAL 823.20 MEAN 2.26 MAX 90 MIN .40 AC-FT 1630
WTR YR 1975 TOTAL 782.44 MEAN 2.14 MAX 14 MIN .36 AC-FT 1550

Peak discharge (base, 40 ft^3/s).--Dec. 4 (time and gage height unknown) 40 ft^3/s.

11058600 WATERMAN CANYON CREEK NEAR ARROWHEAD SPRINGS, CALIF.

LOCATION.--Lat 34°11'36", long 117°16'25", in NE¼NW¼NW¼ sec.11, T.1 N., R.4 W., San Bernardino County, on left bank 0.8 mi (1.3 km) northwest of Arrowhead Springs, and 1.3 mi (2.1 km) north of San Bernardino National Forest boundary.

DRAINAGE AREA.--4.65 mi^2 (12.04 km^2).

PERIOD OF RECORD.--November 1911 to October 1914 (published as "near San Bernardino"), December 1919 to current year.

GAGE.--Water-stage recorder. Broad-crested weir since September 1938. Datum of gage is 2,045.46 ft (623.456 m) above mean sea level. Prior to December 1919, nonrecording gage at site 300 ft (91 m) downstream at different datum.

AVERAGE DISCHARGE.--57 years (1912-14, 1920-75), 2.55 ft^3/s (0.0722 m^3/s), 1,850 acre-ft/yr (2.28 hm^3/yr).

EXTREMES.--Current year: Maximum discharge, 29 ft^3/s (0.82 m^3/s) Dec. 4 (gage height, 2.58 ft or 0.786 m); minimum daily, 0.10 ft^3/s (0.003 m^3/s) Sept. 23, 24.
Period of record (1920 to current year): Maximum discharge, 2,350 ft^3/s (66.6 m^3/s) Mar. 2, 1938, based on rainfall-runoff studies; no flow at times in most years.

REMARKS.--Records good. No regulation above station. One small diversion for domestic use above station. See schematic diagram of Santa Ana River basin.

DISCHARGE, IN CUBIC FEET PER SECOND, WATER YEAR OCTOBER 1974 TO SEPTEMBER 1975
MEAN VALUES

DAY	OCT	NOV	DEC	JAN	FEB	MAR	APR	MAY	JUN	JUL	AUG	SEP
1	.16	1.0	.52	.89	1.0	1.1	3.2	2.3	1.6	.89	.55	.24
2	.26	.97	.51	.85	1.0	1.1	2.3	2.3	1.6	.98	.47	.25
3	.30	.82	.51	.84	3.2	1.1	2.2	2.2	1.8	.98	.42	.23
4	.35	.71	6.0	.84	3.1	1.0	2.2	2.4	1.8	.98	.40	.22
5	.33	.69	2.4	.78	2.4	1.4	3.1	2.3	1.7	.89	.37	.22
6	.23	.67	1.6	.78	1.6	4.0	3.3	2.2	1.6	.78	.34	.17
7	.28	.66	1.2	.81	1.5	2.7	2.8	2.2	1.6	.73	.33	.21
8	.38	.66	1.2	1.4	1.4	7.0	3.4	2.2	1.6	.77	.32	.38
9	.34	.60	1.1	1.2	3.8	4.5	3.8	2.1	1.5	.64	.38	.36
10	.36	.56	1.1	1.1	3.2	5.5	3.4	2.0	1.5	.61	.40	.42
11	.38	.49	1.0	1.0	2.2	4.9	3.3	1.9	1.4	.58	.35	.44
12	.25	.46	.89	.98	1.8	4.2	3.3	1.8	1.4	.62	.40	.42
13	.21	.44	.81	.98	1.6	4.2	3.2	1.8	1.4	.68	.40	.35
14	.19	.45	.79	.98	1.7	5.3	3.4	1.8	1.4	.63	.38	.26
15	.17	.51	.77	.89	1.5	4.1	4.0	2.0	1.3	.61	.42	.19
16	.21	.51	.74	.89	1.4	4.4	3.6	2.0	1.4	.65	.40	.18
17	.21	.56	.76	.89	1.4	3.6	3.9	1.9	1.5	.74	.42	.19
18	.22	.64	.76	.89	1.3	3.2	3.4	1.8	1.8	.75	.41	.19
19	.27	.69	.79	.89	1.3	2.8	3.0	1.9	1.8	.73	.43	.20
20	.30	.67	.78	.89	1.3	2.7	2.9	4.2	1.6	.72	.52	.21
21	.33	.61	.81	.89	1.2	2.6	2.7	2.6	1.5	.64	.52	.13
22	.42	.74	.81	.89	1.2	3.7	2.8	2.5	1.2	.64	.41	.11
23	.57	.62	.81	.89	1.2	2.7	2.8	2.3	1.2	.61	.33	.10
24	.50	.58	.81	.89	1.2	2.5	2.7	2.1	1.2	.63	.28	.10
25	.42	.57	.81	.89	1.1	3.9	3.6	2.2	1.1	.59	.29	.12
26	.51	.55	.81	.89	1.1	2.9	2.7	1.9	1.1	.54	.30	.13
27	.41	.54	.81	1.0	1.1	2.7	2.4	2.0	1.1	.52	.31	.17
28	3.9	.54	1.2	1.1	1.1	2.5	2.4	1.8	1.0	.69	.31	.20
29	2.1	.53	1.3	1.0	---	2.4	2.3	1.7	.98	.67	.30	.16
30	1.4	.52	.98	1.1	---	2.2	2.3	1.7	.98	.66	.29	.13
31	1.0	---	.91	1.1	---	2.6	---	1.7	---	.61	.26	---
TOTAL	16.96	18.56	34.29	29.41	46.9	99.5	90.4	65.8	42.66	21.76	11.71	6.68
MEAN	.55	.62	1.11	.95	1.68	3.21	3.01	2.12	1.42	.70	.38	.22
MAX	3.9	1.0	6.0	1.4	3.8	7.0	4.0	4.2	1.8	.98	.55	.44
MIN	.16	.44	.51	.78	1.0	1.0	2.2	1.7	.98	.52	.26	.10
AC-FT	34	37	68	58	93	197	179	131	85	43	23	13

CAL YR 1974 TOTAL 554.69 MEAN 1.52 MAX 24 MIN .08 AC-FT 1100
WTR YR 1975 TOTAL 484.63 MEAN 1.33 MAX 7.0 MIN .10 AC-FT 961

Peak discharge (base, 35 ft^3/s).--No peak above base.

11059000 WARM CREEK FLOODWAY AT SAN BERNARDINO, CALIF.

LOCATION.--Lat 34°05'45", long 117°16'30", in San Bernardino Grant, San Bernardino County, on left bank 0.4 mi (0.6 km) upstream from Mill Street, and 1.8 mi (2.9 km) upstream from mouth.

DRAINAGE AREA.--47.8 mi^2 (123.8 km^2).

PERIOD OF RECORD.--January 1961 to current year. Prior to October 1965, published as "near San Bernardino."

GAGE.--Water-stage recorder. Altitude of gage is 1,000 ft (305 m), from topographic map. Prior to Dec. 21, 1967, at site 0.4 mi (0.6 km) downstream at different datum.

EXTREMES.--Current year: Maximum discharge, 1,100 ft^3/s (3.11 m^3/s) Dec. 4 (gage height, 4.13 ft or 1.259 m); no flow most of year.
Period of record: Maximum discharge, 9,600 ft^3/s (272 m^3/s) Feb. 25, 1969 (gage height, 6.75 ft or 2.057 m), from rating curve extended above 3,000 ft^3/s (85.0 m^3/s); no flow most of each year.

REMARKS.--Records fair except those less than 1 ft^3/s (0.028 m^3/s), which are poor. Flow partly regulated by percolation basins above Marshall Boulevard. Del Rosa Water Co. diverts from East Twin Creek for domestic use and irrigation. See schematic diagram of Santa Ana River basin.

DISCHARGE, IN CUBIC FEET PER SECOND, WATER YEAR OCTOBER 1974 TO SEPTEMBER 1975
MEAN VALUES

DAY	OCT	NOV	DEC	JAN	FEB	MAR	APR	MAY	JUN	JUL	AUG	SEP
1	0	.11	0	0	.24	.98	8.9	0	0	0	0	0
2	0	0	0	0	0	.29	1.2	0	0	0	0	0
3	0	0	0	0	67	0	.51	.20	.14	0	0	0
4	0	0	228	0	4.5	0	.32	2.1	.24	0	.18	0
5	0	0	11	0	5.0	2.1	17	0	0	0	0	0
6	0	0	1.2	0	2.7	75	21	0	0	0	0	0
7	0	0	.09	0	2.6	6.6	4.6	0	0	0	0	0
8	0	0	0	1.1	.58	151	12	0	0	0	0	2.7
9	0	0	0	1.2	44	29	23	0	0	0	0	0
10	0	0	0	0	19	97	8.4	0	0	0	0	0
11	0	0	0	0	1.7	20	7.9	0	0	0	0	0
12	0	0	0	0	0	7.4	6.9	0	.56	0	0	0
13	0	.21	0	0	0	7.4	4.2	0	0	0	0	0
14	0	0	0	0	8.2	37	3.0	0	0	0	0	0
15	0	0	0	0	.75	5.2	3.4	0	0	0	0	0
16	0	0	0	0	0	12	3.0	0	.40	0	0	.98
17	0	0	0	0	0	3.3	11	0	0	0	0	0
18	0	0	0	0	0	.72	3.4	0	0	0	.16	0
19	0	0	0	0	0	.05	1.8	0	0	0	0	0
20	0	0	0	0	0	0	.71	1.1	0	0	0	0
21	0	0	0	0	0	0	.19	.23	0	0	0	0
22	0	.27	0	0	.43	12	0	0	0	0	0	0
23	0	0	0	0	0	.56	.36	0	0	0	0	0
24	0	0	0	0	0	.41	0	0	0	.12	0	0
25	0	0	0	0	0	7.5	4.7	.64	0	0	0	0
26	0	0	0	0	.26	3.0	.99	0	0	0	0	0
27	0	0	0	.15	.80	1.7	.22	0	0	0	0	0
28	48	0	20	.30	1.4	1.4	0	.21	0	0	0	0
29	26	0	18	0	---	.64	0	.21	0	0	1.8	0
30	5.6	0	.24	1.8	---	.41	0	.52	0	0	.67	0
31	.05	---	0	.41	---	.32	---	0	---	0	0	---
TOTAL	79.65	.59	278.53	4.96	159.16	482.98	148.70	5.21	1.34	.12	2.81	3.68
MEAN	2.57	.020	8.98	.16	5.68	15.6	4.96	.17	.045	.004	.091	.12
MAX	48	.27	228	1.8	67	151	23	2.1	.56	.12	1.8	2.7
MIN	0	0	0	0	0	0	0	0	0	0	0	0
AC-FT	158	1.2	552	9.8	316	958	295	10	2.7	.2	5.6	7.3

CAL YR 1974 TOTAL 2065.22 MEAN 5.66 MAX 364 MIN 0 AC-FT 4100
WTR YR 1975 TOTAL 1167.73 MEAN 3.20 MAX 228 MIN 0 AC-FT 2320

11059100 SAN BERNARDINO WATER QUALITY CONTROL PLANT AT SAN BERNARDINO, CALIF.

LOCATION.--Lat 34°04'16", long 117°17'16", in San Bernardino Grant, San Bernardino County, at effluent end of chlorine contact chamber, 0.5 mi (0.8 km) upstream from Santa Ana River at E Street bridge.

PERIOD OF RECORD.--October 1972 to current year.

GAGE.--Water-stage recorder and concrete control. Datum of gage is 979.50 ft (298.552 m) above mean sea level (levels by city of San Bernardino).

EXTREMES.--Period of record: Maximum daily discharge, 30 ft^3/s (0.85 m^3/s) Jan. 7, 1974; minimum daily, 12 ft^3/s (0.34 m^3/s) Oct. 25, Nov. 4, 5, 7-9, 1972.

REMARKS.--Records good except those for period of no gage-height record, which are fair.

DISCHARGE, IN CUBIC FEET PER SECOND, WATER YEAR OCTOBER 1974 TO SEPTEMBER 1975

DAY	OCT	NOV	DEC	JAN	FEB	MAR	APR	MAY	JUN	JUL	AUG	SEP
1	23	24	22	21	23	23	23	24	23	23	24	22
2	23	23	24	23	22	23	23	24	25	23	23	24
3	24	23	22	24	25	23	23	22	25	22	22	24
4	23	24	28	22	24	23	23	22	25	21	23	25
5	23	24	24	22	23	23	23	25	25	21	23	25
6	22	23	23	23	23	23	23	24	25	20	24	23
7	24	23	23	23	23	23	23	24	24	23	24	22
8	23	23	22	23	22	23	23	24	23	23	24	25
9	23	22	24	23	23	23	23	23	26	23	24	25
10	23	21	24	23	24	23	23	22	25	23	23	25
11	23	24	23	23	23	23	23	22	25	23	25	24
12	22	23	23	22	23	23	23	25	25	22	24	24
13	22	23	22	23	23	23	23	24	25	21	24	23
14	24	23	22	22	23	23	23	24	24	24	24	23
15	23	23	22	22	23	23	23	24	23	23	24	23
16	23	22	23	23	21	23	23	23	25	23	23	23
17	23	22	22	23	24	23	23	24	24	23	22	23
18	20	23	22	22	24	23	23	23	24	23	25	23
19	23	23	23	21	23	23	23	25	24	22	24	23
20	23	23	22	23	22	23	23	25	25	21	24	23
21	23	23	22	23	23	23	23	25	23	23	24	23
22	21	23	21	23	22	23	23	24	22	23	24	23
23	23	23	23	22	22	23	23	24	25	23	23	23
24	24	22	23	23	23	23	23	23	24	23	21	23
25	24	23	20	22	23	23	23	21	24	24	23	24
26	21	23	23	22	23	23	23	23	25	23	23	24
27	22	23	23	23	23	23	23	24	24	22	24	23
28	25	22	22	23	23	23	23	24	23	24	23	23
29	24	23	22	23	------	23	23	24	23	24	23	25
30	24	22	23	23	------	23	23	24	23	25	21	25
31	23	------	23	23	------	23	------	24	------	24	20	------
TOTAL	711	686	705	701	643	713	690	733	726	705	722	708
MEAN	22.9	22.9	22.7	22.6	23.0	23.0	23.0	23.6	24.2	22.7	23.3	23.6
MAX	25	24	28	24	25	23	23	25	26	25	25	25
MIN	20	21	20	21	21	23	23	21	22	20	20	22
AC-FT	1,410	1,360	1,400	1,390	1,280	1,410	1,370	1,450	1,440	1,400	1,430	1,400

CAL YR 1974 TOTAL 8,606 MEAN 23.6 MAX 30 MIN 15 AC-FT 17,070
WTR YR 1975 TOTAL 8,443 MEAN 23.1 MAX 28 MIN 20 AC-FT 16,750

NOTE.--No gage-height record Feb. 25 to Apr. 25.

11059100 SAN BERNARDINO WATER QUALITY CONTROL PLANT AT SAN BERNARDINO, CALIF.--Continued

PERIOD OF RECORD.--Chemical analyses: October 1972 to current year.
Specific conductance: October 1972 to current year.

EXTREMES.--Current year:
Specific conductance: Maximum recorded, 1,260 micromhos May 23; minimum recorded, 786 micromhos Aug. 4.
Period of record:
Specific conductance: Maximum recorded, 1,260 micromhos May 23, 1975; minimum, 786 micromhos Aug. 4, 1975.

REMARKS.--Periods of missing record due to equipment malfunction.

WATER QUALITY DATA, WATER YEAR OCTOBER 1974 TO SEPTEMBER 1975

DATE	TIME	INSTANTANEOUS DISCHARGE (CFS)	DISSOLVED SOLIDS (RESIDUE AT 180 C) (MG/L)	SPECIFIC CONDUCTANCE (MICROMHOS)	TEMPERATURE (DEG C)
OCT.					
02...	1430	27	505	975	29.0
10...	1200	31	513	962	27.6
17...	1015	33	537	971	27.5
24...	1300	31	508	933	26.5
NOV.					
04...	1120	36	490	911	25.5
11...	1145	36	491	941	24.5
18...	1000	33	515	951	24.0
25...	0930	34	501	906	22.5
DEC.					
03...	1150	30	507	935	23.0
10...	1315	30	524	968	22.5
18...	0930	30	513	943	21.5
27...	0950	26	511	917	21.0
JAN.					
03...	1340	36	497	935	20.5
09...	1400	28	512	993	21.5
13...	1030	33	495	913	21.0
24...	1300	33	528	996	23.0
30...	1230	33	503	959	22.0
FEB.					
04...	1330	30	487	934	21.0
10...	1410	30	456	937	21.0
21...	1145	33	493	938	21.0
28...	1400	31	516	972	23.0
MAR.					
04...	1415	31	509	957	22.0
11...	1040	33	486	894	20.5
19...	1120	36	516	985	23.0
27...	0900	33	540	1000	22.0
APR.					
01...	1130	31	535	1020	21.5
09...	1145	31	492	969	22.0
16...	0900	32	517	962	22.0
23...	1530	28	537	1080	23.0
MAY					
01...	1100	31	539	992	23.5
07...	0905	27	532	1000	23.0
12...	1145	36	489	967	24.5
19...	1515	31	516	979	24.0
28...	1010	33	534	1050	25.0
JUNE					
03...	0900	27	536	1040	24.5
12...	1015	33	530	1010	26.5
16...	1200	37	492	981	25.8
25...	1015	30	549	1090	26.0
JULY					
02...	0900	28	550	1010	27.5
19...	1000	21	511	952	27.0
AUG.					
04...	1045	36	484	806	27.0
18...	1230	37	497	901	27.0
SEP.					
03...	0800	13	531	948	27.0
15...	1100	31	491	905	29.0

11059100 SAN BERNARDINO WATER QUALITY CONTROL PLANT AT SAN BERNARDINO, CALIF.--Continued

SPECIFIC CONDUCTANCE (MICROMHOS/CM AT 25 DEG. C), WATER YEAR OCTOBER 1974 TO SEPTEMBER 1975

	OCTOBER			NOVEMBER			DECEMBER			JANUARY		
DAY	MAX	MIN	MEAN	MAX	MIN	MEAN	MAX	MIN	MEAN	MAX	MIN	MEAN
1	1070	903	971	1090	978	1030	---	---	---	946	886	908
2	1050	927	971	1050	976	1020	---	---	---	1070	908	965
3	1110	972	1020	983	901	946	1040	935	1000	1170	935	1030
4	1060	911	984	1060	911	996	1000	832	931	1070	971	1030
5	1030	923	971	1080	946	1020	1070	899	982	1030	950	1000
6	960	894	932	1150	970	1070	1130	971	1060	1080	969	1020
7	1010	889	949	1130	982	1070	1100	942	1050	1070	963	1010
8	993	883	951	1190	998	1100	1120	1020	1070	1090	1020	1050
9	1020	927	988	1170	961	1050	1070	958	1030	1080	952	1010
10	1080	962	1020	1060	932	1000	1060	968	1030	1120	985	1050
11	1080	984	1040	1110	940	1020	1070	920	1020	1140	964	1060
12	1050	946	1000	1090	949	1030	1090	939	1030	1020	941	983
13	975	917	951	1110	955	1030	1050	974	1020	1100	905	981
14	1050	915	980	1110	990	1060	1060	937	1000	1170	930	1020
15	1090	945	1020	1080	946	1020	990	903	948	1120	958	1050
16	1070	946	1010	1070	964	1020	1040	866	961	1180	1030	1110
17	1090	971	1030	1000	924	970	1080	895	962	1150	988	1070
18	1070	956	1010	1040	920	981	1010	916	969	1120	975	1060
19	1050	969	1000	1120	932	1020	1020	951	994	1050	955	1010
20	982	929	964	1080	946	1020	1060	889	969	1110	944	1030
21	1000	921	968	1050	964	1010	1060	922	1010	1080	966	1030
22	1060	937	1000	---	---	---	985	929	963	1090	985	1050
23	1040	970	998	---	---	---	1040	933	976	1120	987	1070
24	1130	930	1000	---	---	---	988	886	944	1100	994	1060
25	1130	1020	1060	1010	896	958	955	841	878	1080	982	1040
26	1090	981	1040	1090	920	993	963	841	888	1050	950	995
27	1030	960	1000	1090	928	1010	934	860	918	1070	971	1020
28	1070	948	990	---	---	---	943	889	916	1120	968	1040
29	1070	935	985	---	---	---	937	871	914	1100	964	1050
30	1060	947	1010	---	---	---	994	876	927	1050	959	1010
31	1070	958	1010	---	---	---	1040	917	960	1030	928	986
MONTH	1130	883	994	1190	896	1020	1130	832	977	1180	886	1030

	FEBRUARY			MARCH			APRIL			MAY		
DAY	MAX	MIN	MEAN	MAX	MIN	MEAN	MAX	MIN	MEAN	MAX	MIN	MEAN
1	1000	915	964				---	---	---	1080	966	1020
2	971	922	953				---	---	---	1090	933	1020
3	969	909	935				---	---	---	1050	904	978
4	998	928	960				---	---	---	983	889	924
5	1040	908	965				---	---	---	1030	894	960
6	1090	949	1020				---	---	---	1020	929	982
7	1110	986	1060				---	---	---	1040	878	961
8	1090	1010	1050				---	---	---	1110	968	1040
9	1020	970	995				---	---	---	1160	954	1030
10	1050	924	977				---	---	---	1120	956	1030
11	1110	928	1010				---	---	---	1070	958	1010
12	1120	974	1040				---	---	---	1200	967	1060
13	1060	943	1010				---	---	---	1190	1000	1090
14	1030	939	984				---	---	---	1110	1030	1070
15	1120	990	1030				---	---	---	1080	954	1030
16	1030	922	953				---	---	---	1050	961	1010
17	1100	936	992				---	---	---	1020	913	975
18	1040	892	966				---	---	---	1010	907	965
19	1050	907	984				---	---	---	1100	931	1000
20	1030	930	1000				---	---	---	1100	967	1070
21	1050	938	996				---	---	---	1080	1000	1030
22	1030	920	956				---	---	---	1200	1030	1110
23	956	856	907				---	---	---	1260	1000	1130
24	1080	892	954				---	---	---	1160	1050	1110
25	1030	926	985				---	---	---	1110	982	1060
26	---	---	---				1050	986	1020	1170	1030	1080
27	---	---	---				998	907	955	1140	1050	1100
28	---	---	---				1070	907	981	1100	1020	1070
29	---	---	---				1080	926	1020	1150	1040	1080
30	---	---	---				1220	954	1060	1170	995	1080
31	---	---	---				---	---	---	1140	1030	1090
MONTH	1120	856	986				---	---	---	1260	878	1040

11059100 SAN BERNARDINO WATER QUALITY CONTROL PLANT AT SAN BERNARDINO, CALIF.--Continued

SPECIFIC CONDUCTANCE (MICROMHOS/CM AT 25 DEG. C), WATER YEAR OCTOBER 1974 TO SEPTEMBER 1975

	JUNE			JULY			AUGUST			SEPTEMBER		
DAY	MAX	MIN	MEAN	MAX	MIN	MEAN	MAX	MIN	MEAN	MAX	MIN	MEAN
1	1130	985	1040	---	---	---	956	848	918	954	850	908
2	1100	967	1050	1090	920	1020	953	809	893	992	834	919
3	1150	1030	1080	1050	925	995	902	788	863	994	864	944
4	1110	1020	1070	995	865	945	992	786	884	962	846	919
5	1140	954	1050	940	806	883	966	824	906	994	846	927
6	1190	997	1100	916	796	872	---	---	---	992	884	943
7	1160	1030	1080	1010	803	900	---	---	---	942	842	897
8	1030	974	1010	988	840	938	---	---	---	1020	840	913
9	1150	937	1020	1000	826	922	---	---	---	1090	902	979
10	1130	980	1020	987	821	916	---	---	---	1090	922	989
11	1110	951	1050	1000	859	943	---	---	---	1050	920	1010
12	1100	978	1030	994	872	928	---	---	---	1030	886	972
13	1060	972	1020	950	860	908	---	---	---	1010	870	943
14	1030	969	1000	1120	861	950	---	---	---	---	---	---
15	1130	923	1010	1060	918	999	---	---	---	---	---	---
16	1100	976	1030	1040	918	991	---	---	---	---	---	---
17	1100	1020	1070	1050	881	979	---	---	---	---	---	---
18	1070	955	1010	1040	907	990	1020	896	974	---	---	---
19	1100	922	991	1020	926	973	1010	896	955	---	---	---
20	1070	985	1030	981	887	937	1000	892	953	---	---	---
21	1050	945	983	1050	890	957	1010	892	946	---	---	---
22	980	924	948	1030	899	970	970	912	951	---	---	---
23	1110	927	998	996	898	953	974	868	922	1060	940	1010
24	1090	979	1040	1030	905	965	930	858	893	1040	928	983
25	1110	954	1010	972	876	934	1010	838	908	1040	920	983
26	1020	897	959	943	851	906	1010	904	962	1030	940	991
27	1050	900	981	906	834	874	1010	904	955	1000	900	957
28	1010	918	965	1020	852	910	1010	892	948	980	900	944
29	992	894	943	1010	889	955	998	878	947	1060	884	968
30	---	---	---	980	858	927	970	886	932	1070	960	1020
31	---	---	---	979	849	929	940	856	900	---	---	---
MONTH	1190	894	1020	1120	796	942	---	---	---	---	---	---
YEAR	1260	786	992									

11059300 SANTA ANA RIVER AT E STREET, NEAR SAN BERNARDINO, CALIF.

LOCATION.--Lat 34°04'05", long 117°17'36", in San Bernardino Grant, San Bernardino County, on downstream side of E Street bridge, 0.8 mi (1.3 km) downstream from San Timoteo Creek, 1 mi (2 km) upstream from Warm Creek, and 3 mi (5 km) south of San Bernardino.

DRAINAGE AREA.--532 mi^2 (1,378 km^2).

PERIOD OF RECORD.--March 1939 to September 1954, October 1966 to current year.

GAGE.--Water-stage recorder. Datum of gage is 954.50 ft (290.932 m) above mean sea level. Prior to Nov. 10, 1950, water-stage recorder on right bank at datum 10.00 ft (3.048 m) higher. Nov. 11, 1950, to Sept. 30, 1954, water-stage recorders on both banks at datum 10.00 ft (3.048 m) higher.

AVERAGE DISCHARGE.--15 years (1939-54), 12.5 ft^3/s (0.354 m^3/s), 9,050 acre-ft/yr (11.2 hm^3); 9 years (1966-75), 64.3 ft^3/s (1.821 m^3/s), 49,590 acre-ft/yr (61.1 hm^3).

EXTREMES.--Current year: Maximum discharge, 1,130 ft^3/s (32.0 m^3/s) Dec. 4 (gage height, 4.10 ft or 1.249 m); minimum daily, 20 ft^3/s (0.56 m^3/s) Oct. 18, Aug. 31.
Period of record: Maximum discharge, 28,000 ft^3/s (793 m^3/s) Feb. 25, 1969; maximum gage height, 16.50 ft (5.029 m), present datum, Jan. 23, 1943, discharge uncertain but was probably less than 8,000 ft^3/s (227 m^3/s); no flow many days prior to 1967.

REMARKS.--Records poor. Flow partly regulated by Big Bear Lake (see sta 11049000). Natural flow of stream affected by ground-water withdrawals and diversions for domestic use and irrigation above station. Effluent from sewage reclamation plant causes sustained flow since station was last operated. See schematic diagram of Santa Ana River basin.

DISCHARGE, IN CUBIC FEET PER SECOND, WATER YEAR OCTOBER 1974 TO SEPTEMBER 1975
MEAN VALUES

DAY	OCT	NOV	DEC	JAN	FEB	MAR	APR	MAY	JUN	JUL	AUG	SEP
1	23	24	22	22	24	24	32	24	24	24	24	23
2	23	24	24	23	23	23	24	24	26	23	23	24
3	24	23	22	24	97	23	24	22	26	23	22	25
4	24	24	300	22	30	23	23	24	26	23	24	26
5	24	24	37	22	28	26	42	25	26	23	24	26
6	22	23	25	23	26	125	45	25	26	21	24	24
7	25	24	24	23	26	29	28	25	25	24	24	23
8	24	24	22	24	23	270	37	24	24	24	24	28
9	24	22	24	25	68	54	48	23	26	24	24	26
10	24	21	24	23	44	135	32	22	26	25	23	26
11	23	24	23	23	25	47	34	22	27	24	25	25
12	22	23	23	22	23	31	30	26	26	22	24	25
13	22	23	22	23	23	31	27	25	26	22	24	24
14	24	23	22	22	32	62	26	24	25	24	25	24
15	23	24	22	22	24	28	27	24	24	23	25	23
16	24	22	23	23	21	36	26	24	26	23	24	25
17	24	23	22	23	24	26	33	24	25	23	24	24
18	20	24	22	22	24	24	27	23	25	23	26	24
19	23	23	23	22	23	23	25	26	25	22	26	24
20	23	23	22	24	22	23	24	27	26	21	25	23
21	23	23	22	24	23	23	23	26	23	23	24	23
22	22	24	21	23	22	36	23	24	22	23	24	23
23	23	24	23	22	22	24	24	24	25	23	24	23
24	24	23	23	23	24	24	23	23	25	23	24	24
25	24	24	21	23	23	31	30	22	25	24	22	25
26	21	24	24	23	24	26	24	23	26	23	24	25
27	22	23	23	24	24	25	23	24	24	22	24	24
28	76	22	44	24	25	24	23	25	24	24	26	24
29	54	23	42	24	---	24	23	24	23	24	26	26
30	32	22	24	26	---	24	23	25	24	25	22	26
31	23	---	24	24	---	23	---	25	---	24	20	---
TOTAL	809	697	1039	717	817	1347	853	748	751	719	744	735
MEAN	26.1	23.2	33.5	23.1	29.2	43.5	28.4	24.1	25.0	23.2	24.0	24.5
MAX	76	24	300	26	97	270	48	27	27	25	26	28
MIN	20	21	21	22	21	23	23	22	22	21	20	23
AC-FT	1600	1380	2060	1420	1620	2670	1690	1480	1490	1430	1480	1460

CAL YR 1974 TOTAL 12849 MEAN 35.2 MAX 1100 MIN 18 AC-FT 25490
WTR YR 1975 TOTAL 9976 MEAN 27.3 MAX 300 MIN 20 AC-FT 19790

Peak discharge (base, 400 ft^3/s)

Date	Time	G.H.	Discharge	Date	Time	G.H.	Discharge
12-4	0800	4.10	1,130	3-8	1500	3.65	830
3-6	0700	3.15	610	3-10	1700	3.05	512

NOTE.--No gage-height record Dec. 4 to Feb. 3, June 6 to Sept. 30.

11060400 WARM CREEK NEAR SAN BERNARDINO, CALIF.

LOCATION.--Lat 34°04'42", long 117°17'58", in San Bernardino Grant, San Bernardino County, on left bank 0.2 mi (0.3 km) downstream from State Highway 395 bridge, and 2.0 mi (3.2 km) southeast of San Bernardino.

DRAINAGE AREA.--15.0 mi^2 (38.9 km^2).

PERIOD OF RECORD.--February 1964 to September 1972, October 1974 to current year.

GAGE.--Water-stage recorder. Altitude of gage is 960 ft (293 m), from topographic map. Prior to Oct. 1, 1974, at site 0.1 mi (0.2 km) upstream at different datum.

AVERAGE DISCHARGE.--8 years (1965-72), 1.61 ft^3/s (0.0456 m^3/s), 1,170 acre-ft/yr (1.44 hm^3/yr).

EXTREMES.--Current year: Maximum discharge, 878 ft^3/s (24.9 m^3/s) Dec. 4 (gage height, 2.37 ft or 0.722 m); no flow many days.
Period of record: Maximum discharge, 2,200 ft^3/s (62.3 m^3/s) Jan. 25, 1969 (gage height, 5.55 ft or 1.692 m, at site and datum then in use); no flow many days in each year.

REMARKS.--Records good above 5 ft^3/s (0.14 m^3/s) and poor below. See schematic diagram of Santa Ana River basin.

DISCHARGE, IN CUBIC FEET PER SECOND, WATER YEAR OCTOBER 1974 TO SEPTEMBER 1975
MEAN VALUES

DAY	OCT	NOV	DEC	JAN	FEB	MAR	APR	MAY	JUN	JUL	AUG	SEP
1	.34	.34	0	.20	.40	.34	1.8	.09	.53	1.1	.31	.05
2	.53	.34	.03	.20	.40	.04	.19	.09	.53	1.1	.17	.25
3	.53	.09	.03	.20	68	.02	.53	.19	1.1	.80	.09	.23
4	.19	.09	156	.20	5.4	.02	.34	.06	.53	.53	.16	.05
5	.53	.09	1.8	.20	5.0	6.7	15	.45	.34	.53	.16	.06
6	.09	.19	.09	.20	.19	52	1.8	.21	.53	.53	.64	.24
7	.80	.06	0	.20	.19	4.7	.19	.19	.34	.80	.34	.06
8	.53	.06	0	.70	1.1	81	13	.34	.19	1.4	.45	12
9	.53	.09	0	.80	54	2.4	2.9	.19	.34	2.4	.30	.44
10	.09	.09	0	.05	17	51	3.5	.19	.80	1.1	.22	.24
11	.19	.53	0	.05	.53	11	2.8	.19	1.1	1.1	.34	.25
12	.06	.34	0	.03	.09	.53	.53	.53	.60	1.4	.30	.19
13	.13	.34	0	.04	.53	5.9	.09	.19	.30	.80	.64	.08
14	.53	.19	0	.19	12	14	.09	.19	.20	.53	.34	.12
15	1.1	.53	0	.19	.09	.04	.19	.53	.20	1.1	.40	.12
16	.53	.07	0	.09	0	7.8	.19	.53	.20	.80	.17	.53
17	.53	.09	0	.09	0	.06	7.6	.19	.53	.50	.02	.10
18	1.1	.09	0	.06	0	.09	.30	.34	1.8	.40	.18	.19
19	.53	.09	0	.05	.06	.04	.30	.34	1.8	.27	.20	.32
20	.19	.09	0	.29	.09	.07	.30	3.4	.53	.20	.27	.10
21	.19	.09	0	.19	.09	.05	.30	.80	.53	.70	.30	.17
22	.53	1.1	0	.19	0	20	.30	.53	.53	.41	.18	.29
23	.80	.09	0	.03	0	.09	.30	.53	.53	.57	.11	.18
24	.53	.09	0	.03	0	.09	.30	.19	.53	.65	.01	.23
25	.53	.09	0	.03	.08	10	5.8	.34	1.8	1.1	.41	.86
26	1.1	.09	0	.04	.19	.06	.02	.53	.80	.48	.12	.43
27	.19	.03	0	.04	.19	.08	0	.53	.53	.37	.17	.21
28	39	.06	14	.04	.19	.02	.18	1.1	.80	.37	0	.13
29	5.7	0	12	.04	---	.05	.53	.80	1.8	.52	.73	.20
30	.53	0	1.0	1.2	---	0	.80	.80	1.8	.73	.55	.45
31	.16	---	.50	1.3	---	1.5	---	.34	---	.56	.01	---
TOTAL	58.31	5.44	185.45	7.16	165.81	269.69	60.17	14.92	22.14	23.85	8.29	18.77
MEAN	1.88	.18	5.98	.23	5.92	8.70	2.01	.48	.74	.77	.27	.63
MAX	39	1.1	156	1.3	68	81	15	3.4	1.8	2.4	.73	12
MIN	.06	0	0	.03	0	0	0	.06	.19	.20	0	.05
AC-FT	116	11	368	14	329	535	119	30	44	47	16	37

WTR YR 1975 TOTAL 840.00 MEAN 2.30 MAX 156 MIN 0 AC-FT 1670

11060500 MEEKS AND DALEY CANAL NEAR COLTON, CALIF.

LOCATION.--Lat 34°04'47", long 117°18'00", in San Bernardino Grant, San Bernardino County, 1.5 mi (2.4 km) northeast of Colton.

PERIOD OF RECORD.--September 1920 to current year. Published with station Warm Creek near Colton, October 1950 to September 1961.

GAGE.--Water-stage recorder. Altitude of gage is 965 ft (294 m), from topographic map.

EXTREMES.--Period of record: Maximum daily discharge, 25 ft^3/s (0.71 m^3/s) Mar. 2, 1938; no flow at times in most years.

REMARKS.--Records good; period of estimated record fair. All flow passing station is pumped from ground-water basin for irrigation in vicinity of Colton, Riverside, and Corona. See schematic diagram of Santa Ana River basin.

DISCHARGE, IN CUBIC FEET PER SECOND, WATER YEAR OCTOBER 1974 TO SEPTEMBER 1975

DAY	OCT	NOV	DEC	JAN	FEB	MAR	APR	MAY	JUN	JUL	AUG	SEP
1	8.3	14	5.2		0	0		0	.83	5.5	6.3	5.7
2	8.3	13	5.2		0	0		0	3.8	5.2	6.2	5.7
3	8.3	13	5.2		0	0		0	6.5	5.2	6.0	5.5
4	8.4	13	1.7		0	0		0	6.5	5.2	5.8	5.5
5	8.3	13	0		0	0		0	6.5	5.2	3.5	5.6
6	7.8	13	0		0	0		0	6.5	5.2	2.3	5.5
7	7.6	13	0		0	0		0	6.5	5.2	5.5	5.5
8	8.0	13	0		0	0		.69	6.5	5.2	5.8	5.5
9	8.7	13	0		0	0		1.1	6.5	5.2	5.8	5.5
10	8.7	13	0		0	1.5		1.1	6.2	5.2	5.9	5.5
11	14	13	0		0	.66		1.1	6.2	5.2	5.9	5.6
12	15	13	0		0	0		1.1	6.2	5.2	5.9	5.6
13	15	13	0		2.1	0		1.1	6.2	5.2	5.8	5.8
14	15	13	0		0	0		1.1	6.2	1.6	5.9	5.7
15	15	7.2	0		0	0		1.1	6.2	0	6.0	5.5
16	15	5.5	0		0	0		.96	5.8	0	5.9	5.3
17	15	5.5	0		0	0		.96	5.5	4.6	5.8	5.5
18	14	5.5	0		0	0		.96	5.5	6.5	5.7	5.4
19	14	5.5	0		0	0		1.0	5.5	7.6	5.9	5.3
20	14	5.5	0		0	0		1.1	5.5	6.2	6.0	5.3
21	14	5.4	0		0	0		1.1	5.2	6.5	5.9	5.3
22	14	5.2	0		0	0		1.1	5.2	6.5	5.9	5.3
23	14	5.2	0		0	0		.96	5.5	6.5	5.9	5.3
24	14	5.2	0		0	0		.96	5.5	6.4	5.9	5.4
25	14	5.3	0		0	0		.96	5.5	6.5	5.8	5.3
26	14	5.4	0		0	0		.96	5.5	6.5	5.9	5.3
27	13	5.2	0		0	0		.96	5.2	6.5	5.8	5.3
28	14	5.2	0		2.9	0		.83	5.5	6.5	5.8	5.3
29	14	5.3	0		------	0		.83	5.5	6.3	5.8	5.4
30	14	5.2	0		------	0		.83	5.5	6.3	5.7	5.3
31	14	------	0		------	0	------	1.1	------	6.2	5.7	------
TOTAL	381.4	270.3	17.3	0	5.0	2.16	0	23.96	169.23	165.1	176.0	163.7
MEAN	12.3	9.01	.56	0	.18	.070	0	.77	5.64	5.33	5.68	5.46
MAX	15	14	5.2	0	2.9	1.5	0	1.1	6.5	7.6	6.3	5.8
MIN	7.6	5.2	0	0	0	0	0	0	.83	0	2.3	5.3
AC-FT	757	536	34	0	9.9	4.3	0	48	336	327	349	325

CAL YR 1974 TOTAL 2,086.00 MEAN 5.72 MAX 15 MIN 0 AC-FT 4,140
WTR YR 1975 TOTAL 1,374.15 MEAN 3.76 MAX 15 MIN 0 AC-FT 2,730

NOTE.--No gage-height record Feb. 14 to Apr. 8.

11062000 LYTLE CREEK NEAR FONTANA, CALIF.

LOCATION.--Lat 34°12'44", long 117°27'26", in SE¼NW¼SE¼ sec.36, T.2 N., R.6 W., San Bernardino County, on right bank 75 ft (23 m) upstream from highway bridge, 0.7 mi (1.1 km) upstream from right tributary, and 8 mi (13 km) north of Fontana.

DRAINAGE AREA.--46.3 mi^2 (119.9 km^2).

PERIOD OF RECORD.--October 1918 to current year. Combined records of Lytle Creek and diversions, October 1898 to December 1899, October 1904 to current year (published as "at mouth of canyon near Rialto" 1898-99, as "near San Bernardino" 1904-18, and as Lytle Creek and Fontana pipeline near Fontana 1919-31). Monthly discharge only for some periods published in WSP 1315-B.

GAGE.--Water-stage recorder on creek. Dual arch-culvert control since 1964; water-stage recorders and sharp-crested weirs on conduit and infiltration line. Altitude of gage is 2,380 ft (725 m), from topographic map. October 1918 to Mar. 21, 1938, at site 1 mi (1.6 km) downstream at different datum. Mar. 22, 1938, to Nov. 20, 1963, at site 75 ft (23 m) downstream at datum 4.58 ft (1.396 m).

AVERAGE DISCHARGE (Creek only).--57 years, 13.7 ft^3/s (0.388 m^3/s), 9,930 acre-ft/yr (12.2 hm^3/yr).
(Combined creek and diversions).--72 years, 42.2 ft^3/s (1.195 m^3/s), 30,570 acre-ft/yr (37.7 hm^3/yr).

EXTREMES (Creek only).--Current year: Maximum discharge, 199 ft^3/s (5.64 m^3/s) Mar. 6 (gage height, 4.78 ft or 1.457 m); no flow for several months.
Period of record: Maximum discharge, 35,900 ft^3/s (1,020 m^3/s) Jan. 25, 1969 (gage height, 15.0 ft or 4.57 m, from floodmark), from rating curve extended above 570 ft^3/s (16.1 m^3/s) on basis of slope-area measurements at gage heights 10.78 ft (3.286 m) and 15.0 ft (4.57 m); no flow at times in each year.
(Combined flow).--Current year: Maximum discharge, 207 ft^3/s (5.86 m^3/s) Mar. 6; minimum daily, 15 ft^3/s (0.42 m^3/s) several days in August and September.
Period of record: Maximum discharge, 35,900 ft^3/s (1,020 m^3/s) Jan. 25, 1969; minimum daily, 4.4 ft^3/s (0.12 m^3/s) Oct. 4-11, 1970 (affected by change in diversions due to fire of September 1970).

REMARKS.--Records (creek only), fair; (combined creek and diversions), fair. No regulation above station. Southern California Edison Co.'s Lytle Creek conduit diverts 2.3 mi (3.7 km) upstream for power development, and Fontana Union Water Co. collects water from an infiltration line upstream for irrigation. See schematic diagram of Santa Ana River basin. For records of combined discharge of Lytle Creek and diversions, see following page.

DISCHARGE, IN CUBIC FEET PER SECOND, WATER YEAR OCTOBER 1974 TO SEPTEMBER 1975
MEAN VALUES

DAY	OCT	NOV	DEC	JAN	FEB	MAR	APR	MAY	JUN	JUL	AUG	SEP
1	0	0	0		0	0	2.8	.52				
2	0	.10	0		0	0	2.6	.37				
3	0	.12	0		.02	0	2.4	.37				
4	0	0	48		1.0	0	2.3	.37				
5	0	0	12		1.2	.26	5.0	.24				
6	0	0	0		.32	46	5.2	.18				
7	0	0	0		.07	17	3.5	.18				
8	0	0	0		0	67	10	.21				
9	0	0	0		1.1	13	4.3	.21				
10	0	0	0		1.5	32	3.9	.21				
11	0	0	0		1.0	9.8	3.7	.24				
12	0	0	0		.80	7.4	3.5	.24				
13	0	0	0		.50	8.6	3.7	.24				
14	0	0	0		.20	12	3.5	.28				
15	0	0	0		0	6.7	3.3	.28				
16	0	0	0		0	6.1	3.0	.24				
17	0	0	0		0	5.3	2.6	0				
18	0	0	0		0	4.8	2.2	0				
19	0	0	0		0	4.8	2.0	0				
20	0	0	0		0	3.7	1.8	.56				
21	0	0	0		0	3.5	1.8	.22				
22	0	0	0		0	4.1	1.8	.02				
23	0	0	0		0	3.7	1.8	0				
24	0	0	0		0	3.3	1.4	0				
25	0	0	0		0	3.9	1.3	0				
26	0	0	0		0	3.0	1.2	0				
27	0	0	0		0	2.8	.90	0				
28	.24	0	0		0	2.8	.75	0				
29	.57	0	0		---	3.2	.75	0				
30	.12	0	0		---	2.6	.68	0				
31	0	---	0		---	2.6	---	0	---			---
TOTAL	.93	.22	60	0	7.71	279.96	83.68	5.18	0	0	0	0
MEAN	.030	.007	1.94	0	.28	9.03	2.79	.17	0	0	0	0
MAX	.57	.12	48	0	1.5	67	10	.56	0	0	0	0
MIN	0	0	0	0	0	0	.68	0	0	0	0	0
AC-FT	1.8	.4	119	0	15	555	166	10	0	0	0	0

CAL YR 1974 TOTAL 2343.75 MEAN 6.42 MAX 143 MIN 0 AC-FT 4650
WTR YR 1975 TOTAL 437.68 MEAN 1.20 MAX 67 MIN 0 AC-FT 868

Peak discharge (base, 200 ft^3/s).--No peak above base.

11062000 LYTLE CREEK NEAR FONTANA, CALIF.--Continued

COMBINED DISCHARGE, IN CUBIC FEET PER SECOND, OF LYTLE CREEK, SOUTHERN CALIFORNIA EDISON CO.'S LYTLE CONDUIT, AND FONTANA UNION WATER CO.'S INFILTRATION LINE, NEAR FONTANA, CALIF., WATER YEAR OCTOBER 1974 TO SEPTEMBER 1975

DAY	OCT	NOV	DEC	JAN	FEB	MAR	APR	MAY	JUN	JUL	AUG	SEP
1	20	25	25	22	23	21	31	30	22	19	16	15
2	20	24	25	19	23	22	30	29	23	19	16	16
3	22	25	24	19	26	22	30	29	22	19	16	15
4	22	25	57	19	26	22	31	29	22	19	16	15
5	22	25	27	19	27	23	34	28	22	19	16	15
6	21	25	27	20	25	55	34	28	21	19	15	16
7	22	25	25	22	25	32	32	28	22	19	16	16
8	23	25	23	25	24	81	38	27	23	18	15	17
9	22	26	25	25	28	28	32	27	21	18	16	16
10	22	26	25	25	27	59	32	27	21	18	16	16
11	22	24	25	24	29	37	32	27	20	18	16	16
12	22	23	27	23	28	34	32	27	20	18	16	15
13	21	23	27	23	28	36	32	27	20	18	16	16
14	21	24	27	24	27	42	32	27	20	18	16	16
15	21	24	27	24	27	37	32	28	20	18	16	16
16	21	24	25	24	27	35	32	27	21	17	16	16
17	21	24	26	24	26	34	31	27	22	17	16	15
18	20	24	26	24	25	33	31	26	22	18	16	15
19	20	23	25	24	25	33	31	26	22	18	16	16
20	20	22	25	23	25	32	30	28	21	18	17	15
21	20	25	25	23	24	31	30	27	21	18	17	15
22	21	25	25	22	23	31	30	26	21	17	16	16
23	22	25	25	22	23	32	30	26	20	16	16	16
24	22	25	22	22	23	32	30	27	20	17	16	15
25	23	25	18	23	23	33	31	26	20	17	16	15
26	22	25	19	23	22	32	29	26	20	17	16	15
27	23	24	18	23	22	32	30	26	20	16	16	15
28	23	24	21	24	21	33	30	25	19	16	16	15
29	26	24	22	25	---	33	30	24	20	17	16	15
30	26	24	22	22	---	32	30	23	19	17	16	15
31	26	---	23	21	---	32	---	23	---	17	16	---
TOTAL	679	732	783	702	702	1071	939	831	627	550	496	465
MEAN	21.9	24.4	25.3	22.6	25.1	34.5	31.3	26.8	20.9	17.7	16.0	15.5
MAX	26	26	57	25	29	81	38	30	23	19	17	17
MIN	20	22	18	19	21	21	29	23	19	16	15	15
AC-FT	1350	1450	1550	1390	1390	2120	1860	1650	1240	1090	984	922

CAL YR 1974 TOTAL 11542 MEAN 31.6 MAX 166 MIN 18 AC-FT 22890
WTR YR 1975 TOTAL 8577 MEAN 23.5 MAX 81 MIN 15 AC-FT 17010

Peak discharge (base, 200 ft^3/s).--Mar. 6 (0700) 207 ft^3/s.

11063500 LONE PINE CREEK NEAR KEENBROOK, CALIF.

LOCATION.--Lat 34°15'59", long 117°27'47", in SE¼SE¼SW¼ sec.12, T.2 N., R.6 W., San Bernardino County, on right bank 50 ft (15 m) upstream from the Atchison, Topeka, and Santa Fe Railway Co. bridge, 150 ft (46 m) upstream from mouth, and 1.1 mi (1.8 km) north of Keenbrook.

DRAINAGE AREA.--15.1 mi^2 (39.1 km^2).

PERIOD OF RECORD.--December 1919 to September 1938, June 1949 to current year.

GAGE.--Water-stage recorder and concrete control. Datum of gage is 2,605.92 ft (794.284 m) above mean sea level. Prior to Mar. 2, 1938, water-stage recorder (destroyed by flood) and Mar. 2 to Sept. 30, 1938, nonrecording gage at same site at datum 0.98 ft (0.299 m) higher.

AVERAGE DISCHARGE.--44 years (1920-38, 1949-75), 1.43 ft^3/s (0.0405 m^3/s), 1,040 acre-ft/yr (1.28 hm^3/yr).

EXTREMES.--Current year: Maximum discharge, 42 ft^3/s (1.19 m^3/s) Mar. 8 (gage height, 2.17 ft or 0.661 m); minimum daily, 0.29 ft^3/s (0.008 m^3/s) Aug. 8.
Period of record: Maximum discharge, 6,180 ft^3/s (175 m^3/s) Mar. 2, 1938, on basis of slope-area measurement of maximum flow; no flow Aug. 6-8, Sept. 29, 30, 1965.

REMARKS.--Records good except those for period of no gage-height record, which are poor. No regulation or diversion above station. See schematic diagram of Santa Ana River basin.

DISCHARGE, IN CUBIC FEET PER SECOND, WATER YEAR OCTOBER 1974 TO SEPTEMBER 1975
MEAN VALUES

DAY	OCT	NOV	DEC	JAN	FEB	MAR	APR	MAY	JUN	JUL	AUG	SEP
1	.70	.79	.59	.78	.78	.78	1.1	.78	.59	.50	.45	.54
2	.67	.78	.59	.68	.78	.78	1.1	.76	.59	.50	.43	.44
3	.68	.71	.61	.68	1.2	.78	1.1	.76	.59	.50	.42	.44
4	.68	.59	4.8	.68	.90	.78	1.1	.74	.59	.50	.42	.47
5	.68	.59	.86	.68	.82	2.3	1.1	.74	.59	.50	.38	.46
6	.68	.59	.78	.60	.78	6.8	1.1	.74	.59	.46	.33	.46
7	.69	.59	.78	.68	.78	1.3	1.1	.72	.55	.45	.34	.42
8	.68	.59	.78	.66	.78	4.4	1.2	.72	.59	.42	.29	.36
9	.68	.59	.78	.68	.90	.88	1.3	.70	.59	.45	.44	.50
10	.68	.59	.77	.67	.78	.97	.99	.69	.59	.43	.45	.50
11	.68	.59	.69	.59	.78	.88	.97	.68	.59	.42	.48	.50
12	.65	.59	.71	.59	.78	.78	.99	.68	.59	.39	.36	.51
13	.65	.59	.78	.59	.78	.80	.99	.66	.59	.40	.41	.47
14	.65	.62	.78	.59	.78	.82	.93	.66	.59	.39	.41	.44
15	.65	.68	.78	.58	.78	.78	.89	.65	.56	.38	.41	.42
16	.65	.59	.78	.59	.78	.78	.88	.64	.59	.40	.41	.40
17	.66	.59	.78	.59	.71	.78	.88	.64	.59	.39	.59	.42
18	.67	.59	.78	.59	.68	.78	.88	.62	.59	.39	.59	.42
19	.73	.59	.78	.59	.75	.78	.88	.63	.59	.37	.59	.42
20	.77	.59	.78	.59	.78	.78	.86	.67	.59	.39	.63	.42
21	.78	.59	.78	.59	.78	.78	.86	.60	.59	.38	.62	.45
22	.78	.59	.78	.59	.69	.92	.86	.58	.59	.44	.59	.43
23	.78	.58	.78	.62	.68	.88	.84	.58	.53	.45	.62	.42
24	.78	.57	.78	.59	.68	.88	.84	.57	.59	.47	.64	.42
25	.78	.57	.78	.59	.76	.89	.82	.56	.50	.42	.69	.43
26	.78	.59	.82	.59	.78	.88	.82	.56	.50	.44	.76	.43
27	.78	.59	.88	.71	.78	.88	.82	.56	.50	.46	.75	.45
28	.78	.59	.98	.78	.78	.88	.80	.56	.50	.47	.76	.41
29	.78	.59	.94	.78	---	.88	.80	.56	.50	.49	.78	.42
30	.78	.59	.79	.78	---	.96	.79	.57	.50	.45	.78	.35
31	.78	---	.78	.78	---	1.1	---	.59	---	.44	.71	---
TOTAL	22.16	18.28	28.07	20.08	22.03	37.66	28.59	20.17	17.03	13.54	16.53	13.22
MEAN	.71	.61	.91	.65	.79	1.21	.95	.65	.57	.44	.53	.44
MAX	.78	.79	4.8	.78	1.2	6.8	1.3	.78	.59	.50	.78	.54
MIN	.65	.57	.59	.58	.68	.78	.79	.56	.50	.37	.29	.35
AC-FT	44	36	56	40	44	75	57	40	34	27	33	26

CAL YR 1974 TOTAL 439.36 MEAN 1.20 MAX 51 MIN .57 AC-FT 871
WTR YR 1975 TOTAL 257.36 MEAN .71 MAX 6.8 MIN .29 AC-FT 510

Peak discharge (base 80 ft^3/s).--No peak above base.

NOTE.--No gage-height record Apr. 17 to May 28.

11063510 CAJON CREEK BELOW LONE PINE CREEK, NEAR KEENBROOK, CALIF.

LOCATION.--Lat 34°15'58", long 117°27'47", in NE¼NW¼ sec.13, T.2 N., R.6 W., San Bernardino County, on right bank 25 ft (8 m) downstream from confluence with Lone Pine Creek, 1.1 mi (1.8 km) north of Keenbrook.

DRAINAGE AREA.--55.8 mi^2 (144.5 km^2).

PERIOD OF RECORD.--October 1971 to current year.

GAGE.--Water-stage recorder. Altitude of gage is 2,600 ft (792 m), from topographic map.

EXTREMES.--Current year: Maximum discharge, 275 ft^3/s (7.79 m^3/s) Mar. 8 (gage height, 9.20 ft or 2.804 m); minimum daily, 2.8 ft^3/s (0.079 m^3/s) Sept. 19-21, 23-30.
Period of record: Maximum discharge, 1,780 ft^3/s (50.4 m^3/s) Feb. 11, 1973 (gage height, 13.50 ft or 4.115 m); minimum daily, 2.6 ft^3/s (0.074 m^3/s) on some days in 1971, 1974.

REMARKS.--Records poor. No regulation or diversion above station. See schematic diagram of Santa Ana River basin.

DISCHARGE, IN CUBIC FEET PER SECOND, WATER YEAR OCTOBER 1974 TO SEPTEMBER 1975
MEAN VALUES

DAY	OCT	NOV	DEC	JAN	FEB	MAR	APR	MAY	JUN	JUL	AUG	SEP
1	3.9	4.1	3.7	4.3	3.3	3.5	5.6	6.3	4.8	4.1	3.0	3.4
2	3.9	4.1	3.7	4.3	3.3	3.5	5.6	6.3	4.8	4.0	3.0	3.4
3	3.9	4.1	3.7	4.1	20	3.5	5.6	6.3	4.8	3.9	3.0	3.5
4	3.9	4.1	34	3.9	11	3.5	5.6	6.0	4.7	3.8	3.0	3.5
5	3.9	3.9	5.0	4.3	7.6	9.0	6.3	5.8	4.7	3.8	3.0	3.5
6	4.1	3.9	4.8	4.8	6.3	71	6.3	5.8	4.7	3.7	3.0	3.5
7	4.3	3.9	4.3	4.8	7.2	30	5.8	5.3	4.7	3.7	3.2	3.3
8	4.1	3.3	3.9	4.3	7.2	53	6.3	5.6	4.7	3.7	3.2	3.3
9	4.1	3.3	3.9	3.7	11	20	16	5.3	4.6	3.5	3.2	3.5
10	3.9	3.2	4.1	3.7	7.2	25	12	5.3	4.6	3.5	3.2	3.2
11	3.9	3.2	4.3	3.7	5.3	17	11	5.3	4.4	3.5	3.0	3.0
12	4.1	3.4	4.1	3.7	4.5	14	11	5.3	4.3	3.5	3.3	3.0
13	3.7	3.4	3.9	3.5	3.8	12	10	5.3	4.1	3.7	3.0	3.0
14	3.7	3.4	4.1	3.3	3.6	10	10	5.3	4.3	3.3	3.0	3.0
15	3.9	3.4	4.1	3.3	3.6	8.4	9.6	5.6	4.3	3.3	3.0	3.0
16	3.9	3.5	3.9	3.3	3.5	7.8	9.4	5.6	4.6	3.3	3.0	3.0
17	3.9	3.5	3.9	3.3	3.5	6.3	9.0	5.3	4.8	3.3	3.2	3.0
18	3.9	3.5	3.9	3.3	3.5	7.2	8.4	5.3	4.8	3.3	3.0	3.0
19	3.9	3.6	3.9	3.3	3.5	6.9	8.0	5.3	5.0	3.3	3.0	2.8
20	3.9	3.6	4.1	3.3	3.5	6.3	7.8	6.5	4.8	3.3	3.0	2.8
21	3.9	3.7	4.1	3.3	3.5	6.0	7.5	6.0	4.6	3.3	3.0	2.8
22	3.9	3.7	4.1	3.3	3.5	7.8	7.5	5.4	4.6	3.5	3.1	3.0
23	3.9	3.7	4.3	3.3	3.5	6.3	7.5	5.2	4.3	3.3	3.1	2.8
24	3.9	3.7	4.3	3.3	3.5	5.8	6.9	5.1	4.3	3.3	3.1	2.8
25	3.9	3.7	4.3	3.3	3.5	5.8	6.9	5.0	4.6	3.3	3.2	2.8
26	3.9	3.7	4.6	3.3	3.5	5.8	6.9	5.0	4.6	3.3	3.2	2.8
27	3.8	3.7	4.6	3.3	3.5	5.6	6.9	5.0	4.6	3.3	3.2	2.8
28	4.1	3.7	5.3	4.0	3.5	6.0	6.9	5.0	4.6	3.3	3.3	2.8
29	4.3	3.7	5.3	3.5	---	5.8	6.9	4.8	4.3	3.3	3.3	2.8
30	4.3	3.7	4.6	3.3	---	5.6	6.6	4.8	3.9	3.2	3.3	2.8
31	4.3	---	4.1	3.3	---	5.6	---	4.8	---	3.3	3.4	---
TOTAL	123.0	109.4	160.9	113.4	150.4	384.0	239.8	168.9	136.9	107.9	96.5	91.9
MEAN	3.97	3.65	5.19	3.66	5.37	12.4	7.99	5.45	4.56	3.48	3.11	3.06
MAX	4.3	4.1	34	4.8	20	71	16	6.5	5.0	4.1	3.4	3.5
MIN	3.7	3.2	3.7	3.3	3.3	3.5	5.6	4.8	3.9	3.2	3.0	2.8
AC-FT	244	217	319	225	298	762	476	335	272	214	191	182

CAL YR 1974 TOTAL 3226.1 MEAN 8.84 MAX 340 MIN 2.6 AC-FT 6400
WTR YR 1975 TOTAL 1883.0 MEAN 5.16 MAX 71 MIN 2.8 AC-FT 3730

Peak discharge (base, 150 ft^3/s).--Mar. 5 (2400) 241 ft^3/s (9.03 ft); Mar. 8 (0700) 275 ft^3/s (9.20 ft).

11063680 DEVIL CANYON CREEK NEAR SAN BERNARDINO, CALIF.

LOCATION.--Lat 34°12'30", long 117°19'50", in Muscupiabe Grant, San Bernardino County, on left bank 0.6 mi (1.0 km) downstream from confluence of East and West Forks, and 7.5 mi (12.1 km) northwest of San Bernardino.

DRAINAGE AREA.--5.49 mi^2 (14.22 km^2).

PERIOD OF RECORD.--November 1911 to September 1912, October 1913 to September 1914, December 1919 to current year. Monthly figures only for January 1914, published in WSP 1315-B.

GAGE.--Water-stage recorder on creek; flowmeter on diversion. Altitude of gage is 2,080 ft (634 m), from topographic map. Prior to December 1919, nonrecording gage at site 0.5 mi (0.8 km) downstream at different datum. December 1919 to July 1969, at site 0.4 mi (0.6 km) downstream at different datum. July 1969 to September 1972, present gage used as supplementary gage. Oct. 1, 1973, to Feb. 25, 1974, supplementary gage at site 0.5 mi (0.8 km) downstream at different datum.

AVERAGE DISCHARGE (Creek only).--56 years (1913-14, 1920-75), 1.91 ft^3/s (0.0541 m^3/s), 1,380 acre-ft/yr (1.70 hm^3/yr).
(Combined creek and diversion).--42 years (1913-14, 1934-75), 3.57 ft^3/s (0.101 m^3/s), 2,590 acre-ft/yr (3.19 hm^3/yr).

EXTREMES.--Current year: Maximum discharge, 34 ft^3/s (0.96 m^3/s) Dec. 4 (gage height, 3.38 ft or 1.030 m); minimum daily, 0.38 ft^3/s (0.011 m^3/s) Oct. 9.
Period of record (1913-14, 1919 to current year): Maximum discharge, 3,720 ft^3/s (105 m^3/s) Jan. 25, 1969 (gage height, 5.40 ft or 1.646 m, site and datum then in use), on basis of slope-area measurement of maximum flow; no flow at times in most years.

REMARKS.--Records good except those for period of no gage-height record, which are fair. No regulation above station. City of San Bernardino diverts above station for municipal supply. See schematic diagram of Santa Ana River basin.

COOPERATION.--Records of diversion furnished by city of San Bernardino.

DISCHARGE, IN CUBIC FEET PER SECOND, WATER YEAR OCTOBER 1974 TO SEPTEMBER 1975
MEAN VALUES

DAY	OCT	NOV	DEC	JAN	FEB	MAR	APR	MAY	JUN	JUL	AUG	SEP
1	.66	1.7	1.1	1.9	3.2	1.7	4.9	3.4	2.6	2.0	1.2	1.0
2	.81	1.6	1.6	1.9	3.5	1.6	4.1	3.4	2.7	1.8	1.2	1.0
3	.64	1.5	1.9	1.8	5.6	1.6	3.9	3.1	2.7	1.8	1.2	1.0
4	.40	1.5	10	1.8	5.5	1.7	4.3	3.3	2.7	1.8	1.1	1.0
5	.40	1.1	4.0	1.8	4.7	2.2	4.7	3.3	2.7	1.8	1.1	1.0
6	.40	.52	2.5	1.2	3.8	5.8	5.4	3.1	2.6	1.7	1.1	1.0
7	.40	.99	2.4	1.3	3.6	4.3	4.5	2.9	2.5	1.7	1.1	1.0
8	.40	1.2	2.3	1.8	3.2	10	4.7	2.7	2.5	1.7	1.1	1.0
9	.38	1.3	2.3	1.9	8.0	7.8	5.6	2.7	2.5	1.7	1.1	1.0
10	.68	1.3	2.0	1.6	5.6	9.7	5.2	2.7	2.3	1.7	1.1	1.0
11	1.1	1.5	1.9	1.6	4.7	7.2	5.4	2.6	2.2	1.7	1.1	.98
12	1.1	1.5	1.8	1.6	3.8	6.4	4.9	2.6	2.3	1.6	1.1	.98
13	1.2	1.4	1.8	1.5	3.6	5.9	4.7	2.5	2.3	1.6	1.1	.98
14	1.2	1.4	1.7	1.5	3.3	8.4	4.7	2.5	2.2	1.6	1.1	.98
15	1.2	1.1	1.6	1.5	3.2	5.9	4.7	2.8	2.2	1.5	1.1	.98
16	1.2	1.1	1.7	1.5	2.9	6.4	4.7	2.9	2.2	1.5	1.1	.98
17	1.0	1.2	1.9	1.5	2.8	5.9	4.3	2.9	2.3	1.5	1.1	.98
18	1.2	.91	1.8	1.5	2.7	5.6	4.1	2.9	2.4	1.6	1.1	.98
19	1.2	.63	1.8	1.6	2.2	5.4	4.1	2.9	2.5	1.6	1.1	.96
20	1.3	.98	1.5	1.4	2.3	5.2	3.9	3.7	2.4	1.5	1.1	.96
21	.81	1.2	1.3	1.7	2.3	5.2	3.9	3.3	2.3	1.5	1.0	.96
22	.40	.86	1.4	1.7	2.2	6.1	3.7	3.1	2.2	1.4	1.0	.96
23	.43	1.3	1.8	1.7	2.0	5.2	3.7	3.1	2.1	1.3	1.0	.96
24	.45	1.5	2.0	1.7	1.8	4.9	3.5	2.8	2.1	1.3	1.0	.96
25	.45	1.3	2.2	1.8	1.8	6.4	4.3	2.7	2.1	1.3	1.0	.96
26	.45	1.4	2.1	1.8	1.6	4.9	4.1	2.7	2.1	1.3	1.0	.96
27	.45	1.2	1.9	1.8	1.7	5.2	3.7	2.7	2.0	1.3	1.0	.94
28	2.7	1.3	2.2	2.4	1.8	4.7	3.5	2.7	2.0	1.3	1.0	.94
29	2.1	1.6	2.3	1.9	---	4.9	3.2	2.6	2.0	1.4	1.0	.94
30	1.7	1.0	2.0	2.5	---	4.9	3.0	2.6	1.9	1.3	1.0	.94
31	1.6	---	2.0	3.5	---	4.7	---	2.5	---	1.3	1.0	---
TOTAL	28.41	37.09	68.8	54.7	93.4	165.8	129.4	89.7	69.6	48.1	33.3	29.28
MEAN	.92	1.24	2.22	1.76	3.34	5.35	4.31	2.89	2.32	1.55	1.07	.98
MAX	2.7	1.7	10	3.5	8.0	10	5.6	3.7	2.7	2.0	1.2	1.0
MIN	.38	.52	1.1	1.2	1.6	1.6	3.0	2.5	1.9	1.3	1.0	.94
AC-FT	56	74	136	108	185	329	257	178	138	95	66	58
(a)	124	184	246	260	217	397	345	341	283	204	156	126

CAL YR 1974 TOTAL 972.13 MEAN 2.66 MAX 39 MIN .38 AC-FT 1930 AC-FT a 2,850
WTR YR 1975 TOTAL 847.58 MEAN 2.32 MAX 10 MIN .38 AC-FT 1680 AC-FT a 2,880

a Combined discharge, in acre-feet, of Devil Canyon Creek and city of San Bernardino diversion.

Peak discharge (base, 25 ft^3/s).--Dec. 4 (2000) 34 ft^3/s (3.38 ft); Feb. 9 (1630) 29 ft^3/s (3.30 ft).

NOTE.--No gage-height record Aug. 5 to Sept. 30.

11065000 LYTLE CREEK AT COLTON, CALIF.

LOCATION.--Lat 34°04'44", long 117°18'17", in San Bernardino Grant, San Bernardino County, on right bank 400 ft (122 m) downstream from Colton Avenue, 1,930 ft (588 m) upstream from outlet end of channel, and 1.3 mi (2.1 km) northeast of Colton.

DRAINAGE AREA.--172 mi^2 (445 km^2).

PERIOD OF RECORD.--October 1957 to current year.

GAGE.--Water-stage recorder. Datum of gage is 974.67 ft (297.079 m) above mean sea level (Corps of Engineers bench mark).

AVERAGE DISCHARGE.--17 years (1957-74), 6.65 ft^3/s (0.188 m^3/s), 4,820 acre-ft/yr (5.94 hm^3/yr).

EXTREMES.--Current year: Maximum discharge, 462 ft^3/s (13.1 m^3/s) Dec. 4 (gage height, 2.34 ft or 0.713 m); no flow most of year.
Period of record: Maximum discharge, 16,800 ft^3/s (476 m^3/s) Jan. 25, 1969 (gage height, 13.6 ft or 4.15 m, from floodmarks), from rating curve extended above 4,200 ft^3/s (119 m^3/s) on basis of discharge for design flood at gage height 21.4 ft (6.52 m); no flow most of each year.

REMARKS.--Records poor. Flow partly regulated by Lytle Creek spreading grounds 3.2 mi (5.1 km) upstream. Diversions above station for irrigation, power development, domestic use, and ground-water replenishment. This water is not included in the average discharge computations. See schematic diagram of Santa Ana River basin.

DISCHARGE, IN CUBIC FEET PER SECOND, WATER YEAR OCTOBER 1974 TO SEPTEMBER 1975
MEAN VALUES

DAY	OCT	NOV	DEC	JAN	FEB	MAR	APR	MAY	JUN	JUL	AUG	SEP
1	0		0		0	0	0					0
2	0		0		0	0	0					0
3	0		0		9.5	0	0					0
4	0		52		.17	0	0					0
5	0		.30		.26	.02	.36					0
6	0		.30		0	9.7	0					0
7	0		.30		0	.13	0					0
8	0		.30		0	21	.47					1.6
9	0		.30		4.2	0	.13					0
10	0		.30		1.6	7.0	.11					0
11	0		.30		0	.05	0					0
12	0		.30		0	0	0					0
13	0		.30		0	0	0					0
14	0		.30		.08	5.1	0					0
15	0		.30		0	0	0					0
16	0		.20		0	.08	.25					0
17	0		.20		0	0	0					0
18	0		.20		0	0	0					0
19	0		.10		0	0	0					0
20	0		.10		0	0	0					0
21	0		.10		0	0	0					0
22	0		.10		0	2.0	0					0
23	0		0		0	0	0					0
24	0		0		0	0	0					0
25	0		0		0	.58	0					0
26	0		0		0	0	0					0
27	0		0		0	0	0					0
28	7.0		1.0		0	0	0					0
29	0		.68		---	0	0					0
30	0		0		---	0	0					0
31	0	---	0		---	0	---		---			---
TOTAL	7.0	0	57.98	0	15.81	45.66	1.32	0	0	0	0	1.6
MEAN	.23	0	1.87	0	.56	1.47	.044	0	0	0	0	.053
MAX	7.0	0	52	0	9.5	21	.47	0	0	0	0	1.6
MIN	0	0	0	0	0	0	0	0	0	0	0	0
AC-FT	14	0	115	0	31	91	2.6	0	0	0	0	3.2

CAL YR 1974 TOTAL 526.90 MEAN 1.44 MAX 208 MIN 0 AC-FT 1050
WTR YR 1975 TOTAL 129.37 MEAN .35 MAX 52 MIN 0 AC-FT 257

11066440 SANTA ANA RIVER AT MISSION BOULEVARD, AT RIVERSIDE, CALIF.

LOCATION.--Lat 33°59'28", long 117°23'36", in Jurupa Grant, Riverside County, near right bank on downstream end of pier of Mission Boulevard Bridge between Rubidoux and Riverside.

DRAINAGE AREA.--810 mi^2 (2,098 km^2).

PERIOD OF RECORD.--February 1971 to current year.

GAGE.--Water-stage recorder. Datum of gage is 758.52 ft (231.197 m) above mean sea level.

EXTREMES.--Current year: Maximum discharge, 3,620 ft^3/s (103 m^3/s) Dec. 4 (gage height, 10.98 ft or 3.347 m); no flow most of year.
Period of record: Maximum discharge, 7,500 ft^3/s (212.4 m^3/s) Feb. 11, 1973 (gage height, 11.30 ft or 3.444 m), from rating curve extended above 5,400 ft^3/s (153 m^3/s); no flow most of each year.

REMARKS.--Records fair below 1,000 ft^3/s (28.3 m^3/s) and poor above. This is a project station the purpose of which is to record surface flow entering Riverside narrows from upper Santa Ana River drainage. See schematic diagram of Santa Ana River basin.

DISCHARGE, IN CUBIC FEET PER SECOND, WATER YEAR OCTOBER 1974 TO SEPTEMBER 1975
MEAN VALUES

DAY	OCT	NOV	DEC	JAN	FEB	MAR	APR	MAY	JUN	JUL	AUG	SEP
1			0		0	0	0	0	.10			
2			0		0	0	0	0	.01			
3			0		20	0	0	0	.15			
4			300		0	0	0	0	.22			
5			21		0	0	0	.18	.17			
6			0		0	32	3.5	.27	.12			
7			0		0	2.3	1.5	.24	.11			
8			0		0	234	.98	0	.43			
9			0		4.2	3.8	8.9	0	.52			
10			0		1.0	42	.59	0	.43			
11			0		0	.06	3.1	0	.64			
12			0		0	0	.20	0	.60			
13			0		0	0	.02	0	.40			
14			0		0	0	.09	0	.40			
15			0		0	0	.11	0	.33			
16			0		0	0	.08	0	.43			
17			0		0	0	1.4	0	.33			
18			0		0	0	.97	0	.23			
19			0		0	0	.03	0	.20			
20			0		0	0	0	.40	.09			
21			0		0	0	0	1.5	.08			
22			0		0	0	0	.94	.12			
23			0		0	0	0	.71	.02			
24			0		0	0	0	0	.48			
25			0		0	0	0	0	1.8			
26			0		0	0	0	0	.06			
27			0		0	0	0	0	.01			
28			0		0	0	0	0	0			
29			16		---	0	0	.06	0			
30			0		---	0	0	.02	0			
31		---	0		---	0	---	.04	---			---
TOTAL	0	0	337	0	25.2	314.16	21.47	4.36	8.48	0	0	0
MEAN	0	0	10.9	0	.90	10.1	.72	.14	.28	0	0	0
MAX	0	0	300	0	20	234	8.9	1.5	1.8	0	0	0
MIN	0	0	0	0	0	0	0	0	0	0	0	0
AC-FT	0	0	668	0	50	623	43	8.6	17	0	0	0

CAL YR 1974 TOTAL 2627.18 MEAN 7.20 MAX 792 MIN 0 AC-FT 5210
WTR YR 1975 TOTAL 710.67 MEAN 1.95 MAX 300 MIN 0 AC-FT 1410

Peak discharge (base, 500 ft^3/s).--Dec. 4 (1000) 3,620 ft^3/s (10.98 ft); Mar. 8 (1800) 1,920 ft^3/s (10.50 ft).

NOTE.--On days of flow, low-flow recession estimated following rise.

11066460 SANTA ANA RIVER AT MWD CROSSING, NEAR ARLINGTON, CALIF.

LOCATION.--Lat 33°58'04", long 117°26'46", in NE¼NE¼SW¼ sec.30, T.2 S., R.5 W., Riverside County, on left bank 300 ft (91 m) upstream from MWD crossing, 0.7 mi (1.1 km) downstream from Union Pacific Railroad bridge, 1.2 mi (1.9 km) upstream from bridge on Van Buren Boulevard, and 3.3 mi (5.3 km) north of Arlington.

DRAINAGE AREA.--854 mi^2 (2,112 km^2).

PERIOD OF RECORD.--March 1970 to current year.

GAGE.--Water-stage recorder and concrete low-flow control. Altitude of gage is 685 ft (209 m), from topographic map.

AVERAGE DISCHARGE.--5 years (1970-75), 35.0 ft^3/s (0.991 m^3/s), 25,360 acre-ft/yr (31.3 hm^3/yr).

EXTREMES.--Current year: Maximum discharge, 3,600 ft^3/s (102 m^3/s) Dec. 4 (gage height, 10.95 ft or 3.338 m), from rating extended above 600 ft^3/s (17.0 m^3/s) by flood routing; minimum daily, 18 ft^3/s (0.51 m^3/s) Oct. 17.

Period of record: Maximum discharge, 6,950 ft^3/s (197 m^3/s) Feb. 11, 1973 (gage height, 11.21 ft or 3.417 m), from rating extended above 600 ft^3/s (17.0 m^3/s) by flood routing; minimum daily, 16 ft^3/s (0.45 m^3/s) Aug. 18, 19, 1973.

Maximum discharge since at least 1927, 100,000 ft^3/s (2,830 m^3/s) Mar. 2, 1938, on basis of slope-area measurement at site 1.2 mi (1.9 km) downstream.

Flood of Jan. 22, 1862, 320,000 ft^3/s (9,060 m^3/s), by slope-conveyance measurement at site 8.1 mi (13.0 km) upstream. Stage at that site was 5 ft (2 m) higher than Mar. 2, 1938.

REMARKS.--Records good below 100 ft^3/s (2.83 m^3/s) and poor above. Flow partly regulated by Big Bear Lake (see sta 11049000). Natural streamflow affected by ground-water withdrawals, diversions for irrigation, and return flows from irrigated areas. The records at this station are equivalent to those collected at 11066500 Santa Ana River at Riverside Narrows, near Arlington minus the flow at 11066480 Riverside Water Quality Control Plant at Riverside Narrows, near Arlington. See schematic diagram of Santa Ana River basin.

DISCHARGE, IN CUBIC FEET PER SECOND, WATER YEAR OCTOBER 1974 TO SEPTEMBER 1975
MEAN VALUES

DAY	OCT	NOV	DEC	JAN	FEB	MAR	APR	MAY	JUN	JUL	AUG	SEP
1	19	25	21	28	27	26	25	25	22	23	20	20
2	20	22	20	26	29	26	25	25	23	23	20	19
3	20	22	21	26	150	25	27	24	23	22	20	19
4	21	23	523	24	41	26	28	25	21	23	20	19
5	21	22	49	26	35	28	39	24	23	22	20	19
6	21	22	30	25	30	92	59	27	22	22	20	19
7	21	21	26	25	28	34	38	24	21	22	20	20
8	22	21	25	26	27	671	51	24	23	22	20	22
9	21	22	24	24	53	125	79	24	22	22	20	20
10	21	21	24	24	42	223	33	23	23	21	20	21
11	21	20	24	25	29	73	32	22	23	22	20	21
12	21	20	24	26	28	38	26	23	23	23	20	21
13	21	21	24	26	27	36	28	23	23	22	20	20
14	21	19	24	27	28	35	26	23	23	22	21	20
15	21	21	24	26	27	34	27	22	23	23	21	21
16	19	21	24	25	27	33	27	24	24	22	21	21
17	18	21	25	26	27	32	28	23	24	22	21	21
18	19	22	25	25	27	31	28	22	24	22	21	20
19	19	23	24	24	26	31	28	24	25	22	21	20
20	20	22	24	25	25	30	28	24	24	22	21	20
21	21	21	25	26	25	30	27	23	22	23	21	20
22	22	21	25	26	24	29	27	23	22	21	21	19
23	23	20	25	26	23	29	26	24	24	22	20	19
24	22	20	25	26	24	29	25	21	23	21	20	19
25	21	20	25	26	25	28	27	24	23	21	20	20
26	22	21	24	26	26	28	24	22	25	21	20	19
27	22	21	24	26	29	28	28	23	24	21	20	20
28	28	21	37	26	26	27	25	22	22	20	19	20
29	22	20	64	27	---	27	24	22	22	20	20	20
30	22	20	29	28	---	26	24	22	23	20	20	20
31	24	---	30	29	---	26	---	22	---	20	20	---
TOTAL	656	636	1338	801	935	1956	939	723	689	674	628	599
MEAN	21.2	21.2	43.2	25.8	33.4	63.1	31.3	23.3	23.0	21.7	20.3	20.0
MAX	28	25	523	29	150	671	79	27	25	23	21	22
MIN	18	19	20	24	23	25	24	21	21	20	19	19
AC-FT	1300	1260	2650	1590	1850	3880	1860	1430	1370	1340	1250	1190

CAL YR 1974 TOTAL 13260 MEAN 36.3 MAX 999 MIN 17 AC-FT 26300
WTR YR 1975 TOTAL 10574 MEAN 29.0 MAX 671 MIN 18 AC-FT 20970

Peak discharge (base, 500 ft^3/s)

Date	Time	G.H.	Discharge	Date	Time	G.H.	Discharge
12-4	1200	10.95	3,600	3-10	2000	9.12	974
3-8	1930	10.22	3,060				

11066460 SANTA ANA RIVER AT MWD CROSSING, NEAR ARLINGTON, CALIF.--Continued

PERIOD OF RECORD.--Chemical analyses: October 1969 to current year.
Specific conductance: October 1969 to current year.

EXTREMES.--Current year:
Specific conductance: Maximum recorded, 1,240 micromhos Apr. 5; minimum recorded, 344 micromhos Apr. 8.
Period of record:
Specific conductance: Maximum recorded, 1,320 micromhos Nov. 4, 1969; minimum, 95 micromhos Nov. 27, 1970.

REMARKS.--Periods of missing specific conductance data due to probe or recorder malfunction.

WATER QUALITY DATA, WATER YEAR OCTOBER 1974 TO SEPTEMBER 1975

DATE	TIME	INSTANTANEOUS DISCHARGE (CFS)	DISSOLVED SOLIDS (RESIDUE AT 180 C) (MG/L)	SPECIFIC CONDUCTANCE (MICROMHOS)	TEMPERATURE (DEG C)
OCT.					
02...	1015	21	690	1100	19.7
09...	1010	22	684	1090	19.0
16...	0920	20	690	1100	16.8
24...	1400	23	696	1090	16.0
NOV.					
04...	1400	23	680	1090	20.7
11...	1030	21	700	1110	18.2
19...	1230	23	697	1100	19.5
25...	1100	21	701	1090	17.3
DEC.					
02...	1220	21	691	1100	17.9
04...	1000	1100	254	384	13.0
05...	1020	49	612	961	16.5
10...	1130	24	719	1130	17.3
18...	1230	25	696	1110	17.3
27...	1035	25	700	1110	14.5
JAN.					
03...	1000	26	695	1100	13.8
08...	1320	25	690	1100	17.3
13...	0850	26	690	1100	13.5
24...	1015	25	692	1100	15.8
29...	1300	26	683	1100	17.5
FEB.					
04...	0900	37	648	1040	14.5
10...	1135	37	652	1040	16.5
21...	0700	24	698	1100	14.8
26...	1220	26	694	1110	19.5
MAR.					
04...	1040	25	693	1110	17.0
06...	1045	89	439	720	16.7
08...	0950	133	225	338	15.3
11...	1330	49	591	938	17.0
19...	1415	31	687	1090	23.5
26...	1500	27	687	1100	22.0
31...	1330	27	690	1080	17.5
APR.					
09...	0930	80	365	608	13.2
14...	1105	26	681	1070	19.5
22...	1200	25	684	1090	18.5
MAY					
06...	0915	28	676	1070	18.0
12...	1310	22	685	1090	27.0
20...	0845	25	700	1090	18.0
28...	1405	20	668	1090	27.0
JUNE					
02...	1130	25	681	1090	21.5
12...	0930	23	691	1100	20.0
16...	1320	26	694	1090	20.0
25...	0900	23	699	1100	18.7
JULY					
01...	0950	23	708	1100	21.0
17...	1340	21	694	1100	27.0
AUG.					
05...	1150	21	697	1090	26.0
18...	0900	21	720	1110	19.0
SEP.					
02...	1000	20	720	1100	20.5
15...	1015	21	716	1100	21.2

11066460 SANTA ANA RIVER AT MWD CROSSING, NEAR ARLINGTON, CALIF.--Continued

SPECIFIC CONDUCTANCE (MICROMHOS/CM AT 25 DEG. C), WATER YEAR OCTOBER 1974 TO SEPTEMBER 1975

	FEBRUARY			MARCH			APRIL			MAY		
DAY	MAX	MIN	MEAN	MAX	MIN	MEAN	MAX	MIN	MEAN	MAX	MIN	MEAN
1				---	---	---	1090	1080	1090	1100	1040	1080
2				---	---	---	1090	1000	1080	1100	1080	1090
3				---	---	---	1090	1020	1070	1090	1080	1090
4				---	---	---	1100	1010	1060	1100	1070	1090
5				---	---	---	1240	362	999	1100	1070	1090
6				---	---	---	1020	550	841	1080	1060	1070
7				---	---	---	1080	874	1000	---	---	---
8				---	---	---	1120	344	939	---	---	---
9				---	---	---	1040	396	752	---	---	---
10				---	---	---	1070	746	1030	---	---	---
11				---	---	---	1130	1010	1060	---	---	---
12				---	---	---	1100	1010	1080	1090	1070	1080
13				---	---	---	1090	982	1090	1100	1070	1090
14				---	---	---	1090	1040	1070	1100	1060	1080
15				---	---	---	1080	1060	1070	1110	1090	1100
16				---	---	---	1090	1070	1080	1120	1070	1090
17				---	---	---	1090	1010	1070	1110	1080	1100
18				---	---	---	1150	1080	1100	1120	1080	1110
19				---	---	---	1100	1070	1090	1110	1100	1110
20				---	---	---	1160	1090	1100	1130	1080	1110
21				---	---	---	1100	1080	1090	1120	1100	1110
22				---	---	---	1100	1090	1090	1110	1090	1100
23				---	---	---	1120	1090	1100	1100	1090	1100
24				---	---	---	1120	1020	1090	1120	1090	1100
25				---	---	---	1110	1090	1100	1100	1080	1090
26				1120	1100	1110	1120	1100	1110	1090	1080	1090
27				1100	1070	1080	1100	1010	1070	1090	1080	1090
28				1100	1060	1080	1110	1080	1100	1090	1070	1080
29				1110	1080	1090	1110	1060	1090	1090	1080	1090
30				1100	1070	1090	1110	993	1050	1100	1070	1100
31				1100	1070	1090	---	---	---	1120	1100	1100
MONTH				---	---	---	1240	344	1050	1130	1040	1090

	JUNE			JULY			AUGUST			SEPTEMBER		
DAY	MAX	MIN	MEAN	MAX	MIN	MEAN	MAX	MIN	MEAN	MAX	MIN	MEAN
1	1120	1060	1100	1110	1100	1100	---	---	---	1120	1100	1110
2	1120	1090	1100	1110	1030	1090	---	---	---	1110	1100	1100
3	1100	1090	1090	1110	1050	1090	---	---	---	1110	1080	1100
4	1100	1090	1100	1100	1080	1090	---	---	---	1110	1090	1100
5	1120	1090	1100	1090	1050	1080	1120	1080	1100	1110	1090	1100
6	1110	1090	1100	1100	1070	1090	1110	1100	1100	1110	1090	1100
7	1110	1090	1100	1110	1090	1100	1120	1110	1110	1120	1090	1100
8	1100	1100	1100	1100	1090	1100	1120	1100	1110	1120	1040	1100
9	1110	1100	1100	1100	1070	1090	1120	1100	1110	1110	1100	1110
10	1110	1100	1100	1100	1090	1100	1120	1110	1120	1110	1090	1100
11	1110	1100	1100	1100	1090	1090	1120	1110	1110	1120	1100	1110
12	1120	1100	1110	1100	1090	1090	1130	1110	1120	1110	1050	1100
13	1110	1100	1100	1130	1080	1100	1120	1100	1110	1110	1100	1100
14	1110	1090	1100	1120	1090	1100	1120	1110	1120	1110	1090	1110
15	1100	1090	1100	1110	1080	1100	1130	1110	1120	1120	1100	1110
16	1100	1090	1090	1110	1060	1080	1130	1080	1110	1110	1100	1110
17	1100	1090	1100	1120	1100	1110	1120	1110	1120	1110	1100	1100
18	1110	1070	1090	1120	1100	1110	1120	1100	1110	1110	1100	1110
19	1110	1080	1090	1120	1110	1110	1120	1110	1110	1110	1090	1100
20	1110	1100	1110	1120	1100	1110	1120	1100	1110	1110	1100	1110
21	1120	1100	1110	1120	1100	1110	1120	1100	1110	1110	1090	1110
22	1110	1100	1110	1120	1100	1110	1120	1100	1110	1110	1100	1110
23	1110	1090	1100	1110	1090	1100	1120	1100	1110	1120	1110	1110
24	1110	1090	1100	1120	1100	1110	1120	1100	1120	1120	1100	1110
25	1120	1100	1110	1140	1120	1130	1120	1080	1110	1120	1100	1110
26	1110	1100	1110	1140	1110	1130	1120	1110	1110	1110	1100	1110
27	1140	1090	1110	---	---	---	1120	1090	1110	1110	1100	1110
28	1130	1100	1110	---	---	---	1120	1110	1120	1110	1100	1110
29	1120	1100	1110	---	---	---	1120	1100	1110	1110	1100	1100
30	1120	1100	1110	---	---	---	1120	1100	1110	1110	1090	1100
31	---	---	---	---	---	---	1120	1100	1110	---	---	---
MONTH	1140	1060	1100	1140	1030	1100	1130	1080	1110	1120	1040	1110

11066480 RIVERSIDE WATER QUALITY CONTROL PLANT AT RIVERSIDE NARROWS, NEAR ARLINGTON, CALIF.

LOCATION.--Lat 33°57'53", long 117°27'26", in SE¼NE¼SE¼ sec.25, T.2 S., R.6 W., Riverside County, at effluent end of chlorine contact chambers, 0.4 mi (0.6 km) upstream from Van Buren Boulevard, and 3.1 mi (5.0 km) northwest of Arlington.

PERIOD OF RECORD.--October 1947 to current year. Prior to May 25, 1967, published as "Sheehan ditch."

GAGE.--Water-stage recorders and concrete controls for plants Nos. 1 and 2. Altitude of gage is 690 ft (210 m), from topographic map.

EXTREMES.--Period of record: Maximum daily discharge, 32 ft^3/s (0.91 m^3/s) Apr. 6, 1969; minimum daily, 17 ft^3/s (0.48 m^3/s) May 11, June 8, 1969.

REMARKS.--Records good. Discharge reported herein is total effluent from city of Riverside's Water Quality Control Plants Nos. 1 and 2, released to river 1.0 mi (1.6 km) downstream from Santa Ana River at MWD crossing (see sta 11066460).

DISCHARGE, IN CUBIC FEET PER SECOND, WATER YEAR OCTOBER 1974 TO SEPTEMBER 1975
MEAN VALUES

DAY	OCT	NOV	DEC	JAN	FEB	MAR	APR	MAY	JUN	JUL	AUG	SEP
1	29	29	25	25	26	25	28	28	26	27	28	23
2	29	27	28	26	26	24	28	28	29	27	24	26
3	29	26	27	27	29	26	28	25	27	27	23	26
4	29	29	31	26	28	27	28	24	27	23	27	26
5	27	28	27	25	28	28	27	28	27	23	27	27
6	26	28	27	28	28	28	25	28	27	23	27	25
7	29	28	26	27	28	28	28	29	25	27	27	24
8	29	28	25	27	27	29	28	28	23	28	27	27
9	28	26	28	28	27	26	29	28	27	28	24	27
10	28	25	27	28	28	30	28	25	27	28	23	27
11	28	30	27	26	28	28	27	24	27	28	27	27
12	27	28	27	26	28	28	25	28	27	26	26	26
13	26	28	26	28	28	28	25	28	27	23	26	25
14	29	28	25	28	29	28	28	28	24	27	26	24
15	28	26	25	28	28	26	26	28	23	28	26	27
16	30	26	27	28	24	26	27	28	27	28	23	27
17	30	25	27	28	25	28	27	26	27	27	22	27
18	27	27	28	27	28	28	27	25	27	28	26	27
19	27	27	28	26	27	28	26	29	27	24	26	26
20	26	27	27	29	25	28	25	28	27	23	26	25
21	29	27	25	28	24	28	26	28	24	27	26	24
22	28	27	24	28	26	26	28	28	23	28	26	27
23	29	26	25	28	25	25	26	29	27	27	23	26
24	29	25	25	27	27	29	27	26	27	28	22	27
25	29	27	21	27	31	28	24	24	27	28	26	27
26	27	27	23	26	26	28	27	26	28	25	26	27
27	27	27	24	28	27	28	24	30	28	24	26	25
28	29	24	24	28	27	27	28	30	24	28	26	24
29	29	25	23	28	---	27	28	28	23	29	26	27
30	29	25	25	28	---	25	29	28	28	27	23	26
31	27	---	25	28	---	27	---	27	---	27	22	---
TOTAL	873	806	802	845	758	845	807	847	787	821	783	779
MEAN	28.2	26.9	25.9	27.3	27.1	27.3	26.9	27.3	26.2	26.5	25.3	26.0
MAX	30	30	31	29	31	30	29	30	29	29	28	27
MIN	26	24	21	25	24	24	24	24	23	23	22	23
AC-FT	1730	1600	1590	1680	1500	1680	1600	1680	1560	1630	1550	1550

CAL YR 1974 TOTAL 9933 MEAN 27.2 MAX 31 MIN 21 AC-FT 19700
WTR YR 1975 TOTAL 9753 MEAN 26.7 MAX 31 MIN 21 AC-FT 19350

11066480 RIVERSIDE WATER QUALITY CONTROL PLANT AT RIVERSIDE NARROWS, NEAR ARLINGTON, CALIF.--Continued

PERIOD OF RECORD.--Chemical analyses: October 1969 to current year.
Specific conductance: October 1969 to current year.

EXTREMES.--Current year:
Specific conductance: Maximum recorded, 1,310 micromhos Nov. 15; minimum, 879 micromhos Feb. 17.
Period of record:
Specific conductance: Maximum, 1,740 micromhos Oct. 29, 1971; minimum, 672 micromhos May 5, 1971.

WATER QUALITY DATA, WATER YEAR OCTOBER 1974 TO SEPTEMBER 1975

DATE	TIME	INSTANTANEOUS DISCHARGE (CFS)	DISSOLVED SOLIDS (RESIDUE AT 180 C) (MG/L)	SPECIFIC CONDUCTANCE (MICROMHOS)	TEMPERATURE (DEG C)
OCT.					
02...	0940	34	651	1110	26.0
09...	1120	36	562	979	25.8
16...	1040	36	606	1040	25.3
24...	1435	34	598	999	25.5
NOV.					
04...	1225	37	572	954	24.3
11...	1000	33	693	1140	22.5
19...	1200	34	710	1160	24.0
25...	0920	29	614	1010	22.0
DEC.					
02...	1420	34	648	1110	22.0
10...	1240	36	573	956	23.0
18...	1210	35	600	1010	22.0
27...	1050	32	554	937	19.2
JAN.					
03...	0840	27	617	1010	17.0
08...	1135	34	541	926	21.2
13...	0825	21	548	909	18.5
24...	0900	29	716	1170	20.5
29...	1245	34	679	1150	21.0
FEB.					
04...	1100	36	576	994	20.5
10...	1200	38	573	1000	21.0
21...	0630	13	607	1020	21.5
28...	1435	34	545	956	23.2
MAR.					
04...	1110	36	674	1140	21.8
10...	1115	38	548	927	21.0
19...	1300	34	606	1050	23.0
27...	1000	35	576	1020	20.5
APR.					
01...	0900	26	577	1020	20.5
08...	0910	26	631	1070	20.5
14...	0920	34	555	978	21.5
22...	0905	29	689	1150	21.8
MAY					
06...	0900	37	679	1140	21.0
12...	1400	35	627	1120	25.3
20...	0930	34	675	1110	23.0
28...	1330	33	595	1040	26.0
JUNE					
02...	1335	35	609	1050	25.5
12...	0900	27	640	1080	25.0
16...	1310	36	594	1020	24.5
25...	0920	31	656	1090	25.0
JULY					
02...	1300	36	645	1090	27.0
17...	1315	38	663	1090	27.2
AUG.					
04...	0925	25	658	1080	27.0
18...	1000	30	651	1050	25.5
SEP.					
03...	1000	31	612	997	26.5
15...	1005	36	631	1020	26.5

11066480 RIVERSIDE WATER QUALITY CONTROL PLANT AT RIVERSIDE NARROWS, NEAR ARLINGTON, CALIF.--Continued

SPECIFIC CONDUCTANCE (MICROMHOS/CM AT 25 DEG. C), WATER YEAR OCTOBER 1974 TO SEPTEMBER 1975

	OCTOBER			NOVEMBER			DECEMBER			JANUARY		
DAY	MAX	MIN	MEAN	MAX	MIN	MEAN	MAX	MIN	MEAN	MAX	MIN	MEAN
1	1130	1020	1070	972	922	952	1180	1090	1130	1010	954	975
2	1140	1070	1110	1050	964	997	1180	1070	1120	1040	957	992
3	1110	1020	1060	1050	1000	1030	1190	1150	1170	1030	991	1020
4	1060	998	1040	1020	954	996	1190	1070	1110	1040	967	1010
5	1060	1010	1040	1110	1010	1050	1120	1070	1090	1040	969	1000
6	1020	945	978	1120	1060	1090	1080	1020	1040	968	900	941
7	983	903	948	1100	1050	1080	1030	959	989	977	927	956
8	1030	962	991	1180	1050	1110	964	918	942	976	922	947
9	1030	959	989	1210	1150	1180	983	895	936	1020	926	970
10	1020	922	961	1220	1160	1190	1020	950	987	1020	955	991
11	1020	956	991	1170	1120	1150	1020	957	987	1000	949	979
12	1010	952	989	1200	1110	1160	1020	960	987	966	913	937
13	1040	969	1000	1250	1160	1190	1040	988	1010	976	882	928
14	1040	987	1030	1240	1190	1210	995	950	973	999	931	967
15	1060	983	1020	1310	1200	1240	1030	937	980	1100	976	1020
16	1080	1010	1050	1240	1210	1230	1050	984	1020	1150	1050	1100
17	1090	1030	1060	1230	1180	1200	1120	1000	1040	1180	1130	1160
18	1110	1030	1070	1200	1140	1180	1110	1010	1040	1190	1120	1170
19	1120	1060	1090	1230	1160	1190	1080	991	1030	1170	1130	1150
20	1060	972	1010	1220	1130	1180	1160	1070	1110	1220	1110	1160
21	1010	931	972	1220	1160	1200	1160	1080	1120	1220	1160	1200
22	1040	944	990	1220	1180	1210	1080	1020	1040	1240	1160	1210
23	1050	983	1010	1200	1100	1140	1020	944	989	1240	1180	1220
24	1050	993	1020	1100	1020	1070	1020	960	995	1220	1140	1180
25	1030	951	997	1110	996	1050	998	918	951	1210	1150	1190
26	1060	1000	1030	1140	1080	1120	991	902	944	1190	1110	1150
27	1050	986	1020	1150	1110	1140	1020	937	981	1220	1130	1170
28	1010	935	974	1170	1140	1160	1030	974	1000	1220	1170	1210
29	1020	978	1010	1250	1140	1180	974	918	946	1280	1150	1200
30	1020	970	996	1260	1180	1210	971	884	921	1270	1190	1220
31	1010	946	972	---	---	---	1000	954	981	1190	1130	1150
MONTH	1140	903	1020	1310	922	1140	1190	884	1020	1280	882	1080

	FEBRUARY			MARCH			APRIL			MAY		
DAY	MAX	MIN	MEAN	MAX	MIN	MEAN	MAX	MIN	MEAN	MAX	MIN	MEAN
1	1160	1050	1110	1010	946	986	1040	986	1020	1200	1160	1180
2	1030	979	1010	1070	969	1010	1010	960	986	1220	1160	1200
3	1040	934	980	1170	1050	1090	1070	1020	1050	1210	1160	1190
4	1090	994	1040	1210	1100	1160	1080	1030	1060	1190	1150	1180
5	1090	1010	1050	1210	1120	1150	1090	1060	1080	1200	1130	1170
6	1090	1050	1070	1150	1030	1070	1140	1040	1090	1210	1140	1170
7	1120	1080	1100	1070	1030	1050	1180	1100	1130	1250	1170	1210
8	1130	1080	1100	1070	936	1020	1100	1020	1070	1240	1180	1220
9	1070	984	1030	965	904	934	1090	1030	1070	1220	1160	1200
10	1090	999	1040	993	926	963	1040	1010	1030	1160	1080	1120
11	1090	1000	1040	1090	942	997	1020	964	993	1160	1080	1120
12	1080	1020	1060	1090	1000	1050	1020	986	1010	1170	1100	1140
13	1080	1010	1040	1090	1020	1050	998	944	979	1140	1070	1110
14	1050	972	1000	1060	1020	1050	996	936	971	1140	1080	1120
15	1000	963	984	1050	1000	1040	1040	962	989	1160	1070	1110
16	977	919	940	1040	965	1000	1040	996	1020	1160	1090	1130
17	955	879	923	1070	962	1010	1130	1020	1070	1090	1020	1050
18	1050	904	967	1130	1050	1080	1140	1110	1130	1040	987	1020
19	1040	965	1010	1130	1050	1090	1120	1060	1100	1100	997	1050
20	1060	993	1020	1120	1070	1100	1100	1060	1090	1140	1060	1110
21	1050	993	1020	1130	1080	1120	1160	1030	1090	1120	1000	1050
22	1010	937	967	1130	1020	1060	1180	1110	1150	1080	964	1020
23	936	886	918	1020	962	988	1170	1110	1140	1120	1060	1090
24	1020	891	952	1030	910	963	1150	1100	1130	1110	1050	1090
25	1070	966	1010	1040	965	1000	1140	1080	1110	1110	1060	1090
26	1070	979	1020	1060	949	990	1130	1080	1120	1070	1020	1050
27	1020	927	966	1070	989	1020	1120	1060	1100	1060	985	1040
28	993	922	968	1050	972	1020	1170	1050	1110	1100	1030	1060
29	---	---	---	1060	962	1020	1230	1150	1180	1140	1050	1090
30	---	---	---	959	917	948	1250	1190	1220	1140	1080	1120
31	---	---	---	1030	923	973	---	---	---	1140	1070	1110
MONTH	1160	879	1010	1210	904	1030	1250	936	1080	1250	964	1120

11066480 RIVERSIDE WATER QUALITY CONTROL PLANT AT RIVERSIDE NARROWS, NEAR ARLINGTON, CALIF.--Continued

SPECIFIC CONDUCTANCE (MICROMHOS/CM AT 25 DEG. C), WATER YEAR OCTOBER 1974 TO SEPTEMBER 1975

	JUNE			JULY			AUGUST			SEPTEMBER		
DAY	MAX	MIN	MEAN	MAX	MIN	MEAN	MAX	MIN	MEAN	MAX	MIN	MEAN
1	1140	1110	1130	1130	1030	1070	1160	1040	1110	1040	990	1020
2	1130	1040	1090	1130	1080	1100	1160	1070	1130	1040	954	1000
3	1160	1100	1130	1140	1070	1110	1130	1040	1090	1090	992	1030
4	1160	1100	1130	1190	1100	1140	1130	1030	1080	1090	1020	1060
5	1140	1050	1090	1200	1120	1160	1180	1110	1150	1090	1020	1060
6	1110	1060	1090	1150	1080	1130	1180	1090	1140	1110	1020	1070
7	1110	1080	1100	1150	1050	1110	1180	1080	1130	1110	1040	1080
8	1080	1020	1050	1230	1130	1180	1150	1080	1130	1120	978	1040
9	1110	999	1060	1210	1120	1170	1150	1080	1130	1120	1020	1070
10	1110	1040	1080	1190	1120	1160	1140	1070	1110	1060	984	1030
11	1130	1080	1110	1210	1120	1170	1140	1040	1100	1140	1010	1060
12	1130	1050	1090	1210	1120	1160	1160	1090	1140	1160	1080	1120
13	1160	1120	1150	1180	1090	1140	1170	1080	1140	1120	1060	1100
14	1160	1090	1130	1160	1070	1110	1170	1080	1130	1110	1030	1070
15	1130	1070	1110	1160	1080	1130	1140	1080	1120	1120	996	1060
16	1090	1020	1060	1190	1120	1160	1130	1070	1100	1130	1080	1100
17	1170	1070	1100	1190	1090	1140	1100	1030	1080	1120	1040	1080
18	1170	1070	1120	1150	1070	1120	1080	1020	1060	1120	1020	1070
19	1120	1040	1080	1150	1050	1110	1100	1040	1080	1090	1040	1070
20	1080	1030	1060	1160	1080	1130	1120	1070	1100	1060	998	1030
21	1080	1030	1070	1160	1090	1130	1130	1050	1090	1030	970	1010
22	1080	1030	1060	1220	1090	1160	1130	1040	1080	1040	968	1010
23	1080	1050	1070	1220	1110	1170	1100	1020	1060	1050	992	1030
24	1120	1040	1080	1180	1080	1140	1040	982	1020	1080	1000	1040
25	1110	1070	1100	1210	1110	1160	1050	966	1020	1120	1010	1060
26	1150	1070	1110	1150	1060	1120	1090	1020	1060	1150	1070	1120
27	1240	1140	1180	1140	1070	1110	1100	1040	1080	1150	1090	1130
28	1210	1120	1160	1130	1040	1090	1100	1020	1070	1140	1070	1120
29	1160	1070	1110	1170	1100	1150	1090	1040	1070	1130	1060	1110
30	1080	980	1030	1170	1090	1140	1090	1020	1060	1120	1050	1090
31	---	---	---	1190	1090	1140	1050	1020	1040	---	---	---
MONTH	1240	980	1100	1230	1030	1140	1180	966	1090	1160	954	1060

11067890 SANTA ANA RIVER AT PRADO PARK, NEAR CORONA, CALIF.

LOCATION.--Lat 33°55'42", long 117°35'44", in Jurupa Grant, Riverside County, in Prado Park on right bank 0.4 mi (0.6 km) upstream from Auburndale Bridge, and 4.1 mi (6.6 km) northwest of Corona.

DRAINAGE AREA.--1,010 mi^2 (2,616 km^2).

PERIOD OF RECORD.--March 1971 to current year. Records May 1930 to November 1966 (irrigation seasons only), October 1966 to September 1968 at site 0.4 mi (0.6 km) downstream (at Auburndale Bridge, sta 11068000), equivalent if diversion to Durkee ditch added.

GAGE.--Water-stage recorder. Altitude of gage is 560 ft (171 m), from topographic map.

EXTREMES.--Current year: Maximum discharge, 2,720 ft^3/s (77.0 m^3/s) Dec. 4 (gage height, 5.55 ft or 1.692 m); minimum daily, 22 ft^3/s (0.62 m^3/s) Oct. 1, Aug. 11.
Period of record: Maximum discharge, about 5,400 ft^3/s (153 m^3/s) Feb. 11, 1973, by flood routing; minimum daily, 10 ft^3/s (0.28 m^3/s) Aug. 7, Sept. 23, 1971.

REMARKS.--Records good below 100 ft^3/s (2.83 m^3/s) and poor above. Flow partly regulated by Big Bear Lake (see sta 11049000). Natural streamflow affected by ground-water withdrawals, diversions for irrigation, and return flows from irrigated areas. See schematic diagram of Santa Ana River basin.

DISCHARGE, IN CUBIC FEET PER SECOND, WATER YEAR OCTOBER 1974 TO SEPTEMBER 1975

DAY	OCT	NOV	DEC	JAN	FEB	MAR	APR	MAY	JUN	JUL	AUG	SEP
1	22	48	38	50	61	52	59	54	29	31	27	25
2	25	44	40	52	62	51	58	54	33	32	25	27
3	27	42	42	53	120	52	57	53	37	31	25	30
4	28	41	664	54	89	56	59	50	38	30	30	28
5	29	41	149	54	81	62	54	54	40	27	27	29
6	26	39	79	52	71	118	82	45	40	28	27	30
7	27	37	72	53	68	93	72	46	37	29	30	32
8	28	38	60	53	66	380	63	47	34	35	29	34
9	28	38	60	50	92	271	136	46	35	34	26	35
10	29	37	64	51	99	162	79	46	35	32	23	34
11	31	38	66	52	76	134	72	41	36	33	22	32
12	30	38	64	52	69	77	66	46	36	32	24	32
13	28	38	66	55	64	69	60	48	36	30	23	32
14	34	38	57	57	65	84	59	48	35	31	24	31
15	33	38	51	59	61	71	60	48	33	31	25	31
16	37	38	50	58	56	71	61	48	39	31	24	31
17	34	38	41	57	56	71	63	47	39	33	24	30
18	29	37	38	58	58	71	60	47	38	29	25	31
19	33	39	39	56	56	71	60	46	39	26	26	31
20	32	37	38	57	58	71	57	45	38	28	27	27
21	35	40	39	59	58	67	57	45	39	27	28	27
22	35	39	44	54	52	84	59	44	39	28	27	35
23	36	37	44	54	54	68	57	43	40	28	27	30
24	36	32	41	59	55	66	59	41	41	28	26	30
25	35	34	39	57	57	66	56	39	37	28	26	31
26	38	35	37	57	56	65	49	37	36	28	25	30
27	37	38	35	59	60	65	46	36	35	25	25	33
28	47	38	48	58	56	62	48	36	35	23	24	37
29	59	36	109	58	------	59	50	35	28	23	24	38
30	56	30	70	59	------	59	52	35	30	23	23	33
31	48	------	60	63	------	58	------	33	------	24	23	------
TOTAL	1,052	1,143	2,344	1,720	1,876	2,806	1,870	1,383	1,087	898	791	936
MEAN	33.9	38.1	75.6	55.5	67.0	90.5	62.3	44.6	36.2	29.0	25.5	31.2
MAX	59	48	664	63	120	380	136	54	41	35	30	38
MIN	22	30	35	50	52	51	46	33	28	23	22	25
AC-FT	2,090	2,270	4,650	3,410	3,720	5,570	3,710	2,740	2,160	1,780	1,570	1,860

CAL YR 1974 TOTAL 20,652 MEAN 56.6 MAX 1,610 MIN 17 AC-FT 40,960
WTR YR 1975 TOTAL 17,906 MEAN 49.1 MAX 664 MIN 22 AC-FT 35,520

Peak discharge (base, 500 ft^3/s).--Dec. 4 (1645) 2,720 ft^3/s (5.55 ft); Mar. 8 (2345) 1,780 ft^3/s (5.24 ft).

11069000 LAKE HEMET NEAR IDYLLWILD, CALIF.

LOCATION.--Lat 33°39'56", long 116°42'19", in SE¼SW¼NE¼ sec.7, T.6 S., R.3 E., Riverside County, on upstream face near right end of dam on South Fork San Jacinto River, 5 mi (8 km) southeast of Idyllwild, and 6.5 mi (10.5 km) upstream from mouth.

DRAINAGE AREA.--65.6 mi^2 (169.9 km^2).

PERIOD OF RECORD.--October 1961 to current year.

GAGE.--Nonrecording gage read once daily. Datum of gage is 4,201.5 ft (1,280.617 m) above mean sea level (levels by Lake Hemet Municipal Water District).

EXTREMES.--Current year: Maximum contents observed, 7,080 acre-ft (8.73 hm^3) May 19 to June 6 (elevation, 4,318.75 ft or 1,316.355 m); minimum, 6,000 acre-ft (7.40 hm^3) Sept. 6, 7 (elevation, 4,314.58 ft or 1,315.084 m).

Period of record: Maximum contents, 13,879 acre-ft (17.1 hm^3) Feb. 25, 1969 (elevation, 4,337.58 ft or 1,322.094 m); minimum, 264 acre-ft (326 m^3) Nov. 19, 1962, Nov. 19, 1963 (elevation, 4,266.9 ft or 1,300.55 m).

REMARKS.--Lake is formed by single-arch dam. Dam was completed to a height of 110 ft (33.5 m) in 1893; raised to 122.5 ft (37.34 m) in 1895, and to 135 ft (41.1 m) in 1923. Capacity table is dated February 1932 (furnished by Lake Hemet Municipal Water District). Lowest sluice gate silted, elevation, 4,222.6 ft (1,287.05 m). Capacity below spillway level, elevation, 4,333.0 ft (1,320.70 m), 11,882 acre-ft (14.7 hm^3). Water is released from lake to South Fork San Jacinto River for domestic use and irrigation in the Hemet-San Jacinto Valley. See schematic diagram of Santa Ana River basin.

COOPERATION.--Elevations furnished by Lake Hemet Municipal Water District.

MONTHEND ELEVATION AND CONTENTS, WATER YEAR OCTOBER 1974 TO SEPTEMBER 1975

Date	Elevation (feet)a	Contents (acre-feet)	Change in contents (acre-feet)
Sept. 30	4,316.83	6,570	--
Oct. 31	4,316.00	6,360	-210
Nov. 30	4,315.67	6,270	-90
Dec. 31	4,316.00	6,360	+90
CAL YR 1974	--	--	-670
Jan. 31	4,316.25	6,420	+60
Feb. 29	4,316.75	6,550	+130
Mar. 31	4,317.67	6,790	+240
Apr. 30	4,318.58	7,030	+240
May 31	4,318.75	7,080	+50
June 30	4,317.92	6,860	-220
July 31	4,316.58	6,510	-350
Aug. 31	4,314.92	6,080	-430
Sept. 30	4,314.92	6,080	0
WTR YR 1975	--	--	-490

a Elevation at 0800.

11069500 SAN JACINTO RIVER NEAR SAN JACINTO, CALIF.

LOCATION.--Lat 33°44'10", long 116°49'26", in NE¼NE¼SE¼ sec.13, T.5 S., R.1 E., Riverside County, on right bank 350 ft (107 m) upstream from bridge on State Highway 74, 1 mi (2 km) downstream from North Fork, and 8.3 mi (13.4 km) southeast of San Jacinto.

DRAINAGE AREA.--141 mi^2 (365 km^2).

PERIOD OF RECORD.--October 1920 to February 1927, March 1927 to current year. Records since Oct. 1, 1969, equivalent to prior records if lower diversion is deducted from flow past station. Combined records of river and diversions, October 1948 to current year. Monthly discharge only for October 1920 and July to September 1926, published in WSP 1315-B.

GAGE.--Water-stage recorder on river; water-stage recorder on upper canal. Datum of gage is 1,982.75 ft (604.342 m) above mean sea level (Corps of Engineers bench mark). See WSP 1735 for history of changes prior to Jan. 23, 1948. Prior to Oct. 1, 1969, at site 350 ft (107 m) downstream at same datum.

AVERAGE DISCHARGE (River only).--48 years (1920-26, 1927-69), 18.0 ft^3/s (0.510 m^3/s), 13,040 acre-ft/yr (16.1 hm^3/yr); 6 years (1969-75), 5.08 ft^3/s (0.144 m^3/s), 3,680 acre-ft/yr (4.54 hm^3/yr).

(Combined river and diversions).--27 years (1948-75), 17.9 ft^3/s (0.507 m^3/s), 12,970 acre-ft/yr (16.0 hm^3/yr).

EXTREMES (River only).--Current year: Maximum discharge, 112 ft^3/s (3.17 m^3/s) Mar. 8 (gage height, 9.71 ft or 2.957 m); no flow many days.

Period of record: Maximum discharge, 45,000 ft^3/s (1,270 m^3/s) Feb. 16, 1927, on basis of slope-area measurement of maximum flow; no flow for several months in each year.

(Combined flow).--Current year: Maximum discharge, 115 ft^3/s (3.26 m^3/s) Mar. 8; minimum daily, 0.03 ft^3/s (<0.001 m^3/s) Jan. 24 to Feb. 2.

Period of record: Maximum discharge, 7,420 ft^3/s (210 m^3/s) Jan. 25, 1969; no flow at times in 1951, 1952, 1957.

REMARKS.--Records fair. Flow partly regulated by Lake Hemet (see sta 11069000). Lake Hemet Municipal Water District's upper canal diverts 4.0 mi (6.4 km) above station. Fairview Land and Water Co. diverted 8 acre-ft (9,860 m^3) above station for domestic use during current year. Diversion above station began prior to 1920. Since relocation of station above lower diversion on Oct. 1, 1969, the records of lower diversion are available at Lake Hemet Municipal Water District. See schematic diagram of Santa Ana River basin. Combined records are equivalent for period of record. For records of combined daily discharge of San Jacinto River and diversion, see following page.

DISCHARGE, IN CUBIC FEET PER SECOND, WATER YEAR OCTOBER 1974 TO SEPTEMBER 1975
MEAN VALUES

DAY	OCT	NOV	DEC	JAN	FEB	MAR	APR	MAY	JUN	JUL	AUG	SEP
1	0	.34	.01	.04	.03	.34	6.2	17	.98	.03		
2	0	.41	.01	.04	.03	.34	4.8	16	.95	.03		
3	0	.41	.01	.04	.18	.34	4.0	16	.92	.02		
4	0	.30	1.7	.04	.50	.34	4.8	17	.90	.02		
5	0	.30	1.7	.04	1.0	.37	4.4	15	.87	.01		
6	0	.34	.45	.04	1.0	2.6	8.6	12	.84	.01		
7	0	.37	.22	.04	.62	8.7	8.6	8.6	.83	0		
8	0	.41	.09	.04	.50	33	8.8	7.9	.82	0		
9	0	.50	.08	.03	1.0	34	15	7.3	.80	0		
10	0	.50	.08	.03	3.0	16	14	6.7	.78	0		
11	0	.50	.07	.03	2.7	16	12	6.4	.77	0		
12	0	.50	.06	.03	1.2	15	14	6.2	.76	0		
13	0	.50	.06	.03	.87	8.2	15	6.2	.75	0		
14	0	.50	.05	.02	.74	7.3	16	5.7	.75	0		
15	0	.50	.05	.02	.74	5.7	17	4.8	.75	0		
16	0	.58	.04	.02	.74	6.2	17	3.4	.75	0		
17	0	.58	.03	.03	.74	6.7	17	1.6	.74	0		
18	0	.62	.03	.03	.80	5.0	15	1.0	.62	0		
19	0	.62	.03	.03	.74	7.6	17	1.0	.11	0		
20	0	.62	.03	.03	.74	12	16	1.4	.09	0		
21	0	.58	.02	.04	.68	12	20	4.2	.08	0		
22	0	.68	.03	.04	.62	29	25	3.0	.07	0		
23	0	.68	.03	.04	.62	24	22	1.7	.06	0		
24	0	.62	.03	.03	.58	15	21	1.4	.06	0		
25	0	.62	.02	.03	.54	18	22	1.4	.05	0		
26	0	.50	.02	.03	.54	20	19	1.3	.05	0		
27	0	.09	.03	.03	.58	11	16	2.7	.04	0		
28	0	.05	.04	.03	.54	8.2	15	1.5	.04	0		
29	.03	.05	.04	.03	---	5.2	16	1.3	.04	0		
30	4.0	.05	.04	.03	---	3.8	17	1.2	.03	0		
31	.68	---	.04	.03	---	3.2	---	1.1	---	0		---
TOTAL	4.71	13.32	5.14	1.01	22.57	335.13	428.2	182.0	15.30	.12	0	0
MEAN	.15	.44	.17	.033	.81	10.8	14.3	5.87	.51	.004	0	0
MAX	4.0	.68	1.7	.04	3.0	34	25	17	.98	.03	0	0
MIN	0	.05	.01	.02	.03	.34	4.0	1.0	.03	0	0	0
AC-FT	9.3	26	10	2.0	45	665	849	361	30	.2	0	0

CAL YR 1974 TOTAL 1196.12 MEAN 3.28 MAX 87 MIN 0 AC-FT 2370
WTR YR 1975 TOTAL 1007.50 MEAN 2.76 MAX 34 MIN 0 AC-FT 2000

Peak discharge (base, 100 ft^3/s).--Mar. 8 (2130) 112 ft^3/s (9.71 ft).

11069500 SAN JACINTO RIVER NEAR SAN JACINTO, CALIF.--Continued

COMBINED DISCHARGE, IN CUBIC FEET PER SECOND, OF SAN JACINTO RIVER AND LAKE HEMET WATER CO.'S UPPER CANAL, NEAR SAN JACINTO, CALIF., WATER YEAR OCTOBER 1974 TO SEPTEMBER 1975

DAY	OCT	NOV	DEC	JAN	FEB	MAR	APR	MAY	JUN	JUL	AUG	SEP
1	3.6	3.2	1.4	.20	.03	.71	9.9	20	5.3	2.1	3.5	4.2
2	4.0	2.4	2.5	.20	.03	.69	7.6	19	5.0	2.1	3.5	4.2
3	4.2	2.4	1.4	.20	.21	.68	8.6	19	4.7	2.0	3.6	4.4
4	4.2	1.9	2.4	.20	.63	.65	9.4	20	4.5	2.0	3.6	4.7
5	4.2	1.8	2.2	.20	1.2	.62	7.0	18	4.1	1.9	3.7	4.6
6	4.1	1.7	.91	.20	1.1	4.8	11	16	3.7	1.9	3.8	4.3
7	4.2	1.7	.61	.19	.69	11	11	15	3.3	2.5	5.3	5.1
8	4.3	1.7	.48	.19	.50	35	11	15	3.2	2.6	6.1	6.7
9	4.1	1.7	.47	.18	1.2	37	18	14	2.8	3.1	4.3	5.4
10	4.0	1.7	.43	.14	3.6	19	17	14	2.5	2.9	4.7	5.1
11	3.9	1.7	.40	.14	3.1	18	15	13	1.6	2.7	5.0	4.7
12	3.8	1.6	.35	.14	1.4	17	17	13	1.5	2.6	5.5	4.6
13	3.8	1.6	.33	.14	.98	9.8	18	13	1.6	2.7	5.6	4.2
14	3.8	1.7	.31	.12	.81	9.0	19	13	1.1	3.5	5.6	3.8
15	3.8	1.7	.28	.13	.79	7.4	20	12	.90	3.6	5.3	4.2
16	3.9	1.8	.25	.13	.74	7.8	20	12	.80	4.0	4.9	4.4
17	3.7	1.8	.24	.14	.74	8.2	20	11	.79	3.9	4.5	4.8
18	3.1	2.2	.23	.13	.80	6.5	18	10	4.1	4.0	4.4	4.7
19	2.6	2.8	.20	.10	.74	9.2	20	10	5.6	3.9	4.2	4.6
20	2.8	3.0	.19	.12	.74	15	19	11	3.9	3.9	4.2	4.3
21	2.9	2.9	.18	.14	.68	16	23	14	3.2	3.8	4.0	4.3
22	3.1	3.0	.19	.08	.62	32	28	12	2.8	3.6	3.7	4.4
23	3.2	3.0	.19	.04	.62	27	25	10	2.6	3.6	3.1	4.4
24	3.2	2.9	.19	.03	.58	18	24	9.1	2.6	3.5	2.7	4.2
25	3.4	2.9	.18	.03	.54	21	24	8.4	2.5	3.4	2.9	4.0
26	3.4	2.3	.17	.03	.54	24	21	7.8	2.5	3.6	4.0	4.2
27	4.0	1.5	.16	.03	.59	17	18	7.2	2.3	3.5	4.2	4.0
28	4.0	1.5	.21	.03	.76	12	17	7.6	2.2	4.0	4.3	4.0
29	4.0	1.5	.22	.03	---	7.3	18	6.9	2.1	4.0	4.3	4.2
30	7.6	1.5	.20	.03	---	5.8	19	6.1	2.1	3.9	4.2	4.3
31	3.8	---	.18	.03	---	6.7	---	5.7	---	3.7	4.2	---
TOTAL	118.7	63.1	17.65	3.69	24.96	404.85	513.5	382.8	85.89	98.5	132.9	135.0
MEAN	3.83	2.10	.57	.12	.89	13.1	17.1	12.3	2.86	3.18	4.29	4.50
MAX	7.6	3.2	2.5	.20	3.6	37	28	20	5.6	4.0	6.1	6.7
MIN	2.6	1.5	.16	.03	.03	.62	7.0	5.7	.79	1.9	2.7	3.8
AC-FT	235	125	35	7.3	50	803	1020	759	170	195	264	268

CAL YR 1974 TOTAL 2327.92 MEAN 6.38 MAX 92 MIN .16 AC-FT 4620
WTR YR 1975 TOTAL 1981.54 MEAN 5.43 MAX 37 MIN .03 AC-FT 3930

Peak discharge (base, 100 ft^3/s).--Mar. 8 (2130) 115 ft^3/s.

11070050 BAUTISTA CREEK AT VALLE VISTA, CALIF.

LOCATION.--Lat 33°44'04", long 116°53'33", in SE¼NE¼SE¼ sec.17, T.5 S., R.1 E., Riverside County, on left levee of flood channel, 1.0 mi (1.6 km) south of Valle Vista.

DRAINAGE AREA.--47.2 mi^2 (122.2 km^2).

PERIOD OF RECORD.--October 1969 to current year.

GAGE.--Water-stage recorder. Altitude of gage is 1,835 ft (559 m), from topographic map.

AVERAGE DISCHARGE.--6 years, 0.47 ft^3/s (0.0133 m^3/s), 341 acre-ft/yr (420,000 m^3/yr).

EXTREMES.--Current year: Maximum discharge, 135 ft^3/s (3.82 m^3/s) Mar. 7 (gage height), 1.59 ft or 0.485 m), from rating curve extended as explained below; no flow for part of year.
Period of record: Maximum discharge, 750 ft^3/s (21.2 m^3/s) July 23, 1974 (gage height, 2.60 ft or 0.792 m, from floodmark), from rating curve extended above 80 ft^3/s (2.27 m^3/s) on basis of computation of flow in concrete-lined channel at gage heights 1.50 ft (0.457 m), 2.00 ft (0.610 m), and 3.00 ft (0.914 m); no flow for many days in each year.

REMARKS.--Records poor. No regulation above station. Diversion above station for irrigation of about 15 acres (61,000 m^2). Some infiltration by detention dam, 1.5 mi (2.4 km) upstream.

DISCHARGE, IN CUBIC FEET PER SECOND, WATER YEAR OCTOBER 1974 TO SEPTEMBER 1975
MEAN VALUES

DAY	OCT	NOV	DEC	JAN	FEB	MAR	APR	MAY	JUN	JUL	AUG	SEP
1	0	.92	0	0	0	0	.15	.32	.22	.02	0	0
2	0	.73	0	0	0	0	.03	1.1	.09	.01	0	0
3	0	.37	16	0	11	0	.24	3.2	0	0	0	.10
4	0	0	6.7	0	4.3	0	.24	4.7	0	0	.03	.01
5	0	0	2.2	0	2.0	1.5	.25	3.2	0	.01	0	0
6	0	0	1.8	0	0	9.7	.62	2.2	0	0	0	0
7	0	0	1.5	0	0	17	.14	0	0	0	0	0
8	0	0	1.2	0	0	4.2	.62	.04	0	0	0	.01
9	0	0	1.0	0	1.2	4.8	.22	.45	0	0	0	0
10	0	0	.50	0	.30	7.0	.14	2.6	0	0	0	0
11	0	0	0	0	.02	3.0	.14	1.1	0	0	0	0
12	0	0	0	0	0	0	.14	.14	0	0	0	0
13	0	0	0	0	0	.30	.22	.32	0	0	0	0
14	0	0	0	0	0	0	.22	.09	0	0	0	0
15	0	0	0	0	.52	.50	.62	0	0	0	0	0
16	0	0	0	0	0	0	.32	0	0	0	0	0
17	0	0	0	0	0	0	.82	0	0	0	0	0
18	0	0	0	0	0	0	.45	0	.14	0	0	0
19	0	0	0	0	0	0	.45	0	.32	0	0	0
20	0	0	0	0	0	0	.45	.05	.05	0	.10	0
21	0	0	0	.27	0	0	1.1	2.6	0	.01	0	0
22	0	0	0	.17	0	0	2.6	2.6	0	0	0	0
23	0	0	0	0	0	.30	3.2	.62	0	0	0	0
24	0	0	0	0	0	0	3.2	.45	.04	0	0	0
25	0	0	0	0	0	0	3.2	6.7	0	0	0	0
26	.04	0	0	0	0	1.0	3.9	4.7	0	0	0	0
27	0	0	0	0	0	0	4.7	.94	0	.02	0	0
28	5.4	0	2.7	0	0	0	1.1	0	0	0	0	0
29	8.1	0	2.4	.02	---	0	.62	.04	.07	.03	0	0
30	8.5	0	0	.13	---	.06	.22	.07	.04	.30	0	0
31	1.1	---	0	.07	---	.01	---	0	---	0	0	---
TOTAL	23.14	2.02	36.00	.66	19.34	49.37	30.32	38.23	.97	.40	.13	.12
MEAN	.75	.067	1.16	.021	.69	1.59	1.01	1.23	.032	.013	.004	.004
MAX	8.5	.92	16	.27	11	17	4.7	6.7	.32	.30	.10	.10
MIN	0	0	0	0	0	0	.03	0	0	0	0	0
AC-FT	46	4.0	71	1.3	38	98	60	76	1.9	.8	.3	.2

CAL YR 1974 TOTAL 263.66 MEAN .72 MAX 87 MIN 0 AC-FT 523
WTR YR 1975 TOTAL 200.70 MEAN .55 MAX 17 MIN 0 AC-FT 398

Peak discharge (base, 100 ft^3/s, revised).--Dec. 3 (2145) 127 ft^3/s (1.57 ft); Mar. 7 (2015) 135 ft^3/s (1.59 ft).

11070270 PERRIS VALLEY STORM DRAIN AT NUEVO ROAD, NEAR PERRIS, CALIF.

LOCATION.--Lat 33°48'04", long 117°12'19", in SE¼SW¼SW¼ sec.21, T.4 S., R.3 W., Riverside County, 1.9 mi (3.0 km) northeast of Perris, and 2.0 mi (3.2 km) upstream from San Jacinto River.

DRAINAGE AREA.--93.3 mi^2 (241.6 km^2).

PERIOD OF RECORD.--October 1969 to September 1975 (discontinued).

GAGE.--Water-stage recorder and rain-gage attachment. Altitude of gage is 1,413 ft (430.6 m), from topographic map.

AVERAGE DISCHARGE.--6 years, 1.11 ft^3/s (0.0314 m^3/s), 804 acre-ft/yr (991,000 m^3/yr).

EXTREMES.--Current year: Maximum discharge, 293 ft^3/s (8.30 m^3/s) Mar. 8 (gage height, 1.55 ft or 0.472 m), from rating curve extended as explained below; no flow most of year.

Period of record: Maximum discharge, 914 ft^3/s (25.9 m^3/s) Feb. 13, 1973 (gage height, 2.79 ft or 0.850 m), from rating curve extended above 400 ft^3/s (11.3 m^3/s) on basis of slope-area measurement at gage height 6.7 ft (2.042 m); no flow most of each year.

Flood of Feb. 25, 1969, 4,840 ft^3/s (137 m^3/s), gage height, 6.7 ft (2.042 m), from floodmarks, result of slope-area measurement by Riverside County Flood Control District.

REMARKS.--Records good. Some regulation by percolation basins above station. Extensive pumping for irrigation above station.

DISCHARGE, IN CUBIC FEET PER SECOND, WATER YEAR OCTOBER 1974 TO SEPTEMBER 1975
MEAN VALUES

DAY	OCT	NOV	DEC	JAN	FEB	MAR	APR	MAY	JUN	JUL	AUG	SEP
1	0		0		0	0	0		0			
2	0		0		0	0	0		0			
3	0		0		28	0	0		0			
4	0		44		2.4	0	0		0			
5	0		.93		.06	0	0		0			
6	0		0		0	10	.26		0			
7	0		0		0	.18	3.6		0			
8	0		0		0	81	2.5		0			
9	0		0		1.5	9.2	28		.10			
10	0		0		.38	24	3.2		0			
11	0		0		.22	9.5	2.1		0			
12	0		0		0	1.0	0		0			
13	0		0		0	0	0		0			
14	0		0		0	1.3	0		0			
15	0		0		0	0	0		0			
16	0		0		0	0	0		0			
17	0		0		0	.20	0		.01			
18	0		0		0	0	0		.04			
19	0		0		0	0	0		.09			
20	0		0		0	0	0		.09			
21	0		0		0	0	0		.09			
22	0		0		0	0	0		.04			
23	0		0		0	0	0		0			
24	0		0		0	0	0		0			
25	0		0		0	0	0		0			
26	0		0		0	0	0		0			
27	0		0		0	0	0		0			
28	0		0		0	0	0		0			
29	.12		2.2		---	0	0		0			
30	.12		0		---	0	0		0			
31	0	---	0		---	0	---		---			---
TOTAL	.24	0	47.13	0	32.56	136.36	39.66	0	.46	0	0	0
MEAN	.008	0	1.52	0	1.16	4.40	1.32	0	.015	0	0	0
MAX	.12	0	44	0	28	81	28	0	.10	0	0	0
MIN	0	0	0	0	0	0	0	0	0	0	0	0
AC-FT	.5	0	93	0	65	271	79	0	.9	0	0	0
(a)	.63	0	2.08	.07	1.63	3.18	1.21	0	0	0	0	0

CAL YR 1974 TOTAL 677.28 MEAN 1.86 MAX 189 MIN 0 AC-FT 1340
WTR YR 1975 TOTAL 256.43 MEAN .70 MAX 81 MIN 0 AC-FT 509

Peak discharge (base, 200 ft^3/s).--Dec. 4 (0925) 226 ft^3/s (1.36 ft); Mar. 8 (1615) 293 ft^3/s (1.55 ft).

a Precipitation, in inches.

11070375 SAN JACINTO RIVER AT RAILROAD CANYON WEIR, NEAR ELSINORE, CALIF.

LOCATION.--Lat 33°44'10", long 117°15'08", in SW¼SE¼NW¼ sec.13, T.5 S., R.4 W., Riverside County, on right bank 4.3 mi (6.9 km) northeast of Railroad Canyon Dam, and 5.8 mi (9.3 km) northeast of Elsinore.

DRAINAGE AREA.--562 mi^2 (1,456 km^2).

PERIOD OF RECORD.--October 1951 to current year. Monthly discharge only prior to October 1971. Daily discharge available in district files.

GAGE.--Water-stage recorder. Altitude of gage is 1,400 ft (427 m), from topographic map. Prior to Sept. 28, 1960, at site 0.8 mi (1.3 km) upstream at different datum.

AVERAGE DISCHARGE (River only).--24 years, 5.70 ft^3/s (0.161 m^3/s), 4,130 acre-ft/yr (5.09 hm^3/yr).

EXTREMES.--Current year: Maximum discharge (including Colorado River water), 450 ft^3/s (12.7 m^3/s) Mar. 8 (gage height, 2.70 ft or 0.829 m); no flow most of year.
Period of record: Maximum discharge, 5,330 ft^3/s (151 m^3/s) Feb. 25, 1969, results of runoff study by Riverside County Flood Control and Water Conservation District; no flow for long periods in each year.

REMARKS.--Flow partially regulated by Lake Hemet (see sta 11069000). Diversions for irrigation and domestic use above station. At times imported Colorado River water is discharged into channel above station by Temescal Water Co. or Elsinore Valley Municipal Water District.

COOPERATION.--Records published as furnished by Riverside County Flood Control and Water Conservation District.

DISCHARGE, IN CUBIC FEET PER SECOND, WATER YEAR OCTOBER 1974 TO SEPTEMBER 1975
MEAN VALUES

DAY	OCT	NOV	DEC	JAN	FEB	MAR	APR	MAY	JUN	JUL	AUG	SEP
1			0		0	0	0					
2			0		0	0	0					
3			0		22	0	0					
4			32		20	0	0					
5			6.2		1.8	0	0					
6			.71		.50	39	0					
7			.27		0	9.5	.65					
8			0		0	119	7.2					
9			0		0	44	46					
10			0		0	26	2.7					
11			0		0	37	5.2					
12			0		0	2.5	.72					
13			0		0	0	.04					
14			0		0	.09	0					
15			0		0	.27	0					
16			0		0	0	0					
17			0		0	0	0					
18			0		0	0	0					
19			0		0	0	0					
20			0		0	0	0					
21			0		0	0	0					
22			0		0	0	0					
23			0		0	0	0					
24			0		0	0	0					
25			0		0	0	0					
26			0		0	0	0					
27			0		0	0	0					
28			0		0	0	0					
29			0		---	0	0					
30			0		---	0	0					
31		---	0		---	0	---		---			---
TOTAL	0	0	39.18	0	44.30	277.36	62.51	0	0	0	0	0
MEAN	0	0	1.26	0	1.58	8.95	2.08	0	0	0	0	0
MAX	0	0	32	0	22	119	46	0	0	0	0	0
MIN	0	0	0	0	0	0	0	0	0	0	0	0
AC-FT	0	0	78	0	88	550	124	0	0	0	0	0
(a)	0	0	0	0	883	1,600	0	0	0	0	0	0

CAL YR 1974 TOTAL 971.33 MEAN 2.66 MAX 379 MIN 0 AC-FT 1930
WTR YR 1975 TOTAL 423.35 MEAN 1.16 MAX 119 MIN 0 AC-FT 840

a Imported Colorado River water, in acre-feet.

11070475 SALT CREEK AT RAILROAD CANYON RESERVOIR, NEAR ELSINORE, CALIF.

LOCATION. -Lat 33°40'42", long 117°14'03", in SW¼SE¼NW¼ sec.6, T.6 S., R.3 W., Riverside County, on left bank at Railroad Canyon Road, 5.1 mi (8.2 km) northeast of Elsinore.

DRAINAGE AREA.--122 mi^2 (316 km^2), largely noncontributing except during extreme floods.

PERIOD OF RECORD.--October 1969 to current year.

GAGE.--Water-stage recorder. Datum of gage is 1,382.0 ft (421.234 m) above mean sea level (levels by Riverside County Flood Control and Water Conservation District).

AVERAGE DISCHARGE.--6 years, 0.34 ft^3/s (0.0096 m^3/s), 246 acre-ft/yr (303,000 m^3/yr).

EXTREMES.--Current year: Maximum discharge, 104 ft^3/s (2.95 m^3/s) Mar. 6 (gage height, 2.50 ft or 0.762 m); no flow most of year.

Period of record: Maximum discharge, 169 ft^3/s (4.79 m^3/s) Jan. 8, 1974 (gage height not furnished); no flow most of each year.

Flood of Feb. 25, 1969, 2,010 ft^3/s (56.9 m^3/s), at site 1 mi (1.6 km) upstream (from records of Riverside County Flood Control and Water Conservation District).

REMARKS.--No regulation or diversion above station.

COOPERATION.--Records published as furnished by Riverside County Flood Control and Water Conservation District.

DISCHARGE, IN CUBIC FEET PER SECOND, WATER YEAR OCTOBER 1974 TO SEPTEMBER 1975
MEAN VALUES

DAY	OCT	NOV	DEC	JAN	FEB	MAR	APR	MAY	JUN	JUL	AUG	SEP
1			0		0	0	0					
2			0		0	0	0					
3			0		7.9	0	0					
4			6.9		7.9	0	0					
5			.72		1.1	0	0					
6			0		0	26	0					
7			0		0	10	0					
8			0		0	5.7	.46					
9			0		0	16	19					
10			0		0	9.4	7.6					
11			0		0	12	.72					
12			0		0	2.0	0					
13			0		0	0	0					
14			0		0	0	0					
15			0		0	0	0					
16			0		0	0	0					
17			0		0	0	0					
18			0		0	0	0					
19			0		0	0	0					
20			0		0	0	0					
21			0		0	0	0					
22			0		0	0	0					
23			0		0	0	0					
24			0		0	0	0					
25			0		0	0	0					
26			0		0	0	0					
27			0		0	0	0					
28			0		0	0	0					
29			2.1		---	0	0					
30			.02		---	0	0					
31		---	0		---	0	---		---			---
TOTAL	0	0	9.74	0	16.9	81.1	27.78	0	0	0	0	0
MEAN	0	0	.31	0	.60	2.62	.93	0	0	0	0	0
MAX	0	0	6.9	0	7.9	26	19	0	0	0	0	0
MIN	0	0	0	0	0	0	0	0	0	0	0	0
AC-FT	0	0	19	0	34	161	55	0	0	0	0	0

CAL YR 1974 TOTAL 238.08 MEAN .65 MAX 115 MIN 0 AC-FT 472
WTR YR 1975 TOTAL 135.52 MEAN .37 MAX 26 MIN 0 AC-FT 269

11070500 SAN JACINTO RIVER NEAR ELSINORE, CALIF.

LOCATION.--Lat 33°39'51", long 117°17'35", in SE¼SE¼NE¼ sec.9, T.6 S., R.4 W., Riverside County, on right bank 2 mi (3 km) east of Elsinore, and 2.1 mi (3.4 km) downstream from Railroad Canyon Dam.

DRAINAGE AREA.--723 mi^2 (1,873 km^2).

PERIOD OF RECORD.--January 1916 to current year. Monthly figures 1927-50, adjusted for diversion, published in WSP 1315-B.

GAGE.--Water-stage recorder. Altitude of gage is 1,270 ft (387 m), from topographic map. Prior to Feb. 13, 1916, nonrecording gage at site 0.7 mi (1.1 km) downstream at different datum. Feb. 13, 1916, to Oct. 27, 1921, nonrecording gage at present site at different datum.

EXTREMES.--Current year: Maximum discharge, 18 ft^3/s (0.51 m^3/s) Dec. 4 (gage height, 2.83 ft or 0.863 m); maximum gage height, 2.88 ft (0.877 m) Feb. 4 (backwater from channel growth); no flow for several months.
Period of record: Maximum discharge, 16,000 ft^3/s (453 m^3/s) Feb. 17, 1927 (gage height, 11.8 ft or 3.60 m), from rating curve extended above 2,000 ft^3/s (56.6 m^3/s) on basis of slope-area measurement of maximum flow; no flow for several months in most years.

REMARKS.--Records fair. Flow partly regulated by Lake Hemet (see sta 11069000) and regulated since 1928 by Railroad Canyon Reservoir, capacity, 12,000 acre-ft (14.8 hm^3), 2.1 mi (3.4 km) above station. Diversion for irrigation and domestic use above Railroad Canyon Reservoir. Temescal Water Co. diverted 826 acre-ft (1.02 hm^3/yr) during current year from Railroad Canyon Reservoir for irrigation below station in vicinity of Corona. See schematic diagram of Santa Ana River basin.

DISCHARGE, IN CUBIC FEET PER SECOND, WATER YEAR OCTOBER 1974 TO SEPTEMBER 1975
MEAN VALUES

DAY	OCT	NOV	DEC	JAN	FEB	MAR	APR	MAY	JUN	JUL	AUG	SEP
1		0	.11	.60	.19	5.0	2.5	.96				
2		0	.11	1.0	.17	5.1	2.4	1.6				
3		0	.09	3.3	3.9	5.1	2.3	1.6				
4		0	5.1	3.3	1.4	4.9	2.3	1.5				
5		0	1.1	3.3	.56	3.6	2.2	1.5				
6		0	.48	1.9	.41	2.6	2.2	1.5				
7		0	.39	.32	.36	1.2	2.1	1.5				
8		0	.32	.32	.32	1.1	2.3	1.5				
9		0	.32	.30	.87	1.6	5.7	1.3				
10		0	.32	.26	.61	1.2	6.1	1.4				
11		.09	.36	.25	.44	3.4	8.8	1.4				
12		.11	.36	.22	.42	1.0	8.6	1.6				
13		.11	.36	.23	.38	.73	8.6	1.5				
14		.11	.36	.22	.43	.73	8.5	1.1				
15		.11	.36	.23	.41	.63	8.5	1.1				
16		.13	.39	.23	.38	.60	8.5	1.2				
17		.11	.39	.24	.40	.60	8.7	1.2				
18		.13	.39	.26	.60	.53	5.7	.46				
19		.15	.39	.26	.64	.51	1.9	0				
20		.13	.39	.23	.67	.47	1.9	0				
21		.11	.39	.26	.66	.41	.88	0				
22		.08	.43	.24	.61	.42	.06	0				
23		.07	.39	.26	.67	.41	.06	0				
24		.07	.39	.23	.70	.37	.06	0				
25		.07	.43	.26	2.7	.34	.06	0				
26		.08	.47	.26	4.5	.30	.06	0				
27		.08	.47	.25	3.7	.23	.05	0				
28		.09	.76	.21	5.1	.21	.05	0				
29		.10	2.1	.17	---	.19	.05	0				
30		.10	.51	.19	---	.17	.05	0				
31		---	.60	.23	---	1.6	---	0	---			---
TOTAL	0	2.03	19.03	19.53	32.20	45.25	101.18	23.92	0	0	0	0
MEAN	0	.068	.61	.63	1.15	1.46	3.37	.77	0	0	0	0
MAX	0	.15	5.1	3.3	5.1	5.1	8.8	1.6	0	0	0	0
MIN	0	0	.09	.17	.17	.17	.05	0	0	0	0	0
AC-FT	0	4.0	38	39	64	90	201	47	0	0	0	0

CAL YR 1974 TOTAL 329.22 MEAN .90 MAX 9.0 MIN 0 AC-FT 653
WTR YR 1975 TOTAL 243.14 MEAN .67 MAX 8.8 MIN 0 AC-FT 482

11072000 TEMESCAL CREEK NEAR CORONA, CALIF.

LOCATION.--Lat 33°50'29", long 117°30'37", in El Sobrante de San Jacinto Grant, Riverside County, on left bank 0.2 mi (0.3 km) downstream from unnamed tributary, and 3.8 mi (6.1 km) southeast of Corona.

DRAINAGE AREA.--164 mi^2 (425 km^2), excludes 768 mi^2 (1,989 km^2) above Lake Elsinore.

PERIOD OF RECORD.--October 1927 to current year. Monthly discharge only for the period October 1928 to January 1929, published in WSP 1315-B.

GAGE.--Water-stage recorder. Concrete control since June 12, 1970. Altitude of gage is 730 ft (223 m), from topographic map. Prior to Feb. 11, 1943, at datum 6.00 ft (1.829 m) higher.

AVERAGE DISCHARGE.--48 years, 3.33 ft^3/s (0.0943 m^3/s), 2,410 acre-ft/yr (2.97 hm^3/yr).

EXTREMES.--Current year: Maximum discharge, 167 ft^3/s (4.73 m^3/s) Dec. 4 (gage height, 9.89 ft or 3.015 m); no flow many days.
Period of record: Maximum discharge, 14,900 ft^3/s (422 m^3/s) Mar. 2, 1938, on basis of slope-area measurement of maximum flow; no flow at times in most years.

REMARKS.--Records fair. Flow regulated by several storage reservoirs. Many diversions above station for irrigation. See schematic diagram of Santa Ana River basin.

DISCHARGE, IN CUBIC FEET PER SECOND, WATER YEAR OCTOBER 1974 TO SEPTEMBER 1975
MEAN VALUES

DAY	OCT	NOV	DEC	JAN	FEB	MAR	APR	MAY	JUN	JUL	AUG	SEP
1	0		0	0	.17	0	.12	.37	0	0		
2	0		0	0	.17	0	.12	.34	0	0		
3	0		0	0	1.7	1.4	.10	.32	0	0		
4	0		18	0	.15	1.6	.13	.26	0	0		
5	0		0	0	0	.36	.14	.20	0	.05		
6	0		0	0	0	1.5	.14	.11	0	.03		
7	0		0	0	0	.42	.17	.13	0	.10		
8	0		0	0	0	11	.44	.22	0	0		
9	0		0	0	.01	.82	1.6	.19	0	0		
10	0		0	0	.04	3.1	.23	.22	0	0		
11	0		0	0	.08	.96	.20	.25	0	0		
12	0		0	0	.05	.23	.20	.33	.04	0		
13	0		0	0	.03	.07	.20	.23	.02	0		
14	0		0	0	.05	.08	3.8	.33	.01	0		
15	0		0	.03	.02	.03	.55	.32	.01	0		
16	0		0	.07	.03	.03	.49	.48	.02	0		
17	0		0	.17	.06	.01	.52	.41	.05	0		
18	.09		0	.01	.12	.02	.35	.25	.01	0		
19	0		0	0	.14	.04	.38	.15	.01	0		
20	0		0	0	.11	.05	.39	.11	0	0		
21	0		0	0	0	.04	.38	.11	0	0		
22	0		0	0	0	.05	.33	.08	0	0		
23	0		0	0	.01	.06	.24	.08	0	0		
24	0		0	.03	.01	.07	.26	.10	0	0		
25	0		0	.15	0	.08	.26	.11	0	0		
26	0		0	.17	.01	.12	.31	.08	.01	0		
27	0		0	.14	.03	.12	.25	.04	.01	0		
28	0		.09	.20	.07	.12	.26	.04	.07	0		
29	0		.19	.24	---	.13	.24	.03	.07	0		
30	0		0	.20	---	.14	.26	0	0	0		
31	.02	---	0	.24	---	.14	---	0	---	0		---
TOTAL	.11	0	18.28	1.65	3.06	22.79	13.06	5.89	.33	.18	0	0
MEAN	.004	0	.59	.053	.11	.74	.44	.19	.011	.006	0	0
MAX	.09	0	18	.24	1.7	11	3.8	.48	.07	.10	0	0
MIN	0	0	0	0	0	0	.10	0	0	0	0	0
AC-FT	.2	0	36	3.3	6.1	45	26	12	.7	.4	0	0

CAL YR 1974 TOTAL 267.89 MEAN .73 MAX 46 MIN 0 AC-FT 531
WTR YR 1975 TOTAL 65.35 MEAN .18 MAX 18 MIN 0 AC-FT 130

11073200 SAN ANTONIO CREEK BELOW SAN ANTONIO DAM, CALIF.

LOCATION.--Lat 34°09'26", long 117°40'50", in NE¼NE¼SE¼ sec.23, T.1 N., R.8 W., Los Angeles-San Bernardino County line, on left wall of outlet channel at toe of San Antonio Dam, and 4.7 mi (7.6 km) northeast of Claremont.

DRAINAGE AREA.--26.9 mi^2 (69.7 km^2).

PERIOD OF RECORD.--October 1962 to current year.

GAGE.--Water-stage recorder. Datum of gage is 2,093.94 ft (638.233 m) above mean sea level (Corps of Engineers bench mark).

EXTREMES.--Current year: Maximum discharge, 13 ft^3/s (0.368 m^3/s) Mar. 26 (gage height, 1.29 ft or 0.393 m); no flow most of year.
Period of record: Maximum discharge, 8,420 ft^3/s (238 m^3/s) Jan. 25, 1969 (gage height, 11.22 ft or 3.420 m), from rating curve extended above 400 ft^3/s (11.3 m^3/s) on basis of gate openings at dam; no flow most of each year.

REMARKS.--Records fair. Flow regulated by San Antonio flood-control reservoir, capacity, 7,620 acre-ft (9.40 hm^3). Water diverted out of basin for power, domestic use, and irrigation. See schematic diagram of Santa Ana River basin.

DISCHARGE, IN CUBIC FEET PER SECOND, WATER YEAR OCTOBER 1974 TO SEPTEMBER 1975
MEAN VALUES

DAY	OCT	NOV	DEC	JAN	FEB	MAR	APR	MAY	JUN	JUL	AUG	SEP
1	0		0		0	0	0					
2	0		0		0	0	0					
3	0		0		.03	0	0					
4	0		.15		.01	0	0					
5	0		.02		0	0	0					
6	0		0		0	.95	0					
7	0		0		0	.52	0					
8	0		0		0	.52	0					
9	0		0		.02	.52	.32					
10	0		0		.01	.52	.04					
11	0		0		0	.52	0					
12	0		0		0	.52	0					
13	0		0		0	.52	0					
14	0		0		0	.52	0					
15	0		0		0	.52	0					
16	0		0		0	.52	0					
17	0		0		0	.52	0					
18	0		0		0	.52	0					
19	0		0		0	.52	0					
20	0		0		0	.52	0					
21	0		0		0	.52	0					
22	0		0		0	.52	0					
23	0		0		0	.52	0					
24	0		0		0	.52	0					
25	0		0		0	.52	0					
26	0		0		0	4.9	0					
27	0		0		0	.30	0					
28	.02		0		0	.12	0					
29	0		.08		---	0	0					
30	0		0		---	0	0					
31	0	---	0		---	0	---		---			---
TOTAL	.02	0	.25	0	.07	16.15	.36	0	0	0	0	0
MEAN	.0006	0	.008	0	.003	.52	.012	0	0	0	0	0
MAX	.02	0	.15	0	.03	4.9	.32	0	0	0	0	0
MIN	0	0	0	0	0	0	0	0	0	0	0	0
AC-FT	.04	0	.5	0	.1	32	.7	0	0	0	0	0

CAL YR 1974 TOTAL 90.86 MEAN .25 MAX 36 MIN 0 AC-FT 180
WTR YR 1975 TOTAL 16.85 MEAN .046 MAX 4.9 MIN 0 AC-FT 33

11073210 RIALTO PIPELINE BELOW SAN ANTONIO DAM, NEAR CLAREMONT, CALIF.

LOCATION.--Lat 34°07'43", long 117°41'29", in NW¼NE¼SW¼ sec.35, T.1 N., R.8 W., Los Angeles County, 0.5 mi (0.8 km) north of Baseline Road, and 2.1 mi (3.4 km) downstream from San Antonio Dam.

PERIOD OF RECORD.--Chemical analyses: March to September 1974.

REMARKS.--Discharge values from Chino Creek at Schaefer Avenue, near Chino (sta 11073360).

WATER QUALITY DATA, WATER YEAR OCTOBER 1974 TO SEPTEMBER 1975

DATE	TIME	INSTANTANEOUS DISCHARGE (CFS)	DISSOLVED SILICA (SIO2) (MG/L)	DISSOLVED IRON (FE) (UG/L)	DISSOLVED CALCIUM (CA) (MG/L)	DISSOLVED MAGNESIUM (MG) (MG/L)	DISSOLVED SODIUM (NA) (MG/L)	DISSOLVED POTASSIUM (K) (MG/L)	BICARBONATE (HCO3) (MG/L)
OCT.									
04...	0910	83	8.2	60	21	11	34	2.5	92
17...	0930	86	8.8	10	21	9.6	33	3.0	92
31...	1000	40	8.7	10	21	9.1	34	2.8	93
NOV.									
12...	1030	70	8.1	20	22	8.8	34	3.3	92
25...	1100	65	8.0	20	22	10	35	2.5	94
DEC.									
13...	1100	88	8.5	10	21	9.4	36	2.4	94
JAN.									
22...	1230	25	9.9	50	22	9.4	38	2.5	95
FEB.									
24...	1000	.25	9.2	10	22	10	35	2.1	95
JUNE									
10...	0910	50	6.9	30	22	10	40	3.3	91
JULY									
31...	1030	73	7.2	10	24	12	43	2.9	107
SEP.									
09...	1200	44	8.3	20	24	12	42	2.8	109

DATE	CARBONATE (CO3) (MG/L)	ALKALINITY AS CACO3 (MG/L)	DISSOLVED SULFATE (SO4) (MG/L)	DISSOLVED CHLORIDE (CL) (MG/L)	DISSOLVED FLUORIDE (F) (MG/L)	DISSOLVED NITRITE PLUS NITRATE (N) (MG/L)	DISSOLVED SOLIDS (SUM OF CONSTITUENTS) (MG/L)	DISSOLVED SOLIDS (TONS PER AC-FT)	DISSOLVED SOLIDS (TONS PER DAY)
OCT.									
04...	0	75	35	42	.1	.28	201	.27	45.0
17...	0	74	33	43	.1	.05	197	.27	45.7
31...	0	76	32	43	.1	.08	197	.27	21.3
NOV.									
12...	0	75	32	43	.1	.12	197	.27	37.2
25...	0	77	31	43	.1	.08	199	.27	34.9
DEC.									
13...	0	77	32	46	.1	.11	202	.27	48.0
JAN.									
22...	0	78	33	47	.1	.35	211	.29	14.2
FEB.									
24...	0	78	36	47	.1	.32	210	.29	.14
JUNE									
10...	0	75	40	49	.1	.05	217	.30	29.3
JULY									
31...	0	88	44	57	.2	.08	244	.33	48.1
SEP.									
09...	0	89	36	54	.2	.08	234	.32	27.8

DATE	HARDNESS (CA,MG) (MG/L)	NONCARBONATE HARDNESS (MG/L)	PERCENT SODIUM	SODIUM ADSORPTION RATIO	SPECIFIC CONDUCTANCE (MICROMHOS)	PH (UNITS)	TEMPERATURE (DEG C)	DISSOLVED BORON (B) (UG/L)
OCT.								
04...	98	22	42	1.5	356	7.9	20.0	120
17...	92	17	43	1.5	356	8.1	19.7	250
31...	90	14	44	1.6	355	8.0	17.5	90
NOV.								
12...	91	16	44	1.6	361	8.0	15.4	180
25...	96	19	43	1.6	364	7.1	14.5	190
DEC.								
13...	91	14	45	1.6	358	8.0	11.0	150
JAN.								
22...	94	16	46	1.7	379	8.0	8.2	170
FEB.								
24...	96	18	44	1.6	380	8.1	9.0	170
JUNE								
10...	96	21	46	1.8	395	8.7	17.5	190
JULY								
31...	110	22	45	1.8	430	8.3	21.0	220
SEP.								
09...	110	20	45	1.7	430	7.9	19.8	180

11073360 CHINO CREEK AT SCHAEFER AVENUE, NEAR CHINO, CALIF.

LOCATION.--Lat 34°00'14", long 117°43'34", in Santa Ana del Chino Grant, San Bernardino County, on right bank 300 ft (91 m) downstream from Schaefer Avenue, 0.8 mi (1.3 km) downstream from San Antonio Creek, and 1.5 mi (2.4 km) southwest of Chino.

DRAINAGE AREA.--48.9 mi^2 (126.7 km^2).

PERIOD OF RECORD.--October 1969 to current year.

GAGE.--Water-stage recorder. Altitude of gage is 685 ft (209 m), from topographic map.

EXTREMES.--Current year: Maximum discharge, 2,920 ft^3/s (82.7 m^3/s) Dec. 4 (gage height, 6.61 ft or 2.015 m), from rating curve extended as explained below; minimum daily, 0.05 ft^3/s (0.001 m^3/s) Mar. 17, 23, 26.
Period of record: Maximum discharge, 2,920 ft^3/s (82.7 m^3/s) Dec. 4, 1974 (gage height, 6.61 ft or 2.015 m, from floodmarks), from rating curve extended above 620 ft^3/s (17.6 m^3/s) on basis of computation of flow in concrete-lined channel at 1,600 ft^3/s (45.3 m^3/s) and a contracted-opening measurement at 9.23 ft (2.813 m); minimum daily, 0.05 ft^3/s (0.001 m^3/s) Sept. 23, Oct. 4, 1973, Mar. 17, 23, 26, 1975.
Flood of Jan. 25, 1969, 9,200 ft^3/s (261 m^3/s), gage height, 9.23 ft (2.813 m), present datum, by contracted-opening measurement at site 6.1 mi (9.8 km) downstream.

REMARKS.--Records fair. Flow partly regulated by San Antonio flood-control reservoir, capacity, 7,620 acre-ft (9.40 hm^3). Natural streamflow affected by extensive ground-water withdrawals, diversions for power, domestic use, irrigation, and return flow from irrigated areas. California Water Project reported releases of 27,300 acre-ft (33.7 hm^3) between Dec. 3 and Sept. 30 to basin at San Antonio Creek at Rialto pipeline below San Antonio Dam (see sta 11073210) at a point 10 mi (16 km) upstream. See schematic diagram of Santa Ana River basin.

DISCHARGE, IN CUBIC FEET PER SECOND, WATER YEAR OCTOBER 1974 TO SEPTEMBER 1975
MEAN VALUES

DAY	OCT	NOV	DEC	JAN	FEB	MAR	APR	MAY	JUN	JUL	AUG	SEP
1	83	.40	76	.26	.12	.21	5.4	.32	.26	76	73	41
2	83	.26	103	.50	.16	.21	1.1	.26	.62	80	76	41
3	83	1.1	57	48	231	1.1	.26	.26	.40	86	76	41
4	83	1.3	452	96	12	5.3	4.8	.26	.26	80	76	41
5	83	.62	.62	93	1.0	116	26	.21	.21	83	76	39
6	83	.76	.26	80	.40	129	27	.26	.21	83	76	36
7	83	1.6	.50	63	.32	21	1.3	.32	.21	80	76	36
8	16	1.1	.76	30	.26	157	58	.32	.16	80	73	41
9	.50	.62	.32	.40	90	.62	24	.32	27	80	76	44
10	.62	.50	.92	.62	19	36	1.1	.40	50	80	76	31
11	32	44	51	.21	.21	.40	.62	.21	50	80	70	41
12	80	70	89	.21	.21	.16	.40	.40	52	83	52	41
13	83	73	93	20	.62	7.4	.40	.21	55	80	55	44
14	83	80	96	34	.92	21	.62	.26	55	114	63	44
15	66	73	100	34	.21	.09	2.7	.40	50	136	66	44
16	70	73	105	28	.12	.26	.76	.40	79	131	70	44
17	86	73	70	30	3.9	.05	14	.32	96	136	73	44
18	83	76	47	30	.40	.07	2.2	.32	96	140	73	47
19	83	80	50	30	.32	1.5	.32	.62	96	150	76	44
20	86	76	47	30	.26	.07	.21	1.9	96	150	76	47
21	131	67	50	28	.26	.09	.76	.76	96	150	76	47
22	155	73	50	32	.26	73	.76	.62	96	52	80	50
23	150	83	44	32	.26	.05	.76	.76	96	27	83	52
24	155	70	50	17	.26	.07	1.1	.40	96	140	80	52
25	155	73	50	.32	.40	28	11	.40	96	127	60	52
26	150	73	52	.32	.32	.05	.21	.40	77	118	44	47
27	150	73	42	2.2	.26	.21	.16	1.1	80	114	31	19
28	287	73	91	2.4	.26	.12	.21	.62	80	114	3.5	6.7
29	131	76	18	.21	---	.09	.21	.50	80	114	42	44
30	131	76	.26	4.2	---	.21	.40	.32	80	76	41	44
31	67	---	.26	.40	---	.32	---	.76	---	73	44	---
TOTAL	3012.12	1463.26	1886.90	767.25	363.71	599.65	186.76	14.61	1681.33	3113	2012.5	1244.7
MEAN	97.2	48.8	60.9	24.8	13.0	19.3	6.23	.47	56.0	100	64.9	41.5
MAX	287	83	452	96	231	157	58	1.9	96	150	83	52
MIN	.50	.26	.26	.21	.12	.05	.16	.21	.16	27	3.5	6.7
AC-FT	5970	2900	3740	1520	721	1190	370	29	3330	6170	3990	2470

CAL YR 1974 TOTAL 36228.27 MEAN 99.3 MAX 452 MIN .09 AC-FT 71860
WTR YR 1975 TOTAL 16345.79 MEAN 44.8 MAX 452 MIN .05 AC-FT 32420

Peak discharge (base, 600 ft^3/s)

Date	Time	G.H.	Discharge	Date	Time	G.H.	Discharge
10-28	1230	5.76	1,390	2-3	0630	5.76	1,390
12-4	0500	6.61	2,920	3-5	2330	6.06	1,890
12-28	0545	5.14	600	3-8	0530	5.71	1,320

11073360 CHINO CREEK AT SCHAEFER AVENUE, NEAR CHINO, CALIF.--Continued

PERIOD OF RECORD.--Chemical analyses: March 1974 to current year.

WATER QUALITY DATA, WATER YEAR OCTOBER 1974 TO SEPTEMBER 1975

DATE	TIME	INSTANTANEOUS DISCHARGE (CFS)	DISSOLVED IRON (FE) (UG/L)	DISSOLVED SILICA (SIO2) (MG/L)	DISSOLVED CALCIUM (CA) (MG/L)	DISSOLVED MAGNESIUM (MG) (MG/L)	DISSOLVED SODIUM (NA) (MG/L)	DISSOLVED POTASSIUM (K) (MG/L)	BICARBONATE (HCO3) (MG/L)
OCT.									
04...	0950	83	20	15	22	11	34	2.4	93
17...	1030	86	10	8.8	21	9.3	33	2.9	71
31...	1045	80	20	8.5	24	9.1	34	2.9	63
NOV.									
12...	1200	70	10	8.1	25	8.8	34	3.4	68
25...	1200	73	20	7.9	22	10	35	2.8	49
DEC.									
13...	1000	88	10	8.5	21	9.3	36	3.9	89
JAN.									
22...	1130	34	40	8.7	21	8.8	37	2.1	36
FEB.									
24...	1100	.25	10	17	35	8.3	34	3.9	124
JUNE									
10...	0715	50	60	28	59	25	69	5.7	272
10...	1140	50	20	7.2	22	11	38	2.7	78
10...	1300	50	40	7.3	26	11	39	2.7	86
11...	1115	50	40	8.9	24	11	40	2.9	104
JULY									
31...	0900	73	30	7.0	24	12	43	2.8	108
SEP.									
09...	1100	44	20	7.3	24	12	43	2.6	86

DATE	CARBONATE (CO3) (MG/L)	ALKALINITY AS CACO3 (MG/L)	DISSOLVED SULFATE (SO4) (MG/L)	DISSOLVED CHLORIDE (CL) (MG/L)	DISSOLVED FLUORIDE (F) (MG/L)	DISSOLVED NITRITE PLUS NITRATE (N) (MG/L)	DISSOLVED SOLIDS (SUM OF CONSTITUENTS) (MG/L)	DISSOLVED SOLIDS (TONS PER AC-FT)	DISSOLVED SOLIDS (TONS PER DAY)
OCT.									
04...	0	76	37	42	.3	3.5	225	.31	50.4
17...	10	75	32	42	.1	.01	194	.26	45.0
31...	15	77	30	42	.1	.01	197	.27	42.6
NOV.									
12...	12	76	32	43	.1	.02	200	.27	37.8
25...	23	78	31	42	.1	.00	198	.27	39.0
DEC.									
13...	0	73	33	46	.1	.06	202	.27	48.0
JAN.									
22...	26	73	33	47	.1	.03	202	.27	18.5
FEB.									
24...	4	108	40	41	.4	1.9	253	.34	.17
JUNE									
10...	0	223	70	66	.2	.08	458	.62	61.8
10...	7	76	42	48	.1	11	217	.30	29.3
10...	1	72	42	50	.1	.13	222	.30	30.0
11...	0	85	42	51	.2	.05	232	.32	31.3
JULY									
31...	1	90	44	56	.2	.04	244	.33	48.1
SEP.									
09...	12	91	40	54	.2	.08	238	.32	28.3

DATE	HARDNESS (CA,MG) (MG/L)	NONCARBONATE HARDNESS (MG/L)	PERCENT SODIUM	SODIUM ADSORPTION RATIO	SPECIFIC CONDUCTANCE (MICROMHOS)	PH (UNITS)	TEMPERATURE (DEG C)	DISSOLVED BORON (B) (UG/L)
OCT.								
04...	100	24	42	1.5	362	8.6	18.0	360
17...	91	16	43	1.5	351	9.2	18.0	170
31...	97	21	42	1.5	350	9.5	19.2	90
NOV.								
12...	99	23	42	1.5	357	9.4	19.5	160
25...	96	18	43	1.6	355	9.5	17.0	170
DEC.								
13...	91	18	45	1.6	360	8.7	12.0	140
JAN.								
22...	89	16	47	1.7	366	10.0	14.2	160
FEB.								
24...	120	13	37	1.3	424	10.0	17.0	60
JUNE								
10...	250	27	37	1.9	765	9.0	--	100
10...	100	25	44	1.7	382	8.9	25.5	190
10...	110	38	43	1.6	400	9.1	27.5	190
11...	110	20	44	1.7	400	9.1	25.0	190
JULY								
31...	110	19	45	1.8	425	8.7	21.0	200
SEP.								
09...	110	19	45	1.8	420	9.0	20.3	180

11073470 CUCAMONGA CREEK NEAR UPLAND, CALIF.

LOCATION.--Lat 34°10'46", long 117°37'41", in NE¼NE¼NE¼ sec.17, T.1 N., R.7 W., San Bernardino County, on left bank 0.1 mi (0.2 km) upstream from unnamed tributary, and 5.7 mi (9.2 km) north of Upland.

DRAINAGE AREA.--9.68 mi^2 (25.07 km^2).

PERIOD OF RECORD.--October 1927 to September 1975 (discontinued). Monthly discharge only for October to December 1928, published in WSP 1315-B.

GAGE.--Water-stage recorder. Altitude of gage is 2,600 ft (792 m), from topographic map. See WSP 1735 for history of changes prior to Dec. 13, 1938. Dec. 14, 1938, to Mar. 30, 1971, at site 0.6 mi (1 km) downstream at different datums.

AVERAGE DISCHARGE.--48 years, 7.84 ft^3/s (0.222 m^3/s), 5,680 acre-ft/yr (7.00 hm^3/yr).

EXTREMES.--Current year: Maximum discharge, 190 ft^3/s (5.38 m^3/s) Mar. 6 (gage height, 2.82 ft or 0.860 m); minimum daily, 2.4 ft^3/s (0.07 m^3/s) Sept. 24-29.

Period of record: Maximum discharge, 14,100 ft^3/s (399 m^3/s) Jan. 25, 1969 (gage height, 14.44 ft or 4.401 m, site and datum then in use), from rating curve extended above 450 ft^3/s (12.7 m^3/s) on basis of slope-area measurements at gage heights 6.22 ft (1.896 m) and 12.44 ft (3.792 m); minimum daily, 0.30 ft^3/s (0.008 m^3/s) Oct. 5, 6, 1962.

REMARKS.--Records fair. No regulation or diversion above station. See schematic diagram of Santa Ana River basin.

DISCHARGE, IN CUBIC FEET PER SECOND, WATER YEAR OCTOBER 1974 TO SEPTEMBER 1975
MEAN VALUES

DAY	OCT	NOV	DEC	JAN	FEB	MAR	APR	MAY	JUN	JUL	AUG	SEP
1	3.0	4.4	4.7	3.7	3.2	3.7	8.2	7.5	5.1	3.7	3.0	2.6
2	3.0	4.2	4.5	3.7	3.2	3.7	7.5	7.3	5.8	3.2	2.8	2.7
3	3.0	4.1	4.5	3.5	7.0	3.7	7.1	7.2	5.8	3.4	2.9	2.6
4	3.0	3.9	20	3.5	6.0	3.7	7.0	7.8	5.8	3.4	3.0	2.7
5	3.0	3.9	6.0	3.5	5.5	4.2	8.8	7.9	5.7	3.3	3.0	2.5
6	3.0	3.8	4.9	3.5	4.9	23	10	7.9	5.6	3.3	2.9	2.6
7	3.0	3.7	4.7	3.5	4.2	11	9.0	7.6	4.9	3.3	3.0	2.6
8	3.0	3.7	4.5	3.5	4.2	16	8.7	7.2	4.4	3.2	2.9	2.9
9	3.1	3.7	4.4	3.5	5.6	14	9.6	7.2	4.2	3.3	3.1	2.9
10	3.2	3.7	4.2	3.5	7.6	13	9.7	6.8	4.1	3.4	3.1	2.6
11	3.2	3.7	4.1	3.5	6.2	13	8.9	6.3	4.1	3.3	3.1	2.8
12	3.2	3.7	4.1	3.5	5.4	11	8.6	6.2	4.1	3.3	3.1	2.8
13	3.1	3.7	3.9	3.5	5.3	11	8.3	6.2	4.1	3.4	3.0	2.8
14	3.0	3.7	3.9	3.5	5.5	12	8.3	6.2	4.1	3.5	3.4	2.8
15	3.0	3.7	3.9	3.5	5.2	11	8.8	6.1	4.0	3.5	3.3	2.8
16	3.0	3.7	3.8	3.5	4.5	10	9.2	5.8	4.3	3.5	3.3	2.8
17	3.0	3.7	3.7	3.5	4.2	9.5	9.2	5.8	4.5	3.7	3.2	2.6
18	3.0	3.7	3.7	3.5	4.2	8.9	8.9	6.1	4.5	3.7	3.4	2.8
19	3.0	3.7	3.7	3.2	4.1	8.4	8.2	5.8	4.5	3.9	3.2	2.6
20	3.2	3.7	3.5	3.2	3.9	8.4	8.1	6.8	4.4	3.8	3.1	2.7
21	3.2	3.5	3.5	3.4	3.9	8.3	7.9	6.6	4.3	3.9	3.0	2.6
22	3.2	3.5	3.5	3.2	3.9	9.6	7.9	6.0	3.9	4.1	2.8	2.5
23	3.2	3.5	3.8	3.2	3.9	9.1	7.9	5.4	3.9	4.4	2.8	2.6
24	3.2	3.5	4.5	3.2	3.6	8.4	7.9	5.1	3.8	4.6	2.8	2.4
25	3.2	3.5	4.5	3.2	3.7	8.4	7.9	4.9	3.7	4.5	2.8	2.4
26	6.0	3.5	4.5	3.3	3.7	7.9	7.9	4.8	3.8	4.6	2.8	2.4
27	5.8	3.5	4.0	3.2	3.7	7.9	7.9	4.9	4.0	4.5	2.7	2.4
28	4.9	10	3.9	3.2	3.7	7.9	7.4	4.7	3.9	4.0	2.7	2.4
29	4.5	7.4	3.9	3.2	---	7.7	7.4	4.6	3.9	3.6	3.0	2.4
30	4.5	5.4	3.9	3.2	---	7.3	7.4	4.4	4.0	3.3	3.0	2.8
31	4.5	---	3.9	3.2	---	7.3	---	4.7	---	3.1	2.7	---
TOTAL	107.2	123.4	144.6	105.3	130.0	289.0	249.6	191.8	133.2	113.7	92.9	79.1
MEAN	3.46	4.11	4.66	3.40	4.64	9.32	8.32	6.19	4.44	3.67	3.00	2.64
MAX	6.0	10	20	3.7	7.6	23	10	7.9	5.8	4.6	3.4	2.9
MIN	3.0	3.5	3.5	3.2	3.2	3.7	7.0	4.4	3.7	3.1	2.7	2.4
AC-FT	213	245	287	209	258	573	495	380	264	226	184	157

CAL YR 1974 TOTAL 2749.3 MEAN 7.53 MAX 90 MIN 2.8 AC-FT 5450
WTR YR 1975 TOTAL 1759.8 MEAN 4.82 MAX 23 MIN 2.4 AC-FT 3490

Peak discharge (base, 80 ft^3/s).--Dec. 4 (time and discharge unknown); Mar. 6 (0615) 190 ft^3/s (2.82 ft).

NOTE.--No gage-height record Dec. 4-12.

11073495 CUCAMONGA CREEK NEAR MIRA LOMA, CALIF.

LOCATION.--Lat 33°58'58", long 117°35'55", in SW¼SW¼NE¼ sec.22, T.2 S., R.7 W., San Bernardino County, on left levee 200 ft (61 m) upstream from Merrill Avenue, and 4.6 mi (7.4 km) west of Mira Loma.

DRAINAGE AREA.--75.8 mi^2 (196.3 km^2).

PERIOD OF RECORD.--January 1968 to current year.

GAGE.--Water-stage recorder. Datum of gage is 655.3 ft (199.74 m) above mean sea level.

AVERAGE DISCHARGE.--7 years, 3.11 ft^3/s (0.0881 m^3/s), 2,250 acre-ft/yr (2.77 hm^3/yr).

EXTREMES.--Current year: Maximum discharge, 294 ft^3/s (8.33 m^3/s) Dec. 4 (gage height, 1.79 ft or 0.546 m); no flow most of year.
Period of record: Maximum discharge, 9,100 ft^3/s (258 m^3/s) Jan. 25, 1969 (gage height, 7.08 ft or 2.158 m, from floodmark), on basis of slope-area measurement of maximum flow; no flow most of each year.

REMARKS.--Records good. Extensive ground-water withdrawals for municipal supply and irrigation. See schematic diagram of Santa Ana River basin.

DISCHARGE, IN CUBIC FEET PER SECOND, WATER YEAR OCTOBER 1974 TO SEPTEMBER 1975
MEAN VALUES

DAY	OCT	NOV	DEC	JAN	FEB	MAR	APR	MAY	JUN	JUL	AUG	SEP
1			0		0	0						
2			0		0	0						
3			0		4.5	0						
4			40		0	0						
5			.22		0	0						
6			.15		0	19						
7			0		0	0						
8			0		0	6.8						
9			0		0	.01						
10			0		0	0						
11			0		0	0						
12			0		0	0						
13			0		0	0						
14			0		0	0						
15			0		0	0						
16			0		0	0						
17			0		0	0						
18			0		0	0						
19			0		0	0						
20			0		0	0						
21			0		0	0						
22			0		0	0						
23			0		0	0						
24			0		0	0						
25			0		0	0						
26			0		0	0						
27			0		0	0						
28			0		0	0						
29			0		---	0						
30			0		---	0						
31		---	0		---	0	---		---			---
TOTAL	0	0	40.37	0	4.5	25.81	0	0	0	0	0	0
MEAN	0	0	1.30	0	.16	.83	0	0	0	0	0	0
MAX	0	0	40	0	4.5	19	0	0	0	0	0	0
MIN	0	0	0	0	0	0	0	0	0	0	0	0
AC-FT	0	0	80	0	8.9	51	0	0	0	0	0	0

CAL YR 1974 TOTAL 345.19 MEAN .95 MAX 204 MIN 0 AC-FT 685
WTR YR 1975 TOTAL 70.68 MEAN .19 MAX 40 MIN 0 AC-FT 140

Peak discharge (base, 300 ft^3/s).--No peak above base.

11074000 SANTA ANA RIVER BELOW PRADO DAM, CALIF.
(National stream-quality accounting network station)

LOCATION.--Lat 33°53'00", long 117°38'40", in La Sierra Grant, Riverside County, on left bank of outlet channel, 2,500 ft (762 m) downstream from axis of Prado Dam, and 4.5 mi (7.2 km) west of Corona.

DRAINAGE AREA.--1,490 mi^2 (3,859 km^2), excludes 768 mi^2 (1,989 km^2) above Lake Elsinore.

PERIOD OF RECORD.--May 1930 to November 1939 (irrigation seasons only), March 1940 to current year. Published as "at Santa Fe Railroad Bridge, near Prado" May 1930 to November 1931, as "at Atchison, Topeka, and Santa Fe Railroad Bridge, near Prado" May 1932 to November 1939, and as "below Prado Dam, near Prado" March 1940 to September 1950.

GAGE.--Water-stage recorder and concrete control since August 1944. Datum of gage is approximately 449 ft (136.9 m) above mean sea level (Corps of Engineers Survey). Prior to Mar. 18, 1940, at about same site at various datums.

EXTREMES.--Current year: Maximum discharge, 1,020 ft^3/s (28.9 m^3/s) Dec. 4 (gage height, 3.72 ft or 1.134 m); maximum gage height, 4.26 ft (1.298 m) Dec. 4 (backwater); minimum daily, 45 ft^3/s (1.27 m^3/s) Aug. 28.
Period of record: Maximum discharge, 5,800 ft^3/s (164 m^3/s) Jan. 26, 1969 (gage height, 5.75 ft or 1.753 m); minimum daily, 3.0 ft^3/s (0.085 m^3/s) Sept. 24-30, 1973.
Flood of Mar. 2, 1938, 100,000 ft^3/s (2,830 m^3/s), by slope-area measurement at site 2.5 mi (4.0 km) downstream.

REMARKS.--Records good. Flow regulated since 1941 by Prado Reservoir, capacity, 201,200 acre-ft (248 hm^3) and Big Bear Lake (see sta 11049000). Natural streamflow affected by extensive ground-water withdrawals, diversion for irrigation, and return flow from irrigated areas. California Water Project released 27,300 acre-ft (33.7 hm^3) to basin (see sta 11073360). See schematic diagram of Santa Ana River basin.

DISCHARGE, IN CUBIC FEET PER SECOND, WATER YEAR OCTOBER 1974 TO SEPTEMBER 1975
MEAN VALUES

DAY	OCT	NOV	DEC	JAN	FEB	MAR	APR	MAY	JUN	JUL	AUG	SEP
1	132	87	140	92	94	100	103	90	72	140	133	81
2	133	74	150	87	94	98	102	91	70	143	133	81
3	139	70	172	92	140	98	102	87	70	150	128	85
4	143	71	536	170	125	104	106	85	70	150	123	86
5	145	75	798	169	147	107	106	85	70	148	130	86
6	143	68	177	171	158	185	163	80	69	146	131	88
7	142	65	123	146	165	180	135	79	66	145	130	87
8	110	63	106	142	179	181	123	78	65	148	127	90
9	57	65	104	99	175	194	347	77	66	144	132	103
10	54	63	108	92	178	194	165	76	111	142	139	99
11	55	71	118	90	148	194	115	75	119	140	134	89
12	137	128	191	86	92	195	106	75	114	141	109	104
13	142	135	190	87	92	192	105	75	116	145	108	106
14	145	138	187	113	107	191	103	75	112	157	120	104
15	140	143	186	116	131	189	105	76	113	204	122	102
16	145	143	187	113	130	188	104	76	125	195	122	98
17	154	144	167	109	128	186	116	75	161	195	123	98
18	149	145	127	108	126	174	111	75	159	193	122	98
19	156	148	129	113	138	162	102	74	159	194	126	96
20	160	147	126	117	159	160	99	74	148	194	125	96
21	174	146	128	117	154	159	97	74	155	191	125	96
22	218	150	136	118	144	158	98	74	158	158	128	94
23	216	158	131	120	130	158	96	74	157	48	132	94
24	211	144	129	116	106	157	96	74	160	153	126	94
25	211	141	120	93	98	172	104	73	153	200	111	96
26	209	143	117	89	100	207	91	71	151	197	81	90
27	215	146	124	90	107	246	85	71	128	194	81	83
28	259	149	151	92	108	238	86	69	149	191	45	52
29	294	142	231	93	---	222	86	69	143	194	56	74
30	245	136	133	96	---	123	86	69	140	165	78	95
31	215	---	113	100	---	97	---	72	---	135	83	---
TOTAL	5048	3498	5535	3436	3653	5209	3443	2368	3549	5040	3563	2745
MEAN	163	117	179	111	130	168	115	76.4	118	163	115	91.5
MAX	294	158	798	171	179	246	347	91	161	204	139	106
MIN	54	63	104	86	92	97	85	69	65	48	45	52
AC-FT	10010	6940	10980	6820	7250	10330	6830	4700	7040	10000	7070	5440

CAL YR 1974 TOTAL 68171 MEAN 187 MAX 1440 MIN 54 AC-FT 135200
WTR YR 1975 TOTAL 47087 MEAN 129 MAX 798 MIN 45 AC-FT 93400

11074000 SANTA ANA RIVER BELOW PRADO DAM, CALIF.--Continued

PERIOD OF RECORD.--Chemical analyses: October 1966 to current year.
Chloride: October 1970 to September 1971.
Specific conductance: October 1969 to current year.
Water temperatures: October 1969 to current year.
Sediment records: October 1973 to current year.

EXTREMES.--Current year:
Specific conductance: Maximum, 1,400 micromhos Dec. 6; minimum, 316 micromhos Dec. 4.
Water temperatures: Maximum, 26.0°C July 10, 11; minimum recorded, 4.0°C Dec. 25.
Sediment concentrations: Maximum daily, 650 mg/l Mar. 30; minimum daily, 15 mg/l on several days during March.
Sediment discharge: Maximum daily, 978 tons (887 tonnes) Dec. 4; minimum daily, 5.0 tons (4.5 tonnes) Feb. 13.
Period of record:
Specific conductance: Maximum, 1,830 micromhos Apr. 30, 1971; minimum, 316 micromhos Dec. 4, 1974.
Water temperatures: Maximum, 36.0°C Sept. 4, 1972; minimum, 2.5°C Dec. 30, 1969.
Sediment concentrations: Maximum daily, 1,300 mg/l Jan. 8, 1974; minimum daily, 15 mg/l on several days in 1975.
Sediment discharge: Maximum daily, 5,050 tons (4,580 tonnes) Jan. 8, 1974; minimum daily 5.0 tons (4.5 tonnes) Feb. 13, 1975.

REMARKS.--The letter "A" following a date indicates chemical-quality data furnished by California Department of Water Resources. Periods of missing temperature record due to recorder malfunction.

WATER QUALITY DATA, WATER YEAR OCTOBER 1974 TO SEPTEMBER 1975

DATE	TIME	INSTANTANEOUS DISCHARGE (CFS)	DISSOLVED SOLIDS (RESIDUE AT 180 C) (MG/L)	SPECIFIC CONDUCTANCE (MICROMHOS)	TEMPERATURE (DEG C)
OCT.					
01...	1040	139	357	614	18.8
10...	0830	54	714	1180	14.1
18...	0850	150	380	645	14.7
24...	0745	215	383	600	16.5
25...	1230	213	363	620	16.5
NOV.					
04...	0840	75	742	1220	12.1
11...	1300	63	755	1220	15.3
18...	1130	148	512	843	13.5
21...	1330	152	474	780	15.5
27...	1050	148	507	836	10.0
DEC.					
02...	0830	143	514	856	8.5
04...	1000	347	605	947	12.5
05...	1330	822	596	961	13.7
11...	0940	113	747	1200	8.7
19...	1030	129	540	916	8.8
20...	0815	126	570	820	8.5
27...	1440	133	541	904	9.5
JAN.					
02...	1245	88	729	1200	7.8
08...	0915	149	546	912	11.8
13...	1330	88	712	1160	13.0
21...	1045	120	666	1060	9.5
23...	1145	121	643	1070	9.8
23...	1400	118	670	930	13.5
29...	0830	98	723	1180	6.0
FEB.					
03...	0830	209	617	1030	10.0
03...	1020	291	488	827	10.0
04...	1415	124	536	908	10.5
06...	1030	160	549	910	11.0
10...	0830	178	695	1130	13.2
21...	0600	158	728	1190	12.4
21...	0800	157	737	1100	13.0
25...	1150	100	717	1240	10.5
MAR.					
03...	0900	103	706	1150	11.7
06...	0910	185	245	400	12.5
06...	1400	329	358	593	12.8
11...	1445	194	502	825	14.0
20...	0945	160	639	1040	13.8
27...	1530	249	698	1100	14.0
28...	0700	238	674	950	11.5
31...	0940	98	731	1190	10.5
APR.					
01...	1245	102	722	1160	15.8
09...	1030	312	454	755	11.0
15...	1500	100	695	1120	17.0
22...	0810	104	697	1120	14.8
24...	1230	96	736	1000	18.5
28...	1110	94	686	1100	14.8
MAY					
07...	0900	75	703	1140	12.0
13...	1100	81	692	1150	18.0
20...	1015	80	704	1130	15.0
23...	0700	74	698	1100	14.5
29...	1020	58	695	1120	18.2
29...	1230	60	689	1110	20.4

11074000 SANTA ANA RIVER BELOW PRADO DAM, CALIF.--Continued

WATER QUALITY DATA, WATER YEAR OCTOBER 1974 TO SEPTEMBER 1975

DATE	TIME	INSTANTANEOUS DISCHARGE (CFS)	DISSOLVED SOLIDS (RESIDUE AT 180 C) (MG/L)	SPECIFIC CONDUCTANCE (MICROMHOS)	TEMPERATURE (DEG C)
JUNE					
02...	0950	56	688	1140	17.1
10...	0945	120	622	986	17.8
16...	1400	117	509	849	19.0
17...	1030	165	463	764	17.2
23...	1150	163	439	725	19.6
25...	1200	160	436	741	18.2
27...	0700	88	579	850	16.5
JULY					
01...	1430	150	419	703	21.5
17...	1515	196	373	651	22.8
24...	1200	203	414	625	21.0
28...	1300	203	368	610	21.7
AUG.					
04...	1250	125	401	692	21.8
18...	1400	125	443	732	20.8
26...	1000	80	494	822	17.7
29...	0730	40	710	1175	16.0
SEP.					
03...	1200	90	482	798	19.3
04...	1515	84	493	780	23.5
16...	0745	104	466	786	20.4
26...	0715	96	494	800	17.0
30...	1300	96	491	812	19.7

DATE	TIME	INSTANTANEOUS DISCHARGE (CFS)	DISSOLVED SILICA (SIO2) (MG/L)	DISSOLVED IRON (FE) (UG/L)	DISSOLVED CALCIUM (CA) (MG/L)	DISSOLVED MAGNESIUM (MG) (MG/L)	DISSOLVED SODIUM (NA) (MG/L)	DISSOLVED POTASSIUM (K) (MG/L)	BICARBONATE (HCO3) (MG/L)	CARBONATE (CO3) (MG/L)
OCT.										
01...	1000	139	15	50	43	15	57	4.6	153	--
10...	0930	54	29	30	100	27	100	8.6	312	--
18...	1100	150	15	20	47	12	59	4.6	172	--
25...	1230	213	14	20	46	14	57	4.0	158	--
30...	0900	245	16	30	51	15	69	5.7	181	--
NOV.										
11...	1315	63	28	40	100	25	120	7.0	303	--
18...	1315	148	17	40	70	15	77	5.9	212	--
27...	1115	145	17	1100	67	19	75	5.8	218	--
DEC.										
03...	1330	183	16	50	60	17	71	6.1	195	--
11...	1000	110	18	20	98	24	110	9.7	303	--
18...	1130	128	23	60	70	21	87	7.0	229	--
27...	1345	133	19	90	71	18	82	6.8	243	--
31...	0910	120	25	30	97	23	110	9.2	294	--
JAN.										
09...	0930	100	26	20	91	23	110	8.1	308	--
15...	1230	120	24	40	82	22	94	8.0	265	--
21...	1045	120	25	30	89	22	100	7.7	304	--
27...	1400	90	28	80	100	25	110	8.7	331	--
FEB.										
06...	1030	160	18	50	70	17	83	12	242	--
12...	1200	92	21	100	90	22	95	11	310	--
18...	1230	125	24	40	98	24	110	9.7	344	--
25...	1150	100	24	80	100	24	110	9.1	328	--
MAR.										
05...	0930	110	24	10	96	25	110	8.2	298	0
12...	0945	194	12	50	49	14	62	10	182	0
19...	0900	173	21	30	84	22	94	12	293	0
24...	1200	168	23	30	87	22	97	10	311	0
31...	0940	98	24	120	100	28	100	9.2	313	0
APR.										
09...	1100	340	12	70	57	16	76	7.6	203	0
17...	1230	118	26	20	86	23	100	9.5	302	0
24...	1030	102	26	40	96	24	100	8.3	314	0
28...	1110	94	25	20	95	24	98	8.3	313	0
MAY										
07...	0900	75	27	40	100	24	110	7.6	324	0
16...	0830	80	27	40	96	24	110	8.5	317	0
21...	0900	69	27	40	100	26	100	7.7	317	0
29...	1230	60	27	60	95	25	110	9.2	308	0
JUNE										
04...	0830	63	27	40	91	23	100	9.0	279	0
10...	1100	130	21	40	79	21	88	9.1	208	0
17...	1030	165	16	70	56	18	71	6.0	185	0
23...	1150	163	16	50	57	17	68	5.1	178	0
JULY										
02...	1500	148	15	50	54	15	67	5.2	163	0
19...	1300	196	13	20	46	17	63	4.8	158	0
28...	1300	203	13	30	44	15	59	4.8	155	0
AUG.										
26...	1000	80	18	30	64	19	78	6.2	205	0
SEP.										
30...	1300	96	20	290	62	17	76	6.8	192	0

11074000 SANTA ANA RIVER BELOW PRADO DAM, CALIF.--Continued

WATER QUALITY DATA, WATER YEAR OCTOBER 1974 TO SEPTEMBER 1975

DATE	ALKA-LINITY AS CACO3 (MG/L)	DIS-SOLVED SULFATE (SO4) (MG/L)	DIS-SOLVED CHLO-RIDE (CL) (MG/L)	DIS-SOLVED FLUO-RIDE (F) (MG/L)	TOTAL NITRITE PLUS NITRATE (N) (MG/L)	DIS-SOLVED NITRITE PLUS NITRATE (N) (MG/L)	AMMONIA NITRO-GEN (N) (MG/L)	TOTAL ORGANIC NITRO-GEN (N) (MG/L)	TOTAL KJEL-DAHL NITRO-GEN (N) (MG/L)
OCT.									
01...	125	58	67	.3	3.5	3.4	1.6	.20	1.8
10...	256	140	130	.6	8.0	4.7	4.2	3.3	7.5
18...	141	66	70	.3	2.6	1.6	1.7	.30	2.0
25...	130	62	68	.2	2.2	2.2	.50	.50	1.0
30...	148	78	76	.3	2.3	2.0	1.2	.90	2.1
NOV.									
11...	249	140	130	.6	5.0	4.9	3.6	.50	4.1
18...	174	84	95	.4	3.6	3.6	1.5	.60	2.1
27...	179	86	93	.4	2.9	2.8	2.0	.70	2.7
DEC.									
03...	160	79	88	.3	5.0	4.3	1.3	.70	2.0
11...	249	130	140	.4	5.5	5.3	.11	.77	.88
18...	188	100	100	.5	3.2	3.1	1.8	1.1	2.9
27...	199	99	100	.4	3.9	3.8	2.8	.90	3.7
31...	241	140	140	.6	6.7	5.5	3.2	.90	4.1
JAN.									
09...	253	120	130	.6	5.0	4.5	4.6	.50	5.1
15...	217	110	120	.5	4.1	4.3	3.9	1.1	5.0
21...	249	120	120	.5	4.8	4.7	3.9	.50	4.4
27...	271	120	130	.5	3.3	--	5.2	.60	5.8
FEB.									
06...	198	100	98	.5	3.1	3.1	4.2	1.1	5.3
12...	254	110	120	.5	2.2	2.1	2.0	1.7	3.7
18...	282	130	130	.6	3.1	3.2	3.5	--	--
25...	269	120	120	.6	6.0	5.2	3.5	2.0	5.5
MAR.									
05...	244	110	130	.6	7.3	5.6	3.9	1.2	5.1
12...	149	73	70	.7	3.5	2.4	1.0	1.0	2.0
19...	240	98	110	.8	2.7	2.6	1.8	1.3	3.1
24...	255	110	120	.9	3.5	3.0	3.1	1.9	5.0
31...	257	140	130	.7	6.0	5.6	3.1	2.0	5.1
APR.									
09...	167	82	83	.7	3.0	2.9	.79	1.9	2.7
17...	248	100	120	.6	11	11	6.5	.90	7.4
24...	258	120	120	.6	9.5	9.4	4.2	1.6	5.8
28...	257	120	120	.5	7.3	7.1	2.6	1.8	4.4
MAY									
07...	266	130	120	.6	6.3	9.4	3.9	.90	4.8
16...	260	130	120	.6	7.0	7.0	3.7	1.5	5.2
21...	260	120	120	.6	10	5.7	3.7	.60	4.3
29...	253	130	120	.6	5.0	4.9	1.5	3.2	4.7
JUNE									
04...	229	120	110	.6	9.8	4.8	4.9	--	--
10...	171	150	97	.5	3.4	3.3	3.5	.30	3.8
17...	152	87	81	.4	3.4	2.9	1.6	1.3	2.9
23...	146	83	76	.3	4.2	3.9	1.6	.10	1.7
JULY									
02...	134	81	74	.3	3.8	3.8	1.4	1.2	2.6
19...	130	76	73	.4	1.6	1.8	1.1	--	--
28...	127	72	71	.3	1.4	1.4	.96	.34	1.3
AUG.									
26...	168	97	87	.4	3.9	3.6	1.9	.90	2.8
SEP.									
30...	157	94	85	.4	3.8	3.8	3.1	1.5	4.6

11074000 SANTA ANA RIVER BELOW PRADO DAM, CALIF.--Continued

WATER QUALITY DATA, WATER YEAR OCTOBER 1974 TO SEPTEMBER 1975

DATE	TOTAL NITRO-GEN (N) (MG/L)	TOTAL NITRO-GEN (NO3) (MG/L)	TOTAL PHOS-PHORUS (P) (MG/L)	DIS-SOLVED ORTHO. PHOS-PHORUS (P) (MG/L)	DIS-SOLVED SOLIDS (SUM OF CONSTI-TUENTS) (MG/L)	DIS-SOLVED SOLIDS (TONS PER AC-FT)	DIS-SOLVED SOLIDS (TONS PER DAY)	HARD-NESS (CA,MG) (MG/L)	NON-CAR-BONATE HARD-NESS (MG/L)
OCT.									
01...	5.3	23	1.2	.84	354	.48	133	170	44
10...	16	69	2.1	1.5	715	.97	104	360	110
18...	4.6	20	.87	.63	368	.50	149	170	26
25...	3.2	14	.94	.66	355	.49	209	170	43
30...	4.4	19	1.3	.92	412	.56	273	190	41
NOV.									
11...	9.1	40	2.5	2.0	728	.99	124	350	100
18...	5.7	25	1.2	.94	488	.66	195	240	63
27...	5.6	25	1.5	1.2	488	.66	191	250	67
DEC.									
03...	7.0	31	1.3	.89	456	.62	225	220	60
11...	6.4	28	2.2	1.0	707	.96	210	340	95
18...	6.1	27	1.7	1.2	539	.73	186	260	73
27...	7.6	34	1.6	1.3	537	.73	193	250	52
31...	11	48	2.5	2.1	721	.98	234	340	96
JAN.									
09...	10	45	2.4	1.9	687	.93	185	320	69
15...	9.1	40	2.2	1.8	616	.84	200	300	78
21...	9.2	41	3.0	2.2	662	.91	216	310	63
27...	9.1	40	2.5	2.1	721	.98	175	350	81
FEB.									
06...	8.4	37	1.9	1.5	536	.75	237	240	46
12...	5.9	26	1.5	1.1	635	.86	158	320	61
18...	--	--	2.2	1.8	716	.97	242	340	61
25...	12	51	2.4	2.1	699	.95	189	350	80
MAR.									
05...	12	55	3.0	2.3	683	.93	203	340	98
12...	5.5	24	1.3	.88	394	.54	206	180	31
19...	5.8	26	1.9	1.5	603	.82	282	300	60
24...	8.5	38	2.4	1.9	643	.87	292	310	53
31...	11	49	3.2	2.2	718	.99	193	370	110
APR.									
09...	5.7	25	1.1	.90	450	.61	413	210	42
17...	18	81	3.6	2.5	671	.91	214	310	62
24...	15	68	3.0	2.5	700	.95	193	340	81
28...	12	52	4.7	2.6	685	.93	174	340	79
MAY									
07...	11	49	2.9	2.4	728	.99	147	350	83
16...	12	54	2.9	2.3	711	.97	154	340	79
21...	14	63	2.7	2.0	689	.94	128	360	97
29...	9.7	43	2.6	2.2	698	.94	112	340	88
JUNE									
04...	--	--	2.4	2.2	647	.88	110	320	93
10...	7.2	32	1.9	1.6	588	.80	206	280	110
17...	6.3	28	1.6	1.2	444	.60	206	210	62
23...	5.9	26	1.6	1.1	431	.60	193	210	66
JULY									
02...	6.4	28	1.2	.88	412	.56	165	200	63
19...	--	--	1.1	.76	382	.52	202	180	55
28...	2.7	12	.98	.57	364	.50	202	170	45
AUG.									
26...	6.7	30	1.8	1.2	491	.67	107	240	70
SEP.									
30...	8.4	37	2.0	1.6	478	.67	127	220	67

11074000 SANTA ANA RIVER BELOW PRADO DAM, CALIF.--Continued

WATER QUALITY DATA, WATER YEAR OCTOBER 1974 TO SEPTEMBER 1975

DATE	PERCENT SODIUM	SODIUM ADSORPTION RATIO	SPECIFIC CONDUCTANCE (MICROMHOS)	PH (UNITS)	TEMPERATURE (DEG C)	TURBIDITY (JTU)	CHEMICAL OXYGEN DEMAND (HIGH LEVEL) (MG/L)	TOTAL ORGANIC CARBON (C) (MG/L)	DISSOLVED BORON (B) (UG/L)
OCT.									
01...	41	1.9	614	7.7	19.0	--	28	9.3	660
10...	37	2.3	1180	7.8	14.1	--	31	14	550
18...	43	2.0	645	7.8	15.5	--	18	8.2	260
25...	41	1.9	620	--	16.5	30	21	5.8	170
30...	43	2.2	725	7.8	14.0	--	33	8.4	230
NOV.									
11...	42	2.8	1220	7.8	15.3	--	27	11	450
18...	41	2.2	843	7.8	14.7	--	15	10	330
27...	39	2.1	840	7.9	10.0	--	30	6.2	300
DEC.									
03...	40	2.1	784	7.7	13.8	--	22	12	330
11...	40	2.6	1200	7.8	8.7	--	51	9.8	480
18...	41	2.3	934	7.8	9.6	--	25	13	370
27...	41	2.3	915	8.2	9.5	--	17	6.5	290
31...	41	2.6	1180	7.9	7.8	--	33	10	420
JAN.									
09...	42	2.7	1133	7.7	8.9	--	29	9.6	410
15...	40	2.4	1040	7.7	11.0	--	32	12	390
21...	40	2.5	1060	8.0	9.5	50	27	9.1	480
27...	40	2.6	1190	8.1	12.7	--	26	7.6	410
FEB.									
06...	41	2.3	910	7.5	11.0	--	50	16	290
12...	39	2.3	1040	7.5	13.2	--	72	15	310
18...	40	2.6	1170	7.5	11.5	--	39	16	400
25...	40	2.6	1240	7.8	10.5	--	60	11	420
MAR.									
05...	40	2.6	1130	7.7	13.4	--	44	17	470
12...	41	2.0	682	7.7	12.0	--	39	13	260
19...	39	2.4	1010	7.5	13.3	--	44	13	350
24...	40	2.4	1070	7.5	15.4	--	47	12	440
31...	37	2.3	1190	7.5	10.5	300	60	26	380
APR.									
09...	43	2.3	760	8.0	11.0	--	59	--	290
17...	40	2.5	1100	7.8	14.8	--	53	22	440
24...	38	2.4	1140	7.8	14.6	--	37	10	450
28...	38	2.3	1100	8.0	14.8	38	26	8.2	460
MAY									
07...	40	2.6	1140	7.0	12.0	--	34	8.4	490
16...	41	2.6	1140	7.4	15.7	--	35	8.9	530
21...	37	2.3	1140	7.2	12.5	--	34	6.2	480
29...	41	2.6	1110	8.0	20.4	40	31	14	490
JUNE									
04...	40	2.4	1120	8.2	16.6	--	37	9.4	550
10...	39	2.3	970	8.0	18.5	--	35	6.8	490
17...	41	2.1	764	7.8	17.2	--	24	11	320
23...	40	2.0	725	7.8	19.6	25	18	--	330
JULY									
02...	42	2.1	702	7.8	22.0	--	25	6.0	310
19...	42	2.0	657	7.7	21.6	--	24	16	310
28...	42	2.0	610	7.8	21.7	40	14	8.8	230
AUG.									
26...	41	2.2	822	7.9	17.7	66	39	12	390
SEP.									
30...	41	2.2	812	7.7	19.7	55	30	10	390

11074000 SANTA ANA RIVER BELOW PRADO DAM, CALIF.--Continued

WATER QUALITY DATA, WATER YEAR OCTOBER 1974 TO SEPTEMBER 1975

DATE	TIME	INSTANTANEOUS DISCHARGE (CFS)	DISSOLVED IRON (FE) (UG/L)	DISSOLVED CALCIUM (CA) (MG/L)	DISSOLVED MAGNESIUM (MG) (MG/L)	DISSOLVED SODIUM (NA) (MG/L)	DISSOLVED POTASSIUM (K) (MG/L)	BICARBONATE (HCO3) (MG/L)	CARBONATE (CO3) (MG/L)	ALKALINITY AS CACO3 (MG/L)
OCT.										
24...A	0745	215	--	48	12	54	3.9	155	0	127
NOV.										
21...A	1330	152	--	66	17	79	5.5	202	0	166
DEC.										
20...A	0815	126	--	72	20	86	6.6	222	0	182
JAN.										
23...A	1400	118	--	84	22	99	7.8	264	0	217
FEB.										
21...A	0800	157	--	96	24	108	9.4	301	0	247
MAR.										
28...A	0700	238	--	84	21	99	9.4	266	0	218
APR.										
24...A	1230	96	--	97	24	103	8.2	284	0	233
MAY										
23...A	0700	74	20	97	23	103	7.0	222	27	227
JUNE										
27...A	0700	88	--	71	21	81	6.6	220	0	180
JULY										
24...A	1200	203	--	49	14	64	5.1	157	0	129
AUG.										
29...A	0730	40	--	88	23	101	8.6	237	0	194
SEP.										
04...A	1515	84	--	57	17	74	5.9	179	0	147
26...A	0715	96	--	56	17	75	6.2	177	0	145

DATE	DISSOLVED SULFATE (SO4) (MG/L)	DISSOLVED CHLORIDE (CL) (MG/L)	DISSOLVED FLUORIDE (F) (MG/L)	TOTAL NITRATE (N) (MG/L)	TOTAL NITRITE (N) (MG/L)	AMMONIA NITROGEN (N) (MG/L)	TOTAL ORGANIC NITROGEN (N) (MG/L)	TOTAL KJELDAHL NITROGEN (N) (MG/L)	TOTAL PHOSPHORUS (P) (MG/L)	DISSOLVED ORTHO. PHOSPHORUS (P) (MG/L)
OCT.										
24...	64	71	.3	2.3	--	--	--	--	--	.72
NOV.										
21...	90	93	.5	5.0	--	--	--	--	--	1.1
DEC.										
20...	101	100	.6	5.9	--	--	--	--	--	1.5
JAN.										
23...	115	116	.8	8.6	--	--	--	--	--	1.8
FEB.										
21...	132	129	.8	8.1	--	--	--	--	--	2.2
MAR.										
28...	117	110	.7	7.0	--	--	--	--	--	2.4
APR.										
24...	130	123	.8	9.5	--	--	--	--	--	2.1
MAY										
23...	131	122	.8	7.9	--	--	--	--	--	--
JUNE										
27...	108	98	.7	6.1	--	--	--	--	--	1.0
JULY										
24...	80	72	.4	3.6	--	--	--	--	--	.80
AUG.										
29...	154	111	.8	12	--	--	--	--	--	1.5
SEP.										
04...	94	85	.5	5.0	.17	.00	.78	.78	3.3	.93
26...	97	82	.6	6.1	--	--	--	--	--	1.3

11074000 SANTA ANA RIVER BELOW PRADO DAM, CALIF.--Continued

WATER QUALITY DATA, WATER YEAR OCTOBER 1974 TO SEPTEMBER 1975

DATE	DIS-SOLVED SOLIDS (RESI-DUE AT 180 C) (MG/L)	DIS-SOLVED SOLIDS (TONS PER AC-FT)	TOTAL NON-FILT-RABLE RESIDUE (MG/L)	HARD-NESS (CA,MG) (MG/L)	NON-CAR-BONATE HARD-NESS (MG/L)	PERCENT SODIUM	SODIUM AD-SORP-TION RATIO	SPE-CIFIC CON-DUCT-ANCE (MICRO-MHOS)	PH (UNITS)	TEMPER-ATURE (DEG C)
OCT.										
24...	383	.52	80	173	46	40	1.8	600	7.6	16.5
NOV.										
21...	474	.64	55	234	68	42	2.2	780	7.8	15.5
DEC.										
20...	570	.78	96	262	80	41	2.3	820	7.7	8.5
JAN.										
23...	670	.91	44	304	87	41	2.5	930	8.0	13.5
FEB.										
21...	737	1.00	24	340	93	40	2.6	1100	7.6	13.0
MAR.										
28...	674	.92	37	299	81	41	2.5	950	7.7	11.5
APR.										
24...	736	1.00	71	341	110	39	2.4	1000	7.8	18.5
MAY										
23...	698	.95	104	337	110	39	2.4	1100	7.7	14.5
JUNE										
27...	579	.79	175	265	85	39	2.2	850	7.7	16.5
JULY										
24...	414	.56	256	181	52	43	2.1	625	7.6	21.0
AUG.										
29...	710	.97	145	316	120	40	2.5	1175	7.7	16.0
SEP.										
04...	493	.67	92	211	64	42	2.2	780	7.7	23.5
26...	494	.67	--	208	63	43	2.3	800	7.6	17.0

DATE	TUR-BID-ITY (JTU)	DIS-SOLVED OXYGEN (MG/L)	METHY-LENE BLUE ACTIVE SUB-STANCE (MG/L)	DIS-SOLVED ARSENIC (AS) (UG/L)	DIS-SOLVED BORON (B) (UG/L)	DIS-SOLVED CAD-MIUM (CD) (UG/L)	DIS-SOLVED COPPER (CU) (UG/L)	DIS-SOLVED LEAD (PB) (UG/L)	TOTAL MERCURY (HG) (UG/L)	DIS-SOLVED ZINC (ZN) (UG/L)
OCT.										
24...	36	9.1	.1	--	230	--	--	--	--	--
NOV.										
21...	24	9.5	.3	--	220	--	--	--	--	--
DEC.										
20...	38	10.2	.3	--	230	--	--	--	--	--
JAN.										
23...	21	10.9	.4	--	440	--	--	--	--	--
FEB.										
21...	13	7.9	.6	--	530	--	--	--	--	--
MAR.										
28...	26	9.2	.5	--	440	--	--	--	--	--
APR.										
24...	34	9.3	.5	--	520	--	--	--	--	--
MAY										
23...	68	8.4	--	0	420	0	0	0	.2	30
JUNE										
27...	52	7.2	.3	--	280	--	--	--	--	--
JULY										
24...	78	7.5	.3	--	260	--	--	--	--	--
AUG.										
29...	65	7.3	.3	--	440	--	--	--	--	--
SEP.										
04...	54	6.7	--	--	210	--	--	--	--	--
26...	60	6.8	.3	--	210	--	--	--	--	--

11074000 SANTA ANA RIVER BELOW PRADO DAM, CALIF.--Continued

BIOLOGICAL ANALYSES, WATER YEAR OCTOBER 1974 TO SEPTEMBER 1975

PHYTOPLANKTON

DATE	PHYLUM .CLASS ..ORDER ...FAMILY ....GENUS .....SPECIES	COMMON NAME	COUNT (CELLS/ML)	PERCENT OF TOTAL
OCT 25	CHLOROPHYTA	GREEN ALGAE		
	.CHLOROPHYCEAE			
	..CHLOROCOCCALES			
	...OOCYSTACEAE			
	....OOCYSTIS		92	3
	CHRYSOPHYTA	YELLOW-GREEN ALGAE		
	.BACILLARIOPHYCEAE	DIATOMS		
	..CENTRALES	CENTRIC		
	...COSCINODISCACEAE			
	....CYCLOTELLA		160	5
	....MELOSIRA		620	20
	..PENNALES	PENNATE		
	...ACHNANTHACEAE			
	....COCCONEIS		23	1
	...DIATOMACEAE			
	....DIATOMA		23	1
	...FRAGILARIACEAE			
	....SYNEDRA		320	11
	...GOMPHONEMATACEAE			
	....GOMPHONEMA		23	1
	...NAVICULACEAE	NAVICULOID		
	....GYROSIGMA		69	2
	....NAVICULA		160	5
	...NITZSCHIACEAE			
	....NITZSCHIA		160	5
	...ACHNANTHACEAE			
	....RHOIOCOSPHENIA		23	1
	CYANOPHYTA	BLUE-GREEN ALGAE		
	.MYXOPHYCEAE			
	..CHROOCOCCALES			
	...CHROOCOCCACEAE			
	....ANACYSTIS		420	14
	..OSCILLATORIALES	FILAMENTOUS		
	...OSCILLATORIACEAE			
	....LYNGBYA		460	15
	....OSCILLATORIA		460	15
	EUGLENOPHYTA			
	.CRYPTOPHYCEAE			
	..CRYPTOMONADALES			
	...CRYPTOMONADACEAE			
	....CRYPTOMONAS		23	1
	TOTAL PHYTOPLANKTON		3100	
DEC 27	CHRYSOPHYTA	YELLOW-GREEN ALGAE		
	.BACILLARIOPHYCEAE	DIATOMS		
	..CENTRALES	CENTRIC		
	...COSCINODISCACEAE			
	....CYCLOTELLA		89	5
	....MELOSIRA		59	3
	..PENNALES	PENNATE		
	...GOMPHONEMATACEAE			
	....GOMPHONEMA		30	2
	...NAVICULACEAE	NAVICULOID		
	....GYROSIGMA		30	2
	....NAVICULA		330	17
	...NITZSCHIACEAE			
	....NITZSCHIA		860	45
	CYANOPHYTA	BLUE-GREEN ALGAE		
	.MYXOPHYCEAE			
	..OSCILLATORIALES	FILAMENTOUS		
	...OSCILLATORIACEAE			
	....LYNGBYA		300	16
	....PHORMIDIUM		210	11
	TOTAL PHYTOPLANKTON		1900	

11074000 SANTA ANA RIVER BELOW PRADO DAM, CALIF.--Continued

BIOLOGICAL ANALYSES, WATER YEAR OCTOBER 1974 TO SEPTEMBER 1975

PHYTOPLANKTON

DATE	PHYLUM .CLASS ..ORDER ...FAMILY ....GENUS .....SPECIES	COMMON NAME	COUNT (CELLS/ML)	PERCENT OF TOTAL
JAN 21	CHLOROPHYTA	GREEN ALGAE		
	.CHLOROPHYCEAE			
	..CHLOROCOCCALES			
	...SCENEDESMACEAE			
	....SCENEDESMUS		440	19
	CHRYSOPHYTA	YELLOW-GREEN ALGAE		
	.BACILLARIOPHYCEAE	DIATOMS		
	..CENTRALES	CENTRIC		
	...COSCINODISCACEAE			
	....CYCLOTELLA		150	6
	....MELOSIRA		74	3
	..PENNALES	PENNATE		
	...FRAGILARIACEAE			
	....SYNEDRA		74	3
	...GOMPHONEMATACEAE			
	....GOMPHONEMA		74	3
	...NAVICULACEAE	NAVICULOID		
	....GYROSIGMA		74	3
	....NAVICULA		440	19
	...NITZSCHIACEAE			
	....NITZSCHIA		880	37
	...SURIRELLACEAE			
	....SURIRELLA		74	3
	EUGLENOPHYTA			
	.EUGLENOPHYCEAE			
	..EUGLENALES			
	...CHARACIACEAE			
	....DISTIGMA		74	3
	TOTAL PHYTOPLANKTON		2400	
FEB 25	CHLOROPHYTA	GREEN ALGAE		
	.CHLOROPHYCEAE			
	..CHLOROCOCCALES			
	...OCCYSTACEAE			
	....ANKISTRODESMUS		610	17
	CHRYSOPHYTA	YELLOW-GREEN ALGAE		
	.BACILLARIOPHYCEAE	DIATOMS		
	..CENTRALES	CENTRIC		
	...COSCINODISCACEAE			
	....CYCLOTELLA		76	2
	..PENNALES	PENNATE		
	...ACHNANTHACEAE			
	....ACHNANTHES		76	2
	...FRAGILARIACEAE			
	....SYNEDRA		990	28
	...NAVICULACEAE	NAVICULOID		
	....NAVICULA		760	21
	...NITZSCHIACEAE			
	....NITZSCHIA		690	19
	...SURIRELLACEAE			
	....SURIRELLA		150	4
	EUGLENOPHYTA			
	.EUGLENOPHYCEAE			
	..EUGLENALES			
	...EUGLENACEAE			
	....EUGLENA		230	6
	TOTAL PHYTOPLANKTON		3600	
MAR 31	CHRYSOPHYTA	YELLOW-GREEN ALGAE		
	.BACILLARIOPHYCEAE	DIATOMS		
	..PENNALES	PENNATE		
	...GOMPHONEMATACEAE			
	....GOMPHONEMA		740	12
	...NAVICULACEAE	NAVICULOID		
	....GYROSIGMA		250	4
	....NAVICULA		2500	38
	...NITZSCHIACEAE			
	....HANTZSCHIA		2000	31
	....NITZSCHIA		740	12
	...SURIRELLACEAE			
	....SURIRELLA		250	4
	TOTAL PHYTOPLANKTON		6400	

11074000 SANTA ANA RIVER BELOW PRADO DAM, CALIF.--Continued

BIOLOGICAL ANALYSES, WATER YEAR OCTOBER 1974 TO SEPTEMBER 1975

PHYTOPLANKTON

DATE	PHYLUM .CLASS ..ORDER ...FAMILY ....GENUS .....SPECIES	COMMON NAME	COUNT (CELLS/ML)	PERCENT OF TOTAL
APR 28	CHRYSOPHYTA	YELLOW-GREEN ALGAE		
	.BACILLARIOPHYCEAE	DIATOMS		
	..PENNALES	PENNATE		
	...GOMPHONEMATACEAE			
	....GOMPHONEMA		34	2
	...NAVICULACEAE	NAVICULOID		
	....NAVICULA		170	9
	...NITZSCHIACEAE			
	....NITZSCHIA		440	24
	...SURIRELLACEAE			
	....CYMATOPLEURA		34	2
	CYANOPHYTA	BLUE-GREEN ALGAE		
	.MYXOPHYCEAE			
	..CHROOCOCCALES			
	...CHROOCOCCACEAE			
	....ANACYSTIS		140	7
	..OSCILLATORIALES	FILAMENTOUS		
	...OSCILLATORIACEAE			
	....OSCILLATORIA		920	50
	EUGLENOPHYTA			
	.EUGLENOPHYCEAE			
	..EUGLENALES			
	...EUGLENACEAE			
	....EUGLENA		100	6
	TOTAL PHYTOPLANKTON		1800	
MAY 29	CHLOROPHYTA	GREEN ALGAE		
	.CHLOROPHYCEAE			
	..VOLVOCALES			
	...CHLAMYDOMONADACEAE			
	....CHLAMYDOMONAS		110	3
	CHRYSOPHYTA	YELLOW-GREEN ALGAE		
	.BACILLARIOPHYCEAE	DIATOMS		
	..CENTRALES	CENTRIC		
	...COSCINODISCACEAE			
	....CYCLOTELLA		340	10
	..PENNALES	PENNATE		
	...FRAGILARIACEAE			
	....SYNEDRA		340	10
	...GOMPHONEMATACEAE			
	....GOMPHONEMA		230	6
	...NAVICULACEAE	NAVICULOID		
	....NAVICULA		680	19
	...NITZSCHIACEAE			
	....NITZSCHIA		1500	42
	...SURIRELLACEAE			
	....SURIRELLA		110	3
	EUGLENOPHYTA			
	.EUGLENOPHYCEAE			
	..EUGLENALES			
	...EUGLENACEAE			
	....EUGLENA		230	6
	TOTAL PHYTOPLANKTON		3500	

11074000 SANTA ANA RIVER BELOW PRADO DAM, CALIF.--Continued

BIOLOGICAL ANALYSES, WATER YEAR OCTOBER 1974 TO SEPTEMBER 1975

PHYTOPLANKTON

DATE	PHYLUM .CLASS ..ORDER ...FAMILY ....GENUS .....SPECIES	COMMON NAME	COUNT (CELLS/ML)	PERCENT OF TOTAL
JUNE 23	CHLOROPHYTA	GREEN ALGAE		
	.CHLOROPHYCEAE			
	..CHLOROCOCCALES			
	...OCCYSTACEAE			
	....ANKISTRODESMUS		65	1
	...SCENEDESMACEAE			
	....SCENEDESMUS		260	5
	CHRYSOPHYTA	YELLOW-GREEN ALGAE		
	.BACILLARIOPHYCEAE	DIATOMS		
	..CENTRALES	CENTRIC		
	...COSCINODISCACEAE			
	....CYCLOTELLA		460	9
	..PENNALES	PENNATE		
	...CYMBELLACEAE			
	....CYMBELLA		65	1
	...GOMPHONEMATACEAE			
	....GOMPHONEMA		130	2
	...NAVICULACEAE	NAVICULOID		
	....NAVICULA		520	10
	....PINNULARIA		65	1
	...NITZSCHIACEAE			
	....NITZSCHIA		2300	43
	CYANOPHYTA	BLUE-GREEN ALGAE		
	.MYXOPHYCEAE			
	..CHROOCOCCALES			
	...CHROOCOCCACEAE			
	....ANACYSTIS		1500	28
	TOTAL PHYTOPLANKTON		5400	
JULY 28	CHLOROPHYTA	GREEN ALGAE		
	.CHLOROPHYCEAE			
	..CHLOROCOCCALES			
	...MICRACTINIACEAE			
	....MICRACTINIUM			0
	CHRYSOPHYTA	YELLOW-GREEN ALGAE		
	.BACILLARIOPHYCEAE	DIATOMS		
	..CENTRALES	CENTRIC		
	...COSCINODISCACEAE			
	....CYCLOTELLA			0
	..PENNALES	PENNATE		
	...ACHNANTHACEAE			
	....ACHNANTHES		100	11
	...DIATOMACEAE			
	....OPEPHORA		100	11
	...NAVICULACEAE	NAVICULOID		
	....NAVICULA		250	28
	...NITZSCHIACEAE			
	....NITZSCHIA		400	44
	...ACHNANTHACEAE			
	....RHOIOCOSPHENIA		50	6
	EUGLENOPHYTA			
	.EUGLENOPHYCEAE			
	..EUGLENALES			
	...EUGLENACEAE			
	....EUGLENA			0
	TOTAL PHYTOPLANKTON		900	

11074000 SANTA ANA RIVER BELOW PRADO DAM, CALIF.--Continued

BIOLOGICAL ANALYSES, WATER YEAR OCTOBER 1974 TO SEPTEMBER 1975

PHYTOPLANKTON

DATE	PHYLUM .CLASS ..ORDER ...FAMILY ....GENUS .....SPECIES	COMMON NAME	COUNT (CELLS/ML)	PERCENT OF TOTAL
AUG 26	CHLOROPHYTA	GREEN ALGAE		
	.CHLOROPHYCEAE			
	..CHLOROCOCCALES			
	...HYDRODICTYACEAE			
	....PEDIASTRUM			0
	CHRYSOPHYTA	YELLOW-GREEN ALGAE		
	.BACILLARIOPHYCEAE	DIATOMS		
	..CENTRALES	CENTRIC		
	...COSCINODISCACEAE			
	....CYCLOTELLA			0
	....MELOSIRA			0
	..PENNALES	PENNATE		
	...CYMBELLACEAE			
	....EPITHEMIA			0
	...FRAGILARIACEAE			
	....SYNEDRA			0
	...GOMPHONEMATACEAE			
	....GOMPHONEMA			0
	...NAVICULACEAE	NAVICULOID		
	....GYROSIGMA			0
	....NAVICULA		330	9
	...NITZSCHIACEAE			
	....NITZSCHIA		1300	37
	...SURIRELLACEAE			
	....SURIRELLA			0
26	CYANOPHYTA	BLUE-GREEN ALGAE		
	.MYXOPHYCEAE			
	..OSCILLATORIALES	FILAMENTOUS		
	...OSCILLATORIACEAE			
	....OSCILLATORIA		1900	53
	TOTAL PHYTOPLANKTON		3500	
SEP 30	CHRYSOPHYTA	YELLOW-GREEN ALGAE		
	.BACILLARIOPHYCEAE	DIATOMS		
	..CENTRALES	CENTRIC		
	...COSCINODISCACEAE			
	....CYCLOTELLA			0
	..PENNALES	PENNATE		
	...CYMBELLACEAE			
	....EPITHEMIA			0
	...GOMPHONEMATACEAE			
	....GOMPHONEMA		58	8
	...NAVICULACEAE	NAVICULOID		
	....GYROSIGMA		120	17
	....NAVICULA		120	17
	...NITZSCHIACEAE			
	....NITZSCHIA		400	58
	TOTAL PHYTOPLANKTON		690	

QUALITATIVE AND ASSOCIATED QUANTITATIVE ANALYSES OF BIOLOGICAL DATA, WATER YEAR OCTOBER 1974 TO SEPTEMBER 1975

PERIPHYTON

Date	Length of exposure (days)	Biomass (g/m^2) Dry weight	Ash weight	Chlorophyll a (mg/m^2)	Chlorophyll b (mg/m^2)	Biomass pigment ratio	Sampling method
June 23	25	19	17	.70	.00	2800	Polyethylene strip

11074000 SANTA ANA RIVER BELOW PRADO DAM, CALIF.--Continued

WATER QUALITY DATA, WATER YEAR OCTOBER 1974 TO SEPTEMBER 1975

DATE	TIME	TOTAL IRON (FE) (UG/L)	DIS-SOLVED IRON (FE) (UG/L)	TOTAL MAN-GANESE (MN) (UG/L)	SUS-PENDED MAN-GANESE (MN) (UG/L)	DIS-SOLVED MAN-GANESE (MN) (UG/L)	TOTAL PHYTO-PLANK-TON (CELLS PER ML)	FECAL COLI-FORM (COL. PER 100 ML)	STREP-TOCOCCI (COL-ONIES PER 100 ML)	CYANIDE (CN) (MG/L)
OCT.										
25...	1230	3500	20	230	130	100	3100	120	418	.00
NOV.										
27...	1115	--	1100	--	--	--	2100	100	477	.00
DEC.										
04...	0845	--	--	--	--	--	--	--	--	--
27...	1345	--	90	170	--	--	1900	47	190	.00
JAN.										
21...	1045	2300	30	210	10	200	2400	3100	1500	.00
27...	1400	--	80	--	--	--	--	--	--	--
FEB.										
25...	1150	--	80	--	--	--	3600	250	210	.03
MAR.										
31...	0940	--	120	1100	--	--	6400	370	480	.00
APR.										
28...	1110	5600	20	390	340	50	1800	390	290	.01
MAY										
29...	1230	--	60	110	--	--	3500	530	550	.02
JUNE										
23...	1150	--	50	190	--	--	5400	340	690	.01
JULY										
28...	1300	6500	30	230	150	80	890	230	220	.00

DATE	METHY-LENE BLUE ACTIVE SUB-STANCE (MG/L)	TOTAL ARSENIC (AS) (UG/L)	SUS-PENDED ARSENIC (AS) (UG/L)	DIS-SOLVED ARSENIC (AS) (UG/L)	TOTAL BARIUM (BA) (UG/L)	TOTAL CAD-MIUM (CD) (UG/L)	SUS-PENDED CAD-MIUM (CD) (UG/L)	DIS-SOLVED CAD-MIUM (CD) (UG/L)	TOTAL CHRO-MIUM (CR) (UG/L)	SUS-PENDED CHRO-MIUM (CR) (UG/L)
OCT.										
25...	.1	3	1	2	--	<10	<10	0	0	0
NOV.										
27...	.2	4	0	4	--	<10	<9	1	0	--
DEC.										
04...	--	10	3	7	--	20	17	3	<10	--
27...	.1	4	--	--	<100	10	--	--	0	--
JAN.										
21...	.1	5	2	3	--	10	8	2	0	0
27...	--	4	0	4	--	10	9	1	20	--
FEB.										
25...	.0	6	3	3	--	<10	<9	1	0	--
MAR.										
31...	.2	9	--	--	300	10	--	--	50	--
APR.										
28...	.4	6	3	3	--	<10	<10	0	0	0
MAY										
29...	.3	6	--	--	0	<10	--	--	10	--
JUNE										
23...	.1	5	--	--	0	<10	--	--	0	--
JULY										
28...	.1	5	3	2	--	<10	<9	1	0	0

DATE	DIS-SOLVED CHRO-MIUM (CR) (UG/L)	TOTAL COBALT (CO) (UG/L)	SUS-PENDED COBALT (CO) (UG/L)	DIS-SOLVED COBALT (CO) (UG/L)	TOTAL COPPER (CU) (UG/L)	SUS-PENDED COPPER (CU) (UG/L)	DIS-SOLVED COPPER (CU) (UG/L)	TOTAL LEAD (PB) (UG/L)	SUS-PENDED LEAD (PB) (UG/L)	DIS-SOLVED LEAD (PB) (UG/L)
OCT.										
25...	0	<50	<50	0	<10	<8	2	<100	<97	3
NOV.										
27...	--	<50	<50	0	40	30	10	<100	<96	4
DEC.										
04...	--	<50	<50	0	40	30	10	<100	<95	5
27...	--	0	--	--	10	--	--	<100	--	--
JAN.										
21...	10	<50	<50	0	20	16	4	<100	<94	6
27...	--	<50	<50	0	20	16	4	<100	<98	2
FEB.										
25...	--	<50	<50	0	50	40	10	<100	<90	10
MAR.										
31...	--	<50	--	--	60	--	--	<100	--	--
APR.										
28...	10	50	50	0	20	16	4	<100	<98	2
MAY										
29...	--	<50	--	--	20	--	--	100	--	--
JUNE										
23...	--	<50	--	--	<10	--	--	<100	--	--
JULY										
28...	0	0	0	0	10	7	3	<100	<97	3

11074000 SANTA ANA RIVER BELOW PRADO DAM, CALIF.--Continued

WATER QUALITY DATA, WATER YEAR OCTOBER 1974 TO SEPTEMBER 1975

DATE	TOTAL MERCURY (HG) (UG/L)	SUS-PENDED MERCURY (HG) (UG/L)	DIS-SOLVED MERCURY (HG) (UG/L)	TOTAL SELE-NIUM (SE) (UG/L)	SUS-PENDED SELE-NIUM (SE) (UG/L)	DIS-SOLVED SELE-NIUM (SE) (UG/L)	TOTAL SILVER (AG) (UG/L)	TOTAL ZINC (ZN) (UG/L)	SUS-PENDED ZINC (ZN) (UG/L)	DIS-SOLVED ZINC (ZN) (UG/L)
OCT.										
25...	.0	.0	.0	1	1	0	--	210	100	110
NOV.										
27...	<.1	.0	<.1	--	--	--	--	60	30	30
DEC.										
04...	<.1	.0	<.1	--	--	--	--	110	50	60
27...	.1	--	--	1	--	--	<10	50	--	--
JAN.										
21...	.1	.1	.0	1	0	1	--	40	0	40
27...	.0	.0	.0	--	--	--	--	40	10	30
FEB.										
25...	.1	.0	.1	--	--	--	--	70	20	50
MAR.										
31...	.1	--	--	0	--	--	<10	180	--	--
APR.										
28...	.1	.0	.1	1	0	1	--	60	20	40
MAY										
29...	.1	--	--	1	--	--	--	120	--	--
JUNE										
23...	--	--	--	1	--	--	--	50	--	--
JULY										
28...	.1	.1	.0	0	0	0	--	50	30	20

PESTICIDE ANALYSES, WATER YEAR OCTOBER 1974 TO SEPTEMBER 1975

DATE	TIME	TOTAL ALDRIN (UG/L)	TOTAL CHLOR-DANE (UG/L)	TOTAL DDD (UG/L)	TOTAL DDE (UG/L)	TOTAL DDT (UG/L)	TOTAL DI-AZINON (UG/L)	TOTAL DI-ELDRIN (UG/L)	TOTAL ENDRIN (UG/L)	TOTAL ETHION (UG/L)	TOTAL HEPTA-CHLOR (UG/L)	TOTAL HEPTA-CHLOR EPOXIDE (UG/L)
OCT.												
25...	1230	.00	.0	.00	.00	.00	.00	.00	.00	.00	.00	.00
NOV.												
27...	1115	.00	.0	.00	.00	.00	<.01	.00	.00	.00	.00	.00
DEC.												
04...	0845	.00	.0	.00	.00	.00	<.01	.00	.00	.00	.00	.00
27...	1345	.00	.0	.00	.00	.00	.02	.00	.00	.00	.00	.00
JAN.												
21...	1045	.00	.0	.00	.00	.00	.00	.00	.00	.00	.00	.00
27...	1400	.00	.0	.00	.00	.00	.02	.00	.00	.00	.00	.00
FEB.												
25...	1150	.00	.0	<.01	.00	.00	.02	.00	.00	.00	.00	.00
APR.												
28...	1110	.00	.0	.00	.00	.00	.10	.00	.00	--	.00	.00
MAY												
29...	1230	.00	.0	.00	.00	.00	.02	.00	.00	--	.00	.00
JUNE												
23...	1150	ND	ND	ND	ND	ND	ND	ND	ND	ND	ND	ND
JULY												
28...	1300	.00	.0	.00	.00	.00	.00	.00	.00	.00	.00	.00

DATE	TOTAL LINDANE (UG/L)	TOTAL MALA-THION (UG/L)	TOTAL METHYL PARA-THION (UG/L)	TOTAL METHYL TRI-THION (UG/L)	TOTAL PARA-THION (UG/L)	TOTAL PCB (UG/L)	TOTAL TOX-APHENE (UG/L)	TOTAL TRI-THION (UG/L)	POLY-CHLO-RINATED NAPH-THA-LENES (UG/L)	TOTAL 2,4-D (UG/L)	TOTAL 2,4,5-T (UG/L)	TOTAL SILVEX (UG/L)
OCT.												
25...	.00	.00	.00	.00	.00	.0	0	.00	.00	.00	.00	.00
NOV.												
27...	.01	.00	.00	.00	.00	.0	0	.00	.00	.09	.00	.00
DEC.												
04...	.00	.00	.00	.00	.00	.0	0	.00	--	.00	.00	.00
27...	.01	.00	.00	.00	.00	.0	0	.00	.00	.07	.03	.00
JAN.												
21...	.00	.00	.00	.00	.00	.0	0	.00	.00	.00	.00	.00
27...	.02	.00	.00	.00	.00	.0	0	.00	--	.11	.00	.00
FEB.												
25...	.01	.00	.00	.00	.00	.0	0	.00	.00	.12	.00	.00
APR.												
28...	.02	.00	.00	--	.00	.0	0	--	--	.08	.01	.00
MAY												
29...	.11	.00	.00	--	.00	.0	0	--	--	.03	.00	.00
JUNE												
23...	ND	ND	ND	ND	ND	--	ND	ND	--	--	--	--
JULY												
28...	.00	.00	.00	.00	.00	.0	0	.00	.00	.00	.00	.00

ND Material specifically analyzed for but not detected.

11074000 SANTA ANA RIVER BELOW PRADO DAM, CALIF.--Continued

SPECIFIC CONDUCTANCE (MICROMHOS/CM AT 25 DEG. C), WATER YEAR OCTOBER 1974 TO SEPTEMBER 1975

	OCTOBER			NOVEMBER			DECEMBER			JANUARY		
DAY	MAX	MIN	MEAN	MAX	MIN	MEAN	MAX	MIN	MEAN	MAX	MIN	MEAN
1	619	587	606	1230	1040	1170	848	814	833	1210	1190	1200
2	637	587	618	1250	1220	1230	882	782	834	1220	1170	1200
3	639	614	629	1250	1220	1240	1020	742	818	1210	1040	1190
4	657	611	643	1250	1210	1230	1130	316	875	954	834	874
5	668	630	653	1240	1170	1200	1250	836	949	865	821	844
6	661	630	645	1260	1210	1240	1400	1300	1330	856	816	840
7	664	630	651	1260	1190	1220	1310	1280	1290	917	871	901
8	1040	637	813	1240	1190	1220	1280	1250	1260	1030	896	925
9	1130	1050	1110	1230	1170	1210	1250	1210	1230	1160	1090	1140
10	1180	1120	1160	1250	1170	1220	1220	1190	1210	1180	1160	1170
11	1180	1150	1170	1250	866	1160	1240	912	1180	1190	1170	1180
12	1080	659	723	852	798	821	912	812	847	1200	1170	1180
13	684	636	662	846	806	823	846	802	828	1190	1160	1170
14	697	652	678	834	788	814	840	784	812	1160	1020	1060
15	735	657	676	838	790	819	816	768	793	1050	1010	1040
16	749	715	731	838	812	826	806	766	786	1060	1020	1050
17	735	643	683	850	818	831	900	758	806	1090	1040	1060
18	645	634	639	856	814	832	934	904	918	1070	1050	1060
19	683	636	669	852	820	833	930	890	911	1070	1050	1060
20	696	666	683	856	825	839	934	900	915	1070	1030	1060
21	702	618	674	1010	824	856	934	902	919	1070	1050	1060
22	629	606	620	1000	824	854	958	924	940	1060	1020	1050
23	632	605	622	838	710	803	994	908	944	1070	1020	1040
24	638	611	626	828	804	815	966	894	917	1090	1000	1040
25	624	610	618	842	802	822	936	892	917	1180	1110	1160
26	635	610	627	840	800	820	920	872	899	1200	1180	1190
27	785	627	670	850	810	833	908	892	902	1190	1180	1190
28	733	525	661	852	826	836	1160	668	978	1190	1160	1180
29	779	692	747	856	816	829	1150	742	1010	1190	1170	1180
30	738	705	723	832	808	819	1220	1150	1190	1190	1170	1180
31	972	700	763	---	---	---	1210	1170	1200	1200	1160	1180
MONTH	1180	525	716	1260	710	969	1400	316	976	1220	816	1090

	FEBRUARY			MARCH			APRIL			MAY		
DAY	MAX	MIN	MEAN	MAX	MIN	MEAN	MAX	MIN	MEAN	MAX	MIN	MEAN
1	1190	1170	1180	1170	1140	1150	1170	1140	1150	1140	1130	1130
2	1190	1160	1180	1170	1140	1150	1140	1130	1140	1140	1120	1130
3	---	---	---	1180	1150	1160	1150	1120	1130	1160	1130	1140
4	---	---	---	1170	1130	1150	1150	1120	1140	1160	1150	1150
5	876	818	853	1170	1080	1150	1140	1100	1120	1170	1150	1160
6	1060	866	942	1040	380	635	1130	892	965	1150	1140	1150
7	1070	994	1040	820	698	760	1100	918	1060	1160	1140	1150
8	1150	1070	1110	910	826	867	1160	1000	1120	1170	1150	1160
9	1180	1150	1160	838	700	774	982	666	784	1180	1160	1170
10	1180	880	1070	690	642	654	1160	948	1110	1180	1150	1160
11	1070	874	963	846	688	785	1150	1120	1140	1170	1150	1160
12	1090	1020	1050	744	668	690	1150	1130	1140	1170	1140	1150
13	1150	1060	1110	762	664	700	1150	1130	1140	1150	1140	1150
14	1180	1100	1150	798	732	761	1140	1120	1130	1160	1140	1150
15	1200	1100	1160	906	768	813	1140	1110	1120	1150	1130	1140
16	1200	1140	1170	992	838	893	1150	1120	1130	1150	1140	1140
17	1170	1140	1150	966	870	916	1150	974	1080	1160	1140	1150
18	1210	1130	1160	1020	926	969	1140	1080	1110	1150	1120	1130
19	1200	1120	1150	1090	976	1020	1150	1130	1140	1130	1120	1130
20	1190	1120	1160	1100	1030	1050	1140	1130	1130	1150	1130	1140
21	1200	1140	1160	1130	1040	1070	1140	1120	1130	1140	1130	1130
22	1260	1170	1210	1120	1060	1090	1140	1110	1130	1140	1110	1120
23	1240	1190	1210	1130	1070	1090	1150	1140	1150	1150	1110	1120
24	1190	1150	1170	1130	1040	1080	1150	1130	1140	1140	1110	1130
25	1170	1140	1160	1080	992	1040	1130	1020	1090	1160	1120	1130
26	1160	1130	1140	1080	960	1020	1130	1090	1120	1140	1110	1130
27	1150	1120	1130	1120	1010	1050	1130	1120	1130	1140	1110	1120
28	1170	1120	1130	1130	1040	1090	1120	1110	1110	1130	1110	1120
29	---	---	---	1250	1120	1180	1130	1120	1120	1130	1100	1110
30	---	---	---	1270	1180	1210	1140	1130	1140	1120	1100	1110
31	---	---	---	1190	1150	1180	---	---	---	1130	1110	1120
MONTH	1260	818	1120	1270	380	972	1170	666	1110	1180	1100	1140

11074000 SANTA ANA RIVER BELOW PRADO DAM, CALIF.--Continued

SPECIFIC CONDUCTANCE (MICROMHOS/CM AT 25 DEG. C), WATER YEAR OCTOBER 1974 TO SEPTEMBER 1975

	JUNE			JULY			AUGUST			SEPTEMBER		
DAY	MAX	MIN	MEAN	MAX	MIN	MEAN	MAX	MIN	MEAN	MAX	MIN	MEAN
1	1130	1120	1120	718	672	694	713	667	691	788	728	762
2	1140	1090	1120	720	668	695	716	670	694	790	728	761
3	1140	1090	1120	712	654	687	716	660	691	805	734	770
4	1140	1110	1120	717	669	695	699	656	680	779	727	754
5	1120	1100	1110	713	659	686	708	656	682	778	714	749
6	1120	1090	1110	705	639	676	712	658	688	782	718	758
7	1130	1110	1120	702	644	678	698	644	678	801	745	774
8	1120	1090	1110	712	664	695	688	642	669	796	744	771
9	1110	1080	1090	724	674	703	692	644	673	794	739	767
10	1130	884	972	725	667	702	708	652	682	869	743	782
11	895	819	861	715	669	696	706	648	690	960	758	835
12	870	826	849	717	675	698	762	698	742	795	759	777
13	858	810	838	722	676	701	780	724	759	800	754	777
14	857	805	836	720	650	693	750	696	729	806	750	781
15	854	808	831	672	628	653	748	696	727	809	739	776
16	849	779	827	673	633	653	746	684	720	794	736	768
17	779	707	747	667	621	648	738	684	713	792	734	769
18	747	699	728	664	620	644	740	684	714	789	733	763
19	739	695	720	661	615	642	736	682	712	779	733	757
20	749	703	727	662	614	638	738	682	714	789	729	761
21	727	669	703	664	604	627	750	686	725	782	724	754
22	733	689	711	924	598	699	750	686	724	770	710	740
23	731	691	713	1100	944	1060	728	672	705	766	704	739
24	737	693	720	1080	612	753	720	666	692	779	721	751
25	741	689	723	642	616	631	716	662	700	779	725	753
26	734	670	709	663	615	644	824	716	779	796	724	771
27	933	683	760	649	595	625	819	749	788	908	750	795
28	728	688	711	628	596	612	1060	839	1000	1050	922	1020
29	724	668	697	649	609	630	1090	784	977	1050	789	934
30	715	657	687	715	617	676	845	771	813	813	765	796
31	---	---	---	714	662	692	795	751	773	---	---	---
MONTH	1140	657	870	1100	595	685	1090	642	733	1050	704	782

TEMPERATURE (DEG. C) OF WATER, WATER YEAR OCTOBER 1974 TO SEPTEMBER 1975

	OCTOBER			NOVEMBER			DECEMBER			JANUARY		
DAY	MAX	MIN	MEAN	MAX	MIN	MEAN	MAX	MIN	MEAN	MAX	MIN	MEAN
1	21.5	18.5	20.5	18.0	14.5	16.0	12.5	9.0	11.0	11.0	5.0	7.5
2	21.5	18.0	20.0	18.0	13.0	15.0	13.0	8.5	11.0	10.0	4.5	7.0
3	21.5	18.0	20.0	17.5	12.0	14.5	14.5	11.5	13.0	11.5	4.5	7.5
4	20.0	18.0	19.0	17.5	12.0	14.5	14.0	12.5	13.0	10.5	4.5	7.5
5	21.0	17.5	19.5	16.5	10.5	13.5	14.5	13.0	13.5	12.0	5.0	8.5
6	21.0	17.0	19.5	16.0	10.0	13.0	16.5	12.5	14.0	12.5	7.0	9.5
7	20.0	17.5	19.0	---	---	---	15.5	10.5	13.0	13.5	10.0	12.0
8	20.0	18.5	19.0	15.5	9.5	12.5	14.5	11.0	12.5	13.0	11.0	12.0
9	20.5	16.5	18.5	16.0	10.0	13.0	15.0	10.0	12.0	14.0	9.0	11.0
10	20.0	14.0	17.0	16.5	9.5	13.0	13.5	8.5	11.0	13.0	7.5	10.5
11	20.0	15.5	17.5	17.5	10.5	14.0	13.5	8.5	11.0	14.0	7.5	11.0
12	21.0	16.5	19.0	18.5	13.0	16.0	13.5	8.5	11.0	14.5	9.5	12.0
13	22.0	17.0	19.5	18.0	12.0	15.0	13.0	9.0	11.5	---	---	---
14	22.0	16.0	19.5	16.5	12.0	14.5	14.0	9.5	12.0	---	---	---
15	22.0	15.5	19.0	16.5	13.0	14.5	14.0	9.0	11.5	---	---	---
16	21.5	15.0	18.0	16.0	13.0	14.5	15.5	10.0	13.0	---	---	---
17	21.0	14.5	18.5	17.5	14.5	15.5	15.0	9.5	12.5	---	---	---
18	21.0	15.0	18.0	16.0	13.0	14.5	14.0	8.5	11.5	---	---	---
19	20.0	16.0	18.5	17.0	14.0	15.5	12.5	8.5	10.5	---	---	---
20	20.5	16.5	18.5	16.5	12.0	14.5	13.0	8.0	10.5	---	---	---
21	19.5	17.5	18.5	17.0	13.5	15.5	13.5	7.5	10.5	---	---	---
22	19.5	16.0	18.0	17.0	14.0	15.5	12.0	9.0	10.5	---	---	---
23	19.0	15.5	17.5	15.5	11.0	13.5	10.5	6.5	8.5	---	---	---
24	20.0	16.5	18.5	16.0	10.0	13.0	9.0	5.0	6.5	---	---	---
25	20.0	15.0	17.0	14.0	8.5	12.0	10.0	4.0	6.5	---	---	---
26	18.0	16.5	17.5	14.0	8.0	11.5	10.0	4.5	7.5	---	---	---
27	18.5	16.5	17.5	13.5	9.0	11.5	10.5	5.0	8.0	---	---	---
28	18.0	16.0	17.0	14.5	11.0	12.5	10.5	8.5	9.0	---	---	---
29	17.5	14.0	15.5	13.5	9.5	12.0	11.0	7.5	9.0	---	---	---
30	18.0	14.0	16.0	12.0	8.0	10.5	11.5	6.0	9.0	---	---	---
31	17.0	13.5	15.5	---	---	---	10.5	7.0	8.5	---	---	---
MONTH	22.0	13.5	18.5	18.5	8.0	14.0	16.5	4.0	10.5	---	---	---

11074000 SANTA ANA RIVER BELOW PRADO DAM, CALIF.--Continued

TEMPERATURE (DEG. C) OF WATER, WATER YEAR OCTOBER 1974 TO SEPTEMBER 1975

	FEBRUARY			MARCH			APRIL			MAY		
DAY	MAX	MIN	MEAN	MAX	MIN	MEAN	MAX	MIN	MEAN	MAX	MIN	MEAN
1	---	---	---	20.0	13.0	15.5	20.0	12.0	15.0	---	---	---
2	---	---	---	19.0	12.5	15.0	21.5	10.5	15.5	---	---	---
3	---	---	---	20.0	11.5	15.0	21.0	10.5	15.0	---	---	---
4	---	---	---	18.0	13.0	15.5	17.0	10.5	14.0	---	---	---
5	---	---	---	17.0	14.0	15.0	16.0	12.0	14.0	---	---	---
6	---	---	---	14.0	12.0	13.0	15.0	10.0	12.5	---	---	---
7	---	---	---	---	---	---	---	---	---	---	---	---
8	---	---	---	---	---	---	---	---	---	---	---	---
9	---	---	---	---	---	---	---	---	---	---	---	---
10	---	---	---	---	---	---	---	---	---	---	---	---
11	---	---	---	---	---	---	---	---	---	---	---	---
12	---	---	---	---	---	---	---	---	---	---	---	---
13	14.0	13.5	13.5	---	---	---	---	---	---	---	---	---
14	14.0	13.5	14.0	---	---	---	---	---	---	23.0	17.0	20.0
15	14.0	13.5	13.5	---	---	---	---	---	---	20.5	16.5	18.0
16	13.5	12.5	13.0	---	---	---	---	---	---	20.0	16.0	17.5
17	12.0	11.5	12.0	---	---	---	---	---	---	23.0	15.5	18.5
18	11.5	11.0	11.5	---	---	---	---	---	---	23.0	15.5	19.0
19	11.5	11.0	11.0	---	---	---	---	---	---	20.0	16.5	17.5
20	11.5	11.0	11.5	---	---	---	---	---	---	19.0	15.0	16.5
21	13.5	11.5	12.5	---	---	---	---	---	---	21.0	12.0	16.0
22	13.0	8.5	10.5	---	---	---	---	---	---	22.0	13.0	17.5
23	16.0	8.5	12.0	---	---	---	---	---	---	23.5	14.0	18.5
24	18.5	9.0	13.0	---	---	---	---	---	---	24.0	15.0	19.0
25	18.5	10.0	14.0	---	---	---	---	---	---	24.0	16.0	19.5
26	19.0	12.0	15.0	---	---	---	---	---	---	24.0	17.0	19.5
27	18.5	12.0	14.5	---	---	---	---	---	---	23.0	17.0	19.5
28	19.5	12.0	15.0	13.5	12.0	13.0	---	---	---	24.5	17.5	20.0
29	---	---	---	15.5	11.0	12.0	---	---	---	25.0	17.0	20.5
30	---	---	---	21.0	10.0	15.0	---	---	---	25.0	17.5	20.5
31	---	---	---	14.5	10.5	12.5	---	---	---	24.5	18.0	20.5
MONTH	---	---	---	---	---	---	---	---	---	---	---	---

	JUNE			JULY			AUGUST			SEPTEMBER		
DAY	MAX	MIN	MEAN	MAX	MIN	MEAN	MAX	MIN	MEAN	MAX	MIN	MEAN
1	24.5	17.5	20.5	23.5	17.0	20.5	23.5	18.5	21.5	21.5	17.5	20.0
2	23.0	17.0	19.5	23.5	16.5	20.5	24.0	18.5	22.0	22.0	17.0	20.0
3	20.5	17.0	18.5	23.0	17.0	20.5	24.0	19.0	22.0	22.5	18.0	20.5
4	22.5	16.5	19.0	23.5	17.5	21.0	24.5	19.5	22.5	23.0	18.5	21.0
5	23.5	16.5	19.5	24.0	18.0	21.5	25.0	20.0	23.0	23.5	19.0	21.5
6	23.0	17.5	20.0	24.5	18.0	22.0	25.0	19.5	23.0	23.0	19.0	21.5
7	23.5	16.0	19.5	24.5	18.0	22.0	25.0	20.0	23.0	23.5	20.5	22.0
8	23.0	17.5	19.5	23.5	20.0	21.5	25.0	20.0	23.0	23.0	20.5	21.5
9	24.5	16.0	19.5	25.0	20.0	23.0	25.0	20.5	23.0	22.0	20.0	21.0
10	23.5	17.5	20.0	26.0	20.5	23.5	25.0	20.5	23.5	21.5	19.5	20.5
11	24.5	17.5	20.5	26.0	20.5	23.5	24.0	20.0	22.5	20.5	18.5	19.5
12	23.5	19.0	21.0	24.5	20.0	22.5	24.0	20.5	22.0	20.5	18.0	19.5
13	23.5	18.5	20.5	23.5	19.5	21.5	23.0	19.0	21.5	22.0	19.0	20.5
14	23.5	18.0	20.5	24.0	19.5	22.0	23.0	18.5	21.0	22.5	19.5	21.0
15	23.0	18.0	20.5	24.0	19.0	21.5	22.5	18.0	20.5	22.5	18.5	21.0
16	20.0	18.0	19.0	23.5	18.0	21.0	22.5	17.5	20.5	24.0	20.5	22.5
17	20.0	17.0	18.5	23.5	19.5	21.5	22.0	17.5	20.5	24.5	20.5	23.0
18	21.5	16.5	19.0	23.5	19.5	21.5	22.5	17.5	20.5	23.5	20.5	22.0
19	19.0	16.5	18.0	24.0	20.0	22.0	22.5	18.0	20.5	23.0	18.5	21.0
20	21.5	16.0	18.5	24.5	19.0	22.0	22.0	18.0	20.5	23.0	18.5	21.0
21	22.5	16.0	19.5	24.5	19.0	22.0	22.0	18.5	20.5	23.0	18.5	21.0
22	23.0	17.0	20.5	24.0	19.5	22.0	22.5	17.5	20.5	23.5	19.0	21.5
23	22.5	18.0	20.5	25.5	19.0	22.0	23.5	17.5	21.0	22.5	17.5	20.5
24	22.0	18.0	20.0	24.5	19.0	22.0	22.5	17.0	20.5	22.5	17.0	20.0
25	23.0	16.0	20.0	25.5	19.5	22.5	22.0	16.5	20.0	22.0	17.0	20.0
26	23.5	15.5	20.0	25.0	20.0	23.0	22.5	17.5	20.0	21.5	17.0	19.5
27	23.5	16.5	20.5	25.0	20.5	23.0	21.5	16.5	19.5	21.0	17.0	19.5
28	23.0	16.5	20.5	23.5	20.5	22.0	22.5	16.0	19.5	21.5	17.0	19.0
29	23.5	17.0	20.5	24.5	20.0	22.5	22.5	16.0	19.5	20.0	17.0	18.5
30	23.5	17.0	21.0	24.0	20.0	22.0	22.5	17.0	20.0	21.5	18.0	19.5
31	---	---	---	24.0	18.5	21.5	22.0	17.0	20.0	---	---	---
MONTH	24.5	15.5	20.0	26.0	16.5	22.0	25.0	16.0	21.0	24.5	17.0	20.5

11074000 SANTA ANA RIVER BELOW PRADO DAM, CALIF.--Continued

SUSPENDED-SEDIMENT DISCHARGE (TONS/DAY), WATER YEAR OCTOBER 1974 TO SEPTEMBER 1975

	OCTOBER			NOVEMBER			DECEMBER		
DAY	MEAN DISCHARGE (CFS)	MEAN CONCEN-TRATION (MG/L)	SEDIMENT DISCHARGE (TONS/DAY)	MEAN DISCHARGE (CFS)	MEAN CONCEN-TRATION (MG/L)	SEDIMENT DISCHARGE (TONS/DAY)	MEAN DISCHARGE (CFS)	MEAN CONCEN-TRATION (MG/L)	SEDIMENT DISCHARGE (TONS/DAY)
1	132	70	25	87	95	22	140	60	23
2	133	75	27	74	95	19	150	70	28
3	139	75	28	70	85	16	172	80	37
4	143	80	31	71	80	15	536	530	978
5	145	80	31	75	70	14	798	290	625
6	143	85	33	68	60	11	177	170	81
7	142	90	35	65	55	9.7	123	120	40
8	110	95	28	63	50	8.5	106	100	29
9	57	105	16	65	45	7.9	104	90	25
10	54	110	16	63	45	7.7	108	80	23
11	55	105	16	71	70	13	118	75	24
12	137	85	31	128	120	41	191	70	36
13	142	70	27	135	90	33	190	65	33
14	145	70	27	138	65	24	187	60	30
15	140	70	26	143	50	19	186	55	28
16	145	70	27	143	50	19	187	50	25
17	154	75	31	144	55	21	167	45	20
18	149	75	30	145	55	22	127	70	24
19	156	80	34	148	60	24	129	75	26
20	160	80	35	147	60	24	126	80	27
21	174	80	38	146	60	24	128	85	29
22	218	80	47	150	60	24	136	85	31
23	216	75	44	158	60	26	131	80	28
24	211	70	40	144	60	23	129	75	26
25	211	65	37	141	55	21	120	70	23
26	209	60	34	143	55	21	117	65	21
27	215	55	32	146	55	22	124	60	20
28	259	50	35	149	55	22	151	90	37
29	294	50	40	142	60	23	231	130	81
30	245	60	40	136	60	22	133	100	36
31	215	75	44	---	---	---	113	80	24
TOTAL	5048	---	985	3498	---	598.8	5535	---	2518

	JANUARY			FEBRUARY			MARCH		
DAY	MEAN DISCHARGE (CFS)	MEAN CONCEN-TRATION (MG/L)	SEDIMENT DISCHARGE (TONS/DAY)	MEAN DISCHARGE (CFS)	MEAN CONCEN-TRATION (MG/L)	SEDIMENT DISCHARGE (TONS/DAY)	MEAN DISCHARGE (CFS)	MEAN CONCEN-TRATION (MG/L)	SEDIMENT DISCHARGE (TONS/DAY)
1	92	60	15	94	90	23	100	110	30
2	87	50	12	94	85	22	98	120	32
3	92	45	11	140	335	149	98	130	34
4	170	95	44	125	150	51	104	155	44
5	169	120	55	147	90	36	107	200	58
6	171	120	55	158	55	23	185	260	130
7	146	110	43	165	40	18	180	200	97
8	142	100	38	179	35	17	181	160	78
9	99	80	21	175	35	17	194	125	65
10	92	65	16	178	30	14	194	100	52
11	90	60	15	148	30	12	194	85	45
12	86	55	13	92	25	6.2	195	70	37
13	87	65	15	92	20	5.0	192	55	29
14	113	80	24	107	20	5.8	191	40	21
15	116	85	27	131	30	11	189	30	15
16	113	80	24	130	30	11	188	20	10
17	109	75	22	128	30	10	186	15	7.5
18	108	80	23	126	35	12	174	15	7.0
19	113	85	26	138	60	22	162	15	6.6
20	117	85	27	159	100	43	160	15	6.5
21	117	90	28	154	95	40	159	15	6.4
22	118	90	29	144	95	37	158	15	6.4
23	120	90	29	130	90	32	158	15	6.4
24	116	85	27	106	90	26	157	15	6.4
25	93	70	18	98	90	24	172	15	7.0
26	89	55	13	100	95	26	207	20	11
27	90	50	12	107	100	29	246	35	23
28	92	55	14	108	100	29	238	60	39
29	93	60	15	---	---	---	222	170	102
30	96	70	18	---	---	---	123	650	216
31	100	90	24	---	---	---	97	610	160
TOTAL	3436	---	753	3653	---	751.0	5209	---	1388.2

11074000 SANTA ANA RIVER BELOW PRADO DAM, CALIF.--Continued

SUSPENDED-SEDIMENT DISCHARGE (TONS/DAY), WATER YEAR OCTOBER 1974 TO SEPTEMBER 1975

	APRIL			MAY			JUNE		
DAY	MEAN DISCHARGE (CFS)	MEAN CONCEN-TRATION (MG/L)	SEDIMENT DISCHARGE (TONS/DAY)	MEAN DISCHARGE (CFS)	MEAN CONCEN-TRATION (MG/L)	SEDIMENT DISCHARGE (TONS/DAY)	MEAN DISCHARGE (CFS)	MEAN CONCEN-TRATION (MG/L)	SEDIMENT DISCHARGE (TONS/DAY)
1	103	520	145	90	110	27	72	100	19
2	102	450	124	91	115	28	70	95	18
3	102	360	99	87	115	27	70	90	17
4	106	300	86	85	105	24	70	100	19
5	106	280	80	85	100	23	70	110	21
6	163	260	114	80	95	21	69	135	25
7	135	250	91	79	95	20	66	150	27
8	123	240	80	78	100	21	65	155	27
9	347	430	403	77	105	22	66	160	29
10	165	330	147	76	110	23	111	190	57
11	115	280	87	75	115	23	119	180	58
12	106	240	69	75	115	23	114	175	54
13	105	210	60	75	120	24	116	165	52
14	103	190	53	75	120	24	112	160	48
15	105	180	51	76	120	25	113	155	47
16	104	170	48	76	120	25	125	150	51
17	116	165	52	75	110	22	161	145	63
18	111	160	48	75	100	20	159	145	62
19	102	160	44	74	90	18	159	145	62
20	99	155	41	74	85	17	148	145	58
21	97	155	41	74	80	16	155	145	61
22	98	155	41	74	85	17	158	145	62
23	96	135	35	74	85	17	157	145	61
24	96	105	27	74	90	18	160	150	65
25	104	95	27	73	95	19	153	150	62
26	91	100	25	71	100	19	151	155	63
27	85	110	25	71	105	20	128	155	54
28	86	110	26	69	110	20	149	155	62
29	86	105	24	69	110	20	143	155	60
30	86	110	26	69	105	20	140	155	59
31	---	---	---	72	105	20	---	---	---
TOTAL	3443	---	2219	2368	---	663	3549	---	1423

	JULY			AUGUST			SEPTEMBER		
DAY	MEAN DISCHARGE (CFS)	MEAN CONCEN-TRATION (MG/L)	SEDIMENT DISCHARGE (TONS/DAY)	MEAN DISCHARGE (CFS)	MEAN CONCEN-TRATION (MG/L)	SEDIMENT DISCHARGE (TONS/DAY)	MEAN DISCHARGE (CFS)	MEAN CONCEN-TRATION (MG/L)	SEDIMENT DISCHARGE (TONS/DAY)
1	140	155	59	133	165	59	81	205	45
2	143	155	60	133	175	63	81	200	44
3	150	150	61	128	175	60	85	190	44
4	150	150	61	123	170	56	86	180	42
5	148	150	60	130	170	60	86	155	36
6	146	150	59	131	170	60	88	150	36
7	145	150	59	130	165	58	87	145	34
8	148	150	60	127	160	55	90	140	34
9	144	150	58	132	160	57	103	140	39
10	142	150	58	139	165	62	99	135	36
11	140	150	57	134	175	63	89	135	32
12	141	150	57	109	180	53	104	130	37
13	145	160	63	108	180	52	106	130	37
14	157	180	76	120	170	55	104	130	37
15	204	190	105	122	140	46	102	125	34
16	195	180	95	122	135	44	98	125	33
17	195	155	82	123	140	46	98	130	34
18	193	145	76	122	140	46	98	130	34
19	194	145	76	126	140	48	96	135	35
20	194	145	76	125	145	49	96	140	36
21	191	145	75	125	145	49	96	140	36
22	158	145	62	128	145	50	94	140	36
23	48	140	18	132	145	52	94	145	37
24	153	135	56	126	150	51	94	145	37
25	200	135	73	111	170	51	96	145	38
26	197	140	74	81	200	44	90	145	35
27	194	150	79	81	215	47	83	160	36
28	191	160	83	45	220	27	52	210	29
29	194	150	79	56	220	33	74	210	42
30	165	155	69	78	215	45	95	205	53
31	135	160	58	83	210	47	---	---	---
TOTAL	5040	---	2084	3563	---	1588	2745	---	1118
YEAR	47087.0		16089.0						

11074000 SANTA ANA RIVER BELOW PRADO DAM, CALIF.--Continued

PARTICLE-SIZE DISTRIBUTION OF SUSPENDED SEDIMENT, WATER YEAR OCTOBER 1974 TO SEPTEMBER 1975

DATE	TIME	TEMPERATURE (DEG C)	INSTANTANEOUS DISCHARGE (CFS)	SUSPENDED SEDIMENT (MG/L)	SUSPENDED SEDIMENT DISCHARGE (T/DAY)	SUS. SED. FALL DIAM. % FINER THAN .002 MM	SUS. SED. FALL DIAM. % FINER THAN .004 MM	SUS. SED. FALL DIAM. % FINER THAN .008 MM	SUS. SED. FALL DIAM. % FINER THAN .016 MM
OCT.									
29...	1112	14.5	298	50	40	--	--	--	--
NOV.									
19...	0915	14.0	149	58	23	--	--	--	--
DEC.									
04...	1215	12.5	370	1040	1040	56	68	81	93
27...	1345	9.5	133	48	17	--	--	--	--
JAN.									
17...	1232	13.5	106	67	19	--	--	--	--
21...	1045	9.5	120	66	21	--	--	--	--
27...	1430	11.0	88	49	12	--	--	--	--
FEB.									
03...	1023	10.0	291	678	533	37	52	37	84
06...	1002	11.0	160	38	16	--	--	--	--
MAR.									
06...	0916	12.5	183	389	192	--	--	--	--
06...	1528	13.0	333	238	214	--	--	--	--
10...	0935	13.0	194	146	76	--	--	--	--
28...	1218	14.0	233	49	31	--	--	--	--
MAY									
20...	1238	15.0	68	81	15	--	--	--	--

DATE	SUS. SED. FALL DIAM. % FINER THAN .031 MM	SUS. SED. FALL DIAM. % FINER THAN .062 MM	SUS. SED. SIEVE DIAM. % FINER THAN .062 MM	SUS. SED. FALL DIAM. % FINER THAN .125 MM	SUS. SED. SIEVE DIAM. % FINER THAN .125 MM	SUS. SED. SIEVE DIAM. % FINER THAN .250 MM	SUS. SED. SIEVE DIAM. % FINER THAN .500 MM	SUS. SED. SIEVE DIAM. % FINER THAN 1.00 MM
OCT.								
29...	--	--	88	--	97	100	--	--
NOV.								
19...	--	--	97	--	100	--	--	--
DEC.								
04...	98	99	--	100	--	--	--	--
27...	--	--	97	--	100	--	--	--
JAN.								
17...	--	--	99	--	100	--	--	--
21...	--	--	98	--	99	100	--	--
27...	--	--	90	--	92	93	97	100
FEB.								
03...	94	--	99	--	100	--	--	--
06...	--	--	97	--	98	99	100	--
MAR.								
06...	--	--	99	--	100	--	--	--
06...	--	--	99	--	100	--	--	--
10...	--	--	99	--	--	100	--	--
28...	--	--	95	--	98	100	--	--
MAY								
20...	--	--	100	--	--	--	--	--

11075600 SANTA ANA RIVER AT IMPERIAL HIGHWAY, NEAR ANAHEIM, CALIF.

LOCATION.--Lat 33°51'23", long 117°47'23", in Canon De Santa Ana, Orange County, on right bank 500 ft (152 m) upstream from State Highway 91, and 0.4 mi (0.6 km) south of Orangethorpe Avenue.

DRAINAGE AREA.--1,544 mi^2 (3,999 km^2), excludes 768 mi^2 (1,989 km^2) above Lake Elsinore.

PERIOD OF RECORD.--October 1973 to current year.

GAGE.--Water-stage recorder. Altitude of gage is 282 ft (86 m), from topographic map. Prior to June 4, 1975, at datum 3.00 ft (0.914 m) higher.

EXTREMES.--Current year: Maximum discharge, 918 ft^3/s (26.0 m^3/s) Dec. 4 (gage height, 5.22 ft or 1.591 m); minimum daily, 36 ft^3/s (1.02 m^3/s) Aug. 29.
Period of record: Maximum discharge, 2,170 ft^3/s (61.5 m^3/s) Jan. 8, 1974 (gage height, 3.02 ft or 0.920 m); maximum gage height, 5.22 ft (1.591 m) Dec. 4, 1974; minimum daily discharge, 36 ft^3/s (1.02 m^3/s) Aug. 29, 1975.

REMARKS.--Records fair. Natural flow affected by ground-water withdrawals, diversions, importation from Metropolitan Water District and California Aqueduct, municipal use, return flow from irrigation, Prado flood-control reservoir, capacity, 201,200 acre-ft (248 hm^3) since 1940, and Big Bear Lake (see sta 11049000). See schematic diagram of Santa Ana River basin.

COOPERATION.--Thirty-one discharge measurements furnished by Orange County Flood Control District.

DISCHARGE, IN CUBIC FEET PER SECOND, WATER YEAR OCTOBER 1974 TO SEPTEMBER 1975
MEAN VALUES

DAY	OCT	NOV	DEC	JAN	FEB	MAR	APR	MAY	JUN	JUL	AUG	SEP
1	122	104	127	96	88	90	112	90	83	150	116	69
2	125	60	127	83	87	90	110	92	87	147	114	69
3	125	55	157	83	159	90	110	87	87	127	112	76
4	130	55	448	156	127	100	112	83	107	132	108	79
5	132	60	640	162	132	105	117	83	103	132	112	79
6	130	55	265	160	145	176	149	83	109	127	114	81
7	130	50	122	147	145	165	140	69	76	148	112	78
8	116	53	112	140	160	228	134	69	67	156	108	78
9	50	48	98	100	179	180	253	69	89	158	110	88
10	50	48	112	90	155	198	187	69	119	120	114	92
11	50	50	115	94	140	190	125	69	130	138	112	76
12	108	100	175	90	87	185	110	69	128	122	100	94
13	137	125	174	94	83	187	108	69	127	127	98	96
14	140	127	172	104	95	205	102	69	96	182	108	94
15	137	127	172	118	112	192	106	69	98	177	108	90
16	119	130	170	116	114	190	108	76	122	172	110	88
17	132	130	130	112	112	182	128	78	142	177	110	90
18	130	137	118	106	110	172	118	76	147	175	110	88
19	137	137	122	106	114	160	106	76	152	175	112	87
20	145	135	125	108	137	160	104	85	155	172	114	85
21	145	140	132	108	132	157	96	87	160	172	112	85
22	160	147	142	104	127	168	96	85	160	157	114	85
23	165	147	135	98	118	155	96	85	157	40	120	83
24	162	140	130	100	100	155	96	83	157	106	116	83
25	162	132	125	96	92	165	106	82	157	167	104	85
26	162	132	116	96	92	192	96	81	157	172	72	83
27	165	140	110	96	98	239	92	81	136	170	72	78
28	181	140	135	96	98	235	92	81	150	167	42	44
29	227	132	202	94	---	228	87	81	137	170	36	51
30	195	125	130	88	---	150	85	89	152	150	67	83
31	187	---	112	90	---	108	---	79	---	120	71	---
TOTAL	4256	3161	5150	3331	3338	5197	3481	2444	3747	4605	3128	2437
MEAN	137	105	166	107	119	168	116	78.8	125	149	101	81.2
MAX	227	147	640	162	179	239	253	92	160	182	120	96
MIN	50	48	98	83	83	90	85	69	67	40	36	44
AC-FT	8440	6270	10220	6610	6620	10310	6900	4850	7430	9130	6200	4830

CAL YR 1974 TOTAL 69041 MEAN 189 MAX 1290 MIN 48 AC-FT 136900
WTR YR 1975 TOTAL 44275 MEAN 121 MAX 640 MIN 36 AC-FT 87820

11075600 SANTA ANA RIVER AT IMPERIAL HIGHWAY, NEAR ANAHEIM, CALIF.--Continued

PERIOD OF RECORD.--Water temperatures: October 1972 to current year.
Sediment records: October 1972 to current year.

EXTREMES.--Current year:
Sediment concentrations: Maximum daily, 2,440 mg/l Mar. 8; minimum daily, 25 mg/l Feb. 20.
Sediment discharge: Maximum daily, 2,350 tons (2,130 tonnes) Dec. 5; minimum daily, 7.4 tons (6.7 tonnes) Aug. 28.
Period of record:
Sediment concentrations: Maximum daily, 6,870 mg/l Feb. 11, 1973; minimum daily, 20 mg/l on several days in 1973.
Sediment discharge: Maximum daily, 22,400 tons (20,300 tonnes) Jan. 8, 1974; minimum daily, 0.01 ton (0.01 tonne) on several days in 1973.

TEMPERATURE (DEG. C) OF WATER, WATER YEAR OCTOBER 1974 TO SEPTEMBER 1975
ONCE-DAILY

DAY	OCT	NOV	DEC	JAN	FEB	MAR	APR	MAY	JUN	JUL	AUG	SEP
1	---	---	---	---	---	---	15.5	---	---	21.0	---	---
2	---	---	---	10.5	---	---	---	---	24.0	---	---	---
3	---	---	---	---	10.5	---	---	---	---	23.0	---	21.0
4	19.5	---	---	---	---	16.5	---	---	18.0	---	23.0	22.5
5	---	16.0	12.5	---	---	---	---	---	---	---	---	---
6	---	---	14.0	---	11.5	14.0	---	17.0	---	---	---	---
7	---	---	---	---	---	---	---	---	---	---	---	---
8	---	---	---	---	---	---	13.5	20.0	---	---	---	---
9	---	---	---	13.0	13.5	---	13.0	---	19.5	---	---	20.5
10	18.5	---	---	---	13.0	---	---	---	18.0	26.0	---	---
11	16.5	---	---	---	---	12.5	---	---	---	---	---	19.5
12	---	16.5	---	---	12.0	---	---	---	---	---	---	---
13	---	---	12.5	---	---	13.0	---	---	---	---	---	---
14	---	14.5	---	---	---	14.0	---	---	---	---	22.0	---
15	---	---	---	11.0	---	---	14.5	17.0	---	---	---	---
16	---	---	---	---	---	---	---	---	18.0	---	---	---
17	18.0	---	---	15.0	---	---	13.5	---	17.5	24.5	---	21.5
18	---	---	11.0	---	---	---	---	---	---	22.0	20.5	---
19	---	---	10.5	---	---	15.0	---	---	---	---	---	---
20	---	---	---	---	14.0	---	---	---	---	---	---	---
21	---	14.5	---	---	12.5	---	---	16.5	---	---	20.5	---
22	17.0	---	---	8.5	---	---	---	---	---	---	---	---
23	---	---	9.5	---	---	---	17.5	---	22.0	---	---	---
24	---	---	---	13.5	---	20.0	---	---	---	23.5	---	---
25	---	11.5	---	---	16.5	---	---	---	---	---	---	---
26	---	---	---	---	---	---	---	---	19.0	---	---	---
27	---	---	---	---	---	---	---	---	---	---	---	---
28	---	---	---	---	---	11.5	17.5	---	---	---	21.5	---
29	14.5	12.0	10.0	---	---	---	20.0	20.0	---	---	23.0	---
30	---	---	---	8.5	---	---	---	---	---	---	---	---
31	---	---	6.0	---	---	---	---	---	---	20.5	---	---
MONTH	---	---	---	---	---	---	---	---	---	---	---	---

11075600 SANTA ANA RIVER AT IMPERIAL HIGHWAY, NEAR ANAHEIM, CALIF.--Continued

SUSPENDED-SEDIMENT DISCHARGE (TONS/DAY), WATER YEAR OCTOBER 1974 TO SEPTEMBER 1975

	OCTOBER			NOVEMBER			DECEMBER		
DAY	MEAN DISCHARGE (CFS)	MEAN CONCEN-TRATION (MG/L)	SEDIMENT DISCHARGE (TONS/DAY)	MEAN DISCHARGE (CFS)	MEAN CONCEN-TRATION (MG/L)	SEDIMENT DISCHARGE (TONS/DAY)	MEAN DISCHARGE (CFS)	MEAN CONCEN-TRATION (MG/L)	SEDIMENT DISCHARGE (TONS/DAY)
1	122	55	18	104	65	18	127	55	19
2	125	55	19	60	65	11	127	60	21
3	125	55	19	55	70	10	157	80	34
4	130	55	19	55	70	10	448	1400	2270
5	132	55	20	60	1710	277	640	1360	2350
6	130	50	18	55	360	53	265	625	562
7	130	50	18	50	100	13	122	300	99
8	116	50	16	53	75	11	112	170	51
9	50	70	9.5	48	70	9.1	98	100	26
10	50	70	9.5	48	70	9.1	112	120	36
11	50	65	8.8	50	75	10	115	100	31
12	108	165	54	100	180	57	175	190	89
13	137	140	52	125	140	47	174	160	75
14	140	110	42	127	105	36	172	125	58
15	137	95	35	127	80	27	172	105	49
16	119	75	24	130	65	23	170	95	44
17	132	70	25	130	55	19	130	90	32
18	130	65	23	137	55	20	118	90	29
19	137	65	24	137	60	22	122	110	36
20	145	70	27	135	60	22	125	100	34
21	145	70	27	140	55	21	132	85	30
22	160	80	35	147	55	22	142	80	31
23	165	80	36	147	55	22	135	70	26
24	162	80	35	140	60	23	130	70	25
25	162	80	35	132	60	21	125	70	24
26	162	80	35	132	60	21	116	70	22
27	165	70	31	140	55	21	110	70	21
28	181	85	43	140	55	21	135	175	76
29	227	95	59	132	55	20	202	320	180
30	195	80	42	125	55	19	130	155	54
31	187	80	40	---	---	---	112	80	24
TOTAL	4256	---	898.8	3161	---	915.2	5150	---	6458

	JANUARY			FEBRUARY			MARCH		
DAY	MEAN DISCHARGE (CFS)	MEAN CONCEN-TRATION (MG/L)	SEDIMENT DISCHARGE (TONS/DAY)	MEAN DISCHARGE (CFS)	MEAN CONCEN-TRATION (MG/L)	SEDIMENT DISCHARGE (TONS/DAY)	MEAN DISCHARGE (CFS)	MEAN CONCEN-TRATION (MG/L)	SEDIMENT DISCHARGE (TONS/DAY)
1	96	80	21	88	90	21	90	90	22
2	83	80	18	87	90	21	90	100	24
3	83	85	19	159	1140	611	90	120	29
4	156	135	59	127	170	58	100	150	40
5	162	110	48	132	125	45	105	210	64
6	160	105	45	145	110	43	176	775	423
7	147	100	40	145	95	37	165	600	267
8	140	105	40	160	80	35	228	2440	1770
9	100	100	27	179	115	55	180	550	267
10	90	105	26	155	90	38	198	500	283
11	94	105	27	140	80	30	190	320	164
12	90	105	26	87	45	11	185	130	65
13	94	105	27	83	50	11	187	210	123
14	104	110	31	95	50	13	205	410	247
15	118	115	37	112	50	15	192	80	41
16	116	115	36	114	35	11	190	60	31
17	112	110	33	112	35	11	182	50	25
18	106	105	30	110	35	10	172	50	23
19	106	105	30	114	30	9.2	160	40	17
20	108	110	32	137	25	9.2	160	40	17
21	108	110	32	132	35	12	157	40	17
22	104	110	31	127	30	10	168	105	49
23	98	105	28	118	30	9.6	155	90	38
24	100	90	24	100	30	8.1	155	85	36
25	96	90	23	92	35	8.7	165	100	45
26	96	85	22	92	35	8.7	192	110	60
27	96	90	23	98	60	16	239	100	65
28	96	90	23	98	70	19	235	95	60
29	94	90	23	---	---	---	228	85	52
30	88	90	21	---	---	---	150	65	26
31	90	90	22	---	---	---	108	70	20
TOTAL	3331	---	924	3338	---	1186.5	5197	---	4410

11075600 SANTA ANA RIVER AT IMPERIAL HIGHWAY, NEAR ANAHEIM, CALIF.--Continued

SUSPENDED-SEDIMENT DISCHARGE (TONS/DAY), WATER YEAR OCTOBER 1974 TO SEPTEMBER 1975

	APRIL			MAY			JUNE		
DAY	MEAN DISCHARGE (CFS)	MEAN CONCEN-TRATION (MG/L)	SEDIMENT DISCHARGE (TONS/DAY)	MEAN DISCHARGE (CFS)	MEAN CONCEN-TRATION (MG/L)	SEDIMENT DISCHARGE (TONS/DAY)	MEAN DISCHARGE (CFS)	MEAN CONCEN-TRATION (MG/L)	SEDIMENT DISCHARGE (TONS/DAY)
1	112	305	92	90	190	46	83	105	24
2	110	320	95	92	195	48	87	120	29
3	110	260	77	87	190	45	87	120	29
4	112	215	65	83	190	43	107	220	70
5	117	200	67	83	185	41	103	205	61
6	149	285	115	83	185	41	109	200	61
7	140	265	100	69	190	35	76	130	27
8	134	230	85	69	205	38	67	120	22
9	253	420	294	69	195	36	89	305	91
10	187	410	207	69	160	30	119	480	186
11	125	325	110	69	140	26	130	450	187
12	110	290	86	69	125	23	128	405	163
13	108	270	79	69	150	28	127	380	150
14	102	260	72	69	170	32	96	170	44
15	106	240	69	69	185	34	98	170	45
16	108	200	58	76	190	39	122	230	85
17	128	270	99	78	190	40	142	300	115
18	118	275	88	76	190	39	147	250	99
19	106	240	69	76	190	39	152	210	86
20	104	220	62	85	190	44	155	180	75
21	96	200	52	87	200	47	160	200	86
22	96	190	49	85	175	40	160	220	95
23	96	155	40	85	160	37	157	210	89
24	96	145	38	83	145	32	157	200	85
25	106	205	59	82	130	29	157	180	76
26	96	220	57	81	110	24	157	180	76
27	92	200	50	81	85	19	136	180	66
28	92	190	47	81	60	13	150	170	69
29	87	185	43	81	50	11	137	130	48
30	85	190	44	89	115	29	152	155	68
31	---	---	---	79	110	23	---	---	---
TOTAL	3481	---	2468	2444	---	1051	3747	---	2407

	JULY			AUGUST			SEPTEMBER		
DAY	MEAN DISCHARGE (CFS)	MEAN CONCEN-TRATION (MG/L)	SEDIMENT DISCHARGE (TONS/DAY)	MEAN DISCHARGE (CFS)	MEAN CONCEN-TRATION (MG/L)	SEDIMENT DISCHARGE (TONS/DAY)	MEAN DISCHARGE (CFS)	MEAN CONCEN-TRATION (MG/L)	SEDIMENT DISCHARGE (TONS/DAY)
1	150	145	61	116	150	47	69	85	16
2	147	175	78	114	155	48	69	85	16
3	127	110	38	112	150	45	76	80	16
4	132	110	39	108	145	42	79	80	17
5	132	120	43	112	145	44	79	75	16
6	127	110	38	114	145	45	81	80	17
7	148	165	69	112	145	44	78	75	16
8	156	180	79	108	140	41	78	80	17
9	158	190	88	110	145	43	88	90	21
10	120	125	40	114	150	46	92	95	24
11	138	145	58	112	145	44	76	95	19
12	122	110	36	100	130	35	94	100	25
13	127	110	38	98	115	30	96	100	26
14	182	110	54	108	110	32	94	100	25
15	177	140	67	108	115	34	90	95	23
16	172	120	56	110	120	36	88	90	21
17	177	120	57	110	125	37	90	95	23
18	175	110	52	110	130	39	88	95	23
19	175	110	52	112	130	39	87	90	21
20	172	120	56	114	120	37	85	90	21
21	172	115	53	112	100	30	85	90	21
22	157	100	42	114	105	32	85	95	22
23	40	70	7.6	120	115	37	83	90	20
24	106	240	94	116	110	34	83	90	20
25	167	210	95	104	100	28	85	95	22
26	172	135	63	72	70	14	83	90	20
27	170	125	57	72	70	14	78	80	17
28	167	120	54	42	65	7.4	44	65	7.7
29	170	120	55	36	80	7.8	51	90	12
30	150	125	51	67	95	17	83	100	22
31	120	135	44	71	95	18	---	---	---
TOTAL	4605	---	1714.6	3128	---	1047.2	2437	---	586.7
YEAR	44275.0		24067.0						

11075600 SANTA ANA RIVER AT IMPERIAL HIGHWAY, NEAR ANAHEIM, CALIF.--Continued

SUMMARY OF WATER AND SEDIMENT DISCHARGE, WATER YEAR OCTOBER 1974 TO SEPTEMBER 1975

MONTH	WATER DISCHARGE CFS-DAYS	SUSPENDED SEDIMENT DISCHARGE TONS	BEDLOAD DISCHARGE TONS	TOTAL SEDIMENT DISCHARGE TONS
OCTOBER 1974	4256.00	898.80	2770	3670
NOVEMBER ...	3161.00	915.20	1620	2540
DECEMBER ...	5150.00	6458.00	5100	11600
JANUARY 1975	3331.00	924.00	1610	2540
FEBRUARY ...	3338.00	1186.50	1820	3000
MARCH	5197.00	4410.00	4110	8520
APRIL	3481.00	2468.00	1890	4360
MAY	2444.00	1051.00	809	1860
JUNE	3747.00	2407.00	2160	4560
JULY	4605.00	1714.60	3140	4850
AUGUST	3128.00	1047.20	1420	2460
SEPTEMBER ..	2437.00	586.70	846	1430
TOTAL	44275.00	24067.00	27295	51390

PARTICLE-SIZE DISTRIBUTION OF SUSPENDED SEDIMENT, WATER YEAR OCTOBER 1974 TO SEPTEMBER 1975

DATE	TIME	TEMPERATURE (DEG C)	INSTANTANEOUS DISCHARGE (CFS)	SUSPENDED SEDIMENT (MG/L)	SUSPENDED SEDIMENT DISCHARGE (T/DAY)	SUS. SED. FALL DIAM. % FINER THAN .002 MM	SUS. SED. FALL DIAM. % FINER THAN .004 MM	SUS. SED. FALL DIAM. % FINER THAN .008 MM	SUS. SED. FALL DIAM. % FINER THAN .016 MM	SUS. SED. FALL DIAM. % FINER THAN .031 MM	SUS. SED. FALL DIAM. % FINER THAN .062 MM
NOV.											
05...	1300	16.0	60	2940	476	19	28	37	52	69	87
DEC.											
05...	1115	12.0	661	1420	2530	23	30	33	38	43	49
29...	1215	10.0	228	385	237	34	43	51	60	67	--
FEB.											
03...	1300	10.5	232	2090	1310	43	55	69	81	89	--
MAR.											
24...	1350	20.0	157	86	36	--	--	--	--	--	--
APR.											
09...	1230	13.0	264	439	313	39	48	59	67	73	--
JUNE											
09...	1035	19.5	142	461	177	40	54	70	86	96	--
10...	1000	18.0	162	1000	437	35	53	69	84	94	--
JULY											
01...	1615	21.0	225	167	101	--	--	--	--	--	--
24...	1255	23.5	145	427	167	41	55	74	91	98	--
AUG.											
14...	1200	22.0	114	112	34	--	--	--	--	--	--
28...	1240	21.5	41	68	7.5	--	--	--	--	--	--
29...	1245	23.0	32	81	7.0	--	--	--	--	--	--
SEP.											
03...	1000	21.0	78	82	17	--	--	--	--	--	--
09...	0930	20.5	90	89	22	--	--	--	--	--	--

11075600 SANTA ANA RIVER AT IMPERIAL HIGHWAY, NEAR ANAHEIM, CALIF.--Continued

PARTICLE-SIZE DISTRIBUTION OF SUSPENDED SEDIMENT, WATER YEAR OCTOBER 1974 TO SEPTEMBER 1975

DATE	SUS. SED. SIEVE DIAM. % FINER THAN .062 MM	SUS. SED. FALL DIAM. % FINER THAN .125 MM	SUS. SED. SIEVE DIAM. % FINER THAN .125 MM	SUS. SED. FALL DIAM. % FINER THAN .250 MM	SUS. SED. SIEVE DIAM. % FINER THAN .250 MM	SUS. SED. FALL DIAM. % FINER THAN .500 MM	SUS. SED. SIEVE DIAM. % FINER THAN .500 MM	SUS. SED. FALL DIAM. % FINER THAN 1.00 MM	SUS. SED. SIEVE DIAM. % FINER THAN 1.00 MM	SUS. SED. SIEVE DIAM. % FINER THAN 2.00 MM
NOV.										
05...	--	96	--	99	--	100	--	--	--	--
DEC.										
05...	--	58	--	85	--	98	--	100	--	--
29...	70	--	81	--	95	--	99	--	100	--
FEB.										
03...	91	--	94	--	96	--	98	--	99	100
MAR.										
24...	79	--	86	--	91	--	98	--	100	--
APR.										
09...	77	--	82	--	92	--	99	--	100	--
JUNE										
09...	99	--	100	--	--	--	--	--	--	--
10...	98	--	99	--	100	--	--	--	--	--
JULY										
01...	91	--	94	--	96	--	100	--	--	--
24...	99	--	99	--	100	--	--	--	--	--
AUG.										
14...	99	--	100	--	--	--	--	--	--	--
28...	84	--	89	--	100	--	--	--	--	--
29...	92	--	96	--	100	--	--	--	--	--
SEP.										
03...	97	--	100	--	--	--	--	--	--	--
09...	85	--	85	--	86	--	86	--	88	100

11075620 SANTA ANA RIVER SPREADING DIVERSION BELOW IMPERIAL HIGHWAY, NEAR ANAHEIM, CALIF.

LOCATION.--Lat 33°57'23", long 117°48'00", in Canon De Santa Ana, Orange County, 0.1 mi (0.2 km) south of La Palma Avenue, and 0.6 mi (1.0 km) west of Imperial Highway.

PERIOD OF RECORD.--Chemical analyses: November 1974 to September 1975.
Specific conductance: July 1974 to current year.

EXTREMES.--Current year:
Specific conductance: Maximum recorded, 1,390 micromhos May 9; minimum recorded, 238 micromhos Dec. 4.
Period of record:
Specific conductance: Maximum recorded, 1,380 micromhos May 10, 1975; minimum recorded, 238 micromhos Dec. 4, 1974.

REMARKS.--Records of discharge furnished by Orange County Water District. Specific conductance probe silted or not in total contact Oct. 1-15, Nov. 3-25, Dec. 11 to Apr 22, June 17 to July 2, July 10, 23.

WATER QUALITY DATA, WATER YEAR OCTOBER 1974 TO SEPTEMBER 1975

DATE	TIME	INSTANTANEOUS DISCHARGE (CFS)	DISSOLVED SOLIDS (RESIDUE AT 180 C) (MG/L)	SPECIFIC CONDUCTANCE (MICROMHOS)	TEMPERATURE (DEG C)
NOV.					
05...	1300	49	732	1180	16.0
12...	1530	.60	516	847	16.5
22...	1000	.76	500	819	14.2
25...	1000	.60	490	814	11.4
DEC.					
05...	0940	41	536	856	12.4
10...	1300	56	760	1225	12.2
18...	0915	1.2	517	843	9.8
23...	1230	.60	591	948	8.9
31...	1100	1.1	761	1215	6.0
JAN.					
09...	1145	2.6	687	1120	13.5
15...	1000	3.6	639	1050	10.5
22...	0900	1.8	656	1070	8.6
30...	1115	.68	749	1200	8.4
FEB.					
03...	1200	19	451	725	12.3
12...	0900	9.6	668	1060	12.2
18...	1130	8.0	700	1140	13.5
MAR.					
04...	1000	5.3	726	1200	14.6
13...	1000	.40	461	740	13.4
19...	1100	.34	601	990	15.0
24...	1400	10	693	1090	20.0
APR.					
01...	1000	5.8	723	1160	13.5
08...	1400	9.0	713	1160	13.5
17...	1100	2.6	720	1150	16.0
23...	1500	100	716	1150	18.0
28...	1000	90	710	1140	15.8
MAY					
07...	1000	64	740	1170	16.2
15...	0915	52	718	1170	17.5
21...	1100	52	738	1160	16.5
29...	0900	47	718	1140	19.5
JUNE					
04...	1100	60	697	1120	18.0
10...	0900	33	695	1110	18.6
JULY					
18...	0700	164	370	620	21.3
AUG.					
04...	0930	67	395	670	22.1
18...	1300	67	436	710	23.3
29...	1300	27	659	1010	24.3
SEP.					
09...	0900	55	462	770	20.2

11075620 SANTA ANA RIVER SPREADING DIVERSION BELOW IMPERIAL HIGHWAY, NEAR ANAHEIM, CALIF.--Continued

SPECIFIC CONDUCTANCE (MICROMHOS/CM AT 25 DEG. C), JULY TO SEPTEMBER 1974

	JUNE			JULY			AUGUST			SEPTEMBER		
DAY	MAX	MIN	MEAN	MAX	MIN	MEAN	MAX	MIN	MEAN	MAX	MIN	MEAN
1				---	---	---	570	542	551	571	526	533
2				---	---	---	563	539	547	615	578	603
3				---	---	---	563	539	548	---	---	---
4				---	---	---	573	542	553	---	---	---
5				---	---	---	563	539	549	---	---	---
6				---	---	---	560	535	544	---	---	---
7				---	---	---	560	535	547	---	---	---
8				---	---	---	567	532	549	---	---	---
9				---	---	---	570	542	555	---	---	---
10				---	---	---	568	543	554	---	---	---
11				---	---	---	562	537	547	---	---	---
12				---	---	---	552	531	541	718	611	678
13				---	---	---	560	529	544	706	636	671
14				---	---	---	563	532	546	718	678	693
15				---	---	---	560	532	544	722	684	702
16				---	---	---	553	532	542	710	666	690
17				---	---	---	550	525	541	---	---	---
18				---	---	---	666	522	543	---	---	---
19				---	---	---	---	---	---	---	---	---
20				---	---	---	---	---	---	---	---	---
21				---	---	---	---	---	---	---	---	---
22				---	---	---	---	---	---	---	---	---
23				---	---	---	563	542	551	---	---	---
24				---	---	---	565	537	551	---	---	---
25				---	---	---	563	546	554	---	---	---
26				---	---	---	555	537	546	---	---	---
27				---	---	---	567	536	551	---	---	---
28				---	---	---	568	541	553	---	---	---
29				---	---	---	557	540	549	---	---	---
30				---	---	---	557	529	543	---	---	---
31				576	553	567	550	526	539	---	---	---
MONTH				---	---	---	666	522	547	---	---	---

SPECIFIC CONDUCTANCE (MICROMHOS/CM AT 25 DEG. C), WATER YEAR OCTOBER 1974 TO SEPTEMBER 1975

	OCTOBER			NOVEMBER			DECEMBER			JANUARY		
DAY	MAX	MIN	MEAN	MAX	MIN	MEAN	MAX	MIN	MEAN	MAX	MIN	MEAN
1	---	---	---	1090	786	975	898	866	882			
2	---	---	---	1110	1050	1090	894	854	885			
3	---	---	---	---	---	---	822	727	773			
4	---	---	---	---	---	---	906	238	606			
5	---	---	---	---	---	---	1000	830	897			
6	---	---	---	---	---	---	1320	1020	1260			
7	---	---	---	---	---	---	1330	1290	1310			
8	---	---	---	---	---	---	1320	1270	1300			
9	---	---	---	---	---	---	1300	1230	1260			
10	---	---	---	---	---	---	1260	1220	1240			
11	---	---	---	---	---	---	---	---	---			
12	---	---	---	---	---	---	---	---	---			
13	---	---	---	---	---	---	---	---	---			
14	---	---	---	---	---	---	---	---	---			
15	---	---	---	---	---	---	---	---	---			
16	795	750	768	---	---	---	---	---	---			
17	733	664	696	---	---	---	---	---	---			
18	664	626	643	---	---	---	---	---	---			
19	674	631	651	---	---	---	---	---	---			
20	681	659	668	---	---	---	---	---	---			
21	687	660	673	---	---	---	---	---	---			
22	651	633	640	---	---	---	---	---	---			
23	646	621	636	---	---	---	---	---	---			
24	640	626	634	---	---	---	---	---	---			
25	641	622	629	---	---	---	---	---	---			
26	648	619	636	866	814	852	---	---	---			
27	657	642	649	882	842	859	---	---	---			
28	742	608	695	874	862	867	---	---	---			
29	766	572	738	890	866	877	---	---	---			
30	734	706	722	886	866	876	---	---	---			
31	754	700	715	---	---	---	---	---	---			
MONTH	---	---	---	---	---	---	---	---	---			

11075620 SANTA ANA RIVER SPREADING DIVERSION BELOW IMPERIAL HIGHWAY, NEAR ANAHEIM, CALIF.--Continued

SPECIFIC CONDUCTANCE (MICROMHOS/CM AT 25 DEG. C), WATER YEAR OCTOBER 1974 TO SEPTEMBER 1975

	FEBRUARY			MARCH			APRIL			MAY		
DAY	MAX	MIN	MEAN	MAX	MIN	MEAN	MAX	MIN	MEAN	MAX	MIN	MEAN
1	---	---	---	1200	1060	1150	---	---	---	1200	1100	1140
2	---	---	---	1210	1060	1150	---	---	---	1300	1060	1180
3	---	---	---	1210	1070	1170	---	---	---	1310	1170	1230
4	---	---	---	---	---	---	---	---	---	1300	1160	1220
5	---	---	---	---	---	---	---	---	---	1280	1110	1190
6	1100	974	1020	---	---	---	---	---	---	1290	1140	1210
7	1190	1090	1140	---	---	---	---	---	---	1300	1160	1210
8	1230	1170	1190	---	---	---	---	---	---	1320	1140	1220
9	1230	900	1140	---	---	---	---	---	---	1390	1190	1260
10	1220	1060	1150	---	---	---	---	---	---	1380	1180	1270
11	1090	884	973	---	---	---	---	---	---	1350	1180	1250
12	1100	1020	1060	---	---	---	---	---	---	1340	1190	1250
13	1140	1060	1100	---	---	---	---	---	---	1320	1200	1240
14	1190	1130	1160	---	---	---	---	---	---	1280	1180	1220
15	1190	1070	1120	---	---	---	---	---	---	1230	1150	1190
16	1200	1120	1150	---	---	---	---	---	---	1190	1160	1170
17	1190	1100	1150	---	---	---	---	---	---	1320	1170	1230
18	1260	1130	1160	---	---	---	---	---	---	1310	1200	1240
19	1260	1110	1190	---	---	---	---	---	---	1210	1160	1190
20	1220	1130	1170	---	---	---	---	---	---	1210	1140	1170
21	1210	1150	1190	---	---	---	---	---	---	1240	1120	1170
22	1240	1160	1200	---	---	---	---	---	---	1250	1100	1160
23	1310	1190	1250	---	---	---	1160	1030	1110	1250	1100	1160
24	1290	1140	1220	---	---	---	1170	1080	1120	1250	1110	1170
25	1250	1120	1200	---	---	---	1230	1070	1140	1300	1150	1210
26	1230	1090	1170	---	---	---	1210	1000	1090	1280	1180	1210
27	1210	1060	1150	---	---	---	1260	910	1120	1200	1140	1170
28	1180	1050	1140	---	---	---	1280	978	1160	1240	1120	1170
29	---	---	---	---	---	---	1320	1060	1200	1240	1130	1170
30	---	---	---	---	---	---	1330	1110	1170	1260	1110	1180
31	---	---	---	---	---	---	---	---	---	1260	1160	1200
MONTH	1310	884	1150	---	---	---	---	---	---	1390	1060	1200

	JUNE			JULY			AUGUST			SEPTEMBER		
DAY	MAX	MIN	MEAN	MAX	MIN	MEAN	MAX	MIN	MEAN	MAX	MIN	MEAN
1	1270	1180	1210	---	---	---	708	670	692	772	726	751
2	1260	1170	1200	---	---	---	711	671	694	771	719	747
3	1190	1120	1160	700	627	668	713	675	696	782	728	758
4	1210	1120	1140	732	612	670	708	668	691	776	728	756
5	1240	1110	1160	748	636	688	709	663	689	775	727	753
6	1220	1110	1160	748	633	687	709	665	692	790	726	760
7	1250	1080	1140	875	633	741	702	672	690	801	751	777
8	1230	1110	1160	887	657	753	701	659	684	803	751	779
9	1250	1090	1150	938	668	800	706	664	687	802	734	772
10	1190	978	1120	---	---	---	714	668	693	772	734	755
11	1080	918	984	870	681	792	713	671	693	920	764	822
12	1050	868	945	738	702	726	774	706	739	776	744	678
13	1040	854	932	731	691	715	788	734	764	780	742	762
14	964	836	891	723	685	707	785	729	755	780	734	758
15	966	834	898	691	651	664	758	714	740	772	730	753
16	1010	868	936	667	635	654	759	715	741	760	714	741
17	---	---	---	658	630	646	749	703	730	762	722	743
18	---	---	---	650	618	636	752	704	730	758	708	738
19	---	---	---	647	615	634	742	694	723	748	710	734
20	---	---	---	647	607	628	743	697	721	754	704	735
21	---	---	---	630	610	622	751	695	726	746	704	728
22	---	---	---	670	596	620	747	703	728	740	690	718
23	---	---	---	---	---	---	732	686	710	730	674	707
24	---	---	---	1050	638	819	708	666	691	740	690	718
25	---	---	---	642	616	631	705	659	683	742	698	723
26	---	---	---	657	621	642	975	697	750	764	700	732
27	---	---	---	645	617	632	795	737	766	764	722	747
28	---	---	---	626	602	615	996	768	553	998	760	877
29	---	---	---	648	610	629	1030	988	1020	1010	872	990
30	---	---	---	715	617	659	993	761	809	846	750	777
31	---	---	---	714	678	699	815	731	766	---	---	---
MONTH	---	---	---	1050	596	681	1030	659	724	1010	674	760
YEAR	1390	238	914									

11075720 CARBON CREEK BELOW CARBON CANYON DAM, CALIF.

LOCATION.--Lat 33°54'40", long 117°50'29", in SW¼NE¼ sec.17, T.3 S., R.9 W., Orange County, on right wall of outlet channel 250 ft (76 m) downstream from toe of Carbon Canyon Dam, and 2.4 mi (3.9 km) northwest of Yorba Linda.

DRAINAGE AREA.--19.5 mi^2 (50.5 km^2).

PERIOD OF RECORD.--October 1961 to current year.

GAGE.--Water-stage recorder. Datum of gage is 396.29 ft (120.789 m) above mean sea level (Corps of Engineers bench mark). Prior to Dec. 3, 1971, at datum 2.00 ft (0.610 m) higher.

AVERAGE DISCHARGE.--14 years, 0.49 ft^3/s (0.0139 m^3/s), 355 acre-ft/yr (438,000 m^3/yr).

EXTREMES.--Current year: Maximum discharge, 96 ft^3/s (2.71 m^3/s) Dec. 6 (gage height, 2.89 ft or 0.881 m); no flow most of year.
Period of record: Maximum discharge, 446 ft^3/s (12.6 m^3/s) Feb. 25, 1969 (gage height, 4.64 ft or 1.414 m, present datum), from rating curve extended above 110 ft^3/s (3.12 m^3/s) on basis of computation of flow in concrete-lined channel at gage height 6.18 ft (1.884 m); no flow most of each year.

REMARKS.--Records fair. Flow regulated by Carbon Canyon flood-control reservoir, capacity, 6,610 acre-ft (8.15 hm^3). No diversion above station. See schematic diagram of Santa Ana River basin.

DISCHARGE, IN CUBIC FEET PER SECOND, WATER YEAR OCTOBER 1974 TO SEPTEMBER 1975
MEAN VALUES

DAY	OCT	NOV	DEC	JAN	FEB	MAR	APR	MAY	JUN	JUL	AUG	SEP
1			0			0	0					
2			0			0	0					
3			0			0	0					
4			.01			0	0					
5			0			.01	0					
6			5.9			0	0					
7			0			0	0					
8			0			0	0					
9			0			0	0					
10			0			0	0					
11			0			0	0					
12			.01			0	0					
13			.03			9.5	0					
14			0			4.9	1.1					
15			0			0	0					
16			0			0	0					
17			0			0	0					
18			0			0	0					
19			0			0	0					
20			0			0	0					
21			0			0	0					
22			0			.01	0					
23			0			0	0					
24			0			0	0					
25			0			0	0					
26			0			0	0					
27			0			0	0					
28			0			0	0					
29			.01		---	0	0					
30			0		---	0	0					
31		---	0		---	0	---		---			---
TOTAL	0	0	5.96	0	0	14.42	1.1	0	0	0	0	0
MEAN	0	0	.19	0	0	.47	.037	0	0	0	0	0
MAX	0	0	5.9	0	0	9.5	1.1	0	0	0	0	0
MIN	0	0	0	0	0	0	0	0	0	0	0	0
AC-FT	0	0	12	0	0	29	2.2	0	0	0	0	0

CAL YR 1974	TOTAL 56.49	MEAN .15	MAX 27	MIN 0	AC-FT 112
WTR YR 1975	TOTAL 21.48	MEAN .059	MAX 9.5	MIN 0	AC-FT 43

11075760 SANTA ANA RIVER NEAR KATELLA AVENUE, AT ORANGE, CALIF.

LOCATION.--Lat 33°48'08", long 117°52'39", sec.25, T.4 S., R.10 W., Orange County, 0.2 mi (0.3 km) south of Katella Avenue, and 0.6 mi (1.0 km) east of State College Boulevard near Anaheim Stadium, at Orange.

DRAINAGE AREA.--1,593 mi^2 (4,126 km^2), excludes 768 mi^2 (1,990 km^2) above Lake Elsinore.

PERIOD OF RECORD.--December 1973 to current year.

GAGE.--Water-stage recorder. Altitude of gage is 145 ft (44 m), from topographic map.

EXTREMES.--Current year: Maximum discharge, 5,400 ft^3/s (153 m^3/s) Dec. 4 (gage height, 6.53 ft or 1.990 m); no flow most of year.
Period of record: Maximum discharge, 5,400 ft^3/s (153 m^3/s) Dec. 4, 1976 (gage height, 6.53 ft or 1.990 m), from rating curve extended above 2,900 ft^3/s (82.1 m^3/s) for gage height 6.53 ft or 1.990 m, based on indirect computation; no flow for long periods in most years.

REMARKS.--Records poor. Natural flow affected by ground-water withdrawals, diversions, importation by Metropolitan Water District, municipal use, and return flow from irrigation. Prado flood-control reservoir, capacity, 201,200 acre-ft (248 hm^3) since 1940, three small flood-control reservoirs, combined capacity, 31,900 acre-ft (39.3 hm^3), and Big Bear Lake (see sta 11049000). Discharge up to 100 ft^3/s (2.83 m^3/s) can be diverted from Carbon Creek to Coyote Creek, 1.5 mi (2.4 km) upstream from mouth of Carbon Creek. See schematic diagram of Santa Ana River basin.

DISCHARGE, IN CUBIC FEET PER SECOND, WATER YEAR OCTOBER 1974 TO SEPTEMBER 1975
MEAN VALUES

DAY	OCT	NOV	DEC	JAN	FEB	MAR	APR	MAY	JUN	JUL	AUG	SEP
1	0		0	0	0	0	0					
2	0		0	0	0	0	0					
3	0		0	0	88	0	0					
4	0		744	0	50	0	0					
5	0		357	0	29	5.0	3.7					
6	0		160	0	11	66	.30					
7	0		.20	0	1.0	26	0					
8	0		0	0	6.7	161	12					
9	0		0	0	84	34	21					
10	0		0	0	46	76	.20					
11	0		0	0	17	33	0					
12	0		0	0	25	11	0					
13	0		0	0	55	3.2	0					
14	0		0	0	2.1	27	0					
15	0		0	0	0	14	1.0					
16	0		0	0	5.0	7.0	.20					
17	0		0	0	.10	11	5.2					
18	0		0	0	0	9.1	2.0					
19	0		0	0	0	5.8	.50					
20	0		0	0	0	3.4	0					
21	0		0	0	0	1.0	0					
22	0		0	0	0	12	0					
23	0		0	0	0	9.1	0					
24	0		0	0	0	13	0					
25	0		0	0	0	4.5	0					
26	0		0	0	0	4.5	0					
27	0		0	0	0	.40	0					
28	0		35	0	0	0	0					
29	.11		44	0.	---	0	0					
30	0		5.3	4.0	---	0	0					
31	0	---	0	0	---	0	---		---			---
TOTAL	.11	0	1345.50	4.0	419.90	537.00	46.10	0	0	0	0	0
MEAN	.004	0	43.4	.13	15.0	17.3	1.54	0	0	0	0	0
MAX	.11	0	744	4.0	88	161	21	0	0	0	0	0
MIN	0	0	0	0	0	0	0	0	0	0	0	0
AC-FT	.2	0	2670	7.9	833	1070	91	0	0	0	0	0

CAL YR 1974 TOTAL 5656.81 MEAN 15.5 MAX 1030 MIN 0 AC-FT 11220
WTR YR 1975 TOTAL 2352.61 MEAN 6.45 MAX 744 MIN 0 AC-FT 4670

11075760 SANTA ANA RIVER NEAR KATELLA AVENUE, AT ORANGE, CALIF.--Continued

PERIOD OF RECORD.--Water temperatures: January 1974 to current year.
Sediment records: January 1974 to current year.

EXTREMES.--Current year:
Sediment concentrations: Maximum daily, 4,270 mg/l Dec. 4; minimum daily, no flow for many days.
Sediment discharge: Maximum daily, 16,100 tons (14,700 tonnes) Dec. 4; minimum daily, 0 tons (0 tonnes) on many days.
Period of record:
Sediment concentrations: Maximum daily, 8,840 mg/l Jan. 8, 1974; minimum daily, no flow for many days each year.
Sediment discharge: Maximum daily, 30,900 tons (28,000 tonnes) Jan. 8, 1974; minimum daily, 0 tons (0 tonnes) on many days each year.

REMARKS.--Sediment table omitted for period of no flow during July to September.

TEMPERATURE (DEG. C) OF WATER, WATER YEAR OCTOBER 1974 TO SEPTEMBER 1975
ONCE-DAILY

DAY	OCT	NOV	DEC	JAN	FEB	MAR	APR	MAY	JUN	JUL	AUG	SEP
1	---		---		---	---	---					
2	---		---		---	---	---					
3	---		---		11.5	---	---					
4	---		14.0		13.0	---	---					
5	---		15.0		14.0	---	---					
6	---		17.5		14.0	14.0	---					
7	---		---		---	14.0	---					
8	---		---		---	15.0	---					
9	---		---		14.0	---	12.0					
10	---		---		---	14.0	---					
11	---		---		12.5	13.0	---					
12	---		---		---	---	---					
13	---		---		15.0	---	---					
14	---		---		19.0	19.0	---					
15	---		---		---	---	---					
16	---		---		---	---	---					
17	---		---		---	---	18.0					
18	---		---		---	---	---					
19	---		---		---	---	---					
20	---		---		---	18.0	---					
21	---		---		---	---	---					
22	---		---		---	---	---					
23	---		---		---	---	---					
24	---		---		---	22.5	---					
25	---		---		---	---	---					
26	---		---		---	12.0	---					
27	---		---		---	---	---					
28	---		14.0		---	---	---					
29	15.0		10.0		---	---	---					
30	---		10.0		---	---	---					
31	---		---		---	---	---					
MONTH	---		---		---	---	---					

11075760 SANTA ANA RIVER NEAR KATELLA AVENUE, AT ORANGE, CALIF.--Continued

SUSPENDED-SEDIMENT DISCHARGE (TONS/DAY), WATER YEAR OCTOBER 1974 TO SEPTEMBER 1975

	OCTOBER			NOVEMBER			DECEMBER		
DAY	MEAN DISCHARGE (CFS)	MEAN CONCEN-TRATION (MG/L)	SEDIMENT DISCHARGE (TONS/DAY)	MEAN DISCHARGE (CFS)	MEAN CONCEN-TRATION (MG/L)	SEDIMENT DISCHARGE (TONS/DAY)	MEAN DISCHARGE (CFS)	MEAN CONCEN-TRATION (MG/L)	SEDIMENT DISCHARGE (TONS/DAY)
1	0	0					0	0	0
2	0	0					0	0	0
3	0	0					0	0	0
4	0	0					744	4270	16100
5	0	0					357	2820	2810
6	0	0					160	1330	995
7	0	0					.20	30	.02
8	0	0					0	0	0
9	0	0					0	0	0
10	0	0					0	0	0
11	0	0					0	0	0
12	0	0					0	0	0
13	0	0					0	0	0
14	0	0					0	0	0
15	0	0					0	0	0
16	0	0					0	0	0
17	0	0					0	0	0
18	0	0					0	0	0
19	0	0					0	0	0
20	0	0					0	0	0
21	0	0					0	0	0
22	0	0					0	0	0
23	0	0					0	0	0
24	0	0					0	0	0
25	0	0					0	0	0
26	0	0					0	0	0
27	0	0					0	0	0
28	0	0					35	350	112
29	.11	6					44	515	109
30	0	0					5.3	58	1.7
31	0	0					0	0	0
TOTAL	.11	---	0	0	0	0	1345.50	---	20127.72

	JANUARY			FEBRUARY			MARCH		
DAY	MEAN DISCHARGE (CFS)	MEAN CONCEN-TRATION (MG/L)	SEDIMENT DISCHARGE (TONS/DAY)	MEAN DISCHARGE (CFS)	MEAN CONCEN-TRATION (MG/L)	SEDIMENT DISCHARGE (TONS/DAY)	MEAN DISCHARGE (CFS)	MEAN CONCEN-TRATION (MG/L)	SEDIMENT DISCHARGE (TONS/DAY)
1	0	0	0	0	0	0	0	0	0
2	0	0	0	0	0	0	0	0	0
3	0	0	0	88	710	288	0	0	0
4	0	0	0	50	305	41	0	0	0
5	0	0	0	29	130	10	5.0	55	7.1
6	0	0	0	11	90	2.7	66	630	168
7	0	0	0	1.0	30	.08	26	175	17
8	0	0	0	6.7	50	.90	161	580	360
9	0	0	0	84	410	189	34	85	7.8
10	0	0	0	46	140	21	76	440	207
11	0	0	0	17	45	2.1	33	255	31
12	0	0	0	25	100	6.8	11	90	2.7
13	0	0	0	55	125	19	3.2	35	.30
14	0	0	0	2.1	35	.20	27	270	56
15	0	0	0	0	0	0	14	130	4.9
16	0	0	0	5.0	40	.54	7.0	70	1.3
17	0	0	0	.10	20	.01	11	100	3.0
18	0	0	0	0	0	0	9.1	80	2.0
19	0	0	0	0	0	0	5.8	55	.86
20	0	0	0	0	0	0	3.4	40	.37
21	0	0	0	0	0	0	1.0	20	.05
22	0	0	0	0	0	0	12	95	11
23	0	0	0	0	0	0	9.1	70	1.7
24	0	0	0	0	0	0	13	80	2.8
25	0	0	0	0	0	0	4.5	50	.61
26	0	0	0	0	0	0	4.5	30	.36
27	0	0	0	0	0	0	.40	20	.02
28	0	0	0	0	0	0	0	0	0
29	0	0	0	---	---	---	0	0	0
30	4.0	50	6.3	---	---	---	0	0	0
31	0	0	0	---	---	---	0	0	0
TOTAL	4.00	---	6.30	419.90	---	581.33	537.00	---	885.87

11075760 SANTA ANA RIVER NEAR KATELLA AVENUE, AT ORANGE, CALIF.--Continued

SUSPENDED-SEDIMENT DISCHARGE (TONS/DAY), WATER YEAR OCTOBER 1974 TO SEPTEMBER 1975

	APRIL			MAY			JUNE		
DAY	MEAN DISCHARGE (CFS)	MEAN CONCEN-TRATION (MG/L)	SEDIMENT DISCHARGE (TONS/DAY)	MEAN DISCHARGE (CFS)	MEAN CONCEN-TRATION (MG/L)	SEDIMENT DISCHARGE (TONS/DAY)	MEAN DISCHARGE (CFS)	MEAN CONCEN-TRATION (MG/L)	SEDIMENT DISCHARGE (TONS/DAY)
1	0	0	0						
2	0	0	0						
3	0	0	0						
4	0	0	0						
5	3.7	16	.92						
6	.30	15	.01						
7	0	0	0						
8	12	185	48						
9	21	375	55						
10	.20	20	.01						
11	0	0	0						
12	0	0	0						
13	0	0	0						
14	0	0	0						
15	1.0	25	.07						
16	.20	15	.01						
17	5.2	40	.56						
18	2.0	35	.19						
19	.50	25	.03						
20	0	0	0						
21	0	0	0						
22	0	0	0						
23	0	0	0						
24	0	0	0						
25	0	0	0						
26	0	0	0						
27	0	0	0						
28	0	0	0						
29	0	0	0						
30	0	0	0						
31	---	---	---						
TOTAL	46.10	---	104.80	0	0	0	0	0	0

SUMMARY OF WATER AND SEDIMENT DISCHARGE, WATER YEAR OCTOBER 1974 TO SEPTEMBER 1975

MONTH	WATER DISCHARGE CFS-DAYS	SUSPENDED SEDIMENT DISCHARGE TONS	BEDLOAD DISCHARGE TONS	TOTAL SEDIMENT DISCHARGE TONS
OCTOBER 1974	0.11	0.0	0	0
NOVEMBER ...	0.0	0.0	0	0
DECEMBER ...	1345.50	20127.72	2980	23100
JANUARY 1975	4.00	6.30	0	6
FEBRUARY ...	419.90	581.33	158	739
MARCH	537.00	885.87	237	1120
APRIL	46.10	104.80	6	111
MAY	0.0	0.0	0	0
JUNE	0.0	0.0	0	0
JULY	0.0	0.0	0	0
AUGUST	0.0	0.0	0	0
SEPTEMBER ..	0.0	0.0	0	0
TOTAL	2352.61	21706.02	3381	25076

11075760 SANTA ANA RIVER NEAR KATELLA AVENUE, AT ORANGE, CALIF.--Continued

PARTICLE-SIZE DISTRIBUTION OF SUSPENDED SEDIMENT, WATER YEAR OCTOBER 1974 TO SEPTEMBER 1975

DATE	TIME	TEMPER-ATURE (DEG C)	INSTAN-TANEOUS DIS-CHARGE (CFS)	SUS-PENDED SEDI-MENT (MG/L)	SUS-PENDED SEDI-MENT DIS-CHARGE (T/DAY)	SUS. SED. FALL DIAM. % FINER THAN .002 MM	SUS. SED. FALL DIAM. % FINER THAN .004 MM	SUS. SED. FALL DIAM. % FINER THAN .008 MM	SUS. SED. FALL DIAM. % FINER THAN .016 MM	SUS. SED. FALL DIAM. % FINER THAN .031 MM	SUS. SED. FALL DIAM. % FINER THAN .062 MM
DEC.											
04...	1430	14.0	425	4440	5100	39	50	60	70	76	83
05...	1345	15.0	450	2930	3560	26	32	39	47	52	63
29...	1335	10.0	50	436	59	54	68	77	83	87	--
FEB.											
03...	1120	12.0	115	735	228	29	35	41	48	54	--
MAR.											
07...	1415	22.0	20	129	7.0	--	--	--	--	--	--
08...	1225	15.5	185	1200	599	33	40	49	57	65	74
APR.											
09...	0915	12.0	23	223	14	--	--	--	--	--	--

DATE	SUS. SED. SIEVE DIAM. % FINER THAN .062 MM	SUS. SED. FALL DIAM. % FINER THAN .125 MM	SUS. SED. SIEVE DIAM. % FINER THAN .125 MM	SUS. SED. FALL DIAM. % FINER THAN .250 MM	SUS. SED. SIEVE DIAM. % FINER THAN .250 MM	SUS. SED. FALL DIAM. % FINER THAN .500 MM	SUS. SED. SIEVE DIAM. % FINER THAN .500 MM	SUS. SED. FALL DIAM. % FINER THAN 1.00 MM	SUS. SED. SIEVE DIAM. % FINER THAN 1.00 MM	SUS. SED. SIEVE DIAM. % FINER THAN 2.00 MM
DEC.										
04...	--	91	--	97	--	100	--	--	--	--
05...	--	72	--	81	--	96	--	100	--	--
29...	88	--	92	--	98	--	100	--	--	--
FEB.										
03...	62	--	73	--	88	--	99	--	100	--
MAR.										
07...	90	--	93	--	96	--	98	--	100	--
08...	--	85	--	96	--	100	--	--	--	--
APR.										
09...	41	--	45	--	55	--	64	--	76	100

11075800 SANTIAGO CREEK AT MODJESKA, CALIF.

LOCATION.--Lat 33°42'32", long 117°38'05", in SE¼SE¼NW¼ sec.29, T.5 S., R.7 W., Orange County, on right bank at Santiago Canyon road bridge, 0.3 mi (0.5 km) west of Modjeska, and 0.4 mi (0.6 km) downstream from Harding Creek.

DRAINAGE AREA.--12.5 mi^2 (32.4 km^2).

PERIOD OF RECORD.--October 1961 to current year.

GAGE.--Water-stage recorder and crest-stage gage. Datum of gage is 1,254.35 ft (382.326 m) above mean sea level. Prior to Sept. 10, 1969, at datum 4.42 ft (1.347 m) higher.

AVERAGE DISCHARGE.--14 years, 6.63 ft^3/s (0.188 m^3/s), 4,800 acre-ft/yr (5.92 hm^3/yr).

EXTREMES.--Current year: Maximum discharge, 185 ft^3/s (5.24 m^3/s) Mar. 8 (gage height, 4.40 ft or 1.341 m); no flow on some days.
Period of record: Maximum discharge, 6,520 ft^3/s (185 m^3/s) Feb. 25, 1969 (gage height, 10.50 ft or 3.200 m, present datum), from rating curve extended above 840 ft^3/s (23.8 m^3/s) on basis of slope-area measurement of maximum flow; no flow at times each year.

REMARKS.--Records poor. Slight regulation by Modjeska Reservoir on Harding Creek. No diversion above station. See schematic diagram of Santa Ana River basin.

COOPERATION.--Four discharge measurements furnished by Orange County Flood Control District.

DISCHARGE, IN CUBIC FEET PER SECOND, WATER YEAR OCTOBER 1974 TO SEPTEMBER 1975
MEAN VALUES

DAY	OCT	NOV	DEC	JAN	FEB	MAR	APR	MAY	JUN	JUL	AUG	SEP
1	0	.01	.01	1.3	.71	1.0	4.6	5.5	2.1	.40	.21	.03
2	0	.01	.01	1.2	.70	.89	4.4	5.3	2.0	.40	.20	.07
3	0	.01	.02	1.2	5.1	.74	4.0	5.0	1.8	.35	.23	.13
4	0	0	2.8	1.1	3.0	.75	3.5	4.7	2.0	.38	.21	.13
5	0	0	2.0	1.1	1.6	.80	3.5	4.6	1.9	.36	.18	.08
6	0	.01	1.1	1.0	1.0	3.7	3.0	4.4	1.9	.38	.17	.02
7	0	.01	.93	.98	1.2	4.0	3.2	4.2	1.8	.40	.16	.02
8	0	.01	.82	.96	1.1	59	5.2	4.0	1.7	.39	.16	.02
9	0	.01	.80	.93	3.1	29	28	3.8	1.6	.36	.14	.01
10	0	.01	.80	.91	7.0	26	22	3.6	1.5	.41	.13	.01
11	0	0	.80	.89	5.7	34	18	3.4	1.4	.37	.13	.01
12	0	0	.80	.87	4.8	21	13	3.2	1.4	.38	.13	.01
13	0	0	.80	.86	4.0	15	12	3.0	1.3	.40	.13	.01
14	0	0	.80	.84	3.3	17	11	2.9	1.3	.40	.11	.01
15	0	0	.80	.82	2.7	14	11	2.8	1.1	.39	.10	.01
16	0	0	.80	.82	2.5	12	9.9	2.7	1.1	.41	.10	.01
17	0	0	.81	.80	2.1	11	9.1	2.7	1.1	.35	.09	.01
18	0	0	.80	.79	1.9	9.0	9.0	2.7	1.1	.35	.07	0
19	0	0	.80	.79	1.4	7.6	8.8	2.6	1.1	.35	.06	0
20	0	0	.80	.78	1.2	6.6	7.6	3.0	.98	.35	.06	0
21	0	0	.81	.78	1.0	5.4	7.7	2.8	.88	.30	.06	0
22	0	0	.84	.77	1.0	8.7	6.2	2.6	.78	.30	.06	.01
23	.01	0	.84	.77	.89	7.6	7.5	2.4	.79	.30	.06	0
24	.01	.01	.84	.76	1.0	6.5	7.1	2.3	.72	.30	.06	0
25	.01	.01	.86	.75	1.2	6.0	7.1	2.6	.65	.30	.05	0
26	.01	.01	.89	.74	1.0	5.6	6.2	2.6	.62	.30	.04	0
27	.01	.01	.89	.74	.89	5.4	6.8	2.6	.58	.25	.04	0
28	.02	.01	1.2	.73	.94	5.3	6.4	2.5	.53	.23	.04	0
29	.02	.01	2.0	.73	---	5.2	6.2	2.5	.49	.22	.04	0
30	.02	.01	1.5	.72	---	5.0	5.4	2.3	.45	.23	.04	0
31	.01	---	1.4	.72	---	4.8	---	2.3	---	.23	.03	---
TOTAL	.12	.15	29.37	27.15	62.03	338.58	257.4	101.6	36.67	10.54	3.29	.60
MEAN	.004	.005	.95	.88	2.22	10.9	8.58	3.28	1.22	.34	.11	.020
MAX	.02	.01	2.8	1.3	7.0	59	28	5.5	2.1	.41	.23	.13
MIN	0	0	.01	.72	.70	.74	3.0	2.3	.45	.22	.03	0
AC-FT	.2	.3	58	54	123	672	511	202	73	21	6.5	1.2

CAL YR 1974 TOTAL 1137.80 MEAN 3.12 MAX 192 MIN 0 AC-FT 2260
WTR YR 1975 TOTAL 867.50 MEAN 2.38 MAX 59 MIN 0 AC-FT 1720

Peak discharge (base, 100 ft^3/s).--Mar. 8 (1600) 185 ft^3/s (4.40 ft).

NOTE.--No gage-height record or stage-discharge relation indefinite Dec. 31 to Feb. 9.

11077500 SANTIAGO CREEK AT SANTA ANA, CALIF.

LOCATION.--Lat 33°46'13", long 117°53'02", in NW¼SW¼NW¼ sec.1, T.5 S., R.10 W., Orange County, on downstream side of Bristol Street bridge at Santa Ana, and 1,600 ft (500 m) upstream from mouth.

DRAINAGE AREA.--98.6 mi^2 (255 km^2), revised.

PERIOD OF RECORD.--October 1928 to current year. Monthly discharge only October to December 1928, published in WSP 1315-B.

GAGE.--Water-stage recorder and crest-stage gage. Datum of gage is 102.34 ft (31.193 m) above mean sea level (Orange County Flood Control District bench mark). Prior to Sept. 8, 1969, at site 0.1 mi (0.2 km) upstream at different datum.

AVERAGE DISCHARGE.--47 years, 5.03 ft^3/s (0.142 m^3/s), 3,640 acre-ft/yr (4.49 hm^3/yr).

EXTREMES.--Current year: Maximum discharge occurred on Jan. 7 (discharge unknown); no flow most of year.
Period of record: Maximum discharge, 6,600 ft^3/s (187 m^3/s) Feb. 25, 1969 (gage height, 9.10 ft or 2.774 m, site and datum then in use); maximum gage height, 9.85 ft (3.002 m) Jan. 16, 1952; no flow most of each year.

REMARKS.--Records poor. Flow regulated by Santiago Reservoir, capacity, 25,000 acre-ft (30.8 hm^3), since January 1963 by Villa Park flood-control reservoir, capacity, 15,500 acre-ft (19.1 hm^3), and affected by intervening gravel pits. Diversions above station by Irvine Co. and Serrano and Carpenter Irrigation Districts. See schematic diagram of Santa Ana River basin. Chemical-quality data for this station are published in the partial-record section of this report.

DISCHARGE, IN CUBIC FEET PER SECOND, WATER YEAR OCTOBER 1974 TO SEPTEMBER 1975
MEAN VALUES

DAY	OCT	NOV	DEC	JAN	FEB	MAR	APR	MAY	JUN	JUL	AUG	SEP
1			0	0	0	0	0				0	0
2			0	0	0	0	0				0	0
3			0	0	32	0	0				0	0
4			139	0	7.1	0	0				0	0
5			0	0	.58	2.2	16				0	0
6			0	0	0	4.4	9.3				0	0
7			0	0	0	2.6	0				0	0
8			0	0	0	61	36				0	0
9			0	0	3.6	0	23				0	0
10			0	0	0	42	0				0	0
11			0	0	0	4.9	0				0	0
12			0	0	0	0	0				0	0
13			0	0	0	.42	0				0	0
14			0	0	0	3.1	0				0	0
15			0	0	0	0	1.6				0	0
16			0	0	0	.06	.18				0	.06
17			0	0	0	0	1.5				0	0
18			0	0	0	0	0				0	0
19			0	0	0	0	0				0	0
20			0	0	0	0	0				0	.25
21			0	0	0	0	.24				0	.17
22			0	0	0	5.0	.42				0	.05
23			0	0	0	0	0				0	.11
24			0	0	0	0	0				0	.05
25			0	0	0	0	1.8				0	.06
26			0	0	0	0	0				0	.05
27			0	0	0	0	0				0	.30
28			16	0	0	0	0				.06	.24
29			3.7	0	---	0	0				0	.24
30			0	.11	---	0	0				0	.06
31		---	0	0	---	0	---		---		0	---
TOTAL	0	0	158.7	.11	43.28	125.68	90.04	0	0	0	.06	1.64
MEAN	0	0	5.12	.004	1.55	4.05	3.00	0	0	0	.002	.055
MAX	0	0	139	.11	32	61	36	0	0	0	.06	.30
MIN	0	0	0	0	0	0	0	0	0	0	0	0
AC-FT	0	0	315	.2	86	249	179	0	0	0	.1	3.3

CAL YR 1974 TOTAL 552.04 MEAN 1.51 MAX 144 MIN 0 AC-FT 1090
WTR YR 1975 TOTAL 419.51 MEAN 1.15 MAX 139 MIN 0 AC-FT 832

11078000 SANTA ANA RIVER AT SANTA ANA, CALIF.

LOCATION.--Lat 33°44'56", long 117°54'30", in NW¼SW¼SE¼ sec.10, T.5 S., R.10 W., Orange County, on pier of Fifth Street Bridge in Santa Ana, 1.8 mi (2.9 km) downstream from Santiago Creek.

DRAINAGE AREA.--1,700 mi^2 (4,403 km^2), excludes 768 mi^2 (1,989 km^2) above Lake Elsinore.

PERIOD OF RECORD.--January 1923 to current year.

GAGE.--Water-stage recorder. Datum of gage is 71.20 ft (21.702 m) above mean sea level (Orange County bench mark). Jan. 3, 1923, to Jan. 24, 1929, at same site at different datum. Jan. 25, 1929, to June 20, 1948, at site 450 ft (137 m) upstream at different datum. June 21, 1948, to May 2, 1960, at same site at different datum. Feb. 28, 1961, to Oct. 1, 1961, at same site at datum 2.00 ft (0.610 m) higher.

AVERAGE DISCHARGE.--17 years (1923-40), 23.4 ft^3/s (0.6627 m^3/s), 16,940 acre-ft/yr (20.9 hm^3/yr); 35 years (1940-75), 28.4 ft^3/s (0.8043 m^3/s), 20,580 acre-ft/yr (25.4 hm^3/yr).

EXTREMES.--Current year: Maximum discharge, 6,100 ft^3/s (173 m^3/s) Dec. 4 (gage height, 4.72 ft or 1.439 m); no flow most of year.
Period of record: Maximum discharge (excludes flow which bypassed gage from break in levee below Imperial Highway), 46,300 ft^3/s (1,310 m^3/s) Mar. 3, 1938 (gage height, 10.20 ft or 3.109 m), site and datum then in use), on basis of slope-area measurement of maximum flow; no flow for several months in each year.

REMARKS.--Records fair. Natural flow affected by ground-water withdrawals, diversions, importation by Metropolitan Water District, municipal use, return flow from irrigation, Prado flood-control reservoir, capacity, 201,200 acre-ft (248 hm^3) since 1940, three small flood-control reservoirs, combined capacity, 31,900 acre-ft (39.3 hm^3), Big Bear Lake (see sta 11049000), and Santiago Reservoir, capacity, 25,000 acre-ft (30.8 hm^3). Discharge up to 100 ft^3/s (2.83 m^3/s) can be diverted from Carbon Creek to Coyote Creek 1.5 mi (2.4 km) upstream from mouth of Carbon Creek. See schematic diagram of Santa Ana River basin.

REVISION.--WRD Calif. 1974: Drainage area.

DISCHARGE, IN CUBIC FEET PER SECOND, WATER YEAR OCTOBER 1974 TO SEPTEMBER 1975
MEAN VALUES

DAY	OCT	NOV	DEC	JAN	FEB	MAR	APR	MAY	JUN	JUL	AUG	SEP
1	0		0	.01	0	0	0	0				
2	0		0	0	0	0	0	0				
3	0		0	0	144	0	0	0				
4	0		846	0	52	0	0	0				
5	0		346	0	34	9.0	5.9	0				
6	0		195	0	8.8	86	3.9	0				
7	0		.52	0	15	27	.20	0				
8	0		.19	0	5.0	254	48	0				
9	0		0	0	110	60	59	0				
10	0		0	0	55	179	.60	0				
11	0		0	0	19	70	1.9	0				
12	0		0	0	36	14	4.8	0				
13	0		0	0	60	4.3	.10	0				
14	0		0	0	3.8	49	0	0				
15	0		0	0	0	8.8	1.9	0				
16	0		0	0	7.2	7.2	.50	0				
17	0		0	0	.80	6.0	6.0	0				
18	0		0	0	0	4.8	3.8	0				
19	0		0	0	0	3.8	1.3	0				
20	0		0	0	0	2.2	.50	.14				
21	0		0	0	0	1.1	0	.14				
22	0		0	0	0	66	0	0				
23	0		0	0	0	17	0	0				
24	0		0	0	0	24	0	0				
25	0		0	0	0	17	2.4	0				
26	0		0	0	0	7.2	0	0				
27	0		0	0	0	.11	0	0				
28	0		53	0	0	0	0	0				
29	.21		73	0	---	0	0	0				
30	0		2.9	.53	---	0	0	0				
31	0	---	.52	.16	---	0	---	0	---			---
TOTAL	.21	0	1517.13	.70	550.60	917.51	140.80	.28	0	0	0	0
MEAN	.007	0	48.9	.023	19.7	29.6	4.69	.009	0	0	0	0
MAX	.21	0	846	.53	144	254	59	.14	0	0	0	0
MIN	0	0	0	0	0	0	0	0	0	0	0	0
AC-FT	.4	0	3010	1.4	1090	1820	279	.6	0	0	0	0

CAL YR 1974 TOTAL 6375.74 MEAN 17.5 MAX 1120 MIN 0 AC-FT 12650
WTR YR 1975 TOTAL 3127.23 MEAN 8.57 MAX 846 MIN 0 AC-FT 6200

11078000 SANTA ANA RIVER AT SANTA ANA, CALIF.--Continued

PERIOD OF RECORD.--Water temperatures: October 1967 to September 1969, October 1970 to September 1971, October 1972 to current year.
Sediment records: October 1967 to September 1971, October 1972 to current year.

EXTREMES.--Current year:
Sediment concentrations: Maximum daily, 3,440 mg/l Dec. 4; minimum daily, no flow for many days.
Sediment discharge: Maximum daily, 17,600 tons (16,000 tonnes) Dec. 4; minimum daily, 0 tons (0 tonnes) on many days.
Period of record:
Sediment concentrations: Maximum daily, 78,000 mg/l Feb. 25, 1969; minimum daily, no flow for many days each year.
Sediment discharge: Maximum daily, 2,670,000 tons (2,420,000 tonnes) Feb. 25, 1969; minimum daily, 0 tons (0 tonnes) on many days each year.

REMARKS.--Sediment table omitted for period of no flow during July to September.

TEMPERATURE (DEG. C) OF WATER, WATER YEAR OCTOBER 1974 TO SEPTEMBER 1975
(ONCE-DAILY)

DAY	OCT	NOV	DEC	JAN	FEB	MAR	APR	MAY	JUN	JUL	AUG	SEP
1	---		---	---	---	---	---					
2	---		---	---	---	---	---					
3	---		---	---	10.0	---	---					
4	---		13.0	---	9.5	---	---					
5	---		12.0	---	11.0	---	---					
6	---		11.0	---	15.5	12.0	11.0					
7	---		---	---	---	22.0	7.0					
8	---		---	---	13.0	15.0	13.0					
9	---		---	---	14.0	---	10.0					
10	---		---	---	17.0	12.0	9.5					
11	---		---	---	10.5	10.0	11.0					
12	---		---	---	---	8.0	13.5					
13	---		---	---	13.0	23.0	---					
14	---		---	---	12.0	8.0	---					
15	---		---	---	---	---	---					
16	---		---	---	---	---	---					
17	---		---	---	---	---	10.0					
18	---		---	---	---	---	8.0					
19	---		---	---	---	---	11.0					
20	---		---	---	---	16.0	---					
21	---		---	---	---	12.0	---					
22	---		---	---	---	13.0	---					
23	---		---	---	---	---	---					
24	---		---	---	---	21.5	---					
25	---		---	---	---	13.5	---					
26	---		---	---	---	15.0	---					
27	---		---	---	---	---	---					
28	---		11.5	---	---	---	---					
29	14.0		8.0	---	---	---	---					
30	---		10.5	11.5	---	---	---					
31	---		---	5.0	---	---	---					
MEAN	---		---	---	---	---	---					

11078000 SANTA ANA RIVER AT SANTA ANA, CALIF.--Continued

SUSPENDED-SEDIMENT DISCHARGE (TONS/DAY), WATER YEAR OCTOBER 1974 TO SEPTEMBER 1975

	OCTOBER			NOVEMBER			DECEMBER		
DAY	MEAN DISCHARGE (CFS)	MEAN CONCEN-TRATION (MG/L)	SEDIMENT DISCHARGE (TONS/DAY)	MEAN DISCHARGE (CFS)	MEAN CONCEN-TRATION (MG/L)	SEDIMENT DISCHARGE (TONS/DAY)	MEAN DISCHARGE (CFS)	MEAN CONCEN-TRATION (MG/L)	SEDIMENT DISCHARGE (TONS/DAY)
1	0	0	0				0	0	0
2	0	0	0				0	0	0
3	0	0	0				0	0	0
4	0	0	0				846	3440	17600
5	0	0	0				346	3250	3290
6	0	0	0				195	1650	1400
7	0	0	0				.52	40	.06
8	0	0	0				.19	20	.01
9	0	0	0				0	0	0
10	0	0	0				0	0	0
11	0	0	0				0	0	0
12	0	0	0				0	0	0
13	0	0	0				0	0	0
14	0	0	0				0	0	0
15	0	0	0				0	0	0
16	0	0	0				0	0	0
17	0	0	0				0	0	0
18	0	0	0				0	0	0
19	0	0	0				0	0	0
20	0	0	0				0	0	0
21	0	0	0				0	0	0
22	0	0	0				0	0	0
23	0	0	0				0	0	0
24	0	0	0				0	0	0
25	0	0	0				0	0	0
26	0	0	0				0	0	0
27	0	0	0				0	0	0
28	0	0	0				53	450	173
29	.21	8	.02				73	620	177
30	0	0	0				2.9	20	.16
31	0	0	0				.52	10	.01
TOTAL	.21	---	.02	0	0	0	1517.13	---	22640.24

	JANUARY			FEBRUARY			MARCH		
DAY	MEAN DISCHARGE (CFS)	MEAN CONCEN-TRATION (MG/L)	SEDIMENT DISCHARGE (TONS/DAY)	MEAN DISCHARGE (CFS)	MEAN CONCEN-TRATION (MG/L)	SEDIMENT DISCHARGE (TONS/DAY)	MEAN DISCHARGE (CFS)	MEAN CONCEN-TRATION (MG/L)	SEDIMENT DISCHARGE (TONS/DAY)
1	.01	5	0	0	0	0	0	0	0
2	0	0	0	0	0	0	0	0	0
3	0	0	0	144	1000	674	0	0	0
4	0	0	0	52	250	35	0	0	0
5	0	0	0	34	160	15	9.0	51	14
6	0	0	0	8.8	45	1.1	86	570	189
7	0	0	0	15	80	4.6	27	125	17
8	0	0	0	5.0	35	.47	254	1630	1820
9	0	0	0	110	490	263	60	180	29
10	0	0	0	55	120	18	179	670	700
11	0	0	0	19	68	3.5	70	244	72
12	0	0	0	36	45	4.4	14	105	4.0
13	0	0	0	60	145	23	4.3	40	.46
14	0	0	0	3.8	25	.26	49	190	85
15	0	0	0	0	0	0	8.8	30	.71
16	0	0	0	7.2	40	.78	7.2	40	.78
17	0	0	0	.80	25	.05	6.0	35	.57
18	0	0	0	0	0	0	4.8	40	.52
19	0	0	0	0	0	0	3.8	35	.36
20	0	0	0	0	0	0	2.2	40	.24
21	0	0	0	0	0	0	1.1	15	.04
22	0	0	0	0	0	0	66	195	90
23	0	0	0	0	0	0	17	30	1.4
24	0	0	0	0	0	0	24	100	6.5
25	0	0	0	0	0	0	17	35	1.6
26	0	0	0	0	0	0	7.2	50	.97
27	0	0	0	0	0	0	.11	15	0
28	0	0	0	0	0	0	0	0	0
29	0	0	0	---	---	---	0	0	0
30	.53	30	.04	---	---	---	0	0	0
31	.16	45	.02	---	---	---	0	0	0
TOTAL	.70	---	.06	550.60	---	1043.16	917.51	---	3034.15

11078000 SANTA ANA RIVER AT SANTA ANA, CALIF.--Continued

SUSPENDED-SEDIMENT DISCHARGE (TONS/DAY), WATER YEAR OCTOBER 1974 TO SEPTEMBER 1975

	APRIL			MAY			JUNE		
DAY	MEAN DISCHARGE (CFS)	MEAN CONCEN-TRATION (MG/L)	SEDIMENT DISCHARGE (TONS/DAY)	MEAN DISCHARGE (CFS)	MEAN CONCEN-TRATION (MG/L)	SEDIMENT DISCHARGE (TONS/DAY)	MEAN DISCHARGE (CFS)	MEAN CONCEN-TRATION (MG/L)	SEDIMENT DISCHARGE (TONS/DAY)
1	0	0	0	0	0	0			
2	0	0	0	0	0	0			
3	0	0	0	0	0	0			
4	0	0	0	0	0	0			
5	5.9	50	4.2	0	0	0			
6	3.9	90	1.5	0	0	0			
7	.20	15	.01	0	0	0			
8	48	225	287	0	0	0			
9	59	375	212	0	0	0			
10	.60	25	.04	0	0	0			
11	1.9	60	.31	0	0	0			
12	4.8	40	.52	0	0	0			
13	.10	5	0	0	0	0			
14	0	0	0	0	0	0			
15	1.9	30	.15	0	0	0			
16	.50	35	.05	0	0	0			
17	6.0	50	.81	0	0	0			
18	3.8	13	.13	0	0	0			
19	1.3	20	.07	0	0	0			
20	.50	25	.03	.14	25	.01			
21	0	0	0	.14	15	.01			
22	0	0	0	0	0	0			
23	0	0	0	0	0	0			
24	0	0	0	0	0	0			
25	2.4	30	.19	0	0	0			
26	0	0	0	0	0	0			
27	0	0	0	0	0	0			
28	0	0	0	0	0	0			
29	0	0	0	0	0	0			
30	0	0	0	0	0	0			
31	---	---	---	0	0	0			
TOTAL	140.80	---	507.01	.28	---	.02	0	0	0
YEAR	3127.23		27224.66						

SUMMARY OF WATER AND SEDIMENT DISCHARGE, WATER YEAR OCTOBER 1974 TO SEPTEMBER 1975

MONTH	WATER DISCHARGE CFS-DAYS	SUSPENDED SEDIMENT DISCHARGE TONS	BEDLOAD DISCHARGE TONS	TOTAL SEDIMENT DISCHARGE TONS
OCTOBER 1974	0.21	0.02	0	0
NOVEMBER ...	0.0	0.0	0	0
DECEMBER ...	1517.13	22640.24	7470	30100
JANUARY 1975	0.70	0.06	0	0
FEBRUARY ...	550.60	1043.16	1110	2160
MARCH	917.51	3034.15	2350	5380
APRIL	140.80	507.01	189	696
MAY	0.28	0.02	0	0
JUNE	0.0	0.0	0	0
JULY	0.0	0.0	0	0
AUGUST	0.0	0.0	0	0
SEPTEMBER ..	0.0	0.0	0	0
TOTAL	3127.23	27224.66	11119	38336

11078000 SANTA ANA RIVER AT SANTA ANA, CALIF.--Continued

PARTICLE-SIZE DISTRIBUTION OF SUSPENDED SEDIMENT, WATER YEAR OCTOBER 1974 TO SEPTEMBER 1975

DATE	TIME	TEMPERATURE (DEG C)	INSTANTANEOUS DISCHARGE (CFS)	SUSPENDED SEDIMENT (MG/L)	SUSPENDED SEDIMENT DISCHARGE (T/DAY)	SUS. SED. FALL DIAM. % FINER THAN .002 MM	SUS. SED. FALL DIAM. % FINER THAN .004 MM	SUS. SED. FALL DIAM. % FINER THAN .008 MM	SUS. SED. FALL DIAM. % FINER THAN .016 MM	SUS. SED. FALL DIAM. % FINER THAN .031 MM
OCT.										
29...	0810	14.0	1.0	64	.17	--	--	--	--	--
DEC.										
04...	0800	14.0	250	4050	2730	25	30	41	55	74
04...	0840	13.0	830	3170	7100	18	23	32	35	43
04...	0855	12.0	820	3560	7880	28	31	36	51	63
04...	1110	13.0	1210	8780	28700	32	36	48	60	73
04...	1300	--	1060	10000	28600	29	34	46	58	72
FEB.										
03...	0910	10.0	321	1020	884	19	22	28	35	43
03...	1615	13.0	147	831	330	24	30	36	43	49
06...	1150	18.0	22	112	6.7	--	--	--	--	--
13...	1145	15.0	60	155	25	--	--	--	--	--
MAR.										
08...	1010	15.0	141	694	264	33	40	48	53	58
22...	1000	13.0	256	1080	746	24	27	36	44	53
APR.										
09...	0600	10.0	64	428	74	22	30	37	40	43

DATE	SUS. SED. FALL DIAM. % FINER THAN .062 MM	SUS. SED. SIEVE DIAM. % FINER THAN .062 MM	SUS. SED. FALL DIAM. % FINER THAN .125 MM	SUS. SED. SIEVE DIAM. % FINER THAN .125 MM	SUS. SED. FALL DIAM. % FINER THAN .250 MM	SUS. SED. SIEVE DIAM. % FINER THAN .250 MM	SUS. SED. FALL DIAM. % FINER THAN .500 MM	SUS. SED. SIEVE DIAM. % FINER THAN .500 MM	SUS. SED. SIEVE DIAM. % FINER THAN 1.00 MM	SUS. SED. SIEVE DIAM. % FINER THAN 2.00 MM
OCT.										
29...	--	66	--	68	--	77	--	88	98	100
DEC.										
04...	91	--	99	--	100	--	--	--	--	--
04...	--	48	--	68	--	92	--	99	100	--
04...	78	--	94	--	100	--	--	--	--	--
04...	84	--	93	--	99	--	100	--	--	--
04...	82	--	95	--	100	--	--	--	--	--
FEB.										
03...	--	55	--	77	--	93	--	100	--	--
03...	54	--	66	--	83	--	100	--	--	--
06...	--	73	--	75	--	85	--	99	100	--
13...	--	60	--	74	--	92	--	100	--	--
MAR.										
08...	64	--	78	--	96	--	100	--	--	--
22...	64	--	80	--	96	--	100	--	--	--
APR.										
09...	47	--	65	--	97	--	100	--	--	--

11078100 SANTA ANA RIVER AT ADAMS AVENUE, NEAR COSTA MESA, CALIF.

LOCATION.--Lat 33°40'19", long 117°56'42", on line between secs.5 and 8, T.6 S., R.10 W., Orange County, 0.5 mi (0.8 km) east of Brookhurst Street and 1.3 mi (2.1 km) northwest of Fairview State Hospital near Costa Mesa.

DRAINAGE AREA.--1,700 mi^2 (4,403 km^2).

PERIOD OF RECORD.--October 1974 to September 1975.

GAGE.--Nonrecording gage. Altitude of gage is 12 ft (3.7 m), from topographic map.

EXTREMES.--Current year: Maximum discharge, 5,100 ft^3/s (144 m^3/s) Dec. 4 (gage height, 8.30 ft or 2.53 m); no flow most of year.

REMARKS.--Records poor. Discharge is computed from nonrecording gage readings made during periods of flow.

DISCHARGE, IN CUBIC FEET PER SECOND, WATER YEAR OCTOBER 1974 TO SEPTEMBER 1975
MEAN VALUES

DAY	OCT	NOV	DEC	JAN	FEB	MAR	APR	MAY	JUN	JUL	AUG	SEP
1			0		0	0	0					
2			0		0	0	0					
3			0		127	0	0					
4			784		41	0	0					
5			261		25	3.0	2.7					
6			256		5.7	89	9.3					
7			16		12	2.7	.50					
8			1.3		9.6	228	4.6					
9			0		93	73	113					
10			0		68	153	1.5					
11			0		18	71	.90					
12			0		30	12	3.2					
13			0		48	4.2	.50					
14			0		15	53	0					
15			0		3.5	10	0					
16			0		.10	7.8	.20					
17			0		5.0	6.0	4.4					
18			0		1.0	5.1	1.2					
19			0		0	3.9	.40					
20			0		0	1.3	0					
21			0		0	1.0	0					
22			0		0	48	0					
23			0		0	12	0					
24			0		0	20	0					
25			0		0	14	0					
26			0		0	9.5	0					
27			0		0	1.2	0					
28			27		0	0	0					
29			95		---	0	0					
30			2.0		---	0	0					
31		---	.30		---	0	---		---			---
TOTAL	0	0	1442.60	0	501.90	828.7	142.40	0	0	0	0	0
MEAN	0	0	46.5	0	17.9	26.7	4.75	0	0	0	0	0
MAX	0	0	784	0	127	228	113	0	0	0	0	0
MIN	0	0	0	0	0	0	0	0	0	0	0	0
AC-FT	0	0	2860	0	996	1640	282	0	0	0	0	0

CAL YR 1974 TOTAL 6403.60 MEAN 17.5 MAX 1170 MIN 0 AC-FT 12700
WTR YR 1975 TOTAL 2915.60 MEAN 7.99 MAX 784 MIN 0 AC-FT 5780

11078100 SANTA ANA RIVER AT ADAMS AVENUE, NEAR COSTA MESA, CALIF.--Continued

PERIOD OF RECORD.--Water temperatures: October 1973 to current year.
Sediment records: October 1973 to current year.

EXTREMES.--Current year:
Sediment concentrations: Maximum daily, 4,150 mg/l Dec. 4; minimum daily, no flow for many days.
Sediment discharge: Maximum daily, 16,700 tons (15,200 tonnes) Dec. 4; minimum daily, 0 tons (0 tonnes) on many days.
Period of record:
Sediment concentrations: Maximum daily, 10,200 mg/l Jan. 9, 1974; minimum daily, no flow for many days each year.
Sediment discharge: Maximum daily, 27,800 tons (25,200 tonnes) Jan. 9, 1974; minimum daily, 0 tons (0 tonnes) on many days each year.

REMARKS.--Sediment table omitted for period of no flow during July to September.

TEMPERATURE (DEG. C) OF WATER, WATER YEAR OCTOBER 1974 TO SEPTEMBER 1975
(ONCE-DAILY)

DAY	OCT	NOV	DEC	JAN	FEB	MAR	APR	MAY	JUN	JUL	AUG	SEP
1			---		---	---	---					
2			---		---	---	---					
3			---		14.0	---	---					
4			14.0		9.5	---	---					
5			14.5		11.0	---	---					
6			10.0		19.0	12.0	9.0					
7			17.0		---	20.0	7.0					
8			---		---	13.0	10.5					
9			---		13.5	---	10.0					
10			---		12.0	14.5	9.5					
11			---		21.5	9.0	10.5					
12			---		---	8.0	13.0					
13			---		12.0	---	19.0					
14			---		12.0	16.0	---					
15			---		---	---	---					
16			---		---	15.0	---					
17			---		---	16.5	9.5					
18			---		---	---	8.0					
19			---		---	---	13.0					
20			---		---	15.0	---					
21			---		---	10.0	---					
22			---		---	13.0	---					
23			---		---	13.0	---					
24			---		---	22.0	---					
25			---		---	14.0	---					
26			---		---	19.5	---					
27			---		---	---	---					
28			12.0		---	---	---					
29			8.0		---	---	---					
30			5.0		---	---	---					
31			---		---	---	---					
MEAN			---		---	---	---					

11078100 SANTA ANA RIVER AT ADAMS AVENUE, NEAR COSTA MESA, CALIF.--Continued

SUSPENDED-SEDIMENT DISCHARGE (TONS/DAY), WATER YEAR OCTOBER 1974 TO SEPTEMBER 1975

	OCTOBER			NOVEMBER			DECEMBER		
DAY	MEAN DISCHARGE (CFS)	MEAN CONCEN-TRATION (MG/L)	SEDIMENT DISCHARGE (TONS/DAY)	MEAN DISCHARGE (CFS)	MEAN CONCEN-TRATION (MG/L)	SEDIMENT DISCHARGE (TONS/DAY)	MEAN DISCHARGE (CFS)	MEAN CONCEN-TRATION (MG/L)	SEDIMENT DISCHARGE (TONS/DAY)
1							0	0	0
2							0	0	0
3							0	0	0
4							784	4150	16700
5							261	2760	2110
6							256	1370	1330
7							16	35	1.5
8							1.3	25	.09
9							0	0	0
10							0	0	0
11							0	0	0
12							0	0	0
13							0	0	0
14							0	0	0
15							0	0	0
16							0	0	0
17							0	0	0
18							0	0	0
19							0	0	0
20							0	0	0
21							0	0	0
22							0	0	0
23							0	0	0
24							0	0	0
25							0	0	0
26							0	0	0
27							0	0	0
28							27	227	31
29							95	780	309
30							2.0	45	.24
31							.30	20	.02
TOTAL	0	0	0	0	0	0	1442.60	---	20481.85

	JANUARY			FEBRUARY			MARCH		
DAY	MEAN DISCHARGE (CFS)	MEAN CONCEN-TRATION (MG/L)	SEDIMENT DISCHARGE (TONS/DAY)	MEAN DISCHARGE (CFS)	MEAN CONCEN-TRATION (MG/L)	SEDIMENT DISCHARGE (TONS/DAY)	MEAN DISCHARGE (CFS)	MEAN CONCEN-TRATION (MG/L)	SEDIMENT DISCHARGE (TONS/DAY)
1				0	0	0	0	0	0
2				0	0	0	0	0	0
3				127	840	502	0	0	0
4				41	360	53	0	0	0
5				25	155	12	3.0	65	.53
6				5.7	63	.97	89	810	237
7				12	90	2.9	2.7	170	22
8				9.6	75	1.9	228	1350	1470
9				93	502	247	73	380	111
10				68	155	38	153	560	418
11				18	28	1.4	71	220	60
12				30	110	8.9	12	45	1.5
13				48	150	30	4.2	18	.20
14				15	28	1.1	53	225	84
15				3.5	17	.16	10	30	.81
16				.10	10	0	7.8	25	.53
17				5.0	40	.54	6.0	35	.57
18				1.0	20	.05	5.1	28	.39
19				0	0	0	3.9	20	.21
20				0	0	0	1.3	8	.03
21				0	0	0	1.0	10	.03
22				0	0	0	48	290	101
23				0	0	0	12	67	3.0
24				0	0	0	20	45	2.4
25				0	0	0	14	20	.76
26				0	0	0	9.5	25	.64
27				0	0	0	1.2	15	.05
28				0	0	0	0	0	0
29				---	---	---	0	0	0
30				---	---	---	0	0	0
31				---	---	---	0	0	0
TOTAL	0	0	0	501.90	---	899.92	828.70	---	2514.65

11078100 SANTA ANA RIVER AT ADAMS AVENUE, NEAR COSTA MESA, CALIF.--Continued

SUSPENDED-SEDIMENT DISCHARGE (TONS/DAY), WATER YEAR OCTOBER 1974 TO SEPTEMBER 1975

	APRIL			MAY			JUNE		
DAY	MEAN DISCHARGE (CFS)	MEAN CONCEN-TRATION (MG/L)	SEDIMENT DISCHARGE (TONS/DAY)	MEAN DISCHARGE (CFS)	MEAN CONCEN-TRATION (MG/L)	SEDIMENT DISCHARGE (TONS/DAY)	MEAN DISCHARGE (CFS)	MEAN CONCEN-TRATION (MG/L)	SEDIMENT DISCHARGE (TONS/DAY)
1	0	0	0						
2	0	0	0						
3	0	0	0						
4	0	0	0						
5	2.7	55	.40						
6	9.3	140	7.3						
7	.50	12	.02						
8	4.6	160	36						
9	113	570	452						
10	1.5	12	.05						
11	.90	6	.03						
12	3.2	33	.45						
13	.50	6	.01						
14	0	0	0						
15	0	0	0						
16	.20	10	.01						
17	4.4	20	.24						
18	1.2	7	.02						
19	.40	5	.01						
20	0	0	0						
21	0	0	0						
22	0	0	0						
23	0	0	0						
24	0	0	0						
25	0	0	0						
26	0	0	0						
27	0	0	0						
28	0	0	0						
29	0	0	0						
30	0	0	0						
31	---	---	---						
TOTAL	142.40	---	496.54	0	0	0	0	0	0
YEAR	2915.60		24392.96						

SUMMARY OF WATER AND SEDIMENT DISCHARGE, WATER YEAR OCTOBER 1974 TO SEPTEMBER 1975

MONTH	WATER DISCHARGE CFS-DAYS	SUSPENDED SEDIMENT DISCHARGE TONS	BEDLOAD DISCHARGE TONS	TOTAL SEDIMENT DISCHARGE TONS
OCTOBER 1974	0.0	0.0	0	0
NOVEMBER ...	0.0	0.0	0	0
DECEMBER ...	1442.60	20481.85	3640	24100
JANUARY 1975	0.0	0.0	0	0
FEBRUARY ...	501.90	899.92	422	1320
MARCH	828.70	2514.65	991	3510
APRIL	142.40	496.54	143	640
MAY	0.0	0.0	0	0
JUNE	0.0	0.0	0	0
JULY	0.0	0.0	0	0
AUGUST	0.0	0.0	0	0
SEPTEMBER ..	0.0	0.0	0	0
TOTAL	2915.60	24392.96	5196	29570

11078100 SANTA ANA RIVER AT ADAMS AVENUE, NEAR COSTA MESA, CALIF.--Continued

PARTICLE-SIZE DISTRIBUTION OF SUSPENDED SEDIMENT, WATER YEAR OCTOBER 1974 TO SEPTEMBER 1975

DATE	TIME	TEMPERATURE (DEG C)	INSTANTANEOUS DISCHARGE (CFS)	SUSPENDED SEDIMENT (MG/L)	SUSPENDED SEDIMENT DISCHARGE (T/DAY)	SUS. SED. FALL DIAM. % FINER THAN .002 MM	SUS. SED. FALL DIAM. % FINER THAN .004 MM	SUS. SED. FALL DIAM. % FINER THAN .008 MM	SUS. SED. FALL DIAM. % FINER THAN .016 MM
DEC.									
29...	0830	8.0	128	1170	404	15	20	23	27
FEB.									
04...	0630	10.0	14	317	12	58	80	86	91
05...	1645	--	23	176	11	--	--	--	--
13...	1405	17.0	66	157	28	--	--	--	--
MAR.									
08...	0845	14.0	600	3480	5640	17	17	23	31
22...	1520	20.0	60	502	81	40	49	60	68
APR.									
09...	0515	10.0	210	669	379	26	33	42	49

DATE	SUS. SED. FALL DIAM. % FINER THAN .031 MM	SUS. SED. FALL DIAM. % FINER THAN .062 MM	SUS. SED. SIEVE DIAM. % FINER THAN .062 MM	SUS. SED. FALL DIAM. % FINER THAN .125 MM	SUS. SED. SIEVE DIAM. % FINER THAN .125 MM	SUS. SED. FALL DIAM. % FINER THAN .250 MM	SUS. SED. SIEVE DIAM. % FINER THAN .250 MM	SUS. SED. FALL DIAM. % FINER THAN .500 MM	SUS. SED. SIEVE DIAM. % FINER THAN .500 MM
DEC.									
29...	30	--	32	--	66	--	99	--	100
FEB.									
04...	92	--	93	--	95	--	99	--	100
05...	--	--	75	--	79	--	96	--	100
13...	--	--	70	--	81	--	98	--	100
MAR.									
08...	48	71	--	88	--	98	--	100	--
22...	73	78	--	88	--	100	--	--	--
APR.									
09...	56	66	--	85	--	99	--	100	--

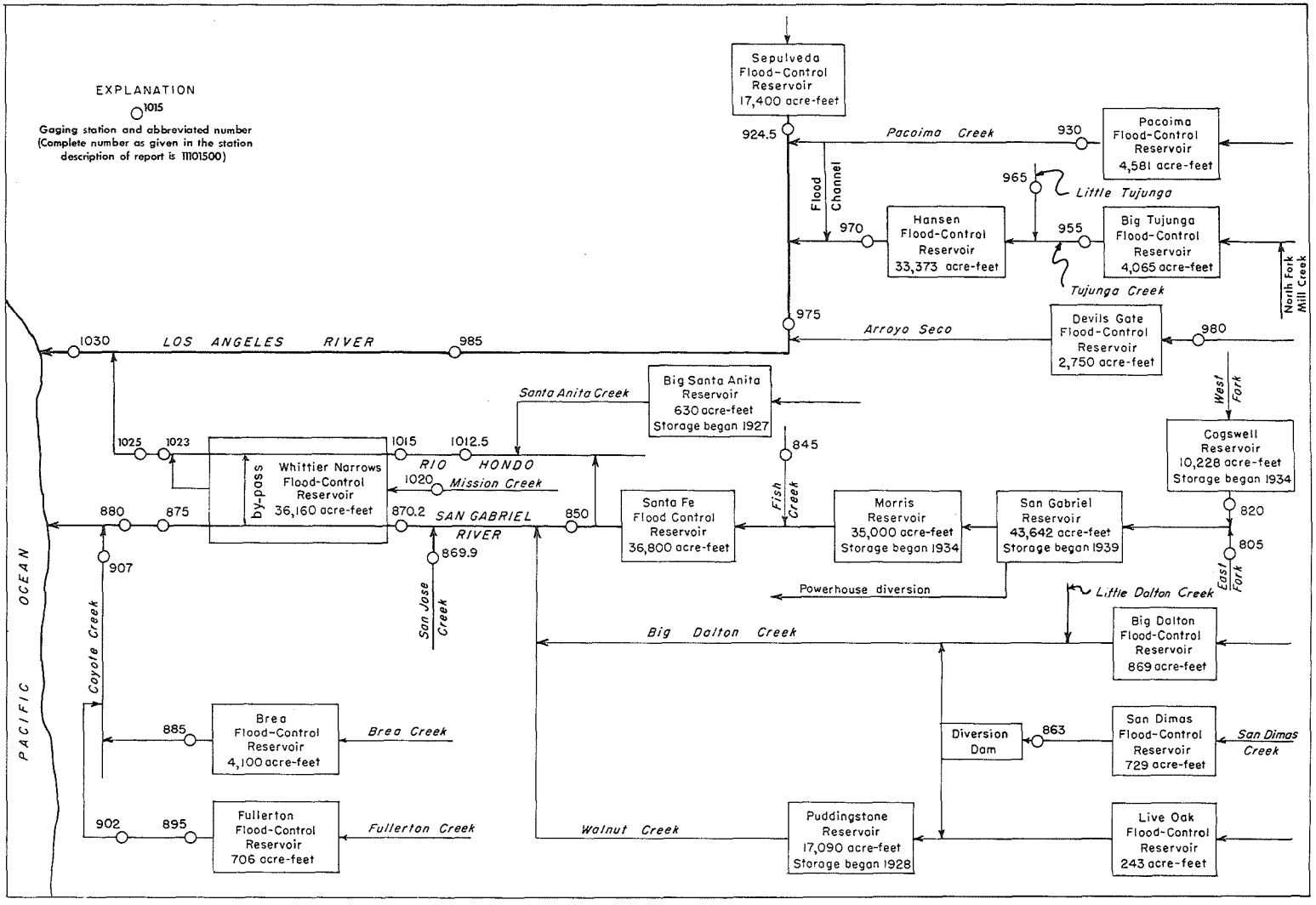

Figure 6.--Schematic diagram showing diversions and storage in San Gabriel and Los Angeles River basins.

11080500 EAST FORK SAN GABRIEL RIVER NEAR CAMP BONITA, CALIF.

LOCATION.--Lat 34°14'09", long 117°48'18", in NE¼NE¼ sec.27, T.2 N., R.9 W., Los Angeles County, on right bank 1,600 ft (400 m) upstream from mouth of Graveyard Canyon, 2.5 mi (4.0 km) upstream from confluence with West Fork, and 2.5 mi (4.0 km) west of Camp Bonita.

DRAINAGE AREA.--84.6 mi^2 (219.1 km^2).

PERIOD OF RECORD.--December 1932 to current year. Prior to 1940, published as San Gabriel River near Camp Bonita.

GAGE.--Water-stage recorder. Datum of gage is 1,567.04 ft (477.634 m) above mean sea level (levels by Los Angeles County Flood Control District). Prior to Dec. 10, 1938, at site 0.6 mi (1.0 km) downstream at different datum.

AVERAGE DISCHARGE.--42 years (1933-75), 68.5 ft^3/s (1.940 m^3/s), 49,630 acre-ft/yr (61.2 hm^3/yr).

EXTREMES.--Current year: Maximum discharge, 269 ft^3/s (7.62 m^3/s) Mar. 6 (gage height, 9.31 ft or 2.838 m); minimum daily, 8.4 ft^3/s (0.24 m^3/s) Sept. 9.
Period of record: Maximum discharge, 46,000 ft^3/s (1,300 m^3/s) Mar. 2, 1938, from rating curve extended above 21,300 ft^3/s (603 m^3/s), computed by Geological Survey; minimum, 1.5 ft^3/s (0.042 m^3/s) Oct. 1, 1934.

REMARKS.--Records fair. No regulation or diversion above station. See schematic diagram of San Gabriel and Los Angeles River basins.

COOPERATION.--Records furnished by Los Angeles County Flood Control District.

DISCHARGE, IN CUBIC FEET PER SECOND, WATER YEAR OCTOBER 1974 TO SEPTEMBER 1975
MEAN VALUES

DAY	OCT	NOV	DEC	JAN	FEB	MAR	APR	MAY	JUN	JUL	AUG	SEP
1	9.0	13	11	11	10	18	55	51	27	21	15	11
2	10	15	11	11	11	18	52	52	27	19	15	11
3	10	14	11	11	32	18	52	54	28	20	15	10
4	11	13	70	11	23	18	52	57	24	23	15	10
5	11	13	42	11	21	23	57	56	23	23	15	9.6
6	11	13	30	11	19	119	54	54	23	21	15	9.3
7	15	13	24	11	19	66	44	54	20	21	15	9.0
8	17	12	20	11	19	101	43	54	21	21	15	8.7
9	14	11	18	11	38	80	47	55	22	22	14	8.4
10	15	11	17	11	52	70	48	60	22	22	14	8.7
11	12	11	16	11	33	66	49	60	22	22	14	8.7
12	12	10	14	11	28	50	47	60	22	22	14	9.3
13	13	10	13	11	26	51	48	63	22	20	14	10
14	13	10	12	11	25	67	52	62	22	21	11	10
15	14	11	12	11	24	64	54	62	21	22	10	10
16	13	11	11	11	24	64	52	62	22	20	13	11
17	13	11	11	10	23	64	51	58	21	19	14	11
18	12	12	11	10	22	64	46	57	20	18	12	11
19	12	12	11	10	22	65	43	56	20	16	12	11
20	12	12	10	10	21	66	40	57	20	16	12	11
21	12	12	10	10	20	67	38	54	21	16	11	11
22	12	12	11	10	19	71	40	51	20	16	11	11
23	12	12	11	10	19	67	38	47	21	15	11	12
24	12	11	11	10	19	65	40	45	21	15	11	11
25	12	11	10	9.6	19	69	43	46	20	15	11	11
26	13	11	9.6	9.0	19	68	42	40	19	14	11	11
27	13	10	9.6	10	19	66	42	37	22	14	11	11
28	19	10	16	11	19	62	44	36	21	15	11	11
29	17	10	14	10	---	60	46	34	20	16	11	11
30	14	11	13	11	---	55	49	34	20	15	11	11
31	14	---	12	11	---	55	---	33	---	15	11	---
TOTAL	399.0	348	502.2	327.6	645	1857	1408	1601	654	575	395	309.7
MEAN	12.9	11.6	16.2	10.6	23.0	59.9	46.9	51.6	21.8	18.5	12.7	10.3
MAX	19	15	70	11	52	119	57	63	28	23	15	12
MIN	9.0	10	9.6	9.0	10	18	38	33	19	14	10	8.4
AC-FT	791	690	996	650	1280	3680	2790	3180	1300	1140	783	614

CAL YR 1974 TOTAL 15188.2 MEAN 41.6 MAX 224 MIN 9.0 AC-FT 30130
WTR YR 1975 TOTAL 9021.5 MEAN 24.7 MAX 119 MIN 8.4 AC-FT 17890

11082000 WEST FORK SAN GABRIEL RIVER AT CAMP RINCON, CALIF.

LOCATION.--Lat 34°14'28", long 117°51'45", Los Angeles County, in Angeles National Forest, on right bank 0.2 mi (0.3 km) upstream from Camp Rincon, 0.5 mi (0.8 km) downstream from North Fork, and 6 mi (10 km) downstream from Cogswell Dam.

DRAINAGE AREA.--104 mi^2 (269 km^2).

PERIOD OF RECORD.--October 1927 to current year.

GAGE.--Water-stage recorder. Datum of gage is 1,474.94 ft (449.562 m) above mean sea level (levels by Los Angeles County Flood Control District). See WSP 1735 for history of changes prior to July 3, 1941.

AVERAGE DISCHARGE.--48 years, 67.1 ft^3/s (1.900 m^3/s), 48,610 acre-ft/yr (59.9 hm^3/yr).

EXTREMES.--Current year: Maximum discharge, 523 ft^3/s (14.8 m^3/s) Mar. 6 (gage height, 15.55 ft or 4.740 m); minimum daily, 11 ft^3/s (0.31 m^3/s) Sept. 18.
Period of record: Maximum discharge, 34,000 ft^3/s (963 m^3/s), estimated, Mar. 2, 1938; no flow at times in 1928-29.

REMARKS.--Flow partly regulated by Cogswell flood-control reservoir since 1934, capacity, 9,339 acre-ft (11.5 hm^3). No diversion above station. See schematic diagram of San Gabriel and Los Angeles River basins.

COOPERATION.--Records fair. Records furnished by Los Angeles County Flood Control District.

DISCHARGE, IN CUBIC FEET PER SECOND, WATER YEAR OCTOBER 1974 TO SEPTEMBER 1975
MEAN VALUES

DAY	OCT	NOV	DEC	JAN	FEB	MAR	APR	MAY	JUN	JUL	AUG	SEP
1	26	49	13	17	15	15	28	46	26	16	32	25
2	26	49	13	16	16	15	26	44	26	16	32	26
3	26	49	14	16	56	15	23	42	26	16	32	26
4	28	47	95	16	35	15	23	44	26	15	32	25
5	29	47	20	16	28	21	38	41	26	14	33	25
6	29	46	20	16	22	175	44	41	25	14	33	25
7	32	44	20	16	20	116	33	39	23	16	33	25
8	32	44	19	16	20	164	32	38	23	16	35	26
9	29	42	18	16	47	79	44	36	22	15	33	28
10	29	42	18	16	52	100	42	36	21	14	32	28
11	28	42	17	16	35	93	54	35	20	13	32	28
12	26	41	17	17	29	72	46	35	20	13	32	28
13	26	41	17	17	26	68	49	35	20	12	33	28
14	26	41	16	17	25	88	52	36	20	12	32	26
15	26	41	16	16	25	66	60	39	20	12	33	28
16	25	41	16	16	25	60	58	41	20	12	32	35
17	25	41	16	16	23	52	60	38	21	12	32	27
18	25	41	16	16	22	49	60	39	22	13	32	11
19	26	41	16	16	22	49	58	41	23	12	32	40
20	26	41	16	16	21	47	56	44	21	12	29	32
21	26	41	15	15	20	46	58	41	20	12	30	32
22	26	33	15	15	20	54	60	41	20	12	28	32
23	30	15	15	15	19	46	58	38	19	15	28	32
24	28	14	15	15	17	41	56	36	19	30	26	32
25	35	13	15	15	17	42	58	33	19	32	28	30
26	47	13	15	15	16	41	54	30	18	30	28	32
27	47	13	15	15	16	36	50	32	17	30	26	32
28	56	13	28	16	15	33	49	30	16	30	26	33
29	52	13	25	14	---	32	49	28	16	32	28	33
30	49	13	19	15	---	29	47	28	16	32	26	33
31	49	---	18	16	---	29	---	26	---	32	23	---
TOTAL	990	1051	608	490	704	1788	1425	1153	631	562	943	863
MEAN	31.9	35.0	19.6	15.8	25.1	57.7	47.5	37.2	21.0	18.1	30.4	28.8
MAX	56	49	95	17	56	175	60	46	26	32	35	40
MIN	25	13	13	14	15	15	23	26	16	12	23	11
AC-FT	1960	2080	1210	972	1400	3550	2830	2290	1250	1110	1870	1710

CAL YR 1974 TOTAL 18421 MEAN 50.5 MAX 679 MIN 13 AC-FT 36540
WTR YR 1975 TOTAL 11208 MEAN 30.7 MAX 175 MIN 11 AC-FT 22230

11082800 SAN GABRIEL RIVER AT AZUSA POWERHOUSE, AT AZUSA, CALIF.

LOCATION.--Lat 34°09'18", long 117°54'26', in NE¼SE¼ sec.22, T.1 N., R.10 W., Los Angeles County, at tailrace of Azusa Powerhouse, and 1 mi (2 km) north of Azusa.

PERIOD OF RECORD.--Chemical analyses: December 1907 to December 1908, October 1966 to current year.

REMARKS.--Chemical-quality records furnished by California Department of Water Resources. Records of discharge furnished by Los Angeles County Flood Control District.

WATER QUALITY DATA, WATER YEAR OCTOBER 1974 TO SEPTEMBER 1975

DATE	TIME	INSTANTANEOUS DISCHARGE (CFS)	DISSOLVED IRON (FE) (UG/L)	DISSOLVED CALCIUM (CA) (MG/L)	DISSOLVED MAGNESIUM (MG) (MG/L)	DISSOLVED SODIUM (NA) (MG/L)	DISSOLVED POTASSIUM (K) (MG/L)	BICARBONATE (HCO3) (MG/L)	CARBONATE (CO3) (MG/L)	ALKALINITY AS CACO3 (MG/L)	DISSOLVED SULFATE (SO4) (MG/L)
OCT.											
23...	1245	76	--	42	11	10	3.1	176	0	144	24
NOV.											
22...	1200	.00	--	50	10	16	3.1	174	4	149	39
DEC.											
19...	1300	25	--	46	10	10	2.7	181	0	148	28
JAN.											
24...	1100	35	--	48	11	11	3.1	192	0	157	32
FEB.											
20...	1200	34	--	45	12	10	3.1	174	0	143	31
MAR.											
27...	1200	35	--	43	9.6	9.6	2.7	164	0	135	26
APR.											
25...	1115	74	--	44	10	9.2	2.3	169	0	139	25
MAY											
22...	0930	70	0	46	9.4	6.9	2.3	154	2	130	30
JUNE											
26...	1110	70	--	43	9.8	6.9	2.3	160	0	131	23
JULY											
25...	1100	69	--	41	9.8	8.7	2.7	166	0	136	25
AUG.											
28...	1120	68	--	35	11	9.0	2.7	154	0	126	27
SEP.											
25...	1115	70	--	38	11	9.6	3.1	168	0	138	27

DATE	DISSOLVED CHLORIDE (CL) (MG/L)	DISSOLVED FLUORIDE (F) (MG/L)	TOTAL NITRATE (N) (MG/L)	DISSOLVED SOLIDS (RESIDUE AT 180 C) (MG/L)	DISSOLVED SOLIDS (TONS PER AC-FT)	HARDNESS (CA,MG) (MG/L)	NONCARBONATE HARDNESS (MG/L)	PERCENT SODIUM	SODIUM ADSORPTION RATIO	SPECIFIC CONDUCTANCE (MICROMHOS)	PH (UNITS)
OCT.											
23...	6.4	.4	.00	197	.27	152	8	12	.4	300	8.1
NOV.											
22...	10	.4	.70	220	.30	167	18	17	.5	340	8.3
DEC.											
19...	3.9	.4	.11	208	.28	159	11	12	.3	295	8.4
JAN.											
24...	5.0	.5	.00	238	.32	166	8	12	.4	300	8.4
FEB.											
20...	4.2	.5	.27	222	.30	161	18	12	.3	300	8.4
MAR.											
27...	4.2	.4	.61	157	.21	147	12	12	.3	275	8.1
APR.											
25...	3.9	.4	.56	188	.26	150	11	12	.3	260	8.2
MAY											
22...	3.9	.4	.00	197	.27	154	24	9	.2	325	8.1
JUNE											
26...	5.3	.4	.52	196	.27	149	18	9	.2	300	8.0
JULY											
25...	2.8	.4	.23	195	.27	143	7	11	.3	270	8.0
AUG.											
28...	3.9	.4	.05	176	.24	132	6	13	.3	300	8.0
SEP.											
25...	3.2	.5	.00	197	.27	142	4	13	.4	300	8.2

11082800 SAN GABRIEL RIVER AT AZUSA POWERHOUSE, AT AZUSA, CALIF.--Continued

WATER QUALITY DATA, WATER YEAR OCTOBER 1974 TO SEPTEMBER 1975

DATE	TEMPER-ATURE (DEG C)	TUR-BID-ITY (JTU)	DIS-SOLVED OXYGEN (MG/L)	DIS-SOLVED ARSENIC (AS) (UG/L)	DIS-SOLVED BORON (B) (UG/L)	DIS-SOLVED CAD-MIUM (CD) (UG/L)	DIS-SOLVED COPPER (CU) (UG/L)	DIS-SOLVED LEAD (PB) (UG/L)	TOTAL MERCURY (HG) (UG/L)	DIS-SOLVED ZINC (ZN) (UG/L)
OCT. 23...	18.0	4	9.5	--	90	--	--	--	--	--
NOV. 22...	14.0	4	11.3	--	70	--	--	--	--	--
DEC. 19...	11.0	3	12.2	--	10	--	--	--	--	--
JAN. 24...	10.0	3	13.0	--	40	--	--	--	--	--
FEB. 20...	10.0	2	11.1	--	50	--	--	--	--	--
MAR. 27...	11.5	4	12.0	--	80	--	--	--	--	--
APR. 25...	12.0	3	10.8	--	100	--	--	--	--	--
MAY 22...	14.5	0	10.3	0	70	0	0	0	.1	20
JUNE 26...	18.5	0	9.3	--	0	--	--	--	--	--
JULY 25...	20.5	1	9.4	--	50	--	--	--	--	--
AUG. 28...	22.5	4	8.4	--	80	--	--	--	--	--
SEP. 25...	21.5	4	8.3	--	50	--	--	--	--	--

11084500 FISH CREEK NEAR DUARTE, CALIF.

LOCATION.--Lat 34°09'57", long 117°55'24", in SW¼SW¼SW¼ sec.15, T.1 N., R.10 W., Los Angeles County, on left bank 0.8 mi (1.3 km) upstream from mouth of canyon, and 3.2 mi (5.1 km) northeast of Duarte.

DRAINAGE AREA.--6.36 mi^2 (16.47 km^2).

PERIOD OF RECORD.--July to September 1916, July 1917 to current year.

GAGE.--Water-stage recorder. Broad-crested weir since July 1917, restored in December 1938. Datum of gage is 905.9 ft (276.12 m) above mean sea level. See WSP 1315-B for history of changes prior to Dec. 7, 1938. Dec. 7, 1938, to Oct. 3, 1951, at datum 1.00 ft (0.305 m) higher.

AVERAGE DISCHARGE.--58 years (1917-75), 4.57 ft^3/s (0.130 m^3/s), 3,310 acre-ft/yr (4.08 hm^3/yr).

EXTREMES.--Current year: Maximum discharge, 56 ft^3/s (1.59 m^3/s) Dec. 4 (gage height, 2.48 ft or 0.756 m); minimum daily, 0.20 ft^3/s (0.006 m^3/s) Sept. 23-26.
Period of record: Maximum discharge, 13,000 ft^3/s (368 m^3/s) Jan. 25, 1969 (gage height, 11.98 ft or 3.652 m, from inside gage), from rating curve extended above 1,100 ft^3/s (31.2 m^3/s) on basis of slope-area measurement of maximum flow; maximum gage height, about 14.5 ft (4.42 m) Feb. 11, 16, 1959 (from debris wave); no flow at times in some years.

REMARKS.--Records fair. No regulation or diversion above station. See schematic diagram of San Gabriel and Los Angeles River basins.

COOPERATION.--Records furnished by Los Angeles County Flood Control District.

DISCHARGE, IN CUBIC FEET PER SECOND, WATER YEAR OCTOBER 1974 TO SEPTEMBER 1975
MEAN VALUES

DAY	OCT	NOV	DEC	JAN	FEB	MAR	APR	MAY	JUN	JUL	AUG	SEP
1	.90	1.7	.90	1.7	1.4	2.1	3.5	3.3	1.6	.90	.70	.40
2	1.1	1.7	.90	1.7	1.3	2.1	3.1	3.2	1.7	.80	.60	.40
3	1.2	1.7	.90	1.8	10	2.1	3.1	3.1	1.6	.90	.60	.30
4	1.4	1.7	14	1.7	6.5	2.1	3.2	3.2	1.6	1.0	.60	.30
5	1.4	1.6	2.0	1.7	5.4	2.1	7.2	3.0	1.6	.90	.50	.30
6	1.3	1.6	1.6	1.7	4.9	30	8.1	2.9	1.5	.70	.50	.30
7	1.7	1.6	1.3	1.8	4.8	17	6.2	2.8	1.4	.70	.50	.30
8	1.9	1.7	1.3	1.8	4.6	26	6.0	2.7	1.5	.70	.50	.40
9	1.6	1.6	1.6	1.8	7.8	18	9.3	2.6	1.4	.80	.50	.50
10	1.4	1.5	1.6	1.7	6.6	20	9.0	2.5	1.4	.70	.50	.60
11	1.4	1.5	1.5	1.7	3.8	15	10	2.3	1.3	.70	.50	.60
12	1.2	1.5	1.4	1.6	3.2	10	8.8	2.3	1.2	.70	.50	.60
13	1.0	1.5	1.3	1.5	2.6	11	8.3	2.7	1.3	.70	.50	.60
14	.90	1.6	1.3	1.5	2.6	17	8.1	2.2	1.3	.70	.50	.50
15	.80	1.6	1.3	1.4	2.5	12	9.3	2.2	1.4	.70	.50	.50
16	.80	1.4	1.2	1.3	2.5	10	8.3	2.3	1.6	.60	.50	.40
17	.80	1.3	1.2	1.3	2.4	8.5	7.5	2.2	1.7	.70	.50	.40
18	.80	1.3	1.2	1.3	2.4	7.5	6.8	2.1	1.7	.80	.50	.40
19	1.0	1.3	1.2	1.3	2.3	6.4	6.0	2.3	1.8	.70	.60	.40
20	1.2	1.3	1.2	1.3	2.3	5.5	5.4	2.9	1.7	.70	.60	.40
21	1.4	1.3	1.1	1.3	2.3	5.0	5.0	2.4	1.7	.70	.60	.40
22	1.5	1.3	1.1	1.3	2.2	9.9	4.9	2.2	1.6	.70	.60	.30
23	1.6	1.2	1.2	1.3	2.3	6.2	4.8	2.1	1.5	.70	.50	.20
24	1.6	1.1	1.3	1.3	2.3	5.0	4.4	2.1	1.6	.70	.40	.20
25	1.4	1.1	1.3	1.2	2.2	5.5	4.7	2.1	1.4	.70	.40	.20
26	1.6	1.1	1.2	1.0	2.2	4.6	4.0	1.9	1.0	.70	.40	.20
27	1.7	1.1	1.2	.90	2.2	4.1	3.7	1.7	1.2	.70	.40	.30
28	5.0	1.0	2.3	1.3	2.1	3.8	3.6	1.5	1.3	.70	.40	.40
29	2.3	1.0	2.3	1.3	---	3.5	3.4	1.4	1.1	.70	.40	.40
30	1.8	.90	1.8	1.4	---	3.3	3.3	1.4	1.1	.80	.40	.50
31	1.7	---	1.7	1.4	---	3.4	---	1.4	---	.80	.40	---
TOTAL	45.40	41.80	55.40	45.30	97.7	278.7	179.0	73.0	43.8	23.00	15.60	11.70
MEAN	1.46	1.39	1.79	1.46	3.49	8.99	5.97	2.35	1.46	.74	.50	.39
MAX	5.0	1.7	14	1.8	10	30	10	3.3	1.8	1.0	.70	.60
MIN	.80	.90	.90	.90	1.3	2.1	3.1	1.4	1.0	.60	.40	.20
AC-FT	90	83	110	90	194	553	355	145	87	46	31	23

CAL YR 1974 TOTAL 1627.40 MEAN 4.46 MAX 234 MIN .50 AC-FT 3230
WTR YR 1975 TOTAL 910.40 MEAN 2.49 MAX 30 MIN .20 AC-FT 1810

11085000 SAN GABRIEL RIVER BELOW SANTA FE DAM, NEAR BALDWIN PARK, CALIF.

LOCATION.--Lat 34°06'44", long 117°58'07", in SE¼NE¼SW¼ sec.6, T.1 S., R.10 W., Los Angeles County, on left bank at stilling basin of outlet of Santa Fe flood-control dam, 500 ft (152 m) downstream from axis of dam, and 1.7 mi (2.7 km) north of Baldwin Park.

DRAINAGE AREA.--236 mi^2 (611 km^2).

PERIOD OF RECORD.--October 1942 to current year.

GAGE.--Water-stage recorder. Datum of gage is 400.00 ft (121.920 m) above mean sea level (levels by Corps of Engineers).

EXTREMES.--Current year: Maximum discharge, 427 ft^3/s (12.1 m^3/s) Apr. 22 (gage height, 11.30 ft or 3.444 m); no flow most of year.
Period of record: Maximum discharge, 30,900 ft^3/s (875 m^3/s) Jan. 26, 1969 (gage height, 22.20 ft or 6.767 m); no flow for several months in each year.

REMARKS.--Records good. Flow regulated by Cogswell and San Gabriel flood-control reservoirs, combined capacity, 53,870 acre-ft (66.4 hm^3), Morris Reservoir, capacity, 35,000 acre-ft (43.2 hm^3), and Santa Fe flood-control reservoir, capacity, 32,640 acre-ft (40.2 hm^3). Diversions above station for irrigation, power development, and ground-water replenishment. At times water diverted from side of stilling basin to headwaters of Rio Hondo; 464 acre-ft (572,000 m^3) was diverted during current year. See schematic diagram of San Gabriel and Los Angeles River basins.

COOPERATION.--Records of diversion to Rio Hondo furnished by Los Angeles County Flood Control District.

DISCHARGE, IN CUBIC FEET PER SECOND, WATER YEAR OCTOBER 1974 TO SEPTEMBER 1975
MEAN VALUES

DAY	OCT	NOV	DEC	JAN	FEB	MAR	APR	MAY	JUN	JUL	AUG	SEP
1							0	55				
2							0	5.7				
3							0	0				
4							0	0				
5							0	0				
6							0	0				
7							0	0				
8							0	0				
9							0	0				
10							0	0				
11							0	0				
12							0	0				
13							0	0				
14							0	0				
15							0	0				
16							0	0				
17							0	0				
18							0	0				
19							0	0				
20							0	0				
21							0	0				
22							54	0				
23							15	0				
24							15	0				
25							15	0				
26							15	0				
27							15	0				
28							55	0				
29					---		74	0				
30					---		68	0				
31		---			---		---	0	---			---
TOTAL	0	0	0	0	0	0	326	60.7	0	0	0	0
MEAN	0	0	0	0	0	0	10.9	1.96	0	0	0	0
MAX	0	0	0	0	0	0	74	55	0	0	0	0
MIN	0	0	0	0	0	0	0	0	0	0	0	0
AC-FT	0	0	0	0	0	0	647	120	0	0	0	0

CAL YR 1974 TOTAL 507.87 MEAN 1.39 MAX 85 MIN 0 AC-FT 1010
WTR YR 1975 TOTAL 386.70 MEAN 1.06 MAX 74 MIN 0 AC-FT 767

11086300 SAN DIMAS CREEK BELOW SAN DIMAS DAM, CALIF.

LOCATION.--Lat 34°09'10", long 117°46'18", in SW¼SE¼ sec.24, T.1 N., R.9 W., Los Angeles County, on left bank 1,000 ft (305 m) downstream from San Dimas Dam, and 3.7 mi (6.0 km) northeast of San Dimas.

DRAINAGE AREA.--16.3 mi^2 (42.2 km^2).

PERIOD OF RECORD.--October 1951 to current year. Prior to October 1956 monthly discharge only, published in WSP 1735.

GAGE.--Water-stage recorder and low-flow concrete control. Datum of gage is 1,325.0 ft (403.86 m) above mean sea level (levels by Los Angeles County Flood Control District).

EXTREMES.--Current year: Maximum discharge, 36 ft^3/s (1.02 m^3/s) May 13 (gage height, 0.71 ft or 0.216 m); minimum daily, 0.20 ft^3/s (0.006 m^3/s) Mar. 14-16, 23, May 7-12.
Period of record: Maximum discharge, 4,280 ft^3/s (121 m^3/s) Jan. 25, 1969 (gage height, 6.98 ft or 2.128 m), from rating curve extended above 600 ft^3/s (17.0 m^3/s) on basis of computation of maximum flow over dam; no flow at times in most years.

REMARKS.--Records poor. Flow regulated by San Dimas flood-control reservoir, capacity, 756 acre-ft (932,000 m^3) and at times by old water tunnel 150 ft (45 m) upstream. No diversion above station. See schematic diagram of San Gabriel and Los Angeles River basins.

COOPERATION.--Records furnished by Los Angeles County Flood Control District.

DISCHARGE, IN CUBIC FEET PER SECOND, WATER YEAR OCTOBER 1974 TO SEPTEMBER 1975
MEAN VALUES

DAY	OCT	NOV	DEC	JAN	FEB	MAR	APR	MAY	JUN	JUL	AUG	SEP
1	.90	.90	.80	.80	.80	.80	11	.40	14	.90	.60	1.0
2	.90	.90	.80	.80	.80	.80	5.4	.30	14	.90	.60	1.0
3	.90	.90	.80	.80	.90	.80	1.2	.30	13	.90	.80	1.0
4	.90	.60	1.2	.80	.80	.80	1.2	.30	13	.90	.90	1.0
5	.80	.60	.90	.90	.80	.80	1.2	.30	13	.90	1.0	1.0
6	.80	.40	.90	.90	.80	.90	1.2	.30	13	.90	1.0	1.0
7	.80	.40	.90	.90	.80	.80	1.0	.20	13	.90	1.0	1.0
8	.80	.30	.90	.90	.80	.90	1.0	.20	13	1.2	1.0	.90
9	6.8	.40	.90	.90	.90	.90	1.0	.20	13	1.2	1.0	.90
10	12	.40	.90	.90	.90	.90	1.0	.20	12	1.2	.80	.90
11	11	.40	.90	.70	.80	9.9	1.0	.20	6.9	1.2	.40	.90
12	11	.30	.90	.70	.80	18	1.0	.20	.60	1.0	1.2	.80
13	4.5	.30	.90	.70	.80	13	1.0	1.0	.60	.90	1.2	.80
14	.60	.30	.90	.70	.60	.20	1.0	.30	.60	.90	1.2	.90
15	.40	.30	.90	.70	6.4	.20	1.0	.30	.60	.90	1.2	1.0
16	.60	.30	.90	.70	11	.20	1.0	.30	.80	.90	1.2	.90
17	.80	.30	.90	.70	11	11	1.0	.30	.80	.90	1.2	1.2
18	.80	.40	.90	.70	13	17	1.0	.30	.80	.90	1.2	1.0
19	.80	.40	.90	.70	17	17	1.0	.40	.80	.90	1.2	.90
20	.80	.60	.80	.60	16	18	1.0	.40	.80	.90	1.2	.80
21	.80	.60	.80	.60	8.6	18	1.0	.40	.80	.80	1.2	.80
22	.80	.60	.80	.60	.80	6.8	1.0	.40	.80	.80	1.2	.80
23	.80	.60	.60	.60	.80	.20	1.0	.40	.80	.80	1.0	.80
24	.60	.60	.60	.60	.80	7.6	1.0	.40	.80	.80	1.0	.80
25	.80	.60	.60	.60	.80	13	.90	.30	.80	.80	1.0	.80
26	.90	.60	.60	.60	.80	13	.80	.30	.80	.80	1.0	.80
27	.90	.60	.60	.60	.80	13	.70	.30	.80	.80	1.0	.60
28	1.0	.60	.80	.60	.80	12	.60	.30	.80	.80	1.0	.80
29	.90	.80	.80	.80	---	12	.50	5.9	.80	.60	.90	.80
30	.80	.80	.80	.80	---	12	.40	14	.80	.60	.90	.80
31	.80	---	.80	.80	---	11	---	14	---	.60	.90	---
TOTAL	66.00	15.80	25.70	22.70	99.90	231.50	43.10	43.10	152.30	27.50	31.00	26.70
MEAN	2.13	.53	.83	.73	3.57	7.47	1.44	1.39	5.08	.89	1.00	.89
MAX	12	.90	1.2	.90	17	18	11	14	14	1.2	1.2	1.2
MIN	.40	.30	.60	.60	.60	.20	.40	.20	.60	.60	.40	.60
AC-FT	131	31	51	45	198	459	85	85	302	55	61	53

CAL YR 1974 TOTAL 1244.40 MEAN 3.41 MAX 49 MIN .20 AC-FT 2470
WTR YR 1975 TOTAL 785.30 MEAN 2.15 MAX 18 MIN .20 AC-FT 1560

11086990 SAN JOSE CREEK NEAR EL MONTE, CALIF.

LOCATION.--Lat 34°01'55", long 118°00'40", in El Monte Grant, Los Angeles County, on right bank of San Jose flood channel, 1,650 ft (503 m) upstream from Workman Mill Road, and 2.7 mi (4.3 km) southeast of El Monte.

DRAINAGE AREA.--87.8 mi^2 (227 km^2).

PERIOD OF RECORD.--October 1964 to current year.

GAGE.--Water-stage recorder. Datum of gage is 248.52 ft (75.749 m) above mean sea level (levels by Los Angeles County Flood Control District).

AVERAGE DISCHARGE.--11 years, 34.0 ft^3/s (0.963 m^3/s), 24,630 acre-ft/yr (30.4 hm^3/yr).

EXTREMES.--Current year: Maximum discharge, 9,600 ft^3/s (272 m^3/s) Dec. 4 (gage height, 7.86 ft or 2.396 m); minimum daily, 2.0 ft^3/s (0.057 m^3/s) Dec. 24.
Period of record: Maximum discharge, 10,200 ft^3/s (289 m^3/s) Jan. 24, 1967 (gage height, 6.80 ft or 2.073 m, from outside gage); no flow for some days in some years.

REMARKS.--Records poor. No regulation above station. One small diversion for ground-water recharge. At times effluent from city of Pomona's sewage reclamation plant is released to creek above Spadra and at Lemon Street. Bypass to the original San Jose Creek channel has been closed since Oct. 1, 1964. See schematic diagram of San Gabriel and Los Angeles River basins.

COOPERATION.--Records furnished by Los Angeles County Flood Control District.

DISCHARGE, IN CUBIC FEET PER SECOND, WATER YEAR OCTOBER 1974 TO SEPTEMBER 1975
MEAN VALUES

DAY	OCT	NOV	DEC	JAN	FEB	MAR	APR	MAY	JUN	JUL	AUG	SEP
1	14	16	143	17	13	140	135	85	7.8	8.3	12	10
2	14	15	140	17	30	135	135	14	7.8	8.4	12	10
3	13	66	17	63	564	135	135	11	7.3	9.8	12	9.8
4	14	146	1260	143	94	132	45	10	7.6	9.6	10	9.8
5	13	140	14	140	24	144	50	9.9	7.8	9.6	9.9	9.2
6	13	140	33	143	18	422	25	8.9	7.2	10	11	11
7	18	113	143	143	19	108	15	7.8	7.5	9.8	12	10
8	15	64	143	103	19	539	88	8.3	7.5	9.8	13	10
9	14	143	146	17	378	22	89	8.6	7.3	9.8	13	9.9
10	13	140	146	59	86	99	13	8.9	7.3	9.2	13	9.8
11	30	138	146	138	19	23	11	9.2	7.3	10	11	8.9
12	110	146	149	143	18	13	12	9.4	7.3	9.4	8.5	9.4
13	113	146	143	146	18	25	12	9.4	7.0	8.9	7.3	9.9
14	118	138	146	146	19	88	12	9.2	6.4	9.2	8.9	11
15	126	140	143	146	18	13	25	9.2	7.0	8.6	9.3	12
16	146	140	146	146	18	14	12	9.2	6.8	9.1	11	12
17	146	140	146	140	57	62	34	8.9	7.3	9.4	13	11
18	143	143	143	143	135	138	57	9.1	7.5	9.6	9.5	11
19	146	135	146	143	135	110	132	8.9	7.5	9.8	11	10
20	143	135	143	143	135	13	132	11	8.3	9.4	9.3	12
21	143	92	143	140	132	45	135	8.6	8.6	8.9	10	12
22	143	12	143	143	77	220	61	8.1	8.3	8.9	11	12
23	143	54	88	146	142	13	12	7.8	8.6	9.2	11	11
24	143	140	2.0	98	142	13	68	7.6	8.9	9.8	9.2	10
25	146	143	12	14	142	35	156	7.9	8.4	9.1	9.9	9.2
26	146	143	14	13	142	13	129	7.5	8.7	10	8.8	11
27	146	146	15	13	142	64	126	7.2	8.1	9.8	9.4	11
28	321	140	236	13	143	135	123	5.4	8.6	9.8	8.7	12
29	17	138	83	12	---	135	132	5.2	8.7	9.0	9.9	12
30	16	140	14	15	---	135	129	5.5	8.7	9.6	10	11
31	15	---	17	15	---	135	---	7.3	---	9.0	11	---
TOTAL	2741	3532	4403.0	2901	2879	3318	2240	344.0	233.1	290.8	325.6	317.9
MEAN	88.4	118	142	93.6	103	107	74.7	11.1	7.77	9.38	10.5	10.6
MAX	321	146	1260	146	564	539	156	85	8.9	10	13	12
MIN	13	12	2.0	12	13	13	11	5.2	6.4	8.3	7.3	8.9
AC-FT	5440	7010	8730	5750	5710	6580	4440	682	462	577	646	631

CAL YR 1974 TOTAL 20723.0 MEAN 56.8 MAX 1940 MIN 2.0 AC-FT 41100
WTR YR 1975 TOTAL 23525.4 MEAN 64.5 MAX 1260 MIN 2.0 AC-FT 46660

11087020 SAN GABRIEL RIVER ABOVE WHITTIER NARROWS DAM, CALIF.

LOCATION.--Lat 34°02'00", long 118°02'14", in La Puente Grant, Los Angeles County, on downstream side of bridge near center on Peck Road, 0.8 mi (1.3 km) downstream from San Jose flood channel, 1.2 mi (1.9 km) upstream from axis of Whittier Narrows Dam, and 1.8 mi (2.9 km) south of El Monte.

DRAINAGE AREA.--353 mi^2 (914 km^2).

PERIOD OF RECORD.--October 1955 to September 1957, October 1963 to current year.

GAGE.--Water-stage recorder. Altitude of gage is 220 ft (67 m), from topographic map.

EXTREMES.--Current year: Maximum discharge, 19,800 ft^3/s (561 m^3/s) Dec. 4 (gage height, 8.50 ft or 2.591 m); minimum daily, 0.09 ft^3/s (0.003 m^3/s) Aug. 29.
Period of record: Maximum discharge, 46,600 ft^3/s (1,320 m^3/s) Jan. 25, 1969 (gage height, 10.90 ft or 3.322 m); no flow for part of most years.

REMARKS.--Records good except day of questionable gage-height record, which is fair. Flow regulated by San Gabriel, Cogswell, and Santa Fe flood-control reservoirs, combined capacity, 90,670 acre-ft (112 hm^3), several small flood-control reservoirs, combined capacity, 19,100 acre-ft (23.6 hm^3), and Morris Reservoir, capacity, 35,000 acre-ft (43.2 hm^3). Many diversions above station for irrigation, power development, and ground-water replenishment. Colorado River water released to the San Gabriel River at a site 14.9 mi (24.0 km) upstream from gage, at Metropolitan Water District aqueduct crossing on San Dimas Creek for ground-water replenishment. Los Angeles County Flood Control District diverted 464 acre-ft (572,000 m^3) of water from San Gabriel River below Santa Fe Dam to Rio Hondo during current year. See schematic diagram of San Gabriel and Los Angeles River basins.

COOPERATION.--Records of diversion to Rio Hondo furnished by Los Angeles County Flood Control District.

DISCHARGE, IN CUBIC FEET PER SECOND, WATER YEAR OCTOBER 1974 TO SEPTEMBER 1975
MEAN VALUES

DAY	OCT	NOV	DEC	JAN	FEB	MAR	APR	MAY	JUN	JUL	AUG	SEP
1	10	9.4	133	9.4	10	121	122	253	170	198	85	70
2	6.4	10	136	8.9	10	116	121	183	174	220	89	64
3	7.0	12	21	42	1090	117	122	170	174	167	88	68
4	25	129	3220	124	22	115	93	167	179	96	86	73
5	111	123	58	125	16	140	64	166	184	93	85	73
6	115	122	37	126	8.2	594	44	163	184	91	82	75
7	116	109	191	125	8.7	220	19	160	184	89	71	74
8	18	50	193	93	8.3	915	96	162	181	88	62	69
9	37	132	195	11	558	29	174	158	184	90	73	61
10	112	134	195	43	156	172	9.5	164	198	90	87	77
11	93	137	197	122	13	23	12	163	197	91	84	74
12	117	139	201	124	8.4	10	70	162	195	89	85	76
13	116	139	195	127	7.9	12	66	167	197	87	86	76
14	117	138	200	127	8.7	142	69	166	201	91	82	76
15	122	144	197	128	7.0	10	87	93	200	85	86	76
16	117	143	199	128	6.2	12	10	169	195	86	87	77
17	115	144	201	126	35	41	43	167	196	88	85	75
18	117	138	201	128	118	116	42	167	194	88	86	75
19	117	135	200	128	122	104	113	155	198	92	83	74
20	115	134	200	128	123	10	113	174	194	90	85	77
21	117	108	199	128	123	29	114	146	194	90	84	77
22	116	17	196	128	63	342	62	160	193	60	81	76
23	118	56	145	128	119	11	7.9	161	188	10	89	74
24	116	137	20	93	123	8.5	45	133	183	10	88	109
25	120	141	1.5	16	121	46	137	133	198	30	39	213
26	118	141	15	9.9	122	11	115	131	171	85	4.2	227
27	117	142	24	9.2	121	42	144	128	154	80	.53	228
28	610	143	312	58	122	116	225	124	192	80	.21	230
29	12	142	144	14	---	118	273	124	194	80	.09	222
30	9.7	137	11	13	---	118	299	139	189	79	55	46
31	9.1	---	11	16	---	121	---	166	---	84	73	---
TOTAL	3166.2	3385.4	7448.5	2586.4	3250.4	3981.5	2911.4	4874	5635	2797	2171.03	2962
MEAN	102	113	240	83.4	116	128	97.0	157	188	90.2	70.0	98.7
MAX	610	144	3220	128	1090	915	299	253	201	220	89	230
MIN	6.4	9.4	1.5	8.9	6.2	8.5	7.9	93	154	10	.09	46
AC-FT	6280	6710	14770	5130	6450	7900	5770	9670	11180	5550	4310	5880

CAL YR 1974 TOTAL 57321.90 MEAN 157 MAX 5260 MIN 1.5 AC-FT 113700
WTR YR 1975 TOTAL 45168.83 MEAN 124 MAX 3220 MIN .09 AC-FT 89590

NOTE.--Questionable gage-height record Dec. 4.

11087040 SAN GABRIEL RIVER AT WHITTIER NARROWS, CALIF.

LOCATION.--Lat 34°01'25", long 118°03'11", in sec.5, T.2 S., R.11 W., Los Angeles County, 200 ft (60 m) from end of San Gabriel Boulevard (Siphon Road), upstream from Whittier Narrows Dam, and 2.5 mi (4.0 km) northeast of Montebello.

PERIOD OF RECORD.--Chemical analyses: October 1966 to current year.

REMARKS.--Chemical-quality records furnished by California Department of Water Resources. Records of discharge are given for San Gabriel River above Whittier Narrows Dam (sta 11087020).

WATER QUALITY DATA, WATER YEAR OCTOBER 1974 TO SEPTEMBER 1975

DATE	TIME	INSTANTANEOUS DISCHARGE (CFS)	DISSOLVED SULFATE (SO4) (MG/L)	DISSOLVED CHLORIDE (CL) (MG/L)	DISSOLVED SOLIDS (RESIDUE AT 180 C) (MG/L)	DISSOLVED SOLIDS (TONS PER AC-FT)	DISSOLVED SOLIDS (TONS PER DAY)
OCT.							
23...	0950	118	46	54	257	.35	81.9
NOV.							
22...	1000	20	60	57	319	.43	17.2
DEC.							
19...	1015	190	--	--	--	--	--
APR.							
25...	0900	206	56	51	270	.37	150
MAY							
22...	0810	170	292	93	739	1.01	339
JUNE							
26...	0900	190	57	58	259	.35	133
SEP.							
25...	0915	214	256	85	652	.89	377

DATE	HARDNESS (CA,MG) (MG/L)	SPECIFIC CONDUCTANCE (MICROMHOS)	PH (UNITS)	TEMPERATURE (DEG C)	TURBIDITY (JTU)	DISSOLVED OXYGEN (MG/L)
OCT.						
23...	115	430	7.6	16.5	5	9.3
NOV.						
22...	131	450	7.8	16.0	5	9.3
DEC.						
19...	--	440	7.8	10.0	--	11.0
APR.						
25...	121	390	7.8	13.5	24	10.1
MAY						
22...	339	1125	8.2	14.0	2	10.7
JUNE						
26...	131	480	8.4	18.5	2	11.1
SEP.						
25...	280	1050	8.2	20.5	6	8.5

11087500 SAN GABRIEL RIVER AT PICO, CALIF.

LOCATION.--Lat 34°00'47", long 118°03'48", in Paso de Bartolo Grant, Los Angeles County, on right levee 460 ft (140 m) downstream from San Gabriel River Parkway, 4,200 ft (1,280 m) downstream from axis of Whittier Narrows Dam, and 1.4 mi (2.3 km) northeast of Pico Rivera.

DRAINAGE AREA.--447 mi^2 (1,158 km^2).

PERIOD OF RECORD.--October 1928 to current year. Since 1954 Colorado River water released to San Gabriel River above station. Since 1954 records not equivalent.

GAGE.--Water-stage recorder. Datum of gage is 181.55 ft (55.336 m) above mean sea level. See WSP 1735 for history of changes prior to Mar. 6, 1952. Mar. 6, 1952, to Aug. 9, 1968, at bridge 0.5 mi (0.8 km) downstream at datum 9.05 ft (2.758 m) lower.

EXTREMES.--Current year: Maximum discharge, 7,520 ft^3/s (213 m^3/s) Dec. 4 (gage height, 6.21 ft or 1.892 m); minimum daily, 1.0 ft^3/s (0.028 m^3/s) Aug. 29.
Period of record: Maximum discharge, 22,700 ft^3/s (643 m^3/s) Mar. 2, 1938; no flow for periods in most years.

REMARKS.--Records poor. Flow regulated by Cogswell Reservoir since 1934 and San Gabriel flood-control reservoir since 1939, combined capacity, 46,087 acre-ft (56.8 hm^3), Morris Reservoir since 1934, capacity, 35,000 acre-ft (43.2 hm^3), Santa Fe flood-control reservoir since October 1942, capacity, 36,800 acre-ft (45.4 hm^3), Whittier Narrows flood-control reservoir since January 1956, capacity, 36,160 acre-ft (44.6 hm^3), and several small flood-control reservoirs, combined capacity, 19,100 acre-ft (23.6 hm^3). Diversions for irrigation, power development, and ground-water replenishment. For Colorado River water released to San Gabriel River for ground-water replenishment see sta 11087020. During the current year, 464 acre-ft (572,000 m^3) was diverted from the San Gabriel River below Santa Fe Dam to Rio Hondo. See schematic diagram of San Gabriel and Los Angeles River basins.

COOPERATION.--Records furnished by Los Angeles County Flood Control District.

DISCHARGE, IN CUBIC FEET PER SECOND, WATER YEAR OCTOBER 1974 TO SEPTEMBER 1975
MEAN VALUES

DAY	OCT	NOV	DEC	JAN	FEB	MAR	APR	MAY	JUN	JUL	AUG	SEP
1	11	4.4	78	3.5	3.0	3.5	4.0	116	71	84	67	58
2	5.0	3.4	84	4.0	3.0	3.5	4.0	102	57	71	71	54
3	3.4	23	30	4.0	926	3.5	4.0	92	42	52	73	57
4	3.4	50	2050	4.0	123	5.4	4.0	96	43	37	69	62
5	3.4	2.2	50	4.0	7.4	75	13	88	43	27	64	60
6	3.4	2.2	5.0	4.0	5.4	546	15	76	42	38	60	64
7	24	19	4.8	4.0	5.4	105	6.7	64	42	65	50	64
8	21	9.0	4.7	38	4.1	647	44	62	42	57	39	60
9	10	2.0	4.6	4.0	366	24	140	44	46	57	47	50
10	21	1.8	4.5	12	85	89	20	22	46	57	64	64
11	22	1.6	4.3	72	6.0	9.5	6.4	21	49	55	62	50
12	24	1.6	4.2	73	5.4	9.5	39	65	52	55	62	67
13	23	1.4	4.2	74	4.7	7.8	43	106	44	57	38	67
14	24	1.2	4.2	31	4.6	84	37	108	44	71	37	67
15	24	1.2	4.1	4.0	4.5	14	26	47	44	57	49	67
16	21	1.2	4.0	3.8	4.4	11	4.0	98	46	42	58	64
17	21	1.2	11	3.8	4.3	13	4.0	110	44	42	55	58
18	32	1.2	27	3.8	4.2	12	4.0	122	43	42	52	58
19	22	30	27	3.7	4.1	11	4.0	120	43	47	50	60
20	22	60	26	3.7	4.0	4.5	4.0	122	43	46	47	62
21	15	62	26	3.6	3.9	4.0	25	49	40	34	54	62
22	31	17	25	3.6	3.8	149	25	57	38	3.0	52	64
23	104	15	27	3.5	3.7	4.0	6.4	94	57	2.5	58	64
24	104	62	5.0	40	3.6	4.0	40	67	92	2.0	58	74
25	112	69	4.5	15	3.5	8.1	129	64	92	2.0	27	177
26	118	69	4.0	3.5	3.5	4.0	82	69	82	33	3.0	165
27	120	73	4.0	3.5	3.5	4.0	65	80	62	47	2.5	86
28	465	73	211	5.0	3.5	4.0	98	67	84	49	1.3	86
29	10	74	122	4.0	---	4.0	102	50	92	58	1.0	120
30	6.0	78	3.0	4.0	---	4.0	116	64	94	60	31	62
31	4.1	---	3.0	5.0	---	4.5	---	67	---	60	58	---
TOTAL	1429.7	809.6	2866.1	445.0	1603.5	1871.8	1114.5	2409	1659	1409.5	1459.8	2173
MEAN	46.1	27.0	92.5	14.4	57.3	60.4	37.2	77.7	55.3	45.5	47.1	72.4
MAX	465	78	2050	74	926	647	140	122	94	84	73	177
MIN	3.4	1.2	3.0	3.5	3.0	3.5	4.0	21	38	2.0	1.0	50
AC-FT	2840	1610	5680	883	3180	3710	2210	4780	3290	2800	2900	4310

CAL YR 1974 TOTAL 29944.0 MEAN 82.0 MAX 3640 MIN 1.2 AC-FT 59390
WTR YR 1975 TOTAL 19250.5 MEAN 52.7 MAX 2050 MIN 1.0 AC-FT 38180

11088000 SAN GABRIEL RIVER AT SPRING STREET, NEAR LOS ALAMITOS, CALIF.

LOCATION.--Lat 33°48'43", long 118°05'24", in SE¼SE¼NW¼ sec.24, T.4 S., R.12 W., Los Angeles County, on right levee 455 ft (139 m) upstream from Spring Street bridge, 1.3 mi (2.1 km) upstream from Coyote Creek, and 1.3 mi (2.1 km) northwest of Los Alamitos.

DRAINAGE AREA.--472 mi^2 (1,222 km^2).

PERIOD OF RECORD.--October 1927 to September 1951, October 1952 to current year. Monthly discharge only for October 1927 to September 1936, published in WSP 1315-B.

GAGE.-Water-stage recorder. Datum of gage is 11.87 ft (3.618 m) above mean sea level (levels by Los Angeles County Flood Control District). Prior to October 1952, at datum 4.82 ft (1.469 m) higher and October 1952 to Nov. 17, 1964, at site 455 ft (139 m) downstream at datum 0.38 ft (0.116 m) higher.

AVERAGE DISCHARGE.--47 years, 30.8 ft^3/s (0.872 m^3/s), 22,310 acre-ft/yr (27.5 hm^3/yr).

EXTREMES.--Current year: Maximum discharge, 7,190 ft^3/s (204 m^3/s) Dec. 4 (gage height, 7.99 ft or 2.435 m); minimum daily, 6.1 ft^3/s (0.17 m^3/s) Nov. 10.
Period of record: Maximum discharge, 27,000 ft^3/s (765 m^3/s), estimated, Mar. 2, 1938; no flow at times in some years.

REMARKS.--Records poor. Regulation and diversions same as sta 11087500. Additional diversion to percolation basin near Washington Boulevard and percolation basins in streambed. AVERAGE DISCHARGE represents flow to ocean during period of record regardless of upstream development. See schematic diagram of San Gabriel and Los Angeles River basins.

COOPERATION.--Records furnished by Los Angeles County Flood Control District.

DISCHARGE, IN CUBIC FEET PER SECOND, WATER YEAR OCTOBER 1974 TO SEPTEMBER 1975
MEAN VALUES

DAY	OCT	NOV	DEC	JAN	FEB	MAR	APR	MAY	JUN	JUL	AUG	SEP
1	29	32	22	46	63	39	39	32	14	16	24	27
2	33	27	17	46	59	39	39	28	15	31	50	31
3	33	9.0	36	48	1060	38	39	30	27	25	30	50
4	34	19	2190	47	101	42	37	18	12	19	25	49
5	32	29	65	45	37	95	45	17	13	12	40	31
6	13	32	53	49	40	509	50	34	13	15	30	29
7	21	31	51	49	40	90	37	24	14	15	38	27
8	16	31	52	46	39	654	59	32	14	17	40	20
9	16	29	51	49	278	72	75	32	15	23	32	19
10	16	6.1	50	50	106	106	35	32	14	27	32	21
11	20	14	50	47	40	51	40	20	14	13	31	18
12	20	29	51	46	40	43	38	19	14	16	45	17
13	24	31	55	48	36	42	37	29	12	22	46	32
14	15	27	62	50	38	57	38	36	36	15	30	16
15	34	32	46	50	37	41	46	32	18	16	35	17
16	36	40	40	42	36	42	40	33	9.8	29	32	18
17	38	25	42	50	38	42	51	44	12	28	26	34
18	39	17	42	49	41	42	41	20	12	25	18	33
19	39	40	41	47	40	40	40	15	13	27	14	46
20	22	39	46	51	40	43	41	20	13	20	12	46
21	21	40	46	50	40	41	42	32	13	14	15	24
22	35	40	40	52	41	189	41	32	13	36	30	20
23	34	37	45	53	39	42	36	29	13	32	23	20
24	36	24	47	54	41	39	41	21	14	35	20	31
25	37	15	42	50	44	40	43	14	27	29	17	40
26	32	32	44	49	44	39	42	14	25	21	14	46
27	13	38	45	50	42	40	42	14	25	10	12	41
28	270	42	380	42	40	39	44	14	30	14	14	20
29	21	38	43	47	---	39	36	19	15	34	18	14
30	32	40	42	43	---	38	36	25	14	31	39	21
31	32	---	55	50	---	40	---	24	---	19	26	---
TOTAL	1093	885.1	3891	1495	2540	2713	1270	785	493.8	686	858	858
MEAN	35.3	29.5	126	48.2	90.7	87.5	42.3	25.3	16.5	22.1	27.7	28.6
MAX	270	42	2190	54	1060	654	75	44	36	36	50	50
MIN	13	6.1	17	42	36	38	35	14	9.8	10	12	14
AC-FT	2170	1760	7720	2970	5040	5380	2520	1560	979	1360	1700	1700

CAL YR 1974 TOTAL 25750.1 MEAN 70.5 MAX 3690 MIN 6.1 AC-FT 51080
WTR YR 1975 TOTAL 17567.9 MEAN 48.1 MAX 2190 MIN 6.1 AC-FT 34850

NOTE.--No gage-height record Oct. 15 to Nov. 16.

11088500 BREA CREEK BELOW BREA DAM, NEAR FULLERTON, CALIF.

LOCATION.--Lat 33°53'16", long 117°55'32", in NE¼NE¼NE¼ sec.28, T.3 S., R.10 W., Orange County, on right bank 0.2 mi (0.3 km) downstream from Brea Dam, and 1 mi (2 km) north of Fullerton.

DRAINAGE AREA.--21.6 mi^2 (55.9 km^2).

PERIOD OF RECORD.--January 1942 to current year.

GAGE.--Water-stage recorder. V-notch sharp-crested weir since October 1946. Datum of gage is 196.67 ft (59.945 m) above mean sea level (levels by Corps of Engineers). Prior to Dec. 4, 1964, at datum 1.03 ft (0.314 m) higher.

AVERAGE DISCHARGE.--33 years, 1.23 ft^3/s (0.0348 m^3/s), 891 acre-ft/yr (1.10 hm^3/yr).

EXTREMES.--Current year: Maximum discharge, 599 ft^3/s (17.0 m^3/s) Dec. 4 (gage height, 5.64 ft or 1.719 m); minimum daily, 0.12 ft^3/s (0.003 m^3/s) June 25.
Period of record: Maximum discharge, 970 ft^3/s (27.5 m^3/s) Feb. 25, 1969 (gage height, 6.30 ft or 1.920 m), from rating curve extended above 340 ft^3/s (9.63 m^3/s); no flow for parts of some years.

REMARKS.--Records good to 3 ft^3/s (0.085 m^3/s) and fair above. Flow regulated by Brea flood-control reservoir, capacity, 4,100 acre-ft (5.06 hm^3). No diversion above station. Since August 1966 low flow mostly the result of irrigation waste water from golf course 0.8 mi (1.3 km) upstream. See schematic diagram of San Gabriel and Los Angeles River basins.

DISCHARGE, IN CUBIC FEET PER SECOND, WATER YEAR OCTOBER 1974 TO SEPTEMBER 1975
MEAN VALUES

DAY	OCT	NOV	DEC	JAN	FEB	MAR	APR	MAY	JUN	JUL	AUG	SEP
1	.25	.18	.19	.20	.27	.19	.21	.18	.21	.15	.30	.22
2	.25	.18	.20	.20	.21	.18	.16	.21	.16	.19	.19	.17
3	.29	.18	.28	.19	73	.28	.26	.20	.22	.24	.19	.21
4	.27	.19	140	.20	6.7	.21	.19	.26	.19	.27	.22	.16
5	.22	.19	2.2	.20	1.8	16	1.1	.25	.30	.20	.16	.21
6	.20	.22	.37	.19	.28	40	3.9	.18	.20	.27	.17	.20
7	.34	.23	.21	.20	.19	13	.68	.30	.20	.27	.19	.22
8	.24	.27	.18	.20	.18	77	8.9	.17	.17	.24	.20	.22
9	.18	.20	.27	.19	40	3.4	14	.32	.20	.32	.27	.21
10	.20	.21	.20	.19	6.9	5.5	.64	.18	.13	.34	.35	.15
11	.21	.24	.21	.18	.94	1.9	.24	.21	.24	.29	.39	.19
12	.25	.28	.17	.18	.34	.78	.19	.30	.22	.29	.17	.21
13	.23	.28	.19	.20	.24	1.5	.19	.20	.17	.23	.17	.17
14	.23	.25	.18	.19	.30	8.2	.19	.33	.18	.28	.24	.18
15	.23	.27	.18	.21	.19	.56	1.9	.22	.14	.32	.23	.15
16	.28	.24	.19	.24	.18	.56	.32	.26	.16	.35	.21	.19
17	.28	.21	.23	.20	.18	.39	.41	.24	.16	.39	.22	.16
18	.22	.27	.25	.19	.17	.22	.39	.28	.30	.37	.26	.19
19	.22	.20	.19	.27	.17	.19	.17	.17	.21	.29	.21	.16
20	.22	.28	.24	.49	.18	.18	.19	.26	.20	.22	.23	.22
21	.21	.21	.18	.47	.17	.22	.18	.21	.19	.36	.25	.21
22	.22	.22	.20	.31	.16	17	.18	.16	.19	.19	.21	.21
23	.22	.20	.18	.20	.18	.68	.41	.21	.21	.28	.20	.24
24	.24	.20	.21	.22	.19	.26	.26	.17	.15	.35	.21	.24
25	.24	.20	.30	.21	.24	.22	1.2	.18	.12	.26	.24	.21
26	.22	.20	.25	.21	.18	.48	.19	.17	.21	.32	.17	.21
27	.22	.23	.38	.27	.18	.18	.21	.21	.23	.24	.19	.17
28	35	.21	20	.19	.20	.17	.18	.18	.19	.37	.21	.22
29	.92	.20	9.7	.18	---	.17	.19	.18	.18	.25	.20	.26
30	.22	.18	.37	.59	---	.19	.21	.22	.21	.21	.19	.14
31	.19	---	.24	.35	---	.24	---	.17	---	.21	.20	---
TOTAL	42.71	6.62	178.14	7.51	133.92	190.05	37.44	6.78	5.84	8.56	6.84	5.90
MEAN	1.38	.22	5.75	.24	4.78	6.13	1.25	.22	.19	.28	.22	.20
MAX	35	.28	140	.59	73	77	14	.33	.30	.39	.39	.26
MIN	.18	.18	.17	.18	.16	.17	.16	.16	.12	.15	.16	.14
AC-FT	85	13	353	15	266	377	74	13	12	17	14	12

CAL YR 1974 TOTAL 1174.05 MEAN 3.22 MAX 202 MIN .15 AC-FT 2330
WTR YR 1975 TOTAL 630.31 MEAN 1.73 MAX 140 MIN .12 AC-FT 1250

11089500 FULLERTON CREEK BELOW FULLERTON DAM, NEAR BREA, CALIF.

LOCATION.--Lat 33°53'45", long 117°53'07", in NE¼NW¼SW¼ sec.24, T.3 S., R.10 W., Orange County, on left bank of outlet channel of Fullerton Dam, 1.6 mi (2.6 km) southeast of Brea.

DRAINAGE AREA.--4.94 mi^2 (12.79 km^2).

PERIOD OF RECORD.--October 1941 to current year.

GAGE.--Water-stage recorder. Altitude of gage is 250 ft (76 m), from topographic map. V-notch sharp-crested weir used Oct. 25, 1946, to Feb. 2, 1956. Prior to Dec. 3, 1971, at datum 3.00 ft (0.914 m) higher.

AVERAGE DISCHARGE.--13 years (1941-54), 0.19 ft^3/s (0.0054 m^3/s), 135 acre-ft/yr (166,000 m^3/yr); 21 years (1954-75), 0.55 ft^3/s (0.0156 m^3/s), 398 acre-ft/yr (491,000 m^3/yr).

EXTREMES.--Current year: Maximum discharge, 60 ft^3/s (1.70 m^3/s) Mar. 8 (gage height, 4.69 ft or 1.430 m); no flow some days.
Period of record: Maximum discharge, 313 ft^3/s (8.86 m^3/s) Jan. 25, 1969 (gage height, 7.32 ft or 2.231 m, present datum); no flow at times in each year.

REMARKS.--Records good. Flow regulated by Fullerton flood-control reservoir, capacity, 706 acre-ft (870,000 m^3). Small tributary formerly entering below station diverted into reservoir since December 1954. See schematic diagram of San Gabriel and Los Angeles River basins.

DISCHARGE, IN CUBIC FEET PER SECOND, WATER YEAR OCTOBER 1974 TO SEPTEMBER 1975
MEAN VALUES

DAY	OCT	NOV	DEC	JAN	FEB	MAR	APR	MAY	JUN	JUL	AUG	SEP
1	.02	0	.03	.06	.04	.06	.15	.10	.14	.14	.05	0
2	.02	0	.04	.07	.04	.04	.12	.10	.13	.15	.05	0
3	.02	0	.03	.07	16	.04	.12	.14	.14	.10	.05	.37
4	0	0	21	.07	16	.04	.12	.16	.13	.09	.11	1.1
5	.02	0	23	.07	1.4	2.3	.73	.12	.14	.11	.16	1.4
6	.01	0	6.1	.06	.12	20	1.6	.07	.14	.12	.14	.66
7	.03	0	.09	.05	.09	11	.35	.08	.14	.15	.12	.21
8	.05	.02	.05	.05	.08	34	2.3	.09	.14	.22	.07	.13
9	.02	.01	.07	.20	8.3	9.8	8.5	.11	.13	.19	.03	.17
10	.04	.06	.06	.07	12	2.5	.15	.11	.14	.16	.02	.13
11	.01	.06	.10	.05	2.2	1.7	.12	.11	.11	.15	.01	.07
12	.02	.04	.11	.04	.13	.54	.12	.11	.06	.17	.02	.04
13	.02	.01	.05	.04	.11	.57	.12	.12	.04	.16	.01	0
14	.02	0	.04	.04	.16	5.6	.12	.15	.03	.16	0	0
15	.01	.02	.04	.04	.08	.18	.71	.13	.02	.17	0	0
16	.02	.02	.04	.04	.07	.26	.19	.12	.01	.14	0	0
17	.03	.03	.04	.04	.08	.16	.28	.12	0	.17	0	0
18	.02	.01	.04	.04	.07	.15	.12	.14	0	.12	0	0
19	.02	.01	.04	.04	.07	.15	.12	.12	0	.11	0	.80
20	.03	0	.04	.04	.07	.15	.12	.12	0	.09	0	.14
21	.04	.02	.04	.04	.05	.15	.12	.09	0	.11	0	.17
22	.04	.02	.05	.04	.04	9.8	.12	.10	0	.11	0	.33
23	.03	.01	.04	.03	.04	.20	.11	.10	0	.08	0	.12
24	.02	.01	.03	.04	.04	.16	.10	.12	.09	.09	0	.07
25	.04	.03	.04	.04	.04	.16	.38	.11	.12	.10	0	.08
26	.03	.03	.05	.04	.04	.13	.10	.13	.18	.15	0	.07
27	.09	.03	.07	.04	.04	.15	.14	.14	.06	.18	0	.10
28	.96	.03	6.3	.05	.04	.87	.15	.16	.08	.16	0	.08
29	.14	.04	4.6	.05	---	.10	.10	.15	.09	.16	0	.12
30	.02	.04	.10	.28	---	.10	.10	.13	.12	.18	0	.08
31	0	---	.06	.07	---	.18	---	.14	---	.17	0	---
TOTAL	1.84	.55	62.39	1.90	57.44	101.24	17.58	3.69	2.38	4.36	.84	6.44
MEAN	.059	.018	2.01	.061	2.05	3.27	.59	.12	.079	.14	.027	.21
MAX	.96	.06	23	.28	16	34	8.5	.16	.18	.22	.16	1.4
MIN	0	0	.03	.03	.04	.04	.10	.07	0	.08	0	0
AC-FT	3.6	1.1	124	3.8	114	201	35	7.3	4.7	8.6	1.7	13

CAL YR 1974 TOTAL 330.49 MEAN .91 MAX 92 MIN 0 AC-FT 656
WTR YR 1975 TOTAL 260.65 MEAN .71 MAX 34 MIN 0 AC-FT 517

11090200 FULLERTON CREEK AT RICHMAN AVENUE, AT FULLERTON, CALIF.

LOCATION.--Lat 33°51'45", long 117°55'55", in NW¼SW¼SE¼ sec.33, T.3 S., R.10 W., Orange County, on right bank 125 ft (38 m) east of Richman Avenue, at Fullerton.

DRAINAGE AREA.--12.1 mi^2 (31.3 km^2).

PERIOD OF RECORD.--October 1959 to current year.

GAGE.--Water-stage recorder. Datum of gage is 126.4 ft (38.527 m) above mean sea level (levels by Orange County Flood Control District).

AVERAGE DISCHARGE.--16 years, 2.01 ft^3/s (0.0569 m^3/s), 1,460 acre-ft/yr (1.80 hm^3/yr).

EXTREMES.--Current year: Maximum discharge, 851 ft^3/s (24.1 m^3/s) Mar. 5 (gage height, 5.17 ft or 1.576 m); no flow Jan. 12, Feb. 16-20.
Period of record: Maximum discharge, 1,100 ft^3/s (31.2 m^3/s) Jan. 25, 1969 (gage height, 4.78 ft or 1.457 m); no flow many days in each year.

REMARKS.--Records fair. Flow regulated by Fullerton flood-control reservoir, capacity, 706 acre-ft (870,000 m^3). No diversion above station. See schematic diagram of San Gabriel and Los Angeles River basins.

COOPERATION.--Records furnished by Orange County Flood Control District.

DISCHARGE, IN CUBIC FEET PER SECOND, WATER YEAR OCTOBER 1974 TO SEPTEMBER 1975
MEAN VALUES

DAY	OCT	NOV	DEC	JAN	FEB	MAR	APR	MAY	JUN	JUL	AUG	SEP
1	.30	.20	.10	.10	.40	.10	.30	.30	.20	.70	.20	.20
2	.20	.10	.20	.10	.30	.10	.10	.20	.10	.70	.30	.20
3	.20	.40	.30	.10	81	.10	.10	.20	.10	.30	.40	.40
4	.20	.10	176	.10	27	.20	.10	.20	.10	.30	.20	2.1
5	.20	.20	32	.10	5.6	57	3.9	.20	.10	.20	.30	2.1
6	.20	.10	6.6	.10	.20	46	4.2	.20	.20	.30	.10	2.3
7	.90	.20	.20	.20	.40	18	.50	.10	.20	.20	.20	1.0
8	.30	.50	.30	.10	.40	114	26	.10	.20	.20	.20	1.0
9	.10	.20	1.4	.10	66	16	20	.10	.10	.20	.20	1.4
10	.20	.20	.40	.40	18	3.1	.50	.10	.10	.30	.30	1.4
11	.20	.20	.50	.10	6.3	4.0	.40	.20	.10	.20	.20	1.1
12	.20	.20	.60	0	.20	1.4	.10	.10	.10	.30	.30	1.1
13	.20	.20	.30	.10	.10	.40	.20	.10	.10	.20	.20	1.0
14	.50	.20	.30	.40	.20	1.6	.30	.20	.10	.10	.30	1.1
15	.20	.40	.30	.20	.10	.80	7.0	.20	.10	.60	.20	1.0
16	.20	.10	.40	.20	0	.40	1.0	.20	.10	.10	.20	1.0
17	.20	.10	.30	.20	0	.30	3.3	.20	.20	.20	.30	1.0
18	.10	.10	.40	.20	0	.10	.30	.20	.10	.30	.10	1.0
19	.10	.10	.30	.20	0	.10	.20	.10	.10	.40	.20	1.1
20	.10	.10	.40	.20	0	.10	.20	.20	.10	.50	.30	1.7
21	.10	.10	.40	.50	.10	.10	.20	.10	.10	.60	.30	1.1
22	.10	.20	.40	.50	.10	1.3	.20	.10	.10	.60	.30	1.1
23	.10	.20	.30	.40	.10	1.8	.20	.20	.10	.40	.30	1.1
24	.20	.10	.40	.20	.40	.50	.20	.60	.10	.10	.30	1.0
25	.20	.20	.40	.10	.20	.10	3.0	1.1	.10	.10	.20	1.0
26	.10	.20	.20	.10	.10	.20	.20	.40	.50	.20	.20	1.1
27	.10	.20	.30	.10	.10	.20	.10	.20	.30	.20	.30	1.0
28	7.9	.20	33	.10	.20	.60	.20	.20	.50	.10	.30	1.1
29	4.0	.20	12	.10	---	.20	.10	.40	.40	1.0	.30	1.1
30	.20	.10	.20	3.6	---	.10	.20	.40	.50	1.3	.30	1.1
31	.20	---	.20	.20	---	1.1	---	.20	---	.30	.30	---
TOTAL	18.00	5.60	269.10	9.10	207.50	270.00	73.30	7.30	5.20	11.20	7.80	33.90
MEAN	.58	.19	8.68	.29	7.41	8.71	2.44	.24	.17	.36	.25	1.13
MAX	7.9	.50	176	3.6	81	114	26	1.1	.50	1.3	.40	2.3
MIN	.10	.10	.10	0	0	.10	.10	.10	.10	.10	.10	.20
AC-FT	36	11	534	18	412	536	145	14	10	22	15	67

CAL YR 1974 TOTAL 1012.20 MEAN 2.77 MAX 218 MIN 0 AC-FT 2010
WTR YR 1975 TOTAL 918.00 MEAN 2.52 MAX 176 MIN 0 AC-FT 1820

11090700 COYOTE CREEK AT LOS ALAMITOS, CALIF.

LOCATION.--Lat 33°48'38", long 118°04'28", in NW¼NE¼SW¼ sec.19, T.4 S., R.11 W., Orange County, on right bank about 250 ft (76 m) downstream from Spring Street, 0.5 mi (0.8 km) northwest of Los Alamitos.

DRAINAGE AREA.--150 mi^2 (388 km^2).

PERIOD OF RECORD.--October 1963 to current year.

GAGE.--Water-stage recorder. Datum of gage is 7.37 ft (2.246 m) above mean sea level (levels by Los Angeles County Flood Control District).

AVERAGE DISCHARGE.--12 years, 35.8 ft^3/s (1.014 m^3/s), 25,900 acre-ft/yr (31.9 hm^3/yr).

EXTREMES.--Current year: Maximum discharge, 14,300 ft^3/s (405 m^3/s) Dec. 4 (gage height, 7.25 ft or 2.210 m, from outside gage); minimum daily, 2.3 ft^3/s (0.065 m^3/s) Jan. 28, 29.
Period of record: Maximum discharge, 14,300 ft^3/s (405 m^3/s) Dec. 4, 1974 (gage height, 7.25 ft or 2.210 m, from outside gage); no flow Jan. 25, Feb. 15-17, 1964.

REMARKS.--Records poor. Flows up to 100 ft^3/s (2.83 m^3/s) can be diverted from present Carbon Creek channel to Coyote Creek through the original Carbon Creek channel. Flow partially regulated by Carbon Canyon, Brea and Fullerton flood-control reservoirs, combined capacity, 11,840 acre-ft (14.6 hm^3). AVERAGE DISCHARGE represents flow to ocean during period of record, regardless of upstream development. See schematic diagram of San Gabriel and Los Angeles River basins.

COOPERATION.--Records furnished by Los Angeles County Flood Control District.

REVISIONS.--WRD Calif. 1974: Drainage area.

DISCHARGE, IN CUBIC FEET PER SECOND, WATER YEAR OCTOBER 1974 TO SEPTEMBER 1975
MEAN VALUES

DAY	OCT	NOV	DEC	JAN	FEB	MAR	APR	MAY	JUN	JUL	AUG	SEP
1	5.5	4.3	4.3	6.2	4.6	4.0	5.2	3.7	6.2	7.5	6.2	8.8
2	7.5	3.1	4.3	5.5	8.1	4.0	4.6	4.3	6.1	6.8	6.2	6.2
3	8.8	3.7	5.5	5.5	1280	4.0	4.6	4.6	6.2	6.8	6.2	5.2
4	7.5	3.4	3130	5.2	231	4.0	4.6	6.8	4.9	8.8	6.8	4.9
5	8.8	3.4	153	5.2	47	300	54	4.9	5.2	6.2	5.2	6.2
6	10	3.4	27	4.9	7.5	687	86	4.9	4.9	7.5	6.2	7.5
7	25	4.0	6.2	5.5	5.2	60	13	5.2	5.2	6.8	5.5	6.8
8	8.1	4.3	4.0	5.5	4.6	1190	123	6.2	5.5	6.8	5.5	8.1
9	3.7	4.0	3.7	5.2	1600	55	173	6.2	4.9	6.8	6.8	5.5
10	2.5	4.0	3.7	4.9	205	395	4.9	8.8	4.3	8.8	5.2	4.9
11	3.4	4.6	4.3	5.2	11	64	3.7	8.8	4.3	8.8	6.2	4.6
12	3.1	4.0	4.3	5.5	11	15	3.7	8.1	4.6	8.8	5.2	5.2
13	4.0	4.6	4.6	6.2	6.2	16	3.7	9.4	4.6	9.4	4.9	7.5
14	5.2	4.6	4.6	5.5	7.5	146	3.7	9.4	4.9	10	4.9	6.2
15	4.6	5.2	4.6	9.4	5.5	11	71	8.8	4.6	8.8	4.9	5.2
16	5.2	5.2	4.6	5.5	5.6	16	8.1	10	4.6	6.8	6.2	6.2
17	6.2	4.6	4.6	4.6	5.2	8.1	24	13	7.5	6.8	7.5	6.8
18	7.5	4.3	4.6	4.3	8.1	5.2	3.7	20	4.6	6.8	5.5	7.5
19	5.2	4.0	4.6	4.6	6.2	4.6	3.4	13	4.6	8.8	5.2	7.5
20	5.5	5.5	4.9	4.0	6.8	4.3	4.0	36	6.2	8.8	5.5	8.1
21	5.2	4.3	5.2	3.7	6.2	4.3	4.0	8.8	7.5	8.8	5.5	8.1
22	4.0	10	4.9	4.0	4.3	307	5.5	6.2	7.5	6.8	4.9	8.1
23	6.2	4.3	4.3	3.4	4.3	4.9	3.4	6.2	6.8	5.5	5.5	5.2
24	4.3	4.6	4.9	3.4	4.6	4.9	3.7	5.5	5.5	5.2	6.2	5.2
25	3.7	8.1	4.3	3.4	5.5	4.3	38	6.8	6.8	5.2	6.8	5.2
26	4.0	3.7	4.0	3.1	4.6	4.3	4.0	9.4	6.1	5.2	6.2	5.2
27	3.4	4.9	4.6	2.5	4.6	4.0	4.0	7.5	8.8	5.2	5.5	4.9
28	313	6.2	446	2.3	4.0	4.0	8.1	5.2	6.8	6.2	5.2	4.6
29	38	6.2	150	2.3	---	4.0	8.1	5.5	6.8	5.5	5.5	3.7
30	4.0	4.0	6.2	46	---	4.9	5.2	5.2	5.2	8.1	5.5	3.7
31	3.1	---	12	31	---	10	---	5.2	---	7.5	6.8	---
TOTAL	526.2	140.5	4033.8	213.5	3504.2	3349.8	685.9	263.6	175.7	225.8	179.4	182.8
MEAN	17.0	4.68	130	6.89	125	108	22.9	8.50	5.86	7.28	5.79	6.09
MAX	313	10	3130	46	1600	1190	173	36	8.8	10	7.5	8.8
MIN	2.5	3.1	3.7	2.3	4.0	4.0	3.4	3.7	4.3	5.2	4.9	3.7
AC-FT	1040	279	8000	423	6950	6640	1360	523	349	448	356	363

CAL YR 1974 TOTAL 16522.5 MEAN 45.3 MAX 3130 MIN 2.3 AC-FT 32770
WTR YR 1975 TOTAL 13481.2 MEAN 36.9 MAX 3130 MIN 2.3 AC-FT 26740

NOTE.--No gage-height record Dec. 4.

11092450 LOS ANGELES RIVER AT SEPULVEDA DAM, CALIF.

LOCATION.--Lat 34°09'42", long 118°27'57", in Ex Mission de San Fernando Grant, Los Angeles County, on right bank of outlet channel of Sepulveda Dam, 200 ft (61 m) upstream from Sepulveda Boulevard in city of Los Angeles, and 1.8 mi (2.9 km) southwest of Van Nuys.

DRAINAGE AREA.--158 mi^2 (409 km^2).

PERIOD OF RECORD.--January 1929 to February 1938, May 1938 to current year. See WSP 1315-B, 1735 for history of records prior to September 1950.

GAGE.--Water-stage recorder. Datum of gage is 652.7 ft (198.94 m) above mean sea level. See WSP 1735 for history of changes prior to Aug. 29, 1953.

AVERAGE DISCHARGE.--45 years (1929-37, 1938-75), 31.0 ft^3/s (0.878 m^3/s), 22,460 acre-ft/yr (27.7 hm^3/yr).

EXTREMES.--Current year: Maximum discharge, 11,400 ft^3/s (321 m^3/s) Dec. 4 (gage height, 10.02 ft or 3.054 m); minimum daily, 1.8 ft^3/s (0.051 m^3/s) Aug. 19, 21.
Period of record: Maximum discharge, 13,800 ft^3/s (391 m^3/s) Jan. 25, 1969 (gage height, 11.42 ft or 3.481 m); no flow Sept. 19, 20, 1930.
Flood of Mar. 2, 1938, estimated to be 12,000 ft^3/s (340 m^3/s).

REMARKS.--Records good. Flow regulated since December 1941 by Sepulveda flood-control reservoir, capacity, 17,400 acre-ft (21.5 hm^3). Some diversion above station. At times, city of Los Angeles discharges imported Owens River water into Los Angeles River from upstream distributing reservoirs. During current year, 69 acre-ft (85,100 m^3) of imported water was reported. See schematic diagram of San Gabriel and Los Angeles River basins.

COOPERATION.--Records of released water from reservoirs furnished by city of Los Angeles.

DISCHARGE, IN CUBIC FEET PER SECOND, WATER YEAR OCTOBER 1974 TO SEPTEMBER 1975
MEAN VALUES

DAY	OCT	NOV	DEC	JAN	FEB	MAR	APR	MAY	JUN	JUL	AUG	SEP
1	5.5	4.2	4.0	4.8	9.1	6.7	9.0	14	7.0	9.7	7.3	5.9
2	5.1	3.5	3.9	6.0	470	6.1	13	14	6.8	11	6.9	5.6
3	4.9	4.0	180	6.8	980	5.7	8.6	15	7.1	10	6.0	4.5
4	4.4	4.0	2250	8.0	322	5.5	9.6	13	6.5	9.6	5.0	4.9
5	4.1	3.8	39	6.0	16	1020	583	11	7.0	8.5	5.5	4.5
6	5.4	3.8	11	7.3	7.3	1410	128	12	6.4	8.7	5.2	5.5
7	161	4.4	17	6.5	6.2	227	40	13	6.7	9.6	5.4	5.6
8	27	4.9	7.1	6.4	6.4	1470	52	12	7.1	12	4.7	6.1
9	7.8	4.4	4.2	5.7	582	56	379	13	7.9	11	4.7	3.8
10	6.9	5.0	4.6	5.4	90	562	19	13	8.2	10	5.0	5.7
11	7.0	5.6	4.2	6.1	10	61	18	15	8.2	10	3.6	5.1
12	7.0	5.0	4.2	5.7	9.0	22	13	13	7.3	10	2.8	4.6
13	8.6	5.4	3.7	5.9	6.9	39	10	14	7.6	10	3.2	3.6
14	8.6	5.5	3.1	7.5	7.0	59	9.7	12	7.1	12	3.2	3.9
15	8.6	5.5	3.7	7.7	5.5	14	35	9.7	7.0	9.1	2.8	4.4
16	12	5.5	4.1	7.8	5.8	28	10	7.5	6.5	5.0	2.6	11
17	10	5.5	4.5	8.5	4.6	7.6	12	6.5	6.4	4.4	2.3	2.7
18	9.7	5.5	3.8	7.1	5.4	6.9	14	6.5	7.3	4.8	2.1	2.7
19	8.6	5.5	4.7	7.6	5.7	6.9	12	5.5	6.1	5.5	1.8	4.0
20	8.6	5.5	6.6	8.2	5.4	7.4	12	6.0	5.5	6.4	2.1	4.9
21	8.6	4.9	5.2	8.0	4.9	8.2	14	5.5	21	5.9	1.8	5.2
22	8.0	4.9	4.6	7.3	4.3	269	12	4.6	7.6	6.2	3.1	5.0
23	8.0	4.9	4.8	7.3	5.9	12	11	5.5	7.8	6.6	4.0	5.5
24	8.6	4.9	5.0	8.7	6.7	9.7	12	5.5	7.8	6.7	5.0	6.5
25	9.1	4.9	3.6	10	5.9	10	14	6.0	8.0	6.9	4.7	6.3
26	9.1	4.4	5.1	10	5.8	8.4	11	5.5	8.8	7.2	4.2	5.1
27	9.1	4.4	6.3	11	6.1	7.6	12	5.6	12	7.4	4.6	4.7
28	180	4.4	846	10	5.6	7.3	12	6.0	9.8	6.8	4.7	5.3
29	8.1	4.4	63	8.0	---	6.7	16	7.0	9.1	6.9	5.3	7.7
30	4.7	4.4	8.1	15	---	8.6	16	5.9	11	7.1	5.4	7.4
31	4.6	---	5.9	11	---	8.8	---	6.5	---	7.5	5.6	---
TOTAL	578.7	143.0	3521.0	241.3	2599.5	5377.1	1516.9	289.3	242.6	252.5	130.6	157.7
MEAN	18.7	4.77	114	7.78	92.8	173	50.6	9.33	8.09	8.15	4.21	5.26
MAX	180	5.6	2250	15	980	1470	583	15	21	12	7.3	11
MIN	4.1	3.5	3.1	4.8	4.3	5.5	8.6	4.6	5.5	4.4	1.8	2.7
AC-FT	1150	284	6980	479	5160	10670	3010	574	481	501	259	313

CAL YR 1974 TOTAL 19945.9 MEAN 54.6 MAX 5340 MIN 3.1 AC-FT 39560
WTR YR 1975 TOTAL 15050.2 MEAN 41.2 MAX 2250 MIN 1.8 AC-FT 29850

11093000 PACOIMA CREEK NEAR SAN FERNANDO, CALIF.

LOCATION.--Lat 34°20'07", long 118°23'50", in SE¼NE¼ sec.24, T.3 N., R.15 W., Los Angeles County, on right bank 500 ft (152 m) downstream from Pacoima Dam, 0.3 mi (0.5 km) upstream from mouth of canyon, and 4 mi (6 km) northeast of San Fernando.

DRAINAGE AREA.--28.3 mi^2 (73.3 km^2).

PERIOD OF RECORD.--March to July 1916 (fragmentary), December 1916 to current year.

GAGE.--Water-stage recorder. Flume or weir control since June 1937. Altitude of gage is 1,650 ft (503 m), from topographic map. See WSP 1735 for history of changes prior to Feb. 1, 1935.

AVERAGE DISCHARGE.--58 years (1917-75), 9.36 ft^3/s (0.265 m^3/s), 6,780 acre-ft/yr (8.36 hm^3/yr).

EXTREMES.--Current year: Maximum discharge, 211 ft^3/s (5.98 m^3/s) Dec. 12 (gage height, 2.21 ft or 0.674 m), from rating curve extended above 120 ft^3/s (3.40 m^3/s); minimum daily, 0.10 ft^3/s (0.003 m^3/s) many days.
Period of record: Maximum discharge, 2,440 ft^3/s (69.1 m^3/s) Mar. 3, 1938; no flow for periods in some years.

REMARKS.--Records poor. Flow regulated by Pacoima flood-control reservoir since February 1929, capacity, 3,841 acre-ft (4.74 hm^3). Flow passing over Pacoima Dam spillway enters creek below station. No diversion above station. See schematic diagram of San Gabriel and Los Angeles River basins.

COOPERATION.--Records furnished by Los Angeles County Flood Control District.

DISCHARGE, IN CUBIC FEET PER SECOND, WATER YEAR OCTOBER 1974 TO SEPTEMBER 1975
MEAN VALUES

DAY	OCT	NOV	DEC	JAN	FEB	MAR	APR	MAY	JUN	JUL	AUG	SEP
1	.10	.10	.10	.10	.10	.10	8.1	8.0	.10	.10	.10	.60
2	.10	.10	.10	.10	.10	.10	.10	8.0	.10	.10	.10	2.6
3	.10	.10	.10	.10	.10	4.4	.10	8.4	.10	.10	.10	.60
4	.10	.10	24	.10	.10	11	.10	7.7	.10	.10	.10	.60
5	.10	.10	7.1	.10	.10	7.4	.10	7.7	.10	.10	.10	2.1
6	.10	.10	.10	.10	.10	.10	.10	7.7	.10	.10	.10	.60
7	.10	.10	.10	.10	.10	28	6.0	7.7	.10	.10	.10	.60
8	.10	.10	.10	.10	.10	41	10	7.7	.10	.10	.10	.60
9	.10	.10	.10	.10	.10	44	10	6.4	.10	.10	.10	.60
10	.10	.10	.10	.10	.10	38	9.1	5.4	.10	.10	.10	2.9
11	.10	.10	.10	.10	.10	37	14	5.4	.10	.10	.10	.60
12	.10	.10	2.5	.10	.10	26	19	5.4	.10	.10	.10	.60
13	.10	.10	.50	.10	.10	7.3	19	4.2	.10	.10	.10	.60
14	.10	.10	.10	.10	.10	10	38	1.6	.10	.10	9.2	.60
15	.10	.10	.10	.10	.10	16	66	.10	.10	.10	22	2.6
16	.10	.10	.10	.10	.10	16	40	.10	.10	.10	24	.60
17	.10	.10	.10	.10	.10	16	18	.10	.10	.10	22	.60
18	.10	.10	.10	.10	.10	12	12	.10	.10	.10	49	.60
19	.10	.10	.10	.10	.10	7.7	12	1.7	.10	.10	83	2.0
20	.10	.10	.10	.10	.10	7.7	12	4.0	.10	.10	2.0	.60
21	.10	.10	.10	.10	.10	7.7	12	4.0	.10	.10	1.0	.60
22	.10	.10	.10	.10	.10	7.7	12	4.2	.10	.10	4.8	.60
23	.10	.10	.10	.10	.10	7.7	12	4.2	.10	.10	.70	.60
24	.10	.10	.10	.10	.10	9.0	11	4.2	.10	.10	.70	.60
25	.10	.10	.10	.10	.10	10	9.8	4.2	.10	.10	.70	.60
26	.10	.10	.10	.10	.10	9.9	9.8	4.2	.10	.10	.70	2.5
27	.10	.10	.10	.10	.10	9.9	9.8	4.2	.10	.10	2.1	.60
28	.10	.10	.10	.10	.10	9.9	9.0	4.2	.10	.10	.60	.60
29	.10	.10	.10	.10	---	9.9	7.8	4.2	.10	.10	.60	1.5
30	.10	.10	.10	.10	---	9.9	7.8	1.9	.10	.10	1.5	.60
31	.10	---	.10	.10	---	9.5	---	.10	---	.10	.60	---
TOTAL	3.10	3.00	36.80	3.10	2.80	430.90	394.70	137.00	3.00	3.10	226.50	30.00
MEAN	.10	.10	1.19	.10	.10	13.9	13.2	4.42	.10	.10	7.31	1.00
MAX	.10	.10	24	.10	.10	44	66	8.4	.10	.10	83	2.9
MIN	.10	.10	.10	.10	.10	.10	.10	.10	.10	.10	.10	.60
AC-FT	6.1	6.0	73	6.1	5.6	855	783	272	6.0	6.1	449	60

CAL YR 1974 TOTAL 2032.30 MEAN 5.57 MAX 205 MIN .10 AC-FT 4030
WTR YR 1975 TOTAL 1274.00 MEAN 3.49 MAX 83 MIN .10 AC-FT 2530

11095500 BIG TUJUNGA CREEK NEAR SUNLAND, CALIF.
(Formerly published as Tujunga Creek near Sunland)

LOCATION.--Lat 34°18'02", long 118°16'04", in SW¼NW¼SW¼ sec.32, T.3 N., R.13 W., Los Angeles County, on left bank 1,000 ft (305 m) upstream from Gold Canyon, 2 mi (3 km) upstream from mouth of canyon, and 4 mi (6 km) northeast of Sunland.

DRAINAGE AREA.--106 mi^2 (275 km^2).

PERIOD OF RECORD.--October 1916 to current year.

GAGE.--Water-stage recorder. Datum of gage is 1,571.80 ft (479.085 m) above mean sea level (levels by Los Angeles County Flood Control District). Prior to Oct. 1, 1932, at site 1,000 ft (305 m) upstream at different datum.

AVERAGE DISCHARGE.--58 years (1917-75), 28.6 ft^3/s (0.810 m^3/s), 20,720 acre-ft/yr (25.5 hm^3/yr).

EXTREMES.--Current year: Maximum discharge, 232 ft^3/s (6.57 m^3/s) Mar. 6 (gage height, 8.01 ft or 2.441 m); minimum daily, 1.0 ft^3/s (0.028 m^3/s) Nov. 7-13.
Period of record: Maximum discharge, 50,000 ft^3/s (1,420 m^3/s), estimated, Mar. 2, 1938; minimum, 0.10 ft^3/s (0.003 m^3/s) at times in some years.

REMARKS.--Records poor. Flow regulated since July 1931 by Big Tujunga flood-control reservoir, capacity, 3,819 acre-ft (4.71 hm^3). Several small diversions above station for irrigation. See schematic diagram of San Gabriel and Los Angeles River basins.

COOPERATION.--Records furnished by Los Angeles County Flood Control District.

DISCHARGE, IN CUBIC FEET PER SECOND, WATER YEAR OCTOBER 1974 TO SEPTEMBER 1975
MEAN VALUES

DAY	OCT	NOV	DEC	JAN	FEB	MAR	APR	MAY	JUN	JUL	AUG	SEP
1	35	1.9	21	2.6	2.6	2.6	93	11	8.2	5.1	4.6	6.8
2	58	1.9	14	2.6	3.8	2.6	91	11	9.0	5.1	4.5	6.1
3	79	1.6	4.9	2.6	19	2.7	89	10	9.0	5.1	4.4	6.1
4	64	1.3	34	2.6	8.6	2.7	87	9.8	9.0	5.1	3.8	5.2
5	64	1.3	7.5	2.6	6.2	10	94	9.8	7.7	5.6	3.8	4.6
6	66	1.3	5.4	2.6	5.4	86	93	9.0	7.2	5.1	3.5	5.1
7	69	1.0	4.5	2.6	4.9	34	49	9.0	7.2	5.1	4.0	4.6
8	70	1.0	3.2	2.6	4.5	66	9.8	9.0	7.2	6.6	4.0	4.6
9	69	1.0	2.9	2.6	7.1	30	38	9.0	6.6	6.6	4.0	4.6
10	66	1.0	2.9	2.6	9.2	26	93	9.0	6.6	5.6	3.5	5.1
11	66	1.0	2.9	2.6	6.2	18	93	9.0	6.6	5.6	3.7	5.1
12	64	1.0	2.9	2.6	4.5	16	89	7.7	6.6	5.6	4.0	11
13	63	1.0	2.9	2.6	4.1	15	87	7.7	7.2	5.6	4.5	21
14	61	1.3	2.6	2.6	4.1	22	85	7.7	7.2	5.6	4.6	22
15	58	1.3	2.6	2.2	4.1	14	85	7.7	7.2	5.6	4.6	22
16	57	1.3	2.6	2.6	3.6	13	81	8.2	7.7	5.6	4.3	22
17	57	1.3	2.6	2.2	3.6	12	51	8.2	7.7	5.1	3.5	22
18	57	1.3	2.2	2.2	3.6	10	16	9.0	7.7	4.6	4.0	25
19	56	1.3	2.2	2.2	3.2	10	14	14	7.7	4.6	4.0	23
20	56	1.3	2.2	2.2	3.6	10	13	14	7.7	4.6	4.6	23
21	55	7.9	2.2	2.6	3.6	9.8	12	10	7.7	4.6	4.6	24
22	55	22	2.2	2.6	3.2	19	12	9.8	6.6	4.6	4.6	23
23	55	23	2.2	2.6	3.2	12	12	9.8	6.6	4.6	4.3	23
24	53	23	2.2	2.6	3.2	11	12	8.2	6.6	4.6	4.0	21
25	53	23	2.6	2.6	3.2	11	12	7.2	6.6	4.6	4.6	19
26	53	23	2.6	2.6	3.2	10	11	6.6	6.6	4.6	4.6	18
27	36	23	2.6	2.6	3.2	10	11	6.1	6.7	4.6	4.6	16
28	9.2	22	8.3	2.6	3.2	9.8	11	6.6	6.7	4.6	5.1	17
29	3.6	22	4.5	2.6	---	9.0	10	6.1	6.1	4.6	5.6	19
30	2.6	21	2.6	2.6	---	8.2	11	8.2	5.1	4.6	5.1	18
31	2.2	---	2.2	2.6	---	50	---	8.2	---	4.6	5.9	---
TOTAL	1612.6	235.3	160.2	78.6	137.9	562.4	1464.8	276.6	216.3	158.1	134.9	446.9
MEAN	52.0	7.84	5.17	2.54	4.93	18.1	48.8	8.92	7.21	5.10	4.35	14.9
MAX	79	23	34	2.6	19	86	94	14	9.0	6.6	5.9	25
MIN	2.2	1.0	2.2	2.2	2.6	2.6	9.8	6.1	5.1	4.6	3.5	4.6
AC-FT	3200	467	316	156	274	1120	2910	549	429	314	268	886

CAL YR 1974 TOTAL 6401.2 MEAN 17.5 MAX 235 MIN 1.0 AC-FT 12700
WTR YR 1975 TOTAL 5484.6 MEAN 15.0 MAX 94 MIN 1.0 AC-FT 10880

11097000 TUJUNGA CREEK BELOW HANSEN DAM, CALIF.

LOCATION.--Lat 34°15'13", long 118°23'17", in Ex Mission San Fernando Grant, Los Angeles County, in city of Los Angeles, on left bank of outlet channel of Hansen Dam, 0.1 mi (0.2 km) upstream from Glen Oaks Boulevard, and 3 mi (5 km) southeast of San Fernando.

DRAINAGE AREA.--153 mi^2 (396 km^2).

PERIOD OF RECORD.--May 1932 to February 1938, August 1940 to current year. Monthly discharge only for some periods, published in WSP 1315-B.

GAGE.--Water-stage recorder. Datum of gage is 943.32 ft (287.524 m) above mean sea level (Corps of Engineers bench mark). See WSP 1735 for history of changes prior to Oct. 1, 1953.

EXTREMES.--Current year: Maximum discharge, 38 ft^3/s (1.08 m^3/s) Oct. 31 (gage height, 1.20 ft or 0.366 m); no flow most of year.

Period of record: Maximum discharge, 11,700 ft^3/s (331 m^3/s) Feb. 25, 1969 (gage height, 7.36 ft or 2.243 m), from rating curve extended above 5,000 ft^3/s (142 m^3/s) on basis of gate openings at dam; no flow for all or parts of each year.

Maximum discharge since May 1932, 54,000 ft^3/s (1,530 m^3/s), estimated, Mar. 2, 1938.

REMARKS.--Records fair. Flow regulated since July 1931 by Big Tujunga flood-control reservoir, capacity, 4,240 acre-ft (5.23 hm^3) and since September 1940 by Hansen flood-control reservoir, capacity, 29,700 acre-ft (36.6 hm^3). Several small diversions for domestic use and irrigation. Water reported herein is that which passed Hansen Dam. Los Angeles County Flood Control District diverts 0.3 mi (0.5 km) upstream from gage to spreading grounds. See schematic diagram of San Gabriel and Los Angeles River basins.

COOPERATION.--Records of diversion furnished by Los Angeles County Flood Control District.

DISCHARGE, IN CUBIC FEET PER SECOND, WATER YEAR OCTOBER 1974 TO SEPTEMBER 1975
MEAN VALUES

DAY	OCT	NOV	DEC	JAN	FEB	MAR	APR	MAY	JUN	JUL	AUG	SEP
1	0		0		0	0	0	0				
2	0		0		.63	0	0	0				
3	0		.26		.94	0	0	0				
4	0		1.7		.25	0	0	0				
5	0		0		.02	.86	.79	0				
6	0		0		0	2.5	.14	0				
7	.57		0		0	.11	.14	0				
8	.23		0		.03	1.5	.50	0				
9	0		0		.60	.07	.14	0				
10	0		0		.15	.24	0	0				
11	0		0		0	.03	.50	0				
12	0		0		0	0	.14	0				
13	0		0		.02	.18	0	0				
14	0		0		0	.14	0	.05				
15	.68		0		0	0	.50	0				
16	1.1		0		0	0	0	0				
17	.14		0		0	0	0	0				
18	.14		0		0	0	0	0				
19	0		0		0	0	0	0				
20	0		0		0	0	0	.02				
21	0		0		0	.54	.02	0				
22	0		0		0	.64	.05	0				
23	0		0		0	0	.14	0				
24	0		0		0	0	.08	0				
25	0		0		0	0	.14	0				
26	0		0		0	0	0	0				
27	0		0		0	0	0	0				
28	.29		1.1		0	0	0	0				
29	.14		.02		---	0	0	0				
30	0		0		---	0	0	0				
31	1.6	---	0		---	0	---	0	---			---
TOTAL	4.89	0	3.08	0	2.64	6.81	3.28	.07	0	0	0	0
MEAN	.16	0	.099	0	.094	.22	.11	.002	0	0	0	0
MAX	1.6	0	1.7	0	.94	2.5	.79	.05	0	0	0	0
MIN	0	0	0	0	0	0	0	0	0	0	0	0
AC-FT	9.7	0	6.1	0	5.2	14	6.5	.1	0	0	0	0
(a)	1,740	0	6.1	0	5.2	1,350	2,370	.1	0	0	0	0

CAL YR 1974 TOTAL 9.84 MEAN .027 MAX 1.7 MIN 0 AC-FT 20 AC-FT a 8,040
WTR YR 1975 TOTAL 20.77 MEAN .057 MAX 2.5 MIN 0 AC-FT 41 AC-FT a 5,470

a Combined discharge, in acre-feet, of creek and diversion.

11097490 LOS ANGELES RIVER AT FELIZ BOULEVARD, LOS ANGELES, CALIF.

LOCATION.--Lat 34°07'18", long 118°16'10", Los Angeles County, on bridge at Feliz Boulevard in Los Angeles.

PERIOD OF RECORD.--Chemical analyses: November 1973 to current year.

REMARKS.--Chemical-quality records furnished by California Department of Water Resources. No discharge records available.

WATER QUALITY DATA, WATER YEAR OCTOBER 1974 TO SEPTEMBER 1975

DATE	TIME	DIS-SOLVED CAL-CIUM (CA) (MG/L)	DIS-SOLVED MAG-NE-SIUM (MG) (MG/L)	DIS-SOLVED SODIUM (NA) (MG/L)	DIS-SOLVED PO-TAS-SIUM (K) (MG/L)	BICAR-BONATE (HCO3) (MG/L)	CAR-BONATE (CO3) (MG/L)	ALKA-LINITY AS CACO3 (MG/L)	DIS-SOLVED SULFATE (SO4) (MG/L)
OCT.									
02...	0655	86	25	97	13	259	0	212	186
NOV.									
07...	0720	89	19	96	13	251	0	206	165
DEC.									
06...	0420	77	14	66	8.4	148	0	121	163
JAN.									
07...	0740	89	24	107	9.3	230	0	189	220
FEB.									
05...	0500	49	13	42	5.7	114	0	94	120
MAR.									
06...	0715	12	3.5	6.6	4.2	38	0	31	24
APR.									
04...	0430	78	23	92	9.2	247	0	203	163
MAY									
05...	0505	66	30	96	9.9	263	3	221	151
JUNE									
03...	0645	80	26	99	8.8	192	8	171	180
JULY									
02...	0730	95	23	105	9.2	242	0	198	218
AUG.									
07...	0625	91	30	100	11	299	0	245	239
SEP.									
05...	0630	90	29	99	9.0	217	0	178	248

DATE	DIS-SOLVED CHLO-RIDE (CL) (MG/L)	TOTAL NITRATE (N) (MG/L)	AMMONIA NITRO-GEN (N) (MG/L)	TOTAL ORTHO PHOS-PHORUS (P) (MG/L)	HARD-NESS (CA,MG) (MG/L)	NON-CAR-BONATE HARD-NESS (MG/L)	PERCENT SODIUM	SODIUM AD-SORP-TION RATIO	SPE-CIFIC CON-DUCT-ANCE (MICRO-MHOS)
OCT.									
02...	90	6.1	.27	2.0	317	110	39	2.4	1070
NOV.									
07...	86	10	4.4	1.9	299	93	40	2.4	1050
DEC.									
06...	73	2.8	2.1	.49	251	130	36	1.8	818
JAN.									
07...	104	4.2	7.8	1.5	321	130	41	2.6	1180
FEB.									
05...	44	2.3	.89	.36	175	81	33	1.4	567
MAR.									
06...	4.8	.79	.00	.08	44	13	22	.4	116
APR.									
04...	91	4.3	5.1	1.4	289	86	40	2.4	1040
MAY									
05...	88	1.3	.74	1.5	288	67	41	2.5	1080
JUNE									
03...	113	2.2	.37	.52	307	140	40	2.5	1060
JULY									
02...	102	2.7	1.3	1.2	332	130	40	2.5	1140
AUG.									
07...	88	--	--	1.5	354	110	37	2.3	1150
SEP.									
05...	86	4.9	.68	2.4	343	170	38	2.3	1080

11097490 LOS ANGELES RIVER AT FELIZ BOULEVARD, LOS ANGELES, CALIF.--Continued

WATER QUALITY DATA, WATER YEAR OCTOBER 1974 TO SEPTEMBER 1975

DATE	PH (UNITS)	TEMPER-ATURE (DEG C)	DIS-SOLVED OXYGEN (MG/L)	CHEM-ICAL OXYGEN DEMAND (HIGH LEVEL) (MG/L)	BIO-CHEM-ICAL OXYGEN DEMAND 5 DAY (MG/L)	IMME-DIATE COLI-FORM (COL. PER 100 ML)	FECAL COLI-FORM (COL. PER 100 ML)	STREP-TOCOCCI (COL-ONIES PER 100 ML)
OCT.								
02...	--	18.0	3.8	32	7.0	510	40	400
NOV.								
07...	--	5.5	6.6	21	6.0	1600	600	4600
DEC.								
06...	--	13.0	8.5	33	10	15900	740	9500
JAN.								
07...	--	10.5	8.3	28	5.0	600	40	300
FEB.								
05...	7.6	11.0	8.9	53	7.0	21000	--	--
MAR.								
06...	--	11.5	9.1	75	13	14500	8600	>70000
APR.								
04...	--	11.0	6.0	99	5.0	2800	110	500
MAY								
05...	--	9.5	7.4	34	9.0	1400	35	100
JUNE								
03...	--	17.0	6.9	44	7.0	24500	1700	6000
JULY								
02...	--	17.0	6.8	30	7.0	9100	720	1000
AUG.								
07...	--	20.5	5.3	48	6.0	46000	1600	7000
SEP.								
05...	--	21.0	4.1	30	6.0	3400	160	2800

11097500 LOS ANGELES RIVER AT LOS ANGELES, CALIF.

LOCATION.--Lat 34°04'52", long 118°13'36", landline location not available, Los Angeles County, on right bank near Figueroa Street, Los Angeles, and 800 ft (244 m) upstream from Arroyo Seco.

DRAINAGE AREA.--514 mi^2 (1,331 km^2).

PERIOD OF RECORD.--October 1929 to current year.

GAGE.--Water-stage recorder. Datum of gage is 292.58 ft (89.178 m) above mean sea level (levels by Los Angeles County Flood Control District). See WSP 1315-B for history of changes prior to Dec. 8, 1939.

AVERAGE DISCHARGE.--46 years, 74.1 ft^3/s (2.099 m^3/s), 53,690 acre-ft/yr (66.2 hm^3/yr).

EXTREMES.--Current year: Maximum discharge, 27,570 ft^3/s (781 m^3/s) Dec. 4 (gage height, 9.08 ft or 2.768 m); minimum daily, 4.2 ft^3/s (0.12 m^3/s) July 4.
Period of record: Maximum discharge, 67,000 ft^3/s (1,900 m^3/s) Mar. 2, 1938; no flow at times in some years.

REMARKS.--Records fair. Flow regulated since September 1940 by Hansen flood-control reservoir and since December 1941 by Sepulveda flood-control reservoir, combined capacity, 49,400 acre-ft (60.9 hm^3) and several small flood-control reservoirs. At times city of Los Angeles discharges imported Owens River water into Los Angeles River from upstream distributing reservoirs. Excess treated sewage effluent from Los Angeles Bureau of Sanitation is released to channel about 8 mi (13 km) upstream. Many diversions above station for domestic use and irrigation. See schematic diagram of San Gabriel and Los Angeles River basins.

COOPERATION.--Records furnished by Los Angeles County Flood Control District.

DISCHARGE, IN CUBIC FEET PER SECOND, WATER YEAR OCTOBER 1974 TO SEPTEMBER 1975
MEAN VALUES

DAY	OCT	NOV	DEC	JAN	FEB	MAR	APR	MAY	JUN	JUL	AUG	SEP
1	9.2	8.5	7.7	13	14	18	12	11	6.7	20	12	7.4
2	10	26	9.2	12	711	17	14	10	5.8	13	9.8	9.2
3	9.2	5.8	78	12	2720	20	10	10	4.6	13	8.2	11
4	9.2	6.7	5750	12	575	18	10	8.7	5.0	4.2	8.2	12
5	7.7	6.7	149	12	45	987	1130	7.7	5.4	9.2	9.2	18
6	7.2	6.2	28	12	19	4210	375	11	5.0	9.2	14	18
7	295	7.2	30	12	14	247	163	12	6.7	8.6	9.2	18
8	117	7.7	19	12	8.3	3030	105	8.2	9.2	9.7	8.7	21
9	26	7.2	16	12	1100	86	759	9.2	10	13	14	25
10	15	7.2	11	12	336	696	63	12	9.2	9.3	13	19
11	18	6.7	9.8	12	34	250	115	9.8	8.7	9.4	13	17
12	9.8	8.2	9.2	12	19	47	90	14	7.7	7.8	11	14
13	8.7	11	8.2	11	13	40	22	18	6.7	7.7	12	10
14	8.7	8.2	7.2	11	14	30	19	15	12	12	13	9.2
15	9.8	8.7	7.2	11	16	20	279	15	5.0	15	13	9.2
16	9.2	8.7	6.7	11	16	20	33	16	5.8	8.2	12	40
17	10	9.8	9.8	10	16	20	16	14	9.5	9.2	11	30
18	13	10	9.8	12	18	20	12	12	17	13	11	16
19	12	12	9.8	9.8	19	20	8.2	12	6.7	23	18	18
20	8.7	18	10	9.8	18	18	7.2	60	8.7	14	17	20
21	8.7	18	9.2	9.8	22	18	9.2	35	39	9.9	12	19
22	8.7	19	7.7	9.8	23	750	13	14	10	9.6	9.8	19
23	8.7	14	6.2	9.2	17	35	12	10	9.2	7.3	8.2	18
24	10	8.2	6.2	9.8	19	22	9.8	9.2	13	5.8	7.2	18
25	9.8	9.8	5.8	8.7	21	46	11	6.2	12	6.5	9.2	14
26	7.7	9.8	6.7	9.8	19	25	6.7	9.8	16	5.0	11	19
27	5.8	9.2	9.2	14	18	18	6.7	11	17	7.7	12	14
28	489	8.2	1880	16	18	18	10	9.2	22	8.9	11	12
29	43	7.2	366	10	---	7.7	12	11	14	9.8	10	14
30	9.8	7.2	22	16	---	8.2	12	9.8	16	10	8.7	19
31	6.1	---	27	31	---	10	---	8.2	---	12	7.7	---
TOTAL	1221.7	301.1	8531.6	374.7	5882.3	10771.9	3344.8	419.0	323.6	321.0	344.1	508.0
MEAN	39.4	10.0	275	12.1	210	347	111	13.5	10.8	10.4	11.1	16.9
MAX	489	26	5750	31	2720	4210	1130	60	39	23	18	40
MIN	5.8	5.8	5.8	8.7	8.3	7.7	6.7	6.2	4.6	4.2	7.2	7.4
AC-FT	2420	597	16920	743	11670	21370	6630	831	642	637	683	1010

CAL YR 1974 TOTAL 48781.0 MEAN 134 MAX 12500 MIN 5.8 AC-FT 96760
WTR YR 1975 TOTAL 32343.8 MEAN 88.6 MAX 5750 MIN 4.2 AC-FT 64150

11098000 ARROYO SECO NEAR PASADENA, CALIF.

LOCATION.--Lat 34°13'20", long 118°10'36", in NW¼NW¼NE¼ sec.31, T.2 N., R.12 W., Los Angeles County, on right bank 1.5 mi (2.4 km) upstream from Millard Canyon, and 5.5 mi (8.8 km) northwest of Pasadena.

DRAINAGE AREA.--16.0 mi^2 (41.4 km^2).

PERIOD OF RECORD.--December 1910 to current year.

GAGE.--Water-stage recorder. Broad-crested weir since November 1938. Datum of gage is 1,397.88 ft (426.074 m) above mean sea level. Prior to Oct. 1, 1916, nonrecording gage at different datum. Oct. 1, 1916, to Oct. 19, 1945, water-stage recorder at datum 4.00 ft (1.219 m) lower.

AVERAGE DISCHARGE.--61 years (1913-15, 1916-75), 9.34 ft^3/s (0.264 m^3/s), 6,770 acre-ft/yr (8.35 hm^3/yr).

EXTREMES.--Current year: Maximum discharge, 535 ft^3/s (15.2 m^3/s) Mar. 6 (gage height, 3.58 ft or 1.091 m); minimum daily, 0.22 ft^3/s (0.006 m^3/s) Sept. 22-24.
Period of record: Maximum discharge, 8,620 ft^3/s (244 m^3/s) Mar. 2, 1938 (gage height, 9.42 ft or 2.871 m, present datum), on basis of slope-area measurement of maximum flow; no flow at times in some years.

REMARKS.--Records good. Minor regulation by debris dam 1.5 mi (2.4 km) upstream. No diversion above station. See schematic diagram of San Gabriel and Los Angeles River basins.

DISCHARGE, IN CUBIC FEET PER SECOND, WATER YEAR OCTOBER 1974 TO SEPTEMBER 1975
MEAN VALUES

DAY	OCT	NOV	DEC	JAN	FEB	MAR	APR	MAY	JUN	JUL	AUG	SEP
1	.65	2.2	1.3	2.1	1.6	2.2	5.0	5.8	2.2	1.2	.68	.34
2	.73	2.2	1.5	2.0	1.7	2.2	3.9	5.5	2.2	1.2	.63	.32
3	.73	1.8	1.7	2.0	13	2.1	3.5	5.5	2.2	1.2	.60	.30
4	.73	1.7	39	2.1	7.0	2.1	3.5	5.8	2.2	1.1	.59	.30
5	.73	1.5	5.2	2.0	4.8	7.5	9.3	5.5	2.0	.96	.59	.30
6	.72	1.4	3.3	1.9	4.8	165	14	5.2	2.1	.92	.56	.31
7	.99	1.4	2.3	1.9	4.5	46	9.6	5.0	2.1	.87	.55	.31
8	.81	1.4	2.0	2.0	4.5	67	8.3	5.0	2.2	.90	.57	.35
9	.90	1.3	1.8	2.0	8.0	40	13	4.8	2.2	.88	.54	.45
10	1.1	1.2	1.8	1.9	4.0	36	12	4.5	2.1	.85	.53	.43
11	1.2	1.2	1.8	1.9	3.8	25	12	4.5	2.1	.78	.50	.42
12	.99	1.2	1.8	1.9	3.8	15	10	4.3	2.2	.79	.51	.41
13	.99	1.2	1.7	1.9	3.5	9.5	9.1	4.3	2.1	.79	.50	.34
14	.99	1.2	1.7	1.8	3.5	8.1	9.1	4.3	1.9	.79	.49	.32
15	.90	1.2	1.7	1.8	3.5	7.2	13	4.3	1.9	.78	.49	.27
16	.81	1.3	1.6	1.8	3.4	6.6	11	4.5	1.9	.78	.45	.26
17	.81	1.3	1.7	1.7	3.4	13	9.5	4.6	2.0	.80	.46	.24
18	.81	1.3	1.6	1.7	3.4	8.5	8.7	4.5	2.1	.80	.48	.24
19	.81	1.4	1.6	1.7	3.2	8.1	8.0	4.5	2.1	.79	.48	.24
20	.90	1.4	1.7	1.7	3.2	8.1	7.5	5.4	2.1	.78	.48	.25
21	.90	1.4	1.8	1.8	3.0	8.0	7.3	3.8	2.0	.78	.48	.24
22	.90	1.5	1.9	1.7	2.7	19	7.1	3.3	1.9	.78	.44	.22
23	.99	1.4	1.9	1.8	2.7	9.5	6.7	3.3	1.7	.78	.40	.22
24	.99	1.3	1.9	1.8	2.7	8.0	6.4	3.1	1.6	.76	.43	.22
25	.99	1.3	1.9	1.8	2.5	8.7	6.9	2.8	1.5	.79	.41	.26
26	1.1	1.1	1.9	1.7	2.5	7.2	5.9	2.8	1.3	.76	.41	.28
27	1.2	1.1	1.9	1.7	2.4	6.4	6.3	3.0	1.2	.74	.39	.30
28	3.1	1.2	4.3	1.7	2.4	5.7	6.3	2.9	1.3	.75	.40	.31
29	3.1	1.1	3.7	1.6	---	5.0	6.0	2.5	1.3	.76	.40	.34
30	2.4	1.2	2.8	1.6	---	4.4	5.8	2.3	1.2	.75	.39	.34
31	2.0	---	2.4	1.6	---	4.5	---	2.3	---	.71	.38	---
TOTAL	34.97	41.4	103.2	56.6	109.5	565.6	244.7	129.9	56.9	26.32	15.21	9.13
MEAN	1.13	1.38	3.33	1.83	3.91	18.2	8.16	4.19	1.90	.85	.49	.30
MAX	3.1	2.2	39	2.1	13	165	14	5.8	2.2	1.2	.68	.45
MIN	.65	1.1	1.3	1.6	1.6	2.1	3.5	2.3	1.2	.71	.38	.22
AC-FT	69	82	205	112	217	1120	485	258	113	52	30	18

CAL YR 1974 TOTAL 2600.32 MEAN 7.12 MAX 245 MIN .58 AC-FT 5160
WTR YR 1975 TOTAL 1393.43 MEAN 3.82 MAX 165 MIN .22 AC-FT 2760

Peak discharge (base, 150 ft^3/s).--Mar. 6 (0415) 535 ft^3/s (3.58 ft).

11098500 LOS ANGELES RIVER NEAR DOWNEY, CALIF.

LOCATION.--Lat 33°56'58", long 118°10'23", in San Antonio Grant, Los Angeles County, on right bank 400 ft (122 m) downstream from Firestone Boulevard bridge, 1 mi (2 km) upstream from Rio Hondo, and 2.5 mi (4.0 km) west of Downey.

DRAINAGE AREA.--599 mi^2 (1,551 km^2).

PERIOD OF RECORD.--March 1928 to current year.

GAGE.--Water-stage recorder. Datum of gage is 96.12 ft (29.297 m) above mean sea level (levels by Los Angeles County Flood Control District). See WSP 1735 for history of changes prior to Dec. 11, 1956.

AVERAGE DISCHARGE.--47 years, 112 ft^3/s (3.172 m^3/s), 81,140 acre-ft/yr (100 hm^3/yr).

EXTREMES.--Current year: Maximum discharge, 53,950 ft^3/s (1,530 m^3/s) Dec. 4 (gage height, 8.80 ft or 2.682 m); minimum daily, 9.0 ft^3/s (0.25 m^3/s) Dec. 24, 25.
Period of record: Maximum discharge, 79,700 ft^3/s (2,260 m^3/s) Mar. 2, 1938, on basis of slope-area measurements; no flow at times in some years.

REMARKS.--Records fair. Flow regulated since September 1940 by Hansen flood-control reservoir, since December 1941 by Sepulveda flood-control reservoir, combined capacity, 49,400 acre-ft (60.9 hm^3/yr), and several small flood-control reservoirs. City of Los Angeles stores imported Owens River water in San Fernando and Chatsworth Reservoirs and at times discharges imported water into Los Angeles River. Many diversions for domestic use and irrigation above station. See schematic diagram of San Gabriel and Los Angeles River basins.

COOPERATION.--Records furnished by Los Angeles County Flood Control District.

DISCHARGE, IN CUBIC FEET PER SECOND, WATER YEAR OCTOBER 1974 TO SEPTEMBER 1975
MEAN VALUES

DAY	OCT	NOV	DEC	JAN	FEB	MAR	APR	MAY	JUN	JUL	AUG	SEP
1	16	14	11	22	15	24	25	20	13	20	18	20
2	16	37	14	16	609	22	24	18	14	17	18	21
3	16	11	17	18	4210	21	21	20	13	15	18	24
4	17	13	8480	19	663	21	23	17	14	13	18	19
5	15	11	170	20	98	1060	1090	15	13	11	19	22
6	16	12	30	20	32	5280	384	21	13	12	20	20
7	239	13	26	20	24	290	175	21	12	13	17	17
8	140	15	23	17	21	3600	187	17	14	15	16	19
9	34	14	19	15	1620	164	780	17	16	21	21	23
10	21	13	15	18	476	515	90	19	16	18	20	22
11	23	11	15	18	56	358	52	15	16	17	21	21
12	15	15	13	15	28	61	154	17	15	16	21	22
13	15	17	14	14	23	106	34	22	15	15	23	21
14	11	16	11	15	23	472	31	19	20	18	24	19
15	12	15	13	13	22	32	276	21	14	26	23	19
16	14	14	12	14	23	72	47	21	13	22	20	33
17	12	16	15	14	21	41	26	19	20	21	18	50
18	15	14	15	14	23	26	20	18	70	23	18	27
19	15	15	15	14	25	21	19	19	52	32	24	24
20	11	12	15	14	27	27	15	65	40	22	24	26
21	11	13	15	14	26	26	17	60	31	19	21	25
22	13	35	12	14	28	1330	22	22	18	19	20	23
23	12	23	11	13	22	52	21	20	15	19	19	26
24	15	12	9.0	14	25	31	17	19	17	18	16	28
25	18	11	9.0	15	27	65	25	16	18	18	20	27
26	14	12	11	15	26	36	12	16	19	17	24	28
27	12	14	14	37	24	30	12	19	17	16	24	27
28	545	14	2550	22	25	30	17	15	18	18	24	23
29	90	12	565	14	---	19	18	17	15	24	24	22
30	15	11	31	20	---	17	22	16	15	22	25	27
31	15	---	31	37	---	21	---	15	---	18	21	---
TOTAL	1433	455	12201.0	545	8244	13870	3656	656	596	575	639	725
MEAN	46.2	15.2	394	17.6	294	447	122	21.2	19.9	18.5	20.6	24.2
MAX	545	37	8480	37	4210	5280	1090	65	70	32	25	50
MIN	11	11	9.0	13	15	17	12	15	12	11	16	17
AC-FT	2840	902	24200	1080	16350	27510	7250	1300	1180	1140	1270	1440

CAL YR 1974 TOTAL 63945.0 MEAN 175 MAX 15700 MIN 9.0 AC-FT 126800
WTR YR 1975 TOTAL 43595.0 MEAN 119 MAX 8480 MIN 9.0 AC-FT 86470

11101250 RIO HONDO ABOVE WHITTIER NARROWS DAM, CALIF.

LOCATION.--Lat 34°03'32", long 118°04'13", in Potrero Grande Grant, Los Angeles County, on right bank 0.3 mi (0.5 km) downstream from Garvey Avenue, 0.4 mi (0.6 km) downstream from Rubio Wash, and 2.2 mi (3.5 km) west of El Monte.

DRAINAGE AREA.--91.2 mi^2 (236.2 km^2).

PERIOD OF RECORD.--February 1956 to current year.

GAGE.--Water-stage recorder. Datum of gage is 217.8 ft (66.39 m) above mean sea level.

AVERAGE DISCHARGE.--19 years, 31.2 ft^3/s (0.884 m^3/s), 22,600 acre-ft/yr (27.9 hm^3/yr).

EXTREMES.--Current year: Maximum discharge, 10,200 ft^3/s (289 m^3/s) Dec. 4 (gage height, 5.37 ft or 1.637 m); minimum daily, 0.53 ft^3/s (0.015 m^3/s) Aug. 17.
Period of record: Maximum discharge, 17,700 ft^3/s (501 m^3/s) Jan. 25, 1969 (gage height, 7.23 ft or 2.204 m); no flow for some days in some years.

REMARKS.--Records fair. Flow regulated by Big Santa Anita, Sawpit, and Eaton flood-control reservoirs, combined capacity, 1,700 acre-ft (2.01 hm^3) and Sierra Madre, Las Flores, and Rubio debris basins. Many diversions above station for domestic use and irrigation. Los Angeles County Flood Control District diverted 464 acre-ft (572,000 m^3) of water from San Gabriel River below Santa Fe Dam to Rio Hondo during current year. See schematic diagram of San Gabriel and Los Angeles River basins.

COOPERATION.--Records of diversion furnished by the Los Angeles County Flood Control District.

DISCHARGE, IN CUBIC FEET PER SECOND, WATER YEAR OCTOBER 1974 TO SEPTEMBER 1975
MEAN VALUES

DAY	OCT	NOV	DEC	JAN	FEB	MAR	APR	MAY	JUN	JUL	AUG	SEP
1	1.9	1.9	1.7	1.7	1.3	2.9	2.5	1.6	1.6	2.9	1.9	1.8
2	2.5	2.3	2.5	2.6	76	2.7	1.0	1.4	1.7	2.9	1.2	1.1
3	2.9	1.3	55	1.9	545	2.5	1.3	1.6	1.7	2.7	1.1	1.5
4	2.7	1.5	1190	2.0	87	2.1	1.5	1.4	2.1	2.1	1.9	1.1
5	2.3	1.3	4.9	2.2	11	249	158	1.2	1.7	2.3	2.5	1.6
6	2.3	1.7	1.6	2.1	2.5	366	45	1.4	1.7	2.5	2.2	.85
7	27	2.1	1.3	2.4	1.7	32	5.3	1.9	1.8	3.1	2.4	.68
8	5.7	2.1	1.3	2.8	1.5	319	52	2.3	1.6	3.1	2.3	.97
9	1.7	1.5	1.3	2.4	229	2.8	60	2.1	1.5	3.1	1.5	1.6
10	1.7	1.5	1.3	2.3	84	127	4.3	2.3	1.7	2.9	1.6	.93
11	1.7	2.1	1.4	2.5	3.1	5.8	2.0	2.7	1.6	3.8	2.6	.92
12	1.9	2.6	1.6	2.7	3.1	1.9	1.3	3.6	1.9	2.7	1.8	.73
13	1.7	2.8	1.8	2.8	1.8	145	1.3	4.3	1.9	1.9	1.2	.74
14	1.9	2.3	1.7	4.5	1.6	41	1.2	3.8	2.3	2.9	.86	.75
15	1.7	2.0	1.6	3.3	1.6	1.2	37	2.7	1.6	3.1	1.2	.83
16	2.1	2.4	1.9	5.7	1.8	5.5	1.6	2.3	1.9	3.4	.76	2.2
17	2.5	2.1	2.2	3.7	2.0	1.6	1.3	1.7	2.3	3.1	.53	1.7
18	2.5	1.7	1.9	2.7	2.7	1.5	.96	1.6	4.6	1.9	1.4	1.6
19	2.1	1.8	2.3	2.9	2.4	1.3	.96	3.8	1.9	1.7	1.7	1.9
20	2.1	1.7	2.1	3.4	2.9	1.3	1.1	28	1.4	1.7	1.7	1.0
21	2.1	3.6	1.9	2.4	2.9	1.2	1.4	6.9	1.4	1.7	1.7	.72
22	2.1	6.9	1.8	2.2	2.4	189	1.4	1.2	1.2	2.1	1.0	1.5
23	2.2	2.0	2.6	1.9	2.4	1.2	1.2	1.2	1.7	2.5	.84	1.9
24	2.2	1.4	3.1	1.8	3.4	1.3	2.3	1.2	2.1	2.5	.73	2.1
25	2.2	1.4	1.4	2.1	2.6	19	11	1.2	2.7	2.4	1.5	2.5
26	2.1	1.6	2.0	2.0	2.6	1.5	.96	1.2	2.9	2.0	1.4	2.5
27	2.0	1.5	2.2	14	3.3	1.1	.72	1.7	2.7	2.0	.99	2.3
28	210	1.2	373	2.2	3.0	.91	1.1	1.8	2.1	2.1	.64	2.0
29	1.7	1.3	29	1.3	---	.83	1.6	2.1	2.3	2.1	1.2	3.7
30	1.3	5.3	2.9	6.1	---	.76	1.4	2.2	2.5	1.7	.75	4.2
31	1.6	---	3.0	1.9	---	3.0	---	1.9	---	1.6	.67	---
TOTAL	300.4	64.9	1702.3	94.5	1084.6	1531.90	402.70	94.3	60.1	76.5	43.77	47.92
MEAN	9.69	2.16	54.9	3.05	38.7	49.4	13.4	3.04	2.00	2.47	1.41	1.60
MAX	210	6.9	1190	14	545	366	158	28	4.6	3.8	2.6	4.2
MIN	1.3	1.2	1.3	1.3	1.3	.76	.72	1.2	1.2	1.6	.53	.68
AC-FT	596	129	3380	187	2150	3040	799	187	119	152	87	95

CAL YR 1974 TOTAL 9555.71 MEAN 26.2 MAX 1800 MIN .62 AC-FT 18950
WTR YR 1975 TOTAL 5503.89 MEAN 15.1 MAX 1190 MIN .53 AC-FT 10920

11101500 RIO HONDO NEAR MONTEBELLO, CALIF.

LOCATION.--Lat 34°02'00", long 118°04'22", in Potrero Grande Grant, Los Angeles County, on right bank 900 ft (274 m) upstream from Mission bridge, and 2 mi (3 km) northeast of Montebello.

DRAINAGE AREA.--116 mi^2 (300 km^2), excludes area above Santa Fe Dam.

PERIOD OF RECORD.--October 1928 to current year.

GAGE.--Water-stage recorder. Datum of gage is 190.77 ft (58.147 m) above mean sea level (levels by Los Angeles County Flood Control District). See WSP 1735 for history of changes prior to September 1962.

AVERAGE DISCHARGE.--29 years (1928-57), 51.5 ft^3/s (1.458 m^3/s), 37,280 acre-ft/yr (46.0 hm^3/yr).

EXTREMES.--Current year: Maximum discharge, 12,670 ft^3/s (359 m^3/s) Dec. 4 (gage height, 11.75 ft or 3.581 m); minimum daily, 1.4 ft^3/s (0.040 m^3/s) Sept. 7.
Period of record: Maximum discharge, 28,000 ft^3/s (793 m^3/s) Mar. 2, 1938 (gage height, 16.69 ft or 5.087 m, present datum), from rating curve extended above 9,000 ft^3/s (255 m^3/s) on basis of slope-area measurement and runoff from contributing stream; no flow for some days in 1964-65.

REMARKS.--Records poor. Flow regulated by Big Santa Anita, Sawpit, and Eaton flood-control reservoirs, combined capacity, 1,700 acre-ft (2.10 hm^3) and Sierra Madre, Las Flores, and Rubio debris basins. Many diversions above station for domestic use and irrigation. At times flow is diverted from San Gabriel River below Santa Fe Dam to Rio Hondo above station. Since 1957, with the exception of 1972, imported Colorado River water has been released to Rio Hondo 1.6 mi (2.6 km) above station for ground-water recharge. See schematic diagram of San Gabriel and Los Angeles River basins.

COOPERATION.--Records furnished by Los Angeles County Flood Control District.

DISCHARGE, IN CUBIC FEET PER SECOND, WATER YEAR OCTOBER 1974 TO SEPTEMBER 1975
MEAN VALUES

DAY	OCT	NOV	DEC	JAN	FEB	MAR	APR	MAY	JUN	JUL	AUG	SEP
1	2.0	3.0	3.2	6.0	5.0	4.9	4.0	5.8	4.0	4.3	3.4	2.3
2	2.0	3.0	3.2	6.0	72	4.9	4.0	6.3	3.6	4.3	3.2	1.5
3	2.0	3.1	17	5.8	762	5.1	4.0	5.8	3.4	4.0	2.6	1.5
4	2.0	3.2	1650	5.6	150	4.3	4.0	5.5	3.6	4.7	2.6	2.1
5	2.0	3.3	12	5.4	20	313	200	5.2	3.4	4.5	2.8	2.6
6	2.0	3.4	9.4	5.3	14	536	96	4.8	3.0	4.5	2.8	2.3
7	13	3.5	7.9	5.2	13	77	52	4.5	3.0	4.7	1.9	1.4
8	5.0	3.6	6.8	5.1	12	475	91	4.0	3.0	4.9	1.9	1.5
9	3.0	3.7	6.6	5.0	333	10	135	3.8	3.0	4.9	1.9	1.5
10	2.0	3.8	6.3	4.8	118	163	5.6	3.6	3.5	4.7	1.5	2.0
11	2.0	3.9	6.0	4.6	8.0	19	3.8	3.6	3.5	4.7	1.7	2.0
12	2.0	4.0	6.6	4.4	5.0	14	3.4	3.6	3.5	4.7	1.5	2.5
13	2.0	4.0	7.4	4.3	4.5	146	3.2	3.8	3.5	4.3	1.5	2.5
14	2.0	4.0	7.6	4.2	4.6	92	3.6	4.3	3.5	4.0	1.6	3.0
15	2.0	4.0	6.8	4.1	4.6	13	48	4.0	3.5	4.3	1.6	3.0
16	2.0	3.9	6.6	4.0	4.7	10	6.0	4.3	3.5	4.5	1.7	3.5
17	2.0	3.8	5.5	4.0	4.8	4.0	6.0	3.8	4.0	4.7	1.7	3.8
18	2.0	3.8	4.5	4.0	4.8	4.0	6.9	3.8	5.0	4.3	1.8	2.6
19	2.0	3.7	4.0	4.0	4.9	4.0	5.6	3.8	4.0	3.6	1.8	2.8
20	2.0	3.7	4.0	4.0	5.0	4.0	4.5	19	3.6	3.7	1.9	3.4
21	2.0	3.6	4.0	4.0	4.5	4.0	4.7	3.8	3.6	3.8	2.0	3.2
22	2.0	3.5	4.0	4.0	4.0	290	4.7	3.6	3.8	3.8	2.1	3.1
23	2.0	3.4	4.0	4.0	5.4	8.0	4.5	3.6	3.8	3.4	2.2	3.0
24	2.0	3.3	4.0	4.0	6.6	4.0	4.9	3.6	3.8	3.4	2.3	3.0
25	2.0	3.2	4.0	4.0	5.6	26	12	3.8	3.8	3.3	2.4	3.4
26	2.0	3.2	4.0	4.0	4.9	4.0	5.5	3.6	4.5	3.2	2.5	2.8
27	2.0	3.2	4.0	12	4.3	4.0	5.5	4.0	4.3	3.1	2.5	3.0
28	347	3.2	433	5.0	4.9	4.0	5.5	4.0	4.0	3.0	2.6	2.8
29	5.0	3.2	6.0	5.0	---	4.0	5.6	4.0	3.8	3.0	2.6	3.2
30	4.0	3.2	6.0	5.0	---	4.0	5.8	4.3	3.6	3.0	2.5	4.0
31	3.0	---	6.0	5.0	---	4.0	---	4.3	---	3.0	1.9	---
TOTAL	428.0	105.4	2260.4	151.8	1590.1	2259.2	745.3	145.9	110.1	124.3	67.0	79.3
MEAN	13.8	3.51	72.9	4.90	56.8	72.9	24.8	4.71	3.67	4.01	2.16	2.64
MAX	347	4.0	1650	12	762	536	200	19	5.0	4.9	3.4	4.0
MIN	2.0	3.0	3.2	4.0	4.0	4.0	3.2	3.6	3.0	3.0	1.5	1.4
AC-FT	849	209	4480	301	3150	4480	1480	289	218	247	133	157

CAL YR 1974 TOTAL 13015.5 MEAN 35.7 MAX 2560 MIN 2.0 AC-FT 25820
WTR YR 1975 TOTAL 8066.8 MEAN 22.1 MAX 1650 MIN 1.4 AC-FT 16000

11102000 MISSION CREEK NEAR MONTEBELLO, CALIF.

LOCATION.--Lat 34°01'45", long 118°04'07", in La Merced Grant, Los Angeles County, on upstream side of right abutment of San Gabriel Boulevard bridge, 2 mi (3 km) northeast of Montebello.

DRAINAGE AREA.--4.16 mi^2 (10.77 km^2).

PERIOD OF RECORD.--October 1929 to current year. Yearly estimate for 1938, published in WSP 1315-B. Prior to October 1944, published as Rio Hondo Slough near Montebello.

GAGE.--Water-stage recorder. Datum of gage is 188.2 ft (57.36 m) above mean sea level. Prior to Nov. 3, 1938, at datum 6.30 ft (1.920 m) higher.

AVERAGE DISCHARGE.--46 years, 10.4 ft^3/s (0.295 m^3/s), 7,530 acre-ft/yr (9.28 hm^3/yr).

EXTREMES.--Current year: Maximum daily discharge, 0.20 ft^3/s (0.006 m^3/s) Feb. 3; no flow most of year.
Period of record: Maximum discharge not determined, occurred Mar. 2, 1938; no flow at times in some years.

REMARKS.--Records poor. Flow is almost entirely from ground-water seepage. Flow partially regulated above station by Legg Lake. No diversion above station. See schematic diagram of San Gabriel and Los Angeles River basins.

COOPERATION.--Records furnished by Los Angeles County Flood Control District.

DISCHARGE, IN CUBIC FEET PER SECOND, WATER YEAR OCTOBER 1974 TO SEPTEMBER 1975
MEAN VALUES

DAY	OCT	NOV	DEC	JAN	FEB	MAR	APR	MAY	JUN	JUL	AUG	SEP
1			0		0							
2			0		0							
3			0		.20							
4			.10		0							
5			0		0							
6			0		0							
7			0		0							
8			0		0							
9			0		0							
10			0		0							
11			0		0							
12			0		0							
13			0		0							
14			0		0							
15			0		0							
16			0		0							
17			0		0							
18			0		0							
19			0		0							
20			0		0							
21			0		0							
22			0		0							
23			0		0							
24			0		0							
25			0		0							
26			0		0							
27			0		0							
28			0		0							
29			0		---							
30			0		---							
31		---	0		---		---		---			---
TOTAL	0	0	.10	0	.20	0	0	0	0	0	0	0
MEAN	0	0	.003	0	.007	0	0	0	0	0	0	0
MAX	0	0	.10	0	.20	0	0	0	0	0	0	0
MIN	0	0	0	0	0	0	0	0	0	0	0	0
AC-FT	0	0	.2	0	.4	0	0	0	0	0	0	0

CAL YR 1974 TOTAL 59.10 MEAN .16 MAX 15 MIN 0 AC-FT 117
WTR YR 1975 TOTAL 0.30 MEAN .001 MAX .20 MIN 0 AC-FT 60

11102300 RIO HONDO BELOW WHITTIER NARROWS DAM, CALIF.

LOCATION.--Lat 34°01'00", long 118°05'15", in Paso de Bartolo Grant, Los Angeles County, on right levee 0.2 mi (0.3 km) upstream from Beverly Boulevard, 0.4 mi (0.6 km) downstream from axis of Whittier Narrows Dam, and 1.0 mi (1.6 km) northeast of Montebello.

DRAINAGE AREA.--124 mi^2 (321 km^2).

PERIOD OF RECORD.--October 1966 to current year.

GAGE.--Water-stage recorder. Altitude of gage is 175 ft (53 m), from topographic map.

EXTREMES.--Current year: Maximum discharge, 12,140 ft^3/s (344 m^3/s) Dec. 4 (gage height, 7.28 ft or 2.219 m); no flow for several days.

Period of record: Maximum discharge, 38,800 ft^3/s (1,100 m^3/s) Jan. 25, 1969 (gage height, 13.82 ft or 4.212 m), from rating curve extended above 15,000 ft^3/s (425 m^3/s) on basis of gate openings at dam at gage heights 12.32 ft (3.755 m) and 13.82 ft (4.212 m); no flow at times in each year.

REMARKS.--Records poor. Flow regulated by Whittier Narrows flood-control reservoir, capacity, 36,160 acre-ft (44.6 hm^3). There are several small flood-control reservoirs, combined capacities, 1,700 acre-ft (2.10 hm^3) and several small debris basins above Whittier Narrows Dam. Many diversions for domestic use and irrigation. At times flow is diverted from San Gabriel River to Rio Hondo from sites below Santa Fe Dam and above Whittier Narrows Dam. See schematic diagram of San Gabriel and Los Angeles River basins.

DISCHARGE, IN CUBIC FEET PER SECOND, WATER YEAR OCTOBER 1974 TO SEPTEMBER 1975
MEAN VALUES

DAY	OCT	NOV	DEC	JAN	FEB	MAR	APR	MAY	JUN	JUL	AUG	SEP
1	.24	27	58	30	47	146	130	112	90	97	30	22
2	0	29	56	30	72	129	130	78	96	136	19	10
3	0	27	39	59	657	126	130	76	108	100	22	12
4	17	70	2020	142	323	111	130	79	113	48	40	22
5	121	121	115	142	79	228	230	85	119	57	37	24
6	121	121	29	146	25	651	140	100	111	31	47	13
7	110	84	116	146	24	150	80	95	105	6.4	5.2	16
8	33	43	117	116	31	538	110	99	92	11	6.8	22
9	39	110	110	58	402	105	150	110	81	7.5	6.8	22
10	105	110	110	60	221	238	50	126	109	6.9	6.8	22
11	90	116	115	79	66	95	11	126	112	13	6.8	11
12	107	120	117	71	51	68	11	65	105	28	6.8	0
13	108	120	117	77	51	115	11	27	106	46	12	0
14	109	115	119	119	49	247	11	33	105	66	16	0
15	108	115	114	144	56	59	11	42	110	62	12	0
16	108	115	116	146	52	67	11	64	105	36	12	0
17	106	115	116	147	64	90	11	34	105	38	8.4	0
18	92	115	95	145	97	167	11	36	105	43	0	0
19	112	84	92	143	96	161	11	38	107	43	12	0
20	110	51	99	147	98	73	11	80	115	34	22	0
21	124	43	100	145	110	76	11	97	127	60	19	0
22	97	24	99	144	69	420	11	121	121	67	14	0
23	25	30	73	144	111	100	11	93	101	30	14	0
24	25	51	29	88	103	100	11	87	63	22	14	0
25	25	55	28	46	93	100	11	72	66	16	14	0
26	26	51	27	45	90	110	11	82	74	19	22	19
27	27	52	28	60	96	120	11	63	72	16	22	71
28	278	50	388	79	137	130	11	45	64	16	24	81
29	30	51	150	60	---	130	142	41	60	8.4	22	51
30	27	53	34	51	---	130	134	39	71	3.5	22	3.6
31	28	---	34	48	---	130	---	78	---	19	22	---
TOTAL	2308.24	2268	4862	3057	3370	5110	1754	2323	2918	1186.7	537.6	421.6
MEAN	74.5	75.6	157	98.6	120	165	58.5	74.9	97.3	38.3	17.3	14.1
MAX	278	121	2020	147	657	651	230	126	127	136	47	81
MIN	0	24	27	30	24	59	11	27	60	3.5	0	0
AC-FT	4580	4500	9640	6060	6680	10140	3480	4610	5790	2350	1070	836

CAL YR 1974 TOTAL 36217.00 MEAN 99.2 MAX 3180 MIN 0 AC-FT 71840
WTR YR 1975 TOTAL 30116.14 MEAN 82.5 MAX 2020 MIN 0 AC-FT 59740

11102500 RIO HONDO NEAR DOWNEY, CALIF.

LOCATION.--Lat 33°56'48", long 118°09'43", in San Antonio Grant, Los Angeles County, on left bank 700 ft (213 m) upstream from Stewart and Gray Road bridge, 1.0 mi (1.6 km) upstream from mouth, and 1.5 mi (2.4 km) west of Downey.

DRAINAGE AREA.--143 mi^2 (370 km^2), excludes area above Santa Fe Dam.

PERIOD OF RECORD.--March 1928 to current year.

GAGE.--Water-stage recorder. Datum of gage is 91.4 ft (27.86 m) above mean sea level (levels by Los Angeles County Flood Control District). Prior to Oct. 31, 1951, at site 700 ft (213 m) downstream at datum 1.5 ft (0.46 m) lower.

EXTREMES.--Current year: Maximum discharge, 13,250 ft^3/s (375 m^3/s) Dec. 4 (gage height, 7.45 ft or 2.271 m); no flow many days.
Period of record: Maximum discharge, 46,900 ft^3/s (1,330 m^3/s) Jan. 25, 1969 (gage height, 15.15 ft or 4.618 m); no flow at times in most years.

REMARKS.--Records fair. Flow regulated since January 1956 by Whittier Narrows flood-control reservoir, capacity, 36,160 acre-ft (44.6 hm^3). There are several small flood-control reservoirs, combined capacity, 1,700 acre-ft (2.10 hm^3) and several debris basins above Whittier Narrows Dam. Many diversions above station for domestic use and irrigation. At times flow is diverted from San Gabriel River below Santa Fe Dam and above Whittier Narrows Dam to Rio Hondo above station. Since 1937 much of the flow in Rio Hondo has been diverted to percolation basin from a site 5.5 mi (8.8 km) upstream. See schematic diagram of San Gabriel and Los Angeles River basins.

COOPERATION.--Records furnished by Los Angeles County Flood Control District.

DISCHARGE, IN CUBIC FEET PER SECOND, WATER YEAR OCTOBER 1974 TO SEPTEMBER 1975
MEAN VALUES

DAY	OCT	NOV	DEC	JAN	FEB	MAR	APR	MAY	JUN	JUL	AUG	SEP
1	.10	.10	.10	0	.10	.80	.60	.10	.30	.30	0	0
2	.30	0	.10	0	52	.60	.80	.10	.10	.30	.10	0
3	.10	0	4.2	0	303	.60	.80	.10	.10	.40	0	.10
4	.10	0	1850	0	65	.80	.60	.10	.30	.10	0	0
5	.30	0	1.4	.10	2.0	105	24	0	.10	.10	0	0
6	.40	0	.30	.30	.80	50	5.1	.10	.10	.10	0	0
7	.60	0	.10	.40	11	8.8	1.2	.10	.10	.30	0	0
8	.30	0	0	.60	.80	110	39	.10	.10	.40	0	0
9	.10	0	0	.10	204	1.4	13	.10	.10	.30	0	0
10	.10	0	0	.10	48	34	.10	.10	.10	0	.10	0
11	.10	.10	0	.30	1.2	3.4	.10	.30	.30	0	0	0
12	.10	.10	.10	.30	.80	1.2	.10	.10	.10	0	0	0
13	.10	.10	.30	.30	.60	17	.10	.10	.10	0	0	.10
14	.10	.10	.10	.30	.40	10	.10	.10	.10	0	0	0
15	.30	.30	.10	.40	.10	.60	7.1	.10	.10	0	0	0
16	.10	.10	.30	.60	.40	3.4	.10	.10	.10	0	0	0
17	.30	.10	.30	.30	.10	.30	.40	.10	.10	0	0	.10
18	.60	.10	.30	.30	.30	.60	0	.10	.10	0	0	0
19	.40	.10	.30	.40	.40	.80	0	.10	.10	0	0	0
20	.40	.30	.40	.40	.80	.60	0	2.0	.10	0	0	0
21	.60	.10	.10	.80	.60	.60	0	.10	.10	0	.10	0
22	.40	1.2	.10	.40	.30	150	.10	.10	.10	.10	0	0
23	.40	0	0	.30	.40	.80	.10	.10	.10	0	0	0
24	.30	0	0	.30	.40	.60	.10	.10	.30	0	0	0
25	.30	0	0	.30	.80	1.2	.80	.10	.30	0	0	0
26	.30	0	0	.30	.80	.10	.10	0	.30	0	0	.10
27	.30	.10	0	.30	.80	.10	0	.10	.30	.10	0	.60
28	70	.10	213	.40	.80	.10	0	.10	.30	0	0	.40
29	.80	.10	11	.10	---	.10	.10	.10	.30	0	0	.30
30	.30	.10	.60	.40	---	.60	.10	.10	1.0	0	0	.30
31	.10	---	.30	.10	---	1.0	---	.10	---	0	0	---
TOTAL	78.70	3.20	2083.50	8.90	696.70	505.10	94.60	5.00	5.70	2.50	.30	2.00
MEAN	2.54	.11	67.2	.29	24.9	16.3	3.15	.16	.19	.081	.010	.067
MAX	70	1.2	1850	.80	303	150	39	2.0	1.0	.40	.10	.60
MIN	.10	0	0	0	.10	.10	0	0	.10	0	0	0
AC-FT	156	6.3	4130	18	1380	1000	188	9.9	11	5.0	.6	4.0

CAL YR 1974 TOTAL 7511.94 MEAN 20.6 MAX 3360 MIN 0 AC-FT 14900
WTR YR 1975 TOTAL 3486.20 MEAN 9.55 MAX 1850 MIN 0 AC-FT 6910

11103000 LOS ANGELES RIVER AT LONG BEACH, CALIF.

LOCATION.--Lat 33°49'02", long 118°12'20", in Los Cerritos Grant, Los Angeles County, on right bank 5,000 ft (1,524 m) upstream from Willow Street, 3.4 mi (5.5 km) north of Long Beach, and 3.7 mi (6.0 km) upstream from mouth.

DRAINAGE AREA.--827 mi^2 (2,142 km^2), revised.

PERIOD OF RECORD.--December 1928 to current year.

GAGE.--Water-stage recorder. Datum of gage is 11.91 ft (3.630 m) above mean sea level (levels by Los Angeles County Flood Control District). See WSP 1735 for history of changes prior to Jan. 19, 1956.

AVERAGE DISCHARGE.--46 years (1929-75), 167 ft^3/s (4.729 m^3/s), 121,000 acre-ft/yr (149 hm^3/yr).

EXTREMES.--Current year: Maximum discharge, 64,500 ft^3/s (1,830 m^3/s) Dec. 4 (gage height, 12.25 ft or 3.734 m); minimum daily, 13 ft^3/s (0.37 m^3/s) Dec. 25.
Period of record: Maximum discharge, 102,000 ft^3/s (2,890 m^3/s) Jan. 25, 1969 (gage height, 16.00 ft or 4.877 m); no flow at times in 1929-30, 1934.

REMARKS.--Records fair. Flow regulated since September 1940 by Hansen flood-control reservoir, since December 1941 by Sepulveda flood-control reservoir, combined capacity, 49,400 acre-ft (60.9 hm^3), and several small flood-control reservoirs. City of Los Angeles stores imported Owens River water in San Fernando and Chatsworth reservoirs and at times discharges imported water into Los Angeles River above station. Many diversions above station for domestic use and irrigation. AVERAGE DISCHARGE represents flow to the ocean, regardless of upstream development. See schematic diagram of San Gabriel and Los Angeles River basins.

COOPERATION.--Records furnished by Los Angeles County Flood Control District.

DISCHARGE, IN CUBIC FEET PER SECOND, WATER YEAR OCTOBER 1974 TO SEPTEMBER 1975
MEAN VALUES

DAY	OCT	NOV	DEC	JAN	FEB	MAR	APR	MAY	JUN	JUL	AUG	SEP
1	24	19	18	29	27	36	40	33	21	32	29	27
2	24	49	19	20	233	38	35	30	28	31	30	31
3	23	19	32	21	5410	38	28	30	26	30	24	33
4	23	19	11200	23	950	45	27	27	26	27	25	32
5	22	20	247	23	217	1140	1090	21	26	15	31	36
6	19	19	49	23	45	5330	619	31	26	19	37	36
7	262	20	30	28	42	518	363	31	26	19	34	30
8	179	23	32	28	28	3940	264	27	26	23	35	31
9	50	21	21	24	2710	302	1230	26	26	28	39	37
10	29	19	18	24	876	792	119	29	26	26	35	35
11	28	19	19	27	126	762	97	26	25	27	34	32
12	21	25	18	20	36	94	223	26	25	20	36	31
13	15	30	18	19	31	89	51	37	24	19	35	32
14	16	26	16	19	31	753	41	32	31	19	36	29
15	21	24	15	19	26	60	423	32	22	29	37	23
16	23	22	17	25	26	107	98	32	21	27	31	29
17	24	22	23	27	25	67	96	29	29	26	28	61
18	28	21	24	26	29	44	34	25	70	28	28	30
19	29	25	22	25	32	33	28	23	62	38	36	29
20	23	30	23	22	35	41	22	81	57	33	35	29
21	21	32	24	29	32	33	23	101	42	28	33	30
22	27	327	19	24	36	1860	34	32	31	33	33	29
23	26	40	16	24	27	116	32	28	24	33	31	35
24	27	22	14	20	32	51	27	27	30	31	28	34
25	27	19	13	24	35	68	51	23	29	33	30	32
26	22	21	15	24	34	49	26	21	29	31	36	33
27	18	23	19	29	32	39	21	30	29	26	32	35
28	984	22	2880	65	34	36	23	28	31	26	31	28
29	224	19	1060	24	---	29	33	28	25	34	34	26
30	35	18	54	33	---	20	34	27	25	32	32	32
31	22	---	71	65	---	35	---	26	---	29	30	---
TOTAL	2316	1015	16046	833	11197	16565	5232	999	918	852	1005	967
MEAN	74.7	33.8	518	26.9	400	534	174	32.2	30.6	27.5	32.4	32.2
MAX	984	327	11200	65	5410	5330	1230	101	70	38	39	61
MIN	15	18	13	19	25	20	21	21	21	15	24	23
AC-FT	4590	2010	31830	1650	22210	32860	10380	1980	1820	1690	1990	1920

CAL YR 1974 TOTAL 79131 MEAN 217 MAX 17200 MIN 13 AC-FT 157000
WTR YR 1975 TOTAL 57945 MEAN 159 MAX 11200 MIN 13 AC-FT 114900

11103010 LOS ANGELES RIVER AT WILLOW STREET BRIDGE, AT LONG BEACH, CALIF.
(National stream-quality accounting network station)

LOCATION.--Lat 33°48'16", long 118°12'15", in Los Cerritos Grant, Los Angeles County, on the Willow Street Bridge, 2.8 mi (4.5 km) upstream from mouth in Long Beach.

DRAINAGE AREA.--831 mi^2 (2,152 km^2).

PERIOD OF RECORD.--Chemical analyses: February 1973 to current year.
Specific conductance: October 1973 to current year.
Water temperatures: October 1973 to current year.
Sediment records: Water year 1975 (partial-record station).

EXTREMES.--Current year:
Specific conductance: Maximum recorded, 2,010 micromhos June 30; minimum recorded, 117 micromhos Mar. 6.
Water temperatures: Maximum recorded, 34.5°C Aug. 7; minimum recorded, 2.0°C Jan. 31.
Period of record:
Specific conductance: Maximum recorded, 2,010 micromhos June 30, 1975; minimum recorded, 117 micromhos Mar. 6, 1975.
Water temperatures: Maximum recorded, 34.5°C Aug. 7, 1975; minimum recorded, 2.0°C Jan. 31, 1975.

REMARKS.--Discharge values from Los Angeles River at Long Beach (sta 11103000). Periods of missing temperature and conductivity data due to equipment malfunction.

WATER QUALITY DATA, WATER YEAR OCTOBER 1974 TO SEPTEMBER 1975

DATE	TIME	INSTANTANEOUS DISCHARGE (CFS)	DISSOLVED SILICA (SIO2) (MG/L)	DISSOLVED CALCIUM (CA) (MG/L)	DISSOLVED MAGNESIUM (MG) (MG/L)	DISSOLVED SODIUM (NA) (MG/L)	DISSOLVED POTASSIUM (K) (MG/L)	BICARBONATE (HCO3) (MG/L)	CARBONATE (CO3) (MG/L)	ALKALINITY AS CACO3 (MG/L)	DISSOLVED SULFATE (SO4) (MG/L)
OCT.											
08...	1030	200	11	58	12	43	11	123	--	101	96
NOV.											
04...	1120	19	19	110	33	150	8.0	271	26	266	240
DEC.											
03...	1200	32	14	100	29	110	8.2	282	0	231	220
JAN.											
03...	1115	21	23	91	28	200	8.4	234	--	192	300
FEB.											
07...	1100	21	24	100	31	100	6.8	235	--	193	230
MAR.											
04...	1040	45	6.3	92	40	250	8.6	249	0	204	220
APR.											
24...	1150	27	16	86	36	120	8.4	162	30	183	250
MAY											
19...	1115	23	17	83	45	110	9.2	206	30	219	230
JUNE											
17...	1145	29	24	88	32	120	8.4	242	5	207	230
JULY											
16...	1140	31	25	90	35	120	8.9	254	12	228	240
AUG.											
18...	1115	28	23	96	39	120	8.9	228	28	234	260
SEP.											
17...	1110	63	23	93	27	96	19	233	0	191	220

DATE	DISSOLVED CHLORIDE (CL) (MG/L)	DISSOLVED FLUORIDE (F) (MG/L)	TOTAL NITRITE PLUS NITRATE (N) (MG/L)	TOTAL KJELDAHL NITROGEN (N) (MG/L)	TOTAL NITROGEN (N) (MG/L)	TOTAL NITROGEN (NO3) (MG/L)	TOTAL PHOSPHORUS (P) (MG/L)	DISSOLVED SOLIDS (RESIDUE AT 180 C) (MG/L)	DISSOLVED SOLIDS (SUM OF CONSTITUENTS) (MG/L)	DISSOLVED SOLIDS (TONS PER AC-FT)	HARDNESS (CA,MG) (MG/L)
OCT.											
08...	42	.5	2.0	8.9	11	48	1.2	448	335	.61	190
NOV.											
04...	150	.6	2.6	.92	3.5	16	1.2	869	870	1.18	410
DEC.											
03...	120	1.1	1.3	2.9	4.2	19	2.2	778	741	1.06	370
JAN.											
03...	200	.5	4.1	7.6	12	52	1.9	986	967	1.34	340
FEB.											
07...	110	.5	3.3	2.0	5.3	23	.87	759	718	1.03	380
MAR.											
04...	340	.6	1.6	2.5	4.1	18	.81	1160	1080	1.58	390
APR.											
24...	120	.6	3.3	1.5	4.8	21	.66	807	747	1.10	360
MAY											
19...	130	.7	.01	1.8	1.8	8.0	.54	821	756	1.12	390
JUNE											
17...	120	.4	.49	.72	1.2	5.4	.83	778	747	1.06	350
JULY											
16...	120	.7	.06	1.6	1.7	7.3	.81	803	777	1.09	370
AUG.											
18...	120	.6	.07	1.2	1.3	5.6	1.1	824	808	1.12	400
SEP.											
17...	93	.7	8.8	12	21	92	1.8	842	687	1.15	340

11103010 LOS ANGELES RIVER AT WILLOW STREET BRIDGE, AT LONG BEACH, CALIF.--Continued

WATER QUALITY DATA, WATER YEAR OCTOBER 1974 TO SEPTEMBER 1975

DATE	NON-CARBONATE HARDNESS (MG/L)	PERCENT SODIUM	SODIUM ADSORPTION RATIO	SPECIFIC CONDUCTANCE (MICROMHOS)	PH (UNITS)	TEMPERATURE (DEG C)	TURBIDITY (JTU)	TOTAL PHYTOPLANKTON (CELLS PER ML)	FECAL COLIFORM (COL. PER 100 ML)	STREPTOCOCCI (COLONIES PER 100 ML)	TOTAL ORGANIC CARBON (C) (MG/L)
OCT.											
08...	93	31	1.3	635	7.3	18.2	20	12000	>15000	>15000	2.5
NOV.											
04...	150	44	3.2	1180	8.8	16.5	1	14000	200	20	--
DEC.											
03...	140	39	2.5	1180	8.8	15.8	8	35000	7800	530	--
JAN.											
03...	150	55	4.7	1580	7.6	9.2	8	260	1350	720	9.8
FEB.											
07...	180	36	2.2	1130	8.3	13.2	3	970	3800	2770	--
MAR.											
04...	190	57	5.5	2700	8.6	14.4	7	15000	1200	1340	--
APR.											
24...	180	41	2.7	1210	9.1	16.5	5	15000	3200	862	21
MAY											
19...	170	37	2.4	1230	9.1	18.5	2	28000	200	220	--
JUNE											
17...	140	42	2.8	1170	8.9	18.2	7	71000	5200	550	--
JULY											
16...	140	41	2.7	1210	9.0	23.2	2	23000	830	190	--
AUG.											
18...	170	39	2.6	1240	9.2	22.3	3	20000	80	54	--
SEP.											
17...	150	36	2.3	1160	8.3	27.5	10	64000	8190000	8116000	--

BIOLOGICAL ANALYSES, WATER YEAR OCTOBER 1974 TO SEPTEMBER 1975

PHYTOPLANKTON

DATE	PHYLUM .CLASS ..ORDER ...FAMILY ....GENUS .....SPECIES	COMMON NAME	COUNT (CELLS/ML)	PERCENT OF TOTAL
NOV				
4	CHLOROPHYTA	GREEN ALGAE		
	.CHLOROPHYCEAE			
	..ULOTRICHALES			
	...CHAETOPHORACEAE			
	....STIGEOCLONIUM		12000	86
	..ZYGNEMATALES			
	...DESMIDIACEAE			
	....CLOSTERIUM			0
	CHRYSOPHYTA	YELLOW-GREEN ALGAE		
	.BACILLARIOPHYCEAE	DIATOMS		
	..PENNALES	PENNATE		
	...ACHNANTHACEAE			
	....ACHNANTHES		180	1
	...FRAGILARIACEAE			
	....SYNEDRA		1100	8
	...GOMPHONEMATACEAE			
	....GOMPHONEMA		120	1
	...NAVICULACEAE	NAVICULOID		
	....NAVICULA		470	3
	TOTAL PHYTOPLANKTON		14000	
DEC				
3	CHLOROPHYTA	GREEN ALGAE		
	.CHLOROPHYCEAE			
	..CHLOROCOCCALES			
	...OOCYSTACEAE			
	....KIRCHNERIELLA		650	2
	...SCENEDESMACEAE			
	....SCENEDESMUS		2200	6
	..ULOTRICHALES			
	...CHAETOPHORACEAE			
	....STIGEOCLONIUM		5600	16
	CHRYSOPHYTA	YELLOW-GREEN ALGAE		
	.BACILLARIOPHYCEAE	DIATOMS		
	..CENTRALES	CENTRIC		
	...COSCINODISCACEAE			
	....CYCLOTELLA		1100	3
	..PENNALES	PENNATE		
	...CYMBELLACEAE			
	....AMPHORA		1100	3
	...FRAGILARIACEAE			
	....SYNEDRA		220	1
	...GOMPHONEMATACEAE			
	....GOMPHONEMA		860	3
	...NITZSCHIACEAE			
	....NITZSCHIA		21000	60
	CYANOPHYTA	BLUE-GREEN ALGAE		
	.MYXOPHYCEAE			
	..CHROOCOCCALES			
	...CHROOCOCCACEAE			
	....ANACYSTIS		2200	6
	TOTAL PHYTOPLANKTON		35000	

11103010 LOS ANGELES RIVER AT WILLOW STREET BRIDGE, AT LONG BEACH, CALIF.--Continued

BIOLOGICAL ANALYSES, WATER YEAR OCTOBER 1974 TO SEPTEMBER 1975

PHYTOPLANKTON

DATE	PHYLUM .CLASS ..ORDER ...FAMILY ....GENUS .....SPECIES	COMMON NAME	COUNT (CELLS/ML)	PERCENT OF TOTAL
JAN				
3	CHLOROPHYTA	GREEN ALGAE		
	.CHLOROPHYCEAE			
	..VOLVOCALES			
	...CHLAMYDOMONADACEAE			
	....CHLAMYDOMONAS		22	8
	CHRYSOPHYTA	YELLOW-GREEN ALGAE		
	.BACILLARIOPHYCEAE	DIATOMS		
	..PENNALES	PENNATE		
	...GOMPHONEMATACEAE			
	....GOMPHONEMA		22	8
	...NITZSCHIACEAE			
	....HANTZSCHIA		170	67
	....NITZSCHIA		43	17
	TOTAL PHYTOPLANKTON		260	
FEB				
7	CHLOROPHYTA	GREEN ALGAE		
	.CHLOROPHYCEAE			
	..CHLOROCOCCALES			
	...MICRACTINIACEAE			
	....GOLENKINIA		7	1
	....MICRACTINIUM		49	5
	...OOCYSTACEAE			
	....ANKISTRODESMUS		7	1
	...SCENEDESMACEAE			
	....SCENEDESMUS		70	7
	..ULOTRICHALES			
	...ULOTRICHACEAE			
	....URONEMA		140	14
	..VOLVOCALES			
	...CHLAMYDOMONADACEAE			
	....CHLAMYDOMONAS		21	2
	CHRYSOPHYTA	YELLOW-GREEN ALGAE		
	.BACILLARIOPHYCEAE	DIATOMS		
	..CENTRALES	CENTRIC		
	...COSCINODISCACEAE			
	....CYCLOTELLA		14	1
	..PENNALES	PENNATE		
	...ACHNANTHACEAE			
	....ACHNANTHES		49	5
	...CYMBELLACEAE			
	....CYMBELLA		28	3
	...NITZSCHIACEAE			
	....NITZSCHIA		42	4
	.CHRYSOPHYCEAE			
	..CHRYSOMONADALES			
	...MALLOMONADACEAE			
	....MALLOMONAS		7	1
	...OCHROMONADACEAE			
	....UROGLENOPSIS		21	2
	CYANOPHYTA	BLUE-GREEN ALGAE		
	.MYXOPHYCEAE			
	..OSCILLATORIALES	FILAMENTOUS		
	...OSCILLATORIACEAE			
	....LYNGBYA		210	22
	....OSCILLATORIA		230	24
	....PHORMIDIUM		70	7
	TOTAL PHYTOPLANKTON		970	

11103010 LOS ANGELES RIVER AT WILLOW STREET BRIDGE, AT LONG BEACH, CALIF.--Continued

BIOLOGICAL ANALYSES, WATER YEAR OCTOBER 1974 TO SEPTEMBER 1975

PHYTOPLANKTON

DATE	PHYLUM .CLASS ..ORDER ...FAMILY ....GENUS .....SPECIES	COMMON NAME	COUNT (CELLS/ML)	PERCENT OF TOTAL
MAR 4	CHLOROPHYTA	GREEN ALGAE		
	.CHLOROPHYCEAE			
	..CHLOROCOCCALES			
	...OCCYSTACEAE			
	....ANKISTRODESMUS			0
	....SELENASTRUM			0
	...SCENEDESMACEAE			
	....SCENEDESMUS		300	2
	..CLADOPHORALES			
	...CLADOPHORACEAE			
	....CLADOPHORA		7400	48
	CHRYSOPHYTA	YELLOW-GREEN ALGAE		
	.BACILLARIOPHYCEAE	DIATOMS		
	..CENTRALES	CENTRIC		
	...COSCINODISCACEAE			
	....CYCLOTELLA			0
	....MELOSIRA		100	1
	..PENNALES	PENNATE		
	...CYMBELLACEAE			
	....CYMBELLA		710	5
	...GOMPHONEMATACEAE			
	....GOMPHONEMA		130	1
	...NAVICULACEAE	NAVICULOID		
	....NAVICULA		240	2
	...NITZSCHIACEAE			
	....NITZSCHIA		4000	26
	CYANOPHYTA	BLUE-GREEN ALGAE		
	.MYXOPHYCEAE			
	..OSCILLATORIALES	FILAMENTOUS		
	...OSCILLATORIACEAE			
	....LYNGBYA		1200	8
	....OSCILLATORIA		1200	8
	TOTAL PHYTOPLANKTON		15000	
APR 24	CHLOROPHYTA	GREEN ALGAE		
	.CHLOROPHYCEAE			
	..CHLOROCOCCALES			
	...OCCYSTACEAE			
	....ANKISTRODESMUS		89	1
	....SELENASTRUM		89	1
	...SCENEDESMACEAE			
	....SCENEDESMUS		1300	8
	..ULOTRICHALES			
	...CHAETOPHORACEAE			
	....STIGEOCLONIUM		3300	22
	..VOLVOCALES			
	...CHLAMYDOMONADACEAE			
	....CHLAMYDOMONAS		4600	30
	..ZYGNEMATALES			
	...DESMIDIACEAE			
	....STAURASTRUM		89	1
	CHRYSOPHYTA	YELLOW-GREEN ALGAE		
	.BACILLARIOPHYCEAE	DIATOMS		
	..PENNALES	PENNATE		
	...CYMBELLACEAE			
	....CYMBELLA		180	1
	...GOMPHONEMATACEAE			
	....GOMPHONEMA		89	1
	...NITZSCHIACEAE			
	....NITZSCHIA		5500	36
	.CHRYSOPHYCEAE			
	..CHRYSOMONADALES			
	...OCHROMONADACEAE			
	....OCHROMONAS		89	1
	TOTAL PHYTOPLANKTON		15000	

11103010 LOS ANGELES RIVER AT WILLOW STREET BRIDGE, AT LONG BEACH, CALIF.--Continued

BIOLOGICAL ANALYSES, WATER YEAR OCTOBER 1974 TO SEPTEMBER 1975

PHYTOPLANKTON

DATE	PHYLUM .CLASS ..ORDER ...FAMILY ....GENUS .....SPECIES	COMMON NAME	COUNT (CELLS/ML)	PERCENT OF TOTAL
MAY 19	CHLOROPHYTA	GREEN ALGAE		
	.CHLOROPHYCEAE			
	..CHLOROCOCCALES			
	...OCCYSTACEAE			
	....QUADRIGULA		1600	6
	....SELENASTRUM		790	3
	...SCENEDESMACEAE			
	....SCENEDESMUS		3200	11
	CHRYSOPHYTA	YELLOW-GREEN ALGAE		
	.BACILLARIOPHYCEAE	DIATOMS		
	..PENNALES	PENNATE		
	...CYMBELLACEAE			
	....EPITHEMIA		400	1
	...NAVICULACEAE	NAVICULOID		
	....NAVICULA		11000	40
	...NITZSCHIACEAE			
	....NITZSCHIA		11000	39
	TOTAL PHYTOPLANKTON		28000	
JUNE 17	CHLOROPHYTA	GREEN ALGAE		
	.CHLOROPHYCEAE			
	..CHLOROCOCCALES			
	...HYDRODICTYACEAE			
	....PEDIASTRUM		1000	1
	...OCCYSTACEAE			
	....ANKISTRODESMUS			0
	...SCENEDESMACEAE			
	....SCENEDESMUS		20000	28
	CHRYSOPHYTA	YELLOW-GREEN ALGAE		
	.BACILLARIOPHYCEAE	DIATOMS		
	..CENTRALES	CENTRIC		
	...COSCINODISCACEAE			
	....CYCLOTELLA		1200	2
	..PENNALES	PENNATE		
	...NITZSCHIACEAE			
	....NITZSCHIA		43000	61
	CYANOPHYTA	BLUE-GREEN ALGAE		
	.MYXOPHYCEAE			
	..OSCILLATORIALES	FILAMENTOUS		
	...OSCILLATORIACEAE			
	....LYNGBYA		5800	8
	TOTAL PHYTOPLANKTON		71000	
JULY 16	CHLOROPHYTA	GREEN ALGAE		
	.CHLOROPHYCEAE			
	..CHLOROCOCCALES			
	...CHARACIACEAE			
	....SCHROEDERIA		250	1
	...HYDRODICTYACEAE			
	....PEDIASTRUM		6100	26
	...OCCYSTACEAE			
	....ANKISTRODESMUS			0
	...SCENEDESMACEAE			
	....CRUCIGENIA			0
	....SCENEDESMUS		11000	45
	..TETRASPORALES			
	...COCCOMYXACEAE			
	....ELAKATOTHRIX		250	1
	..ULOTRICHALES			
	...CHAETOPHORACEAE			
	....STIGEOCLONIUM		2300	10
	..ZYGNEMATALES			
	...DESMIDIACEAE			
	....COSMARIUM			0
	CHRYSOPHYTA	YELLOW-GREEN ALGAE		
	.BACILLARIOPHYCEAE	DIATOMS		
	..CENTRALES	CENTRIC		
	...COSCINODISCACEAE			
	....CYCLOTELLA		1300	5
	....MELOSIRA		0	0

11103010 LOS ANGELES RIVER AT WILLOW STREET BRIDGE, AT LONG BEACH, CALIF.--Continued

BIOLOGICAL ANALYSES, WATER YEAR OCTOBER 1974 TO SEPTEMBER 1975

PHYTOPLANKTON

DATE	PHYLUM .CLASS ..ORDER ...FAMILY ....GENUS .....SPECIES	COMMON NAME	COUNT (CELLS/ML)	PERCENT OF TOTAL
JULY 16 (Continued)	CHRYSOPHYTA	YELLOW-GREEN ALGAE		
	.BACILLARIOPHYCEAE	DIATOMS		
	..PENNALES	PENNATE		
	...ACHNANTHACEAE			
	....ACHNANTHES		250	1
	...GOMPHONEMATACEAE			
	....GOMPHONEMA		380	2
	...NAVICULACEAE	NAVICULOID		
	....NAVICULA		760	3
	...NITZSCHIACEAE			
	....NITZSCHIA			0
	CYANOPHYTA	BLUE-GREEN ALGAE		
	.MYXOPHYCEAE			
	..OSCILLATORIALES	FILAMENTOUS		
	...NOSTOCACEAE			
	....ANABAENA		1500	6
	...OSCILLATORIACEAE			
	....OSCILLATORIA			0
	TOTAL PHYTOPLANKTON		24000	
AUG 18	CHLOROPHYTA	GREEN ALGAE		
	.CHLOROPHYCEAE			
	..CHLOROCOCCALES			
	...COELASTRACEAE			
	....COELASTRUM			0
	...HYDRODICTYACEAE			
	....PEDIASTRUM		1700	8
	...OOCYSTACEAE			
	....ANKISTRODESMUS		550	3
	....SELENASTRUM		140	1
	...SCENEDESMACEAE			
	....SCENEDESMUS		6500	32
	..OEDOGONIALES			
	...OEDOGONIACEAE			
	....OEDOGONIUM			0
	..ULOTRICHALES			
	...CHAETOPHORACEAE			
	....STIGEOCLONIUM			0
	..VOLVOCALES			
	...CHLAMYDOMONADACEAE			
	....CHLAMYDOMONAS		140	1
	..ZYGNEMATALES			
	...DESMIDIACEAE			
	....COSMARIUM			0
	CHRYSOPHYTA	YELLOW-GREEN ALGAE		
	.BACILLARIOPHYCEAE	DIATOMS		
	..CENTRALES	CENTRIC		
	...COSCINODISCACEAE			
	....CYCLOTELLA		1100	5
	....MELOSIRA		280	1
	..PENNALES	PENNATE		
	...NAVICULACEAE	NAVICULOID		
	....DIPLONEIS		140	1
	....NAVICULA		1200	6
	...NITZSCHIACEAE			
	....NITZSCHIA		140	1
	CYANOPHYTA	BLUE-GREEN ALGAE		
	.MYXOPHYCEAE			
	..OSCILLATORIALES	FILAMENTOUS		
	...OSCILLATORIACEAE			
	....LYNGBYA			0
	....OSCILLATORIA		8400	41
	TOTAL PHYTOPLANKTON		20000	

11103010 LOS ANGELES RIVER AT WILLOW STREET BRIDGE, AT LONG BEACH, CALIF.--Continued

BIOLOGICAL ANALYSES, WATER YEAR OCTOBER 1974 TO SEPTEMBER 1975

PHYTOPLANKTON

DATE	PHYLUM .CLASS ..ORDER ...FAMILY ....GENUS .....SPECIES	COMMON NAME	COUNT (CELLS/ML)	PERCENT OF TOTAL
SEP 17	CHLOROPHYTA	GREEN ALGAE		
	.CHLOROPHYCEAE			
	..CHLOROCOCCALES			
	...HYDRODICTYACEAE			
	....PEDIASTRUM		3400	5
	...OCCYSTACEAE			
	....ANKISTRODESMUS		430	1
	....KIRCHNERIELLA		1900	3
	....TETRAEDRON			0
	...SCENEDESMACEAE			
	....SCENEDESMUS		19000	30
	..ULOTRICHALES			
	...CHAETOPHORACEAE			
	....STIGEOCLONIUM			0
	CHRYSOPHYTA	YELLOW-GREEN ALGAE		
	.BACILLARIOPHYCEAE	DIATOMS		
	..CENTRALES	CENTRIC		
	...COSCINODISCACEAE			
	....CYCLOTELLA		1500	2
	....MELOSIRA			0
	..PENNALES	PENNATE		
	...FRAGILARIACEAE			
	....FRAGILARIA			0
	....SYNEDRA			0
	...GOMPHONEMATACEAE			
	....GOMPHONEMA		640	1
	...NAVICULACEAE	NAVICULOID		
	....NAVICULA		4100	6
	...NITZSCHIACEAE			
	....NITZSCHIA		3900	6
	CYANOPHYTA	BLUE-GREEN ALGAE		
	.MYXOPHYCEAE			
	..OSCILLATORIALES	FILAMENTOUS		
	...NOSTOCACEAE			
	....APHANIZOMENON		29000	45
	EUGLENOPHYTA			
	.EUGLENOPHYCEAE			
	..EUGLENALES			
	...EUGLENACEAE			
	....EUGLENA			0
	TOTAL PHYTOPLANKTON		64000	

11103010 LOS ANGELES RIVER AT WILLOW STREET BRIDGE, AT LONG BEACH, CALIF.--Continued

WATER QUALITY DATA, WATER YEAR OCTOBER 1974 TO SEPTEMBER 1975

DATE	TIME	TOTAL IRON (FE) (UG/L)	DIS-SOLVED IRON (FE) (UG/L)	TOTAL MAN-GANESE (MN) (UG/L)	SUS-PENDED MAN-GANESE (MN) (UG/L)	DIS-SOLVED MAN-GANESE (MN) (UG/L)	TOTAL ARSENIC (AS) (UG/L)	SUS-PENDED ARSENIC (AS) (UG/L)	DIS-SOLVED ARSENIC (AS) (UG/L)	TOTAL CAD-MIUM (CD) (UG/L)	SUS-PENDED CAD-MIUM (CD) (UG/L)
OCT. 08...	1030	2300	390	320	40	280	26	10	16	<10	--
JAN. 03...	1115	680	30	120	0	120	2	0	5	30	28
APR. 24...	1150	290	50	30	0	30	6	0	6	<10	<8
JULY 16...	1140	180	50	40	40	0	8	3	5	<10	<9

DATE	DIS-SOLVED CAD-MIUM (CD) (UG/L)	TOTAL CHRO-MIUM (CR) (UG/L)	SUS-PENDED CHRO-MIUM (CR) (UG/L)	DIS-SOLVED CHRO-MIUM (CR) (UG/L)	TOTAL COBALT (CO) (UG/L)	SUS-PENDED COBALT (CO) (UG/L)	DIS-SOLVED COBALT (CO) (UG/L)	TOTAL COPPER (CU) (UG/L)	SUS-PENDED COPPER (CU) (UG/L)	DIS-SOLVED COPPER (CU) (UG/L)	TOTAL LEAD (PB) (UG/L)
OCT. 08...	--	0	0	0	<50	<49	1	30	0	35	200
JAN. 03...	2	20	10	10	<50	<50	0	30	17	13	<100
APR. 24...	2	50	10	40	<50	<50	0	20	4	16	<100
JULY 16...	1	30	10	20	<50	<50	0	50	45	5	<100

DATE	SUS-PENDED LEAD (PB) (UG/L)	DIS-SOLVED LEAD (PB) (UG/L)	TOTAL MERCURY (HG) (UG/L)	SUS-PENDED MERCURY (HG) (UG/L)	DIS-SOLVED MERCURY (HG) (UG/L)	TOTAL SELE-NIUM (SE) (UG/L)	SUS-PENDED SELE-NIUM (SE) (UG/L)	DIS-SOLVED SELE-NIUM (SE) (UG/L)	TOTAL ZINC (ZN) (UG/L)	SUS-PENDED ZINC (ZN) (UG/L)	DIS-SOLVED ZINC (ZN) (UG/L)
OCT. 08...	150	48	.2	.0	.4	1	0	2	240	90	150
JAN. 03...	<95	5	.0	.0	.1	2	0	2	100	20	80
APR. 24...	<94	6	.1	.0	.1	3	0	3	120	90	30
JULY 16...	<89	11	.1	.0	.1	2	0	2	50	20	30

SPECIFIC CONDUCTANCE (MICROMHOS/CM AT 25 DEG. C), WATER YEAR OCTOBER 1974 TO SEPTEMBER 1975

	OCTOBER			NOVEMBER			DECEMBER			JANUARY		
DAY	MAX	MIN	MEAN	MAX	MIN	MEAN	MAX	MIN	MEAN	MAX	MIN	MEAN
1	1700	1460	1540							---	---	---
2	1670	1350	1520							---	---	---
3	1590	1380	1470							1860	1210	1540
4	1430	1180	1330							1470	1090	1300
5	1520	1230	1390							1680	1110	1200
6	1490	1200	1320							1250	1140	1180
7	1420	993	1270							1370	1080	1180
8	963	635	820							1210	1090	1150
9	972	520	869							1230	1050	1130
10	---	---	---							1310	1060	1140
11	---	---	---							1250	1040	1130
12	---	---	---							1390	1040	1100
13	---	---	---							1170	1050	1100
14	---	---	---							1270	1050	1160
15	---	---	---							1320	1070	1200
16	---	---	---							1320	1030	1210
17	---	---	---							1230	1080	1180
18	---	---	---							1370	1150	1240
19	---	---	---							1280	1080	1160
20	---	---	---							1250	1060	1160
21	---	---	---							1440	1140	1300
22	---	---	---							1380	1170	1290
23	---	---	---							1380	1190	1270
24	---	---	---							1490	1260	1380
25	---	---	---							1630	1230	1450
26	---	---	---							1690	1260	1410
27	---	---	---							1720	1430	1510
28	---	---	---							1690	734	1310
29	---	---	---							1250	905	1100
30	---	---	---							---	---	---
31	---	---	---							---	---	---
MONTH	---	---	---							1860	734	1240

11103010 LOS ANGELES RIVER AT WILLOW STREET BRIDGE, AT LONG BEACH, CALIF.--Continued

SPECIFIC CONDUCTANCE (MICROMHOS/CM AT 25 DEG. C), WATER YEAR OCTOBER 1974 TO SEPTEMBER 1975

	FEBRUARY			MARCH			APRIL			MAY		
DAY	MAX	MIN	MEAN	MAX	MIN	MEAN	MAX	MIN	MEAN	MAX	MIN	MEAN
1	---	---	---	1170	1050	1100	---	---	---	1230	1060	1120
2	---	---	---	1130	997	1060	---	---	---	1380	1120	1210
3	---	---	---	1150	1000	1070	---	---	---	1230	1120	1190
4	---	---	---	---	---	---	---	---	---	---	---	---
5	---	---	---	1190	286	870	---	---	---	---	---	---
6	---	---	---	440	117	220	---	---	---	---	---	---
7	1130	993	1080	531	301	387	---	---	---	---	---	---
8	1360	1050	1190	448	148	244	---	---	---	---	---	---
9	1180	222	354	821	249	538	---	---	---	---	---	---
10	456	167	294	947	226	594	---	---	---	---	---	---
11	852	282	558	427	217	312	---	---	---	---	---	---
12	1140	847	997	976	465	730	---	---	---	---	---	---
13	1320	926	1110	1040	648	916	---	---	---	---	---	---
14	1270	1050	1150	698	300	445	---	---	---	---	---	---
15	1330	1090	1210	934	509	747	---	---	---	---	---	---
16	1440	1090	1180	1070	643	922	---	---	---	---	---	---
17	1280	1110	1190	1030	639	859	---	---	---	---	---	---
18	1380	1070	1180	1060	955	1020	---	---	---	---	---	---
19	1310	1050	1170	1190	1030	1120	---	---	---	1220	1060	1130
20	1280	1060	1200	1220	1110	1160	---	---	---	1250	939	1160
21	1270	1080	1190	1240	1140	1190	---	---	---	1080	641	846
22	1230	942	1100	1230	197	523	---	---	---	1440	1080	1260
23	1170	920	1060	523	249	393	---	---	---	1450	1350	1400
24	1250	1050	1140	705	527	634	1240	1120	1160	1390	1340	1360
25	1240	1030	1110	774	549	672	1170	839	1020	1440	1230	1370
26	1260	1070	1130	---	---	---	1210	1010	1120	1240	1160	1200
27	1190	1000	1090	---	---	---	1220	1080	1170	1270	1150	1210
28	1160	1040	1100	---	---	---	1260	1060	1150	1260	1150	1200
29	---	---	---	---	---	---	1210	1080	1160	1280	1140	1220
30	---	---	---	---	---	---	1200	1090	1150	1280	1160	1190
31	---	---	---	---	---	---	---	---	---	1340	1170	1260
MONTH	1440	167	1040	---	---	---	---	---	---	---	---	---

	JUNE			JULY			AUGUST			SEPTEMBER		
DAY	MAX	MIN	MEAN	MAX	MIN	MEAN	MAX	MIN	MEAN	MAX	MIN	MEAN
1	1400	1210	1310	1520	1280	1380	1600	1300	1420	1600	1380	1450
2	1330	1140	1250	1400	1080	1260	---	---	---	1470	1380	1430
3	1250	1150	1220	1320	1030	1180	1640	1450	1550	1530	1430	1480
4	1240	1200	1220	1430	1170	1270	1720	1340	1580	1520	1420	1480
5	1290	1180	1240	1360	907	1030	1340	1280	1300	1510	1250	1380
6	1290	1140	1220	1190	910	1110	1550	1360	1440	1260	1020	1180
7	1340	1280	1310	1370	1070	1190	1460	1230	1360	1040	911	974
8	1350	1270	1310	1340	1110	1200	1280	1200	1250	939	908	922
9	---	---	---	1280	1120	1210	1300	1200	1260	1050	937	987
10	---	---	---	1330	1130	1230	1260	1200	1220	1160	1030	1080
11	---	---	---	1300	1140	1200	1280	1200	1240	1200	1050	1180
12	---	---	---	1310	1140	1210	1340	1240	1290	1180	1090	1120
13	---	---	---	1290	1080	1160	1430	1150	1250	1320	1100	1180
14	---	---	---	1150	1000	1070	1570	1440	1520	1320	1160	1250
15	---	---	---	1320	1050	1120	1480	1260	1320	1210	1130	1160
16	---	---	---	1300	1100	1180	1360	1240	1300	1320	1040	1180
17	1180	964	1050	1390	1070	1300	1390	1270	1360	1270	1160	1210
18	1140	825	893	1460	1320	1380	1360	1070	1180	---	---	---
19	1150	820	985	1320	1220	1280	1360	1100	1240	---	---	---
20	1170	813	1010	1600	1120	1320	1340	1000	1160	---	---	---
21	1240	853	1040	1600	1180	1360	1420	1150	1230	---	---	---
22	1410	1080	1210	1890	1500	1790	1300	1080	1180	---	---	---
23	1790	1430	1630	1790	1320	1620	1500	1220	1340	---	---	---
24	1800	1720	1750	1680	1240	1520	1280	1090	1210	---	---	---
25	1960	1780	1840	1780	1260	1640	1680	1140	1400	---	---	---
26	1990	1840	1930	1560	1350	1500	1860	1160	1440	---	---	---
27	1990	1810	1900	1360	1130	1280	1460	1240	1370	---	---	---
28	1900	1560	1760	1310	1100	1260	1450	1180	1280	---	---	---
29	---	---	---	1520	1200	1380	1400	1120	1280	---	---	---
30	2010	1340	1620	1520	1400	1460	1510	1250	1370	---	---	---
31	---	---	---	1460	1360	1420	1540	1340	1420	---	---	---
MONTH	---	---	---	1890	907	1310	1860	1000	1330	---	---	---

11103010 LOS ANGELES RIVER AT WILLOW STREET BRIDGE, AT LONG BEACH, CALIF.--Continued

TEMPERATURE (DEG. C) OF WATER, WATER YEAR OCTOBER 1974 TO SEPTEMBER 1975

	OCTOBER			NOVEMBER			DECEMBER			JANUARY		
DAY	MAX	MIN	MEAN	MAX	MIN	MEAN	MAX	MIN	MEAN	MAX	MIN	MEAN
1	27.0	18.5	21.5	20.5	12.0	15.0	---	---	---	---	---	---
2	27.5	18.5	21.5	19.0	11.0	14.5	---	---	---	---	---	---
3	23.5	18.0	20.0	19.0	10.0	14.0	16.5	13.0	16.0	13.0	8.0	11.0
4	21.0	18.0	19.0	16.5	10.0	12.0	13.5	11.5	12.5	14.0	4.5	9.0
5	23.5	17.0	19.5	---	---	---	17.5	10.5	13.0	15.5	5.0	10.0
6	26.5	17.5	21.0	---	---	---	16.5	9.5	13.0	14.5	7.0	11.0
7	22.0	18.5	19.5	---	---	---	17.0	9.0	13.0	16.5	10.5	13.0
8	23.0	18.0	19.5	---	---	---	18.5	10.5	13.5	13.5	9.5	11.5
9	24.5	16.5	19.5	---	---	---	17.5	8.5	12.5	13.0	7.0	9.5
10	24.0	14.5	19.0	---	---	---	17.0	8.0	12.0	14.5	5.5	9.5
11	23.0	16.0	19.0	---	---	---	16.5	8.5	12.5	15.5	7.0	11.0
12	26.5	16.5	20.5	---	---	---	20.0	9.5	13.5	16.5	7.0	11.0
13	27.0	18.0	21.0	---	---	---	19.5	10.5	14.0	18.5	7.5	12.5
14	27.0	18.0	21.0	---	---	---	23.0	9.0	15.0	18.5	8.5	13.0
15	29.0	18.5	22.0	---	---	---	19.5	8.5	14.0	18.0	8.0	12.5
16	27.5	15.0	20.5	---	---	---	22.5	9.0	15.5	14.0	8.0	11.0
17	25.5	15.0	20.0	---	---	---	18.5	10.5	14.5	18.0	8.5	12.5
18	23.5	17.0	19.5	---	---	---	18.5	10.0	13.5	18.0	8.0	12.5
19	23.5	16.0	19.0	---	---	---	16.5	9.5	13.0	18.5	7.5	13.0
20	22.0	16.0	18.0	---	---	---	16.5	9.0	13.0	17.5	9.0	12.5
21	19.5	15.5	17.0	---	---	---	16.5	10.5	13.0	14.5	9.0	11.5
22	22.5	14.5	17.5	---	---	---	18.0	6.0	12.5	15.0	7.5	11.0
23	17.5	15.5	16.5	---	---	---	---	---	---	14.0	7.0	10.5
24	23.0	14.0	18.0	---	---	---	---	---	---	13.5	6.5	10.0
25	23.0	14.0	18.0	---	---	---	---	---	---	14.0	7.5	10.5
26	19.5	15.0	16.5	---	---	---	---	---	---	13.0	9.0	11.0
27	21.0	14.5	17.0	---	---	---	---	---	---	11.0	7.0	10.0
28	18.5	12.5	15.5	---	---	---	---	---	---	11.5	2.5	6.5
29	22.0	12.0	15.5	---	---	---	---	---	---	12.0	2.5	6.5
30	20.0	11.5	15.0	---	---	---	---	---	---	7.0	3.5	5.0
31	16.0	11.0	13.5	---	---	---	---	---	---	10.5	2.0	6.5
MONTH	29.0	11.0	18.5	---	---	---	---	---	---	18.5	2.0	10.5

	FEBRUARY			MARCH			APRIL			MAY		
DAY	MAX	MIN	MEAN	MAX	MIN	MEAN	MAX	MIN	MEAN	MAX	MIN	MEAN
1	12.0	3.0	7.0	19.5	13.0	15.5	21.0	11.5	16.0	25.0	17.0	21.0
2	12.0	4.0	8.0	20.5	13.0	16.5	23.0	12.0	17.0	25.5	16.5	21.0
3	10.0	6.5	8.0	20.0	12.5	16.5	22.5	13.0	17.5	24.5	17.5	20.5
4	11.5	7.0	8.5	18.5	14.5	15.5	20.0	13.0	16.0	23.5	17.5	20.0
5	14.5	8.5	11.0	17.0	12.5	14.5	17.5	13.0	14.5	23.0	14.5	18.5
6	18.0	8.5	12.5	17.0	11.5	14.0	14.0	10.0	12.5	23.0	16.0	19.5
7	17.5	9.5	12.0	21.0	13.5	16.0	21.0	7.5	13.0	24.5	16.5	20.0
8	15.5	11.0	12.5	15.5	13.5	14.5	14.0	10.0	11.5	25.0	16.5	20.5
9	12.0	10.5	11.5	21.0	12.5	15.5	20.5	10.0	14.5	27.5	18.0	22.0
10	14.5	10.5	12.0	15.5	12.0	13.0	23.0	11.5	16.5	28.0	16.0	22.0
11	18.5	9.0	13.5	16.0	10.5	13.0	24.0	13.0	17.5	28.5	18.5	23.0
12	18.5	10.0	13.5	20.5	10.0	14.5	26.5	13.5	18.5	27.5	19.5	23.0
13	16.5	10.5	13.5	22.5	12.5	15.5	23.5	15.0	18.0	25.0	19.5	22.0
14	19.0	11.0	14.5	22.0	11.0	15.0	24.5	15.0	18.0	25.5	19.0	22.0
15	18.0	6.5	11.5	22.0	10.5	15.5	17.0	14.0	15.0	21.5	18.5	20.0
16	14.5	7.5	10.5	20.0	11.0	14.5	21.0	12.0	15.5	21.0	18.0	19.0
17	15.0	4.5	10.0	21.0	8.5	14.0	20.5	12.0	15.5	27.0	17.0	21.0
18	16.0	6.5	11.0	23.5	11.0	16.5	24.0	11.0	17.0	28.0	19.5	23.0
19	15.0	6.5	11.0	26.0	12.5	18.5	25.5	13.0	18.5	21.0	18.5	19.5
20	16.0	9.5	12.5	20.5	14.5	17.0	26.5	14.5	20.0	21.5	15.5	18.0
21	18.0	8.5	12.0	19.0	14.0	15.5	21.0	16.5	18.5	25.0	14.0	19.5
22	15.5	6.0	10.5	19.0	12.5	14.5	20.0	15.5	16.5	27.0	15.0	20.5
23	19.0	7.0	12.5	24.0	10.0	16.0	23.5	13.0	17.5	29.5	15.5	21.5
24	20.0	9.0	14.0	24.0	12.5	18.0	21.0	14.5	17.0	30.0	17.0	22.5
25	19.0	11.0	14.5	22.0	14.5	17.5	26.0	14.5	18.5	29.5	19.0	23.0
26	19.5	12.0	15.0	19.5	9.5	14.0	23.0	12.0	16.5	30.0	18.5	23.5
27	18.5	11.5	15.0	20.5	9.0	14.0	24.5	14.0	18.5	22.0	19.0	20.5
28	19.5	12.5	15.5	21.0	9.5	14.5	25.5	14.0	19.5	30.0	17.5	23.0
29	---	---	---	20.5	10.0	15.0	27.0	16.0	21.0	30.5	19.5	24.5
30	---	---	---	22.5	11.0	16.5	25.0	17.0	21.0	31.0	20.0	24.5
31	---	---	---	15.5	12.5	14.0	---	---	---	28.0	20.0	22.5
MONTH	20.0	3.0	12.0	26.0	8.5	15.5	27.0	7.5	17.0	31.0	14.0	21.5

11103010 LOS ANGELES RIVER AT WILLOW STREET BRIDGE, AT LONG BEACH, CALIF.--Continued

TEMPERATURE (DEG. C) OF WATER, WATER YEAR OCTOBER 1974 TO SEPTEMBER 1975

	JUNE			JULY			AUGUST			SEPTEMBER		
DAY	MAX	MIN	MEAN	MAX	MIN	MEAN	MAX	MIN	MEAN	MAX	MIN	MEAN
1	28.5	19.0	22.5	31.5	19.5	25.0	32.5	21.5	26.5	33.0	22.5	26.5
2	28.5	19.0	22.5	32.0	20.0	25.5	---	---	---	33.5	21.0	26.5
3	23.5	18.5	20.0	31.0	20.5	25.0	---	---	---	33.0	21.5	27.0
4	24.5	17.5	20.0	31.0	20.5	25.0	32.0	22.0	26.5	33.5	23.0	28.0
5	27.5	18.0	21.5	33.0	20.0	25.5	33.5	22.0	27.0	33.5	23.5	27.5
6	28.5	18.5	22.0	32.5	21.5	26.5	34.0	22.5	27.5	33.5	23.5	27.5
7	26.5	18.5	21.5	32.5	21.5	26.0	34.5	22.5	28.0	33.5	24.0	28.0
8	25.5	18.0	21.0	27.0	22.0	24.5	32.5	23.5	27.0	29.5	23.0	25.0
9	28.5	18.5	22.5	32.5	21.5	26.5	30.0	22.0	25.5	25.0	22.0	23.0
10	29.0	18.5	23.0	33.0	23.5	28.0	31.0	23.0	26.0	28.5	22.0	24.5
11	29.5	19.0	23.5	33.5	24.0	28.0	31.5	21.5	25.5	27.0	22.0	23.5
12	27.0	19.5	22.5	30.0	23.5	26.0	31.0	21.0	25.5	26.5	21.0	23.5
13	27.5	19.0	22.5	29.0	21.0	24.5	32.0	21.5	25.5	28.0	22.5	24.5
14	26.5	19.0	21.5	30.5	21.0	24.5	31.5	21.0	25.0	30.5	22.5	25.5
15	26.0	18.5	21.0	31.0	21.5	25.5	30.5	20.5	24.5	33.5	23.5	27.5
16	23.5	18.5	20.0	32.0	22.0	25.0	31.5	20.0	25.0	33.0	23.5	27.5
17	24.5	17.5	19.0	31.0	22.0	25.5	30.5	20.5	24.5	27.5	24.5	25.5
18	27.5	16.5	21.0	30.0	22.0	25.0	31.5	20.5	24.5	---	---	---
19	22.5	16.0	18.5	33.0	23.0	27.0	30.0	20.5	24.5	---	---	---
20	26.0	15.5	20.5	33.0	24.0	27.5	31.0	19.5	24.5	---	---	---
21	29.5	17.0	23.0	33.0	24.0	27.5	28.0	20.0	22.5	---	---	---
22	29.5	19.0	23.5	32.0	23.0	26.5	32.0	20.0	25.0	---	---	---
23	28.5	19.0	23.0	32.5	24.0	27.0	33.5	20.5	26.0	---	---	---
24	27.0	18.5	22.0	32.5	22.5	27.0	33.5	21.0	26.0	---	---	---
25	30.0	17.0	23.0	32.5	23.0	27.0	33.5	20.5	25.5	---	---	---
26	31.0	19.0	25.0	31.5	23.0	26.0	33.0	21.5	26.0	---	---	---
27	30.5	19.5	24.5	32.5	22.5	27.0	33.5	20.0	25.5	---	---	---
28	29.5	19.5	24.5	33.0	23.5	27.0	33.0	20.5	26.5	---	---	---
29	30.5	20.0	24.5	33.0	23.0	27.0	33.0	21.5	27.0	---	---	---
30	31.5	19.5	25.0	33.0	22.5	27.0	33.5	21.5	27.0	---	---	---
31	---	---	---	33.0	21.5	26.5	32.5	22.5	27.0	---	---	---
MONTH	31.5	15.5	22.0	33.5	19.5	26.0	34.5	19.5	26.0	---	---	---

PARTICLE-SIZE DISTRIBUTION OF SUSPENDED SEDIMENT, WATER YEAR OCTOBER 1974 TO SEPTEMBER 1975

DATE	TIME	INSTANTANEOUS DISCHARGE (CFS)	TEMPERATURE (DEG C)	SUSPENDED SEDIMENT (MG/L)	SUSPENDED SEDIMENT DISCHARGE (T/DAY)	SUS. SED. SIEVE DIAM. % FINER THAN .062 MM
NOV.						
04...	1120	19	16.5	6	.31	--
DEC.						
03...	1200	32	15.8	27	2.3	95
JAN.						
03...	1115	21	9.2	15	.85	93
FEB.						
07...	1100	21	13.2	8	.45	91
MAR.						
04...	1040	45	14.4	12	1.5	92
APR.						
24...	1150	27	16.5	5	.36	81
MAY						
19...	1115	23	18.5	22	1.4	74
JUNE						
17...	1145	29	18.2	29	2.3	63
JULY						
16...	1140	31	23.2	13	1.1	53
AUG.						
18...	1115	28	22.3	11	.83	38
SEP.						
17...	1110	63	27.5	67	11	44

11103500 BALLONA CREEK NEAR CULVER CITY, CALIF.

LOCATION.--Lat 33°59'54", long 118°24'05", in La Ballona Grant, Los Angeles County, 500 ft (152 m) upstream from Sawtelle Boulevard bridge, 1.7 mi (2.7 km) south of Culver City, and 4.1 mi (6.6 km) upstream from mouth.

DRAINAGE AREA.--89.5 mi^2 (231.8 km^2), excludes that of Sepulveda Creek. Prior to January 1951, 111 mi^2 (287 km^2), change due to tributary channel realignment.

PERIOD OF RECORD.--February 1928 to current year (after December 1950, flow of Sepulveda Creek excluded).

GAGE.--Water-stage recorder. Datum of gage is 11.98 ft (3.652 m) above mean sea level (levels by Los Angeles County Flood Control District). Prior to May 14, 1936, at site 1 mi (2 km) downstream at different datum. May 14, 1936, to Oct. 3, 1961, at datum 0.72 ft (0.219 m) lower and Oct. 24, 1961, to Aug. 10, 1967, at datum 0.92 ft (0.280 m) lower at site 500 ft (152 m) downstream.

AVERAGE DISCHARGE.--22 years (1928-50), 35.2 ft^3/s (0.997 m^3/s), 25,480 acre-ft/yr (31.4 hm^3/yr); 25 years (1950-75), 44.8 ft^3/s (1.269 m^3/s), 32,460 acre-ft/yr (40.0 hm^3/yr).

EXTREMES.--Current year: Maximum discharge, 20,560 ft^3/s (582 m^3/s) Dec. 4 (gage height, 12.35 ft or 3.764 m); minimum daily, 6.2 ft^3/s (0.18 m^3/s) Feb. 1.
Period of record: Maximum discharge, 32,500 ft^3/s (920 m^3/s) Nov. 21, 1967 (gage height, 14.89 ft or 4.538 m); no flow at times in some years.

REMARKS.--Records poor. No regulation above station. At times city of Los Angeles discharges imported Owens River water from several distribution reservoirs into the creek above station. Some small pumping diversions above station for irrigation.

COOPERATION.--Records furnished by Los Angeles County Flood Control District.

DISCHARGE, IN CUBIC FEET PER SECOND, WATER YEAR OCTOBER 1974 TO SEPTEMBER 1975
MEAN VALUES

DAY	OCT	NOV	DEC	JAN	FEB	MAR	APR	MAY	JUN	JUL	AUG	SEP
1	11	43	11	11	6.2	8.8	13	13	10	12	41	12
2	10	43	12	11	772	8.2	14	13	11	12	38	16
3	11	48	335	9.4	1350	8.8	14	13	11	12	14	14
4	11	52	2490	9.4	201	8.8	14	11	9.4	10	15	12
5	10	58	20	10	16	316	442	13	11	11	13	14
6	10	48	17	10	12	673	197	13	11	11	13	13
7	131	18	15	10	12	220	65	13	10	12	13	12
8	13	14	14	9.4	16	931	123	12	9.4	14	12	14
9	12	13	14	8.8	891	16	177	12	11	18	12	11
10	12	12	12	9.4	315	252	10	12	11	20	12	12
11	12	12	12	8.8	11	65	9.4	12	12	34	13	12
12	12	13	12	8.8	10	16	8.8	18	12	34	12	12
13	11	12	14	9.4	9.4	233	7.6	14	11	36	12	12
14	12	14	11	9.4	8.8	55	8.8	12	10	41	12	12
15	12	16	11	9.4	8.2	13	111	13	11	41	12	13
16	12	14	11	11	8.2	47	12	14	11	43	11	17
17	15	13	11	11	8.8	12	12	12	12	48	11	14
18	25	16	12	11	8.8	12	13	11	11	41	12	13
19	32	17	11	10	8.8	11	12	11	11	38	12	12
20	21	19	11	11	10	11	11	20	11	41	14	11
21	12	16	11	12	11	11	14	11	11	41	15	11
22	11	16	9.4	14	10	704	12	11	11	36	13	12
23	11	14	11	14	10	12	12	11	12	34	11	13
24	12	11	11	13	9.4	12	12	10	11	45	12	13
25	13	11	9.4	13	9.4	21	16	10	12	41	15	14
26	12	12	9.4	11	10	11	16	11	12	36	16	14
27	12	12	8.8	11	11	15	12	12	16	36	14	13
28	308	11	932	12	11	15	15	12	12	41	13	13
29	12	12	73	11	---	14	16	13	14	38	13	14
30	11	12	20	24	---	11	14	12	12	41	14	13
31	19	---	17	8.2	---	17	---	11	---	41	12	---
TOTAL	828	622	4168.0	341.4	3765.0	3760.6	1413.6	386	339.8	959	452	388
MEAN	26.7	20.7	134	11.0	134	121	47.1	12.5	11.3	30.9	14.6	12.9
MAX	308	58	2490	24	1350	931	442	20	16	48	41	17
MIN	10	11	8.8	8.2	6.2	8.2	7.6	10	9.4	10	11	11
AC-FT	1640	1230	8270	677	7470	7460	2800	766	674	1900	897	770

CAL YR 1974 TOTAL 22917.2 MEAN 62.8 MAX 3510 MIN 8.8 AC-FT 45460
WTR YR 1975 TOTAL 17423.4 MEAN 47.7 MAX 2490 MIN 6.2 AC-FT 34560

11104000 TOPANGA CREEK NEAR TOPANGA BEACH, CALIF.

LOCATION.--Lat 34°03'52", long 118°35'10", in Boca de Santa Monica Grant, Los Angeles County, on downstream side of right abutment of highway bridge, 1.7 mi (2.7 km) north of Topanga Beach.

DRAINAGE AREA.--18.0 mi^2 (46.6 km^2).

PERIOD OF RECORD.--January 1930 to September 1938, October 1939 to current year.

GAGE.--Water-stage recorder. Datum of gage is 265.60 ft (80.955 m) above mean sea level (levels by Los Angeles County Flood Control District). Prior to June 5, 1940, at different datum. June 5, 1940, to Dec. 9, 1941, at site 400 ft (122 m) upstream at different datum.

AVERAGE DISCHARGE.--44 years, 5.63 ft^3/s (0.159 m^3/s), 4,080 acre-ft/yr (5.03 hm^3/yr).

EXTREMES.--Current year: Maximum discharge, 1,670 ft^3/s (47.3 m^3/s), estimated, Mar. 6 (gage height, unknown); minimum daily, 0.10 ft^3/s (0.003 m^3/s) many days.
Period of record: Maximum discharge, 12,200 ft^3/s (346 m^3/s) Jan. 25, 1969 (gage height, 13.36 ft or 4.072 m), from rating curve extended above 610 ft^3/s (17.3 m^3/s) on basis of slope-area measurement of maximum flow; no flow at times in some years.

REMARKS.--Records poor. No regulation or diversion above station.

COOPERATION.--Records furnished by Los Angeles County Flood Control District.

DISCHARGE, IN CUBIC FEET PER SECOND, WATER YEAR OCTOBER 1974 TO SEPTEMBER 1975
MEAN VALUES

DAY	OCT	NOV	DEC	JAN	FEB	MAR	APR	MAY	JUN	JUL	AUG	SEP
1	.20	.20	.10	.40	.40	.80	2.0	.90	.70	.40	.20	.20
2	.20	.20	.10	.40	4.9	.80	1.9	1.0	.80	.40	.20	.20
3	.20	.20	.70	.40	27	.80	1.9	1.0	.80	.40	.20	.20
4	.20	.20	112	.40	24	.80	1.9	.90	.80	.40	.20	.10
5	.20	.20	1.9	.40	4.4	6.3	17	.90	.80	.40	.20	.10
6	.20	.20	1.9	.40	2.6	286	7.2	.90	.80	.40	.20	.10
7	.10	.20	1.9	.40	2.2	22	5.5	.90	.80	.30	.20	.10
8	.20	.20	1.5	.40	2.0	179	4.6	.90	.80	.40	.20	.10
9	.20	.20	.90	.40	9.2	35	9.7	.90	.80	.40	.20	.10
10	.20	.10	.50	.40	7.6	22	5.5	.80	.80	.30	.20	.40
11	.20	.10	.40	.40	2.9	17	4.6	.80	.80	.30	.20	.20
12	.20	.10	.50	.40	2.2	12	4.2	.80	.70	.30	.20	.20
13	.20	.10	.50	.40	1.9	10	3.9	.70	.70	.40	.20	.20
14	.20	.10	.40	.40	1.9	9.4	3.7	.70	.60	.40	.20	.40
15	.20	.20	.40	.40	1.7	5.7	3.6	.70	.70	.40	.20	.30
16	.10	.20	.50	.40	1.7	5.3	3.2	.70	.70	.40	.20	.20
17	.10	.20	.60	.40	1.5	4.2	3.0	.70	.80	.30	.20	.20
18	.10	.20	.30	.40	1.3	3.7	2.6	.80	.70	.30	.20	.20
19	.20	.20	.30	.40	1.3	3.7	2.4	.80	.70	.40	.20	.20
20	.20	.20	.30	.40	1.2	3.6	2.3	.80	.70	.40	.20	.20
21	.20	.20	.40	.40	1.2	3.4	2.0	.80	.70	.40	.20	.20
22	.20	.20	.30	.40	1.1	7.1	1.7	.80	.70	.30	.20	.20
23	.20	.20	.20	.40	1.1	3.4	1.4	.80	.70	.40	.20	.20
24	.20	.20	.20	.40	1.0	3.0	1.3	.70	.60	.40	.20	.20
25	.20	.20	.30	.40	.80	2.9	1.4	.60	.50	.40	.20	.20
26	.20	.20	.30	.40	.90	2.0	1.2	.60	.50	.30	.20	.20
27	.20	.20	.30	.40	.80	1.9	1.2	.60	.50	.30	.20	.20
28	.30	.20	13	.40	.80	1.9	1.1	.60	.50	.30	.20	.20
29	.20	.20	2.0	.40	---	1.8	1.1	.60	.40	.20	.20	.20
30	.20	.20	.50	.40	---	1.9	1.1	.60	.40	.20	.20	.20
31	.20	---	.40	.40	---	2.0	---	.60	---	.30	.20	---
TOTAL	5.90	5.50	143.60	12.40	109.60	659.40	104.2	23.90	20.50	10.90	6.20	5.90
MEAN	.19	.18	4.63	.40	3.91	21.3	3.47	.77	.68	.35	.20	.20
MAX	.30	.20	112	.40	27	286	17	1.0	.80	.40	.20	.40
MIN	.10	.10	.10	.40	.40	.80	1.1	.60	.40	.20	.20	.10
AC-FT	12	11	285	25	217	1310	207	47	41	22	12	12

CAL YR 1974 TOTAL 2148.50 MEAN 5.89 MAX 1060 MIN .10 AC-FT 4260
WTR YR 1975 TOTAL 1109.00 MEAN 3.04 MAX 286 MIN .10 AC-FT 2200

11105500 MALIBU CREEK AT CRATER CAMP, NEAR CALABASAS, CALIF.

LOCATION.--Lat 34°04'40", long 118°42'03", in SW¼ sec.18, T.1 S., R.17 W., Los Angeles County, on right bank 700 ft (213 m) downstream from Cold Creek, 0.2 mi (0.3 km) downstream from Crater Camp, and 6 mi (10 km) southwest of Calabasas.

DRAINAGE AREA.--105 mi^2 (272 km^2).

PERIOD OF RECORD.--January 1931 to current year.

GAGE.--Water-stage recorder. Datum of gage is 432.82 ft (131.924 m) above mean sea level (levels by Los Angeles County Flood Control District). Prior to Nov. 16, 1954, at datum 2.31 ft (0.704 m) lower.

AVERAGE DISCHARGE.--44 years, 21.7 ft^3/s (0.614 m^3/s), 15,720 acre-ft/yr (19.4 hm^3/yr).

EXTREMES.--Current year: Maximum discharge, 2,670 ft^3/s (75.6 m^3/s) Dec. 4 (gage height, 7.81 ft or 2.380 m); minimum daily, 2.3 ft^3/s (0.065 m^3/s) July 31.
Period of record: Maximum discharge, 33,800 ft^3/s (957 m^3/s) Jan. 25, 1969 (gage height, 21.43 ft or 6.532 m), from rating curve extended above 6,000 ft^3/s (170 m^3/s) on basis of slope-area measurements at gage heights 17.27 ft (5.264 m) and 21.43 ft (6.532 m); no flow at times in some years prior to 1961.

REMARKS.--Records fair. Flow partly regulated by many small recreational reservoirs. Small diversions above station for domestic use.

COOPERATION.--Records furnished by Los Angeles County Flood Control District.

DISCHARGE, IN CUBIC FEET PER SECOND, WATER YEAR OCTOBER 1974 TO SEPTEMBER 1975
MEAN VALUES

DAY	OCT	NOV	DEC	JAN	FEB	MAR	APR	MAY	JUN	JUL	AUG	SEP
1	4.2	5.8	5.6	15	9.0	9.3	19	10	7.4	4.6	3.6	3.1
2	4.6	4.6	5.1	14	18	9.3	19	9.3	7.1	4.2	4.0	3.1
3	4.0	5.1	9.6	9.9	192	8.6	19	7.7	6.8	4.4	4.2	3.3
4	4.4	4.6	501	7.7	69	8.3	19	7.7	6.6	3.8	6.4	3.3
5	4.6	4.8	44	8.0	40	12	42	6.1	5.8	4.4	6.4	3.6
6	4.6	4.2	17	8.3	32	121	54	5.1	5.4	4.0	6.4	4.2
7	5.1	5.4	11	7.4	26	117	49	5.6	4.8	3.3	6.1	4.4
8	5.1	6.1	12	7.1	14	519	31	5.6	5.8	3.6	4.4	3.8
9	4.4	4.8	8.3	8.0	28	149	47	5.6	6.1	4.0	3.6	3.3
10	5.1	5.4	6.4	8.3	46	131	28	5.6	5.1	3.8	3.1	2.9
11	5.4	5.6	6.8	8.0	26	131	22	6.4	5.4	3.6	3.1	2.9
12	4.6	5.4	7.1	7.4	22	82	20	7.1	4.4	3.3	3.3	3.8
13	4.2	5.6	6.6	7.7	19	64	19	6.8	5.1	3.6	4.2	3.8
14	4.2	5.1	7.1	7.4	18	67	16	6.6	4.8	4.2	4.6	3.1
15	4.2	5.4	7.4	7.7	17	57	13	7.1	5.1	4.4	4.2	3.1
16	4.6	5.4	7.7	7.1	15	49	14	8.3	5.4	4.2	3.8	4.4
17	4.0	5.6	7.1	8.0	11	46	13	9.9	5.1	4.0	3.8	3.6
18	5.1	4.8	6.6	8.6	9.0	34	17	9.9	6.1	3.1	4.2	3.6
19	4.4	5.6	7.4	8.3	9.0	31	15	8.3	5.8	2.7	4.2	3.3
20	4.4	5.4	7.4	8.0	9.9	29	15	9.0	6.4	2.7	4.0	3.1
21	4.2	5.8	7.1	8.0	10	26	14	9.0	5.8	3.3	4.0	4.2
22	4.2	5.1	7.4	8.0	10	33	12	9.9	5.8	2.9	4.4	3.3
23	4.4	4.6	7.1	8.3	11	39	13	9.3	6.4	2.7	4.4	3.6
24	4.6	4.6	7.1	8.0	9.6	29	11	10	5.6	3.3	3.6	2.9
25	5.8	5.1	7.7	7.7	7.7	26	11	9.6	5.1	2.5	3.6	2.9
26	4.4	5.1	8.0	7.7	8.6	29	13	8.3	3.6	2.7	3.1	3.3
27	5.1	5.1	6.6	8.3	9.0	23	11	7.1	4.6	3.3	2.5	3.8
28	6.4	6.4	115	8.3	9.3	21	11	7.1	4.6	3.3	2.7	4.0
29	5.1	6.1	80	7.7	---	18	9.3	7.4	4.8	2.5	3.8	4.4
30	5.8	5.6	25	8.0	---	19	11	7.7	5.4	2.9	3.8	4.0
31	6.1	---	18	8.3	---	18	---	7.7	---	2.3	3.3	---
TOTAL	147.3	158.2	980.2	260.2	705.1	1955.5	607.3	240.8	166.2	107.6	126.8	106.1
MEAN	4.75	5.27	31.6	8.39	25.2	63.1	20.2	7.77	5.54	3.47	4.09	3.54
MAX	6.4	6.4	501	15	192	519	54	10	7.4	4.6	6.4	4.4
MIN	4.0	4.2	5.1	7.1	7.7	8.3	9.3	5.1	3.6	2.3	2.5	2.9
AC-FT	292	314	1940	516	1400	3880	1200	478	330	213	252	210

CAL YR 1974 TOTAL 8755.8 MEAN 24.0 MAX 2240 MIN 2.7 AC-FT 17370
WTR YR 1975 TOTAL 5561.3 MEAN 15.2 MAX 519 MIN 2.3 AC-FT 11030

11105850 ARROYO SIMI NEAR SIMI, CALIF.

LOCATION.--Lat 34°16'41", long 118°47'43", on line between secs.7 and 8, T.2 N., R.18 W., Ventura County, on downstream side of bridge on Los Angeles Avenue, in town of Simi Valley, 0.5 mi (0.8 km) upstream from Brea Canyon, and 1.1 mi (1.8 km) northwest of Simi.

DRAINAGE AREA.--70.6 mi^2 (182.9 km^2).

PERIOD OF RECORD.--October 1933 to September 1951, October 1952 to current year. Monthly discharge, in acre-ft only, for October 1933 to September 1951, October 1952 to October 1968, published in WSP 2128.

GAGE.--Water-stage recorder. Datum of gage is 700.59 ft (213.540 m) above mean sea level (levels by Ventura County Flood Control District).

AVERAGE DISCHARGE.--7 years (1969-75), 7.24 ft^3/s (0.205 m^3/s), 5,250 acre-ft/yr (6.47 hm^3/yr).

EXTREMES.--Current year: Maximum discharge, 2,420 ft^3/s (68.5 m^3/s) Dec. 4 (gage height, 3.25 ft or 0.991 m); minimum daily, 0.05 ft^3/s (0.001 m^3/s) Oct. 2, Apr. 26-28, Sept. 28.
Period of record: Maximum discharge, 6,330 ft^3/s (179 m^3/s) Feb. 25, 1969 (gage height, 5.7 ft or 1.74 m, from floodmark); no flow at times in some years.

REMARKS.--Records good above 1 ft^3/s (0.028 m^3/s) and fair below. No regulation above station. Pumping from wells for irrigation. City of Simi Valley intermittently discharged ground water into channel from extraction wells this year.

COOPERATION.--Records furnished by Ventura County Flood Control District and reviewed by Geological Survey.

DISCHARGE, IN CUBIC FEET PER SECOND, WATER YEAR OCTOBER 1974 TO SEPTEMBER 1975
MEAN VALUES

DAY	OCT	NOV	DEC	JAN	FEB	MAR	APR	MAY	JUN	JUL	AUG	SEP
1	.55	1.0	1.3	.55	1.0	2.0	1.0	2.0	3.8	2.0	2.0	2.4
2	.05	1.0	1.3	1.0	.98	2.0	1.0	2.0	3.8	1.3	1.5	2.4
3	.55	.76	20	1.0	82	2.0	1.0	2.0	3.8	2.0	1.5	2.8
4	.33	.76	267	1.0	12	2.0	1.3	2.0	3.8	3.3	2.6	5.0
5	.76	1.0	2.4	1.0	2.8	54	24	1.6	3.8	2.0	3.3	4.4
6	.16	1.3	1.3	1.3	2.0	50	47	1.6	3.8	1.0	2.4	2.8
7	18	1.3	1.3	1.0	2.0	12	3.4	1.6	3.8	1.0	2.0	2.8
8	3.4	1.3	1.0	1.3	3.9	192	1.3	1.6	3.8	1.0	1.6	4.4
9	1.0	1.3	1.3	1.0	23	4.4	31	1.6	3.8	1.0	2.4	5.6
10	1.0	1.3	1.0	1.0	9.2	34	13	1.6	3.8	2.8	2.0	7.0
11	1.0	.55	1.0	1.0	2.4	2.8	2.0	1.6	3.8	3.3	2.0	7.0
12	1.0	.33	1.3	.76	2.4	1.6	1.3	1.6	3.8	2.4	2.4	5.0
13	1.0	.55	1.3	1.6	2.4	3.8	1.3	1.6	3.8	2.0	3.3	3.8
14	1.0	1.6	1.0	1.6	2.4	3.2	1.3	2.0	3.8	2.4	2.8	1.3
15	1.0	2.0	1.0	1.0	2.4	2.0	2.8	2.0	3.8	2.8	.92	3.8
16	1.0	2.0	1.0	1.3	2.0	4.2	1.6	2.0	3.8	3.8	2.2	2.4
17	.33	2.0	1.0	1.3	2.0	2.0	2.0	2.0	3.8	3.8	3.3	1.3
18	.33	.55	1.0	1.3	2.0	2.0	2.0	2.4	3.8	3.8	3.3	1.3
19	1.0	.16	1.3	1.3	2.4	2.0	1.6	2.0	2.4	3.8	3.3	1.6
20	1.0	.16	1.3	1.3	2.0	2.4	1.6	2.0	2.4	3.8	3.3	3.8
21	1.0	.87	1.3	1.3	2.0	2.4	1.6	2.4	3.3	3.3	3.8	1.3
22	1.0	3.0	1.3	.76	2.0	18	1.6	3.3	3.3	3.3	3.8	1.3
23	1.0	1.3	1.3	.76	2.0	1.0	1.3	3.8	2.8	3.3	3.8	1.3
24	1.0	1.3	1.3	1.0	2.0	1.0	.33	3.8	2.4	2.4	3.3	3.3
25	1.0	1.3	1.3	.76	2.0	1.3	.33	3.3	2.5	1.6	2.4	2.4
26	1.0	1.3	1.3	1.0	2.0	1.0	.05	3.3	2.4	2.4	2.4	2.8
27	1.0	1.3	1.9	1.3	2.0	1.0	.05	3.8	2.0	2.4	4.4	1.0
28	21	1.3	93	1.0	2.0	.76	.05	3.8	2.0	2.0	2.4	.05
29	1.0	1.3	7.1	.76	---	.76	.55	3.8	1.0	1.6	2.4	1.6
30	1.0	1.3	1.6	1.3	---	1.0	1.6	3.8	2.0	1.6	1.6	3.8
31	1.0	---	1.0	1.6	---	1.0	---	3.8	---	2.0	2.4	---
TOTAL	65.46	35.19	421.5	34.15	177.28	409.62	148.96	75.7	96.9	75.2	80.82	89.75
MEAN	2.11	1.17	13.6	1.10	6.33	13.2	4.97	2.44	3.23	2.43	2.61	2.99
MAX	21	3.0	267	1.6	82	192	47	3.8	3.8	3.8	4.4	7.0
MIN	.05	.16	1.0	.55	.98	.76	.05	1.6	1.0	1.0	.92	.05
AC-FT	130	70	836	68	352	812	295	150	192	149	160	178

CAL YR 1974 TOTAL 2507.19 MEAN 6.87 MAX 869 MIN .05 AC-FT 4970
WTR YR 1975 TOTAL 1710.53 MEAN 4.69 MAX 267 MIN .05 AC-FT 3390

Peak discharge (base, 500 ft^3/s)

Date	Time	G.H.	Discharge	Date	Time	G.H.	Discharge
12-4	0220	3.25	2,420	2-3	0020	2.36	1,020
12-28	0340	2.07	710	3-8	1020	1.99	660

11106400 CONEJO CREEK ABOVE HIGHWAY 101, NEAR CAMARILLO, CALIF.

LOCATION.--Lat 34°14'12", long 118°57'50", Ventura County, on left bank 2.6 mi (4.2 km) upstream from U.S. Highway 101, and 4.4 mi (7.1 km) northeast of Camarillo.

DRAINAGE AREA.--64.2 mi^2 (166.3 km^2).

PERIOD OF RECORD.--October 1972 to current year.

GAGE.--Water-stage recorder. Altitude of gage is 180 ft (55 m), from topographic map.

EXTREMES.--Current year: Maximum discharge, 3,750 ft^3/s (106 m^3/s) Dec. 4 (gage height, 6.36 ft or 1.939 m); minimum daily, 4.7 ft^3/s (0.13 m^3/s) Oct. 17.
Period of record: Maximum discharge, 5,740 ft^3/s (163 m^3/s) Feb. 11, 1973 (gage height, 7.35 ft or 2.240 m); minimum daily, 0.13 ft^3/s (0.004 m^3/s) May 31, 1973.

REMARKS.--Records good. No regulation or diversion above station.

COOPERATION.--Records furnished by Ventura County Flood Control District and reviewed by Geological Survey.

DISCHARGE, IN CUBIC FEET PER SECOND, WATER YEAR OCTOBER 1974 TO SEPTEMBER 1975
MEAN VALUES

DAY	OCT	NOV	DEC	JAN	FEB	MAR	APR	MAY	JUN	JUL	AUG	SEP
1	8.0	6.1	7.5	7.0	7.5	7.5	11	9.6	9.0	8.0	7.5	8.0
2	8.0	7.0	8.5	7.5	87	8.0	10	9.6	9.6	8.5	7.5	8.5
3	8.0	7.0	14	8.5	270	9.0	11	9.6	9.6	7.5	7.5	8.5
4	8.0	7.6	455	8.5	26	9.0	11	9.0	9.0	7.5	7.0	8.5
5	8.0	7.6	15	8.5	16	38	23	9.6	9.0	7.0	5.6	8.5
6	8.0	5.6	10	11	11	109	75	9.6	9.6	6.5	6.1	8.0
7	12	7.8	8.5	10	9.6	84	25	9.0	9.0	7.5	6.1	8.0
8	11	5.2	8.0	10	9.6	242	13	9.6	9.0	8.0	6.5	9.0
9	7.3	6.1	8.5	9.0	50	23	17	9.0	9.6	8.0	6.5	8.5
10	6.9	6.5	8.0	9.0	17	75	12	9.0	10	8.0	7.5	9.0
11	8.0	7.0	8.5	10	11	22	11	9.6	9.0	8.0	8.0	8.5
12	7.5	7.1	8.0	9.6	9.6	14	10	9.6	9.0	8.0	8.0	8.0
13	7.0	6.5	8.0	9.4	9.6	11	10	10	9.0	7.0	8.0	8.0
14	6.7	7.4	7.5	7.3	10	19	11	10	9.6	7.5	8.0	8.5
15	6.4	6.1	7.5	6.1	9.6	11	13	10	9.0	7.5	9.0	9.0
16	8.0	6.5	9.2	7.0	9.0	14	11	10	9.0	8.0	8.5	9.0
17	4.7	7.5	7.6	7.5	8.0	13	13	9.6	9.0	8.0	9.0	8.0
18	6.5	8.0	5.6	7.5	8.5	11	10	9.0	9.0	7.5	8.5	6.1
19	7.5	7.5	6.5	7.5	8.5	10	10	9.6	8.5	7.7	8.5	7.5
20	8.0	7.0	6.5	8.5	8.5	10	10	10	8.5	8.0	8.5	7.5
21	6.1	7.0	7.0	8.0	8.5	10	10	9.6	8.5	8.0	10	7.0
22	5.9	7.0	6.5	8.5	7.5	30	10	9.6	8.5	7.5	8.5	7.5
23	6.5	6.1	6.1	8.5	7.5	13	10	9.9	9.0	8.0	8.5	7.5
24	6.6	6.5	6.5	8.0	8.0	11	10	7.0	8.5	8.0	8.5	7.5
25	6.5	7.0	6.5	8.0	8.0	13	10	7.5	8.0	8.0	9.0	7.5
26	7.5	7.7	5.2	8.0	8.0	13	9.0	7.8	8.0	8.0	9.6	7.5
27	7.5	9.0	6.6	8.5	7.5	13	8.5	7.7	8.0	7.5	8.5	7.5
28	20	7.5	154	8.0	8.0	12	9.0	8.5	8.0	8.5	9.0	8.0
29	10	6.5	23	7.5	---	11	9.6	9.0	7.5	9.0	8.0	8.5
30	7.6	6.5	8.5	7.5	---	12	9.6	8.5	8.0	8.5	8.0	8.5
31	7.9	---	7.0	7.5	---	12	---	8.5	---	8.5	8.0	---
TOTAL	247.6	207.9	854.8	257.4	659.0	889.5	412.7	284.6	265.0	243.2	247.4	241.6
MEAN	7.99	6.93	27.6	8.30	23.5	28.7	13.8	9.18	8.83	7.85	7.98	8.05
MAX	20	9.0	455	11	270	242	75	10	10	9.0	10	9.0
MIN	4.7	5.2	5.2	6.1	7.5	7.5	8.5	7.0	7.5	6.5	5.6	6.1
AC-FT	491	412	1700	511	1310	1760	819	565	526	482	491	479

CAL YR 1974 TOTAL 5742.8 MEAN 15.7 MAX 1330 MIN 3.6 AC-FT 11390
WTR YR 1975 TOTAL 4810.7 MEAN 13.2 MAX 455 MIN 4.7 AC-FT 9540

Peak discharge (base, 400 ft^3/s)

Date	Time	G.H.	Discharge	Date	Time	G.H.	Discharge
12-4	0230	6.36	3,750	3-6	0400	2.44	413
12-28	0430	3.57	830	3-8	0330	3.30	715
2-3	0100	5.31	2,170	3-10	1725	2.43	400

11106550 CALLEGUAS CREEK AT CAMARILLO STATE HOSPITAL, CALIF.

LOCATION.--Lat 34°10'46", long 119°02'20", in Guadalasca Grant, Ventura County, on downstream side of county road bridge, 1.0 mi (1.6 km) northeast of Camarillo State Hospital, and 1.4 mi (2.3 km) downstream from Conejo Creek.

DRAINAGE AREA.--248 mi^2 (642 km^2).

PERIOD OF RECORD.--October 1968 to current year.

GAGE.--Water-stage recorder. Datum of gage is 58.42 ft (17.806 m) above mean sea level (levels by Ventura County Flood Control District).

AVERAGE DISCHARGE.--7 years, 24.9 ft^3/s (0.705 m^3/s), 18,040 acre-ft/yr (22.2 hm^3/yr).

EXTREMES.--Current year: Maximum discharge, 2,580 ft^3/s (73.1 m^3/s) Dec. 4 (gage height, 3.95 ft or 1.204 m); minimum daily, 1.6 ft^3/s (0.045 m^3/s) Aug. 10.
Period of record: Maximum discharge, 16,300 ft^3/s (462 m^3/s) Feb. 25, 1969 (gage height, 8.50 ft or 2.591 m); no flow at times in some years.

REMARKS.--Records good. No regulation above station. Pumping for irrigation in valley above station. Sustained flow from city of Thousand Oaks reclamation plant.

COOPERATION.--Records furnished by Ventura County Flood Control District and reviewed by the Geological Survey.

DISCHARGE, IN CUBIC FEET PER SECOND, WATER YEAR OCTOBER 1974 TO SEPTEMBER 1975
MEAN VALUES

DAY	OCT	NOV	DEC	JAN	FEB	MAR	APR	MAY	JUN	JUL	AUG	SEP
1	10	6.0	9.3	9.3	10	10	13	10	7.0	6.0	3.4	10
2	9.3	3.4	10	8.1	124	9.3	12	9.3	8.1	6.0	5.1	8.1
3	11	4.2	15	9.3	434	9.3	10	10	7.0	6.0	4.2	7.0
4	10	6.0	544	12	41	10	10	10	7.0	5.1	3.4	5.1
5	9.3	7.0	26	12	24	16	19	9.3	5.1	5.1	3.4	6.0
6	10	7.0	12	13	15	178	70	9.3	6.0	5.1	3.4	7.0
7	12	6.0	9.3	12	12	103	60	8.1	6.0	5.1	2.7	6.0
8	16	6.0	7.0	16	10	562	16	7.0	7.0	7.0	2.7	5.1
9	12	6.0	5.1	12	55	38	18	8.1	6.0	7.0	2.7	8.1
10	10	5.1	9.3	9.3	35	80	16	7.0	10	6.0	1.6	10
11	8.1	4.2	7.0	9.3	15	42	13	7.0	9.3	6.0	2.7	13
12	8.1	6.0	7.0	9.3	10	18	13	7.0	5.1	6.0	2.7	10
13	7.0	4.2	9.3	12	10	16	13	7.0	8.1	6.0	2.1	9.3
14	7.0	5.1	9.3	10	12	24	13	7.0	8.1	6.0	3.4	9.3
15	8.1	6.0	9.3	9.3	13	16	15	7.0	7.0	6.0	5.1	10
16	7.0	7.0	12	9.3	13	16	12	9.3	7.0	7.0	5.1	10
17	8.1	7.0	15	9.3	13	16	13	8.1	8.1	6.0	6.0	10
18	5.1	8.1	12	9.3	13	15	10	7.0	7.0	4.2	6.0	9.3
19	5.1	10	10	9.3	13	13	10	7.0	7.0	5.1	6.0	8.1
20	6.0	10	9.3	9.3	13	15	10	8.1	8.1	5.1	7.0	9.3
21	7.0	10	10	8.1	12	15	12	6.0	8.1	5.1	8.1	9.3
22	7.0	10	12	8.1	12	56	12	7.0	8.1	4.2	9.3	9.3
23	7.0	9.3	12	8.1	12	16	12	12	7.0	4.2	8.1	8.0
24	7.0	7.0	12	8.1	12	12	13	7.0	8.1	3.4	6.0	7.0
25	5.1	8.1	12	9.3	13	15	15	7.0	8.1	3.4	4.2	6.0
26	6.0	9.3	7.0	10	13	13	12	5.1	7.0	2.7	4.2	5.1
27	5.1	10	9.3	12	12	12	9.3	8.1	7.0	3.4	6.0	6.0
28	8.1	10	189	13	12	12	10	7.0	6.0	5.1	5.1	6.0
29	22	10	57	13	---	13	12	6.0	7.0	5.1	8.1	7.0
30	9.3	9.3	13	13	---	13	10	5.1	7.0	4.2	8.1	7.0
31	7.0	---	9.3	12	---	13	---	6.0	---	3.4	10	---
TOTAL	269.8	217.3	1089.8	324.1	983	1396.6	483.3	238.9	217.4	160.0	155.9	241.4
MEAN	8.70	7.24	35.2	10.5	35.1	45.1	16.1	7.71	7.25	5.16	5.03	8.05
MAX	22	10	544	16	434	562	70	12	10	7.0	10	13
MIN	5.1	3.4	5.1	8.1	10	9.3	9.3	5.1	5.1	2.7	1.6	5.1
AC-FT	535	431	2160	643	1950	2770	959	474	431	317	309	479

CAL YR 1974 TOTAL 6914.76 MEAN 18.9 MAX 1950 MIN .73 AC-FT 13720
WTR YR 1975 TOTAL 5777.50 MEAN 15.8 MAX 562 MIN 1.6 AC-FT 11460

Peak discharge (base, 300 ft^3/s)

Date	Time	G.H.	Discharge	Date	Time	G.H.	Discharge
12-4	0445	3.95	2,580	3-6	0545	2.43	625
12-28	0700	2.44	634	3-8	1045	3.36	1,670
2-3	0200	3.46	1,820	3-10	2000	2.08	351

11106550 CALLEGUAS CREEK AT CAMARILLO STATE HOSPITAL, CALIF.--Continued

PERIOD OF RECORD.--Water temperatures: October 1970 to current year.
Sediment records: October 1968 to current year.

EXTREMES.--Current year:
Sediment concentrations: Maximum daily, 7,730 mg/l Mar. 8; minimum daily, 10 mg/l Sept. 27-30.
Sediment discharge: Maximum daily, 30,000 tons (27,200 tonnes) Dec. 4; minimum daily, 0.11 ton (0.10 tonne) Aug. 13.
Period of record:
Sediment concentrations: Maximum daily, 62,900 mg/l Jan. 25, 1969; minimum daily, no flow for many days during most years.
Sediment discharge: Maximum daily, 1,700,000 tons (1,540,000 tonnes) Jan. 25, 1969; minimum daily, 0 tons (0 tonnes) on many days during most years.

TEMPERATURE (DEG. C) OF WATER, WATER YEAR OCTOBER 1974 TO SEPTEMBER 1975
ONCE-DAILY

DAY	OCT	NOV	DEC	JAN	FEB	MAR	APR	MAY	JUN	JUL	AUG	SEP
1	---		---		12.0	---	---	---	---		---	---
2	---		---		11.5	---	---	---	---		---	---
3	---		---		13.0	---	---	---	---		---	24.5
4	---		12.5		---	---	---	---	---		---	---
5	---		15.0		---	---	---	---	18.0		26.5	---
6	---		16.0		---	---	---	---	---		---	---
7	19.0		---		---	13.0	10.5	---	---		---	---
8	---		---		---	---	12.0	---	---		---	---
9	---		---		---	---	---	---	---		---	---
10	---		---		17.5	13.5	---	14.0	27.0		---	---
11	---		---		---	10.0	---	---	---		---	---
12	---		---		---	---	---	---	---		---	---
13	---		---		---	---	---	---	---		26.0	---
14	---		---		---	---	14.0	---	---		---	---
15	---		---		---	---	---	---	---		---	---
16	---		---		---	---	---	17.0	---		---	---
17	---		---		---	---	---	---	---		---	---
18	---		---		---	---	---	---	---		---	---
19	---		---		---	---	---	---	---		---	---
20	---		11.0		---	---	---	---	---		---	---
21	---		---		---	---	---	---	---		---	---
22	---		---		---	---	14.0	---	---		---	---
23	---		---		---	---	---	---	---		---	---
24	---		---		---	---	---	---	---		---	---
25	---		---		---	---	---	---	---		---	---
26	---		---		---	---	---	---	---		---	---
27	---		---		---	---	---	---	---		---	---
28	16.0		---		---	11.5	---	---	---		---	---
29	---		9.5		---	---	---	---	---		---	---
30	---		9.5		---	---	24.0	---	---		---	22.5
31	18.0		6.0		---	---	---	---	---		---	---
MONTH	---		---		---	---	---	---	---		---	---

11106550 CALLEGUAS CREEK AT CAMARILLO STATE HOSPITAL, CALIF.--Continued

SUSPENDED-SEDIMENT DISCHARGE (TONS/DAY), WATER YEAR OCTOBER 1974 TO SEPTEMBER 1975

	OCTOBER			NOVEMBER			DECEMBER		
DAY	MEAN DISCHARGE (CFS)	MEAN CONCEN-TRATION (MG/L)	SEDIMENT DISCHARGE (TONS/DAY)	MEAN DISCHARGE (CFS)	MEAN CONCEN-TRATION (MG/L)	SEDIMENT DISCHARGE (TONS/DAY)	MEAN DISCHARGE (CFS)	MEAN CONCEN-TRATION (MG/L)	SEDIMENT DISCHARGE (TONS/DAY)
1	10	25	.68	6.0	25	.41	9.3	25	.63
2	9.3	20	.50	3.4	20	.18	10	30	.81
3	11	25	.74	4.2	20	.23	15	50	2.0
4	10	25	.68	6.0	25	.41	544	7470	30000
5	9.3	25	.63	7.0	25	.47	26	70	4.9
6	10	25	.68	7.0	25	.47	12	60	1.9
7	12	25	.81	6.0	20	.32	9.3	50	1.3
8	16	30	1.3	6.0	20	.32	7.0	45	.85
9	12	25	.81	6.0	15	.24	5.1	40	.55
10	10	25	.68	5.1	15	.21	9.3	45	1.1
11	8.1	25	.55	4.2	15	.17	7.0	40	.76
12	8.1	20	.44	6.0	20	.32	7.0	35	.66
13	7.0	20	.38	4.2	20	.23	9.3	35	.88
14	7.0	20	.38	5.1	20	.28	9.3	30	.75
15	8.1	25	.55	6.0	25	.41	9.3	30	.75
16	7.0	25	.47	7.0	30	.57	12	80	2.6
17	8.1	25	.55	7.0	25	.47	15	170	6.9
18	5.1	20	.28	8.1	30	.66	12	150	4.9
19	5.1	20	.28	10	35	.95	10	130	3.5
20	6.0	20	.32	10	30	.81	9.3	120	3.0
21	7.0	25	.47	10	30	.81	10	100	2.7
22	7.0	25	.47	10	25	.68	12	80	2.6
23	7.0	25	.47	9.3	25	.63	12	70	2.3
24	7.0	25	.47	7.0	25	.47	12	60	1.9
25	5.1	25	.34	8.1	30	.66	12	50	1.6
26	6.0	30	.49	9.3	30	.75	7.0	40	.76
27	5.1	40	.55	10	35	.95	9.3	30	.75
28	8.1	50	1.1	10	30	.81	189	4680	4050
29	22	430	26	10	30	.81	57	1040	328
30	9.3	45	1.1	9.3	25	.63	13	50	1.8
31	7.0	30	.57	---	---	---	9.3	45	1.1
TOTAL	269.8	---	43.74	217.3	---	15.33	1089.8	---	34432.25

	JANUARY			FEBRUARY			MARCH		
DAY	MEAN DISCHARGE (CFS)	MEAN CONCEN-TRATION (MG/L)	SEDIMENT DISCHARGE (TONS/DAY)	MEAN DISCHARGE (CFS)	MEAN CONCEN-TRATION (MG/L)	SEDIMENT DISCHARGE (TONS/DAY)	MEAN DISCHARGE (CFS)	MEAN CONCEN-TRATION (MG/L)	SEDIMENT DISCHARGE (TONS/DAY)
1	9.3	40	1.0	10	85	2.3	10	70	1.9
2	8.1	35	.77	124	1610	2260	9.3	65	1.6
3	9.3	35	.88	434	7400	19700	9.3	60	1.5
4	12	50	1.6	41	560	71	10	65	1.8
5	12	45	1.5	24	250	16	16	130	5.6
6	13	60	2.1	15	120	4.9	178	3870	3160
7	12	50	1.6	12	80	2.6	103	1150	505
8	16	120	5.2	10	60	1.6	562	7730	18500
9	12	70	2.3	55	1350	200	38	230	24
10	9.3	60	1.5	35	530	50	80	1280	780
11	9.3	55	1.4	15	100	4.1	42	580	66
12	9.3	50	1.3	10	80	2.2	18	165	8.0
13	12	70	2.3	10	70	1.9	16	130	5.6
14	10	60	1.6	12	80	2.6	24	280	18
15	9.3	55	1.4	13	90	3.2	16	120	5.2
16	9.3	50	1.3	13	85	3.0	16	100	4.3
17	9.3	45	1.1	13	80	2.8	16	90	3.9
18	9.3	40	1.0	13	80	2.8	15	80	3.2
19	9.3	40	1.0	13	75	2.6	13	70	2.5
20	9.3	35	.88	13	75	2.6	15	80	3.2
21	8.1	35	.77	12	70	2.3	15	70	2.8
22	8.1	30	.66	12	70	2.3	56	1900	287
23	8.1	30	.66	12	65	2.1	16	130	5.6
24	8.1	30	.66	12	70	2.3	12	85	2.8
25	9.3	50	1.3	13	80	2.8	15	130	5.3
26	10	55	1.5	13	85	3.0	13	110	3.9
27	12	60	1.9	12	80	2.6	12	100	3.2
28	13	65	2.3	12	75	2.4	12	115	3.7
29	13	70	2.5	---	---	---	13	110	3.9
30	13	75	2.6	---	---	---	13	100	3.5
31	12	80	2.6	---	---	---	13	95	3.3
TOTAL	324.1	---	49.18	983	---	22356.0	1396.6	---	23426.3

11106550 CALLEGUAS CREEK AT CAMARILLO STATE HOSPITAL, CALIF.--Continued

SUSPENDED-SEDIMENT DISCHARGE (TONS/DAY), WATER YEAR OCTOBER 1974 TO SEPTEMBER 1975

	APRIL			MAY			JUNE		
DAY	MEAN DISCHARGE (CFS)	MEAN CONCEN-TRATION (MG/L)	SEDIMENT DISCHARGE (TONS/DAY)	MEAN DISCHARGE (CFS)	MEAN CONCEN-TRATION (MG/L)	SEDIMENT DISCHARGE (TONS/DAY)	MEAN DISCHARGE (CFS)	MEAN CONCEN-TRATION (MG/L)	SEDIMENT DISCHARGE (TONS/DAY)
1	13	90	3.2	10	65	1.8	7.0	80	1.5
2	12	85	2.8	9.3	60	1.5	8.1	80	1.8
3	10	80	2.2	10	55	1.5	7.0	85	1.6
4	10	75	2.0	10	50	1.4	7.0	90	1.7
5	19	170	8.7	9.3	50	1.3	5.1	80	1.1
6	70	1600	302	9.3	45	1.1	6.0	70	1.1
7	60	1230	199	8.1	45	.98	6.0	60	.97
8	16	55	2.4	7.0	40	.76	7.0	50	.95
9	18	60	2.9	8.1	50	1.1	6.0	45	.73
10	16	55	2.4	7.0	45	.85	10	60	1.6
11	13	55	1.9	7.0	50	.95	9.3	55	1.4
12	13	50	1.8	7.0	50	.95	5.1	50	.69
13	13	50	1.8	7.0	45	.85	8.1	60	1.3
14	13	50	1.8	7.0	45	.85	8.1	55	1.2
15	15	70	2.8	7.0	45	.85	7.0	50	.95
16	12	65	2.1	9.3	90	2.3	7.0	50	.95
17	13	65	2.3	8.1	70	1.5	8.1	55	1.2
18	10	60	1.6	7.0	65	1.2	7.0	50	.95
19	10	55	1.5	7.0	60	1.1	7.0	50	.95
20	10	60	1.6	8.1	55	1.2	8.1	55	1.2
21	12	80	2.6	6.0	50	.81	8.1	50	1.1
22	12	75	2.4	7.0	45	.85	8.1	45	.98
23	12	70	2.3	12	130	4.2	7.0	45	.85
24	13	65	2.3	7.0	90	1.7	8.1	50	1.1
25	15	80	3.2	7.0	85	1.6	8.1	50	1.1
26	12	75	2.4	5.1	80	1.1	7.0	45	.85
27	9.3	70	1.8	8.1	90	2.0	7.0	45	.85
28	10	65	1.8	7.0	85	1.6	6.0	40	.65
29	12	70	2.3	6.0	80	1.3	7.0	45	.85
30	10	65	1.8	5.1	75	1.0	7.0	45	.85
31	---	---	---	6.0	75	1.2	---	---	---
TOTAL	483.3	---	569.7	238.9	---	41.40	217.4	---	33.02

	JULY			AUGUST			SEPTEMBER		
DAY	MEAN DISCHARGE (CFS)	MEAN CONCEN-TRATION (MG/L)	SEDIMENT DISCHARGE (TONS/DAY)	MEAN DISCHARGE (CFS)	MEAN CONCEN-TRATION (MG/L)	SEDIMENT DISCHARGE (TONS/DAY)	MEAN DISCHARGE (CFS)	MEAN CONCEN-TRATION (MG/L)	SEDIMENT DISCHARGE (TONS/DAY)
1	6.0	40	.65	3.4	60	.55	10	30	.81
2	6.0	40	.65	5.1	80	1.1	8.1	20	.44
3	6.0	35	.57	4.2	75	.85	7.0	15	.28
4	5.1	35	.48	3.4	70	.64	5.1	20	.28
5	5.1	35	.48	3.4	70	.64	6.0	25	.41
6	5.1	30	.41	3.4	60	.55	7.0	20	.38
7	5.1	30	.41	2.7	50	.36	6.0	20	.32
8	7.0	40	.76	2.7	40	.29	5.1	25	.34
9	7.0	40	.76	2.7	35	.26	8.1	30	.66
10	6.0	35	.57	1.6	30	.13	10	35	.95
11	6.0	35	.57	2.7	25	.18	13	40	1.4
12	6.0	30	.49	2.7	25	.18	10	35	.95
13	6.0	30	.49	2.1	20	.11	9.3	30	.75
14	6.0	30	.49	3.4	30	.28	9.3	30	.75
15	6.0	35	.57	5.1	35	.48	10	35	.95
16	7.0	40	.76	5.1	30	.41	10	35	.95
17	6.0	40	.65	6.0	35	.57	10	30	.81
18	4.2	35	.40	6.0	35	.57	9.3	25	.63
19	5.1	35	.48	6.0	40	.65	8.1	20	.44
20	5.1	40	.55	7.0	45	.85	9.3	25	.63
21	5.1	40	.55	8.1	50	1.1	9.3	25	.63
22	4.2	45	.51	9.3	55	1.4	9.3	20	.50
23	4.2	45	.51	8.1	50	1.1	8.0	20	.43
24	3.4	50	.46	6.0	45	.73	7.0	15	.28
25	3.4	50	.46	4.2	40	.45	6.0	15	.24
26	2.7	55	.40	4.2	35	.40	5.1	15	.21
27	3.4	60	.55	6.0	40	.65	6.0	10	.16
28	5.1	65	.90	5.1	40	.55	6.0	10	.16
29	5.1	65	.90	8.1	45	.98	7.0	10	.19
30	4.2	60	.68	8.1	35	.77	7.0	10	.19
31	3.4	55	.50	10	40	1.1	---	---	---
TOTAL	160.0	---	17.61	155.9	---	18.88	241.4	---	16.12
YEAR	5777.5		81019.53						

11106550 CALLEGUAS CREEK AT CAMARILLO STTE HOSPITAL, CALIF.--Continued

PARTICLE-SIZE DISTRIBUTION OF SUSPENDED SEDIMENT, WATER YEAR OCTOBER 1974 TO SEPTEMBER 1975

DATE	TIME	TEMPER-ATURE (DEG C)	INSTAN-TANEOUS DIS-CHARGE (CFS)	SUS-PENDED SEDI-MENT (MG/L)	SUS-PENDED SEDI-MENT DIS-CHARGE (T/DAY)	SUS. SED. FALL DIAM. % FINER THAN .002 MM	SUS. SED. FALL DIAM. % FINER THAN .004 MM	SUS. SED. FALL DIAM. % FINER THAN .008 MM	SUS. SED. FALL DIAM. % FINER THAN .016 MM
DEC.									
04...	0750	12.5	1220	20500	67500	26	27	35	44
FEB.									
01...	1300	12.5	10	94	2.5	--	--	--	--
MAR.									
07...	0730	13.0	189	2260	1150	45	53	64	72

DATE	SUS. SED. FALL DIAM. % FINER THAN .031 MM	SUS. SED. FALL DIAM. % FINER THAN .062 MM	SUS. SED. SIEVE DIAM. % FINER THAN .062 MM	SUS. SED. FALL DIAM. % FINER THAN .125 MM	SUS. SED. SIEVE DIAM. % FINER THAN .125 MM	SUS. SED. FALL DIAM. % FINER THAN .250 MM	SUS. SED. SIEVE DIAM. % FINER THAN .250 MM	SUS. SED. FALL DIAM. % FINER THAN .500 MM	SUS. SED. SIEVE DIAM. % FINER THAN .500 MM
DEC.									
04...	56	75	--	91	--	98	--	100	--
FEB.									
01...	--	--	94	--	95	--	96	--	100
MAR.									
07...	83	85	--	94	--	99	--	100	--

PARTICLE-SIZE DISTRIBUTION OF SURFACE BED MATERIAL, WATER YEAR OCTOBER 1974 TO SEPTEMBER 1975

DATE	TIME	TEMPER-ATURE (DEG C)	NUMBER OF SAM-PLING POINTS	INSTAN-TANEOUS DIS-CHARGE (CFS)	BED MAT. SIEVE DIAM. % FINER THAN .125 MM	BED MAT. SIEVE DIAM. % FINER THAN .250 MM	BED MAT. SIEVE DIAM. % FINER THAN .500 MM	BED MAT. SIEVE DIAM. % FINER THAN 1.00 MM	BED MAT. SIEVE DIAM. % FINER THAN 2.00 MM	BED MAT. SIEVE DIAM. % FINER THAN 4.00 MM	BED MAT. SIEVE DIAM. % FINER THAN 8.00 MM
APR.											
30...	1400	24.0	3	9.3	1	12	50	86	97	99	100
SEP.											
30...	1430	22.5	3	10	1	10	47	92	99	100	--

11107745 SANTA CLARA RIVER ABOVE RAILROAD STATION, NEAR LANG, CALIF.

LOCATION.--Lat 34°25'52", long 118°21'22", in SE¼SW¼NW¼ sec.16, T.4 N., R.14 W., Los Angeles County, on downstream side of railroad bridge, 1.1 mi (1.8 km) east of Lang Railroad Station, 1.9 mi (3.1 km) downstream from Aqua Dulce Canyon, and 5.2 mi (8.4 km) northeast of Solemint.

DRAINAGE AREA.--157 mi^2 (407 km^2).

PERIOD OF RECORD.--October 1949 to September 1968, October 1969 to current year. Monthly discharge only for 1950-70 published in 1971 report. Daily discharge available in historical computer files.

GAGE.--Water-stage recorder. Altitude of gage is 1,750 ft (533 m), from topographic map. Prior to Apr. 3, 1970, at site 0.4 mi (0.6 km) downstream at different datum.

AVERAGE DISCHARGE.--25 years (1949-69, 1970-75), 4.84 ft^3/s (0.137 m^3/s), 3,510 acre-ft/yr (4.33 hm^3/yr).

EXTREMES.--Current year: Maximum discharge, 59 ft^3/s (1.67 m^3/s) Dec. 4 (gage height, 2.53 ft or 0.771 m); no flow many days.
Period of record: Maximum discharge, 5,910 ft^3/s (167 m^3/s), estimated, Feb. 25, 1969; no flow at times in some years.

REMARKS.--Records fair. No regulation above station. Small diversions for irrigation and recreation.

COOPERATION.--Records furnished by Los Angeles County Flood Control District.

DISCHARGE, IN CUBIC FEET PER SECOND, WATER YEAR OCTOBER 1974 TO SEPTEMBER 1975
MEAN VALUES

DAY	OCT	NOV	DEC	JAN	FEB	MAR	APR	MAY	JUN	JUL	AUG	SEP
1	0	.10	.30	1.0	.90	.90	1.0	2.7	.70	.40	.10	
2	0	.20	.20	.90	1.7	1.0	1.2	2.9	.60	.40	.10	
3	0	.30	.30	.80	4.4	1.9	1.4	2.7	.60	.40	.10	
4	0	.30	12	.80	3.3	2.2	1.6	2.2	.50	.40	.10	
5	0	.40	1.8	.80	2.3	2.3	2.7	2.7	.50	.40	.10	
6	0	.50	1.7	.80	2.2	13	3.5	2.7	.70	.40	.10	
7	0	.50	1.6	.80	2.0	8.8	3.3	2.5	.60	.40	.10	
8	.10	.50	1.5	.80	1.8	11	2.9	2.2	.50	.40	.10	
9	.10	.50	1.4	.90	2.0	6.9	4.6	2.2	.50	.40	.10	
10	.10	.50	1.4	.90	1.8	5.8	4.2	2.2	.50	.40	.10	
11	.10	.40	1.3	.80	1.6	5.1	4.6	2.3	.50	.30	.10	
12	0	.40	1.3	.90	1.4	4.6	4.4	3.1	.50	.30	.10	
13	.10	.40	1.2	.90	1.6	4.4	4.0	4.0	.40	.30	.10	
14	0	.30	1.2	.80	1.6	4.4	3.8	1.4	.40	.30	0	
15	0	.30	1.0	.80	1.6	3.8	4.4	1.1	.50	.30	0	
16	0	.30	.80	.70	1.6	3.1	4.0	1.0	.50	.30	0	
17	0	.30	.80	.60	1.4	2.9	3.5	1.0	.50	.20	0	
18	0	.20	.70	.70	1.2	2.9	3.1	1.0	.50	.20	0	
19	0	.20	.70	.70	1.4	2.9	3.1	.90	.60	.20	0	
20	0	.20	.80	.70	1.2	2.7	2.9	1.1	.60	.10	0	
21	0	.20	.80	.80	1.2	2.7	3.3	1.2	.60	.10	0	
22	0	.30	.90	.80	1.2	2.9	3.8	1.2	.60	.10	0	
23	.10	.30	.90	.90	1.1	2.7	1.2	1.1	.50	.10	0	
24	.10	.20	.90	.90	1.1	2.7	2.2	1.0	.50	.10	0	
25	.10	.20	.90	1.0	1.0	2.7	2.5	1.1	.50	.10	0	
26	.10	.30	1.0	1.0	.90	2.7	2.7	1.0	.50	.10	0	
27	.10	.30	.80	1.0	.90	2.3	2.7	1.0	.40	.10	0	
28	.10	.40	1.8	1.0	.90	2.0	2.9	.90	.50	.10	0	
29	.10	.40	1.6	1.0	---	1.6	2.9	.80	.50	.10	0	
30	.10	.40	1.1	1.0	---	1.0	2.7	.70	.40	.10	0	
31	.10	---	1.0	1.0	---	.90	---	.70	---	.10	0	---
TOTAL	1.40	9.80	43.70	26.50	45.30	114.80	91.1	52.60	15.70	7.60	1.30	0
MEAN	.045	.33	1.41	.85	1.62	3.70	3.04	1.70	.52	.25	.042	0
MAX	.10	.50	12	1.0	4.4	13	4.6	4.0	.70	.40	.10	0
MIN	0	.10	.20	.60	.90	.90	1.0	.70	.40	.10	0	0
AC-FT	2.8	19	87	53	90	228	181	104	31	15	2.6	0

CAL YR 1974 TOTAL 871.31 MEAN 2.39 MAX 70 MIN 0 AC-FT 1730
WTR YR 1975 TOTAL 409.80 MEAN 1.12 MAX 13 MIN 0 AC-FT 813

11107860 BOUQUET CREEK NEAR SAUGUS, CALIF.

LOCATION.--Lat 34°26'56", long 118°30'22", in NE¼SW¼NE¼ sec.12, T.4 N., R.16 W., Los Angeles County, on left bank 50 ft (15 m) upstream from Urbandale Avenue bridge, 0.3 mi (0.5 km) upstream from Haskell Canyon, and 3.2 mi (5.1 km) northeast of Saugus.

DRAINAGE AREA.--51.6 mi^2 (133.6 km^2).

PERIOD OF RECORD.--October 1970 to current year.

GAGE.--Water-stage recorder. Altitude of gage is 1,305 ft (398 m), from topographic map.

AVERAGE DISCHARGE.--5 years, 0.61 ft^3/s (0.017 m^3/s), 442 acre-ft/yr (545,000 m^3/yr).

EXTREMES.--Current year: Maximum discharge, 516 ft^3/s (14.6 m^3/s) Mar. 5 (gage height, 2.49 ft or 0.759 m); no flow for long periods.
Period of record: Maximum discharge, 750 ft^3/s (21.2 m^3/s) Feb. 11, 1973 (gage height, 3.04 ft or 0.927 m); no flow at times in each year.

REMARKS.--Records poor. Partial regulation by Bouquet Reservoir, capacity, 36,500 acre-ft (45.0 hm^3), principally used as equalizing reservoir to city of Los Angeles aqueduct. Some pumping by wells for irrigation.

COOPERATION.--Records furnished by Los Angeles County Flood Control District.

DISCHARGE, IN CUBIC FEET PER SECOND, WATER YEAR OCTOBER 1974 TO SEPTEMBER 1975
MEAN VALUES

DAY	OCT	NOV	DEC	JAN	FEB	MAR	APR	MAY	JUN	JUL	AUG	SEP
1	0		0		0	0						
2	0		0		.17	0						
3	0		0		.85	0						
4	0		7.0		.04	0						
5	0		0		0	11						
6	0		0		0	9.7						
7	.36		0		0	.05						
8	0		0		0	7.8						
9	0		0		.05	0						
10	0		0		.04	.27						
11	0		0		0	0						
12	0		0		0	0						
13	0		0		0	.03						
14	0		0		0	.03						
15	0		0		0	0						
16	0		0		0	0						
17	0		0		0	0						
18	0		0		0	0						
19	0		0		0	0						
20	0		0		0	0						
21	0		0		0	0						
22	0		0		0	0						
23	0		0		0	0						
24	0		0		0	0						
25	0		0		0	0						
26	0		0		0	0						
27	0		0		0	0						
28	0		.61		0	0						
29	0		.06		---	0						
30	0		0		---	0						
31	0	---	0		---	0	---		---			---
TOTAL	.36	0	7.67	0	1.15	28.88	0	0	0	0	0	0
MEAN	.012	0	.25	0	.041	.93	0	0	0	0	0	0
MAX	.36	0	7.0	0	.85	11	0	0	0	0	0	0
MIN	0	0	0	0	0	0	0	0	0	0	0	0
AC-FT	.7	0	15	0	2.3	57	0	0	0	0	0	0

CAL YR 1974 TOTAL 24.57 MEAN .067 MAX 8.4 MIN 0 AC-FT 49
WTR YR 1975 TOTAL 38.06 MEAN .10 MAX 11 MIN 0 AC-FT 75

11108145 CASTAIC CREEK NEAR SAUGUS, CALIF.

LOCATION.--Lat 34°25'42", long 118°37'40", in San Francisco Grant, Los Angeles County, on downstream side of bridge on State Highway 126, 0.6 mi (1.0 km) upstream from mouth, 4.6 mi (7.4 km) southwest of Castaic, and 5.1 mi (8.2 km) northwest of Saugus.

DRAINAGE AREA.--202 mi^2 (523 km^2).

PERIOD OF RECORD.--December 1945 to current year. Monthly discharge only for 1947-70 published in WRD Calif., 1971. Daily discharge available in historical computer files.

GAGE.--Water-stage recorder. Datum of gage is 952.05 ft (290.185 m) above mean sea level (levels by Los Angeles County Flood Control District).

AVERAGE DISCHARGE.--29 years (1946-75), 11.8 ft^3/s (0.334 m^3/s), 8,550 acre-ft/yr (10.5 hm^3/yr).

EXTREMES.--Current year: Maximum discharge, 232 ft^3/s (6.57 m^3/s) Dec. 4 (gage height, 3.29 ft or 1.003 m); no flow Oct. 1-6, Aug. 15 to Sept. 30.
Period of record: Maximum discharge, 19,300 ft^3/s (547 m^3/s) Feb. 25, 1969, result of slope-area measurement of maximum flow; no flow for all or long periods in each year.

REMARKS.--Records poor. Flow regulated beginning in 1972 by Castaic Reservoir, capacity, 350,000 acre-ft (432 hm^3). Imported water from California Water Project stored and released at Castaic Dam.

COOPERATION.--Records furnished by Los Angeles County Flood Control District.

DISCHARGE, IN CUBIC FEET PER SECOND, WATER YEAR OCTOBER 1974 TO SEPTEMBER 1975
MEAN VALUES

DAY	OCT	NOV	DEC	JAN	FEB	MAR	APR	MAY	JUN	JUL	AUG	SEP
1	0	1.0	1.1	2.8	2.4	3.5	3.3	2.6	10	6.1	.20	
2	0	1.1	1.1	2.6	7.3	3.5	3.3	2.2	10	4.1	.10	
3	0	.90	1.2	2.5	36	3.7	3.5	2.4	11	3.5	.10	
4	0	.90	36	2.5	4.9	3.7	3.1	2.4	11	3.5	.10	
5	0	.90	2.9	2.5	4.1	4.1	5.8	2.4	11	3.0	.10	
6	0	.90	2.2	2.4	3.9	15	6.6	2.2	11	2.6	.10	
7	6.1	.90	2.1	2.4	3.9	4.5	6.1	2.2	11	2.2	.10	
8	3.9	.90	2.1	2.5	3.9	21	5.5	2.1	12	1.8	.10	
9	2.6	1.0	2.1	2.4	5.5	3.5	4.7	2.0	45	1.4	.10	
10	2.4	1.1	2.1	2.6	5.8	2.8	4.3	1.9	88	1.0	.10	
11	2.2	1.2	2.2	2.5	4.3	2.5	3.9	1.5	5.9	.60	.10	
12	2.1	1.1	2.2	2.6	3.9	2.4	3.9	1.2	3.3	.60	.10	
13	2.0	1.1	2.1	2.9	3.7	2.4	3.5	1.0	3.7	.70	.10	
14	1.7	1.4	2.1	2.6	3.9	2.6	3.3	.80	3.9	.60	.10	
15	1.6	1.1	2.1	2.5	3.7	2.4	3.7	.70	4.1	.60	0	
16	1.6	1.1	2.1	2.5	3.5	2.5	3.5	.60	4.9	.50	0	
17	1.4	1.1	2.1	2.1	3.3	2.5	3.1	2.9	4.9	.40	0	
18	1.4	1.1	2.1	2.1	3.3	2.6	2.9	6.1	5.2	.40	0	
19	1.3	1.1	2.2	2.0	3.5	2.8	2.8	9.0	6.1	.40	0	
20	1.2	1.1	2.2	2.1	3.5	2.9	2.9	15	6.9	.40	0	
21	1.1	1.1	2.2	2.1	3.5	2.9	3.1	7.5	7.2	.40	0	
22	1.0	1.0	2.2	2.0	3.3	3.9	2.9	10	7.5	.40	0	
23	1.0	1.0	2.2	2.0	3.3	3.5	2.9	12	7.8	.30	0	
24	1.0	1.0	2.2	2.4	3.3	3.1	2.9	12	8.8	.30	0	
25	1.0	1.0	2.2	2.1	3.7	3.1	3.1	12	8.0	.30	0	
26	1.0	1.0	2.2	2.1	3.1	3.1	2.6	11	7.2	.30	0	
27	1.0	1.0	5.8	2.2	3.3	3.1	2.6	11	6.3	.60	0	
28	1.0	1.1	24	2.1	3.3	3.1	2.5	12	5.5	.70	0	
29	1.0	1.1	6.6	2.1	---	3.1	2.5	12	6.4	.30	0	
30	.90	1.1	3.1	2.1	---	3.1	2.6	9.0	6.6	.20	0	
31	.90	---	2.8	2.2	---	3.3	---	10	---	.20	0	---
TOTAL	42.40	31.40	129.8	72.5	141.1	126.2	107.4	179.70	340.2	38.40	1.50	0
MEAN	1.37	1.05	4.19	2.34	5.04	4.07	3.58	5.80	11.3	1.24	.048	0
MAX	6.1	1.4	36	2.9	36	21	6.6	15	88	6.1	.20	0
MIN	0	.90	1.1	2.0	2.4	2.4	2.5	.60	3.3	.20	0	0
AC-FT	84	62	257	144	280	250	213	356	675	76	3.0	0

CAL YR 1974 TOTAL 3674.40 MEAN 10.1 MAX 474 MIN 0 AC-FT 7290
WTR YR 1975 TOTAL 1210.60 MEAN 3.32 MAX 88 MIN 0 AC-FT 2400

11108500 SANTA CLARA RIVER AT LOS ANGELES-VENTURA COUNTY LINE, CALIF.

LOCATION.--Lat 34°23'59", long 118°42'14", in San Francisco Grant, Ventura County, on downstream end of old diversion weir on right bank, 0.8 mi (1.3 km) west of Los Angeles-Ventura County line.

DRAINAGE AREA.--644 mi^2 (1,668 km^2).

PERIOD OF RECORD.--October 1952 to current year.

GAGE.--Water-stage recorder. Datum of gage is 794.93 ft (242.295 m) above mean sea level.

AVERAGE DISCHARGE.--23 years, 36.7 ft^3/s (1.039 m^3/s), 26,590 acre-ft/yr (32.8 hm^3/yr).

EXTREMES.--Current year: Maximum discharge, 2,210 ft^3/s (62.6 m^3/s) Dec. 4 (gage height, 5.87 ft or 1.789 m); minimum daily, 7.6 ft^3/s (0.22 m^3/s) Aug. 26.
Period of record: Maximum discharge, 68,800 ft^3/s (1,950 m^3/s) Jan. 25, 1969 (gage height. 19.01 ft or 5.794 m), from rating curve extended above 9,200 ft^3/s (261 m^3/s) on basis of field estimate of maximum flow; no flow at times in some years.

REMARKS.--Records poor. Base flow affected by pumping from wells along stream for irrigation. Flow partly regulated since January 1972 by Castaic Reservoir, capacity, 324,000 acre-ft (399 hm^3). Imported water from California Water Project stored and released at Castaic Dam.

DISCHARGE, IN CUBIC FEET PER SECOND, WATER YEAR OCTOBER 1974 TO SEPTEMBER 1975
MEAN VALUES

DAY	OCT	NOV	DEC	JAN	FEB	MAR	APR	MAY	JUN	JUL	AUG	SEP
1	12	20	13	21	16	17	25	18	17	14	12	9.5
2	11	20	14	20	28	16	25	18	18	12	10	9.7
3	10	20	15	20	196	16	25	19	20	12	9.1	9.9
4	12	20	243	20	35	16	26	20	22	12	9.8	10
5	14	20	25	20	28	28	39	19	19	12	9.5	10
6	14	19	18	20	26	428	25	18	19	11	10	10
7	45	18	45	20	26	116	26	19	20	11	11	11
8	24	17	52	21	28	379	27	18	23	11	10	11
9	17	17	21	20	41	50	50	18	46	12	9.3	12
10	18	17	20	21	41	38	28	18	128	12	10	12
11	19	15	21	21	32	50	31	19	24	11	11	12
12	18	15	21	21	31	31	31	17	15	10	11	10
13	18	16	20	21	31	28	32	16	11	12	9.4	10
14	19	15	20	21	32	25	33	16	10	9.6	9.3	11
15	18	14	20	20	31	31	35	16	12	11	8.7	11
16	16	14	19	18	30	27	33	16	13	11	8.6	11
17	16	14	19	17	29	17	31	16	14	13	9.1	11
18	16	14	19	16	29	16	30	16	14	13	9.1	11
19	16	14	20	15	27	16	29	20	15	12	9.5	11
20	16	13	20	15	28	15	29	26	15	10	8.1	11
21	16	13	21	16	25	15	29	25	10	10	10	11
22	15	13	21	15	24	19	28	21	11	11	13	11
23	16	13	20	14	25	17	28	19	12	10	19	11
24	15	12	21	18	25	17	28	20	13	10	13	10
25	16	12	22	15	24	19	30	20	13	10	8.7	10
26	16	13	22	15	22	18	28	21	12	10	7.6	9.8
27	16	13	22	17	21	20	28	21	11	10	8.5	9.6
28	17	14	69	17	19	21	29	18	11	9.9	8.7	9.2
29	18	13	46	17	---	22	28	17	12	9.8	8.9	9.9
30	17	13	23	17	---	24	22	15	12	10	9.1	10
31	18	---	20	17	---	25	---	17	---	10	9.3	---
TOTAL	529	461	972	566	950	1577	888	577	592	342.3	310.3	315.6
MEAN	17.1	15.4	31.4	18.3	33.9	50.9	29.6	18.6	19.7	11.0	10.0	10.5
MAX	45	20	243	21	196	428	50	26	128	14	19	12
MIN	10	12	13	14	16	15	22	15	10	9.6	7.6	9.2
AC-FT	1050	914	1930	1120	1880	3130	1760	1140	1170	679	615	626

CAL YR 1974 TOTAL 12737.8 MEAN 34.9 MAX 2080 MIN 4.9 AC-FT 25270
WTR YR 1975 TOTAL 8080.2 MEAN 22.1 MAX 428 MIN 7.6 AC-FT 16030

Peak discharge (base, 750 ft^3/s)

Date	Time	G.H.	Discharge	Date	Time	G.H.	Discharge
12-4	0800	5.87	2,210	3-8	1300	4.94	1,500
3-6	0200	4.96	1,510				

11108500 SANTA CLARA RIVER AT LOS ANGELES-VENTURA COUNTY LINE, CALIF.--Continued

PERIOD OF RECORD.--Chemical analyses: October 1971 to current year (partial-record station).
Chloride: June to September 1969.
Specific conductance: June to September 1969, October 1970 to current year.
pH: June to September 1969.
Water temperatures: October 1968 to current year.
Sediment records: October 1968 to current year.

EXTREMES.--Current year:
Specific conductance: Maximum recorded, 1,950 micromhos July 19; minimum recorded, 763 micromhos Dec. 28.
Sediment concentrations: Maximum daily, 5,970 mg/l Mar. 8; minimum daily, 20 mg/l on several days during August and September.
Sediment discharge: Maximum daily, 9,840 tons (8,920 tonnes) Mar. 8; minimum daily, 0.46 ton (0.42 tonnes) Aug. 27.
Period of record:
Specific conductance: Maximum, 3,600 micromhos Mar. 31, 1971; minimum recorded, 665 micromhos Jan. 18, 1973.
Sediment concentrations: Maximum daily, 27,400 mg/l Nov. 29, 1970; minimum daily, 10 mg/l on several days in 1972.
Sediment discharge: Maximum daily, 3,300,000 tons (2,990,000 tonnes), estimated, Feb. 25, 1969; minimum daily, 0.05 ton (0.05 tonne) Jan. 7, 1969.

REMARKS.--The letter "A" following a date indicates chemical-quality data furnished by California Department of Water Resources. Miscellaneous samples of chemical data published for water year 1969. Missing specific conductance data due to probe or recorder malfunction.

WATER QUALITY DATA, WATER YEAR OCTOBER 1974 TO SEPTEMBER 1975

DATE	TIME	INSTANTANEOUS DISCHARGE (CFS)	TOTAL MANGANESE (MN) (UG/L)	DISSOLVED CALCIUM (CA) (MG/L)	DISSOLVED MAGNESIUM (MG) (MG/L)	DISSOLVED SODIUM (NA) (MG/L)	DISSOLVED POTASSIUM (K) (MG/L)	BICARBONATE (HCO3) (MG/L)	CARBONATE (CO3) (MG/L)	ALKALINITY AS CACO3 (MG/L)	DISSOLVED SULFATE (SO4) (MG/L)	DISSOLVED CHLORIDE (CL) (MG/L)
OCT.												
16...	1600	16	120	--	--	--	--	--	--	--	--	--
NOV.												
18...	1440	13	130	--	--	--	--	--	--	--	--	--
DEC.												
19...	1510	20	120	--	--	--	--	--	--	--	--	--
JAN.												
17...	0830	17	140	170	60	140	6.0	360	0	295	510	91
FEB.												
10...	1600	45	470	150	51	130	6.3	322	0	264	470	73
MAR.												
07...	1645	90	140	170	54	130	6.5	345	0	283	500	82
APR.												
16...	1120	33	130	170	58	130	5.7	365	0	299	500	76
MAY												
22...	1300	22	280	150	54	120	6.5	336	0	276	420	78
JUNE												
25...	1045	16	310	150	50	130	6.2	336	0	276	470	79
AUG.												
28...	1210	8.5	90	160	57	150	6.3	363	--	298	550	85
SEP.												
16...	1345	11	180	170	57	140	5.8	369	0	303	530	81

DATE	DISSOLVED FLUORIDE (F) (MG/L)	TOTAL NITRITE PLUS NITRATE (N) (MG/L)	AMMONIA NITROGEN (N) (MG/L)	TOTAL ORGANIC NITROGEN (N) (MG/L)	TOTAL KJELDAHL NITROGEN (N) (MG/L)	TOTAL NITROGEN (N) (MG/L)	TOTAL PHOSPHORUS (P) (MG/L)	DISSOLVED SOLIDS (RESIDUE AT 180 C) (MG/L)	DISSOLVED SOLIDS (TONS PER AC-FT)	DISSOLVED SOLIDS (TONS PER DAY)	HARDNESS (CA,MG) (MG/L)	NONCARBONATE HARDNESS (MG/L)
OCT.												
16...	--	.00	.22	.58	.80	.80	1.0	1220	1.66	52.7	--	--
NOV.												
18...	--	.00	.06	.50	.56	.56	.79	1270	1.73	44.6	--	--
DEC.												
19...	--	.02	.12	.52	.64	.66	.80	1250	1.70	67.5	--	--
JAN.												
17...	.6	3.7	.72	.58	1.3	5.0	.86	1260	1.71	57.8	670	380
FEB.												
10...	.6	.00	.06	2.1	2.2	2.2	1.6	1130	1.54	137	580	320
MAR.												
07...	.5	2.7	.24	.59	.83	3.5	.63	1210	1.65	294	650	360
APR.												
16...	.7	.00	.08	.52	.60	.60	.81	1260	1.71	112	660	360
MAY												
22...	.7	2.5	.04	.96	1.0	3.5	.23	1160	1.58	68.9	600	320
JUNE												
25...	.6	2.7	.03	.97	1.0	3.7	.88	1170	1.59	50.5	580	300
AUG.												
28...	.7	3.2	.03	.78	.81	4.0	.90	1310	1.78	30.1	630	340
SEP.												
16...	.7	2.8	.06	.74	.80	3.6	1.1	1260	1.71	37.4	660	360

11108500 SANTA CLARA RIVER AT LOS ANGELES-VENTURA COUNTY LINE, CALIF.--Continued

WATER QUALITY DATA, WATER YEAR OCTOBER 1974 TO SEPTEMBER 1975

DATE	PERCENT SODIUM	SODIUM ADSORPTION RATIO	SPECIFIC CONDUCTANCE (MICROMHOS)	PH (UNITS)	TEMPERATURE (DEG C)	TURBIDITY (JTU)	CHEMICAL OXYGEN DEMAND (HIGH LEVEL) (MG/L)	TOTAL ORGANIC CARBON (C) (MG/L)	CYANIDE (CN) (MG/L)	METHYLENE BLUE ACTIVE SUBSTANCE (MG/L)	TOTAL SELENIUM (SE) (UG/L)
OCT.											
16...	--	--	1630	8.2	25.0	7	15	6.0	.00	.0	2
NOV.											
18...	--	--	1650	8.4	18.5	2	9	3.8	.00	.0	2
DEC.											
19...	--	--	1670	8.2	16.5	6	13	3.8	.00	.2	4
JAN.											
17...	31	2.4	1700	8.0	9.5	6	13	3.9	.00	.1	3
FEB.											
10...	32	2.3	1550	8.0	18.2	10	70	21	.00	.0	3
MAR.											
07...	30	2.2	1650	--	--	60	21	7.7	.00	.0	5
APR.											
16...	30	2.2	1650	7.0	17.7	18	20	3.7	.00	.1	5
MAY											
22...	30	2.1	1600	8.5	23.0	40	13	7.8	.02	.0	3
JUNE											
25...	32	2.3	1600	8.3	23.5	66	25	8.7	.00	.0	3
AUG.											
28...	34	2.6	1720	8.0	24.5	6	27	4.8	--	.6	3
SEP.											
16...	31	2.4	1650	8.0	27.0	10	21	4.6	--	--	4

DATE	TIME	INSTANTANEOUS DISCHARGE (CFS)	DISSOLVED IRON (FE) (UG/L)	DISSOLVED SULFATE (SO4) (MG/L)	DISSOLVED CHLORIDE (CL) (MG/L)	DISSOLVED SOLIDS (RESIDUE AT 180 C) (MG/L)	DISSOLVED SOLIDS (TONS PER AC-FT)	HARDNESS (CA,MG) (MG/L)	SPECIFIC CONDUCTANCE (MICROMHOS)	PH (UNITS)
NOV.										
19...A	1330	13	--	520	83	1298	1.77	661	1530	8.2
JAN.										
21...A	1330	16	--	518	80	1287	1.75	666	1475	8.2
APR.										
22...A	1230	28	--	515	78	1229	1.67	664	1475	8.2
MAY										
21...A	1245	19	10	--	--	--	--	--	--	--
JULY										
22...A	1220	10	--	535	82	1330	1.81	664	1600	8.2

DATE	TEMPERATURE (DEG C)	TURBIDITY (JTU)	DISSOLVED OXYGEN (MG/L)	DISSOLVED ARSENIC (AS) (UG/L)	DISSOLVED CADMIUM (CD) (UG/L)	DISSOLVED COPPER (CU) (UG/L)	DISSOLVED LEAD (PB) (UG/L)	TOTAL MERCURY (HG) (UG/L)	DISSOLVED ZINC (ZN) (UG/L)
NOV.									
19...	18.5	13	9.9	--	--	--	--	--	--
JAN.									
21...	18.0	5	10.0	--	--	--	--	--	--
APR.									
22...	16.5	5	10.1	--	--	--	--	--	--
MAY									
21...	24.0	--	--	0	0	0	0	.1	10
JULY									
22...	29.0	44	8.4	--	--	--	--	--	--

11108500 SANTA CLARA RIVER AT LOS ANGELES-VENTURA COUNTY LINE, CALIF.--Continued

WATER QUALITY DATA, WATER YEAR OCTOBER 1974 TO SEPTEMBER 1975

DATE	TIME	INSTANTANEOUS DISCHARGE (CFS)	TOTAL ALDRIN (UG/L)	TOTAL CHLORDANE (UG/L)	TOTAL DDD (UG/L)	TOTAL DDE (UG/L)	TOTAL DDT (UG/L)	TOTAL DIAZINON (UG/L)	TOTAL DIELDRIN (UG/L)	TOTAL ENDRIN (UG/L)	TOTAL ETHION (UG/L)	TOTAL HEPTACHLOR (UG/L)
DEC.												
19...	1510	20	.00	.0	.00	.00	.00	.00	.00	.00	.00	.00
JAN.												
17...	0830	17	.00	.0	.00	.00	.00	.01	.00	.00	.00	.00
FEB.												
10...	1600	45	.00	.1	.00	.01	.03	.02	.01	.00	.00	.00
MAR.												
17...	1630	17	.00	<.0	.00	.00	<.01	.01	.00	.00	.00	.00
SEP.												
16...	1345	11	.00	.0	.01	.01	.01	.05	.00	.00	--	.00

DATE	TOTAL HEPTACHLOR EPOXIDE (UG/L)	TOTAL LINDANE (UG/L)	TOTAL MALATHION (UG/L)	TOTAL METHYL PARATHION (UG/L)	TOTAL METHYL TRITHION (UG/L)	TOTAL PARATHION (UG/L)	TOTAL PCB (UG/L)	TOTAL TOXAPHENE (UG/L)	TOTAL TRITHION (UG/L)	TOTAL 2,4-D (UG/L)	TOTAL 2,4,5-T (UG/L)	TOTAL SILVEX (UG/L)
DEC.												
19...	.00	.00	.00	.00	.00	.00	.0	0	.00	.00	.00	.00
JAN.												
17...	.00	.00	.00	.00	.00	.00	.0	0	.00	.00	.03	.00
FEB.												
10...	.00	.00	.00	.00	.00	.00	.0	0	.00	.02	.01	.00
MAR.												
17...	.00	.00	.00	.00	.00	.00	.0	0	.00	.00	.00	.00
SEP.												
16...	.00	.41	.00	.00	--	.00	.0	0	--	.00	.00	.00

DATE	TIME	TOTAL IRON (FE) (UG/L)	TOTAL ARSENIC (AS) (UG/L)	DISSOLVED BORON (B) (UG/L)	TOTAL CADMIUM (CD) (UG/L)	TOTAL CHROMIUM (CR) (UG/L)	TOTAL LEAD (PB) (UG/L)	TOTAL MERCURY (HG) (UG/L)
OCT.								
16...	1600	1600	3	--	<10	0	<100	.0
NOV.								
18...	1440	1700	4	--	<10	<10	100	.0
DEC.								
19...	1510	1500	3	--	<10	0	<100	<.1
JAN.								
17...	0830	950	1	650	10	10	<100	.0
FEB.								
10...	1600	25000	10	610	10	40	<100	.6
MAR.								
07...	1645	4600	3	620	<10	10	<100	.2
APR.								
16...	1120	2900	3	570	<10	0	<100	.1
MAY								
22...	1300	12000	3	620	<10	20	<100	.0
JUNE								
25...	1045	16000	5	670	<10	0	<100	.1
AUG.								
28...	1210	930	4	770	<10	10	<100	.0
SEP.								
16...	1345	2500	3	830	0	10	<100	.1

11108500 SANTA CLARA RIVER AT LOS ANGELES-VENTURA COUNTY LINE, CALIF.--Continued

SPECIFIC CONDUCTANCE (MICROMHOS/CM AT 25 DEG. C), WATER YEAR OCTOBER 1974 TO SEPTEMBER 1975

	OCTOBER			NOVEMBER			DECEMBER			JANUARY		
DAY	MAX	MIN	MEAN	MAX	MIN	MEAN	MAX	MIN	MEAN	MAX	MIN	MEAN
1	1670	1600	1620	1630	1560	1590	1750	1670	1710	1640	1530	1570
2	1640	1580	1620	1630	1560	1590	1780	1680	1730	1630	1520	1560
3	1650	1590	1620	1620	1550	1580	1750	1680	1720	1640	1530	1580
4	1640	1580	1610	1620	1540	1570	---	---	---	1650	1520	1580
5	1630	1580	1600	1620	1540	1580	1750	1170	1640	1650	1550	1590
6	1650	1580	1610	1640	1550	1590	1780	1680	1730	1640	1540	1570
7	1630	1320	1520	1640	1560	1600	1710	956	1330	1650	1590	1610
8	1660	1470	1630	1650	1550	1600	1630	972	1440	1710	1650	1670
9	1690	1650	1670	1650	1560	1600	1710	1620	1670	1700	1630	1650
10	1700	1650	1670	1670	1580	1620	1720	1630	1670	1720	1620	1660
11	1670	1640	1650	1670	1600	1630	1720	1640	1670	1720	1640	1670
12	1690	1630	1660	1650	1580	1620	1720	1650	1680	1730	1640	1670
13	1650	1620	1640	1640	1580	1610	1690	1620	1660	1730	1620	1670
14	1640	1610	1630	1660	1600	1630	1720	1620	1660	1740	1630	1680
15	1630	1600	1620	1670	1610	1630	1710	1650	1670	1760	1640	1690
16	1640	1600	1620	1680	1620	1640	1700	1610	1660	1760	1660	1700
17	1650	1590	1620	1690	1600	1640	1670	1600	1630	1750	1660	1700
18	1670	1620	1640	1680	1590	1630	1680	1600	1640	1770	1660	1710
19	1650	1620	1630	1730	1660	1690	1670	1590	1620	1780	1680	1720
20	1660	1620	1640	1740	1660	1690	1670	1590	1620	1770	1670	1720
21	1650	1620	1630	1710	1650	1680	1680	1610	1640	1790	1670	1730
22	1650	1610	1630	1720	1630	1660	1690	1610	1640	1800	1710	1740
23	1650	1610	1630	1710	1610	1650	1720	1610	1650	1820	1710	1750
24	1670	1630	1650	1720	1600	1660	1690	1620	1640	1810	1690	1740
25	1660	1620	1640	1690	1600	1650	1680	1620	1640	1800	1690	1740
26	1670	1620	1640	1720	1620	1660	1690	1600	1640	1800	1690	1740
27	1680	1630	1650	1700	1630	1650	1670	1570	1620	1770	1670	1720
28	1660	1530	1630	1710	1620	1650	1650	763	1350	1740	1630	1680
29	1660	1590	1620	1710	1640	1670	1560	835	1420	1730	1580	1650
30	1650	1570	1600	1710	1640	1670	1620	1510	1570	1700	1630	1660
31	1630	1560	1590	---	---	---	1570	1540	1560	1710	1630	1660
MONTH	1700	1320	1630	1740	1540	1630	1780	763	1620	1820	1520	1670

	FEBRUARY			MARCH			APRIL			MAY		
DAY	MAX	MIN	MEAN	MAX	MIN	MEAN	MAX	MIN	MEAN	MAX	MIN	MEAN
1	1730	1650	1680	1680	1610	1650	1650	1530	1590	1720	1610	1670
2	1710	960	1630	1690	1620	1650	1630	1520	1570	---	---	---
3	---	---	---	1690	1610	1650	1650	1510	1580	---	---	---
4	---	---	---	1690	1630	1660	1620	1520	1560	1730	1590	1680
5	---	---	---	1710	1070	1550	1790	923	1450	---	---	---
6	---	---	---	---	---	---	1590	1370	1510	---	---	---
7	---	---	---	---	---	---	1650	1470	1560	1710	1530	1650
8	---	---	---	---	---	---	1610	1560	1590	1710	1590	1640
9	---	---	---	---	---	---	1640	964	1430	1750	1600	1680
10	1610	1500	1540	1630	1560	1580	1670	1170	1570	1780	1660	1730
11	1730	1480	1620	1640	1560	1590	1690	1210	1580	1760	1690	1710
12	1650	1570	1620	1670	1550	1600	1710	1350	1620	1800	1570	1680
13	1670	1600	1640	1660	1580	1620	1720	1620	1670	1720	1620	1680
14	1670	1580	1630	1680	1530	1620	1690	1650	1670	1760	1670	1720
15	1750	1560	1610	1700	1580	1630	1700	1620	1650	1760	1660	1720
16	1640	1540	1570	1730	1620	1660	1690	1580	1620	1770	1680	1730
17	1650	1520	1570	1740	1630	1690	---	---	---	1690	1090	1330
18	1650	1540	1590	1700	1620	1660	---	---	---	1530	1100	1240
19	1680	1580	1630	1720	1640	1680	---	---	---	1650	1580	1620
20	1720	1630	1660	1730	1660	1690	---	---	---	1610	1330	1540
21	1720	1620	1660	1790	1600	1710	---	---	---	---	---	---
22	1720	1590	1650	1780	1620	1690	1690	1580	1650	---	---	---
23	1720	1610	1660	1740	1630	1680	---	---	---	1580	1390	1430
24	1670	1610	1640	1730	1630	1670	---	---	---	1530	1400	1460
25	1670	1600	1630	1690	1630	1650	---	---	---	1510	1410	1460
26	1680	1600	1630	1710	1580	1640	---	---	---	1510	1410	1470
27	1670	1610	1640	1710	1600	1640	---	---	---	1510	1460	1480
28	1670	1620	1640	1700	1570	1630	---	---	---	---	---	---
29	---	---	---	1710	1580	1640	---	---	---	---	---	---
30	---	---	---	1700	1580	1650	---	---	---	1590	1390	1490
31	---	---	---	1630	1570	1600	---	---	---	---	---	---
MONTH	---	---	---	1790	1070	1640	---	---	---	---	---	---

11108500 SANTA CLARA RIVER AT LOS ANGELES-VENTURA COUNTY LINE, CALIF.--Continued

SPECIFIC CONDUCTANCE (MICROMHOS/CM AT 25 DEG. C), WATER YEAR OCTOBER 1974 TO SEPTEMBER 1975

	JUNE			JULY			AUGUST			SEPTEMBER		
DAY	MAX	MIN	MEAN	MAX	MIN	MEAN	MAX	MIN	MEAN	MAX	MIN	MEAN
1	---	---	---	1700	1460	1590	1830	1590	1720	1780	1690	1740
2	1510	1450	1480	1830	1600	1690	1910	1620	1770	1750	1670	1720
3	---	---	---	1820	1570	1690	1820	1570	1720	1730	1650	1700
4	1510	1410	1460	1750	1590	1650	1780	1620	1700	1780	1660	1710
5	---	---	---	1710	1570	1630	1810	1600	1710	1730	1660	1700
6	---	---	---	1750	1620	1680	1790	1630	1710	1700	1630	1670
7	1490	1440	1470	1740	1620	1680	1750	1570	1690	1720	1650	1680
8	1490	1430	1450	1820	1670	1730	1770	1610	1690	1700	1640	1670
9	1450	942	1330	1720	1520	1660	1760	1600	1710	1670	1640	1650
10	1290	766	950	---	---	---	1800	1640	1730	1680	1630	1650
11	1670	1330	1530	---	---	---	1800	1630	1730	1680	1640	1660
12	1740	1430	1630	---	---	---	1800	1650	1740	1700	1650	1670
13	1760	1600	1670	---	---	---	1790	1620	1720	1700	1640	1670
14	1810	1670	1730	---	---	---	1720	1570	1650	1710	1650	1670
15	1790	1690	1720	---	---	---	1700	1560	1640	1670	1620	1640
16	1730	1670	1690	---	---	---	1690	1530	1630	1660	1610	1630
17	1710	1550	1680	1860	1700	1780	1700	1550	1640	1660	1610	1620
18	1710	1460	1670	1880	1710	1790	1710	1550	1650	1640	1590	1610
19	1660	1480	1610	1950	1640	1800	1710	1550	1640	1650	1610	1630
20	1580	1380	1510	---	---	---	---	---	---	1690	1610	1640
21	1660	1500	1570	1920	1670	1810	---	---	---	1670	1590	1630
22	1630	1500	1570	1820	1560	1710	---	---	---	1650	1600	1630
23	1600	1470	1540	1820	1500	1670	---	---	---	1680	1630	1650
24	1570	1460	1510	1870	1530	1700	---	---	---	1690	1650	1660
25	1670	1220	1470	1860	1510	1680	---	---	---	1680	1640	1660
26	1740	1530	1630	---	---	---	---	---	---	1660	1630	1640
27	1800	1610	1710	---	---	---	---	---	---	1680	1640	1650
28	1760	1580	1670	---	---	---	1770	1690	1730	1680	1640	1650
29	1720	1500	1620	---	---	---	1840	1710	1760	1690	1650	1660
30	1680	1520	1600	---	---	---	---	---	---	1700	1650	1670
31	---	---	---	1790	1600	1710	1810	1700	1750	---	---	---
MONTH	1810	766	1560	---	---	---	---	---	---	1780	1590	1660

TEMPERATURE (DEG. C) OF WATER, WATER YEAR OCTOBER 1974 TO SEPTEMBER 1975
ONCE-DAILY

DAY	OCT	NOV	DEC	JAN	FEB	MAR	APR	MAY	JUN	JUL	AUG	SEP
1	20.0	---	---	---	---	---	---	---	---	---	29.0	28.5
2	---	---	12.0	11.5	---	---	---	12.5	---	---	---	---
3	24.0	---	---	---	13.5	---	9.0	---	23.0	22.5	---	---
4	---	18.0	12.0	---	---	12.0	---	---	---	---	---	---
5	---	---	10.0	---	---	13.0	12.5	22.5	---	---	25.0	20.5
6	---	---	16.0	16.0	12.0	10.5	14.0	---	---	---	---	---
7	17.0	---	10.0	---	---	13.0	12.0	---	23.0	---	---	---
8	---	---	13.5	---	---	11.5	---	---	---	25.0	31.0	28.5
9	---	16.0	10.5	12.0	12.0	13.0	9.0	24.5	---	---	---	---
10	16.0	---	---	---	12.0	13.0	---	---	22.0	---	---	---
11	---	18.0	---	---	9.0	10.0	19.0	---	---	29.0	---	---
12	---	---	10.0	---	17.5	19.0	---	23.0	19.0	---	24.5	---
13	---	---	12.5	10.0	16.0	14.0	---	19.0	---	---	---	24.0
14	25.0	19.0	---	---	---	---	12.5	---	24.5	---	---	---
15	---	18.0	---	---	---	---	---	---	---	26.0	26.5	---
16	25.0	---	12.0	17.5	---	---	---	16.0	---	---	---	22.0
17	16.0	---	---	---	16.5	9.0	19.0	---	---	---	---	---
18	---	---	---	---	---	---	---	---	22.5	26.0	---	---
19	---	12.5	9.0	---	---	---	---	17.0	---	---	26.0	26.0
20	---	---	---	9.0	9.0	12.0	---	---	---	---	---	---
21	21.5	---	---	---	---	---	---	---	23.5	---	---	---
22	---	16.5	---	---	---	12.0	16.0	24.0	---	27.0	28.0	---
23	---	---	8.0	17.0	---	---	13.5	---	---	---	---	24.0
24	21.0	---	---	---	11.5	22.0	---	---	25.0	---	---	---
25	---	17.0	---	---	19.0	---	20.5	---	---	---	---	14.5
26	---	---	13.0	---	---	---	---	25.0	---	29.0	27.5	26.0
27	---	15.5	---	12.0	---	---	---	---	---	---	26.5	---
28	16.0	---	11.5	10.5	18.0	11.0	24.0	---	23.0	---	---	---
29	18.5	11.0	---	---	---	---	---	---	---	24.0	28.0	---
30	---	---	10.0	11.0	---	---	15.5	26.0	29.0	20.0	---	20.0
31	16.0	---	---	---	---	13.0	---	---	---	---	---	---
MONTH	---	---	---	---	---	---	---	---	---	---	---	---

11108500 SANTA CLARA RIVER AT LOS ANGELES-VENTURA COUNTY LINE, CALIF.--Continued

SUSPENDED-SEDIMENT DISCHARGE (TONS/DAY), WATER YEAR OCTOBER 1974 TO SEPTEMBER 1975

	OCTOBER			NOVEMBER			DECEMBER		
DAY	MEAN DISCHARGE (CFS)	MEAN CONCEN-TRATION (MG/L)	SEDIMENT DISCHARGE (TONS/DAY)	MEAN DISCHARGE (CFS)	MEAN CONCEN-TRATION (MG/L)	SEDIMENT DISCHARGE (TONS/DAY)	MEAN DISCHARGE (CFS)	MEAN CONCEN-TRATION (MG/L)	SEDIMENT DISCHARGE (TONS/DAY)
1	12	90	2.9	20	45	2.4	13	155	5.4
2	11	80	2.4	20	60	3.2	14	155	5.9
3	10	70	1.9	20	50	2.7	15	175	7.1
4	12	75	2.4	20	50	2.7	243	3160	4520
5	14	80	3.0	20	50	2.7	25	120	8.1
6	14	85	3.2	19	50	2.6	18	85	4.1
7	45	1820	336	18	45	2.2	45	1460	281
8	24	655	61	17	40	1.8	52	760	164
9	17	210	9.6	17	35	1.6	21	160	9.1
10	18	170	8.3	17	35	1.6	20	150	8.1
11	19	165	8.5	15	35	1.4	21	130	7.4
12	18	155	7.5	15	35	1.4	21	110	6.2
13	18	150	7.3	16	40	1.7	20	100	5.4
14	19	135	6.9	15	55	2.2	20	80	4.3
15	18	115	5.6	14	70	2.6	20	60	3.2
16	16	90	3.9	14	65	2.5	19	45	2.3
17	16	70	3.0	14	60	2.3	19	55	2.8
18	16	65	2.8	14	60	2.3	19	60	3.1
19	16	65	2.8	14	55	2.1	20	70	3.8
20	16	60	2.6	13	65	2.3	20	70	3.8
21	16	55	2.4	13	70	2.5	21	70	4.0
22	15	45	1.8	13	80	2.8	21	75	4.3
23	16	40	1.7	13	80	2.8	20	75	4.1
24	15	30	1.2	12	80	2.6	21	70	4.0
25	16	30	1.3	12	80	2.6	22	70	4.2
26	16	35	1.5	13	100	3.5	22	65	3.9
27	16	60	2.6	13	120	4.2	22	65	3.9
28	17	110	5.0	14	130	4.9	69	580	179
29	18	135	6.6	13	155	5.4	46	490	107
30	17	80	3.7	13	155	5.4	23	110	6.8
31	18	30	1.5	---	---	---	20	110	5.9
TOTAL	529	---	510.9	461	---	81.0	972	---	5382.2

	JANUARY			FEBRUARY			MARCH		
DAY	MEAN DISCHARGE (CFS)	MEAN CONCEN-TRATION (MG/L)	SEDIMENT DISCHARGE (TONS/DAY)	MEAN DISCHARGE (CFS)	MEAN CONCEN-TRATION (MG/L)	SEDIMENT DISCHARGE (TONS/DAY)	MEAN DISCHARGE (CFS)	MEAN CONCEN-TRATION (MG/L)	SEDIMENT DISCHARGE (TONS/DAY)
1	21	110	6.2	16	35	1.5	17	35	1.6
2	20	110	5.9	28	210	42	16	35	1.5
3	20	105	5.7	196	2310	2300	16	30	1.3
4	20	105	5.7	35	220	21	16	30	1.3
5	20	100	5.4	28	90	6.8	28	180	28
6	20	100	5.4	26	60	4.2	428	4270	7020
7	20	90	4.9	26	60	4.2	116	270	85
8	21	80	4.5	28	60	4.5	379	5970	9840
9	20	75	4.1	41	420	46	50	400	54
10	21	75	4.3	41	210	23	38	450	46
11	21	90	5.1	32	115	9.9	50	200	27
12	21	115	6.5	31	90	7.5	31	180	15
13	21	125	7.1	31	80	6.7	28	125	9.5
14	21	125	7.1	32	80	6.9	25	120	8.1
15	20	125	6.8	31	80	6.7	31	140	12
16	18	120	5.8	30	80	6.5	27	140	10
17	17	115	5.3	29	85	6.7	17	135	6.2
18	16	100	4.3	29	80	6.3	16	130	5.6
19	15	85	3.4	27	70	5.1	16	130	5.6
20	15	70	2.8	28	60	4.5	15	125	5.1
21	16	60	2.6	25	60	4.1	15	125	5.1
22	15	40	1.6	24	55	3.6	19	1280	66
23	14	30	1.1	25	50	3.4	17	150	6.9
24	18	30	1.5	25	50	3.4	17	110	5.0
25	15	25	1.0	24	40	2.6	19	100	5.1
26	15	25	1.0	22	40	2.4	18	70	3.4
27	17	30	1.4	21	40	2.3	20	45	2.4
28	17	30	1.4	19	40	2.1	21	40	2.3
29	17	35	1.6	---	---	---	22	90	5.3
30	17	35	1.6	---	---	---	24	120	7.8
31	17	35	1.6	---	---	---	25	130	8.8
TOTAL	566	---	122.7	950	---	2543.9	1577	---	17300.9

11108500 SANTA CLARA RIVER AT LOS ANGELES-VENTURA COUNTY LINE, CALIF.--Continued

SUSPENDED-SEDIMENT DISCHARGE (TONS/DAY), WATER YEAR OCTOBER 1974 TO SEPTEMBER 1975

	APRIL			MAY			JUNE		
DAY	MEAN DISCHARGE (CFS)	MEAN CONCEN-TRATION (MG/L)	SEDIMENT DISCHARGE (TONS/DAY)	MEAN DISCHARGE (CFS)	MEAN CONCEN-TRATION (MG/L)	SEDIMENT DISCHARGE (TONS/DAY)	MEAN DISCHARGE (CFS)	MEAN CONCEN-TRATION (MG/L)	SEDIMENT DISCHARGE (TONS/DAY)
1	25	120	8.1	18	160	7.8	17	50	2.3
2	25	110	7.4	18	170	8.3	18	60	2.9
3	25	100	6.8	19	165	8.5	20	70	3.8
4	26	70	4.9	20	160	8.6	22	65	3.9
5	39	880	172	19	155	8.0	19	60	3.1
6	25	300	20	18	145	7.0	19	55	2.8
7	26	230	16	19	140	7.2	20	45	2.4
8	27	250	18	18	130	6.3	23	40	2.5
9	50	1790	348	18	125	6.1	46	380	109
10	28	500	38	18	120	5.8	128	550	190
11	31	380	32	19	110	5.6	24	260	17
12	31	320	27	17	65	3.0	15	205	8.3
13	32	250	22	16	35	1.5	11	170	5.0
14	33	190	17	16	30	1.3	10	150	4.1
15	35	150	14	16	30	1.3	12	140	4.5
16	33	110	9.8	16	30	1.3	13	115	4.0
17	31	80	6.7	16	30	1.3	14	95	3.6
18	30	70	5.7	16	40	1.7	14	80	3.0
19	29	65	5.1	20	50	2.7	15	75	3.0
20	29	60	4.7	26	90	6.3	15	90	3.6
21	29	55	4.3	25	125	8.4	10	105	2.8
22	28	50	3.8	21	150	8.5	11	115	3.4
23	28	45	3.4	19	175	9.0	12	110	3.6
24	28	40	3.0	20	145	7.8	13	105	3.7
25	30	35	2.8	20	140	7.6	13	130	4.6
26	28	30	2.3	21	130	7.4	12	200	6.5
27	28	30	2.3	21	120	6.8	11	315	9.4
28	29	30	2.3	18	100	4.9	11	315	9.4
29	28	30	2.3	17	70	3.2	12	235	7.6
30	22	70	4.2	15	50	2.0	12	205	6.6
31	---	---	---	17	45	2.1	---	---	---
TOTAL	888	---	813.9	577	---	167.3	592	---	436.4

	JULY			AUGUST			SEPTEMBER		
DAY	MEAN DISCHARGE (CFS)	MEAN CONCEN-TRATION (MG/L)	SEDIMENT DISCHARGE (TONS/DAY)	MEAN DISCHARGE (CFS)	MEAN CONCEN-TRATION (MG/L)	SEDIMENT DISCHARGE (TONS/DAY)	MEAN DISCHARGE (CFS)	MEAN CONCEN-TRATION (MG/L)	SEDIMENT DISCHARGE (TONS/DAY)
1	14	205	7.7	12	120	3.9	9.5	20	.51
2	12	205	6.6	10	115	3.1	9.7	20	.52
3	12	205	6.6	9.1	110	2.7	9.9	20	.53
4	12	190	6.2	9.8	100	2.6	10	25	.68
5	12	175	5.7	9.5	95	2.4	10	25	.68
6	11	155	4.6	10	95	2.6	10	25	.68
7	11	140	4.2	11	100	3.0	11	25	.74
8	11	120	3.6	10	110	3.0	11	25	.74
9	12	100	3.2	9.3	120	3.0	12	30	.97
10	12	80	2.6	10	125	3.4	12	30	.97
11	11	105	3.1	11	130	3.9	12	35	1.1
12	10	60	1.6	11	135	4.0	10	35	.95
13	12	70	2.3	9.4	140	3.6	10	40	1.1
14	9.6	80	2.1	9.3	140	3.5	11	40	1.2
15	11	95	2.8	8.7	145	3.4	11	40	1.2
16	11	110	3.3	8.6	145	3.4	11	45	1.3
17	13	110	3.9	9.1	150	3.7	11	50	1.5
18	13	110	3.9	9.1	150	3.7	11	60	1.8
19	12	110	3.6	9.5	150	3.8	11	65	1.9
20	10	110	3.0	8.1	130	2.8	11	65	1.9
21	10	110	3.0	10	80	2.2	11	65	1.9
22	11	110	3.3	13	50	1.8	11	60	1.8
23	10	125	3.4	19	45	2.3	11	60	1.8
24	10	165	4.5	13	40	1.4	10	60	1.6
25	10	245	6.6	8.7	30	.70	10	65	1.8
26	10	300	8.1	7.6	25	.51	9.8	70	1.9
27	10	285	7.7	8.5	20	.46	9.6	70	1.8
28	9.9	270	7.2	8.7	20	.47	9.2	75	1.9
29	9.8	250	6.6	8.9	20	.48	9.9	75	2.0
30	10	220	5.9	9.1	20	.49	10	75	2.0
31	10	160	4.3	9.3	20	.50	---	---	---
TOTAL	342.3	---	141.2	310.3	---	76.81	315.6	---	39.47

11108500 SANTA CLARA RIVER AT LOS ANGELES-VENTURA COUNTY LINE, CALIF.--Continued

PARTICLE-SIZE DISTRIBUTION OF SUSPENDED SEDIMENT, WATER YEAR OCTOBER 1974 TO SEPTEMBER 1975

DATE	TIME	TEMPERATURE (DEG C)	INSTANTANEOUS DISCHARGE (CFS)	SUSPENDED SEDIMENT (MG/L)	SUSPENDED SEDIMENT DISCHARGE (T/DAY)	SUS. SED. FALL DIAM. % FINER THAN .002 MM	SUS. SED. FALL DIAM. % FINER THAN .004 MM	SUS. SED. FALL DIAM. % FINER THAN .008 MM	SUS. SED. FALL DIAM. % FINER THAN .016 MM	SUS. SED. FALL DIAM. % FINER THAN .031 MM
OCT.										
07...	0915	17.0	21	593	34	44	54	67	78	82
DEC.										
04...	0720	12.0	2210	10000	59700	34	44	61	76	86
04...	1135	13.5	152	3730	1530	37	49	64	73	79
MAR.										
08...	0715	11.5	1160	8780	27500	29	43	58	75	88
22...	0720	12.0	25	2530	171	29	38	54	72	85
APR.										
09...	0705	9.0	116	4730	1480	33	43	57	72	83

DATE	SUS. SED. FALL DIAM. % FINER THAN .062 MM	SUS. SED. SIEVE DIAM. % FINER THAN .062 MM	SUS. SED. FALL DIAM. % FINER THAN .125 MM	SUS. SED. SIEVE DIAM. % FINER THAN .125 MM	SUS. SED. FALL DIAM. % FINER THAN .250 MM	SUS. SED. SIEVE DIAM. % FINER THAN .250 MM	SUS. SED. FALL DIAM. % FINER THAN .500 MM	SUS. SED. SIEVE DIAM. % FINER THAN .500 MM	SUS. SED. FALL DIAM. % FINER THAN 1.00 MM	SUS. SED. SIEVE DIAM. % FINER THAN 1.00 MM
OCT.										
07...	--	84	--	87	--	94	--	98	--	100
DEC.										
04...	90	--	93	--	98	--	100	--	--	--
04...	82	--	84	--	89	--	98	--	100	--
MAR.										
08...	94	--	98	--	100	--	--	--	--	--
22...	89	--	91	--	96	--	100	--	--	--
APR.										
09...	87	--	92	--	98	--	100	--	--	--

PARTICLE-SIZE DISTRIBUTION OF SURFACE BED MATERIAL, WATER YEAR OCTOBER 1974 TO SEPTEMBER 1975

DATE	TIME	TEMPERATURE (DEG C)	NUMBER OF SAMPLING POINTS	INSTANTANEOUS DISCHARGE (CFS)	BED MAT. SIEVE DIAM. % FINER THAN .062 MM	BED MAT. SIEVE DIAM. % FINER THAN .125 MM	BED MAT. SIEVE DIAM. % FINER THAN .250 MM	BED MAT. SIEVE DIAM. % FINER THAN .500 MM
SEP.								
30...	1100	20.0	3	10	2	3	10	32

DATE	BED MAT. SIEVE DIAM. % FINER THAN 1.00 MM	BED MAT. SIEVE DIAM. % FINER THAN 2.00 MM	BED MAT. SIEVE DIAM. % FINER THAN 4.00 MM	BED MAT. SIEVE DIAM. % FINER THAN 8.00 MM	BED MAT. SIEVE DIAM. % FINER THAN 16.0 MM	BED MAT. SIEVE DIAM. % FINER THAN 32.0 MM	BED MAT. SIEVE DIAM. % FINER THAN 64.0 MM
SEP.							
30...	53	67	77	84	89	95	100

11109100 PIRU CREEK BELOW THORN MEADOWS, NEAR STAUFFER, CALIF.

LOCATION.--Lat 34°38'21", long 119°05'43", in SW¼NE¼SW¼ sec.3, T.6 N., R.21 W., Ventura County, on right bank 1.3 mi (2.1 km) northeast of Thorn Meadows, and 8 mi (13 km) southwest of Stauffer.

DRAINAGE AREA.--22.5 mi^2 (58.3 km^2).

PERIOD OF RECORD.--October 1971 to current year.

GAGE.--Water-stage recorder. Altitude of gage is 4,280 ft (1,305 m), from topographic map.

EXTREMES.--Current year: Maximum discharge, 583 ft^3/s (16.5 m^3/s) Mar. 8 (gage height, 3.87 ft or 1.180 m), from rating curve extended above 16 ft^3/s (0.45 m^3/s) on basis of slope-area measurement at gage height 5.37 ft (1.637 m); no flow many days.
Period of record: Maximum discharge, 1,660 ft^3/s (47.0 m^3/s) Feb. 11, 1973 (gage height, 5.37 ft or 1.637 m, from floodmarks), from rating curve extended above 60 ft^3/s (1.70 m^3/s) on basis of slope-area measurement of maximum flow; no flow many days in each year.

REMARKS.--Records good below 20 ft^3/s (0.57 m^3/s) and fair above. No regulation or diversion above station.

COOPERATION.--Twelve discharge measurements furnished by Ventura County Flood Control District.

DISCHARGE, IN CUBIC FEET PER SECOND, WATER YEAR OCTOBER 1974 TO SEPTEMBER 1975
MEAN VALUES

DAY	OCT	NOV	DEC	JAN	FEB	MAR	APR	MAY	JUN	JUL	AUG	SEP
1	0	.03	.02	1.7	1.5	3.1	7.8	8.0	1.5	.19	.02	0
2	0	.03	.02	1.7	1.6	3.1	7.2	8.0	1.5	.19	.01	0
3	0	.03	11	1.7	4.8	3.1	7.0	7.4	1.5	.19	.01	0
4	0	.03	149	1.7	4.3	3.1	7.0	7.0	1.5	.19	0	0
5	0	.03	7.7	1.9	8.3	19	9.0	6.4	1.5	.14	0	0
6	0	.03	5.5	4.3	7.2	183	8.1	6.0	1.5	.14	0	0
7	0	.02	2.7	11	10	261	7.7	5.7	1.5	.14	0	0
8	.01	.02	1.7	9.4	9.2	344	7.3	4.9	1.5	.14	0	0
9	.01	.02	1.2	3.7	87	110	7.5	4.7	1.1	.14	0	0
10	.01	.02	.90	3.6	22	43	7.1	4.2	1.1	.14	0	0
11	.01	.02	.94	2.6	13	29	7.6	4.0	.94	.13	0	0
12	.01	.02	.94	1.7	8.7	21	8.2	3.6	.94	.09	0	.06
13	.01	.02	.94	1.3	8.0	21	11	3.3	.79	.06	0	0
14	.01	.02	.70	1.3	8.0	21	11	3.1	.79	.06	0	0
15	.01	.02	.79	1.3	7.0	18	11	3.1	.66	.06	0	0
16	.01	.02	.79	1.2	6.2	18	10	3.1	.53	.06	0	0
17	.01	.02	.79	1.2	4.9	14	9.7	3.1	.41	.05	0	0
18	.01	.02	.78	1.2	4.4	13	8.6	3.1	.41	.05	0	0
19	.01	.02	.94	1.2	4.3	15	8.3	3.0	.41	.04	0	0
20	.01	.02	.93	1.4	4.7	16	8.0	2.9	.41	.05	0	0
21	.01	.02	.94	1.5	3.8	14	8.4	2.9	.41	.04	0	0
22	.01	.02	.94	1.2	3.6	15	9.7	3.0	.41	.04	0	.01
23	.01	.02	.94	1.2	3.1	13	11	2.7	.41	.03	0	.01
24	.01	.02	.79	1.3	3.3	13	9.7	2.4	.41	.03	0	.01
25	.01	.02	.79	1.3	3.1	16	10	2.4	.41	.02	0	.01
26	.01	.02	.66	1.3	3.1	13	9.5	2.3	.41	.02	0	.01
27	.01	.02	.79	1.2	3.1	12	8.5	2.1	.32	.02	0	.01
28	.01	.02	1.3	1.3	3.1	9.4	8.0	2.1	.25	.03	0	.01
29	.03	.02	1.3	1.3	---	8.7	8.0	1.9	.25	.02	0	.01
30	.03	.02	1.9	1.5	---	8.4	8.0	1.8	.19	.02	0	.01
31	.03	---	1.9	1.5	---	8.3	---	1.7	---	.02	0	---
TOTAL	.30	.66	200.53	69.7	251.3	1289.2	259.9	119.9	23.96	2.54	.04	.15
MEAN	.010	.022	6.47	2.25	8.98	41.6	8.66	3.87	.80	.082	.001	.005
MAX	.03	.03	149	11	87	344	11	8.0	1.5	.19	.02	.06
MIN	0	.02	.02	1.2	1.5	3.1	7.0	1.7	.19	.02	0	0
AC-FT	.6	1.3	398	138	498	2560	516	238	48	5.0	.08	.3

CAL YR 1974 TOTAL 1916.30 MEAN 5.25 MAX 149 MIN 0 AC-FT 3800
WTR YR 1975 TOTAL 2218.18 MEAN 6.08 MAX 344 MIN 0 AC-FT 4400

Peak discharge (base, 50 ft^3/s)

Date	Time	G.H.	Discharge	Date	Time	G.H.	Discharge
12-4	0245	3.76	525	3-8	0300	3.87	583
2-9	1145	2.79	175				

11109200 MIDDLE FORK LOCKWOOD CREEK NEAR STAUFFER, CALIF.

LOCATION.--Lat 34°45'56", long 119°07'12", in SW¼NE¼SE¼ sec.20, T.8 N., R.21 W., Ventura County, on right bank 3.3 mi (5.3 km) upstream from Lockwood Creek, and 3.3 mi (5.3 km) northwest of Stauffer.

DRAINAGE AREA.--5.50 mi^2 (14.24 km^2).

PERIOD OF RECORD.--October 1971 to current year.

GAGE.--Water-stage recorder. Altitude of gage is 5,530 ft (1,686 m), from topographic map.

EXTREMES.--Current year: Maximum discharge, 25 ft^3/s (0.71 m^3/s) Dec. 4 (gage height, 2.53 ft or 0.771 m); no flow Sept. 3-5.
Period of record: Maximum discharge, 560 ft^3/s (15.9 m^3/s) July 23, 1974 (gage height, 4.80 ft or 1.463 m), from rating curve extended above 13 ft^3/s (0.37 m^3/s) on basis of slope-area measurement of maximum flow; no flow for some days in each year.

REMARKS.--Records fair. No regulation or diversion above station.

COOPERATION.--Fifteen discharge measurements furnished by Ventura County Flood Control District.

DISCHARGE, IN CUBIC FEET PER SECOND, WATER YEAR OCTOBER 1974 TO SEPTEMBER 1975
MEAN VALUES

DAY	OCT	NOV	DEC	JAN	FEB	MAR	APR	MAY	JUN	JUL	AUG	SEP
1	.05	.25	.15	.26	.17	.16	1.3	2.0	.55	.25	.04	.01
2	.09	.20	.15	.22	.20	.16	1.3	1.9	.54	.22	.03	.01
3	.13	.15	.86	.27	.24	.16	1.2	2.4	.55	.22	.02	0
4	.09	.15	5.7	.27	.22	.16	1.0	2.2	.50	.22	.03	0
5	.09	.15	.63	.21	.22	.19	1.0	1.7	.52	.19	.02	0
6	.09	.14	.34	.22	.17	.26	.77	1.6	.55	.16	.02	.01
7	.13	.14	.37	.27	.47	2.2	1.0	1.6	.48	.16	.02	.01
8	.13	.14	.33	.30	.56	4.0	.96	1.6	.41	.16	.02	.07
9	.11	.16	.39	.33	.55	.72	.88	1.6	.41	.13	.01	.07
10	.09	.15	.41	.35	.58	.56	.79	1.6	.38	.16	.01	.07
11	.07	.14	.35	.30	.58	1.2	.83	1.5	.36	.11	.01	.09
12	.05	.14	.41	.30	.48	1.0	.87	1.3	.33	.11	.02	.13
13	.09	.14	.56	.29	.48	.62	1.2	1.3	.34	.11	.02	.11
14	.07	.14	.54	.28	.55	.48	1.5	1.3	.34	.11	.01	.09
15	.07	.14	.55	.28	.48	.41	1.4	1.2	.31	.11	.01	.09
16	.07	.15	.47	.28	.41	.41	1.2	1.2	.30	.10	.01	.29
17	.10	.15	.46	.30	.41	.41	1.1	1.1	.31	.11	.01	.09
18	.11	.16	.51	.26	.30	1.1	.78	1.1	.32	.11	.02	.05
19	.11	.16	.45	.27	.31	2.0	.78	.98	.32	.10	.03	.03
20	.11	.17	.49	.27	.21	1.9	.94	.98	.32	.09	.05	.03
21	.11	.17	.48	.26	.27	2.2	1.4	.88	.32	.09	.05	.02
22	.11	.17	.59	.26	.23	2.2	1.8	.88	.30	.08	.04	.03
23	.09	.18	.27	.26	.23	1.7	2.0	.78	.29	.07	.03	.02
24	.13	.17	.38	.24	.22	2.7	2.0	.78	.29	.07	.03	.02
25	.09	.17	.32	.26	.19	2.9	2.0	.78	.29	.06	.02	.02
26	.16	.17	.30	.26	.16	2.9	2.0	.62	.27	.05	.02	.02
27	.22	.17	.24	.19	.16	2.9	1.7	.62	.26	.05	.02	.02
28	.48	.17	.59	.15	.16	2.2	1.7	.63	.26	.05	.02	.01
29	.26	.17	.27	.17	---	1.8	1.7	.62	.26	.06	.02	.01
30	.26	.17	.43	.18	---	1.4	1.7	.52	.25	.06	.02	.02
31	.23	---	.31	.13	---	1.3	---	.55	---	.05	.01	---
TOTAL	3.99	4.83	18.30	7.89	9.21	42.30	38.80	37.82	10.93	3.62	.69	1.44
MEAN	.13	.16	.59	.25	.33	1.36	1.29	1.22	.36	.12	.022	.048
MAX	.48	.25	5.7	.35	.58	4.0	2.0	2.4	.55	.25	.05	.29
MIN	.05	.14	.15	.13	.16	.16	.77	.52	.25	.05	.01	0
AC-FT	7.9	9.6	36	16	18	84	77	75	22	7.2	1.4	2.9

CAL YR 1974 TOTAL 228.13 MEAN .63 MAX 16 MIN .03 AC-FT 452
WTR YR 1975 TOTAL 179.82 MEAN .49 MAX 5.7 MIN 0 AC-FT 357

Peak discharge (base, 100 ft^3/s).--No peak above base.

11109250 LOCKWOOD CREEK AT GORGE, NEAR STAUFFER, CALIF.

LOCATION.--Lat 34°43'57", long 119°02'14", in SE¼SW¼SE¼ sec.31, T.8 N., R.20 W., Ventura County, on right bank 2.1 mi (3.4 km) southeast of Stauffer, and 3.8 mi (6.1 km) upstream from Piru Creek.

DRAINAGE AREA.--58.7 mi^2 (152.0 km^2).

PERIOD OF RECORD.--October 1971 to current year.

GAGE.--Water-stage recorder. Altitude of gage is 4,790 ft (1,460 m), from topographic map.

EXTREMES.--Current year: Maximum discharge, 246 ft^3/s (6.97 m^3/s) Dec. 4 (gage height, 4.09 ft or 1.247 m), from rating curve extended above 11 ft^3/s (0.31 m^3/s) on basis of slope-area measurement at gage height 4.92 ft (1.500 m); minimum daily, 1.9 ft^3/s (0.054 m^3/s) July 14-16, Aug. 15.
Period of record: Maximum discharge, 906 ft^3/s (25.7 m^3/s) Aug. 2, 1974 (gage height, 4.92 ft or 1.500 m), from rating curve extended above 34 ft^3/s (0.96 m^3/s) on basis of slope-area measurement at gage height 4.92 ft (1.500 m); minimum daily, 1.0 ft^3/s (0.028 m^3/s) Aug. 15, 16, 18-20, 22, 23, 1974.

REMARKS.--Records good below 20 ft^3/s (0.57 m^3/s) and fair above. No regulation or diversion above station; some pumping from wells along stream.

COOPERATION. Sixteen discharge measurements furnished by Ventura County Flood Control District.

REVISIONS (WATER YEARS). -WRD Calif. 1974: 1973(M).

DISCHARGE, IN CUBIC FEET PER SECOND, WATER YEAR OCTOBER 1974 TO SEPTEMBER 1975
MEAN VALUES

DAY	OCT	NOV	DEC	JAN	FEB	MAR	APR	MAY	JUN	JUL	AUG	SEP
1	2.6	3.6	2.9	2.7	3.2	3.0	3.2	4.6	3.4	2.6	2.7	2.6
2	2.6	3.5	2.9	2.4	3.8	3.1	3.2	4.9	3.4	2.8	2.7	2.5
3	2.6	3.5	7.0	2.5	3.4	3.2	3.3	5.5	3.4	2.7	2.5	2.5
4	2.6	3.2	82	2.6	3.3	3.2	3.3	6.2	3.4	2.9	2.3	2.5
5	2.7	3.2	4.4	2.6	3.4	4.6	4.0	4.7	3.4	3.0	2.4	2.4
6	2.6	3.2	3.3	2.7	3.2	25	3.9	3.8	3.6	2.7	2.3	2.4
7	12	2.9	3.2	2.6	3.2	69	4.2	3.9	3.3	2.4	2.6	2.4
8	4.2	2.9	3.2	2.6	3.3	104	4.0	3.8	2.8	2.2	2.6	2.6
9	3.2	2.9	3.2	2.5	17	46	4.9	4.5	2.8	2.2	2.5	2.6
10	3.2	2.9	3.2	2.6	6.8	25	5.5	4.8	2.8	2.2	2.5	2.6
11	3.2	2.9	3.2	2.6	3.5	18	6.6	4.5	2.8	2.2	2.2	2.6
12	3.2	2.9	3.2	2.6	3.6	14	5.0	4.0	2.8	2.2	2.2	2.6
13	3.2	2.9	3.1	2.6	3.5	13	4.9	4.3	2.7	2.2	2.3	2.4
14	3.2	2.9	3.1	2.6	3.8	12	4.8	4.5	2.7	1.9	2.3	2.2
15	3.2	2.9	3.2	2.6	3.4	7.4	4.7	4.4	2.7	1.9	1.9	2.2
16	3.2	2.9	3.2	4.0	3.5	6.9	4.6	4.2	2.7	1.9	2.2	2.8
17	3.2	2.9	3.2	4.2	3.5	6.6	4.2	3.9	2.7	2.2	2.2	2.6
18	3.2	2.9	3.2	3.9	3.3	6.4	3.5	3.9	2.8	2.3	2.1	2.4
19	3.4	2.9	3.1	3.5	3.4	6.4	3.5	3.9	2.8	2.3	2.1	2.5
20	3.5	2.9	2.9	3.2	3.3	7.5	3.5	4.5	2.8	2.5	2.4	2.3
21	3.5	3.0	2.9	3.1	3.3	6.8	3.5	4.1	2.6	2.3	2.3	2.4
22	3.4	3.0	3.0	3.1	3.3	7.0	3.8	3.9	2.6	2.3	2.1	2.5
23	3.4	2.9	2.9	3.1	3.5	6.0	4.6	3.7	2.6	2.4	2.1	2.8
24	3.0	2.9	2.9	3.2	2.9	6.0	4.6	3.7	2.6	2.5	2.4	2.7
25	3.0	2.9	2.6	3.5	3.0	6.6	5.2	3.7	2.6	2.5	2.3	2.8
26	3.1	2.9	3.0	3.3	3.0	5.4	4.9	3.4	2.6	2.5	2.2	2.9
27	3.2	2.9	3.2	2.8	3.0	4.2	4.4	3.4	2.6	2.4	2.2	3.1
28	5.0	2.9	3.1	2.8	3.0	3.7	4.3	3.2	2.6	2.1	2.5	2.9
29	4.0	2.9	2.6	2.9	---	3.5	4.6	3.3	2.7	2.2	2.5	2.9
30	3.6	2.9	2.7	3.2	---	3.2	5.3	3.4	2.7	2.3	2.4	2.9
31	3.5	---	2.6	3.2	---	3.2	---	3.4	---	2.7	2.5	---
TOTAL	109.5	90.0	178.2	91.8	110.4	439.9	130.0	128.0	86.0	73.5	72.5	77.6
MEAN	3.53	3.00	5.75	2.96	3.94	14.2	4.33	4.13	2.87	2.37	2.34	2.59
MAX	12	3.6	82	4.2	17	104	6.6	6.2	3.6	3.0	2.7	3.1
MIN	2.6	2.9	2.6	2.4	2.9	3.0	3.2	3.2	2.6	1.9	1.9	2.2
AC-FT	217	179	353	182	219	873	258	254	171	146	144	154

CAL YR 1974 TOTAL 1650.6 MEAN 4.52 MAX 82 MIN 1.0 AC-FT 3270
WTR YR 1975 TOTAL 1587.4 MEAN 4.35 MAX 104 MIN 1.9 AC-FT 3150

Peak discharge (base, 100 ft^3/s).--Dec. 4 (0215) 246 ft^3/s (4.09 ft); Mar. 8 (0645) 149 ft^3/s (3.53 ft).

11109550 PIRU CREEK ABOVE FRENCHMANS FLAT, CALIF.

LOCATION.--Lat 34°37'43", long 118°44'42", in NW¼SW¼NW¼ sec.12, T.6 N., R.18 W., Los Angeles County, on right bank of concrete-lined channel beside Interstate Highway 5, 1 mi (2 km) north of Frenchmans Flat, and 12.5 mi (20.1 km) north of Castaic.

PERIOD OF RECORD.--Chemical analyses: October 1972 to September 1973.
Specific conductance: March 1972 to current year.

EXTREMES.--Current year:
Specific conductance: Maximum, 1,430 micromhos Mar. 8; minimum, 414 micromhos Jan. 15.
Period of record:
Specific conductance: Maximum recorded, 2,540 micromhos Dec. 29, 1973; minimum recorded, 338 micromhos Nov. 30, 1972.

REMARKS.--Gaging station 700 ft (213 m) upstream operated by California Department of Water Resources.

SPECIFIC CONDUCTANCE (MICROMHOS/CM AT 25 DEG. C), WATER YEAR OCTOBER 1974 TO SEPTEMBER 1975

	OCTOBER			NOVEMBER			DECEMBER			JANUARY		
DAY	MAX	MIN	MEAN	MAX	MIN	MEAN	MAX	MIN	MEAN	MAX	MIN	MEAN
1	576	546	564	629	602	620	702	633	648	760	535	691
2	837	564	636	651	624	630	678	639	655	527	515	521
3	912	591	672	637	616	630	969	612	699	553	505	519
4	697	661	672	626	608	619	1250	915	1120	504	498	503
5	744	663	678	624	603	615	1060	876	962	554	494	514
6	757	667	683	626	611	619	879	786	837	571	496	527
7	986	635	765	639	606	617	786	747	768	515	485	492
8	1100	715	856	623	608	616	747	702	730	493	481	487
9	728	659	716	627	606	616	723	687	703	489	471	480
10	963	660	734	656	608	621	774	672	697	476	467	471
11	712	661	699	639	594	617	705	675	688	475	463	469
12	669	654	661	622	610	617	708	678	689	464	458	460
13	667	649	658	646	598	613	685	649	669	457	445	453
14	680	647	660	633	612	619	673	646	658	480	429	451
15	682	661	670	648	612	622	688	652	669	501	414	453
16	701	662	673	648	612	625	691	661	670	462	447	454
17	690	660	672	633	615	623	676	655	665	478	442	454
18	683	656	674	627	612	619	679	649	662	463	448	455
19	684	637	651	632	611	623	672	643	654	463	454	457
20	689	668	673	641	623	632	676	646	657	469	454	460
21	680	662	673	641	629	635	674	644	657	467	455	462
22	679	658	668	641	611	628	659	632	656	461	452	459
23	677	653	670	644	614	626	667	631	645	467	437	459
24	695	656	676	662	620	637	662	629	641	494	452	464
25	684	657	670	673	619	637	663	627	642	470	443	461
26	656	647	653	676	622	641	674	641	655	471	462	467
27	654	645	650	670	622	637	670	634	655	465	462	465
28	696	630	653	649	628	638	944	690	796	471	462	467
29	639	633	638	661	625	638	945	804	879	480	471	474
30	646	631	640	670	604	635	822	777	793	477	474	475
31	637	622	629	---	---	---	791	734	762	555	480	515
MONTH	1100	546	674	676	594	626	1250	612	719	760	414	482

11109550 PIRU CREEK ABOVE FRENCHMANS FLAT, CALIF.--Continued

SPECIFIC CONDUCTANCE (MICROMHOS/CM AT 25 DEG. C), WATER YEAR OCTOBER 1974 TO SEPTEMBER 1975

	FEBRUARY			MARCH			APRIL			MAY		
DAY	MAX	MIN	MEAN	MAX	MIN	MEAN	MAX	MIN	MEAN	MAX	MIN	MEAN
1	550	538	544	728	635	660	516	504	511	578	534	547
2	700	535	576	710	632	654	516	501	507	549	531	538
3	847	667	797	725	626	656	513	498	506	546	531	538
4	742	688	714	683	629	652	510	498	503	543	528	535
5	688	661	680	815	626	707	618	498	562	540	474	503
6	673	646	659	1100	750	992	585	540	566	477	456	467
7	661	637	648	1180	981	1100	585	564	569	465	456	461
8	655	610	638	1430	855	1210	564	549	556	468	459	462
9	779	614	713	1420	1310	1390	576	546	555	477	450	462
10	758	704	739	1310	576	996	624	540	560	480	456	462
11	722	686	704	579	552	565	555	537	544	537	453	471
12	704	680	689	555	528	541	552	525	537	462	450	457
13	806	665	694	540	519	527	546	522	530	465	450	457
14	825	753	800	534	519	526	531	525	529	459	453	456
15	804	738	765	519	507	514	546	519	531	465	444	457
16	781	727	757	513	501	506	528	522	526	462	456	458
17	778	718	743	504	495	499	525	519	523	462	444	457
18	782	719	749	507	486	494	526	517	521	462	447	457
19	809	731	754	501	480	492	530	515	522	474	459	465
20	777	732	753	489	486	489	528	516	520	492	468	474
21	756	717	733	489	486	488	562	517	538	477	468	472
22	751	691	720	504	480	490	569	548	557	474	468	471
23	790	706	734	486	480	482	585	549	560	474	468	470
24	785	707	744	480	474	479	580	535	556	474	465	470
25	761	668	722	486	474	479	569	524	553	474	468	470
26	752	626	677	480	471	474	573	546	553	474	465	469
27	737	638	663	480	471	475	589	547	557	474	462	469
28	722	641	668	477	471	472	575	548	555	468	441	460
29	---	---	---	474	468	471	564	546	555	465	435	453
30	---	---	---	480	462	472	571	547	554	489	447	457
31	---	---	---	516	474	496	---	---	---	462	453	457
MONTH	847	535	706	1430	462	627	624	498	541	578	435	474

	JUNE			JULY			AUGUST			SEPTEMBER		
DAY	MAX	MIN	MEAN	MAX	MIN	MEAN	MAX	MIN	MEAN	MAX	MIN	MEAN
1	462	453	457	603	555	567	604	559	578	608	552	587
2	462	450	457	600	558	568	608	554	578	607	551	586
3	459	450	456	585	525	550	639	546	581	603	561	585
4	498	456	474	552	525	533	599	557	581	602	558	583
5	477	462	469	543	525	529	609	552	580	604	570	585
6	471	453	463	555	516	531	595	574	581	596	564	580
7	462	453	457	558	525	530	611	560	579	606	552	584
8	471	453	461	537	525	531	600	561	576	592	570	583
9	465	444	457	546	525	533	595	547	578	594	572	582
10	462	444	457	550	497	524	617	560	578	604	576	586
11	465	453	460	522	504	512	592	571	580	592	574	585
12	468	444	458	525	498	514	614	563	582	590	572	584
13	471	456	463	520	508	514	645	567	589	604	558	584
14	471	459	466	529	505	515	615	567	584	614	558	589
15	465	459	462	527	506	515	621	568	583	612	566	593
16	576	441	496	528	516	520	623	563	586	612	576	595
17	576	558	564	525	516	520	604	553	578	620	574	592
18	603	546	567	529	517	521	592	517	553	610	560	586
19	558	552	555	533	515	522	537	489	516	594	556	583
20	588	552	563	530	518	523	521	506	513	592	574	586
21	606	552	570	585	519	538	550	507	526	594	558	585
22	588	552	564	585	537	568	561	515	543	592	568	582
23	579	552	563	604	541	574	555	517	540	594	568	582
24	594	546	565	617	557	576	594	526	566	596	568	585
25	603	549	566	605	545	568	596	564	583	596	576	585
26	606	546	566	606	549	568	593	563	581	592	568	581
27	579	555	565	601	553	566	597	569	584	590	570	578
28	585	549	564	580	556	570	594	562	582	584	570	577
29	612	549	566	608	563	576	593	563	584	588	556	579
30	600	558	571	599	548	569	591	553	583	594	558	579
31	---	---	---	612	561	579	608	578	590	---	---	---
MONTH	612	441	511	617	497	543	645	489	571	620	551	584

11109600 PIRU CREEK ABOVE LAKE PIRU, CALIF.

LOCATION.--Lat 34°31'23", long 118°45'22", in SW¼NE¼NW¼ sec.15, T.5 N., R.18 W., Ventura County, on left bank near Blue Point, 1.3 mi (2.1 km) downstream from Agua Blanca Creek, 4.3 mi (6.9 km) upstream from Santa Felicia Dam, and 8.0 mi (12.9 km) northeast of Piru.

DRAINAGE AREA.--372 mi^2 (963 km^2).

PERIOD OF RECORD.--October 1955 to current year.

GAGE.--Water-stage recorder. Datum of gage is 1,058.55 ft (322.646 m) above mean sea level (levels by U.S. Forest Service). Prior to Dec. 15, 1972, at site 0.3 mi (0.5 km) upstream at different datum.

AVERAGE DISCHARGE.--16 years (1955-71), 55.1 ft^3/s (1.560 m^3/s), 39,920 acre-ft/yr (49.2 hm^3/yr).

EXTREMES.--Current year: Maximum discharge, 1,720 ft^3/s (48.7 m^3/s) Dec. 4 (gage height, 6.02 ft or 1.835 m), from rating curve extended above 108 ft^3/s (3.06 m^3/s) on basis of field estimate of peak flow; minimum daily, 3.4 ft^3/s (0.096 m^3/s) Oct. 12.

Period of record: Maximum discharge, 31,200 ft^3/s (884 m^3/s) Feb. 25, 1969 (gage height, 18.6 ft or 5.669 m, site and datum then in use, from floodmark), from rating curve extended above 4,000 ft^3/s (113 m^3/s) on basis of slope-area measurement at gage height 12.2 ft (3.719 m) and inflow-outflow records for Lake Piru; no flow for periods in most years.

Flood of Mar. 2, 1938, 35,000 ft^3/s (991 m^3/s), is the greatest since that date.

REMARKS.--Records fair. Flow regulated beginning December 1971 by Pyramid Dam, capacity, 173,500 acre-ft (214 hm^3) 15 mi (24 km) upstream. Imported water from the California Water Project stored behind and released from Pyramid Dam. No diversion above station.

DISCHARGE, IN CUBIC FEET PER SECOND, WATER YEAR OCTOBER 1974 TO SEPTEMBER 1975
MEAN VALUES

DAY	OCT	NOV	DEC	JAN	FEB	MAR	APR	MAY	JUN	JUL	AUG	SEP
1	8.6	4.9	5.9	15	24	11	43	31	136	11	8.6	10
2	8.8	4.6	5.9	17	60	11	40	31	125	11	8.8	10
3	5.9	4.6	20	19	152	11	40	31	125	11	9.0	9.5
4	4.4	4.6	691	20	52	11	40	31	98	10	9.0	9.0
5	3.9	4.6	35	21	45	33	108	42	120	11	9.3	8.6
6	4.1	4.3	17	21	39	478	64	75	125	12	8.6	9.0
7	6.5	4.5	14	23	37	449	59	115	125	13	8.6	9.0
8	8.7	4.0	14	26	33	743	51	115	125	13	8.6	9.0
9	4.8	4.4	13	27	90	240	47	115	125	13	8.6	9.0
10	4.9	4.8	11	28	53	154	43	115	125	13	9.2	9.0
11	3.6	5.1	12	29	23	162	44	115	120	13	8.6	9.0
12	3.4	5.2	11	29	21	129	43	115	120	14	7.3	9.0
13	3.9	5.3	12	29	25	114	40	134	120	14	7.7	9.0
14	4.1	5.2	12	30	23	88	41	136	120	14	8.2	9.0
15	4.1	5.2	12	30	15	71	43	136	120	13	7.7	8.8
16	4.1	5.2	12	30	13	88	41	136	100	13	8.2	8.8
17	3.8	5.7	11	30	13	81	41	125	40	14	8.6	8.6
18	3.6	5.5	11	30	12	67	40	108	20	14	10	8.6
19	3.6	5.5	11	30	12	73	40	100	15	13	25	8.4
20	3.6	5.5	11	31	12	70	39	60	13	13	24	8.4
21	3.6	5.5	11	30	12	71	39	53	12	13	23	8.2
22	3.6	5.7	11	30	11	74	30	53	12	10	16	8.2
23	3.6	5.9	11	30	11	72	31	55	11	9.5	15	8.0
24	3.6	5.5	11	30	11	63	31	55	12	8.6	15	8.0
25	3.8	5.5	11	30	11	67	31	53	13	9.0	12	7.7
26	3.8	5.5	11	31	11	68	31	55	12	9.0	11	7.7
27	4.3	5.5	11	31	11	70	31	55	11	9.7	11	8.2
28	5.9	5.7	18	30	11	71	31	59	11	9.7	12	8.6
29	5.7	6.0	18	28	---	71	31	77	10	9.7	11	9.0
30	5.0	6.0	15	24	---	71	31	103	11	9.7	10	9.0
31	4.9	---	15	27	---	67	---	111	---	9.0	11	---
TOTAL	146.2	155.5	1084.8	836	843	3849	1264	2595	2132	359.9	350.6	262.3
MEAN	4.72	5.18	35.0	27.0	30.1	124	42.1	83.7	71.1	11.6	11.3	8.74
MAX	8.8	6.0	691	31	152	743	108	136	136	14	25	10
MIN	3.4	4.0	5.9	15	11	11	30	31	10	8.6	7.3	7.7
AC-FT	290	308	2150	1660	1670	7630	2510	5150	4230	714	695	520

CAL YR 1974 TOTAL 13916.1 MEAN 38.1 MAX 1820 MIN 1.4 AC-FT 27600
WTR YR 1975 TOTAL 13878.3 MEAN 38.0 MAX 743 MIN 3.4 AC-FT 27530

11109600 PIRU CREEK ABOVE LAKE PIRU, CALIF.--Continued

PERIOD OF RECORD.--Specific conductance: March 1971 to current year.

EXTREMES.--Current year:
Specific conductance: Maximum recorded, 1,150 micromhos Dec. 30; minimum recorded, 497 micromhos June 5.
Period of record:
Specific conductance: Maximum recorded, 1,980 micromhos June 3, 1973; minimum recorded, 464 micromhos Apr. 22, 1973.

REMARKS.--Periods of missing specific conductance data due to recorder malfunction.

SPECIFIC CONDUCTANCE (MICROMHOS/CM AT 25 DEG. C), WATER YEAR OCTOBER 1974 TO SEPTEMBER 1975

	OCTOBER			NOVEMBER			DECEMBER			JANUARY		
DAY	MAX	MIN	MEAN	MAX	MIN	MEAN	MAX	MIN	MEAN	MAX	MIN	MEAN
1	856	818	835	---	---	---	971	914	938	1130	1050	1080
2	849	801	829	---	---	---	964	926	946	1050	802	947
3	882	808	841	---	---	---	1140	878	945	845	781	812
4	---	---	---	---	---	---	963	519	739	820	771	801
5	---	---	---	---	---	---	1140	983	1080	852	772	810
6	906	875	896	---	---	---	1080	1010	1040	868	777	833
7	906	856	881	---	---	---	1080	989	1030	854	770	801
8	907	881	895	919	881	901	1090	1010	1040	768	749	760
9	---	---	---	923	885	902	1080	1010	1030	746	723	732
10	946	912	926	938	881	911	1090	1000	1030	733	706	720
11	961	931	943	946	900	919	1090	1000	1040	727	710	720
12	969	935	945	942	904	923	1100	1020	1050	717	693	706
13	965	943	955	934	908	922	1070	1010	1030	710	673	688
14	967	937	950	938	911	924	1070	1010	1040	705	674	686
15	971	948	956	944	910	930	1090	1020	1040	703	683	690
16	967	948	961	954	924	933	1090	1010	1040	---	---	---
17	993	964	978	957	926	945	1070	1010	1040	---	---	---
18	992	965	977	957	922	937	1070	1010	1030	---	---	---
19	987	953	974	960	915	942	1070	998	1030	---	---	---
20	973	946	959	964	934	948	1070	1000	1030	---	---	---
21	972	934	962	949	938	943	1070	1020	1040	---	---	---
22	960	937	948	939	916	930	1060	987	1020	701	653	670
23	959	940	949	943	897	922	1060	975	1000	---	---	---
24	976	938	957	962	897	925	1050	968	994	---	---	---
25	963	941	952	958	905	925	1050	971	1000	---	---	---
26	959	944	949	950	901	923	1060	952	997	700	663	676
27	958	931	942	940	897	918	1050	971	1010	692	668	677
28	946	915	929	935	882	910	1090	930	1010	706	679	697
29	---	---	---	947	897	920	1080	961	1040	---	---	---
30	---	---	---	944	906	926	1150	1090	1120	---	---	---
31	---	---	---	---	---	---	1140	1070	1100	---	---	---
MONTH	993	801	932	---	---	---	1150	519	1020	---	---	---

11109600 PIRU CREEK ABOVE LAKE PIRU, CALIF.--Continued

SPECIFIC CONDUCTANCE (MICROMHOS/CM AT 25 DEG. C), WATER YEAR OCTOBER 1974 TO SEPTEMBER 1975

	FEBRUARY			MARCH			APRIL			MAY		
DAY	MAX	MIN	MEAN	MAX	MIN	MEAN	MAX	MIN	MEAN	MAX	MIN	MEAN
1				---	---	---	796	745	770	785	751	767
2				---	---	---	801	761	785	771	731	748
3				---	---	---	822	780	799	748	724	734
4				---	---	---	817	792	806	741	714	728
5				---	---	---	815	523	689	721	680	704
6				---	---	---	787	640	749	663	581	615
7				---	---	---	816	735	782	571	546	558
8				---	---	---	840	816	824	561	536	547
9				---	---	---	854	766	806	561	532	549
10				---	---	---	783	752	767	561	532	544
11				---	---	---	772	762	767	557	528	540
12				---	---	---	769	749	762	---	---	---
13				---	---	---	766	738	755	---	---	---
14				736	662	711	755	742	749	---	---	---
15				710	690	702	762	738	745	---	---	---
16				701	688	693	752	732	742	---	---	---
17				682	665	672	747	720	736	---	---	---
18				685	661	672	742	714	732	---	---	---
19				689	665	677	753	713	733	---	---	---
20				685	665	675	752	707	730	---	---	---
21				685	665	675	753	712	734	---	---	---
22				695	644	674	775	745	761	---	---	---
23				682	658	670	787	746	763	---	---	---
24				685	651	671	775	761	768	---	---	---
25				689	658	676	780	760	771	---	---	---
26				685	665	674	778	765	771	---	---	---
27				682	647	666	790	766	778	---	---	---
28				653	640	645	795	771	783	---	---	---
29				652	635	642	793	752	775	---	---	---
30				658	628	644	791	757	775	---	---	---
31				732	640	661	---	---	---	---	---	---
MONTH				---	---	---	854	523	764	---	---	---

	JUNE			JULY			AUGUST			SEPTEMBER		
DAY	MAX	MIN	MEAN	MAX	MIN	MEAN	MAX	MIN	MEAN	MAX	MIN	MEAN
1	---	---	---	774	725	749	816	766	789	824	768	795
2	---	---	---	779	727	753	818	772	793	822	766	793
3	---	---	---	794	746	772	818	770	792	822	766	793
4	556	502	526	796	726	758	818	770	791	824	762	792
5	540	497	513	768	714	744	816	768	790	824	760	791
6	544	508	524	767	713	748	818	770	790	826	764	794
7	546	499	517	766	704	746	818	772	790	826	762	793
8	551	504	527	764	721	751	820	774	792	822	762	791
9	538	502	520	763	705	736	816	768	790	818	752	788
10	542	506	525	751	708	734	812	766	788	820	762	794
11	568	514	538	757	706	740	812	770	788	820	760	792
12	576	532	550	777	709	751	819	777	796	824	760	793
13	570	530	553	776	715	751	819	775	797	822	754	791
14	594	551	572	767	717	750	822	778	798	824	758	792
15	596	553	572	770	723	750	825	777	800	824	754	790
16	626	564	588	768	718	745	822	768	799	826	754	790
17	747	645	694	778	703	741	821	779	800	816	746	783
18	781	644	750	763	691	734	820	780	802	822	752	788
19	856	822	837	755	683	722	823	669	724	824	752	789
20	791	740	772	733	679	711	693	645	673	824	758	791
21	793	738	767	725	664	701	694	644	672	828	758	792
22	784	736	766	756	688	722	727	687	708	828	758	792
23	772	738	759	773	716	749	750	688	723	823	749	787
24	780	753	768	800	754	774	835	691	732	818	744	780
25	782	748	768	830	784	807	796	738	764	820	748	783
26	773	743	756	835	789	811	794	752	773	821	749	785
27	768	726	751	833	789	809	810	758	784	811	747	776
28	770	732	751	830	782	805	814	758	787	811	743	776
29	778	729	755	820	776	797	816	760	787	804	742	773
30	773	727	752	812	762	787	818	766	792	806	754	780
31	---	---	---	814	766	788	822	770	794	---	---	---
MONTH	856	497	654	835	664	756	835	644	774	828	742	788

11109700 LAKE PIRU NEAR PIRU, CALIF.

LOCATION.--Lat 34°27'52", long 118°44'57", in Temescal Grant, Ventura County, at Santa Felicia Dam on Piru Creek, on left bank 1,000 ft (305 m) upstream from left end of dam, 0.5 mi (0.8 km) downstream from Santa Felicia Canyon, and 4.2 mi (6.8 km) northeast of Piru.

DRAINAGE AREA.--425 mi^2 (1,101 km^2).

PERIOD OF RECORD.--May 1955 to current year.

GAGE.--Nonrecording gage. Datum of gage is at mean sea level (levels by United Water Conservation District). Prior to Jan. 27, 1956, reference point at intake tower at same datum.

EXTREMES.--Current year: Maximum contents, 23,530 acre-ft (29.0 hm^3) June 17 (elevation, 983.95 ft or 299.908 m); minimum, 7,060 acre-ft (8.70 hm^3) Oct. 21 to Nov. 1 (elevation, 947.80 ft or 288.889 m).
Period of record: Maximum contents observed, 109,400 acre-ft (135 hm^3) Feb. 25, 1969 (elevation, 1,061.45 ft or 323.530 m); lake dry Oct. 25 to Nov. 20, 1961.

REMARKS.--Lake is formed by earthfill dam. Storage began May 20, 1955. Capacity table is based on a survey made in 1975. Capacity below spillway level at elevation 1,055.0 ft (321.564 m), 91,010 acre-ft (112 hm^3), revised. Flow regulated since December 1971 by Pyramid Dam, capacity, 173,500 acre-ft (214 hm^3). Imported water from the California Water Project stored behind and released from Pyramid Dam. Water is released from outlet to Piru Creek for ground-water recharge, domestic use, and irrigation on the Oxnard plain.

COOPERATION.--Elevations furnished by United Water Conservation District.

MONTHEND ELEVATION AND CONTENTS, WATER YEAR OCTOBER 1974 TO SEPTEMBER 1975

Date	Elevation (feet)a	Contents (acre-feet)	Change in contents (acre-feet)
Sept. 30.....	949.20	7,470	--
Oct. 31.....	947.80	7,060	-410
Nov. 30.....	947.85	7,070	+10
Dec. 31.....	948.80	7,350	+280
CAL YR 1974.....	--	--	-1,940
Jan. 31.....	953.80	8,920	+1,570
Feb. 28.....	957.70	10,240	+1,320
Mar. 31.....	972.10	16,580	+6,340
Apr. 30.....	975.75	18,570	+1,990
May 31.....	980.10	21,100	+2,530
June 30.....	982.95	22,880	+1,780
July 31.....	963.10	12,290	-10,590
Aug. 31.....	960.20	11,140	-1,150
Sept. 30.....	960.00	11,060	-80
WTR YR 1975.....	--	--	+3,590

a Elevation at 0800.
NOTE.--Computed on basis of revised capacity table put into use Oct. 1, 1974.

11109800 PIRU CREEK BELOW SANTA FELICIA DAM, CALIF.

LOCATION.--Lat 34°27'37", long 118°45'04", in Temescal Grant, Ventura County, on right bank 750 ft (229 m) downstream from Santa Felicia Dam, 1 mi (2 km) upstream from Lime Canyon, and 4 mi (6 km) northeast of Piru.

DRAINAGE AREA.--425 mi^2 (1,100 km^2).

PERIOD OF RECORD.--October 1955 to September 1968, October 1973 to current year.

GAGE.--Water-stage recorder and concrete control. Datum of gage is 858.8 ft (261.76 m) above mean sea level (levels by United Water Conservation District).

EXTREMES.--Current year: Maximum daily discharge, 251 ft^3/s (7.11 m^3/s) July 16-18; minimum daily, 0.93 ft^3/s (0.026 m^3/s) Dec. 31.
Period of record: Maximum discharge, 544 ft^3/s (15.4 m^3/s) Aug. 18, 1958 (gage height, 3.66 ft or 1.116 m); no flow at times in some years.

REMARKS.--Records good. Flow regulated since December 1971 by Pyramid Dam, capacity, 173,500 acre-ft (214 hm^3). Imported water from the California Water Project stored behind and released from Pyramid Dam. Flow also regulated by Lake Piru (see sta 11109700). No diversion above station.

DISCHARGE, IN CUBIC FEET PER SECOND, WATER YEAR OCTOBER 1974 TO SEPTEMBER 1975
MEAN VALUES

DAY	OCT	NOV	DEC	JAN	FEB	MAR	APR	MAY	JUN	JUL	AUG	SEP
1	38	7.9	8.8	1.6	4.2	4.2	4.6	38	32	31	168	8.8
2	38	8.1	8.8	1.6	4.2	4.2	4.6	38	32	32	169	8.6
3	38	8.1	8.8	1.6	4.2	4.2	4.6	38	32	32	169	8.4
4	38	8.1	8.8	1.6	4.2	4.2	4.6	38	32	32	110	8.4
5	38	8.1	8.8	1.6	4.2	4.2	4.7	38	32	32	9.0	8.4
6	38	8.1	101	1.6	4.2	4.2	4.6	37	32	32	9.1	8.4
7	20	8.1	188	1.6	4.2	4.2	4.6	38	32	109	9.1	8.4
8	8.8	8.1	185	1.6	4.2	4.2	4.6	38	32	250	9.1	8.4
9	8.8	8.1	142	1.8	4.2	4.2	4.7	37	32	250	9.1	8.4
10	8.8	8.1	7.9	1.8	4.2	4.2	4.8	38	32	250	9.1	8.4
11	8.8	8.1	7.7	1.8	4.2	4.2	4.6	38	32	250	9.1	8.4
12	8.8	8.1	7.7	1.8	4.2	4.3	4.6	37	32	250	9.1	8.4
13	8.8	8.1	7.9	1.8	4.2	4.3	4.6	38	32	250	9.1	8.4
14	8.8	8.3	7.9	1.8	4.2	4.3	4.6	38	32	250	9.1	8.4
15	8.8	8.4	8.1	1.8	4.2	4.3	4.6	38	32	250	9.1	8.4
16	8.8	8.7	8.1	1.8	4.2	4.3	4.6	37	32	251	9.1	8.4
17	8.7	8.8	8.1	1.8	4.2	4.4	4.6	37	33	251	9.1	5.2
18	8.8	8.8	8.1	1.8	4.2	4.4	4.6	37	33	251	9.1	8.6
19	8.8	8.8	8.1	1.8	4.2	4.4	4.6	37	33	250	9.1	9.5
20	8.4	8.9	8.3	3.1	4.2	4.4	4.6	37	34	250	9.1	9.9
21	8.4	8.8	8.7	3.9	4.2	4.4	17	37	34	225	9.1	9.9
22	8.4	8.8	8.9	3.9	4.2	4.5	38	37	34	212	9.1	9.9
23	8.4	8.8	9.1	3.9	4.2	4.5	37	37	34	211	9.1	9.9
24	8.4	8.8	9.1	3.9	4.2	4.5	37	37	34	210	9.1	9.9
25	8.1	8.8	9.1	3.9	4.2	4.5	37	37	34	210	8.7	9.9
26	8.1	8.8	9.1	3.9	4.2	4.5	37	37	35	210	8.1	9.9
27	8.1	8.8	9.1	3.9	4.2	4.6	37	33	35	211	8.5	9.9
28	8.2	8.8	9.1	4.0	4.2	4.6	37	30	35	183	8.8	9.9
29	8.1	8.8	9.1	4.2	---	4.6	37	32	35	168	8.8	9.5
30	8.1	8.8	4.0	4.2	---	4.6	37	32	34	169	8.8	9.5
31	8.1	---	.93	4.2	---	4.6	---	32	---	168	8.8	---
TOTAL	452.3	253.8	834.13	79.6	117.6	135.2	443.4	1133	989	5730	858.4	266.4
MEAN	14.6	8.46	26.9	2.57	4.20	4.36	14.8	36.5	33.0	185	27.7	8.88
MAX	38	8.9	188	4.2	4.2	4.6	38	38	35	251	169	9.9
MIN	8.1	7.9	.93	1.6	4.2	4.2	4.6	30	32	31	8.1	5.2
AC-FT	897	503	1650	158	233	268	879	2250	1960	11370	1700	528

CAL YR 1974 TOTAL 15813.63 MEAN 43.3 MAX 352 MIN .93 AC-FT 31370
WTR YR 1975 TOTAL 11292.83 MEAN 30.9 MAX 251 MIN .93 AC-FT 22400

11109800 PIRU CREEK BELOW SANTA FELICIA DAM, CALIF.--Continued

PERIOD OF RECORD.--Specific conductance: February 1974 to current year.

EXTREMES.--Current year:
Specific conductance: Maximum recorded, 1,320 micromhos June 13; minimum recorded, 801 micromhos June 23.
Period of record:
Specific conductance: Maximum recorded, 1,320 micromhos June 13, 1975; minimum recorded, 801 micromhos June 23, 1975.

REMARKS.--Periods of missing specific conductance data due to recorder malfunction.

SPECIFIC CONDUCTANCE (MICROMHOS/CM AT 25 DEG. C), WATER YEAR OCTOBER 1974 TO SEPTEMBER 1975

	OCTOBER			NOVEMBER			DECEMBER			JANUARY		
DAY	MAX	MIN	MEAN	MAX	MIN	MEAN	MAX	MIN	MEAN	MAX	MIN	MEAN
1	1170	1150	1150	1220	1170	1210	1270	1240	1250	---	---	---
2	1150	1140	1150	1230	1210	1220	1270	1250	1260	1230	1150	1170
3	1150	1090	1140	1260	1210	1220	1270	1240	1260	1250	1150	1180
4	1170	1130	1150	1250	1220	1230	1260	1180	1250	1250	1160	1190
5	1170	1130	1150	1280	1200	1230	1250	1200	1220	1260	1170	1200
6	1180	1140	1160	1240	1190	1210	1250	1200	1220	1270	1190	1210
7	1180	1120	1150	1280	1170	1210	1220	1200	1210	1260	1200	1220
8	1180	1150	1170	1220	1190	1200	1210	1200	1210	1240	1190	1210
9	1200	1130	1190	1220	1190	1200	1210	1200	1200	1230	1190	1200
10	1200	1190	1190	1220	1190	1200	1220	1200	1200	1300	1200	1220
11	1200	1180	1190	1220	1160	1200	1220	1190	1200	1270	1190	1210
12	1200	1180	1190	1220	1160	1190	1230	1190	1210	1240	1160	1180
13	1200	1180	1190	---	---	---	1210	1190	1200	1240	1140	1160
14	1210	1160	1190	---	---	---	1220	1190	1200	1230	1120	1150
15	1200	1160	1180	1240	1210	1220	1230	1200	1210	1250	1110	1160
16	1210	1140	1190	1250	1220	1230	1230	1200	1210	1240	1130	1160
17	1220	1190	1200	1260	1230	1240	1240	1210	1220	1240	1130	1160
18	1210	1200	1200	1260	1230	1240	1250	1220	1230	1230	1130	1160
19	1210	1190	1200	1270	1230	1250	1250	1220	1230	1230	1130	1160
20	1200	1160	1200	1290	1240	1260	1250	1230	1230	1220	1130	1160
21	1200	1180	1190	1270	1260	1260	1260	1230	1240	1250	1150	1180
22	1220	1190	1210	1280	1250	1260	1250	1220	1240	1240	1170	1190
23	1220	1180	1210	1280	1240	1260	1240	1220	1230	1240	1160	1180
24	1230	1190	1210	---	---	---	1240	1200	1220	1250	1160	1190
25	1220	1200	1210	---	---	---	1240	1210	1220	1260	1180	1200
26	1220	1200	1210	---	---	---	1250	1210	1230	1260	1190	1210
27	1230	1190	1210	---	---	---	1250	1210	1230	1230	1200	1210
28	1240	1190	1210	1260	1230	1240	1250	1210	1230	1210	1130	1160
29	1220	1200	1210	1270	1240	1250	1260	1240	1240	1190	1130	1150
30	1230	1200	1210	1260	1240	1240	---	---	---	1160	1130	1140
31	1230	1200	1210	---	---	---	---	---	---	1160	1140	1140
MONTH	1240	1090	1190	1290	1160	1230	1270	1180	1220	1300	1110	1180

11109800 PIRU CREEK BELOW SANTA FELICIA DAM, CALIF.--Continued

SPECIFIC CONDUCTANCE (MICROMHOS/CM AT 25 DEG. C), WATER YEAR OCTOBER 1974 TO SEPTEMBER 1975

	FEBRUARY			MARCH			APRIL			MAY		
DAY	MAX	MIN	MEAN	MAX	MIN	MEAN	MAX	MIN	MEAN	MAX	MIN	MEAN
1	1160	1140	1140	1210	1150	1180	991	950	972	1020	952	988
2	1140	1090	1130	1230	1170	1190	992	948	973	995	960	982
3	1190	1120	1150	1240	1170	1190	988	947	973	1010	960	985
4	1190	1170	1170	1210	1150	1180	983	941	961	1030	944	981
5	1200	1140	1160	1170	1140	1160	955	927	942	1030	964	993
6	1200	1140	1160	1170	1130	1150	977	914	937	1020	963	998
7	1200	1150	1160	1190	1150	1160	984	928	956	1040	958	990
8	1200	1140	1160	1220	1140	1180	976	946	960	1030	965	992
9	1150	1140	1150	1200	1180	1180	989	948	968	1050	960	999
10	1180	1120	1140	1190	1170	1180	989	944	966	1080	961	1010
11	1170	1120	1130	1200	1160	1180	992	956	979	1080	942	995
12	1180	1130	1150	1200	1160	1180	989	944	974	1090	954	994
13	1170	1150	1160	1160	1140	1160	989	940	967	1060	955	1010
14	1200	1140	1160	1190	1140	1160	964	928	949	1080	943	1000
15	1200	1150	1170	1170	1140	1160	968	940	948	1040	945	984
16	1220	1160	1180	1180	1130	1160	989	949	972	1020	948	988
17	1210	1160	1180	1170	1140	1150	999	941	974	1040	944	977
18	1230	1170	1190	1150	1100	1130	998	950	979	1020	934	980
19	1220	1170	1180	1120	1090	1100	1010	950	986	1010	927	970
20	1220	1160	1180	1110	1080	1100	1010	955	991	960	906	928
21	1190	1130	1150	1090	1050	1070	1010	963	992	990	920	950
22	1190	1120	1140	1100	1050	1070	1010	964	986	1040	928	990
23	1190	1110	1140	1090	1050	1080	1020	972	984	1030	950	980
24	1200	1120	1140	1080	1050	1070	1020	982	1000	1060	926	1000
25	1180	1130	1150	1070	1030	1050	997	937	972	1090	930	1000
26	1200	1120	1140	1070	1010	1040	1030	951	991	1070	928	990
27	1210	1140	1160	1050	1020	1040	1030	961	999	1020	900	970
28	1220	1140	1170	1030	948	984	1020	972	998	1000	897	940
29	---	---	---	1010	966	987	1030	966	998	1070	894	970
30	---	---	---	1000	964	986	1030	962	991	1130	898	960
31	---	---	---	1010	978	989	---	---	---	1100	877	990
MONTH	1230	1090	1160	1240	948	1120	1030	914	975	1130	877	983

	JUNE			JULY			AUGUST			SEPTEMBER		
DAY	MAX	MIN	MEAN	MAX	MIN	MEAN	MAX	MIN	MEAN	MAX	MIN	MEAN
1	1040	884	960	990	906	953	878	852	867	965	929	951
2	1030	892	960	960	879	932	882	856	871	966	926	950
3	1010	892	967	966	904	931	884	860	873	963	923	947
4	1070	991	976	997	919	960	888	842	875	960	922	945
5	1070	895	984	993	925	956	---	---	---	963	925	945
6	1100	903	994	944	901	923	---	---	---	---	---	---
7	1100	915	1000	906	885	896	900	846	877	---	---	---
8	1220	919	1060	911	880	894	906	848	880	---	---	---
9	1170	907	1010	930	878	899	920	860	887	---	---	---
10	1200	908	1050	914	883	896	900	862	885	965	943	958
11	1250	901	1020	917	878	900	---	---	---	972	940	959
12	1200	927	1030	879	846	862	918	876	901	971	941	959
13	1320	928	1110	860	834	846	926	892	910	972	936	959
14	1240	929	1080	879	841	857	929	891	914	969	931	955
15	1290	957	1130	863	825	851	932	892	917	968	922	950
16	1230	941	1090	880	834	853	---	---	---	---	---	---
17	1080	954	1020	874	834	859	935	881	918	---	---	---
18	1060	944	1000	868	852	861	934	898	919	---	---	---
19	1040	916	980	862	838	853	975	899	919	---	---	---
20	1110	894	950	854	836	846	928	896	916	---	---	---
21	1090	854	958	894	830	844	929	863	910	---	---	---
22	1070	829	922	850	826	840	937	891	918	956	922	942
23	1020	801	910	---	---	---	932	888	913	965	929	951
24	1060	824	913	928	832	842	931	889	913	975	937	959
25	1020	818	903	854	834	846	932	888	913	984	944	968
26	1090	822	915	854	836	848	936	894	919	988	946	972
27	982	829	898	860	840	851	944	904	936	---	---	---
28	936	842	894	862	846	855	947	911	931	---	---	---
29	966	882	929	866	848	859	952	916	937	---	---	---
30	956	896	932	868	850	861	959	921	943	---	---	---
31	---	---	---	874	854	864	964	926	949	---	---	---
MONTH	1320	801	985	997	825	878	975	842	908	---	---	---

11110500 HOPPER CREEK NEAR PIRU, CALIF.

LOCATION.--Lat 34°24'03", long 118°49'32", in NE¼NE¼SW¼ sec.25, T.4 N., R.19 W., Ventura County, on downstream end of center pier of bridge on State Highway 126, 1 mi (2 km) upstream from mouth, and 2.1 mi (3.4 km) southwest of Piru.

DRAINAGE AREA.--23.6 mi^2 (61.1 km^2).

PERIOD OF RECORD.--October 1930 to September 1932, October 1933 to September 1936, October 1937 to current year.

GAGE.--Water-stage recorder. Concrete control since October 1967. Altitude of gage is 590 ft (180 m), from topographic map.

AVERAGE DISCHARGE.--43 years, 5.42 ft^3/s (0.154 m^3/s), 3,930 acre-ft/yr (4.85 hm^3/yr).

EXTREMES.--Current year: Maximum discharge, 799 ft^3/s (22.6 m^3/s) Dec. 4 (gage height, 6.96 ft or 2.121 m); no flow for several months.

Period of record: Maximum discharge, 8,400 ft^3/s (238 m^3/s) Jan. 25, 1969 (gage height, 12.72 ft or 3.877 m, from floodmarks), from rating curve extended above 850 ft^3/s (24.1 m^3/s) on basis of slope-area measurement of maximum flow; no flow for several months in most years.

REMARKS.--Records fair. No regulation above station. Some pumping along stream for irrigation.

COOPERATION.--Records furnished by Ventura County Flood Control District and reviewed by Geological Survey.

DISCHARGE, IN CUBIC FEET PER SECOND, WATER YEAR OCTOBER 1974 TO SEPTEMBER 1975
MEAN VALUES

DAY	OCT	NOV	DEC	JAN	FEB	MAR	APR	MAY	JUN	JUL	AUG	SEP
1			0	.24	0	0	.37	.64	.02			
2			0	.22	9.2	0	.19	.54	.02			
3			.05	.03	34	0	.17	.45	.07			
4			186	.04	5.0	0	.19	.37	.08			
5			5.7	0	1.7	.40	54	.37	.04			
6			.28	0	.57	166	12	.31	.02			
7			0	0	.12	76	9.1	.31	.02			
8			0	0	.03	207	6.1	.31	.02			
9			0	.02	46	40	12	.24	.03			
10			0	.31	16	19	5.7	.19	.03			
11			0	.17	5.0	14	2.9	.16	.02			
12			0	0	1.5	7.9	2.1	.13	.01			
13			0	0	.87	6.5	1.6	.13	0			
14			0	0	.31	17	1.6	.13	0			
15			0	0	.15	6.5	2.9	.31	0			
16			0	0	.09	4.9	2.1	.37	.02			
17			0	0	.03	2.6	.92	.31	.05			
18			0	0	.01	1.1	1.0	.19	.05			
19			0	0	0	.54	.86	.37	.05			
20			0	0	0	.31	.79	.54	.05			
21			0	0	0	.24	.79	.37	.02			
22			0	0	0	5.6	.86	.31	.01			
23			0	0	0	1.8	.86	.24	0			
24			0	0	0	.87	.94	.16	0			
25			0	0	0	.64	1.0	.11	0			
26			0	0	0	.52	.86	.11	0			
27			0	0	0	.46	.79	.15	0			
28			3.3	0	0	.37	.79	.11	0			
29			3.8	0	---	.30	.69	.03	0			
30			1.0	0	---	.32	.69	.02	0			
31		---	.45	0	---	.37	---	.02	---			---
TOTAL	0	0	200.58	1.03	120.58	581.24	124.86	8.00	.63	0	0	0
MEAN	0	0	6.47	.033	4.31	18.7	4.16	.26	.021	0	0	0
MAX	0	0	186	.31	46	207	54	.64	.08	0	0	0
MIN	0	0	0	0	0	0	.17	.02	0	0	0	0
AC-FT	0	0	398	2.0	239	1150	248	16	1.2	0	0	0

CAL YR 1974 TOTAL 1177.04 MEAN 3.22 MAX 392 MIN 0 AC-FT 2330
WTR YR 1975 TOTAL 1036.92 MEAN 2.84 MAX 207 MIN 0 AC-FT 2060

Peak discharge (base, 150 ft^3/s)

Date	Time	G.H.	Discharge	Date	Time	G.H.	Discharge
12-4	0330	6.96	799	3-8	0400	6.57	554
3-6	0515	6.34	405	4-5	1330	6.10	243

11111500 SESPE CREEK NEAR WHEELER SPRINGS, CALIF.

LOCATION.--Lat 34°34'40", long 119°15'25", in SE¼NW¼SW¼ sec.30, T.6 N., R.22 W., Ventura County, on right bank at Sespe Gorge, 1.6 mi (2.6 km) upstream from Tule Creek, 5 mi (8 km) upstream from Cold Springs damsite, and 5 mi (8 km) northeast of Wheeler Springs.

DRAINAGE AREA.--49.5 mi^2 (128.2 km^2).

PERIOD OF RECORD.--October 1947 to current year. Daily discharge for period October 1947 to July 1948 estimated on basis of weather records and records for North Fork Matilija Creek.

GAGE.--Water-stage recorder. Datum of gage is 3,500.65 ft (1,066.998 m) above mean sea level (levels by Ventura County Flood Control District).

AVERAGE DISCHARGE.--28 years (1947-75), 10.4 ft^3/s (0.295 m^3/s), 7,530 acre-ft/yr (9.28 hm^3/yr).

EXTREMES.--Current year: Maximum discharge, 1,340 ft^3/s (37.9 m^3/s) Mar. 7 (gage height, 6.44 ft or 1.963 m); minimum daily, 0.06 ft^3/s (0.002 m^3/s) Oct. 10.
Period of record: Maximum discharge, 9,700 ft^3/s (275 m^3/s) Jan. 25, 1969 (gage height, 13.60 ft or 4.145 m), from rating curve extended above 3,000 ft^3/s (85.0 m^3/s) on basis of slope-area measurement of maximum flow; no flow many days in some years.

REMARKS.--Records good. No regulation or diversion above station.

DISCHARGE, IN CUBIC FEET PER SECOND, WATER YEAR OCTOBER 1974 TO SEPTEMBER 1975
MEAN VALUES

DAY	OCT	NOV	DEC	JAN	FEB	MAR	APR	MAY	JUN	JUL	AUG	SEP
1	.17	.40	1.0	1.6	2.0	2.5	11	7.8	3.7	1.4	.29	.17
2	.17	.40	1.0	1.8	5.1	2.5	11	7.3	3.4	1.3	.24	.17
3	.17	.36	8.9	1.8	9.8	2.5	11	8.4	3.4	1.5	.24	.17
4	.17	.40	118	2.1	6.5	2.5	10	6.8	3.4	1.3	.24	.17
5	.17	.49	7.3	2.1	6.0	34	17	6.8	3.1	1.2	.24	.17
6	.17	.51	3.7	2.6	4.9	156	17	7.8	3.3	1.2	.24	.17
7	.17	.51	2.5	2.6	3.9	659	16	9.5	3.2	1.2	.24	.17
8	.20	.60	2.0	2.1	3.4	669	14	9.5	3.0	1.0	.24	.17
9	.15	.58	1.8	2.1	31	136	14	8.9	2.8	1.0	.24	.17
10	.06	.55	1.4	2.1	27	93	13	7.3	2.7	1.0	.24	.17
11	.09	.58	1.4	2.1	14	64	12	8.4	2.8	.88	.24	.17
12	.14	.51	1.2	1.9	7.8	52	12	8.9	2.8	.88	.24	.17
13	.21	.51	1.2	1.9	6.0	46	11	7.8	2.8	.88	.24	.17
14	.20	.51	1.4	1.8	5.1	44	12	8.4	2.4	.88	.24	.17
15	.27	.57	1.4	1.5	4.4	38	13	8.4	1.7	.74	.24	.17
16	.34	.60	1.0	1.5	3.7	35	12	7.8	1.4	.74	.24	.24
17	.29	.61	1.0	1.5	3.4	30	12	7.8	1.5	.88	.24	.31
18	.35	.64	1.0	1.5	3.1	28	11	8.9	2.0	.74	.24	.24
19	.39	.74	1.0	1.5	3.1	27	10	8.4	2.8	.74	.24	.17
20	.53	.74	1.2	1.5	3.1	24	10	8.4	2.9	.74	.24	.17
21	.50	.73	1.0	1.4	3.1	22	9.8	7.8	2.2	.74	.24	.17
22	.47	.83	1.2	1.5	3.4	25	10	7.8	1.8	.74	.24	.17
23	.45	.88	1.0	1.6	3.4	17	10	7.3	1.7	.61	.24	.17
24	.43	.88	1.0	1.5	3.4	16	9.5	7.8	1.8	.50	.24	.17
25	.41	.87	1.0	1.5	2.8	16	9.2	7.3	1.7	.40	.24	.17
26	.40	.88	1.2	1.5	2.8	15	9.8	7.8	1.6	.40	.24	.17
27	.45	.88	1.2	1.6	2.5	14	8.9	6.8	1.4	.40	.24	.24
28	.35	.88	4.4	1.6	2.5	13	8.4	6.4	1.3	.39	.24	.17
29	.33	1.0	2.0	1.5	---	12	8.9	4.7	1.5	.37	.17	.17
30	.32	1.0	1.8	1.5	---	11	8.9	5.1	1.4	.34	.17	.17
31	.37	---	1.6	1.6	---	11	---	4.4	---	.34	.17	---
TOTAL	8.89	19.64	176.8	54.4	177.2	2317.0	342.4	236.5	71.5	25.43	7.28	5.45
MEAN	.29	.65	5.70	1.75	6.33	74.7	11.4	7.63	2.38	.82	.23	.18
MAX	.53	1.0	118	2.6	31	669	17	9.5	3.7	1.5	.29	.31
MIN	.06	.36	1.0	1.4	2.0	2.5	8.4	4.4	1.3	.34	.17	.17
AC-FT	18	39	351	108	351	4600	679	469	142	50	14	11

CAL YR 1974 TOTAL 2564.16 MEAN 7.03 MAX 118 MIN .03 AC-FT 5090
WTR YR 1975 TOTAL 3442.49 MEAN 9.43 MAX 669 MIN .06 AC-FT 6830

Peak discharge (base, 50 ft^3/s)

Date	Time	G.H.	Discharge	Date	Time	G.H.	Discharge
12-4	0330	4.95	585	3-6	0115	3.95	257
2-9	1215	2.84	60	3-7	2230	6.44	1,340

11111500 SESPE CREEK NEAR WHEELER SPRINGS, CALIF.--Continued

PERIOD OF RECORD.--Water temperatures: February 1962 to current year.
Sediment records: Water year 1956 (partial-record station).

EXTREMES.--Current year:
Water temperatures: Maximum recorded, 26.0°C July 24, 26; minimum, 1.0°C Dec. 23, 24, Jan. 3, Mar. 24.
Period of record:
Water temperatures: Maximum, 29.0°C Aug. 11, 1964; minimum, freezing point on several days in 1970 and 1971.

REMARKS.--Periods of missing specific conductance data due to equipment malfunction or probe not in contact with water.

TEMPERATURE (DEG. C) OF WATER, WATER YEAR OCTOBER 1974 TO SEPTEMBER 1975

	OCTOBER			NOVEMBER			DECEMBER			JANUARY		
DAY	MAX	MIN	MEAN	MAX	MIN	MEAN	MAX	MIN	MEAN	MAX	MIN	MEAN
1	---	---	---	10.0	7.0	8.5	7.0	4.0	5.5	5.0	1.5	3.0
2	---	---	---	11.0	7.0	9.0	9.0	4.0	6.5	5.5	2.0	3.5
3	---	---	---	10.5	6.5	9.0	9.0	7.0	8.0	5.0	1.0	3.0
4	---	---	---	9.5	5.5	8.0	9.5	7.0	8.5	6.5	2.5	4.5
5	---	---	---	10.0	6.0	8.0	8.5	6.0	7.0	7.0	3.0	5.0
6	---	---	---	10.0	6.0	8.0	8.5	5.0	6.5	8.5	4.5	6.5
7	---	---	---	10.0	5.5	8.0	9.0	5.5	7.5	9.5	6.0	7.5
8	---	---	---	10.5	6.5	8.0	8.0	5.0	6.5	9.0	4.0	7.0
9	16.5	10.0	13.0	10.0	6.0	8.0	6.5	3.0	5.0	4.5	2.0	3.0
10	17.0	10.5	13.5	11.0	6.5	9.0	7.5	3.5	5.0	7.0	3.0	5.0
11	17.5	11.5	14.0	10.0	6.5	8.5	9.0	4.5	7.0	7.0	4.5	5.5
12	---	---	---	10.5	6.5	8.5	10.5	7.0	8.5	7.5	3.5	5.5
13	---	---	---	11.0	7.0	9.0	9.0	6.0	7.0	7.5	4.0	6.0
14	---	---	---	10.5	7.5	9.5	8.5	5.0	7.0	8.0	4.0	6.0
15	---	---	---	11.5	8.0	10.0	10.0	6.5	8.0	9.0	4.0	6.5
16	---	---	---	11.0	7.5	9.5	9.5	5.5	7.5	8.5	5.0	6.5
17	---	---	---	10.5	7.5	9.0	10.0	6.0	7.5	8.5	4.5	6.5
18	---	---	---	10.5	7.0	8.5	7.5	3.5	5.5	9.5	4.5	7.0
19	---	---	---	11.0	7.0	9.0	8.0	4.5	6.5	9.5	5.0	7.5
20	---	---	---	11.0	7.0	9.0	10.0	6.0	7.5	9.5	5.0	7.5
21	---	---	---	11.0	8.0	9.5	8.5	4.5	6.5	10.0	6.0	8.0
22	---	---	---	10.5	6.5	9.0	6.5	1.5	4.5	9.0	4.5	7.0
23	---	---	---	8.0	5.0	6.5	4.0	1.0	2.0	9.0	5.0	7.0
24	---	---	---	8.0	4.5	6.0	4.0	1.0	2.5	10.5	5.5	8.0
25	---	---	---	8.0	4.5	6.5	5.0	1.5	3.0	10.5	5.5	8.0
26	---	---	---	7.5	4.0	6.0	5.0	2.0	3.5	9.5	5.5	7.5
27	---	---	---	8.0	4.0	6.0	5.5	2.5	4.0	---	---	---
28	---	---	---	7.5	4.5	6.0	---	---	---	---	---	---
29	---	---	---	7.5	3.0	5.0	5.0	2.5	3.5	---	---	---
30	12.0	7.5	10.0	8.0	4.0	6.0	5.0	1.5	3.5	---	---	---
31	11.0	8.5	9.5	---	---	---	3.5	2.0	3.0	---	---	---
MONTH	---	---	---	11.5	3.0	8.0	10.5	1.0	6.0	10.5	1.0	6.0

11111500 SESPE CREEK NEAR WHEELER SPRINGS, CALIF.--Continued

TEMPERATURE (DEG. C) OF WATER, WATER YEAR OCTOBER 1974 TO SEPTEMBER 1975

	FEBRUARY			MARCH			APRIL			MAY		
DAY	MAX	MIN	MEAN	MAX	MIN	MEAN	MAX	MIN	MEAN	MAX	MIN	MEAN
1	---	---	---	9.5	4.0	6.5	10.5	4.0	7.5	17.5	9.5	13.5
2	---	---	---	8.5	1.5	5.5	10.5	5.0	7.5	18.5	10.5	14.5
3	---	---	---	11.0	2.5	5.0	11.0	5.0	8.5	19.0	10.5	14.5
4	---	---	---	7.0	2.5	5.0	11.0	7.0	9.0	16.0	9.0	12.5
5	---	---	---	---	---	---	9.5	4.5	7.0	15.5	6.5	11.0
6	10.5	7.0	8.5	---	---	---	9.5	4.5	6.0	17.0	8.0	12.0
7	10.0	7.5	8.5	---	---	---	9.5	4.5	7.0	18.0	8.5	13.0
8	9.5	6.5	8.5	---	---	---	9.5	5.5	7.5	18.5	9.0	13.5
9	8.5	3.0	8.5	---	---	---	9.5	7.0	8.5	19.5	10.0	14.5
10	8.5	7.5	8.0	---	---	---	10.5	6.0	8.5	19.5	9.5	14.5
11	9.0	7.5	8.0	---	---	---	9.5	7.5	8.5	20.5	12.0	16.0
12	8.5	7.0	8.0	---	---	---	12.5	6.5	9.5	21.0	11.0	16.0
13	10.0	7.5	8.5	10.0	2.5	6.5	12.5	5.5	9.5	20.5	11.5	16.0
14	10.0	6.5	8.5	10.0	3.0	6.0	10.5	5.0	8.5	20.0	10.0	15.0
15	9.0	5.0	7.5	11.0	2.5	7.5	10.0	5.0	8.0	20.5	11.0	15.5
16	9.0	5.0	7.0	10.0	2.0	7.5	---	---	---	20.5	11.5	15.5
17	9.0	5.5	7.0	11.5	2.5	6.5	---	---	---	20.5	12.5	16.0
18	9.5	6.0	7.0	11.0	2.5	7.0	---	---	---	20.5	14.0	17.0
19	10.0	6.5	8.0	12.0	4.0	8.5	---	---	---	21.0	13.0	17.0
20	10.5	6.5	8.0	12.0	4.0	8.5	---	---	---	16.0	10.5	13.5
21	7.5	4.0	6.0	10.0	4.0	8.0	---	---	---	16.5	8.5	12.5
22	8.5	5.0	6.5	10.5	3.0	7.5	---	---	---	18.5	10.0	14.5
23	10.0	5.5	7.5	9.5	2.0	5.5	---	---	---	20.0	11.5	15.5
24	10.0	6.0	8.0	12.5	1.0	8.0	---	---	---	21.0	12.0	16.5
25	11.0	5.5	8.5	12.0	7.0	9.5	15.0	9.0	12.0	21.5	13.0	17.5
26	11.0	5.0	7.5	7.0	2.0	4.5	13.0	5.5	9.5	21.5	13.0	17.0
27	10.0	3.5	6.5	8.0	2.5	5.5	16.0	7.0	11.5	21.5	13.5	17.0
28	10.0	2.5	6.0	---	---	---	16.5	8.5	12.5	22.0	14.0	17.5
29	---	---	---	---	---	---	17.0	8.5	12.5	21.5	13.5	17.0
30	---	---	---	12.0	5.0	8.5	17.5	9.0	13.0	21.5	13.0	17.0
31	---	---	---	9.5	6.0	7.5	---	---	---	22.5	13.5	17.5
MONTH	11.0	2.5	7.5	---	---	---	---	---	---	22.5	6.5	15.0

	JUNE			JULY			AUGUST			SEPTEMBER		
DAY	MAX	MIN	MEAN	MAX	MIN	MEAN	MAX	MIN	MEAN	MAX	MIN	MEAN
1	23.0	14.0	17.5	23.0	13.0	18.0	23.0	13.0	18.0	---	---	---
2	22.5	13.5	17.0	22.5	13.0	17.5	23.0	15.0	18.5	---	---	---
3	21.0	13.5	16.5	23.0	13.0	17.5	24.5	14.0	18.5	---	---	---
4	23.5	12.0	16.5	21.0	11.5	17.0	24.5	14.0	18.0	---	---	---
5	23.5	13.0	18.0	22.0	11.5	17.0	---	---	---	---	---	---
6	23.5	15.0	19.0	23.0	13.0	18.5	---	---	---	---	---	---
7	23.5	14.5	18.5	24.0	14.5	19.5	---	---	---	---	---	---
8	24.0	13.5	18.5	24.0	16.0	20.0	---	---	---	20.0	15.5	18.0
9	23.5	14.5	19.0	24.5	17.0	20.5	---	---	---	20.0	16.0	18.5
10	23.0	14.0	18.5	25.0	17.0	21.0	---	---	---	22.0	15.0	18.5
11	23.0	13.5	18.5	25.0	17.5	21.0	---	---	---	22.0	15.5	18.5
12	23.0	13.0	18.0	24.0	16.5	19.5	---	---	---	20.0	15.5	18.5
13	23.5	13.0	18.5	23.5	14.5	18.0	---	---	---	22.0	15.5	19.0
14	24.5	14.5	19.5	21.5	12.5	16.5	---	---	---	21.5	15.0	18.5
15	23.0	15.5	19.5	21.5	13.5	17.0	---	---	---	21.0	14.0	17.5
16	24.0	15.0	19.0	23.5	15.0	18.5	---	---	---	21.5	15.0	18.5
17	22.5	14.0	18.0	24.0	15.5	19.0	---	---	---	24.0	18.0	21.0
18	21.0	12.5	17.0	24.0	14.5	18.5	---	---	---	23.5	18.0	20.5
19	16.0	13.0	13.5	23.5	15.5	18.5	---	---	---	23.0	16.5	20.0
20	21.0	11.0	15.5	24.5	15.5	19.0	---	---	---	22.0	16.0	19.0
21	23.0	13.0	18.0	24.0	15.5	19.0	---	---	---	21.0	14.0	18.0
22	23.0	14.5	18.5	23.5	14.0	18.0	---	---	---	21.0	14.0	17.5
23	22.0	13.5	17.5	24.5	14.0	18.5	---	---	---	20.5	14.0	17.0
24	21.5	12.0	16.5	26.0	15.0	19.0	---	---	---	20.5	13.0	16.5
25	22.0	11.5	16.5	24.0	14.5	19.5	---	---	---	19.5	13.0	16.0
26	22.0	11.5	16.5	26.0	14.5	20.0	---	---	---	18.5	12.5	15.5
27	23.0	13.5	18.0	25.5	15.0	19.5	---	---	---	19.0	13.0	15.5
28	23.0	13.0	18.0	24.5	14.5	19.5	---	---	---	18.5	12.5	15.5
29	23.0	14.0	18.5	24.0	16.0	19.5	---	---	---	19.0	13.0	15.5
30	23.0	14.0	18.5	24.0	15.5	19.0	---	---	---	19.0	13.0	16.0
31	---	---	---	23.5	13.5	17.5	---	---	---	---	---	---
MONTH	24.5	11.0	18.0	26.0	11.5	18.5	---	---	---	---	---	---

11113000 SESPE CREEK NEAR FILLMORE, CALIF.

LOCATION.--Lat 34°27'03", long 118°55'30", in NE¼NW¼NE¼ sec.12, T.4 N., R.20 W., Ventura County, on right bank 0.1 mi (0.2 km) downstream from Little Sespe Creek, and 3.5 mi (5.6 km) north of Fillmore.

DRAINAGE AREA.--251 mi^2 (650 km^2).

PERIOD OF RECORD.--September 1911 to September 1913, October 1927 to current year; combined records of creek and canal, October 1927 to current year. Prior to 1935, published as "at Sespe."

GAGE.--Water-stage recorder on creek; water-stage recorder and Parshall flume on canal. Altitude of gage is 580 ft (177 m), from topographic map. See WSP 1315-B for history of changes prior to Jan. 17, 1946.

AVERAGE DISCHARGE (Creek only).--50 years, 104 ft^3/s (2.945 m^3/s), 75,350 acre-ft/yr (92.9 hm^3/yr).
(Combined creek and canal).--48 years, 110 ft^3/s (3.115 m^3/s), 79,700 acre-ft/yr (98.3 hm^3/yr).

EXTREMES (Creek only).--Current year: Maximum discharge, 7,210 ft^3/s (204 m^3/s) Mar. 8 (gage height, 16.28 ft or 4.962 m); minimum daily, 0.46 ft^3/s (0.013 m^3/s) Sept. 25.
Period of record: Maximum discharge, 60,000 ft^3/s (1,700 m^3/s) Jan. 25, 1969 (gage height, 20.80 ft or 6.340 m), from rating curve extended above 22,000 ft^3/s (623 m^3/s) on basis of slope-area measurement at gage height 19.0 ft (5.79 m); maximum gage height, 24.95 ft (7.605 m) Feb. 25, 1969 (from debris wave); no flow at times in some years.
(Combined flow).--Current year: Maximum discharge, 7,210 ft^3/s (204 m^3/s) Mar. 8; minimum daily, 4.9 ft^3/s (0.14 m^3/s) Oct. 2.
Period of record: Maximum discharge, 60,000 ft^3/s (1,700 m^3/s) Jan. 25, 1969; minimum daily, 1.1 ft^3/s (0.031 m^3/s) July 31, Aug. 2, 1951.

REMARKS.--Records good. No regulation above station. Fillmore Irrigation Co. has diverted water 1 mi (2 km) upstream since September 1911. For records of combined discharge of Sespe Creek and Fillmore Irrigation Co.'s canal, see following page.

DISCHARGE, IN CUBIC FEET PER SECOND, WATER YEAR OCTOBER 1974 TO SEPTEMBER 1975
MEAN VALUES

DAY	OCT	NOV	DEC	JAN	FEB	MAR	APR	MAY	JUN	JUL	AUG	SEP
1	.58	5.8	1.4	27	15	30	103	81	24	7.1	.90	.49
2	.52	4.9	1.3	24	110	30	96	79	22	6.8	1.0	.48
3	.64	4.2	12	23	373	28	92	77	20	6.5	1.2	.49
4	.78	3.6	2530	22	188	27	89	76	21	6.7	1.5	.48
5	.71	3.1	208	22	114	150	287	72	20	6.5	1.5	.49
6	.71	2.6	77	22	84	2920	273	71	19	6.4	1.7	.49
7	4.3	2.2	40	21	65	3320	206	69	18	6.4	1.7	.48
8	8.7	1.9	35	22	56	5110	177	63	17	6.0	1.7	.49
9	6.6	1.6	33	21	399	1330	172	59	17	5.4	1.6	.49
10	1.7	1.4	29	21	459	697	163	56	16	4.9	1.5	.49
11	1.6	1.2	27	21	264	487	152	56	15	3.9	1.4	.49
12	1.3	1.1	27	20	178	353	144	53	19	2.6	1.3	.49
13	1.3	1.1	27	20	139	299	145	52	22	2.2	1.3	.49
14	1.1	1.1	25	19	113	305	148	49	14	2.6	1.3	.50
15	1.0	1.3	24	19	99	250	155	47	13	2.5	1.2	.55
16	.92	1.3	23	19	88	230	140	46	14	2.3	1.1	.56
17	.78	1.6	23	18	75	210	130	45	13	2.1	1.1	.55
18	.65	1.9	22	18	65	195	120	43	13	2.0	1.0	.53
19	.76	1.3	22	18	60	191	114	43	14	1.8	.90	.53
20	1.0	1.3	22	18	56	186	111	41	15	2.3	.60	.48
21	1.1	1.3	21	18	51	170	110	39	15	1.8	.58	.50
22	.92	1.3	21	17	46	178	109	39	15	1.4	.57	.55
23	.86	1.5	21	16	43	160	109	36	14	2.4	.55	.52
24	.91	1.6	20	17	41	155	105	34	13	4.1	.54	.47
25	.99	1.2	20	17	39	145	102	34	12	2.1	.55	.46
26	1.0	1.2	20	17	38	135	97	31	9.9	1.2	.55	.49
27	1.1	1.6	20	16	34	125	92	29	8.6	1.3	.54	.49
28	5.6	1.6	83	14	32	117	87	27	8.0	1.2	.55	.63
29	7.6	2.3	52	13	---	112	83	24	7.9	.90	.55	.56
30	7.1	1.8	35	14	---	106	82	22	7.7	.80	.54	.56
31	6.6	---	31	13	---	103	---	26	---	.90	.49	---
TOTAL	69.43	59.9	3552.7	587	3324	17854	3993	1519	457.1	105.10	31.51	15.27
MEAN	2.24	2.00	115	18.9	119	576	133	49.0	15.2	3.39	1.02	.51
MAX	8.7	5.8	2530	27	459	5110	287	81	24	7.1	1.7	.63
MIN	.52	1.1	1.3	13	15	27	82	22	7.7	.80	.49	.46
AC-FT	138	119	7050	1160	6590	35410	7920	3010	907	208	63	30

CAL YR 1974 TOTAL 28284.29 MEAN 77.5 MAX 4410 MIN .27 AC-FT 56100
WTR YR 1975 TOTAL 31568.01 MEAN 86.5 MAX 5110 MIN .46 AC-FT 62620

Peak discharge (base, 1,300 ft^3/s).--Dec. 4 (0215) 5,140 ft^3/s (15.31 ft); Mar. 8 (0930) 7,210 ft^3/s (16.28 ft).

NOTE.--No gage-height record July 17 to Aug. 19.

11113000 SESPE CREEK NEAR FILLMORE, CALIF.--Continued

COMBINED DISCHARGE, IN CUBIC FEET PER SECOND, OF SESPE CREEK AND FILLMORE IRRIGATION CO.'S CANAL NEAR FILLMORE, CALIF., WATER YEAR OCTOBER 1974 TO SEPTEMBER 1975

DAY	OCT	NOV	DEC	JAN	FEB	MAR	APR	MAY	JUN	JUL	AUG	SEP
1	5.0	9.5	8.6	27	21	30	103	82	29	16	8.1	6.1
2	4.9	11	8.6	24	114	30	96	80	29	15	8.0	6.1
3	5.1	9.8	16	23	373	28	92	78	28	15	8.0	5.9
4	5.5	9.4	2530	22	188	27	90	77	29	15	8.0	5.9
5	5.5	9.4	208	22	114	150	288	73	28	14	7.9	5.9
6	5.4	8.6	77	22	84	2920	273	72	27	14	7.9	5.9
7	7.5	8.0	40	21	65	3320	206	69	27	14	7.8	5.9
8	8.7	8.1	35	22	56	5110	177	66	25	14	7.8	6.1
9	8.2	7.8	33	22	399	1330	172	64	26	13	7.7	6.3
10	7.4	7.6	29	22	459	697	163	61	25	12	7.7	6.4
11	6.9	7.0	27	22	264	487	152	60	23	11	7.6	6.4
12	6.4	6.9	27	21	178	353	144	58	22	12	7.6	6.4
13	6.0	7.2	27	21	139	299	145	57	23	11	7.6	6.4
14	5.9	7.3	25	20	113	305	148	54	22	11	7.5	6.4
15	5.6	7.6	24	20	99	250	155	52	21	11	7.4	6.2
16	5.4	7.7	23	20	88	230	140	53	22	10	7.4	6.2
17	5.3	7.4	23	18	75	210	130	52	21	10	7.4	6.1
18	5.2	7.8	22	18	65	195	120	50	21	11	7.3	6.0
19	5.3	7.9	22	18	60	191	114	50	21	10	7.3	5.9
20	5.5	7.8	22	18	56	186	111	49	23	10	7.1	5.8
21	5.9	8.0	21	18	51	170	111	47	23	9.8	7.1	5.6
22	5.9	8.4	21	18	46	178	110	48	23	9.6	7.0	5.5
23	5.9	8.0	21	18	43	160	110	45	22	9.4	6.7	5.4
24	6.0	8.1	20	17	41	155	106	42	21	9.3	6.4	5.2
25	6.0	8.0	20	18	39	145	103	41	20	9.0	6.4	5.2
26	6.1	7.8	20	18	38	135	97	37	19	8.8	6.4	5.2
27	5.9	8.1	20	18	35	125	93	36	18	8.7	6.3	5.3
28	7.5	7.9	83	19	33	117	88	35	17	8.6	6.3	5.6
29	7.6	8.3	52	18	---	112	84	32	17	8.3	6.4	5.7
30	7.1	8.6	35	19	---	106	83	30	16	8.2	6.2	5.7
31	6.6	---	31	19	---	103	---	31	---	8.2	6.1	---
TOTAL	191.2	245.0	3571.2	623	3336	17854	4004	1681	688	346.9	224.4	176.7
MEAN	6.17	8.17	115	20.1	119	576	133	54.2	22.9	11.2	7.24	5.89
MAX	8.7	11	2530	27	459	5110	288	82	29	16	8.1	6.4
MIN	4.9	6.9	8.6	17	21	27	83	30	16	8.2	6.1	5.2
AC-FT	379	486	7080	1240	6620	35410	7940	3330	1360	688	445	350

CAL YR 1974 TOTAL 29662.8 MEAN 81.3 MAX 4410 MIN 4.2 AC-FT 58840
WTR YR 1975 TOTAL 32941.4 MEAN 90.3 MAX 5110 MIN 4.9 AC-FT 65340

Peak discharge (base, 1,300 ft^3/s).--Dec. 4 (0215) 5,140 ft^3/s; Mar. 8 (0930) 7,210 ft^3/s.

11113000 SESPE CREEK NEAR FILLMORE, CALIF.--Continued

PERIOD OF RECORD.--Chemical analyses: October 1966 to current year.
Specific conductance: October 1969 to current year.
Water temperatures: October 1966 to current year.
Sediment records: Water years 1956-62 (partial-record station), October 1966 to current year.

EXTREMES.--Current year:
Specific conductance: Maximum recorded, 1,100 micromhos Nov. 26, 27, Dec. 3, 21; minimum recorded, 317 micromhos Feb. 2.
Sediment concentrations: Maximum daily, 7,720 mg/l Dec. 4; minimum daily, 2 mg/l on many days.
Sediment discharge: Maximum daily, 87,000 tons (78,900 tonnes) Dec. 4; minimum daily, 0 tons (0 tonnes) on many days.
Period of record:
Specific conductance: Maximum, 1,360 micromhos July 27, 1970; minimum (1970 to current year), 185 micromhos Dec. 25, 1971.
Water temperatures (1969-70): Maximum, 29.5°C July 4, 18, 20, 1970; minimum, 4.5°C Jan. 4, 1970.
Sediment concentrations: Maximum daily, 31,800 mg/l Jan. 25, 1969; minimum daily, 1 mg/l on many days in 1966-69.
Sediment discharge: Maximum daily, 2,950,000 tons (2,680,000 tonnes) Jan. 25, 1969; minimum daily, 0 tons (0 tonnes) on many days in most years.

REMARKS.--Chemical-quality records furnished by California Department of Water Resources. Periods of missing specific conductance data due to probe silted or not in contact with water.

WATER QUALITY DATA, WATER YEAR OCTOBER 1974 TO SEPTEMBER 1975

DATE	TIME	INSTANTANEOUS DISCHARGE (CFS)	DISSOLVED IRON (FE) (UG/L)	DISSOLVED SULFATE (SO4) (MG/L)	DISSOLVED CHLORIDE (CL) (MG/L)	DISSOLVED SOLIDS (RESIDUE AT 180 C) (MG/L)	DISSOLVED SOLIDS (TONS PER AC-FT)	HARDNESS (CA,MG) (MG/L)	SPECIFIC CONDUCTANCE (MICROMHOS)	PH (UNITS)
NOV.										
19...	1130	1.3	--	229	106	706	.96	355	1000	8.2
JAN.										
21...	1145	18	--	305	56	790	1.07	418	1000	8.4
APR.										
22...	1030	110	--	239	14	537	.73	347	725	8.4
MAY										
21...	1020	40	10	--	--	--	--	--	--	--
JULY										
22...	1015	2.4	--	300	44	809	1.10	382	950	8.3

DATE	TEMPERATURE (DEG C)	TURBIDITY (JTU)	DISSOLVED OXYGEN (MG/L)	DISSOLVED ARSENIC (AS) (UG/L)	DISSOLVED CADMIUM (CD) (UG/L)	DISSOLVED COPPER (CU) (UG/L)	DISSOLVED LEAD (PB) (UG/L)	TOTAL MERCURY (HG) (UG/L)	DISSOLVED ZINC (ZN) (UG/L)
NOV.									
19...	16.0	4	10.6	--	--	--	--	--	--
JAN.									
21...	13.0	1	10.9	--	--	--	--	--	--
APR.									
22...	14.0	2	10.4	--	--	--	--	--	--
MAY									
21...	15.5	--	--	0	0	0	0	.0	0
JULY									
22...	23.5	0	13.0	--	--	--	--	--	--

11113000 SESPE CREEK NEAR FILLMORE, CALIF.--Continued

SPECIFIC CONDUCTANCE (MICROMHOS/CM AT 25 DEG. C), WATER YEAR OCTOBER 1974 TO SEPTEMBER 1975

	OCTOBER			NOVEMBER			DECEMBER			JANUARY		
DAY	MAX	MIN	MEAN	MAX	MIN	MEAN	MAX	MIN	MEAN	MAX	MIN	MEAN
1	905	879	893	1000	976	990	1090	1070	1080	1040	996	1020
2	907	884	897	1010	994	1000	1090	1070	1080	1050	1010	1030
3	904	889	898	1010	993	1000	1100	793	1050	1050	1010	1030
4	909	902	905	1020	988	1000	---	---	---	1070	1010	1040
5	914	903	909	1020	1010	1010	---	---	---	1080	1030	1050
6	916	908	912	1030	1010	1020	---	---	---	1080	1030	1050
7	982	917	937	1030	1010	1020	---	---	---	1080	1050	1060
8	945	933	941	---	---	---	---	---	---	1060	1040	1050
9	961	939	952	1020	1010	1020	---	---	---	1060	1000	1030
10	1000	947	968	1030	1010	1020	---	---	---	1040	995	1020
11	1010	990	1000	1030	1020	1030	1070	1040	1050	1040	1010	1020
12	1000	991	997	1040	1010	1030	1060	1010	1040	1050	1010	1030
13	1000	988	995	1050	1040	1040	1030	1010	1020	1050	1010	1030
14	1000	993	996	1050	1030	1040	1050	1020	1030	1060	1000	1040
15	1010	990	998	1050	1030	1050	1060	1030	1040	1060	1020	1040
16	1010	991	998	1050	1040	1050	1070	1040	1050	1070	1030	1050
17	1020	981	1000	1050	1040	1050	1070	1050	1060	1080	1040	1060
18	1010	962	992	1050	1040	1050	1080	1050	1060	1070	1040	1060
19	1020	981	1000	1050	1050	1050	1090	1050	1070	1070	1040	1050
20	1020	992	1000	1050	1050	1050	1090	1050	1080	1070	1040	1050
21	1010	996	1000	1060	1050	1050	1100	1070	1080	1060	1030	1050
22	1010	988	997	1060	1040	1060	1090	1060	1070	1060	1030	1040
23	1000	951	991	1050	1040	1050	1080	1050	1060	1060	1030	1050
24	992	966	981	1070	1050	1060	1070	1040	1050	1070	1010	1040
25	973	958	966	1080	1060	1070	1080	1040	1060	1080	1020	1040
26	987	968	980	1100	1080	1090	1070	983	1030	1070	1020	1040
27	1000	982	991	1100	1080	1090	1060	1030	1050	1060	1010	1040
28	1020	931	980	1090	1080	1080	1090	758	938	1070	1000	1040
29	987	968	980	1090	1070	1080	977	898	948	1060	1000	1040
30	993	979	986	1080	1070	1080	996	965	983	1050	1020	1030
31	985	977	980	---	---	---	1010	992	1000	1040	1010	1020
MONTH	1020	879	968	1100	976	1040	---	---	---	1080	995	1040

	FEBRUARY			MARCH			APRIL			MAY		
DAY	MAX	MIN	MEAN	MAX	MIN	MEAN	MAX	MIN	MEAN	MAX	MIN	MEAN
1	1010	1000	1010	916	878	895	---	---	---	766	722	740
2	1080	317	831	912	882	896	---	---	---	758	666	721
3	---	---	---	908	878	896	---	---	---	746	666	718
4	688	620	658	905	886	894	792	740	770	742	678	725
5	794	658	705	---	---	---	784	392	604	746	682	716
6	851	789	825	---	---	---	664	516	617	746	658	714
7	873	839	858	---	---	---	672	572	630	754	654	715
8	879	845	863	---	---	---	684	648	669	754	658	720
9	---	---	---	---	---	---	708	656	693	758	634	712
10	667	435	513	---	---	---	696	640	676	805	614	703
11	649	557	599	---	---	---	700	676	691	---	---	---
12	716	648	686	---	---	---	712	688	701	---	---	---
13	744	716	732	---	---	---	712	684	699	---	---	---
14	768	748	757	650	602	629	708	676	690	---	---	---
15	766	738	752	668	636	652	684	648	665	---	---	---
16	747	731	737	690	670	678	684	664	674	756	728	736
17	749	717	732	696	668	682	696	680	687	748	724	734
18	743	711	726	722	694	710	712	680	699	756	720	735
19	737	705	722	728	712	719	724	688	711	740	732	735
20	742	698	715	711	687	699	724	708	717	760	712	738
21	---	---	---	693	677	683	728	708	719	748	724	736
22	---	---	---	695	667	677	720	700	712	791	732	754
23	---	---	---	690	670	680	710	694	703	---	---	---
24	---	---	---	716	676	697	698	686	692	---	---	---
25	---	---	---	727	711	715	710	686	698	---	---	---
26	905	870	887	715	671	686	714	690	699	---	---	---
27	908	874	892	704	680	690	718	690	702	---	---	---
28	912	882	894	732	648	699	730	702	716	---	---	---
29	---	---	---	752	652	702	742	706	725	758	730	749
30	---	---	---	768	564	693	746	722	733	762	730	749
31	---	---	---	780	608	735	---	---	---	758	726	744
MONTH	---	---	---	---	---	---	792	392	692	---	---	---

11113000 SESPE CREEK NEAR FILLMORE, CALIF.--Continued

SPECIFIC CONDUCTANCE (MICROMHOS/CM AT 25 DEG. C), WATER YEAR OCTOBER 1974 TO SEPTEMBER 1975

	JUNE			JULY			AUGUST			SEPTEMBER		
DAY	MAX	MIN	MEAN	MAX	MIN	MEAN	MAX	MIN	MEAN	MAX	MIN	MEAN
1	754	726	744	839	760	803	1010	916	957	942	902	920
2	758	738	749	848	785	814	1010	918	957	941	903	920
3	758	750	755	857	743	809	1010	927	960	938	898	917
4	762	746	754	859	744	810	1020	929	964	932	898	913
5	762	742	757	860	741	809	1010	930	964	932	898	914
6	763	743	756	846	731	812	1000	922	957	934	902	916
7	768	740	758	851	744	810	989	925	951	940	902	918
8	768	744	760	853	745	819	994	922	951	940	902	921
9	773	745	762	858	739	809	994	914	950	934	912	924
10	778	738	763	832	744	773	987	917	947	938	914	927
11	775	743	763	848	766	810	998	926	952	936	900	919
12	779	723	753	914	806	848	995	927	951	940	904	922
13	772	724	749	946	840	885	991	925	953	938	908	923
14	777	737	763	872	798	835	986	920	950	936	896	916
15	786	742	768	882	802	846	988	918	948	942	890	914
16	786	758	771	888	788	838	982	910	939	926	888	909
17	787	759	775	926	812	870	968	912	936	934	896	916
18	796	756	778	923	859	892	978	906	936	928	904	913
19	800	772	788	921	835	873	958	914	932	934	910	919
20	805	773	790	926	832	883	962	924	944	947	907	926
21	813	765	797	905	817	862	957	921	939	949	913	928
22	825	781	804	955	837	899	955	915	934	937	917	924
23	825	781	808	920	818	870	953	907	925	938	922	929
24	830	798	817	859	813	840	945	899	919	942	926	933
25	838	776	806	897	817	837	942	896	916	946	926	935
26	833	765	801	938	892	911	938	894	916	953	933	940
27	838	783	813	959	909	927	945	895	919	965	935	948
28	839	788	808	967	925	944	943	895	918	973	937	953
29	837	773	804	980	910	946	980	894	914	974	942	955
30	838	743	804	997	915	955	935	895	912	970	942	954
31	---	---	---	1000	915	955	938	898	915	---	---	---
MONTH	839	723	777	1000	731	858	1020	894	940	974	888	926

TEMPERATURE (DEG. C) OF WATER, WATER YEAR OCTOBER 1974 TO SEPTEMBER 1975
ONCE-DAILY

DAY	OCT	NOV	DEC	JAN	FEB	MAR	APR	MAY	JUN	JUL	AUG	SEP
1	---	---	---	---	9.0	---	---	---	---	---	---	---
2	---	---	---	---	---	---	---	19.5	---	---	24.0	22.0
3	---	---	13.0	---	8.0	---	---	---	---	---	---	---
4	---	---	12.0	---	9.0	---	---	---	22.5	---	---	---
5	24.0	18.0	12.0	---	11.0	11.5	---	---	---	23.5	23.5	23.0
6	---	---	12.0	11.5	---	10.0	---	18.5	---	---	---	---
7	18.0	---	11.0	---	---	10.0	11.0	---	---	---	---	---
8	18.5	---	11.5	---	---	11.0	9.5	---	---	25.0	---	24.0
9	22.0	18.0	---	---	11.0	11.0	---	---	---	---	24.0	---
10	---	---	---	---	11.0	11.0	---	20.5	24.0	---	---	---
11	---	---	---	11.0	12.0	10.5	---	---	---	---	---	---
12	---	---	---	---	12.0	11.5	---	---	---	24.5	24.5	---
13	---	---	---	---	---	11.0	---	22.0	24.5	---	---	---
14	---	19.0	---	---	---	11.5	---	---	---	---	---	---
15	---	---	---	12.0	---	---	13.0	---	---	---	---	---
16	21.0	---	---	---	---	---	---	---	---	24.5	---	23.0
17	---	---	12.0	---	---	---	---	---	19.0	---	---	---
18	20.0	---	---	13.0	11.0	---	15.5	---	---	---	23.0	---
19	21.0	17.0	---	---	---	---	---	---	---	24.0	---	---
20	---	---	---	---	---	---	---	---	---	---	---	23.0
21	---	---	12.0	14.5	---	---	---	19.0	---	---	23.0	---
22	22.0	---	---	---	12.0	---	---	---	---	---	---	---
23	---	16.5	---	---	---	---	17.0	---	24.0	25.0	---	---
24	---	---	9.0	---	---	---	---	---	---	---	---	22.0
25	20.0	---	---	14.0	14.5	---	---	---	---	---	23.0	---
26	---	---	---	---	---	13.0	---	---	---	25.0	---	---
27	---	13.5	---	---	16.0	---	---	---	23.0	---	---	21.5
28	19.0	---	7.0	---	16.0	---	---	---	---	---	22.0	---
29	17.0	---	8.0	9.5	---	---	19.0	---	---	23.0	---	---
30	---	14.5	7.0	---	---	---	---	---	24.5	---	---	23.0
31	---	---	---	9.5	---	11.0	---	24.0	---	---	---	---
MONTH	---	---	---	---	---	---	---	---	---	---	---	---

11113000 SESPE CREEK NEAR FILLMORE, CALIF.--Continued

SUSPENDED-SEDIMENT DISCHARGE (TONS/DAY), WATER YEAR OCTOBER 1974 TO SEPTEMBER 1975

	OCTOBER			NOVEMBER			DECEMBER		
DAY	MEAN DISCHARGE (CFS)	MEAN CONCEN-TRATION (MG/L)	SEDIMENT DISCHARGE (TONS/DAY)	MEAN DISCHARGE (CFS)	MEAN CONCEN-TRATION (MG/L)	SEDIMENT DISCHARGE (TONS/DAY)	MEAN DISCHARGE (CFS)	MEAN CONCEN-TRATION (MG/L)	SEDIMENT DISCHARGE (TONS/DAY)
1	.58	4	.01	5.8	3	.05	1.4	3	.01
2	.52	3	0	4.9	3	.04	1.3	3	.01
3	.64	3	.01	4.2	3	.03	12	53	12
4	.78	3	.01	3.6	3	.03	2530	7720	75500
5	.71	3	.01	3.1	3	.03	208	1030	695
6	.71	3	.01	2.6	3	.02	77	390	81
7	4.3	55	.56	2.2	3	.02	40	260	28
8	8.7	7	.16	1.9	3	.02	35	220	21
9	6.6	5	.09	1.6	3	.01	33	150	13
10	1.7	4	.02	1.4	3	.01	29	90	7.0
11	1.6	4	.02	1.2	3	.01	27	53	3.9
12	1.3	4	.01	1.1	2	.01	27	33	2.4
13	1.3	3	.01	1.1	2	.01	27	20	1.5
14	1.1	3	.01	1.1	2	.01	25	12	.81
15	1.0	3	.01	1.3	2	.01	24	8	.52
16	.92	10	.02	1.3	4	.01	23	6	.37
17	.78	9	.02	1.6	6	.03	23	5	.31
18	.65	8	.01	1.9	6	.03	22	4	.24
19	.76	7	.01	1.3	6	.02	22	3	.18
20	1.0	6	.02	1.3	6	.02	22	2	.12
21	1.1	6	.02	1.3	5	.02	21	2	.11
22	.92	5	.01	1.3	5	.02	21	2	.11
23	.86	4	.01	1.5	10	.04	21	2	.11
24	.91	3	.01	1.6	11	.05	20	3	.16
25	.99	2	.01	1.2	10	.03	20	3	.16
26	1.0	2	.01	1.2	9	.03	20	3	.16
27	1.1	2	.01	1.6	9	.04	20	3	.16
28	5.6	8	.13	1.6	9	.04	83	1630	467
29	7.6	3	.06	2.3	11	.07	52	400	56
30	7.1	3	.06	1.8	16	.08	35	210	20
31	6.6	3	.05	---	---	---	31	70	5.9
TOTAL	69.43	---	1.40	59.9	---	.84	3552.7	---	76917.24

	JANUARY			FEBRUARY			MARCH		
DAY	MEAN DISCHARGE (CFS)	MEAN CONCEN-TRATION (MG/L)	SEDIMENT DISCHARGE (TONS/DAY)	MEAN DISCHARGE (CFS)	MEAN CONCEN-TRATION (MG/L)	SEDIMENT DISCHARGE (TONS/DAY)	MEAN DISCHARGE (CFS)	MEAN CONCEN-TRATION (MG/L)	SEDIMENT DISCHARGE (TONS/DAY)
1	27	34	2.5	15	6	.24	30	6	.49
2	24	22	1.4	110	828	1060	30	5	.41
3	23	12	.75	373	578	754	28	4	.30
4	22	7	.42	188	145	74	27	4	.29
5	22	5	.30	114	50	15	150	1030	1810
6	22	4	.24	84	26	5.9	2920	6210	54000
7	21	4	.23	65	14	2.5	3320	3180	29700
8	22	5	.30	56	8	1.2	5110	5430	87000
9	21	7	.40	399	1210	1880	1330	522	2190
10	21	8	.45	459	374	496	697	145	273
11	21	10	.57	264	105	75	487	90	118
12	20	9	.49	178	37	18	353	74	71
13	20	8	.43	139	23	8.6	299	64	52
14	19	7	.36	113	18	5.5	305	44	36
15	19	6	.31	99	12	3.2	250	30	20
16	19	7	.36	88	10	2.4	230	22	14
17	18	9	.44	75	8	1.6	210	17	9.6
18	18	12	.58	65	7	1.2	195	12	6.3
19	18	9	.44	60	6	.97	191	10	5.2
20	18	6	.29	56	6	.91	186	8	4.0
21	18	4	.19	51	5	.69	170	8	3.7
22	17	4	.18	46	5	.62	178	7	3.4
23	16	4	.17	43	5	.58	160	7	3.0
24	17	3	.14	41	5	.55	155	6	2.5
25	17	3	.14	39	4	.42	145	6	2.3
26	17	3	.14	38	4	.41	135	6	2.2
27	16	3	.13	34	4	.37	125	5	1.7
28	14	2	.08	32	10	.86	117	5	1.6
29	13	2	.07	---	---	---	112	5	1.5
30	14	2	.08	---	---	---	106	4	1.1
31	13	4	.14	---	---	---	103	4	1.1
TOTAL	587	---	12.72	3324	---	4410.72	17854	---	175334.7

11113000 SESPE CREEK NEAR FILLMORE, CALIF.--Continued

SUSPENDED-SEDIMENT DISCHARGE (TONS/DAY), WATER YEAR OCTOBER 1974 TO SEPTEMBER 1975

	APRIL			MAY			JUNE		
DAY	MEAN DISCHARGE (CFS)	MEAN CONCEN-TRATION (MG/L)	SEDIMENT DISCHARGE (TONS/DAY)	MEAN DISCHARGE (CFS)	MEAN CONCEN-TRATION (MG/L)	SEDIMENT DISCHARGE (TONS/DAY)	MEAN DISCHARGE (CFS)	MEAN CONCEN-TRATION (MG/L)	SEDIMENT DISCHARGE (TONS/DAY)
1	103	4	1.1	81	4	.87	24	3	.19
2	96	4	1.0	79	4	.85	22	3	.18
3	92	4	.99	77	4	.83	20	3	.16
4	89	4	.96	76	5	1.0	21	3	.17
5	287	594	648	72	5	.97	20	2	.11
6	273	214	169	71	6	1.2	19	2	.10
7	206	66	37	69	6	1.1	18	2	.10
8	177	54	26	63	6	1.0	17	2	.09
9	172	36	17	59	6	.96	17	2	.09
10	163	29	13	56	7	1.1	16	2	.09
11	152	23	9.4	56	8	1.2	15	2	.08
12	144	18	7.0	53	9	1.3	19	2	.10
13	145	12	4.7	52	9	1.3	22	2	.12
14	148	10	4.0	49	8	1.1	14	2	.08
15	155	18	7.5	47	8	1.0	13	2	.07
16	140	12	4.5	46	6	.75	14	2	.08
17	130	8	2.8	45	5	.61	13	2	.07
18	120	7	2.3	43	4	.46	13	2	.07
19	114	7	2.2	43	3	.35	14	2	.08
20	111	7	2.1	41	3	.33	15	2	.08
21	110	7	2.1	39	2	.21	15	2	.08
22	109	7	2.1	39	2	.21	15	3	.12
23	109	8	2.4	36	2	.19	14	3	.11
24	105	8	2.3	34	2	.18	13	4	.14
25	102	8	2.2	34	2	.18	12	4	.13
26	97	7	1.8	31	2	.17	9.9	4	.11
27	92	6	1.5	29	2	.16	8.6	5	.12
28	87	6	1.4	27	2	.15	8.0	5	.11
29	83	5	1.1	24	2	.13	7.9	4	.09
30	82	5	1.1	22	3	.18	7.7	2	.04
31	---	---	---	26	4	.28	---	---	---
TOTAL	3993	---	978.55	1519	---	20.32	457.1	---	3.16

	JULY			AUGUST			SEPTEMBER		
DAY	MEAN DISCHARGE (CFS)	MEAN CONCEN-TRATION (MG/L)	SEDIMENT DISCHARGE (TONS/DAY)	MEAN DISCHARGE (CFS)	MEAN CONCEN-TRATION (MG/L)	SEDIMENT DISCHARGE (TONS/DAY)	MEAN DISCHARGE (CFS)	MEAN CONCEN-TRATION (MG/L)	SEDIMENT DISCHARGE (TONS/DAY)
1	7.1	3	.06	.90	5	.01	.49	2	0
2	6.8	3	.06	1.0	6	.02	.48	2	0
3	6.5	4	.07	1.2	6	.02	.49	2	0
4	6.7	4	.07	1.5	7	.03	.48	3	0
5	6.5	5	.09	1.5	7	.03	.49	3	0
6	6.4	5	.09	1.7	7	.03	.49	3	0
7	6.4	5	.09	1.7	7	.03	.48	3	0
8	6.0	5	.08	1.7	7	.03	.49	3	0
9	5.4	5	.07	1.6	6	.03	.49	3	0
10	4.9	4	.05	1.5	6	.02	.49	2	0
11	3.9	4	.04	1.4	6	.02	.49	2	0
12	2.6	3	.02	1.3	6	.02	.49	2	0
13	2.2	3	.02	1.3	6	.02	.49	2	0
14	2.6	3	.02	1.3	5	.02	.50	2	0
15	2.5	3	.02	1.2	5	.02	.55	2	0
16	2.3	4	.02	1.1	4	.01	.56	2	0
17	2.1	4	.02	1.1	3	.01	.55	2	0
18	2.0	4	.02	1.0	3	.01	.53	3	0
19	1.8	4	.02	.90	3	.01	.53	3	0
20	2.3	4	.02	.60	5	.01	.48	4	.01
21	1.8	4	.02	.58	8	.01	.50	4	.01
22	1.4	5	.02	.57	7	.01	.55	5	.01
23	2.4	6	.04	.55	5	.01	.52	5	.01
24	4.1	12	.13	.54	4	.01	.47	6	.01
25	2.1	10	.06	.55	4	.01	.46	6	.01
26	1.2	8	.03	.55	4	.01	.49	5	.01
27	1.3	7	.02	.54	4	.01	.49	5	.01
28	1.2	5	.02	.55	4	.01	.63	5	.01
29	.90	4	.01	.55	3	0	.56	5	.01
30	.80	4	.01	.54	3	0	.56	5	.01
31	.90	4	.01	.49	3	0	---	---	---
TOTAL	105.10	---	1.32	31.51	---	.48	15.27	---	.11
YEAR	31568.01		257681.6						

11113000 SESPE CREEK NEAR FILLMORE, CALIF.--Continued

PARTICLE-SIZE DISTRIBUTION OF SUSPENDED SEDIMENT, WATER YEAR OCTOBER 1974 TO SEPTEMBER 1975

DATE	TIME	TEMPERATURE (DEG C)	INSTANTANEOUS DISCHARGE (CFS)	SUSPENDED SEDIMENT (MG/L)	SUSPENDED SEDIMENT DISCHARGE (T/DAY)	SUS. SED. FALL DIAM. % FINER THAN .002 MM	SUS. SED. FALL DIAM. % FINER THAN .004 MM	SUS. SED. FALL DIAM. % FINER THAN .008 MM	SUS. SED. FALL DIAM. % FINER THAN .016 MM	SUS. SED. FALL DIAM. % FINER THAN .031 MM	SUS. SED. FALL DIAM. % FINER THAN .062 MM
OCT.											
07...	0932	17.0	1.9	163	.	--	--	--	--	--	--
07...	1648	18.0	7.8	44	.	--	--	--	--	--	--
DEC.											
04...	0935	12.5	2380	5200	33400	18	25	35	47	59	71
04...	1600	12.0	1720	4890	22700	34	46	64	79	88	93
05...	0940	10.0	160	1020	441	56	74	87	95	97	--
28...	0910	7.0	58	588	92	36	49	63	78	88	--
FEB.											
03...	1645	8.0	330	337	300	22	30	39	46	51	--
04...	1500	9.0	172	99	46	--	--	--	--	--	--
09...	1715	11.0	554	882	1320	21	29	37	48	57	--
MAR.											
05...	1535	11.5	53	633	91	--	--	--	--	--	--
06...	1355	10.0	2850	3120	24000	23	32	46	59	70	78
06...	1745	10.5	2530	2570	17600	19	28	38	48	57	--
08...	1100	11.0	6180	7030	117000	22	29	40	54	71	84
08...	1700	11.5	3750	2820	28600	19	27	38	51	65	78
09...	1020	10.0	1340	461	1670	27	38	53	66	76	--

DATE	SUS. SED. SIEVE DIAM. % FINER THAN .062 MM	SUS. SED. FALL DIAM. % FINER THAN .125 MM	SUS. SED. SIEVE DIAM. % FINER THAN .125 MM	SUS. SED. FALL DIAM. % FINER THAN .250 MM	SUS. SED. SIEVE DIAM. % FINER THAN .250 MM	SUS. SED. FALL DIAM. % FINER THAN .500 MM	SUS. SED. SIEVE DIAM. % FINER THAN .500 MM	SUS. SED. FALL DIAM. % FINER THAN 1.00 MM	SUS. SED. SIEVE DIAM. % FINER THAN 1.00 MM	SUS. SED. SIEVE DIAM. % FINER THAN 2.00 MM
OCT.										
07...	100	--	--	--	--	--	--	--	--	--
07...	94	--	99	--	100	--	--	--	--	--
DEC.										
04...	--	86	--	96	--	99	--	100	--	--
04...	--	96	--	99	--	100	--	--	--	--
05...	97	--	99	--	100	--	--	--	--	--
28...	92	--	97	--	99	--	100	--	--	--
FEB.										
03...	56	--	63	--	71	--	79	--	87	100
04...	79	--	85	--	90	--	95	--	99	100
09...	64	--	77	--	87	--	94	--	99	100
MAR.										
05...	99	--	100	--	--	--	--	--	--	--
06...	--	85	--	90	--	97	--	100	--	--
06...	64	--	72	--	79	--	88	--	94	100
08...	--	94	--	99	--	100	--	--	--	--
08...	--	87	--	94	--	100	--	--	--	--
09...	86	--	91	--	95	--	98	--	100	--

11113500 SANTA PAULA CREEK NEAR SANTA PAULA, CALIF.

LOCATION.--Lat 34°23'44", long 119°04'32", in NW¼SW¼SW¼ sec.27, T.4 N., R.21 W., Ventura County, on right bank 15 ft (5 m) upstream from Santa Paula Water Works diversion dam, 200 ft (61 m) upstream from Mud Creek, and 3 mi (5 km) north of Santa Paula.

DRAINAGE AREA.--40.0 mi^2 (103.6 km^2).

PERIOD OF RECORD.--October 1927 to current year. March 1912 to September 1913, at site 2.5 mi (4.0 km) upstream; records not equivalent.

GAGE.--Water-stage recorder and concrete diversion dam control. Datum of gage is 638.59 ft (194.642 m) above mean sea level (Corps of Engineers bench mark). Oct. 1, 1927, to Feb. 19, 1931, at site 500 ft (152 m) downstream at different datum. Feb. 20, 1931, to Dec. 5, 1963, and July 30, 1965, to May 5, 1969, at datum 3.00 ft (0.914 m) higher. Dec. 6, 1963, to July 29, 1965, at site 50 ft (15 m) upstream at datum 3.00 ft (0.914 m) higher.

AVERAGE DISCHARGE.--48 years, 21.6 ft^3/s (0.612 m^3/s), 15,650 acre-ft/yr (19.3 hm^3/yr).

EXTREMES.--Current year: Maximum discharge, 1,440 ft^3/s (40.8 m^3/s) Dec. 4 (gage height, 7.88 ft or 2.402 m); minimum daily, 1.7 ft^3/s (0.048 m^3/s) Sept. 19.
Period of record: Maximum discharge, 21,000 ft^3/s (595 m^3/s) Feb. 25, 1969 (gage height, 18.18 ft or 5.541 m, from floodmark, present datum), from rating curve extended above 2,300 ft^3/s (65.1 m^3/s) on basis of critical-depth measurement at gage height 15.2 ft (4.633 m); no flow at times in 1949, 1951-52, 1965.

REMARKS.--Records good below 270 ft^3/s (7.65 m^3/s) and fair above. No regulation above station. Diversion above station for irrigation of 60 acres (243,000 m^2) by Santa Paula Water Works began prior to October 1927; 340 acre-ft (419,000 m^3) was diverted during current year.

COOPERATION.--Records of diversion furnished by Santa Paula Water Works.

DISCHARGE, IN CUBIC FEET PER SECOND, WATER YEAR OCTOBER 1974 TO SEPTEMBER 1975
MEAN VALUES

DAY	OCT	NOV	DEC	JAN	FEB	MAR	APR	MAY	JUN	JUL	AUG	SEP
1	2.3	3.0	2.8	6.7	5.6	8.3	24	25	13	6.6	4.5	2.8
2	2.4	3.0	2.7	6.4	23	7.8	22	23	14	6.4	4.5	2.8
3	2.5	3.3	14	6.1	38	8.0	21	22	20	6.2	4.5	2.7
4	2.5	3.5	332	5.6	20	7.4	20	21	17	5.8	4.0	2.7
5	2.7	3.3	24	5.5	16	21	66	19	15	6.3	3.8	2.7
6	2.6	3.1	15	5.1	14	268	63	18	17	5.8	3.4	2.6
7	4.6	3.0	11	5.9	14	259	50	17	15	6.3	2.8	2.4
8	4.7	3.1	9.3	5.2	12	416	41	16	15	4.8	2.3	3.5
9	4.0	3.1	8.7	5.0	62	214	39	16	12	5.1	2.3	3.6
10	3.6	2.9	8.1	5.0	63	156	36	15	11	5.7	2.2	3.6
11	3.2	2.8	7.6	5.0	42	87	34	14	12	5.7	2.2	3.3
12	3.1	2.1	7.1	5.0	30	64	33	14	11	5.4	2.2	3.1
13	2.9	1.8	6.6	6.1	23	58	33	13	9.5	5.8	2.3	3.2
14	2.8	1.9	6.4	5.3	19	54	33	13	8.7	5.7	2.8	3.7
15	2.7	2.0	6.3	5.2	16	48	36	13	10	5.4	3.4	3.1
16	2.6	2.6	6.1	4.5	15	42	35	13	12	5.4	3.4	2.8
17	2.6	3.2	6.6	4.5	14	40	35	13	11	5.4	3.2	2.5
18	2.5	3.0	6.7	4.5	12	38	34	13	9.0	5.4	3.2	2.3
19	2.6	2.7	5.8	4.5	11	36	32	13	10	5.4	3.4	1.7
20	2.7	2.2	5.8	4.7	11	35	30	13	8.6	4.6	3.6	1.8
21	2.8	2.3	5.5	4.6	11	34	30	13	8.9	5.3	3.6	2.0
22	3.0	2.6	5.5	4.7	10	41	31	13	9.5	4.8	3.6	1.8
23	2.8	3.1	5.5	4.5	9.7	35	31	13	6.6	4.7	3.5	1.8
24	2.5	3.5	5.5	4.7	9.6	32	32	13	5.9	4.8	3.2	2.0
25	2.2	3.5	5.5	4.7	9.1	31	32	13	5.4	4.8	3.0	2.1
26	2.3	2.7	5.5	5.0	8.9	31	30	13	5.0	4.6	3.0	1.9
27	2.4	2.7	5.5	5.0	8.7	29	30	13	5.7	4.6	3.0	1.8
28	3.5	3.5	22	5.3	8.4	27	30	13	6.7	3.8	3.0	2.0
29	3.2	3.3	10	5.3	---	26	28	14	8.2	3.3	3.2	2.1
30	3.0	3.2	7.9	5.3	---	24	26	20	6.4	3.4	3.0	2.2
31	2.9	---	6.9	5.3	---	24	---	15	---	4.5	2.8	---
TOTAL	90.2	86.0	577.9	160.2	536.0	2201.5	1017	477	319.3	161.8	98.9	76.6
MEAN	2.91	2.87	18.6	5.17	19.1	71.0	33.9	15.4	10.6	5.22	3.19	2.55
MAX	4.7	3.5	332	6.7	63	416	66	25	20	6.6	4.5	3.7
MIN	2.2	1.8	2.7	4.5	5.6	7.4	20	13	5.0	3.3	2.2	1.7
AC-FT	179	171	1150	318	1060	4370	2020	946	633	321	196	152

CAL YR 1974 TOTAL 5895.1 MEAN 16.2 MAX 332 MIN 1.7 AC-FT 11690
WTR YR 1975 TOTAL 5802.4 MEAN 15.9 MAX 416 MIN 1.7 AC-FT 11510

Peak discharge (base, 200 ft^3/s).--Dec. 4 (0445) 1,440 ft^3/s (7.88 ft); Mar. 8 (0115) 855 ft^3/s (7.73 ft).

11113500 SANTA PAULA CREEK NEAR SANTA PAULA, CALIF.--Continued

PERIOD OF RECORD.--Chemical analyses: October 1966 to current year.
Specific conductance: April 1969 to current year.
Water temperatures: April 1969 to September 1970.

EXTREMES.--Current year:
Specific conductance: Maximum recorded, 1,320 micromhos Dec. 29; minimum recorded, 179 micromhos Mar. 8.
Period of record:
Specific conductance: Maximum recorded, 1,370 micromhos Oct. 14, 1972; minimum recorded, 325 micromhos Dec. 1, 1973.

REMARKS.--The letter "A" following a date indicates chemical-quality data furnished by California Department of Water Resources. Missing specific conductance data due to equipment malfunction or probe out of water.

WATER QUALITY DATA, WATER YEAR OCTOBER 1974 TO SEPTEMBER 1975

DATE	TIME	INSTANTANEOUS DISCHARGE (CFS)	DISSOLVED IRON (FE) (UG/L)	DISSOLVED SULFATE (SO4) (MG/L)	DISSOLVED CHLORIDE (CL) (MG/L)	DISSOLVED SOLIDS (RESIDUE AT 180 C) (MG/L)	DISSOLVED SOLIDS (TONS PER AC-FT)	HARDNESS (CA,MG) (MG/L)	SPECIFIC CONDUCTANCE (MICROMHOS)	PH (UNITS)
NOV.										
19...A	0945	3.0	--	216	39	635	.86	342	840	8.2
JAN.										
21...A	1000	4.6	--	225	37	660	.90	348	830	8.2
MAR.										
08...	1215	855	--	--	--	197	.27	--	291	--
APR.										
22...A	0830	31	--	146	9.0	361	.49	248	550	8.4
MAY										
21...A	0800	13	20	--	--	--	--	--	--	--
JULY										
22...A	0830	4.8	--	186	23	530	.72	310	750	8.3

DATE	TEMPERATURE (DEG C)	TURBIDITY (JTU)	DISSOLVED OXYGEN (MG/L)	DISSOLVED ARSENIC (AS) (UG/L)	DISSOLVED CADMIUM (CD) (UG/L)	DISSOLVED COPPER (CU) (UG/L)	DISSOLVED LEAD (PB) (UG/L)	TOTAL MERCURY (HG) (UG/L)	DISSOLVED ZINC (ZN) (UG/L)
NOV.									
19...	13.0	4	11.4	--	--	--	--	--	--
JAN.									
21...	10.5	2	11.8	--	--	--	--	--	--
MAR.									
08...	8.8	--	--	--	--	--	--	--	--
APR.									
22...	13.0	2	10.8	--	--	--	--	--	--
MAY									
21...	--	--	--	0	0	0	0	.1	0
JULY									
22...	18.5	0	9.5	--	--	--	--	--	--

11113500 SANTA PAULA CREEK NEAR SANTA PAULA, CALIF.--Continued

SPECIFIC CONDUCTANCE (MICROMHOS/CM AT 25 DEG. C), WATER YEAR OCTOBER 1974 TO SEPTEMBER 1975

	OCTOBER			NOVEMBER			DECEMBER			JANUARY		
DAY	MAX	MIN	MEAN	MAX	MIN	MEAN	MAX	MIN	MEAN	MAX	MIN	MEAN
1	972	847	918	984	874	936	1020	891	955	989	961	970
2	992	839	928	966	846	920	992	886	943	971	958	965
3	985	850	923	958	834	914	1090	783	950	968	954	961
4	976	911	946	978	830	912	755	327	529	965	927	957
5	953	820	907	956	821	909	929	769	860	995	940	958
6	961	819	910	952	832	912	967	932	951	1020	927	966
7	1070	876	978	961	837	914	970	953	959	1010	944	983
8	1060	953	1020	960	837	911	984	956	967	1010	968	991
9	1100	896	1010	949	831	909	1020	949	986	1010	899	967
10	1080	887	1010	944	822	905	1040	997	1000	1000	930	954
11	1110	891	1010	967	836	913	1000	993	997	---	---	---
12	1080	875	983	1000	836	929	1000	990	995	---	---	---
13	1090	856	974	955	855	920	1010	986	994	---	---	---
14	1060	854	959	964	846	921	989	979	985	---	---	---
15	1050	844	953	959	839	911	1010	975	983	---	---	---
16	1040	779	916	951	865	922	1010	975	984	---	---	---
17	942	788	888	966	854	924	999	927	968	922	834	941
18	964	800	891	962	862	926	999	930	970	922	834	892
19	933	793	886	967	881	934	995	982	988	922	854	899
20	965	814	896	965	876	930	992	979	984	922	838	896
21	939	856	904	964	916	944	1000	965	981	918	814	881
22	953	796	886	990	904	958	983	969	975	922	826	891
23	951	878	911	1000	923	973	983	959	966	910	878	903
24	945	803	888	1010	925	979	980	949	960	---	---	---
25	973	822	915	1020	924	979	970	946	959	---	---	---
26	981	871	936	1020	905	970	957	950	954	---	---	---
27	985	847	930	1010	931	980	954	902	947	---	---	---
28	998	866	935	1020	943	990	995	575	793	---	---	---
29	1010	890	939	1030	942	996	1320	989	1050	930	862	912
30	1000	850	943	1010	902	959	989	948	981	926	874	910
31	985	913	957	---	---	---	978	971	973	922	866	905
MONTH	1110	779	937	1030	821	937	1320	327	951	---	---	---

	FEBRUARY			MARCH			APRIL			MAY		
DAY	MAX	MIN	MEAN	MAX	MIN	MEAN	MAX	MIN	MEAN	MAX	MIN	MEAN
1	914	870	901	851	703	799	688	624	667	641	549	609
2	914	406	798	853	705	801	700	628	673	661	517	606
3	802	574	672	854	686	792	709	629	678	664	524	610
4	930	702	770	856	732	818	705	665	689	660	544	618
5	---	---	---	886	514	819	853	413	580	683	555	633
6	---	---	---	612	228	311	622	450	583	687	547	633
7	---	---	---	369	229	267	666	618	651	682	538	629
8	---	---	---	347	179	257	651	639	643	682	530	627
9	---	---	---	---	---	---	667	587	622	685	517	621
10	---	---	---	---	---	---	607	555	585	689	517	623
11	586	506	539	---	---	---	596	564	585	684	508	616
12	646	586	607	---	---	---	600	524	569	680	500	610
13	678	642	657	---	---	---	581	537	562	675	511	615
14	726	650	690	---	---	---	553	541	547	675	519	622
15	746	690	725	---	---	---	546	518	533	698	630	671
16	---	---	---	---	---	---	570	514	543	694	626	668
17	---	---	---	---	---	---	577	513	556	707	535	643
18	---	---	---	634	610	624	585	509	556	708	548	644
19	---	---	---	624	596	614	588	508	556	713	681	697
20	---	---	---	627	603	617	592	500	554	722	598	678
21	---	---	---	609	601	603	591	523	566	731	583	677
22	---	---	---	683	607	647	594	578	587	732	576	672
23	---	---	---	621	597	612	602	538	576	730	562	667
24	---	---	---	615	587	602	613	581	599	735	559	666
25	---	---	---	613	585	599	617	525	584	728	572	670
26	834	710	792	632	612	623	632	536	597	729	577	674
27	835	707	788	630	610	622	631	527	593	726	698	716
28	841	693	787	670	622	642	635	515	588	735	563	673
29	---	---	---	682	618	659	638	506	587	739	591	686
30	---	---	---	687	603	655	638	510	590	760	584	694
31	---	---	---	683	663	675	---	---	---	761	597	703
MONTH	---	---	---	---	---	---	853	413	593	761	500	651

11113500 SANTA PAULA CREEK NEAR SANTA PAULA, CALIF.--Continued

SPECIFIC CONDUCTANCE (MICROMHOS/CM AT 25 DEG. C), WATER YEAR OCTOBER 1974 TO SEPTEMBER 1975

	JUNE			JULY			AUGUST			SEPTEMBER		
DAY	MAX	MIN	MEAN	MAX	MIN	MEAN	MAX	MIN	MEAN	MAX	MIN	MEAN
1	771	615	721	819	635	749	913	673	824	861	745	821
2	772	612	723	825	633	753	923	679	829	852	740	813
3	785	721	763	832	636	756	920	672	825	849	729	807
4	798	630	740	831	627	752	914	682	822	842	718	798
5	787	599	718	829	621	746	915	679	820	841	717	795
6	777	593	713	824	616	741	916	680	820	838	720	793
7	774	590	707	818	598	735	906	670	813	835	717	790
8	771	619	720	817	601	738	907	667	812	860	740	819
9	776	584	707	803	583	722	900	668	810	837	803	824
10	765	573	693	814	610	742	886	662	803	830	788	813
11	758	562	687	840	604	751	899	675	816	829	731	792
12	760	568	686	843	615	759	905	681	823	828	726	793
13	749	561	678	841	673	775	912	718	845	825	725	796
14	746	570	685	836	624	763	920	692	836	826	708	785
15	735	587	686	850	634	767	900	684	822	835	727	801
16	736	652	707	840	640	769	884	664	803	844	726	802
17	738	698	722	835	635	765	868	664	799	855	719	805
18	743	643	708	829	641	764	855	639	774	870	724	814
19	744	712	733	831	635	763	827	599	744	877	747	818
20	771	595	703	838	630	764	823	599	739	896	756	845
21	765	585	694	844	636	764	856	750	796	883	755	840
22	760	588	692	851	623	763	863	763	824	882	752	838
23	750	602	699	833	625	756	874	774	838	889	749	841
24	757	709	734	835	619	751	881	775	843	892	744	844
25	779	603	709	842	618	752	883	777	845	898	740	844
26	774	602	707	840	620	759	882	776	844	884	730	831
27	781	613	713	866	638	776	881	771	843	888	736	833
28	803	639	738	861	649	781	882	768	842	868	730	822
29	814	642	749	871	655	793	897	761	844	864	726	820
30	816	632	749	866	650	785	882	750	833	866	724	818
31	---	---	---	880	684	805	863	745	822	---	---	---
MONTH	816	561	713	880	583	760	923	599	818	898	708	815

11113900 SATICOY DIVERSION NEAR SATICOY, CALIF.

LOCATION.--Lat 34°17'06", long 119°07'14", in Santa Paula Y Saticoy Grant, Ventura County, on diversion ditch 0.7 mi (1.1 km) downstream from Santa Clara River, and 1.5 mi (2.4 km) east of Saticoy.

PERIOD OF RECORD.--April 1969 to current year. October 1928 to April 1969 in files of United Water Conservation District.

GAGE.--Water-stage recorder. Altitude of gage is 160 ft (49 m), from topographic map.

EXTREMES.--Period of record: Maximum daily discharge, 411 ft^3/s (11.6 m^3/s) Mar. 15, 1975; no flow at times in most years.

REMARKS. -Water is diverted from left bank of Santa Clara River to percolation basin near Los Angeles Avenue (State Highway 118) and for irrigation in Pleasant Valley. See sta 11110000, Piru Creek near Piru, for report of controlled releases from Lake Piru. Imported water from the California Water Project released to the basin at Castaic Dam and Pyramid Dam since 1972.

COOPERATION. -Records furnished by United Water Conservation District.

DISCHARGE, IN CUBIC FEET PER SECOND, WATER YEAR OCTOBER 1974 TO SEPTEMBER 1975
MEAN VALUES

DAY	OCT	NOV	DEC	JAN	FEB	MAR	APR	MAY	JUN	JUL	AUG	SEP
1	17	24	19	84	56	96	176	167	66	35	49	20
2	17	22	20	81	51	93	174	165	68	26	49	20
3	16	22	22	73	74	93	169	161	67	26	54	20
4	18	23	0	75	122	91	165	158	65	26	55	20
5	19	22	0	73	194	177	130	154	63	27	44	20
6	20	22	104	72	154	0	238	150	59	27	33	20
7	27	22	155	71	133	0	326	147	58	27	30	20
8	34	20	142	70	125	0	322	142	60	25	28	18
9	27	20	117	70	70	0	303	138	59	28	27	18
10	25	20	97	70	124	0	292	132	56	29	27	18
11	24	20	82	70	333	0	277	129	55	31	28	18
12	24	18	75	70	270	0	268	129	53	30	26	18
13	24	16	72	70	218	182	257	124	51	33	26	18
14	24	16	64	70	193	374	264	114	54	35	25	20
15	22	17	62	70	177	411	268	94	54	36	26	21
16	19	16	57	70	161	390	252	91	53	36	26	21
17	18	18	54	67	149	346	244	92	50	34	26	20
18	18	19	40	63	139	307	228	90	51	33	26	19
19	18	20	44	62	134	294	221	92	50	36	25	19
20	20	20	48	61	124	287	216	90	47	38	24	18
21	23	19	49	59	116	274	210	86	47	41	22	19
22	22	20	50	58	115	326	211	85	48	37	23	20
23	21	20	51	59	114	281	210	84	49	35	21	19
24	20	20	51	60	106	253	204	82	45	35	23	17
25	20	20	52	59	93	242	196	80	41	37	23	17
26	20	20	53	59	96	237	193	80	35	41	23	17
27	22	19	53	59	97	225	185	80	28	45	23	16
28	25	19	88	59	95	220	181	74	32	52	24	16
29	25	20	129	58	---	204	177	68	36	42	24	18
30	24	19	172	59	---	198	171	65	38	39	22	18
31	24	---	106	59	---	189	---	63	---	39	22	---
TOTAL	677	593	2128	2060	3833	5790	6728	3406	1538	1061	904	563
MEAN	21.8	19.8	68.6	66.5	137	187	224	110	51.3	34.2	29.2	18.8
MAX	34	24	172	84	333	411	326	167	68	52	55	21
MIN	16	16	0	58	51	0	130	63	28	25	21	16
AC-FT	1340	1180	4220	4090	7600	11480	13340	6760	3050	2100	1790	1120

CAL YR 1974 TOTAL 26337.00 MEAN 72.2 MAX 339 MIN 0 AC-FT 52240
WTR YR 1975 TOTAL 29281.00 MEAN 80.2 MAX 411 MIN 0 AC-FT 58080

11113900 SATICOY DIVERSION NEAR SATICOY, CALIF.--Continued

PERIOD OF RECORD.--Specific conductance: April 1969 to current year.
Water temperatures: April 1969 to September 1970.

EXTREMES.--Current year:
Specific conductance: Maximum, 2,230 micromhos Oct. 8; minimum, 755 micromhos Apr. 5.
Period of record:
Specific conductance: Maximum, 2,320 micromhos Oct. 21, 1972; minimum, 755 micromhos Apr. 5, 1975.

REMARKS.--Dike washed out Dec. 4-6, Feb. 2, 3, 9-11, Mar. 6-13; equipment malfunction Mar. 16, 17, July 27 to Aug. 4, Aug. 12-14, 18, 19, Sept. 12-20.

SPECIFIC CONDUCTANCE (MICROMHOS/CM AT 25 DEG. C), WATER YEAR OCTOBER 1974 TO SEPTEMBER 1975

	OCTOBER			NOVEMBER			DECEMBER			JANUARY		
DAY	MAX	MIN	MEAN	MAX	MIN	MEAN	MAX	MIN	MEAN	MAX	MIN	MEAN
1	1850	1820	1840	1880	1790	1840	1840	1760	1810	1690	1510	1600
2	1850	1830	1840	1930	1810	1860	1880	1760	1810	1680	1520	1610
3	1840	1810	1820	1900	1770	1850	1900	1640	1810	1710	1530	1620
4	1860	1820	1840	1880	1800	1850	---	---	---	1690	1550	1620
5	1880	1840	1850	1900	1810	1860	---	---	---	1730	1510	1630
6	1860	1810	1830	1890	1800	1850	---	---	---	1690	1420	1640
7	1830	1400	1750	1890	1810	1840	1570	1490	1530	1660	1600	1630
8	2230	1430	1880	1900	1780	1840	1590	1530	1560	1690	1560	1610
9	1850	1780	1820	1940	1780	1840	1700	1560	1610	1650	1550	1590
10	1840	1780	1810	1880	1770	1840	1760	1570	1680	1670	1540	1600
11	1870	1620	1790	1870	1780	1830	1780	1660	1720	1700	1500	1610
12	1850	1800	1830	1920	1780	1860	1800	1660	1730	1700	1530	1600
13	1840	1790	1820	1950	1790	1870	1810	1660	1750	1700	1470	1590
14	1840	1770	1810	1890	1830	1860	1810	1680	1760	1700	1550	1630
15	1890	1820	1850	1950	1790	1870	1830	1710	1770	1740	1570	1650
16	1900	1850	1880	1940	1800	1870	1830	1720	1780	1720	1530	1650
17	1890	1840	1870	1920	1690	1860	1840	1720	1780	1740	1520	1650
18	1890	1840	1870	1880	1740	1820	1810	1720	1770	1730	1570	1660
19	1960	1860	1890	1900	1760	1820	1800	1720	1770	1760	1520	1670
20	1910	1840	1870	1890	1740	1820	1840	1720	1770	1750	1590	1680
21	1860	1830	1840	1890	1800	1840	1870	1720	1780	1750	1450	1650
22	1910	1850	1880	1900	1810	1860	1810	1720	1760	1730	1590	1650
23	1880	1860	1870	1880	1780	1830	1780	1670	1730	1810	1530	1660
24	1910	1870	1890	1900	1770	1830	1760	1640	1720	1830	1550	1700
25	1890	1820	1880	1890	1750	1800	1770	1620	1710	1820	1530	1720
26	1950	1870	1890	1880	1760	1810	1770	1650	1730	1810	1430	1660
27	1900	1840	1870	1890	1760	1820	1770	1660	1740	1740	1530	1670
28	1870	1710	1820	1890	1760	1810	1720	961	1280	1730	1590	1630
29	1860	1800	1830	1860	1750	1790	1530	1220	1380	1710	1550	1620
30	1880	1800	1840	1880	1750	1800	1620	1510	1540	1700	1480	1620
31	1860	1790	1840	---	---	---	1580	1520	1550	1720	1470	1610
MONTH	2230	1400	1850	1950	1690	1840	1900	961	1690	1830	1420	1640

11113900 SATICOY DIVERSION NEAR SATICOY, CALIF.--Continued

SPECIFIC CONDUCTANCE (MICROMHOS/CM AT 25 DEG. C), WATER YEAR OCTOBER 1974 TO SEPTEMBER 1975

	FEBRUARY			MARCH			APRIL			MAY		
DAY	MAX	MIN	MEAN	MAX	MIN	MEAN	MAX	MIN	MEAN	MAX	MIN	MEAN
1	1700	1520	1600	1610	1480	1530	1310	1170	1250	1250	1150	1200
2	---	---	---	1660	1500	1560	1320	1170	1240	1270	1180	1210
3	---	---	---	1700	1440	1550	1350	1210	1270	1320	1110	1230
4	1210	981	1090	1690	1450	1570	1340	1190	1270	1290	1160	1210
5	1340	1180	1250	1610	901	1440	1550	755	1100	1290	1180	1230
6	1430	1270	1350	---	---	---	1040	757	880	1360	1180	1250
7	1460	1370	1400	---	---	---	1080	947	1010	1460	1190	1270
8	1510	1390	1440	---	---	---	1100	1020	1050	1380	1200	1270
9	---	---	---	---	---	---	1170	1050	1100	1370	1150	1290
10	---	---	---	---	---	---	1140	1020	1080	1390	1200	1310
11	---	---	---	---	---	---	1140	1030	1080	1410	1220	1310
12	1180	1020	1090	---	---	---	1200	1050	1110	1370	1240	1330
13	1270	1150	1200	---	---	---	1230	1040	1120	1420	1320	1360
14	1330	1220	1280	1060	991	1030	1150	1040	1080	1400	1330	1370
15	1360	1240	1300	1130	1020	1060	1090	1000	1040	1390	1330	1350
16	1380	1240	1310	---	---	---	1140	976	1040	1430	1340	1370
17	1410	1280	1340	---	---	---	1130	1010	1060	1430	1340	1390
18	1440	1270	1370	1190	1060	1110	1190	1020	1080	1470	1370	1410
19	1470	1350	1400	1190	1090	1130	1180	1020	1100	1410	1350	1380
20	1490	1380	1430	1200	1100	1130	1220	1080	1140	1460	1360	1400
21	1500	1380	1440	1190	1110	1130	1220	1060	1140	1480	1340	1410
22	1530	1360	1440	1250	1020	1140	1200	1080	1140	1480	1360	1400
23	1580	1410	1470	1230	1080	1140	1200	1040	1150	1440	1360	1400
24	1590	1440	1510	1250	1130	1190	1200	1080	1130	1410	1360	1390
25	1570	1470	1520	1270	1100	1210	1240	1080	1160	1440	1360	1400
26	1680	1450	1530	1270	1130	1190	1260	1090	1150	1480	1340	1420
27	1640	1410	1510	1270	1140	1210	1230	1100	1160	1480	1420	1450
28	1590	1470	1510	1290	1140	1190	1230	1110	1170	1460	1380	1430
29	---	---	---	1280	1070	1200	1240	1140	1180	1520	1350	1440
30	---	---	---	1300	1160	1230	1360	1120	1210	1580	1300	1430
31	---	---	---	1290	1200	1240	---	---	---	1570	1300	1450
MONTH	1700	981	1380	---	---	---	1550	755	1120	1580	1110	1350

	JUNE			JULY			AUGUST			SEPTEMBER		
DAY	MAX	MIN	MEAN	MAX	MIN	MEAN	MAX	MIN	MEAN	MAX	MIN	MEAN
1	1460	1230	1390	1680	1370	1570	---	---	---	1730	1700	1720
2	1570	1300	1440	1680	1440	1600	---	---	---	1730	1710	1720
3	1540	1300	1410	1670	1420	1560	---	---	---	1750	1710	1730
4	1540	1340	1430	1650	1460	1580	---	---	---	1770	1710	1730
5	1470	1340	1410	1700	1390	1570	1650	1460	1540	1770	1680	1740
6	1540	1370	1450	1650	1350	1560	1640	1540	1600	1760	1720	1740
7	1600	1340	1500	1720	1460	1610	1700	1580	1630	1740	1680	1720
8	1630	1360	1500	1720	1370	1610	1710	1440	1610	1720	1690	1710
9	1570	1340	1440	1660	1420	1550	1710	1590	1630	1730	1710	1720
10	1620	1370	1480	1690	1460	1600	1690	1550	1600	1760	1720	1730
11	1630	1360	1490	1630	1410	1570	1700	1620	1660	---	---	---
12	1500	1370	1450	1630	1450	1560	---	---	---	---	---	---
13	1520	1370	1460	1640	1340	1560	---	---	---	---	---	---
14	1650	1430	1530	1660	1370	1540	---	---	---	---	---	---
15	1680	1390	1500	1640	1430	1560	1700	1640	1690	---	---	---
16	1600	1330	1470	1670	1470	1560	1700	1580	1660	---	---	---
17	1570	1360	1500	1630	1430	1550	1690	1660	1680	---	---	---
18	1650	1360	1520	1630	1370	1540	---	---	---	---	---	---
19	1700	1450	1580	1620	1330	1510	---	---	---	---	---	---
20	1720	1390	1590	1610	1450	1540	1700	1660	1680	---	---	---
21	1710	1460	1580	1580	1460	1520	1690	1640	1670	1780	1590	1720
22	1680	1360	1580	1660	1510	1580	1690	1650	1670	1700	1590	1630
23	1710	1480	1600	1610	1540	1570	1710	1370	1630	1750	1230	1650
24	1690	1370	1600	1660	1530	1600	1710	1660	1670	1770	1730	1750
25	1720	1500	1620	1570	1450	1520	1680	1660	1670	1760	1720	1750
26	1740	1470	1630	1640	1420	1510	1700	1680	1690	1740	1690	1720
27	1710	1470	1610	---	---	---	1710	1690	1700	1750	1730	1740
28	1700	1470	1600	---	---	---	1770	1710	1740	1760	1730	1750
29	1700	1470	1590	---	---	---	1750	1730	1740	1750	1700	1720
30	1700	1410	1570	---	---	---	1750	1720	1740	1770	1720	1740
31	---	---	---	---	---	---	1740	1700	1720	---	---	---
MONTH	1740	1230	1520	1720	1330	1560	---	---	---	---	---	---

11114000 SANTA CLARA RIVER AT MONTALVO, CALIF.

LOCATION.--Lat 34°14'31", long 119°11'21", in San Miguel Grant, Ventura County, on downstream end of center pier southbound bridge on U.S. Highway 101, 0.9 mi (1.4 km) southeast of Montalvo.

DRAINAGE AREA.--1,612 mi^2 (4,175 km^2).

PERIOD OF RECORD.--October 1927 to September 1932, October 1949 to current year. Monthly discharge only for 1950-67, published in WRD 1968 report. October 1949 to September 1969, published as "at Saticoy."

GAGE.--Water-stage recorder. Datum of gage is 51.88 ft (15.813 m) above mean sea level (levels by Ventura County Flood Control District). Oct. 1, 1927, to Sept. 30, 1932, and Oct. 1, 1949, to Sept. 30, 1967, at same site at different datums. Oct. 1, 1967, to Feb. 2, 1970, at site 3.9 mi (6.3 km) upstream at different datum.

AVERAGE DISCHARGE.--31 years, 115 ft^3/s (3.257 m^3/s), 83,320 acre-ft/yr (103 hm^3/yr).

EXTREMES.--Current year: Maximum discharge, 10,800 ft^3/s (306 m^3/s) Mar. 8 (gage height, 5.83 ft or 1.777 m); no flow many days.
Period of record: Maximum discharge, 165,000 ft^3/s (4,670 m^3/s) Jan. 25, 1969 (gage height, 17.41 ft or 5.307 m, present datum); no flow for long periods in most years.
Flood of Mar. 2, 1938, 120,000 ft^3/s (3,400 m^3/s), estimated by Ventura County Flood Control District.

REMARKS.--Records poor. Flow partly regulated since May 1955 by Lake Piru (see sta 11109700), since December 1971 by Pyramid Dam, capacity, 173,500 acre-ft (214 hm^3), and since January 1972 by Castaic Reservoir, capacity, 324,000 acre-ft (399 hm^3). Natural flow affected by ground-water withdrawals, diversions, municipal use, and ground-water replenishment. Imported water from the California Water Project released to the basin at Castaic Dam and Pyramid Dam. Diversion to spreading grounds and for irrigation in Pleasant Valley, at site 6.0 mi (9.7 km) upstream (see sta 11113900). AVERAGE DISCHARGE represents flow to the ocean regardless of upstream development.

COOPERATION.--Fifteen discharge measurements furnished by Ventura County Flood Control District.

DISCHARGE, IN CUBIC FEET PER SECOND, WATER YEAR OCTOBER 1974 TO SEPTEMBER 1975
MEAN VALUES

DAY	OCT	NOV	DEC	JAN	FEB	MAR	APR	MAY	JUN	JUL	AUG	SEP
1			0	.50	0	0	.03	.04				
2			0	.40	0	0	.02	.04				
3			.30	.30	860	0	.01	.04				
4			3900	.20	290	0	.01	.04				
5			500	.10	20	0	390	.04				
6			3.0	.10	0	2610	230	.04				
7			.30	.05	0	3360	110	.04				
8			.20	.02	0	7110	1.5	.04				
9			.20	0	820	2160	1.1	.04				
10			.10	0	950	1240	.23	.04				
11			.05	0	80	830	.23	.04				
12			.02	0	5.0	438	.18	.04				
13			.01	0	3.0	49	.14	.04				
14			0	0	1.0	83	.14	.03				
15			0	0	.50	41	.07	.03				
16			0	0	.20	3.0	.07	.03				
17			0	0	.11	2.0	.05	.03				
18			0	0	.11	1.0	.06	.02				
19			0	0	.11	.50	.06	.02				
20			0	0	.11	.50	.06	.02				
21			0	0	.11	.50	.06	.02				
22			0	0	.10	1.0	.05	.02				
23			0	0	.10	.50	.05	.01				
24			0	0	.10	.50	.05	.01				
25			0	0	.10	.50	.05	.01				
26			0	0	.05	.20	.04	.01				
27			0	0	.02	.06	.04	.01				
28			110	0	0	.06	.04	.01				
29			150	0	---	.05	.04	.01				
30			1.7	0	---	.05	.04	0				
31		---	1.0	0	---	.04	---	0	---			---
TOTAL	0	0	4666.88	1.67	3030.72	17931.46	734.42	.81	0	0	0	0
MEAN	0	0	151	.054	108	578	24.5	.026	0	0	0	0
MAX	0	0	3900	.50	950	7110	390	.04	0	0	0	0
MIN	0	0	0	0	0	0	.01	0	0	0	0	0
AC-FT	0	0	9260	3.3	6010	35570	1460	1.6	0	0	0	0

CAL YR 1974 TOTAL 35944.08 MEAN 98.5 MAX 8700 MIN 0 AC-FT 71300
WTR YR 1975 TOTAL 26365.96 MEAN 72.2 MAX 7110 MIN 0 AC-FT 52300

11114000 SANTA CLARA RIVER AT MONTALVO, CALIF.--Continued

PERIOD OF RECORD.--Water temperatures: October 1967 to September 1969, October 1970 to current year.
Sediment records: October 1967 to current year.
Prior to October 1969, published as "at Saticoy" (sta 11113920).

EXTREMES.--Current year:
Sediment concentrations: Maximum daily, 12,000 mg/l Mar. 8; minimum daily, no flow for many days.
Sediment discharge: Maximum daily, 259,000 tons (235,000 tonnes) Mar. 8; minimum daily, 0 tons (0 tonnes) on many days.
Period of record:
Sediment concentrations: Maximum daily, 69,200 mg/l Feb. 25, 1969; minimum daily, no flow for many days each year.
Sediment discharge: Maximum daily, 20,400,000 tons (18,500,000 tonnes) Feb. 25, 1969; minimum daily, 0 tons (0 tonnes) on many days each year.

REMARKS.--Miscellaneous analyses of chemical data published for water year 1969. Sediment table omitted for period of no flow during July to September.

TEMPERATURE (DEG. C) OF WATER, WATER YEAR OCTOBER 1974 TO SEPTEMBER 1975
ONCE-DAILY

DAY	OCT	NOV	DEC	JAN	FEB	MAR	APR	MAY	JUN	JUL	AUG	SEP
1			---		---	---	---					
2			---		---	---	---					
3			---		---	---	---					
4			13.0		11.5	---	---					
5			12.5		---	---	13.5					
6			14.5		---	12.0	13.0					
7			14.0		---	12.0	15.0					
8			---		---	11.5	12.0					
9			14.0		12.0	13.0	15.5					
10			---		11.0	11.0	20.0					
11			---		17.0	11.0	21.0					
12			14.0		16.5	12.0	---					
13			---		11.0	17.0	---					
14			---		18.0	12.0	---					
15			---		---	16.0	---					
16			---		15.0	12.0	16.0					
17			---		---	13.0	---					
18			---		---	---	---					
19			---		---	---	---					
20			---		---	19.0	---					
21			---		---	---	---					
22			---		---	16.0	---					
23			---		---	---	---					
24			---		---	---	---					
25			---		---	---	---					
26			---		---	---	---					
27			---		---	---	---					
28			9.5		---	---	---					
29			10.0		---	---	---					
30			11.0		---	---	---					
31			12.0		---	---	---					
MONTH			---		---	---	---					

11114000 SANTA CLARA RIVER AT MONTALVO, CALIF.--Continued

SUSPENDED-SEDIMENT DISCHARGE (TONS/DAY), WATER YEAR OCTOBER 1974 TO SEPTEMBER 1975

	OCTOBER			NOVEMBER			DECEMBER		
DAY	MEAN DISCHARGE (CFS)	MEAN CONCEN-TRATION (MG/L)	SEDIMENT DISCHARGE (TONS/DAY)	MEAN DISCHARGE (CFS)	MEAN CONCEN-TRATION (MG/L)	SEDIMENT DISCHARGE (TONS/DAY)	MEAN DISCHARGE (CFS)	MEAN CONCEN-TRATION (MG/L)	SEDIMENT DISCHARGE (TONS/DAY)
1							0	0	0
2							0	0	0
3							.30	300	.24
4							3900	10400	125000.0
5							500	4600	6210
6							3.0	540	4.4
7							.30	20	.02
8							.20	30	.02
9							.20	45	.02
10							.10	40	.01
11							.05	35	0
12							.02	30	0
13							.01	25	0
14							0	0	0
15							0	0	0
16							0	0	0
17							0	0	0
18							0	0	0
19							0	0	0
20							0	0	0
21							0	0	0
22							0	0	0
23							0	0	0
24							0	0	0
25							0	0	0
26							0	0	0
27							0	0	0
28							110	740	395
29							150	470	347
30							1.7	25	.11
31							1.0	30	.08
TOTAL	0	0	0	0	0	0	4666.88	---	131956.9

	JANUARY			FEBRUARY			MARCH		
DAY	MEAN DISCHARGE (CFS)	MEAN CONCEN-TRATION (MG/L)	SEDIMENT DISCHARGE (TONS/DAY)	MEAN DISCHARGE (CFS)	MEAN CONCEN-TRATION (MG/L)	SEDIMENT DISCHARGE (TONS/DAY)	MEAN DISCHARGE (CFS)	MEAN CONCEN-TRATION (MG/L)	SEDIMENT DISCHARGE (TONS/DAY)
1	.50	25	.03	0	0	0	0	0	0
2	.40	25	.03	0	0	0	0	0	0
3	.30	20	.02	860	220	511	0	0	0
4	.20	20	.01	290	225	176	0	0	0
5	.10	15	0	20	55	3.0	0	0	0
6	.10	15	0	0	0	0	2610	7040	65300
7	.05	15	0	0	0	0	3360	4800	43500
8	.02	10	0	0	0	0	7110	12000	259000.0
9	0	0	0	820	440	974	2160	2650	19000
10	0	0	0	950	235	603	1240	2700	9040
11	0	0	0	80	30	6.5	830	550	1230
12	0	0	0	5.0	15	.20	438	385	455
13	0	0	0	3.0	10	.08	49	235	31
14	0	0	0	1.0	10	.03	83	420	99
15	0	0	0	.50	10	.01	41	110	12
16	0	0	0	.20	5	0	3.0	15	.12
17	0	0	0	.11	5	0	2.0	15	.08
18	0	0	0	.11	5	0	1.0	20	.05
19	0	0	0	.11	5	0	.50	30	.04
20	0	0	0	.11	5	0	.50	50	.07
21	0	0	0	.11	5	0	.50	30	.04
22	0	0	0	.10	5	0	1.0	20	.05
23	0	0	0	.10	5	0	.50	20	.03
24	0	0	0	.10	5	0	.50	15	.02
25	0	0	0	.10	5	0	.50	15	.02
26	0	0	0	.05	5	0	.20	15	.01
27	0	0	0	.02	5	0	.06	10	0
28	0	0	0	0	0	0	.06	10	0
29	0	0	0	---	---	---	.05	10	0
30	0	0	0	---	---	---	.05	10	0
31	0	0	0	---	---	---	.04	5	0
TOTAL	1.67	---	.09	3030.72	---	2273.82	17931.46	---	397667.5

11114000 SANTA CLARA RIVER AT MONTALVO, CALIF.--Continued

SUSPENDED-SEDIMENT DISCHARGE (TONS/DAY), WATER YEAR OCTOBER 1974 TO SEPTEMBER 1975

	APRIL			MAY			JUNE		
DAY	MEAN DISCHARGE (CFS)	MEAN CONCEN-TRATION (MG/L)	SEDIMENT DISCHARGE (TONS/DAY)	MEAN DISCHARGE (CFS)	MEAN CONCEN-TRATION (MG/L)	SEDIMENT DISCHARGE (TONS/DAY)	MEAN DISCHARGE (CFS)	MEAN CONCEN-TRATION (MG/L)	SEDIMENT DISCHARGE (TONS/DAY)
1	.03	5	0	.04	10				
2	.02	5	0	.04	10				
3	.01	5	0	.04	10				
4	.01	5	0	.04	10				
5	390	1430	3860	.04	10				
6	230	350	217	.04	5				
7	110	270	105	.04	5				
8	1.5	30	.12	.04	5				
9	1.1	25	.07	.04	5				
10	.23	30	.02	.04	5				
11	.23	25	.02	.04	5				
12	.18	25	.01	.04	5				
13	.14	30	.01	.04	5				
14	.14	35	.01	.03	5				
15	.07	35	.01	.03	5				
16	.07	30	.01	.03	5				
17	.05	30	0	.03	5				
18	.06	25	0	.02	5				
19	.06	25	0	.02	5				
20	.06	20	0	.02	5				
21	.06	20	0	.02	5				
22	.05	20	0	.02	5				
23	.05	15	0	.01	5				
24	.05	15	0	.01	5				
25	.05	15	0	.01	5				
26	.04	15	0	.01	5				
27	.04	15	0	.01	5				
28	.04	10	0	.01	5				
29	.04	10	0	.01	5				
30	.04	10	0	0	0				
31	---	---	---	0	0				
TOTAL	734.42	---	4182.28	.81	---	0	0	0	0
YEAR	26365		536080						

SUMMARY OF WATER AND SEDIMENT DISCHARGE, WATER YEAR OCTOBER 1974 TO SEPTEMBER 1975

MONTH	WATER DISCHARGE CFS-DAYS	SUSPENDED SEDIMENT DISCHARGE TONS	BEDLOAD DISCHARGE TONS	TOTAL SEDIMENT DISCHARGE TONS
OCTOBER 1974	0.0	0.0	0	0
NOVEMBER ...	0.0	0.0	0	0
DECEMBER ...	4666.88	131956.90	21100	153000
JANUARY 1975	1.67	0.09	0	0
FEBRUARY ...	3030.72	2273.82	13700	15900
MARCH	17931.46	397667.53	84200	482000
APRIL	734.42	4182.28	2150	6330
MAY	0.81	0.0	0	0
JUNE	0.0	0.0	0	0
JULY	0.0	0.0	0	0
AUGUST	0.0	0.0	0	0
SEPTEMBER ..	0.0	0.0	0	0
TOTAL	26365.96	536080.62	121150	657230

11114000 SANTA CLARA RIVER AT MONTALVO, CALIF.--Continued

PARTICLE-SIZE DISTRIBUTION OF SUSPENDED SEDIMENT, WATER YEAR OCTOBER 1974 TO SEPTEMBER 1975

DATE	TIME	TEMPER-ATURE (DEG C)	INSTAN-TANEOUS DIS-CHARGE (CFS)	SUS-PENDED SEDI-MENT (MG/L)	SUS-PENDED SEDI-MENT DIS-CHARGE (T/DAY)	SUS. SED. FALL DIAM. % FINER THAN .002 MM	SUS. SED. FALL DIAM. % FINER THAN .004 MM	SUS. SED. FALL DIAM. % FINER THAN .008 MM	SUS. SED. FALL DIAM. % FINER THAN .016 MM	SUS. SED. FALL DIAM. % FINER THAN .031 MM
DEC.										
04...	0930	13.5	6500	14400	253000	45	55	73	88	96
06...	1145	15.0	3.0	323	2.6	41	58	62	74	85
28...	1030	9.0	150	1140	462	72	87	97	97	99
28...	1530	10.0	200	1240	670	70	84	90	93	96
FEB.										
04...	0900	10.0	400	253	273	50	68	79	89	94
09...	1030	12.0	1000	566	1530	67	84	92	98	98
MAR.										
06...	0900	11.5	3790	16400	168000	24	25	38	51	66
07...	0845	12.0	3420	6770	62500	18	22	28	37	47
08...	1315	12.0	10500	18100	513000	19	25	32	45	59
APR.										
05...	1730	14.0	1150	15400	47800	37	49	71	90	97

DATE	SUS. SED. FALL DIAM. % FINER THAN .062 MM	SUS. SED. SIEVE DIAM. % FINER THAN .062 MM	SUS. SED. FALL DIAM. % FINER THAN .125 MM	SUS. SED. SIEVE DIAM. % FINER THAN .125 MM	SUS. SED. FALL DIAM. % FINER THAN .250 MM	SUS. SED. SIEVE DIAM. % FINER THAN .250 MM	SUS. SED. FALL DIAM. % FINER THAN .500 MM	SUS. SED. SIEVE DIAM. % FINER THAN .500 MM	SUS. SED. FALL DIAM. % FINER THAN 1.00 MM	SUS. SED. SIEVE DIAM. % FINER THAN 1.00 MM
DEC.										
04...	100	--	--	--	--	--	--	--	--	--
06...	--	91	--	95	--	96	--	98	--	100
28...	--	100	--	--	--	--	--	--	--	--
28...	96	--	96	--	99	--	100	--	--	--
FEB.										
04...	--	95	--	97	--	98	--	100	--	--
09...	--	99	--	99	--	100	--	--	--	--
MAR.										
06...	79	--	86	--	92	--	100	--	--	--
07...	56	--	63	--	78	--	97	--	100	--
08...	72	--	82	--	92	--	99	--	100	--
APR.										
05...	--	100	--	--	--	--	--	--	--	--

PARTICLE-SIZE DISTRIBUTION OF SURFACE BED MATERIAL, WATER YEAR OCTOBER 1974 TO SEPTEMBER 1975

DATE	TIME	TEMPER-ATURE (DEG C)	NUMBER OF SAM-PLING POINTS	DIS-CHARGE (CFS)	INSTAN-TANEOUS DIS-CHARGE (CFS)	BED MAT. SIEVE DIAM. % FINER THAN .062 MM	BED MAT. SIEVE DIAM. % FINER THAN .125 MM	BED MAT. SIEVE DIAM. % FINER THAN .250 MM
MAR.								
18...	1250	--	3	1.0	--	--	--	2
APR.								
30...	1330	24.0	3	--	.04	--	1	3
SEP.								
30...	1345	--	9	--	.00	1	4	12

DATE	BED MAT. SIEVE DIAM. % FINER THAN .500 MM	BED MAT. SIEVE DIAM. % FINER THAN 1.00 MM	BED MAT. SIEVE DIAM. % FINER THAN 2.00 MM	BED MAT. SIEVE DIAM. % FINER THAN 4.00 MM	BED MAT. SIEVE DIAM. % FINER THAN 8.00 MM	BED MAT. SIEVE DIAM. % FINER THAN 16.0 MM	BED MAT. SIEVE DIAM. % FINER THAN 32.0 MM	BED MAT. SIEVE DIAM. % FINER THAN 64.0 MM
MAR.								
18...	23	60	77	87	95	100	--	--
APR.								
30...	20	57	74	85	93	98	100	--
SEP.								
30...	43	67	77	84	90	94	97	100

11115000 MATILIJA RESERVOIR AT MATILIJA HOT SPRINGS, CALIF.

LOCATION.--Lat 34°29'08", long 119°18'25", in NE¼NW¼SE¼ sec.29, T.5 N., R.23 W., Ventura County, on left end of dam 0.2 mi (0.3 km) east of Matilija Hot Springs, and 1.8 mi (2.9 km) southwest of Wheeler Springs.

DRAINAGE AREA.--54.4 mi^2 (140.9 km^2).

PERIOD OF RECORD.--March 1948 to September 1965, October 1970 to current year. Prior to October 1953, published as "at Matilija."

GAGE.--Water-stage recorder. Datum of gage is at mean sea level (Ventura County Department of Public Works bench mark). Prior to Nov. 12, 1970, at site near right end of dam at same datum.

EXTREMES.--Current year: Maximum contents, 2,607 acre-ft (3.21 hm^3) Mar. 8 (elevation, 1,096.82 ft or 334.311 m); minimum, 529 acre-ft (652,000 m^3) Nov. 7 (elevation, 1,059.88 ft or 323.051 m).

Period of record: Maximum contents, 7,399 acre-ft (9.12 hm^3) Apr. 3, 1958 (elevation, 1,128.10 ft or 343.845 m); minimum, 5.90 acre-ft (7,270 m^3) Oct. 31, 1970 (elevation, 1,038.31 ft or 316.477 m).

Maximum contents from September 1965 to September 1970, 3,128 acre-ft (3.86 hm^3) Jan. 25, 1969 (elevation, 1,103.6 ft or 336.377 m).

REMARKS.--Reservoir is formed by concrete-arch dam. Dam was completed in 1948. Storage began Mar. 14, 1948. Capacity table is dated October 1970 (furnished by Ventura County Flood Control District). Lowest sluice gate silted, elevation, 1,000 ft (304.8 m). Usable capacity, 2,380 acre-ft (2.93 hm^3) between elevations 1,045 ft (318.5 m), lowest usable outlet and 1,095 ft (333.8 m), crest of spillway. Dead storage below lowest usable outlet, 93 acre-ft (115,000 m^3). Capacity below spillway, 2,473 acre-ft (3.05 hm^3). Water is released from reservoir to natural stream for recharge of ground-water basin in Ventura River Valley and at times releases up to 500 ft^3/s (14.2 m^3/s), diverted since May 1959 at Robles diversion dam to Lake Casitas on Coyote Creek.

MONTHEND ELEVATION AND CONTENTS, WATER YEAR OCTOBER 1974 TO SEPTEMBER 1975

Date	Elevation (feet)a	Contents (acre-feet)	Change in contents (acre-feet)
Sept. 30	1,071.58	1,023	--
Oct. 31	1,071.30	1,010	-13
Nov. 30	1,061.10	573	-437
Dec. 31	1,066.08	770	+197
CAL YR 1974	--	--	+60
Jan. 31	1,067.89	850	+80
Feb. 28	1,075.10	1,204	+354
Mar. 31	1,075.90	1,248	+44
Apr. 30	1,078.30	1,380	+132
May 31	1,074.95	1,196	-184
June 30	1,073.63	1,128	-68
July 31	1,073.25	1,108	-20
Aug. 31	1,073.20	1,105	-3
Sept. 30	1,073.19	1,104	-1
WTR YR 1975	--	--	+81

a Elevation at 2400.

11115500 MATILIJA CREEK AT MATILIJA HOT SPRINGS, CALIF.

LOCATION.--Lat 34°28'58", long 119°18'03", in SW¼NW¼SW¼ sec.28, T.5 N., R.23 W., Ventura County, on right bank 0.2 mi (0.3 km) east of Matilija Hot Springs, 0.2 mi (0.3 km) upstream from North Fork, and 0.4 mi (0.6 km) downstream from Matilija Dam.

DRAINAGE AREA.--54.6 mi^2 (141.4 km^2).

PERIOD OF RECORD.--October 1927 to current year. Combined monthly records for creek and diversion, May 1951 to September 1969. Prior to October 1953, published as "at Matilija."

GAGE.--Water-stage recorder. Concrete control since September 1969. Altitude of gage is 900 ft (274 m), from topographic map. Prior to Feb. 11, 1939, at site 0.6 mi (1.0 km) upstream at different datum.

EXTREMES.--Current year: Maximum discharge, 1,820 ft^3/s (51.5 m^3/s) Mar. 8 (gage height, 6.13 ft or 1.868 m); minimum daily, 1.7 ft^3/s (0.048 m^3/s) Oct. 1.
Period of record: Maximum discharge, 20,000 ft^3/s (566 m^3/s) Jan. 25, 1969 (gage height, 16.5 ft or 5.03 m), from rating curve extended above 4,200 ft^3/s (119 m^3/s) on basis of computation of maximum flow over dam; minimum daily, 0.10 ft^3/s (0.003 m^3/s) for several days in some years of regulated flow.

REMARKS. -Records good. Flow regulated by Matilija Reservoir March 1948 to March 1964, capacity, 7,020 acre-ft (8.66 hm^3) and partly regulated since March 1964, capacity, 2,470 acre-ft (3.05 hm^3). Water diverted at dam by Matilija conduit to Ventura River basin and Ojai Valley for irrigation from May 1951 to January 1969.

DISCHARGE, IN CUBIC FEET PER SECOND, WATER YEAR OCTOBER 1974 TO SEPTEMBER 1975

DAY	OCT	NOV	DEC	JAN	FEB	MAR	APR	MAY	JUN	JUL	AUG	SEP
1	1.7	3.0	3.0	8.8	9.5	11	8.5	183	14	9.7	4.1	3.6
2	1.9	3.0	3.0	8.8	10	11	8.8	106	14	7.4	4.1	3.5
3	1.9	3.0	3.8	8.8	9.8	11	8.8	8.5	13	7.4	4.1	3.3
4	2.1	2.9	260	8.7	9.9	11	8.8	8.5	13	7.4	4.1	2.8
5	1.9	2.9	263	8.5	10	11	9.5	8.7	13	7.4	3.7	2.7
6	1.9	135	31	8.8	10	206	9.4	8.8	13	7.4	3.0	2.7
7	2.0	90	5.7	8.8	10	324	131	8.8	13	7.4	3.2	2.7
8	2.0	2.5	5.6	8.9	10	1,110	208	8.8	13	7.4	3.4	2.8
9	2.0	2.5	5.7	9.2	93	438	163	8.8	12	6.9	3.6	2.8
10	2.5	2.5	5.7	9.3	244	499	61	8.8	12	6.7	3.8	2.8
11	2.5	2.5	5.7	9.3	160	491	60	8.7	10	6.4	3.8	2.8
12	2.5	2.3	5.7	9.3	89	304	58	22	12	6.0	3.8	2.8
13	2.4	2.5	7.4	9.3	9.3	129	57	19	12	5.7	3.8	2.8
14	2.4	2.5	8.8	9.3	9.3	122	29	18	13	5.7	3.8	2.8
15	2.4	2.5	8.8	9.3	9.3	122	8.5	18	13	5.7	3.8	2.8
16	2.4	2.5	8.8	9.3	9.7	108	8.8	18	13	5.7	3.8	2.7
17	2.4	2.5	8.8	9.3	9.7	76	8.8	18	13	5.7	3.8	2.9
18	2.2	2.5	8.8	9.3	10	76	8.8	19	13	5.7	3.8	2.9
19	2.2	2.5	8.8	9.3	10	75	8.8	21	13	5.7	3.8	2.9
20	2.2	2.5	8.8	9.3	10	73	8.8	20	13	5.4	3.8	2.9
21	2.2	2.7	8.8	9.3	10	73	8.9	20	13	5.7	3.8	2.9
22	2.3	2.7	8.8	9.3	10	73	9.3	20	12	5.4	3.8	2.8
23	2.3	2.5	8.8	9.3	10	73	9.3	19	12	5.4	3.7	2.8
24	2.7	2.5	8.8	9.3	11	137	9.3	18	12	5.4	3.7	2.8
25	3.0	2.5	8.8	9.3	11	115	9.3	18	12	5.4	3.6	2.8
26	3.0	2.5	8.8	9.3	11	7.9	9.3	18	12	5.1	3.4	2.8
27	3.0	2.5	8.9	9.3	11	7.9	9.3	16	12	4.9	3.3	2.9
28	3.1	2.5	9.0	9.3	11	7.7	9.3	14	12	4.9	3.2	2.9
29	3.0	2.7	9.2	9.3	------	7.7	9.4	14	12	4.5	3.0	2.9
30	3.0	3.0	8.0	9.3	------	7.8	120	14	12	4.2	3.1	2.9
31	3.0	------	8.9	9.3	------	8.3	------	14	------	4.1	3.5	------
TOTAL	73.9	298.2	765.1	283.9	827.5	4,726.3	1,076.7	725.4	376	187.8	113.2	86.5
MEAN	2.38	9.94	24.7	9.16	29.6	152	35.9	23.4	12.5	6.06	3.65	2.88
MAX	3.1	135	263	9.3	244	1,110	208	183	14	9.7	4.1	3.6
MIN	1.7	2.3	3.0	8.5	9.3	7.7	8.5	8.5	10	4.1	3.0	2.7
AC-FT	147	591	1,520	563	1,640	9,370	2,140	1,440	746	373	225	172

CAL YR 1974 TOTAL 7,398.1 MEAN 20.3 MAX 448 MIN 1.1 AC-FT 14,670
WTR YR 1975 TOTAL 9,540.5 MEAN 26.1 MAX 1,110 MIN 1.7 AC-FT 18,920

11115500 MATILIJA CREEK AT MATILIJA HOT SPRINGS, CALIF.--Continued

PERIOD OF RECORD.--Chemical analyses: Water years 1972 to current year (partial-record station).

REMARKS.--Chemical-quality records furnished by California Department of Water Resources.

WATER QUALITY DATA, WATER YEAR OCTOBER 1974 TO SEPTEMBER 1975

DATE	TIME	INSTANTANEOUS DISCHARGE (CFS)	DISSOLVED IRON (FE) (UG/L)	DISSOLVED CALCIUM (CA) (MG/L)	DISSOLVED MAGNESIUM (MG) (MG/L)	DISSOLVED SODIUM (NA) (MG/L)	DISSOLVED POTASSIUM (K) (MG/L)	BICARBONATE (HCO3) (MG/L)	CARBONATE (CO3) (MG/L)	ALKALINITY AS CACO3 (MG/L)	DISSOLVED SULFATE (SO4) (MG/L)
NOV.											
18...	0900	2.5	--	109	28	52	2.7	234	3	197	242
JAN.											
20...	0930	9.3	--	117	25	51	2.7	243	0	199	248
APR.											
21...	0815	9.3	--	101	27	33	2.0	207	0	170	245
MAY											
21...	0630	20	30	--	--	--	--	--	--	--	--
JULY											
21...	0820	5.7	--	85	28	43	1.6	157	0	129	256

DATE	DISSOLVED CHLORIDE (CL) (MG/L)	DISSOLVED FLUORIDE (F) (MG/L)	TOTAL NITRATE (N) (MG/L)	DISSOLVED SOLIDS (RESIDUE AT 180 C) (MG/L)	DISSOLVED SOLIDS (TONS PER AC-FT)	HARDNESS (CA,MG) (MG/L)	NONCARBONATE HARDNESS (MG/L)	PERCENT SODIUM	SODIUM ADSORPTION RATIO	SPECIFIC CONDUCTANCE (MICROMHOS)	PH (UNITS)
NOV.											
18...	44	.8	.00	593	.81	390	190	22	1.1	850	8.0
JAN.											
20...	39	.8	.00	667	.91	397	200	22	1.1	850	8.1
APR.											
21...	12	.7	.00	573	.78	365	200	16	.8	725	8.2
MAY											
21...	--	--	--	--	--	--	--	--	--	--	--
JULY											
21...	20	.8	.11	578	.79	330	200	22	1.0	800	8.1

DATE	TEMPERATURE (DEG C)	TURBIDITY (JTU)	DISSOLVED OXYGEN (MG/L)	TOTAL MERCURY (HG) (UG/L)	DISSOLVED ARSENIC (AS) (UG/L)	DISSOLVED BORON (B) (UG/L)	DISSOLVED CADMIUM (CD) (UG/L)	DISSOLVED COPPER (CU) (UG/L)	DISSOLVED LEAD (PB) (UG/L)	DISSOLVED ZINC (ZN) (UG/L)
NOV.										
18...	12.0	5	10.0	--	--	860	--	--	--	--
JAN.										
20...	10.5	3	11.1	--	--	1130	--	--	--	--
APR.										
21...	13.5	2	10.2	--	--	460	--	--	--	--
MAY										
21...	17.0	--	--	.1	0	--	0	0	0	0
JULY										
21...	22.0	0	7.9	--	--	610	--	--	--	--

11116000 NORTH FORK MATILIJA CREEK AT MATILIJA HOT SPRINGS, CALIF.

LOCATION.--Lat 34°29'33", long 119°18'20", in NE¼NW¼NE¼ sec.29, T.5 N., R.23 W., Ventura County, on right bank at bridge on U.S. Highway 399, 0.7 mi (1.1 km) north of Matilija Hot Springs, and 0.8 mi (1.3 km) upstream from mouth.

DRAINAGE AREA.--15.6 mi^2 (40.4 km^2).

PERIOD OF RECORD.--October 1928 to September 1932, October 1933 to current year. Prior to October 1953, published as "at Matilija."

GAGE.--Water-stage recorder. Concrete control since September 1966. Datum of gage is 1,141.62 ft (347.966 m), revised, above mean sea level (levels by Ventura County Flood Control District). Prior to Nov. 12, 1948, at site 0.3 mi (0.5 km) downstream at different datum.

AVERAGE DISCHARGE.--46 years, 10.2 ft^3/s (0.289 m^3/s), 7,390 acre-ft/yr (9.11 hm^3/yr).

EXTREMES. Current year: Maximum discharge, 745 ft^3/s (21.1 m^3/s) Dec. 4 (gage height, 3.75 ft or 1.143 m); minimum daily, 0.90 ft^3/s (0.026 m^3/s) Sept. 25-27.

Period of record: Maximum discharge, 9,440 ft^3/s (267 m^3/s) Feb. 24, 1969 (gage height, 11.0 ft or 3.35 m, from floodmark), from rating curve extended above 1,700 ft^3/s (48.1 m^3/s) on basis of slope-area measurement at gage height 10.0 ft (3.05 m); minimum daily, 0.10 ft^3/s (0.003 m^3/s) for several days in some years.

REMARKS.--Records good. No regulation or diversion above station.

COOPERATION.--Records furnished by Ventura County Flood Control District and reviewed by Geological Survey.

DISCHARGE, IN CUBIC FEET PER SECOND, WATER YEAR OCTOBER 1974 TO SEPTEMBER 1975
MEAN VALUES

DAY	OCT	NOV	DEC	JAN	FEB	MAR	APR	MAY	JUN	JUL	AUG	SEP
1	.98	1.3	1.3	3.2	3.2	3.8	8.6	6.4	4.1	2.7	1.4	1.3
2	.98	1.2	1.3	3.2	17	3.8	8.2	6.0	4.1	2.7	1.4	1.3
3	.98	1.2	3.7	3.0	23	3.8	7.7	6.0	4.1	2.5	1.4	1.2
4	.98	1.2	162	3.0	10	3.8	7.7	6.0	4.1	2.5	1.3	1.2
5	1.1	1.2	8.6	2.7	6.8	8.0	17	6.0	4.1	2.5	1.3	1.2
6	1.1	1.2	4.4	2.7	6.0	92	16	6.0	4.1	2.5	1.3	1.1
7	1.1	1.2	3.2	2.5	5.2	179	13	6.0	4.1	2.5	1.3	1.2
8	1.2	1.2	2.7	2.5	4.8	277	12	6.0	4.1	2.0	1.3	1.2
9	1.2	1.2	2.5	2.5	30	88	11	6.0	3.8	2.0	1.3	1.2
10	1.2	1.1	2.2	2.5	26	48	11	6.0	3.5	1.8	1.4	1.3
11	1.2	1.1	2.2	2.5	15	35	10	5.6	3.5	1.8	1.4	1.3
12	1.2	1.1	2.2	2.5	11	28	9.7	5.6	3.5	1.8	1.4	1.3
13	1.2	1.1	2.2	2.5	9.1	25	9.1	5.2	3.5	1.8	1.4	1.3
14	1.2	1.1	2.5	2.5	7.7	24	9.1	5.2	3.5	1.8	1.4	1.2
15	1.1	1.1	2.5	2.5	6.8	22	9.1	5.2	3.5	1.8	1.4	1.1
16	1.1	1.1	2.2	2.5	6.0	20	9.1	5.2	3.5	1.8	1.4	1.1
17	1.1	1.1	2.2	2.5	5.6	19	9.1	5.2	3.5	1.8	1.4	1.1
18	.98	1.1	2.2	2.5	5.2	18	8.6	5.2	3.5	1.8	1.4	1.1
19	1.1	1.1	2.2	2.5	4.8	16	8.6	5.6	3.5	1.8	1.4	1.1
20	1.1	1.1	2.2	2.5	4.8	15	8.2	5.6	3.5	1.8	1.4	1.1
21	1.2	1.2	2.2	2.5	4.8	14	7.7	5.6	3.5	1.8	1.4	.98
22	1.2	1.3	2.5	2.7	4.8	14	7.7	5.2	3.5	1.6	1.4	.98
23	1.2	1.3	2.7	2.7	4.4	13	7.7	4.8	3.5	1.6	1.4	.98
24	1.2	1.2	2.7	2.7	4.4	12	7.7	4.8	3.2	1.6	1.4	.98
25	1.2	1.2	2.7	2.7	4.4	12	7.7	4.4	3.0	1.6	1.4	.90
26	1.2	1.2	2.7	2.7	4.4	11	7.2	4.4	3.0	1.5	1.4	.90
27	1.2	1.2	3.6	2.7	4.4	10	7.2	4.4	2.7	1.5	1.4	.90
28	1.3	1.3	8.2	3.0	4.1	9.7	6.8	4.4	2.7	1.5	1.4	.98
29	1.4	1.4	5.2	3.0	---	9.1	6.4	4.1	2.7	1.5	1.3	1.1
30	1.3	1.4	3.8	3.0	---	8.6	6.4	4.1	2.7	1.5	1.3	1.1
31	1.3	---	3.5	3.2	---	8.6	---	4.1	---	1.5	1.3	---
TOTAL	35.80	35.7	254.3	83.7	243.7	1051.2	275.3	164.3	105.6	58.9	42.5	33.70
MEAN	1.15	1.19	8.20	2.70	8.70	33.9	9.18	5.30	3.52	1.90	1.37	1.12
MAX	1.4	1.4	162	3.2	30	277	17	6.4	4.1	2.7	1.4	1.3
MIN	.98	1.1	1.3	2.5	3.2	3.8	6.4	4.1	2.7	1.5	1.3	.90
AC-FT	71	71	504	166	483	2090	546	326	209	117	84	67

CAL YR 1974 TOTAL 1899.94 MEAN 5.21 MAX 281 MIN .98 AC-FT 3770
WTR YR 1975 TOTAL 2384.70 MEAN 6.53 MAX 277 MIN .90 AC-FT 4730

Peak discharge (base, 400 ft^3/s, revised).--Dec. 4 (0400) 745 ft^3/s (3.75 ft); Mar. 8 (0600) 354 ft^3/s (3.54 ft).

11116550 VENTURA RIVER NEAR MEINERS OAKS, CALIF.

LOCATION.--Lat 34°27'54", long 119°17'20", in SE¼SW¼SE¼ sec.33, T.5 N., R.23 W., Ventura County, on right bank 50 ft (15 m) downstream from Robles diversion dam, and 1.2 mi (1.9 km) northwest of Meiners Oaks.

DRAINAGE AREA.--76.4 mi^2 (197.9 km^2).

PERIOD OF RECORD.--May 1959 to current year.

GAGE.--Water-stage recorder. Datum of gage is 750.00 ft (228.600 m) above mean sea level (Bureau of Reclamation bench mark). Prior to Oct. 30, 1969, at site 500 ft (152 m) downstream at datum 5.40 ft (1.646 m) lower.

EXTREMES.--Current year: Maximum discharge, 1,730 ft^3/s (49.0 m^3/s), estimated from water budget figures of peak flows for upstream inflow and diversions, Mar. 8 (gage height, unknown); no flow for several months.
Period of record: Maximum discharge, 28,000 ft^3/s (793 m^3/s), estimated, Jan. 25, 1969 (gage height, unknown); no flow for several months in most years.

REMARKS.--Records poor. Flow regulated by Matilija Reservoir, capacity, 3,800 acre-ft (4.69 hm^3). Flow up to 500 ft^3/s (14.2 m^3/s) diverted since May 1959 at Robles diversion dam to Lake Casitas on Coyote Creek. Flow reported herein is that released through gates in Robles diversion dam.

DISCHARGE, IN CUBIC FEET PER SECOND, WATER YEAR OCTOBER 1974 TO SEPTEMBER 1975
MEAN VALUES

DAY	OCT	NOV	DEC	JAN	FEB	MAR	APR	MAY	JUN	JUL	AUG	SEP
1		0	0	11	9.2	11	14	15	18	6.5		
2		0	0	11	13	11	14	15	17	6.4		
3		0	1.4	11	19	10	13	15	14	7.3		
4		0	25	11	18	10	13	15	14	6.8		
5		0	14	11	16	13	22	15	13	6.8		
6		13	12	10	14	16	10	15	17	6.4		
7		18	9.9	9.7	14	16	9.9	15	16	6.4		
8		9.7	8.6	9.6	12	790	8.2	15	16	4.1		
9		.85	7.5	10	15	.13	6.8	15	16	4.5		
10		.54	6.8	10	15	3.3	6.0	15	14	3.0		
11		.47	6.4	9.7	14	.45	7.7	16	10	2.7		
12		0	6.2	9.4	15	.34	8.2	16	15	3.8		
13		0	7.3	9.6	15	2.2	8.2	16	15	2.5		
14		0	9.0	9.9	15	1.7	8.2	16	14	3.0		
15		0	8.8	10	14	.33	7.7	16	12	1.5		
16		0	8.2	9.4	13	.09	7.7	16	11	3.3		
17		0	8.1	8.9	11	2.5	7.7	16	13	4.1		
18		0	8.1	9.1	11	3.7	9.9	16	11	3.8		
19		0	8.7	9.4	11	3.1	11	16	12	2.3		
20		0	8.9	9.2	10	4.6	11	17	13	1.9		
21		0	9.0	7.9	12	4.6	12	17	12	.97		
22		0	9.5	7.3	12	2.9	16	17	12	.85		
23		0	9.3	8.4	11	1.8	15	17	12	.70		
24		0	9.2	8.8	11	3.0	12	17	13	.60		
25		0	9.2	8.7	9.9	3.3	12	17	12	.50		
26		0	9.8	9.1	10	24	12	17	11	.40		
27		0	9.8	8.8	10	16	11	17	10	.30		
28		0	13	8.5	10	14	10	17	9.7	.30		
29		0	13	8.7	---	14	10	16	10	.25		
30		0	13	9.0	---	13	9.9	17	10	.20		
31		---	11	9.0	---	14	---	18	---	0		---
TOTAL	0	42.56	280.7	293.1	360.1	1010.04	324.1	498	392.7	92.17	0	0
MEAN	0	1.42	9.05	9.45	12.9	32.6	10.8	16.1	13.1	2.97	0	0
MAX	0	18	25	11	19	790	22	18	18	7.3	0	0
MIN	0	0	0	7.3	9.2	.09	6.0	15	9.7	0	0	0
AC-FT	0	84	557	581	714	2000	643	988	779	183	0	0

CAL YR 1974	TOTAL	1517.96	MEAN 4.16	MAX 25	MIN 0	AC-FT	3010
WTR YR 1975	TOTAL	3293.47	MEAN 9.02	MAX 790	MIN 0	AC-FT	6530

NOTE.--No gage-height record Mar. 8-10.

11117500 SAN ANTONIO CREEK AT CASITAS SPRINGS, CALIF.

LOCATION.--Lat 34°22'49", long 119°18'13", in Santa Ana Grant, Ventura County, on downstream side of bridge on U.S. Highway 399, 0.2 mi (0.3 km) upstream from mouth, and 0.9 mi (1.4 km) north of Casitas Springs.

DRAINAGE AREA.--51.2 mi^2 (132.6 km^2).

PERIOD OF RECORD.--October 1949 to current year.

GAGE.--Water-stage recorder. Datum of gage is 306.72 ft (93.488 m) above mean sea level (levels by Ventura County Flood Control District). Prior to Jan. 30, 1962, at datum 0.83 ft (0.253 m) higher.

AVERAGE DISCHARGE.--26 years, 11.3 ft^3/s (0.320 m^3/s), 8,190 acre-ft/yr (10.1 hm^3/yr).

EXTREMES.--Current year: Maximum discharge, 1,900 ft^3/s (53.8 m^3/s) Dec. 4 (gage height, 9.42 ft or 2.871 m); minimum daily, 0.09 ft^3/s (0.003 m^3/s) Oct. 16-18, 25-27.
Period of record: Maximum discharge, 16,200 ft^3/s (459 m^3/s) Jan. 25, 1969 (gage height, 14.30 ft or 4.359 m, from inside gage), from rating curve extended above 2,000 ft^3/s (56.6 m^3/s) on basis of slope-area measurement of maximum flow; no flow for several months in most years.

REMARKS.--Records good. No regulation above station; pumping from wells along creek for irrigation.

COOPERATION.--Records furnished by Ventura County Flood Control District and reviewed by Geological Survey.

DISCHARGE, IN CUBIC FEET PER SECOND, WATER YEAR OCTOBER 1974 TO SEPTEMBER 1975
MEAN VALUES

DAY	OCT	NOV	DEC	JAN	FEB	MAR	APR	MAY	JUN	JUL	AUG	SEP
1	.29	.29	.23	2.8	1.5	2.6	6.5	6.1	4.6	3.3	2.6	1.3
2	.29	.36	.23	2.3	36	2.3	6.1	6.5	4.6	3.3	2.6	1.3
3	.44	.36	8.0	2.1	38	2.1	6.1	6.5	4.6	3.3	2.6	1.3
4	.53	.36	359	2.1	9.5	2.1	6.5	6.1	4.6	3.3	2.3	1.3
5	.44	.36	14	1.9	6.0	6.6	28	6.1	4.2	3.1	2.1	1.3
6	.36	.36	7.0	1.9	3.6	157	20	6.1	4.2	2.8	1.9	1.3
7	.44	.29	4.8	1.9	2.6	122	19	6.1	4.2	2.8	1.7	1.3
8	.53	.36	3.4	1.7	2.3	417	10	6.1	3.9	2.8	1.7	1.5
9	.53	.36	2.9	1.7	52	61	8.8	6.1	3.9	2.3	1.9	1.7
10	.44	.36	6.0	1.7	39	45	7.8	6.1	3.9	2.3	1.9	1.9
11	.44	.36	19	1.7	10	28	6.9	6.1	3.9	2.3	1.9	1.9
12	.29	.29	4.9	1.5	9.3	20	6.5	6.1	3.9	2.6	1.9	1.7
13	.23	.29	2.4	1.5	6.1	18	6.1	6.1	3.9	2.6	1.9	1.7
14	.23	.29	1.7	1.3	4.6	22	6.1	6.1	3.9	2.8	1.9	1.5
15	.17	.36	1.4	1.3	3.9	12	6.5	6.1	3.9	2.8	1.7	1.3
16	.09	.44	1.2	1.3	3.6	12	5.7	6.5	4.2	2.8	1.7	1.3
17	.09	.36	1.2	1.2	3.3	9.8	5.3	6.5	4.2	2.8	1.7	1.3
18	.09	.29	1.1	1.2	3.0	9.3	5.0	6.1	4.2	2.8	1.7	1.2
19	.12	.29	1.0	1.2	3.0	8.8	4.6	6.1	4.2	2.6	1.7	1.0
20	.12	.29	.90	1.2	3.0	8.8	4.2	6.1	4.2	2.6	1.7	1.0
21	.12	.29	.90	1.2	3.0	8.8	4.2	5.7	3.9	2.6	1.7	1.0
22	.12	.23	.80	1.2	2.8	14	4.2	5.3	3.9	2.3	1.7	1.0
23	.12	.23	.70	1.2	2.8	8.8	4.6	5.3	3.9	2.3	1.5	.89
24	.12	.23	.70	1.2	2.8	7.8	5.0	5.3	3.9	2.1	1.3	.76
25	.09	.17	.80	1.2	2.8	7.3	5.0	5.3	3.9	2.1	1.3	.76
26	.09	.17	.80	1.2	2.8	6.9	5.0	5.0	3.6	2.1	1.3	.89
27	.09	.23	1.0	1.0	2.8	6.9	5.0	5.0	3.6	2.1	1.3	.89
28	.85	.29	28	1.0	2.6	6.5	5.0	4.6	3.6	2.1	1.3	1.0
29	.23	.29	16	1.0	---	6.5	5.3	4.6	3.6	2.3	1.3	1.0
30	.17	.29	4.2	1.2	---	6.5	5.7	4.6	3.6	2.3	1.3	1.0
31	.29	---	3.3	1.2	---	6.5	---	4.6	---	2.6	1.3	---
TOTAL	8.45	9.14	497.56	46.1	262.7	1052.9	224.7	178.9	120.7	80.9	54.4	37.29
MEAN	.27	.30	16.1	1.49	9.38	34.0	7.49	5.77	4.02	2.61	1.75	1.24
MAX	.85	.44	359	2.8	52	417	28	6.5	4.6	3.3	2.6	1.9
MIN	.09	.17	.23	1.0	1.5	2.1	4.2	4.6	3.6	2.1	1.3	.76
AC-FT	17	18	987	91	521	2090	446	355	239	160	108	74

CAL YR 1974 TOTAL 2702.71 MEAN 7.40 MAX 683 MIN .09 AC-FT 5360
WTR YR 1975 TOTAL 2573.74 MEAN 7.05 MAX 417 MIN .09 AC-FT 5110

Peak discharge (base, 200 ft^3/s)

Date	Time	G.H.	Discharge	Date	Time	G.H.	Discharge
12-4	0155	9.42	1,900	3-8	0530	8.73	1,180
3-6	0615	7.75	495				

11117600 COYOTE CREEK NEAR OAK VIEW, CALIF.

LOCATION.--Lat 34°25'02", long 119°22'01", in Santa Ana Grant, Ventura County, on right bank 1,000 ft (305 m) downstream from Los Padres National Forest boundary, 0.6 mi (1.0 km) upstream from Poplin Creek, and 4.2 mi (6.8 km) northwest of Oak View.

DRAINAGE AREA.--13.2 mi^2 (34.2 km^2).

PERIOD OF RECORD.--October 1958 to current year.

GAGE.--Water-stage recorder. Datum of gage is 560.47 ft (170.831 m) above mean sea level (Bureau of Reclamation bench mark).

AVERAGE DISCHARGE.--17 years, 6.62 ft^3/s (0.187 m^3/s), 4,800 acre-ft/yr (5.92 hm^3/yr).

EXTREMES.--Current year: Maximum discharge, 894 ft^3/s (25.3 m^3/s) Dec. 4 (gage height, 7.51 ft or 2.289 m); minimum daily, 0.19 ft^3/s (0.005 m^3/s) Oct. 1.
Period of record: Maximum discharge, 8,000 ft^3/s (227 m^3/s) Jan. 25, 1969 (gage height, 12.00 ft or 3.658 m, from floodmarks), from rating curve extended above 2,100 ft^3/s (59.5 m^3/s) on basis of slope-area measurements at gage heights 9.10 ft (2.774 m) and 12.00 ft (3.658 m); no flow at times in some years.

REMARKS.--Records good. No regulation or diversion above station.

COOPERATION.--Two discharge measurements furnished by Casitas Municipal Water District.

DISCHARGE, IN CUBIC FEET PER SECOND, WATER YEAR OCTOBER 1974 TO SEPTEMBER 1975

DAY	OCT	NOV	DEC	JAN	FEB	MAR	APR	MAY	JUN	JUL	AUG	SEP
1	.19	.36	.36	1.6	1.1	2.0	4.8	3.6	1.7	1.3	.48	.34
2	.23	.36	.36	1.4	11	1.9	4.3	3.6	1.7	1.3	.49	.33
3	.23	.36	3.4	1.3	24	1.9	4.2	3.5	1.7	1.3	.47	.30
4	.23	.36	169	1.3	9.7	1.9	4.2	3.4	1.7	1.2	.45	.27
5	.23	.36	4.3	1.3	7.6	3.8	8.5	3.2	1.7	1.1	.41	.27
6	.23	.36	2.1	1.2	4.7	33	8.0	3.0	1.7	1.0	.40	.28
7	.27	.36	1.6	1.2	3.6	207	7.7	3.1	1.7	.98	.40	.27
8	.27	.36	1.3	1.1	3.1	285	6.4	3.1	1.7	.96	.31	.31
9	.23	.36	1.4	1.2	47	55	6.1	3.0	1.7	.94	.36	.33
10	.23	.36	1.4	1.2	56	33	5.7	2.6	1.7	.92	.36	.37
11	.23	.36	1.3	1.2	17	24	5.6	2.5	1.6	.90	.36	.34
12	.23	.36	1.3	1.2	9.7	18	5.4	2.4	1.6	.88	.31	.32
13	.23	.36	1.3	1.2	7.0	18	5.3	2.5	1.6	.86	.36	.31
14	.23	.36	1.5	1.2	5.6	20	5.2	2.5	1.6	.84	.36	.29
15	.23	.37	1.5	1.2	4.6	14	5.4	2.5	1.6	.82	.35	.27
16	.27	.42	1.5	1.2	4.1	12	5.1	2.7	1.5	.80	.34	.25
17	.27	.43	1.5	1.1	3.6	11	4.9	2.6	1.6	.78	.34	.28
18	.27	.39	1.5	1.1	3.3	9.8	4.7	2.4	1.6	.76	.29	.29
19	.27	.40	1.5	1.1	3.0	9.0	4.6	2.4	1.6	.76	.34	.30
20	.31	.36	1.4	1.1	2.8	8.4	4.4	2.5	1.6	.74	.37	.30
21	.31	.43	1.4	1.1	2.6	7.6	4.5	2.4	1.7	.72	.40	.30
22	.31	.46	1.4	1.0	2.5	11	4.5	2.3	1.7	.70	.37	.28
23	.31	.43	1.5	1.0	2.3	7.8	4.4	2.1	1.7	.70	.33	.27
24	.31	.36	1.5	1.0	2.3	7.1	4.3	2.0	1.7	.68	.33	.26
25	.31	.36	1.5	1.0	2.2	6.7	4.3	2.0	1.6	.66	.36	.27
26	.31	.36	1.4	1.0	2.2	6.1	4.0	1.9	1.6	.65	.31	.29
27	.31	.36	1.4	1.0	2.0	5.6	3.9	2.0	1.6	.64	.31	.31
28	.50	.39	19	1.0	2.0	5.3	3.8	2.0	1.6	.62	.31	.33
29	.36	.40	8.0	1.0	------	5.1	3.6	1.8	1.5	.60	.32	.34
30	.31	.36	3.2	1.0	------	4.9	3.6	1.7	1.4	.60	.33	.35
31	.31	------	2.1	1.0	------	5.0	------	1.7	------	.51	.33	------
TOTAL	8.53	11.32	241.92	35.5	246.6	840.9	151.4	79.0	49.0	26.22	11.25	9.02
MEAN	.28	.38	7.80	1.15	8.81	27.1	5.05	2.55	1.63	.85	.36	.30
MAX	.50	.46	169	1.6	56	285	8.5	3.6	1.7	1.3	.49	.37
MIN	.19	.36	.36	1.0	1.1	1.9	3.6	1.7	1.4	.51	.29	.25
AC-FT	17	22	480	70	489	1,670	300	157	97	52	22	18

CAL YR 1974 TOTAL 1,629.72 MEAN 4.47 MAX 484 MIN .12 AC-FT 3,230
WTR YR 1975 TOTAL 1,710.66 MEAN 4.69 MAX 285 MIN .19 AC-FT 3,390

Peak discharge (base, 150 ft^3/s)

Date	Time	G.H.	Discharge	Date	Time	G.H.	Discharge
12-4	0330	7.51	894	3-7	1945	7.32	782
2-10	0745	5.76	174				

11117800 SANTA ANA CREEK NEAR OAK VIEW, CALIF.

LOCATION.--Lat 34°25'25", long 119°20'25", in Santa Ana Grant, Ventura County, on upstream end of right abutment of bridge, 400 ft (122 m) upstream from unnamed tributary, and 3.0 mi (4.8 km) northwest of Oak View.

DRAINAGE AREA.--9.11 mi^2 (23.6 km^2).

PERIOD OF RECORD.--October 1958 to current year.

GAGE.--Water-stage recorder. Datum of gage is 612.43 ft (186.669 m) above mean sea level (Bureau of Reclamation bench mark). Prior to Aug. 17, 1970, on downstream end of right abutment.

AVERAGE DISCHARGE.--17 years, 5.43 ft^3/s (0.154 m^3/s), 3,930 acre-ft/yr (4.85 hm^3/yr).

EXTREMES.--Current year: Maximum discharge, 1,060 ft^3/s (30.0 m^3/s) Dec. 4 (gage height, 7.18 ft or 2.188 m); no flow Oct. 1 to Dec. 2, Aug. 2 to Sept. 30.
Period of record: Maximum discharge, 4,730 ft^3/s (134 m^3/s) Jan. 25, 1969 (gage height, 10.70 ft or 3.261 m); no flow at times in each year.
Flood of Mar. 2, 1938, 3,780 ft^3/s (107 m^3/s), by slope-area measurement at site 2.0 mi (3.2 km) downstream.

REMARKS.--Records fair. No regulation or diversion above station.

COOPERATION.--Three discharge measurements furnished by Casitas Municipal Water District.

DISCHARGE, IN CUBIC FEET PER SECOND, WATER YEAR OCTOBER 1974 TO SEPTEMBER 1975
MEAN VALUES

DAY	OCT	NOV	DEC	JAN	FEB	MAR	APR	MAY	JUN	JUL	AUG	SEP
1			0	1.9	.68	1.3	3.4	2.3	1.1	.10	.01	
2			0	1.7	13	1.2	3.3	2.1	.98	.09	0	
3			6.0	1.6	23	2.3	3.2	2.0	.94	.10	0	
4			178	1.5	9.5	2.3	3.1	2.0	1.0	.09	0	
5			5.8	1.4	7.5	7.0	6.0	1.9	.98	.09	0	
6			3.7	1.3	5.8	48	5.8	1.9	.79	.08	0	
7			2.1	1.2	4.9	177	6.0	1.9	.86	.07	0	
8			1.7	1.1	4.5	273	6.2	1.9	1.0	.07	0	
9			1.5	1.1	52	60	5.8	1.8	.55	.07	0	
10			1.4	1.0	63	38	5.6	1.7	.39	.06	0	
11			1.2	.98	30	26	5.3	1.7	.37	.06	0	
12			1.1	.95	18	22	5.3	1.6	.34	.06	0	
13			1.0	.92	12	20	5.1	1.6	.34	.06	0	
14			.98	.88	10	22	5.1	1.6	.34	.06	0	
15			.94	.86	8.8	13	5.1	1.6	.27	.06	0	
16			.88	.84	7.7	10	4.9	1.7	.22	.06	0	
17			.85	.82	6.5	9.0	4.7	1.6	.27	.06	0	
18			.80	.80	5.4	8.0	4.5	1.5	.24	.06	0	
19			.78	.79	4.8	7.4	4.3	1.5	.23	.06	0	
20			.77	.78	4.0	7.0	4.1	1.6	.21	.06	0	
21			.76	.78	3.5	6.4	4.0	1.4	.20	.05	0	
22			.76	.78	2.9	8.0	3.7	1.4	.19	.04	0	
23			.76	.77	2.5	6.2	3.6	1.4	.18	.04	0	
24			.76	.77	2.3	5.4	3.4	1.3	.16	.04	0	
25			.76	.76	1.9	5.0	3.3	1.2	.15	.04	0	
26			.76	.74	1.7	4.7	3.1	1.1	.14	.03	0	
27			1.5	.72	1.5	4.5	2.9	1.1	.13	.03	0	
28			6.7	.71	1.3	4.1	2.8	1.1	.12	.03	0	
29			4.6	.70	---	3.9	2.7	1.1	.11	.03	0	
30			2.5	.70	---	3.7	2.5	.92	.10	.02	0	
31		---	2.0	.69	---	3.5	---	.99	---	.01	0	---
TOTAL	0	0	231.36	30.54	308.68	809.9	128.8	48.51	12.90	1.78	.01	0
MEAN	0	0	7.46	.99	11.0	26.1	4.29	1.56	.43	.05	.0003	0
MAX	0	0	178	1.9	63	273	6.2	2.3	1.1	.10	.01	0
MIN	0	0	0	.69	.68	1.2	2.5	.92	.10	.01	0	0
AC-FT	0	0	459	61	612	1610	255	96	26	3.5	.02	0

CAL YR 1974 TOTAL 1138.43 MEAN 3.12 MAX 280 MIN 0 AC-FT 2260
WTR YR 1975 TOTAL 1572.48 MEAN 4.31 MAX 273 MIN 0 AC-FT 3120

Peak discharge (base, 150 ft^3/s).--Dec. 4 (0315) 1,060 ft^3/s (7.18 ft); Mar. 8 (0415) 726 ft^3/s (6.65 ft).

11118000 COYOTE CREEK NEAR VENTURA, CALIF.

LOCATION.--Lat 34°21'26", long 119°18'46", near southeast corner of Santa Ana Grant, Ventura County, on right bank 200 ft (61 m) downstream from county highway bridge, 0.3 mi (0.5 km) upstream from mouth, and 5.5 mi (8.8 km) northwest of Ventura.

DRAINAGE AREA.--41.2 mi^2 (106.7 km^2).

PERIOD OF RECORD.--October 1927 to September 1932, October 1933 to September 1958, October 1969 to current year.

GAGE.--Water-stage recorder. Datum of gage is 224.95 ft (68.565 m) above mean sea level (Ventura County Flood Control bench mark). See WSP 1735 for history of changes prior to Oct. 1, 1969.

AVERAGE DISCHARGE.--30 years (1927-32, 1933-58), 13.2 ft^3/s (0.374 m^3/s), 9,560 acre-ft/yr (11.8 hm^3/yr).

EXTREMES.--Current year: Maximum discharge, 116 ft^3/s (3.29 m^3/s) Mar. 8 (gage height, 7.84 ft or 2.390 m); no flow many days.
Period of record: Maximum discharge, 11,500 ft^3/s (326 m^3/s) Mar. 2, 1938, on basis of slope-area measurement of maximum flow; no flow at times in some years.

REMARKS.--Records good. Flow mostly regulated by Casitas Reservoir since October 1959, capacity, 267,000 acre-ft (329 hm^3).

DISCHARGE, IN CUBIC FEET PER SECOND, WATER YEAR OCTOBER 1974 TO SEPTEMBER 1975
MEAN VALUES

DAY	OCT	NOV	DEC	JAN	FEB	MAR	APR	MAY	JUN	JUL	AUG	SEP
1			0	.32	.45	.39	.50	.41	.25	.13	.02	
2			.03	.32	3.9	.37	.48	.40	.25	.12	.02	
3			.93	.32	1.6	.36	.49	.39	.28	.13	.02	
4			18	.32	.36	.40	1.3	.36	.28	.13	.02	
5			.36	.32	.28	.61	1.9	.35	.25	.12	0	
6			.32	.32	.24	1.5	.61	.36	.25	.11	0	
7			.28	.32	.23	8.5	.45	.37	.25	.11	0	
8			.28	.32	.26	34	.45	.37	.25	.12	0	
9			.28	.36	3.0	3.4	.40	.38	.25	.12	0	
10			.28	.36	1.5	2.3	.40	.38	.19	.09	0	
11			.28	.36	.67	1.3	.40	.33	.19	.09	0	
12			.28	.36	.61	1.6	.40	.34	.19	.09	0	
13			.28	.36	.55	1.3	.40	.34	.19	.10	0	
14			.32	.36	.55	1.1	.40	.33	.19	.10	0	
15			.32	.36	.50	.74	.36	.35	.19	.10	0	
16			.32	.36	.50	.67	.36	.35	.22	.10	0	
17			.32	.36	.50	.55	.40	.31	.22	.10	0	
18			.31	.36	.50	.50	.40	.29	.19	.10	0	
19			.32	.36	.50	.45	.40	.31	.19	.11	0	
20			.32	.36	.50	.45	.40	.29	.16	.10	0	
21			.32	.36	.50	.40	.40	.27	.16	.09	0	
22			.32	.36	.50	.88	.42	.28	.16	.08	0	
23			.32	.36	.48	.45	.42	.27	.16	.07	0	
24			.33	.36	.48	.45	.43	.25	.17	.07	0	
25			.32	.36	.44	.50	.42	.25	.15	.07	0	
26			.36	.36	.41	.57	.39	.24	.14	.06	0	
27			.48	.36	.40	.57	.40	.28	.14	.05	0	
28			4.8	.32	.39	.53	.40	.25	.14	.05	0	
29			.69	.36	---	.52	.39	.25	.15	.05	0	
30			.33	.36	---	.51	.42	.25	.14	.04	0	
31		---	.32	.36	---	.52	---	.25	---	.02	0	---
TOTAL	0	0	32.42	10.80	20.80	66.39	14.99	9.85	5.94	2.82	.08	0
MEAN	0	0	1.05	.35	.74	2.14	.50	.32	.20	.091	.003	0
MAX	0	0	18	.36	3.9	34	1.9	.41	.28	.13	.02	0
MIN	0	0	0	.32	.23	.36	.36	.24	.14	.02	0	0
AC-FT	0	0	64	21	41	132	30	20	12	5.6	.2	0

CAL YR 1974 TOTAL 129.50 MEAN .35 MAX 30 MIN 0 AC-FT 257
WTR YR 1975 TOTAL 164.09 MEAN .45 MAX 34 MIN 0 AC-FT 325

11118500 VENTURA RIVER NEAR VENTURA, CALIF.

LOCATION.--Lat 34°21'08", long 119°18'27", in southeast corner of Santa Ana Grant, Ventura County, on right bank 50 ft (15 m) downstream from county road bridge at Foster Memorial Park, 0.2 mi (0.3 km) downstream from Coyote Creek, and 5 mi (8 km) north of Ventura.

DRAINAGE AREA.--188 mi^2 (487 km^2).

PERIOD OF RECORD.--September 1911 to January 1914, October 1929 to current year; combined records of river and diversion, October 1932 to current year.

GAGE.--Water-stage recorder on river; water-stage recorder and Parshall flume on diversion. Datum of gage is 205.23 ft (62.554 m) above mean sea level (Ventura County Flood Control bench mark). See WSP 1315-B for history of changes prior to Nov. 2, 1949. Nov. 2, 1949, to June 12, 1969, at site 450 ft (137 m) downstream at datum 4.00 ft (1.219 m) lower.

AVERAGE DISCHARGE (River only).--48 years (1911-13, 1929-75), 54.9 ft^3/s (1.555 m^3/s), 39,780 acre-ft/yr (49.0 hm^3/yr).
(Combined river and diversion).--43 years, 64.1 ft^3/s (1.815 m^3/s), 46,440 acre-ft/yr (57.3 hm^3/yr).

EXTREMES (River only).--Current year: Maximum discharge, 5,150 ft^3/s (146 m^3/s) Mar. 8 (gage height, 11.07 ft or 3.374 m); minimum daily, 0.38 ft^3/s (0.011 m^3/s) Sept. 26.
Period of record: Maximum discharge, 58,000 ft^3/s (1,640 m^3/s) Jan. 25, 1969 (gage height, 24.3 ft or 7.41 m, present datum, from floodmarks), from rating curve extended above 19,600 ft^3/s (555 m^3/s) on basis of contracted-opening measurement of maximum flow; no flow at times in many years.
(Combined flow).--Current year: Maximum discharge, 5,160 ft^3/s (146 m^3/s) Mar. 8; minimum daily, 2.9 ft^3/s (0.082 m^3/s) Nov. 28.
Period of record: Maximum discharge, 58,000 ft^3/s (1,640 m^3/s) Jan. 25, 1969; minimum daily, 0.10 ft^3/s (0.003 m^3/s) Sept. 3, 4, 13, 1961

REMARKS.--Records fair. Flow partly regulated since March 1948 by Matilija Reservoir, capacity, 3,800 acre-ft (4.69 hm^3) and since October 1959 by Casitas Reservoir, capacity, 267,000 acre-ft (329 hm^3). Water diverted to Casitas Reservoir on Coyote Creek since January 1959. Diversion by city of Ventura for municipal supply began prior to 1911. AVERAGE DISCHARGE (River only) represents flow to ocean regardless of upstream development. For records of combined discharge of river and Ventura City diversion, see following page.

DISCHARGE, IN CUBIC FEET PER SECOND, WATER YEAR OCTOBER 1974 TO SEPTEMBER 1975
MEAN VALUES

DAY	OCT	NOV	DEC	JAN	FEB	MAR	APR	MAY	JUN	JUL	AUG	SEP
1	3.8	1.8	2.3	10	7.7	4.9	13	14	9.2	6.0	2.0	1.5
2	4.4	1.7	1.3	9.5	57	5.9	14	13	8.2	5.5	2.8	1.6
3	4.5	2.2	2.9	9.2	67	6.7	15	15	7.2	4.8	4.1	1.0
4	.70	1.7	905	9.2	17	7.2	18	17	7.7	4.8	3.1	1.5
5	4.1	2.5	20	9.2	11	17	60	14	8.7	6.2	1.8	1.4
6	4.0	1.7	12	8.8	8.5	223	60	9.8	8.2	7.0	2.1	2.1
7	3.8	1.8	9.6	8.5	8.1	236	50	7.2	10	5.6	3.1	2.4
8	6.0	1.6	7.8	8.5	7.5	2140	24	7.2	9.8	4.2	2.1	1.5
9	3.4	2.4	7.8	9.1	123	99	17	7.7	9.8	4.0	2.9	2.3
10	5.0	1.3	6.8	9.4	83	72	15	12	5.2	3.9	3.1	2.3
11	3.0	1.7	11	9.5	26	38	12	15	4.5	4.0	2.3	1.2
12	2.8	.68	6.8	9.2	20	16	10	9.2	5.1	6.8	2.0	2.0
13	2.6	1.3	5.4	9.3	14	15	11	9.8	6.8	8.7	1.3	2.4
14	2.2	1.4	5.2	9.6	12	29	15	11	12	5.7	1.8	2.0
15	4.0	1.6	4.9	9.2	13	12	15	16	9.8	3.7	2.3	1.1
16	.70	1.8	6.8	9.2	12	11	15	14	6.4	4.8	2.4	.94
17	2.0	1.9	7.1	8.9	12	8.8	13	18	6.4	5.0	4.0	.83
18	2.0	1.4	7.1	8.8	11	7.8	9.8	24	6.1	4.8	2.6	1.1
19	2.0	2.6	6.8	8.8	11	7.1	11	24	5.7	5.7	1.4	.91
20	2.0	2.8	4.4	8.9	11	6.0	15	15	6.1	5.7	1.7	1.1
21	.90	2.7	6.2	8.8	10	6.0	10	9.7	8.7	4.8	2.5	1.9
22	1.8	1.4	6.8	8.5	13	22	12	9.6	9.2	4.2	4.1	1.0
23	1.8	2.6	6.8	8.5	12	12	14	10	5.7	4.8	4.0	.65
24	1.5	2.6	7.1	8.4	11	8.5	14	14	4.8	5.4	4.4	.51
25	.70	1.0	7.1	8.5	10	11	15	13	6.8	3.7	2.4	.44
26	1.5	1.5	7.8	8.5	9.6	13	19	9.0	5.3	5.1	1.4	.38
27	1.5	1.6	8.5	8.5	9.8	15	16	6.9	5.1	5.5	1.5	.97
28	1.5	2.6	39	8.5	6.3	17	9.2	10	6.1	5.1	1.7	.68
29	1.5	1.6	21	7.8	---	20	10	11	6.1	5.4	1.9	.97
30	1.5	2.2	12	6.5	---	24	15	11	6.3	4.9	1.2	1.3
31	1.5	---	11	6.7	---	19	---	10	---	2.6	1.4	---
TOTAL	78.70	55.68	1174.3	272.0	613.5	3129.9	547.0	387.1	217.0	158.4	75.4	39.98
MEAN	2.54	1.86	37.9	8.77	21.9	101	18.2	12.5	7.23	5.11	2.43	1.33
MAX	6.0	2.8	905	10	123	2140	60	24	12	8.7	4.4	2.4
MIN	.70	.68	1.3	6.5	6.3	4.9	9.2	6.9	4.5	2.6	1.2	.38
AC-FT	156	110	2330	540	1220	6210	1080	768	430	314	150	79

CAL YR 1974 TOTAL 7830.58 MEAN 21.5 MAX 1800 MIN .68 AC-FT 15530
WTR YR 1975 TOTAL 6748.96 MEAN 18.5 MAX 2140 MIN .38 AC-FT 13390

11118500 VENTURA RIVER NEAR VENTURA, CALIF.--Continued

COMBINED DISCHARGE, IN CUBIC FEET PER SECOND, OF VENTURA RIVER AND VENTURA CITY DIVERSION NEAR VENTURA, CALIF., WATER YEAR OCTOBER 1974 TO SEPTEMBER 1975

DISCHARGE, IN CUBIC FEET PER SECOND, WATER YEAR OCTOBER 1974 TO SEPTEMBER 1975
MEAN VALUES

DAY	OCT	NOV	DEC	JAN	FEB	MAR	APR	MAY	JUN	JUL	AUG	SEP
1	7.6	9.4	5.5	10	8.1	16	24	24	19	18	19	11
2	7.3	4.6	7.0	9.9	57	15	24	26	21	17	14	17
3	6.8	5.6	5.5	9.6	73	16	25	23	20	21	12	13
4	7.7	5.0	907	9.6	23	17	27	24	18	16	20	14
5	7.4	5.9	22	9.6	21	26	70	27	20	15	18	12
6	6.7	6.8	15	9.2	14	231	65	24	17	16	12	9.0
7	7.5	6.5	13	8.9	16	246	60	19	15	21	16	11
8	6.4	5.2	10	8.9	13	2150	34	20	16	19	14	14
9	7.3	6.1	9.8	9.5	131	105	27	21	18	19	14	9.8
10	6.0	6.6	13	9.8	93	82	24	22	23	19	13	14
11	5.1	7.4	16	9.9	32	48	20	24	22	17	16	13
12	6.3	10	11	9.6	28	26	19	23	18	15	17	11
13	5.8	3.0	11	9.7	24	25	20	24	17	17	14	12
14	5.1	5.3	9.4	10	22	39	24	24	17	22	13	13
15	4.7	8.0	5.3	9.6	21	21	24	27	16	17	14	15
16	7.9	5.1	7.1	9.6	21	16	23	27	21	16	12	12
17	4.3	7.6	7.5	9.3	18	19	23	28	17	16	12	14
18	4.7	4.8	7.5	9.2	21	18	19	32	19	16	19	9.6
19	5.0	3.1	9.1	9.2	19	16	19	36	21	15	15	15
20	4.8	3.7	10	9.3	20	16	20	27	18	15	14	9.5
21	5.8	8.1	6.5	9.2	20	19	21	22	16	18	15	11
22	3.5	6.1	7.2	8.9	20	34	20	24	17	15	14	14
23	4.3	5.0	7.2	8.9	20	21	22	22	22	14	11	13
24	5.4	5.6	7.5	8.8	21	21	24	22	20	15	14	13
25	5.8	8.3	7.5	8.9	20	23	23	21	16	19	18	12
26	4.6	4.7	8.2	8.9	19	25	26	22	19	13	14	12
27	4.6	5.9	8.9	8.9	20	26	23	22	18	13	13	10
28	11	2.9	39	8.9	18	25	26	20	18	15	13	12
29	5.5	8.2	21	10	---	27	20	20	17	13	15	11
30	4.1	5.5	12	12	---	30	22	21	15	16	11	12
31	6.2	---	11	8.4	---	28	---	18	---	20	12	---
TOTAL	185.2	180.0	1237.7	292.2	833.1	3427	818	736	551	518	448	368.9
MEAN	5.97	6.00	39.9	9.43	29.8	111	27.3	23.7	18.4	16.7	14.5	12.3
MAX	11	10	907	12	131	2150	70	36	23	22	20	17
MIN	3.5	2.9	5.3	8.4	8.1	15	19	18	15	13	11	9.0
AC-FT	367	357	2450	580	1650	6800	1620	1460	1090	1030	889	732

CAL YR 1974 TOTAL 9610.6 MEAN 26.3 MAX 1810 MIN 2.9 AC-FT 19060
WTR YR 1975 TOTAL 9595.1 MEAN 26.3 MAX 2150 MIN 2.9 AC-FT 19030

11118500 VENTURA RIVER NEAR VENTURA, CALIF.--Continued

PERIOD OF RECORD.--Chemical analyses: December 1907 to December 1908, October 1966 to September 1968, water years 1969 to current year (partial-record station).
Water temperatures: October 1968 to September 1969, October 1970 to September 1973, October 1974 to current year.
Sediment records: October 1968 to September 1973, October 1974 to current year.

EXTREMES.--Current year:
Sediment concentrations: Maximum daily, 2,640 mg/l Dec. 4; minimum daily, 3 mg/l Jan. 29 to Feb. 1.
Sediment discharge: Maximum daily, 18,300 tons (16,600 tonnes) Mar. 8; minimum daily, 0 tons (0 tonnes) Sept. 26.
Period of record:
Sediment concentrations: Maximum daily, 32,000 mg/l (estimated) Jan. 25, 1969; minimum daily, no flow for many days most years.
Sediment discharge: Maximum daily, 2,220,000 tons (2,014,000 tonnes), estimated, Jan. 25, 1969; minimum daily, 0 tons (0 tonnes) on many days most years.

REMARKS.--Chemical-quality records furnished by California Department of Water Resources.

WATER QUALITY DATA, WATER YEAR OCTOBER 1974 TO SEPTEMBER 1975

DATE	TIME	INSTANTANEOUS DISCHARGE (CFS)	DISSOLVED SULFATE (SO4) (MG/L)	DISSOLVED CHLORIDE (CL) (MG/L)	DISSOLVED SOLIDS (RESIDUE AT 180 C) (MG/L)	DISSOLVED SOLIDS (TONS PER AC-FT)	HARDNESS (CA,MG) (MG/L)	SPECIFIC CONDUCTANCE (MICROMHOS)	PH (UNITS)	TEMPERATURE (DEG C)	TURBIDITY (JTU)	DISSOLVED OXYGEN (MG/L)
NOV.												
18...	0830	1.1	266	45	755	1.03	452	925	7.3	13.5	5	6.7
JAN.												
20...	0830	8.9	255	45	719	.98	415	950	7.7	13.0	1	9.2
APR.												
21...	0730	12	257	42	693	.94	447	900	7.7	14.0	2	9.6
JULY												
21...	0730	3.3	253	41	738	1.00	448	1050	7.4	18.0	0	7.0

TEMPERATURE (DEG. C) OF WATER, WATER YEAR OCTOBER 1974 TO SEPTEMBER 1975
ONCE-DAILY

DAY	OCT	NOV	DEC	JAN	FEB	MAR	APR	MAY	JUN	JUL	AUG	SEP
1	---	---	---	---	13.0	---	---	---	---	---	---	---
2	---	18.0	---	---	12.0	---	19.0	---	20.0	---	---	20.0
3	---	---	---	---	15.0	---	---	---	---	---	---	---
4	---	---	15.0	15.0	15.0	---	---	---	---	---	---	---
5	22.0	---	15.0	---	12.0	15.0	15.0	---	---	22.0	23.0	---
6	---	---	12.0	---	---	13.0	14.0	20.0	---	---	---	---
7	---	---	---	---	---	14.0	10.0	---	21.0	---	---	20.0
8	---	18.0	---	---	12.0	15.0	10.0	---	---	---	---	---
9	---	---	---	---	14.0	12.0	13.0	---	---	---	---	---
10	---	---	---	---	15.0	14.0	---	---	---	23.0	---	---
11	---	---	---	15.0	10.0	10.0	---	21.0	---	---	22.0	---
12	22.0	---	---	---	12.0	10.0	---	---	---	---	---	---
13	---	---	---	---	13.0	14.0	---	---	22.0	---	---	20.0
14	---	---	15.0	---	---	10.0	17.0	---	---	---	---	---
15	---	---	---	---	---	10.0	---	---	---	22.0	---	---
16	---	17.0	---	---	---	12.0	---	18.0	---	---	22.0	---
17	---	---	---	---	---	---	---	---	---	---	---	---
18	---	---	---	17.0	---	---	---	---	20.0	---	---	20.0
19	14.0	---	---	---	---	---	20.0	---	---	---	---	---
20	---	---	---	---	---	---	---	---	---	22.0	---	---
21	---	---	16.0	---	15.0	17.0	---	---	---	---	---	---
22	---	---	---	---	---	13.0	---	20.0	---	---	21.0	---
23	---	17.0	---	---	---	---	---	---	20.0	---	---	22.0
24	---	---	---	---	---	---	16.0	---	---	---	---	---
25	---	---	---	17.0	---	---	---	---	---	22.0	---	---
26	19.0	---	---	---	---	---	---	---	---	---	---	---
27	---	---	---	---	---	---	---	---	---	---	---	---
28	---	---	11.0	---	16.0	18.0	---	19.0	---	---	---	---
29	---	---	13.0	---	---	---	---	---	20.0	---	---	19.0
30	---	15.0	12.0	---	---	---	19.0	---	---	22.0	---	18.5
31	---	---	---	---	---	---	---	---	---	---	---	---
MONTH	---	---	---	---	---	---	---	---	---	---	---	---

11118500 VENTURA RIVER NEAR VENTURA, CALIF.--Continued

SUSPENDED-SEDIMENT DISCHARGE (TONS/DAY), WATER YEAR OCTOBER 1974 TO SEPTEMBER 1975

	OCTOBER			NOVEMBER			DECEMBER		
DAY	MEAN DISCHARGE (CFS)	MEAN CONCEN-TRATION (MG/L)	SEDIMENT DISCHARGE (TONS/DAY)	MEAN DISCHARGE (CFS)	MEAN CONCEN-TRATION (MG/L)	SEDIMENT DISCHARGE (TONS/DAY)	MEAN DISCHARGE (CFS)	MEAN CONCEN-TRATION (MG/L)	SEDIMENT DISCHARGE (TONS/DAY)
1	3.8	15	.15	1.8	7	.03	2.3	10	.06
2	4.4	15	.18	1.7	7	.03	1.3	9	.03
3	4.5	20	.24	2.2	8	.05	2.9	8	.06
4	.70	15	.03	1.7	9	.04	905	2640	14800
5	4.1	30	.33	2.5	9	.06	20	40	2.2
6	4.0	25	.27	1.7	8	.04	12	15	.49
7	3.8	25	.26	1.8	8	.04	9.6	11	.29
8	6.0	25	.41	1.6	8	.03	7.8	10	.21
9	3.4	20	.18	2.4	9	.06	7.8	10	.21
10	5.0	20	.27	1.3	9	.03	6.8	13	.24
11	3.0	20	.16	1.7	8	.04	11	12	.36
12	2.8	20	.15	.68	8	.01	6.8	12	.22
13	2.6	15	.11	1.3	10	.04	5.4	11	.16
14	2.2	15	.09	1.4	13	.05	5.2	10	.14
15	4.0	14	.15	1.6	15	.06	4.9	11	.15
16	.70	13	.02	1.8	20	.10	6.8	11	.20
17	2.0	12	.06	1.9	20	.10	7.1	12	.23
18	2.0	11	.06	1.4	20	.08	7.1	12	.23
19	2.0	10	.05	2.6	20	.14	6.8	11	.20
20	2.0	10	.05	2.8	20	.15	4.4	11	.13
21	.90	10	.02	2.7	20	.15	6.2	11	.18
22	1.8	10	.05	1.4	20	.08	6.8	11	.20
23	1.8	9	.04	2.6	20	.14	6.8	12	.22
24	1.5	9	.04	2.6	20	.14	7.1	13	.25
25	.70	10	.02	1.0	15	.04	7.1	14	.27
26	1.5	12	.05	1.5	10	.04	7.8	15	.32
27	1.5	11	.04	1.6	15	.06	8.5	20	.46
28	1.5	10	.04	2.6	20	.14	39	135	14
29	1.5	9	.04	1.6	15	.06	21	95	5.4
30	1.5	8	.03	2.2	10	.06	12	10	.32
31	1.5	8	.03	---	---	---	11	5	.15
TOTAL	78.70	---	3.62	55.68	---	2.09	1174.3	---	14827.58

	JANUARY			FEBRUARY			MARCH		
DAY	MEAN DISCHARGE (CFS)	MEAN CONCEN-TRATION (MG/L)	SEDIMENT DISCHARGE (TONS/DAY)	MEAN DISCHARGE (CFS)	MEAN CONCEN-TRATION (MG/L)	SEDIMENT DISCHARGE (TONS/DAY)	MEAN DISCHARGE (CFS)	MEAN CONCEN-TRATION (MG/L)	SEDIMENT DISCHARGE (TONS/DAY)
1	10	5	.14	7.7	3	.06	4.9	25	.33
2	9.5	5	.13	57	145	56	5.9	20	.32
3	9.2	5	.12	67	175	52	6.7	20	.36
4	9.2	5	.12	17	20	.92	7.2	20	.39
5	9.2	5	.12	11	8	.24	17	20	.92
6	8.8	5	.12	8.5	6	.14	223	1260	1050
7	8.5	5	.11	8.1	5	.11	236	760	881
8	8.5	4	.09	7.5	4	.08	2140	2270	18300
9	9.1	4	.10	123	310	255	99	150	40
10	9.4	4	.10	83	170	73	72	40	7.8
11	9.5	4	.10	26	35	2.5	38	30	3.1
12	9.2	4	.10	20	25	1.4	16	30	1.3
13	9.3	4	.10	14	20	.76	15	25	1.0
14	9.6	5	.13	12	15	.49	29	90	7.0
15	9.2	5	.12	13	15	.53	12	35	1.1
16	9.2	5	.12	12	13	.42	11	15	.45
17	8.9	5	.12	12	12	.39	8.8	12	.29
18	8.8	5	.12	11	11	.33	7.8	11	.23
19	8.8	5	.12	11	10	.30	7.1	10	.19
20	8.9	5	.12	11	9	.27	6.0	10	.16
21	8.8	5	.12	10	9	.24	6.0	20	.32
22	8.5	4	.09	13	20	.70	22	40	2.4
23	8.5	4	.09	12	30	.97	12	30	.97
24	8.4	4	.09	11	30	.89	8.5	20	.46
25	8.5	4	.09	10	25	.68	11	15	.45
26	8.5	4	.09	9.6	25	.65	13	20	.70
27	8.5	4	.09	9.8	25	.66	15	25	1.0
28	8.5	4	.09	6.3	25	.43	17	30	1.4
29	7.8	3	.06	---	---	---	20	35	1.9
30	6.5	3	.05	---	---	---	24	40	2.6
31	6.7	3	.05	---	---	---	19	35	1.8
TOTAL	272.0	---	3.21	613.5	---	450.16	3129.9	---	20309.94

11118500 VENTURA RIVER NEAR VENTURA, CALIF.--Continued

SUSPENDED-SEDIMENT DISCHARGE (TONS/DAY), WATER YEAR OCTOBER 1974 TO SEPTEMBER 1975

	APRIL			MAY			JUNE		
DAY	MEAN DISCHARGE (CFS)	MEAN CONCEN-TRATION (MG/L)	SEDIMENT DISCHARGE (TONS/DAY)	MEAN DISCHARGE (CFS)	MEAN CONCEN-TRATION (MG/L)	SEDIMENT DISCHARGE (TONS/DAY)	MEAN DISCHARGE (CFS)	MEAN CONCEN-TRATION (MG/L)	SEDIMENT DISCHARGE (TONS/DAY)
1	13	25	.88	14	20	.76	9.2	7	.17
2	14	20	.76	13	20	.70	8.2	7	.16
3	15	20	.81	15	25	1.0	7.2	6	.12
4	18	15	.73	17	45	2.1	7.7	6	.12
5	60	175	28	14	40	1.5	8.7	6	.14
6	60	55	8.9	9.8	35	.93	8.2	6	.13
7	50	80	11	7.2	25	.49	10	7	.19
8	24	40	2.6	7.2	25	.49	9.8	7	.19
9	17	50	2.3	7.7	30	.62	9.8	6	.16
10	15	45	1.8	12	35	1.1	5.2	5	.07
11	12	35	1.1	15	40	1.6	4.5	5	.06
12	10	30	.81	9.2	25	.62	5.1	5	.07
13	11	25	.74	9.8	20	.53	6.8	6	.11
14	15	20	.81	11	15	.45	12	7	.23
15	15	20	.81	16	10	.43	9.8	6	.16
16	15	15	.61	14	8	.30	6.4	5	.09
17	13	14	.49	18	9	.44	6.4	4	.07
18	9.8	12	.32	24	10	.65	6.1	4	.07
19	11	10	.30	24	10	.65	5.7	4	.06
20	15	15	.61	15	9	.36	6.1	5	.08
21	10	10	.27	9.7	8	.21	8.7	6	.14
22	12	15	.49	9.6	7	.18	9.2	7	.17
23	14	25	.95	10	6	.16	5.7	7	.11
24	14	30	1.1	14	5	.19	4.8	7	.09
25	15	35	1.4	13	5	.18	6.8	6	.11
26	19	25	1.3	9.0	5	.12	5.3	6	.09
27	16	20	.86	6.9	4	.07	5.1	6	.08
28	9.2	15	.37	10	5	.14	6.1	6	.10
29	10	20	.54	11	7	.21	6.1	6	.10
30	15	20	.81	11	8	.24	6.3	6	.10
31	---	---	---	10	8	.22	---	---	---
TOTAL	547.0	---	72.47	387.1	---	17.64	217.0	---	3.54

	JULY			AUGUST			SEPTEMBER		
DAY	MEAN DISCHARGE (CFS)	MEAN CONCEN-TRATION (MG/L)	SEDIMENT DISCHARGE (TONS/DAY)	MEAN DISCHARGE (CFS)	MEAN CONCEN-TRATION (MG/L)	SEDIMENT DISCHARGE (TONS/DAY)	MEAN DISCHARGE (CFS)	MEAN CONCEN-TRATION (MG/L)	SEDIMENT DISCHARGE (TONS/DAY)
1	6.0	6	.10	2.0	9	.05	1.5	35	.14
2	5.5	6	.09	2.8	9	.07	1.6	40	.17
3	4.8	7	.09	4.1	15	.17	1.0	40	.11
4	4.8	10	.13	3.1	20	.17	1.5	35	.14
5	6.2	15	.25	1.8	30	.15	1.4	35	.13
6	7.0	20	.38	2.1	25	.14	2.1	40	.23
7	5.6	15	.23	3.1	30	.25	2.4	40	.26
8	4.2	12	.14	2.1	25	.14	1.5	35	.14
9	4.0	10	.11	2.9	30	.23	2.3	30	.19
10	3.9	7	.07	3.1	35	.29	2.3	30	.19
11	4.0	15	.16	2.3	30	.19	1.2	25	.08
12	6.8	30	.55	2.0	30	.16	2.0	25	.14
13	8.7	40	.94	1.3	25	.09	2.4	20	.13
14	5.7	35	.54	1.8	25	.12	2.0	20	.11
15	3.7	30	.30	2.3	30	.19	1.1	15	.04
16	4.8	25	.32	2.4	30	.19	.94	15	.04
17	5.0	20	.27	4.0	25	.27	.83	12	.03
18	4.8	15	.19	2.6	20	.14	1.1	11	.03
19	5.7	10	.15	1.4	15	.06	.91	10	.02
20	5.7	6	.09	1.7	10	.05	1.1	9	.03
21	4.8	7	.09	2.5	8	.05	1.9	8	.04
22	4.2	8	.09	4.1	7	.08	1.0	7	.02
23	4.8	10	.13	4.0	8	.09	.65	6	.01
24	5.4	12	.18	4.4	9	.11	.51	5	.01
25	3.7	14	.14	2.4	10	.06	.44	5	.01
26	5.1	13	.18	1.4	13	.05	.38	4	0
27	5.5	12	.18	1.5	15	.06	.97	4	.01
28	5.1	12	.17	1.7	20	.09	.68	4	.01
29	5.4	11	.16	1.9	20	.10	.97	4	.01
30	4.9	10	.13	1.2	25	.08	1.3	10	.04
31	2.6	10	.07	1.4	30	.11	---	---	---
TOTAL	158.4	---	6.62	75.4	---	4.00	39.98	---	2.51
YEAR	6748.96		35703.38						

11118500 VENTURA RIVER NEAR VENTURA, CALIF.--Continued

PARTICLE-SIZE DISTRIBUTION OF SUSPENDED SEDIMENT, WATER YER OCTOBER 1974 TO SEPTEMBER 1975

DATE	TIME	TEMPER-ATURE (DEG C)	INSTAN-TANEOUS DIS-CHARGE (CFS)	SUS-PENDED SEDI-MENT (MG/L)	SUS-PENDED SEDI-MENT DIS-CHARGE (T/DAY)	SUS. SED. FALL DIAM. % FINER THAN .002 MM	SUS. SED. FALL DIAM. % FINER THAN .004 MM	SUS. SED. FALL DIAM. % FINER THAN .008 MM	SUS. SED. FALL DIAM. % FINER THAN .016 MM
DEC.									
04...	0800	13.0	1610	4500	19600	43	56	71	85
04...	1230	15.0	198	1280	684	58	75	90	97
04...	1600	15.0	82	498	110	71	87	95	98
28...	0800	10.0	34	126	12	--	--	--	--
FEB.									
09...	1200	12.0	524	1300	1840	55	69	83	93
10...	1200	15.0	127	284	97	73	87	94	100
MAR.									
06...	0815	11.0	368	2990	2970	53	64	81	93
07...	1610	15.0	68	105	19	--	--	--	--
08...	0800	12.0	3590	3790	36700	30	37	49	61
08...	1200	13.0	2230	2030	12200	35	44	56	68

DATE	SUS. SED. FALL DIAM. % FINER THAN .031 MM	SUS. SED. FALL DIAM. % FINER THAN .062 MM	SUS. SED. SIEVE DIAM. % FINER THAN .062 MM	SUS. SED. FALL DIAM. % FINER THAN .125 MM	SUS. SED. SIEVF DIAM. % FINER THAN .125 MM	SUS. SED. FALL DIAM. % FINER THAN .250 MM	SUS. SED. SIEVE DIAM. % FINER THAN .250 MM	SUS. SED. FALL DIAM. % FINER THAN .500 MM	SUS. SED. SIEVE DIAM. % FINER THAN .500 MM
DEC.									
04...	95	98	--	99	--	100	--	--	--
04...	99	--	100	--	--	--	--	--	--
04...	99	--	99	--	99	--	100	--	--
28...	--	--	92	--	93	--	95	--	100
FEB.									
09...	99	99	--	100	--	--	--	--	--
10...	--	--	--	--	--	--	--	--	--
MAR.									
06...	99	--	100	--	--	--	--	--	--
07...	--	--	99	--	100	--	--	--	--
08...	75	86	--	94	--	99	--	100	--
08...	81	89	--	95	--	99	--	100	--

11119500 CARPINTERIA CREEK NEAR CARPINTERIA, CALIF.

LOCATION.--Lat 34°24'05", long 119°29'10", in El Rincon Grant, Santa Barbara County, on right bank at downstream side of bridge on State Highway 150, 235 ft (72 m) downstream from Gobernador Creek, and 1.8 mi (2.9 km) northeast of Carpinteria.

DRAINAGE AREA. 13.1 mi^2 (33.9 km^2).

PERIOD OF RECORD.--January 1941 to current year.

GAGE.--Water stage recorder. Altitude of gage is 130 ft (40 m), from topographic map. Prior to July 1, 1958, at datum 6.00 ft (1.829 m) higher. July 2, 1958, to Aug. 27, 1970, at site 35 ft (11 m) upstream at datum 4.00 ft (1.219 m) higher.

AVERAGE DISCHARGE. 34 years, 3.01 ft^3/s (0.0852 m^3/s), 2,180 acre-ft/yr (2.69 hm^3/yr).

EXTREMES. Current year: Maximum discharge, 569 ft^3/s (16.1 m^3/s) Dec. 4 (gage height, 3.49 ft or 1.064 m); no flow many days.

Period of record: Maximum discharge, 8,880 ft^3/s (251 m^3/s) Dec. 27, 1971 (gage height, 14.10 ft or 4.298 m, from floodmark), from rating curve extended above 130 ft^3/s (3.68 m^3/s) on basis of slope-area measurement of maximum flow; no flow at times in each year.

REMARKS.--Records good except those for periods of no gage-height record, which are fair. No regulation above station. Gobernador Land and Water Co. diverts from Gobernador Creek 1.8 mi (2.9 km) above station. Small lake 0.8 mi (1.3 km) southeast of station and outside the drainage area stores storm runoff and surplus water diverted by Gobernador Land and Water Co. from Gobernador Creek. At times this lake is drained by pumping water back into Gobernador Creek 1,000 ft (305 m) above station.

DISCHARGE, IN CUBIC FEET PER SECOND, WATER YEAR OCTOBER 1974 TO SEPTEMBER 1975
MEAN VALUES

DAY	OCT	NOV	DEC	JAN	FEB	MAR	APR	MAY	JUN	JUL	AUG	SEP
1	0		0	.39	1.0	.76	2.5	1.0	.19			
2	0		0	.30	22	.76	2.3	.96	.19			
3	0		36	.22	25	.67	2.3	.85	.19			
4	0		118	.13	15	.67	2.0	.75	.23			
5	0		5.0	.12	9.8	2.9	5.8	1.9	.19			
6	0		3.0	0	8.0	13	4.8	2.9	.10			
7	0		1.1	0	5.6	40	4.0	.66	.10			
8	.01		.42	0	2.0	113	3.0	.52	.11			
9	0		.15	0	66	25	2.8	.49	.11			
10	0		.02	0	57	17	2.5	.49	.09			
11	0		0	0	22	11	2.2	.45	.08			
12	0		0	0	13	8.4	2.1	.45	.07			
13	0		0	0	9.0	9.7	2.0	.40	.06			
14	0		0	0	7.0	9.7	2.1	.40	.05			
15	0		0	0	6.0	6.8	2.2	.40	.04			
16	0		0	0	4.5	6.6	1.9	.40	.03			
17	0		0	0	4.0	6.2	1.9	.35	.02			
18	0		0	0	3.3	6.0	1.7	.35	.01			
19	0		0	0	2.8	5.7	1.6	.35	0			
20	0		0	.94	2.4	5.3	1.5	.30	0			
21	0		0	1.2	2.1	4.8	1.4	.30	0			
22	0		0	.62	1.8	6.4	1.5	.30	0			
23	0		0	0	1.5	5.0	1.4	.30	0			
24	0		0	0	1.4	3.7	1.4	.30	0			
25	0		0	0	1.2	3.4	1.3	.25	0			
26	0		0	0	1.1	3.2	1.1	.25	0			
27	0		.23	0	.95	3.2	1.0	.25	0			
28	.37		11	0	.85	2.7	1.0	.25	0			
29	.09		4.0	0	---	2.6	.89	.25	0			
30	0		.90	0	---	2.5	.89	.20	0			
31	0	---	.52	0	---	2.6	---	.19	---			---
TOTAL	.47	0	180.34	3.92	296.30	329.26	63.08	17.21	1.86	0	0	0
MEAN	.015	0	5.82	.13	10.6	10.6	2.10	.56	.062	0	0	0
MAX	.37	0	118	1.2	66	113	5.8	2.9	.23	0	0	0
MIN	0	0	0	0	.85	.67	.89	.19	0	0	0	0
AC-FT	.9	0	358	7.8	588	653	125	34	3.7	0	0	0

CAL YR 1974 TOTAL 1000.67 MEAN 2.74 MAX 372 MIN 0 AC-FT 1980
WTR YR 1975 TOTAL 892.44 MEAN 2.45 MAX 118 MIN 0 AC-FT 1770

Peak discharge (base, 125 ft^3/s)

Date	Time	G.H.	Discharge	Date	Time	G.H.	Discharge
12-4	0200	3.49	569	3-8	0415	2.87	340
2-9	1030	2.18	155				

NOTE.--No gage-height record Dec. 4-6, May 10 to June 2, June 6 to Aug. 4.

11119530 FRANKLIN CREEK AT CARPINTERIA, CALIF.

LOCATION.--Lat 34°24'15", long 119°31'05", in Pueblo Lands of Santa Barbara, Santa Barbara County, on right bank 300 ft (91 m) downstream from Malibu Drive bridge, 0.5 mi (0.8 km) north of Carpinteria.

DRAINAGE AREA.--1.81 mi^2 (4.69 km^2).

PERIOD OF RECORD.--October 1970 to current year.

GAGE.--Water-stage recorder and concrete channel. Altitude of gage is 30 ft (9 m), from topographic map.

AVERAGE DISCHARGE.--5 years, 0.74 ft^3/s (0.0210 m^3/s), 536 acre-ft/yr (661,000 m^3/yr).

EXTREMES.--Current year: Maximum discharge, 200 ft^3/s (5.66 m^3/s), estimated because of tidal effect for peak period, Dec. 4 (gage height, 4.75 ft or 1.448 m), from rating curve extended above 6 ft^3/s (0.17 m^3/s) on basis of computation of flow in concrete channel; minimum daily, 0.08 ft^3/s (0.002 m^3/s) Jan. 31, Aug. 10, 12-16.

Period of record: Maximum discharge, 1,600 ft^3/s (45.3 m^3/s) Dec. 27, 1971 (gage height, 6.1 ft or 1.86 m, from floodmark), from rating curve extended above 25 ft^3/s (0.71 m^3/s) on basis of computation of flow in concrete channel; minimum daily, 0.01 ft^3/s (<0.001 m^3/s) Oct. 1 to Nov. 24, 1970.

REMARKS.--Records poor. No regulation or diversion above station.

DISCHARGE, IN CUBIC FEET PER SECOND, WATER YEAR OCTOBER 1974 TO SEPTEMBER 1975
MEAN VALUES

DAY	OCT	NOV	DEC	JAN	FEB	MAR	APR	MAY	JUN	JUL	AUG	SEP
1	.26	.23	.19	.57	.39	.10	.35	.34	.34	.24	.40	.22
2	.26	.20	.19	.50	6.9	.10	.35	.34	.37	.24	.30	.19
3	.26	.14	15	.45	1.9	.10	.35	.34	.50	.36	.24	.19
4	.22	.15	28	.45	.75	.12	.35	.34	.40	.82	.26	.19
5	.26	.14	1.0	.40	.65	2.9	.50	.38	.40	.44	.20	.17
6	.26	.14	.30	.40	.53	.76	.60	.34	.40	.25	.19	.16
7	.22	.14	.30	.35	.50	3.6	.35	.34	.40	.26	.11	.15
8	.19	.15	.22	.35	1.4	15	.30	.34	.40	.23	.10	.18
9	.16	.14	.22	.35	8.2	1.8	.25	.30	.40	.23	.09	.23
10	.19	.14	.22	.30	1.1	2.1	.22	.34	.40	.22	.08	.19
11	.19	.14	.19	.25	.30	1.0	.22	.30	.30	.24	.10	.17
12	.19	.14	.19	.25	.22	.86	.22	.30	.30	.24	.08	.16
13	.16	.14	.19	.25	.19	4.6	.22	.26	.30	.24	.08	.24
14	.14	.14	.19	.25	.16	1.9	.22	.26	.30	.25	.08	.25
15	.13	.14	.19	.25	.16	1.6	.22	.30	.30	.25	.08	.27
16	.12	.14	.19	.15	.14	1.7	.22	.26	.30	.27	.08	.13
17	.11	.14	.19	.15	.14	1.5	.22	.26	.30	.25	.10	.15
18	.10	.15	.19	.15	.12	1.3	.22	.30	.25	.23	.12	.12
19	.11	.15	.19	.15	.12	1.1	.22	.34	.25	.25	.12	.13
20	.10	.15	.19	.15	.12	.90	.22	.39	.25	.26	.12	.15
21	.12	.15	.16	.15	.12	.80	.23	.23	.25	.26	.14	.14
22	.12	.15	.16	.15	.10	.70	.23	.25	.25	.26	.12	.16
23	.12	.18	.19	.15	.10	.60	.23	.22	.25	.26	.14	.15
24	.12	.18	.19	.15	.10	.50	.24	.26	.21	.26	.16	.17
25	.13	.18	.19	.14	.10	.50	.24	.26	.21	.26	.16	.20
26	.13	.20	.16	.13	.10	.50	.25	.22	.21	.29	.19	.12
27	.15	.20	.80	.13	.10	.45	.27	.23	.21	.38	.22	.11
28	.86	.23	11	.13	.10	.40	.28	.28	.21	.31	.22	.11
29	.29	.21	1.1	.13	---	.40	.28	.27	.21	.26	.19	.11
30	.21	.19	.69	.10	---	.35	.30	.32	.21	.35	.19	.11
31	.25	---	.62	.08	---	.35	---	.32	---	.50	.19	---
TOTAL	6.13	4.87	62.80	7.56	24.81	48.59	8.37	9.23	9.08	9.16	4.85	5.02
MEAN	.20	.16	2.03	.24	.89	1.57	.28	.30	.30	.30	.16	.17
MAX	.86	.23	28	.57	8.2	15	.60	.39	.50	.82	.40	.27
MIN	.10	.14	.16	.08	.10	.10	.22	.22	.21	.22	.08	.11
AC-FT	12	9.7	125	15	49	96	17	18	18	18	9.6	10.0

CAL YR 1974 TOTAL 279.33 MEAN .77 MAX 70 MIN .10 AC-FT 554
WTR YR 1975 TOTAL 200.47 MEAN .55 MAX 28 MIN .08 AC-FT 398

Peak discharge (base, 50 ft^3/s, revised)

Date	Time	G.H.	Discharge	Date	Time	G.H.	Discharge
12-4	0100	4.75	200	3-8	0300	2.58	103
3-5	2000	2.51	57	3-13	2000	2.44	78

11119750 MISSION CREEK NEAR MISSION STREET, AT SANTA BARBARA, CALIF.

LOCATION.--Lat 34°25'35", long 119°43'20", in Pueblo Lands of Santa Barbara, Santa Barbara County, on left bank just south of end of Los Olivos Street in Santa Barbara.

DRAINAGE AREA.--8.38 mi^2 (21.70 km^2).

PERIOD OF RECORD.--October 1970 to current year.

GAGE.--Water-stage recorder. Concrete-lined channel. Altitude of gage is 105 ft (32 m), from topographic map.

AVERAGE DISCHARGE.--5 years, 2.57 ft^3/s (0.0728 m^3/s), 1,830 acre-ft/yr (2.26 hm^3/yr).

EXTREMES.--Current year: Maximum discharge, 1,130 ft^3/s (32.0 m^3/s) Dec. 3 (gage height, 3.45 ft or 1.052 m), from rating curve extended as explained below; no flow for many months.
Period of record: Maximum discharge, 2,580 ft^3/s (73.1 m^3/s) Jan. 18, 1973 (gage height, 4.97 ft or 1.515 m), from rating curve extended above 41 ft^3/s (1.16 m^3/s) on basis of computation of flow in concrete-lined channel; no flow most of each year.

REMARKS.--Records poor. No regulation or diversion above station.

DISCHARGE, IN CUBIC FEET PER SECOND, WATER YEAR OCTOBER 1974 TO SEPTEMBER 1975
MEAN VALUES

DAY	OCT	NOV	DEC	JAN	FEB	MAR	APR	MAY	JUN	JUL	AUG	SEP
1	0		0	.35	3.4	.05	.70	.06		0		
2	0		0	.35	83	0	.64	.04		0		
3	0		98	.27	22	.14	.60	.03		0		
4	0		123	.07	14	.07	.58	.03		0		
5	0		3.4	.02	6.5	5.6	13	.02		0		
6	0		.99	0	2.7	29	12	.02		0		
7	0		.57	0	1.4	110	1.6	.02		0		
8	0		.08	0	2.3	105	1.1	.01		0		
9	0		.01	0	101	32	.86	.01		.02		
10	0		0	0	21	27	.72	.01		0		
11	0		0	0	16	23	.60	0		0		
12	0		0	0	7.2	21	.52	0		0		
13	0		0	0	4.2	21	.47	0		0		
14	0		0	0	4.9	23	.52	0		0		
15	0		0	0	2.1	10	.42	0		0		
16	0		0	0	1.5	9.0	.34	0		0		
17	0		0	0	1.2	7.0	.29	0		0		
18	0		0	0	.91	5.4	.25	0		0		
19	0		0	0	.96	3.9	.22	0		0		
20	0		0	0	.70	3.0	.19	0		0		
21	0		0	0	.48	2.3	.17	0		0		
22	0		0	0	.43	7.2	.15	0		0		
23	0		0	0	.34	3.7	.14	0		0		
24	0		0	0	.27	2.2	.13	0		0		
25	0		0	0	.19	1.5	.16	0		0		
26	0		0	0	.16	1.7	.19	0		0		
27	0		16	0	.07	1.4	.17	0		0		
28	1.8		21	0	.14	1.2	.14	0		0		
29	.88		4.2	0	---	1.0	.12	0		0		
30	0		1.1	.09	---	.90	.08	0		0		
31	0	---	.58	.48	---	.80	---	0	---	0		---
TOTAL	2.68	0	268.93	1.63	299.05	459.06	37.07	.25	0	.02	0	0
MEAN	.087	0	8.68	.053	10.7	14.8	1.24	.008	0	.0006	0	0
MAX	1.8	0	123	.48	101	110	13	.06	0	.02	0	0
MIN	0	0	0	0	.07	0	.08	0	0	0	0	0
AC-FT	5.3	0	533	3.2	593	911	74	.5	0	.04	0	0

CAL YR 1974 TOTAL 759.67 MEAN 2.08 MAX 244 MIN 0 AC-FT 1510
WTR YR 1975 TOTAL 1068.69 MEAN 2.93 MAX 123 MIN 0 AC-FT 2120

Peak discharge (base, 400 ft^3/s).--Dec. 3 (2330) 1,130 ft^3/s (3.45 ft).

NOTE.--No gage-height record Mar. 14 to June 2, Sept. 2-30.

11119760 VICTORIA STREET DRAIN AT OUTLET, AT SANTA BARBARA, CALIF.

LOCATION.--Lat 34°25'09", long 119°42'36", in Pueblo Lands of Santa Barbara, Santa Barbara County, on right downstream end of culvert at west end of Victoria Street in Santa Barbara.

DRAINAGE AREA.--0.625 mi^2 (1.619 km^2).

PERIOD OF RECORD.--October 1970 to current year. Prior to October 1972, published as "near Santa Barbara."

GAGE.--Water-stage recorder and culvert control. Datum of gage is 58.69 ft (17.889 m) above mean sea level (Santa Barbara County Flood Control and Water Conservation District bench mark).

EXTREMES.--Current year: Maximum discharge, 130 ft^3/s (3.68 m^3/s) Dec. 3 (gage height, 3.70 ft or 1.128 m); no flow most of year.
Period of record: Maximum discharge, 155 ft^3/s (4.39 m^3/s) Feb. 27, 1973 (gage height, 4.01 ft or 1.222 m); no flow most of each year.
Flood of Jan. 25, 1969, reached a stage of 4.26 ft (1.298 m), from floodmark (discharge, 178 ft^3/s or 5.04 m^3/s).

REMARKS.--Records fair. Flow is from street drainage. During periods of heavy rainfall flood gates on the upper end of this watershed could be closed which would reduce the drainage area by 140 acres (567,000 m^2).

DISCHARGE, IN CUBIC FEET PER SECOND, WATER YEAR OCTOBER 1974 TO SEPTEMBER 1975
MEAN VALUES

DAY	OCT	NOV	DEC	JAN	FEB	MAR	APR	MAY	JUN	JUL	AUG	SEP
1	.08	0	0	0	1.6	0	0			0	0	0
2	0	0	0	0	12	0	0			0	0	0
3	0	0	14	0	3.0	.15	0			.25	0	0
4	0	0	8.2	0	1.8	.37	0			.13	0	0
5	0	0	0	0	.35	2.6	1.3			0	0	0
6	0	0	0	0	0	3.9	1.8			0	0	0
7	.10	0	0	0	0	4.5	0			0	0	0
8	0	0	0	0	1.5	3.1	0			0	0	0
9	0	0	0	0	10	.66	0			0	0	0
10	0	0	0	0	2.3	1.4	0			0	0	0
11	0	0	0	0	.47	.11	0			0	0	0
12	0	0	0	0	.01	0	0			0	0	0
13	0	0	0	0	0	1.1	0			0	0	0
14	0	0	0	0	0	.25	.04			0	0	0
15	0	0	0	0	0	.03	0			1.1	0	0
16	0	0	0	0	0	.29	0			1.1	.83	0
17	0	0	0	0	0	.13	0			4.2	.07	0
18	0	0	0	0	.07	0	0			0	0	0
19	0	0	0	0	.10	0	0			0	0	0
20	0	0	0	0	.14	.34	0			0	0	0
21	0	.17	0	0	.01	.20	0			.06	0	0
22	0	0	0	0	.06	1.0	0			0	0	0
23	0	0	0	0	.05	0	0			0	0	0
24	0	0	0	0	0	0	0			0	0	.03
25	0	0	0	0	0	.11	0			0	0	0
26	0	0	0	0	0	0	0			0	0	0
27	0	0	2.8	0	0	0	0			0	0	0
28	1.4	0	6.9	0	0	0	0			0	0	0
29	.27	0	.30	0	---	0	0			0	0	0
30	0	0	0	.78	---	0	0			0	0	0
31	0	---	0	.65	---	0	---		---	0	0	---
TOTAL	1.85	.17	32.20	1.43	33.46	20.24	3.14	0	0	6.84	.90	.03
MEAN	.060	.006	1.04	.046	1.20	.65	.10	0	0	.22	.029	.001
MAX	1.4	.17	14	.78	12	4.5	1.8	0	0	4.2	.83	.03
MIN	0	0	0	0	0	0	0	0	0	0	0	0
AC-FT	3.7	.3	64	2.8	66	40	6.2	0	0	14	1.8	.06

CAL YR 1974 TOTAL 97.94 MEAN .27 MAX 17 MIN 0 AC-FT 194
WTR YR 1975 TOTAL 100.26 MEAN .27 MAX 14 MIN 0 AC-FT 199

11119780 ARROYO BURRO CREEK AT SANTA BARBARA, CALIF.

LOCATION.--Lat 34°26'13", long 119°44'44", in Pueblo Lands of Santa Barbara, Santa Barbara County, on right bank 0.4 mi (0.6 km) south of State Street on Hope Avenue in Santa Barbara.

DRAINAGE AREA.--6.65 mi^2 (17.22 km^2).

PERIOD OF RECORD.--October 1970 to current year.

GAGE.--Water-stage recorder. Concrete-lined channel with a low-water control. Altitude of gage is 160 ft (49 m), from topographic map.

AVERAGE DISCHARGE.--5 years, 2.25 ft^3/s (0.0637 m^3/s), 1,630 acre-ft/yr (2.01 hm^3/yr).

EXTREMES.--Current year: Maximum discharge, 1,500 ft^3/s (42.5 m^3/s) Dec. 3 (gage height, 5.11 ft or 1.558 m); no flow many days.
Period of record: Maximum discharge, 1,510 ft^3/s (42.8 m^3/s) Jan. 18, 1973 (gage height, 5.01 ft or 1.527 m); maximum gage height, 5.11 ft (1.558 m) Dec. 3, 1974; no flow many days in each year.

REMARKS.--Records fair below 50 ft^3/s (1.42 m^3/s) and poor above. Period of no gage-height record poor. Small amount of inflow occurs at times from large shopping center that empties water directly into the stream. Partial regulation by Lauro Canyon Reservoir on San Roque Creek.

DISCHARGE, IN CUBIC FEET PER SECOND, WATER YEAR OCTOBER 1974 TO SEPTEMBER 1975
MEAN VALUES

DAY	OCT	NOV	DEC	JAN	FEB	MAR	APR	MAY	JUN	JUL	AUG	SEP
1	.03	.02	.08	0	4.4	.10	0	0	0	.01	.01	.05
2	0	.01	.10	0	190	.09	0	.08	.01	0	.01	.04
3	0	0	226	0	31	.06	0	.07	.01	0	.01	.01
4	0	0	179	0	7.8	.06	0	.02	0	0	.02	.22
5	0	.02	2.0	0	2.4	13	6.6	.05	0	.06	.04	.02
6	0	.02	.34	0	1.3	41	1.0	.01	0	.01	0	.01
7	.01	.03	.02	0	.90	158	.10	0	0	.01	0	.01
8	0	.08	.01	0	13	115	0	0	0	.01	0	.03
9	0	.08	.02	0	132	15	0	.01	0	.01	0	.09
10	0	.05	.03	0	23	18	0	.01	0	.06	0	1.2
11	0	.08	.02	0	5.3	7.8	0	.02	.01	.08	0	.08
12	0	.08	.03	0	2.4	5.6	0	0	0	.09	0	0
13	0	.08	.03	0	1.6	10	0	0	0	.10	0	.07
14	0	.08	.03	.04	1.1	4.8	0	.01	0	.08	0	.02
15	0	.08	.02	0	.80	3.6	0	0	0	.01	0	.04
16	0	.08	.03	0	.72	4.1	0	.01	.01	.02	0	.01
17	0	.08	.04	0	.68	2.8	0	.01	.01	.01	0	.08
18	0	.08	.07	0	.61	2.1	0	.01	.02	.01	0	.02
19	.01	.08	.01	0	.51	1.8	0	0	.13	.02	0	.20
20	0	.08	.01	0	.42	1.5	0	0	.01	0	.02	.15
21	0	.08	.01	0	.42	1.5	0	.02	.01	.01	.04	.26
22	.01	.08	.02	0	.40	4.9	0	.05	0	0	0	.17
23	0	.08	.04	0	.39	1.5	0	.07	0	0	0	.16
24	0	.08	.03	0	.37	1.0	0	.66	0	.03	.02	.09
25	.01	.08	.02	0	.27	.60	0	.01	.01	.02	.06	.15
26	0	.08	.04	0	.24	.45	0	0	.02	.09	.04	.24
27	0	.08	15	0	.14	.35	0	0	.03	.02	0	1.3
28	4.7	.08	75	.02	.11	.25	0	.01	.01	0	.03	1.4
29	.73	.08	1.4	.02	---	.15	0	0	.01	0	0	1.1
30	.01	.08	.32	.10	---	.10	0	0	.01	0	.04	.02
31	.02	---	.10	1.4	---	0	---	0	---	0	.10	---
TOTAL	5.53	1.91	499.87	1.58	422.28	415.21	7.70	1.13	.31	.76	.44	7.24
MEAN	.18	.06	16.1	.05	15.1	13.4	.26	.03	.01	.02	.01	.24
MAX	4.7	.08	226	1.4	190	158	6.6	.66	.13	.10	.10	1.4
MIN	0	0	.01	0	.11	0	0	0	0	0	0	0
AC-FT	11	3.8	991	3.1	838	824	15	2.2	.6	1.5	.9	14

CAL YR 1974 TOTAL 835.85 MEAN 2.29 MAX 226 MIN 0 AC-FT 1660
WTR YR 1975 TOTAL 1363.96 MEAN 3.74 MAX 226 MIN 0 AC-FT 2710

Peak discharge (base, 300 ft^3/s)

Date	Time	G.H.	Discharge	Date	Time	G.H.	Discharge
12-3	2230	5.11	1,500	2-9	0600	3.89	725
12-28	0145	3.44	503	3-7	2115	3.79	614
2-2	1415	4.06	817				

NOTE.--No gage-height record Mar. 24 to May 1.

11119940 MARIA YGNACIO CREEK AT UNIVERSITY DRIVE, NEAR GOLETA, CALIF.

LOCATION.--Lat 34°26'42", long 119°48'10", in Goleta Grant, Santa Barbara County, on right bank at University Drive, 0.2 mi (0.3 km) east of Patterson Avenue, and 1.5 mi (2.4 km) northeast of Goleta.

DRAINAGE AREA.--6.35 mi^2 (16.4 km^2).

PERIOD OF RECORD.--October 1970 to current year.

GAGE.--Water-stage recorder and concrete control. Altitude of gage is 60 ft (18 m), from topographic map.

AVERAGE DISCHARGE.--5 years, 1.34 ft^3/s (0.0379 m^3/s), 971 acre-ft/yr (1.20 hm^3/yr).

EXTREMES.--Current year: Maximum discharge, 867 ft^3/s (24.6 m^3/s) Dec. 3 (gage height, 3.61 ft or 1.100 m), from rating curve extended as explained below; no flow many days.
Period of record: Maximum discharge, 1,470 ft^3/s (41.6 m^3/s) Jan. 18, 1973 (gage height, 4.06 ft or 1.237 m), from rating curve extended above 260 ft^3/s (7.36 m^3/s) on basis of computation of flow in trapezoidal section; no flow most of each year.

REMARKS.--Records good except those for period of no gage-height record, which are fair. No regulation. Some pumping for irrigation.

DISCHARGE, IN CUBIC FEET PER SECOND, WATER YEAR OCTOBER 1974 TO SEPTEMBER 1975
MEAN VALUES

DAY	OCT	NOV	DEC	JAN	FEB	MAR	APR	MAY	JUN	JUL	AUG	SEP
1	0		0	.07	.91	.19	.30	.17	.11	0	0	
2	0		0	.03	49	.12	.28	.16	.18	0	0	
3	0		46	0	13	.09	.26	.15	.21	0	0	
4	0		74	0	4.2	.09	.25	.13	.29	0	0	
5	0		.91	0	2.2	3.3	5.0	.10	.27	0	0	
6	0		.36	0	1.0	36	3.5	0	.28	0	0	
7	0		.15	0	.70	105	2.0	0	.08	0	0	
8	0		.03	0	2.2	76	1.3	0	.08	0	0	
9	0		.01	0	58	10	.90	0	.07	0	0	
10	0		0	0	12	17	.70	0	.08	0	0	
11	0		0	0	5.0	9.2	.60	0	.08	0	0	
12	0		0	0	2.5	4.6	.55	0	.06	0	0	
13	0		0	0	1.5	5.7	.50	0	.08	0	0	
14	0		0	0	1.2	5.1	.45	0	.07	0	0	
15	0		0	0	.85	2.9	.40	0	.05	0	0	
16	0		0	0	.73	2.5	.38	0	.05	0	0	
17	0		0	0	.64	2.0	.35	0	.07	0	0	
18	0		0	.01	.61	1.7	.32	0	.06	.02	0	
19	0		0	0	.53	1.7	.30	0	.15	0	.09	
20	0		0	.12	.62	1.5	.29	.01	.15	0	0	
21	0		0	.41	.53	1.2	.27	.13	0	0	0	
22	0		0	0	.51	2.4	.25	.22	0	0	0	
23	0		0	0	.56	1.5	.24	.21	0	0	0	
24	0		0	0	.49	1.0	.23	.18	0	0	0	
25	0		0	0	.35	.80	.21	.11	0	0	0	
26	0		0	0	.29	.60	.20	.11	0	0	0	
27	0		1.4	0	.29	.45	.20	.15	.03	0	0	
28	.23		23	0	.24	.40	.19	.15	.01	0	0	
29	.05		1.1	0	---	.37	.18	.10	0	0	0	
30	0		.22	.05	---	.35	.17	.09	0	0	0	
31	0	---	.13	.14	---	.32	---	.10	---	0	0	---
TOTAL	.28	0	147.31	.83	160.65	294.08	20.77	2.27	2.51	.02	.09	0
MEAN	.009	0	4.75	.02	5.74	9.49	.69	.07	.08	.0006	.003	0
MAX	.23	0	74	.41	58	105	5.0	.22	.29	.02	.09	0
MIN	0	0	0	0	.24	.09	.17	0	0	0	0	0
AC-FT	.6	0	292	1.6	319	583	41	4.5	5.0	.04	.2	0

CAL YR 1974 TOTAL 394.59 MEAN 1.08 MAX 120 MIN 0 AC-FT 783
WTR YR 1975 TOTAL 628.81 MEAN 1.72 MAX 105 MIN 0 AC-FT 1250

Peak discharge (base, 75 ft^3/s)

Date	Time	G.H.	Discharge	Date	Time	G.H.	Discharge
12-3	2345	3.61	867	2-9	0730	2.43	225
12-28	1445	2.01	93	3-7	1915	2.90	434
2-2	1500	2.56	274				

NOTE.--No gage-height record Mar. 21 to May 6.

11120000 ATASCADERO CREEK NEAR GOLETA, CALIF.

LOCATION.--Lat 34°25'30", long 119°48'35", in La Goleta Grant, Santa Barbara County, on downstream side of center pier of county road bridge 100 ft (30 m) downstream from Maria Ygnacio Creek, 1.3 mi (2.1 km) upstream from mouth, and 1.3 mi (2.1 km) southeast of Goleta.

DRAINAGE AREA.--18.9 mi^2 (49.0 km^2).

PERIOD OF RECORD.--October 1941 to current year. Prior to October 1947, published as Alascadero Creek near Goleta.

GAGE.--Water-stage recorder. Datum of gage is 12.59 ft (3.837 m) above mean sea level (Santa Barbara County bench mark). Prior to Dec. 14, 1967, at site 275 ft (84 m) downstream at same datum.

AVERAGE DISCHARGE.--34 years, 4.42 ft^3/s (0.125 m^3/s), 3,200 acre-ft/yr (3.95 hm^3/yr).

EXTREMES.--Current year: Maximum discharge, 2,380 ft^3/s (67.4 m^3/s) Dec. 3 (gage height, 13.3 ft or 4.05 m, from floodmark), from rating curve extended above 214 ft^3/s (6.06 m^3/s) on basis of slope-area measurement of maximum flow; no flow on several days.
Period of record: Maximum discharge, 5,380 ft^3/s (152 m^3/s) Jan. 18, 1973 (gage height, 13.1 ft or 3.99 m), from rating curve extended above 2,300 ft^3/s (65.1 m^3/s); maximum gage height, 13.3 ft (4.05 m) from floodmark, Dec. 3, 1974; no flow some days in each year.

REMARKS.--Records fair. No regulation above station. Small diversions for irrigation above station. At times low flow results from return irrigation waste water. At other times Lake Cachuma water is wasted to channel.

DISCHARGE, IN CUBIC FEET PER SECOND, WATER YEAR OCTOBER 1974 TO SEPTEMBER 1975
MEAN VALUES

DAY	OCT	NOV	DEC	JAN	FEB	MAR	APR	MAY	JUN	JUL	AUG	SEP
1	.01	.60	.07	.42	.74	.35	1.4	.10	.36	.09	.05	.06
2	.10	.45	.05	.26	364	.15	1.2	.10	1.2	.10	.03	.04
3	0	.35	298	.19	96	.17	1.2	.10	.79	.08	.04	.05
4	.04	.30	333	.37	20	.18	1.1	.08	.46	.04	.03	.14
5	0	.25	2.2	.27	15	15	14	.22	.38	.02	.02	.04
6	0	.20	.69	.52	10	158	8.1	.58	.29	.02	.16	.04
7	0	.17	.40	.34	8.0	390	2.2	1.8	.32	.02	.06	.02
8	.38	.14	.32	.17	6.0	346	1.5	1.4	.29	.02	.52	.01
9	.11	.12	.35	.14	314	58	1.2	.09	.27	.01	.68	.02
10	.19	.11	.20	.02	100	56	.99	.10	.25	.01	.48	.02
11	.01	.10	.21	.04	40	25	1.1	.15	.32	.01	6.2	.01
12	0	.09	.30	.53	15	14	1.2	.10	.26	.01	.58	.03
13	0	.08	.19	.23	9.0	26	.58	.13	.24	.02	.53	.03
14	0	.07	.19	.14	5.0	28	.58	.10	.22	.02	.26	.04
15	.01	.06	.14	.06	3.0	20	.58	.11	.18	.01	.20	.02
16	0	.06	.24	.09	2.5	18	.52	.14	.17	.02	.29	.01
17	.05	.05	.36	.20	1.5	11	.38	.12	.15	.03	.19	.01
18	.01	.05	.30	.23	1.2	11	.38	.25	.12	.09	.18	.01
19	.06	.05	.20	.09	1.0	9.9	.34	.22	.13	.07	.28	0
20	0	.04	.17	.20	.80	11	.34	.21	.16	.05	.13	0
21	0	.04	.14	.37	.65	8.7	.76	.16	.08	.05	.11	.01
22	.23	.04	.13	.11	.50	11	.77	.19	.07	.06	.11	0
23	.05	.04	.06	.29	.45	3.1	.26	.22	.08	.03	.11	0
24	.02	.03	.05	.46	.40	2.6	.21	.20	.10	.02	.19	.01
25	.24	.03	.12	.31	.60	2.3	.26	.24	.05	.02	.11	.05
26	.07	.03	.07	.21	.31	2.1	.14	.27	.05	.04	.08	.01
27	0	.14	20	.28	.64	2.0	.10	.32	.04	.03	.10	.03
28	6.1	.10	179	2.1	.19	1.8	.11	.40	.05	.05	.08	.02
29	5.1	.03	7.0	1.7	---	1.6	.08	.35	.05	.03	.06	0
30	1.5	.02	1.1	.45	---	1.6	.09	.28	.03	.07	.09	.03
31	.90	---	.66	.45	---	1.5	---	.37	---	.06	.09	---
TOTAL	15.18	3.84	845.91	11.24	1016.48	1236.05	41.67	9.10	7.16	1.20	12.04	.76
MEAN	.49	.13	27.3	.36	36.3	39.9	1.39	.29	.24	.03	.39	.02
MAX	6.1	.60	333	2.1	364	390	14	1.8	1.2	.10	6.2	.14
MIN	0	.02	.05	.02	.19	.15	.08	.08	.03	.01	.02	0
AC-FT	30	7.6	1680	22	2020	2450	83	18	14	2.4	24	1.5

CAL YR 1974 TOTAL 2238.82 MEAN 6.13 MAX 546 MIN 0 AC-FT 4440
WTR YR 1975 TOTAL 3200.63 MEAN 8.77 MAX 390 MIN 0 AC-FT 6350

Peak discharge (base, 100 ft^3/s)

Date	Time	G.H.	Discharge	Date	Time	G.H.	Discharge
12-3	2400	13.3	2,380	2-9	0645	8.57	1,220
12-28	1500	6.50	580	3-7	1915	8.96	1,330
2-2	1500	9.40	1,360				

11120500 SAN JOSE CREEK NEAR GOLETA, CALIF.

LOCATION.--Lat 34°27'33", long 119°48'29", in La Goleta Grant, Santa Barbara County, on right bank at Patterson Avenue bridge, 1.1 mi (1.8 km) downstream from unnamed tributary, and 1.7 mi (2.7 km) northeast of Goleta.

DRAINAGE AREA.--5.51 mi^2 (14.27 km^2).

PERIOD OF RECORD.--January 1941 to current year.

GAGE.--Water-stage recorder and concrete low-water control. Datum of gage is 95.61 ft (29.142 m) above mean sea level (Santa Barbara County Road Department bench mark). Prior to Dec. 24, 1955, at datum 5.50 ft (1.676 m) higher. Dec. 24, 1955, to Jan. 10, 1960, at datum 1.5 ft (0.46 m) higher. Prior to Oct. 1, 1971, at site 75 ft (23 m) downstream at same datum.

AVERAGE DISCHARGE.--34 years, 1.87 ft^3/s (0.0530 m^3/s), 1,350 acre-ft/yr (1.66 hm^3/yr).

EXTREMES.--Current year: Maximum discharge, 902 ft^3/s (25.5 m^3/s) Dec. 3 (gage height, 7.90 ft or 2.408 m), from rating curve extended above 23 ft^3/s (0.65 m^3/s) on basis of maximum discharge at old gage site 75 ft (23 m) downstream; no flow many days.

Period of record: Maximum discharge, 2,000 ft^3/s (56.6 m^3/s) Jan. 25, 1969 (gage height, 10.10 ft or 3.078 m), from rating curve extended above 400 ft^3/s (11.3 m^3/s) on basis of slope-area measurement at gage height 9.32 ft (2.841 m); maximum gage height, 12.74 ft (3.883 m), present datum, Jan. 21, 1943; no flow at times in each year.

REMARKS.--Records fair. No regulation above station. Many small diversions for irrigation above station.

DISCHARGE, IN CUBIC FEET PER SECOND, WATER YEAR OCTOBER 1974 TO SEPTEMBER 1975
MEAN VALUES

DAY	OCT	NOV	DEC	JAN	FEB	MAR	APR	MAY	JUN	JUL	AUG	SEP
1	.16	.45	.03	.81	.82	1.2	.63	.82	.33	.22	.11	.04
2	.17	.46	.03	.63	56	1.2	.46	.82	.33	.22	.02	0
3	.13	.46	46	.54	28	1.1	.46	.82	.33	.19	.09	0
4	.17	.46	89	.46	18	.94	.46	.82	.33	.09	.09	0
5	.23	.46	2.2	.40	7.0	1.7	5.4	.82	.33	.13	.09	0
6	.30	.46	1.1	.39	3.6	41	3.6	.82	.33	.20	.06	0
7	.20	.46	.82	.39	2.4	122	2.6	.82	.33	.17	0	.01
8	.13	.39	.54	.39	2.0	103	1.5	.82	.33	.16	.01	.03
9	.09	.39	.54	.39	111	19	1.2	.82	.33	.25	.03	.01
10	.03	.33	.46	.39	72	17	.82	.82	.33	.16	0	0
11	.03	.33	.46	.39	11	9.4	.73	.82	.33	.18	0	.07
12	.02	.33	.46	.39	6.0	5.3	.82	.82	.33	.18	.03	.05
13	.02	.33	.46	.39	4.4	5.0	.82	.73	.39	.18	0	.03
14	.02	.33	.46	.39	3.7	5.7	.82	.63	.39	.18	0	.08
15	.02	.31	.39	.33	3.3	3.1	.82	.63	.39	.18	.06	.06
16	.02	.33	.39	.33	2.7	2.6	.82	.63	.39	.32	.11	.02
17	.03	.33	.33	.33	2.3	1.8	.82	.63	.39	.40	.12	0
18	.03	.32	.33	.33	2.0	1.8	.82	.54	.33	.47	.13	0
19	.03	.22	.33	.33	1.5	1.7	.73	.54	.33	.47	.05	0
20	.03	.16	.33	.33	1.3	1.5	.73	.54	.33	.47	.05	0
21	.03	.13	.33	.33	1.2	1.1	.73	.54	.33	.52	.07	0
22	.03	.10	.33	.33	1.2	2.2	.63	.54	.33	.38	.09	0
23	.03	.07	.33	.33	1.2	1.5	.73	.63	.33	.29	.10	0
24	.03	.05	.33	.28	1.2	1.1	.73	.46	.33	.17	.09	0
25	.03	.04	.33	.27	1.2	1.1	.82	.39	.33	.09	.09	0
26	.17	.03	.33	.27	1.2	1.1	.82	.33	.22	.27	.06	0
27	.21	.03	.46	.27	1.2	.94	.82	.33	.22	.39	.03	0
28	.97	.03	11	.27	1.2	.85	.82	.33	.22	.54	0	0
29	1.0	.03	3.6	.27	---	.78	.82	.33	.22	.33	0	.02
30	.30	.03	1.4	.27	---	.73	.82	.33	.22	.14	0	.03
31	.38	---	1.0	.33	---	.63	---	.33	---	.11	0	---
TOTAL	5.04	7.85	164.10	11.55	348.62	358.07	32.80	19.25	9.65	8.05	1.58	.45
MEAN	.16	.26	5.29	.37	12.5	11.6	1.09	.62	.32	.26	.05	.01
MAX	1.0	.46	89	.81	111	122	5.4	.82	.39	.54	.13	.08
MIN	.02	.03	.03	.27	.82	.63	.46	.33	.22	.09	0	0
AC-FT	10.0	16	325	23	691	710	65	38	19	16	3.1	.9

CAL YR 1974 TOTAL 591.49 MEAN 1.62 MAX 103 MIN .02 AC-FT 1170
WTR YR 1975 TOTAL 967.01 MEAN 2.65 MAX 122 MIN 0 AC-FT 1920

Peak discharge (base, 100 ft^3/s)

Date	Time	G.H.	Discharge	Date	Time	G.H.	Discharge
12-3	2345	7.90	902	2-9	0600	5.07	291
2-2	1500	5.11	295	3-7	about 1800	5.43	about 343

11120510 SAN JOSE CREEK AT GOLETA, CALIF.

LOCATION.--Lat 34°25'49", long 119°49'16", in La Goleta Grant, Santa Barbara County, on right bank south of Hollister Avenue and Kellogg Road, 0.5 mi (0.8 km) southeast of Goleta.

DRAINAGE AREA.--9.42 mi^2 (24.40 km^2).

PERIOD OF RECORD.--October 1970 to current year.

GAGE.--Water-stage recorder. Altitude of gage is 10 ft (3 m), from topographic map.

AVERAGE DISCHARGE.--5 years, 2.55 ft^3/s (0.0722 m^3/s), 1,850 acre-ft/yr (2.28 hm^3/yr).

EXTREMES.--Current year: Maximum discharge, 1,830 ft^3/s (51.8 m^3/s) Dec. 3 (gage height, 4.95 ft or 1.509 m), from rating curve extended as explained below; no flow for many days.
Period of record: Maximum discharge, 1,950 ft^3/s (55.2 m^3/s) Jan. 18, 1973 (gage height, 5.21 ft or 1.588 m), from rating curve extended above 400 ft^3/s (11.3 m^3/s) on basis of slope-conveyance computation of flow in concrete channel at gage height 8.00 ft (2.438 m); no flow for long periods in each year.
REVISIONS.--The maximum discharge for the water year 1973 has been revised to 1,950 ft^3/s (55.2 m^3/s) Jan. 18, 1973 (gage height, 5.21 ft or 1.588 m), superseding figure published in Water Resources Data for California, Part 1, Vol. 1.

REMARKS.--Records good except those for period of no gage-height record, which are poor. No regulation above station. Diversions for irrigation and domestic use above station.

REVISED PEAK DISCHARGE.--1973: Jan. 18 (1445) 1,950 ft^3/s (5.21 ft); Feb. 6 (1930) 181 ft^3/s (2.19 ft); Mar. 8 (no peak above base).

DISCHARGE, IN CUBIC FEET PER SECOND, WATER YEAR OCTOBER 1974 TO SEPTEMBER 1975
MEAN VALUES

DAY	OCT	NOV	DEC	JAN	FEB	MAR	APR	MAY	JUN	JUL	AUG	SEP
1	0	0	0	.70	.48	1.2	1.4	.70	.19	.01	0	.03
2	0	0	0	.64	60	1.2	1.2	.70	.19	0	0	.04
3	0	0	93	.42	18	1.1	1.2	.70	.18	0	0	0
4	0	0	151	.39	11	1.3	1.2	.70	.21	0	0	0
5	0	0	10	.37	6.2	1.7	11	.70	.19	0	0	0
6	0	0	6.2	.26	3.7	35	7.6	.70	.13	0	0	0
7	0	0	2.8	.27	1.8	120	5.2	.70	.22	0	0	0
8	0	0	1.6	.27	3.4	75	3.4	.70	.26	0	0	0
9	0	0	.83	.40	92	16	2.5	.70	.26	0	0	0
10	0	0	.62	.28	32	15	1.2	.70	.14	0	0	0
11	0	0	.62	.18	18	12	.95	.60	.10	0	0	0
12	0	0	.52	.13	12	7.0	.95	.52	.24	0	0	0
13	0	0	.38	.15	4.4	9.0	.83	.47	.30	0	0	0
14	0	0	.52	.10	3.4	8.4	.95	.45	.24	0	0	0
15	0	0	.38	.10	3.0	5.7	1.6	.45	.30	0	0	0
16	0	0	.38	.10	2.0	5.7	.83	.44	.30	0	0	0
17	0	0	.38	.13	1.6	3.4	.83	.40	.24	0	0	0
18	0	0	.38	.08	1.6	2.5	.71	.37	.24	0	0	0
19	0	0	.38	.06	1.6	2.5	.71	.37	.19	0	0	0
20	0	0	.52	.07	1.6	2.2	.71	.37	.19	0	0	0
21	0	.04	.38	.10	1.4	2.2	.71	.37	.19	0	0	0
22	0	0	.24	.03	1.4	6.2	.71	.40	.24	0	0	0
23	0	0	.24	.03	1.4	2.5	.71	.35	.83	0	0	0
24	0	0	.38	.06	1.4	2.0	.71	.30	.19	0	.18	0
25	0	0	.44	.06	1.2	2.0	.71	.27	.07	0	0	0
26	0	.03	.71	.07	1.2	1.9	.71	.25	.05	0	0	0
27	0	0	4.4	.10	1.2	1.8	.71	.23	0	0	0	0
28	.99	0	20	.10	1.2	1.7	.71	.22	.01	0	0	0
29	.27	0	4.4	.11	---	1.6	.71	.21	0	0	0	0
30	0	.04	1.3	1.7	---	1.6	.70	.20	.19	0	0	0
31	0	---	.91	.81	---	1.6	---	.20	---	0	0	---
TOTAL	1.26	.11	303.91	8.27	288.18	351.0	52.26	14.44	6.08	.01	.18	.07
MEAN	.041	.004	9.80	.27	10.3	11.3	1.74	.47	.20	.0003	.006	.002
MAX	.99	.04	151	1.7	92	120	11	.70	.83	.01	.18	.04
MIN	0	0	0	.03	.48	1.1	.70	.20	0	0	0	0
AC-FT	2.5	.2	603	16	572	696	104	29	12	.02	.4	.1

CAL YR 1974 TOTAL 862.67 MEAN 2.36 MAX 170 MIN 0 AC-FT 1710
WTR YR 1975 TOTAL 1025.77 MEAN 2.81 MAX 151 MIN 0 AC-FT 2030

Peak discharge (base, 150 ft^3/s)

Date	Time	G.H.	Discharge	Date	Time	G.H.	Discharge
12 3	2400	4.95	1,830	2-9	0600	2.78	397
2-2	1515	2.96	505	3-7	about 1800	3.06	565

NOTE.--No gage-height record Apr. 29 to June 2.

11120550 GAVIOTA CREEK NEAR GAVIOTA, CALIF.

LOCATION.--Lat 34°29'16", long 120°13'34", in Nuestra Senora Del Refugio Grant, Santa Barbara County, on left bank 1.3 mi (2.1 km) northwest of Gaviota, and 1.6 mi (2.6 km) upstream from mouth.

DRAINAGE AREA.--18.8 mi^2 (48.7 km^2).

PERIOD OF RECORD.--October 1966 to current year.

GAGE.--Water-stage recorder. Altitude of gage is 100 ft (30 m), from topograhic map.

AVERAGE DISCHARGE.--9 years, 5.32 ft^3/s (0.151 m^3/s), 3,850 acre-ft/yr (4.75 hm^3/yr).

EXTREMES. Current year: Maximum discharge, 2,050 ft^3/s (58.1 m^3/s) Dec. 3 (gage height, 6.90 ft or 2.103 m), from rating curve extended as explained below; minimum daily, 0.15 ft^3/s (0.004 m^3/s) Oct. 16-18.
Period of record: Maximum discharge, 4,000 ft^3/s (113 m^3/s) Jan. 24, 1967 (gage height, 8.40 ft or 2.560 m), from rating curve extended above 1,300 ft^3/s (36.8 m^3/s) on basis of slope-area measurement of maximum flow; no flow at times in some years.

REMARKS. Records good below 100 ft^3/s (2.83 m^3/s), fair above. No regulation. Small pumping for domestic and resort use.

DISCHARGE, IN CUBIC FEET PER SECOND, WATER YEAR OCTOBER 1974 TO SEPTEMBER 1975

DAY	OCT	NOV	DEC	JAN	FEB	MAR	APR	MAY	JUN	JUL	AUG	SEP
1	.24	.25	.25	3.6	5.8	4.5	8.8	5.2	2.8	2.0	1.4	.85
2	.23	.23	.30	3.2	198	4.2	8.3	5.0	2.8	2.1	1.4	.96
3	.23	.23	219	2.6	61	4.0	8.3	4.8	2.6	2.1	1.4	.85
4	.24	.24	137	2.5	24	4.2	8.1	4.5	2.6	2.0	1.4	.75
5	.23	.23	3.4	2.4	15	10	12	4.5	2.8	2.0	1.2	.75
6	.23	.22	1.6	2.2	9.8	40	15	4.5	2.8	2.0	1.2	.85
7	.24	.19	1.2	2.1	7.8	571	10	4.5	2.8	1.8	1.2	.85
8	.23	.19	.92	2.0	8.2	185	9.0	4.5	2.8	1.8	1.2	.75
9	.22	.19	.82	1.8	89	50	8.3	4.2	3.1	1.8	1.2	.85
10	.22	.18	.75	1.8	47	81	7.8	4.2	3.1	1.8	1.2	.85
11	.20	.19	.75	1.8	19	53	7.7	3.9	3.4	1.8	1.2	.75
12	.23	.18	.65	1.5	14	33	7.8	3.9	3.1	1.8	1.2	.75
13	.19	.18	.65	1.6	12	33	7.6	3.6	3.4	2.0	1.4	.75
14	.19	.19	.65	1.6	11	31	7.5	3.6	3.1	2.0	1.4	.85
15	.18	.20	.65	1.5	8.7	24	7.5	3.6	3.1	2.0	1.2	.75
16	.15	.24	.65	1.4	8.2	22	7.4	3.6	3.1	1.8	1.4	.65
17	.15	.23	.65	1.4	7.0	19	7.0	3.4	3.1	1.8	1.2	.65
18	.15	.21	.65	1.4	6.6	17	6.6	3.4	3.1	1.8	1.2	.65
19	.16	.20	.65	1.3	6.2	16	6.5	3.6	2.8	1.8	1.1	.65
20	.17	.24	.65	1.2	6.2	15	6.4	3.6	2.8	1.8	1.1	.65
21	.18	.31	.65	1.2	5.4	14	6.4	3.4	3.1	1.8	1.2	.65
22	.18	.29	.65	1.1	5.1	26	6.2	3.4	3.1	1.8	1.2	.65
23	.19	.23	.57	1.1	5.1	14	6.0	3.1	2.8	1.8	1.1	.57
24	.19	.23	.65	1.1	5.0	13	6.0	2.8	2.6	1.8	1.1	.57
25	.19	.20	.75	.98	4.8	13	6.0	2.8	2.4	1.6	.96	.57
26	.19	.23	.75	.96	4.7	11	5.6	2.8	2.4	1.6	.96	.57
27	.20	.23	15	.97	4.6	11	5.4	2.8	2.4	1.6	.96	.65
28	.90	.25	84	.95	4.5	10	5.4	2.8	2.3	1.6	.96	.65
29	.45	.25	13	.95	------	9.6	5.3	2.8	2.3	1.6	.96	.68
30	.25	.25	6.0	.96	------	9.5	5.2	2.8	2.1	1.5	.96	.74
31	.24	------	4.4	.98	------	9.4	------	2.8	------	1.4	.96	------
TOTAL	7.24	6.68	498.26	50.15	603.7	1,357.4	225.1	114.4	84.7	56.1	36.52	21.71
MEAN	.23	.22	16.1	1.62	21.6	43.8	7.50	3.69	2.82	1.81	1.18	.72
MAX	.90	.31	219	3.6	198	571	15	5.2	3.4	2.1	1.4	.96
MIN	.15	.18	.25	.95	4.5	4.0	5.2	2.8	2.1	1.4	.96	.57
AC-FT	14	13	988	99	1,200	2,690	446	227	168	111	72	43

CAL YR 1974 TOTAL 1,745.19 MEAN 4.78 MAX 418 MIN .15 AC-FT 3,460
WTR YR 1975 TOTAL 3,061.96 MEAN 8.39 MAX 571 MIN .15 AC-FT 6,070

Peak discharge (base, 100 ft^3/s)

Date	Time	G.H.	Discharge	Date	Time	G.H.	Discharge
12 3	2315	6.90	2,050	2-9	0500	3.82	195
12 28	0030	4.57	454	3-7	1700	6.80	1,950
2 2	1130	5.32	792	3-10	1645	4.18	314

11120600 JALAMA CREEK NEAR LOMPOC, CALIF.

LOCATION.--Lat 34°30'50", long 120°29'02", in San Julian Grant, Santa Barbara County, on downstream side of right bridge pier on Jalama Road, 0.6 mi (1.0 km) downstream from Gasper Creek, 1.4 mi (2.3 km) upstream from mouth, and 8.9 mi (14.3 km) southwest of Lompoc.

DRAINAGE AREA.--20.5 mi^2 (53.1 km^2).

PERIOD OF RECORD.--September 1965 to current year.

GAGE.--Water-stage recorder and concrete control. Altitude of gage is 80 ft (24 m), from topographic map.

AVERAGE DISCHARGE.--10 years, 3.11 ft^3/s (0.0881 m^3/s), 2,250 acre-ft/yr (2.77 hm^3/yr).

EXTREMES.--Current year: Maximum discharge, 1,900 ft^3/s (53.8 m^3/s) Mar. 7 (gage height, 8.30 ft or 2.530 m); minimum daily, 0.03 ft^3/s (0.001 m^3/s) Nov. 12-15.
Period of record: Maximum discharge, 3,530 ft^3/s (100 m^3/s) Jan. 18, 1973 (gage height, 9.97 ft or 3.039 m), from rating curve extended above 1,700 ft^3/s (48.1 m^3/s) on basis of slope-area measurement at gage height 8.05 ft (2.454 m); no flow many days in most years.

REMARKS.--Records good. No regulation or diversion above station. Pumping from wells for irrigation of about 400 acres (1.62 km^2).

DISCHARGE, IN CUBIC FEET PER SECOND, WATER YEAR OCTOBER 1974 TO SEPTEMBER 1975
MEAN VALUES

DAY	OCT	NOV	DEC	JAN	FEB	MAR	APR	MAY	JUN	JUL	AUG	SEP
1	.05	.10	.07	1.2	1.2	1.7	5.0	1.8	.88	.38	.24	.05
2	.07	.08	.08	.95	35	1.7	4.5	1.8	.88	.29	.21	.05
3	.08	.06	84	.81	25	1.7	4.5	1.6	.83	.27	.19	.07
4	.14	.06	70	.78	15	1.7	4.3	1.5	.88	.39	.16	.07
5	.15	.06	5.0	.74	9.6	4.1	4.7	1.5	.88	.34	.14	.06
6	.18	.05	.90	.70	4.1	7.8	7.5	1.5	.88	.29	.11	.05
7	.13	.05	.61	.73	2.6	324	6.0	1.5	.68	.28	.09	.06
8	.14	.05	.49	.83	2.0	70	4.7	1.5	.68	.28	.07	.07
9	.15	.04	.44	.70	90	30	3.9	1.3	.88	.29	.06	.11
10	.21	.04	.44	.60	35	35	3.5	1.3	.88	.28	.07	.18
11	.18	.04	.41	.56	14	45	3.5	1.2	.78	.27	.08	.21
12	.15	.03	.40	.52	8.1	15	3.3	1.2	.78	.25	.09	.19
13	.15	.03	.35	.57	6.3	14	3.1	1.2	1.2	.30	.11	.18
14	.15	.03	.32	.60	5.2	20	3.2	1.3	.88	.33	.14	.19
15	.13	.03	.26	.60	4.2	12	3.1	1.2	.78	.29	.16	.16
16	.10	.04	.32	.60	3.5	16	3.4	1.2	.52	.29	.17	.14
17	.14	.05	.29	.60	3.0	11	3.9	1.1	.52	.29	.17	.11
18	.14	.06	.29	.60	3.0	9.3	2.9	1.1	.68	.29	.17	.09
19	.15	.05	.29	.60	2.8	8.5	2.7	1.2	.60	.29	.16	.08
20	.17	.07	.29	.61	2.7	7.7	2.7	1.2	.60	.28	.14	.07
21	.21	.13	.31	.63	2.3	6.9	2.6	1.0	.52	.27	.16	.08
22	.24	.12	.30	.52	2.1	35	2.5	1.0	.52	.27	.19	.08
23	.17	.08	.27	.52	2.0	13	2.2	1.0	.44	.28	.19	.07
24	.12	.05	.23	.52	2.1	9.9	2.3	1.0	.60	.27	.16	.06
25	.12	.05	.26	.52	2.0	9.6	2.3	1.1	.44	.26	.12	.05
26	.15	.07	.31	.57	1.9	7.9	2.1	1.1	.31	.24	.11	.04
27	.15	.07	1.5	.52	2.0	7.0	2.0	1.0	.35	.26	.11	.05
28	.26	.07	29	.52	1.7	6.4	2.0	.96	.32	.29	.11	.05
29	.36	.06	7.1	.54	---	5.8	2.0	.93	.33	.29	.09	.09
30	.10	.07	2.2	.58	---	5.5	1.9	.88	.39	.27	.07	.15
31	.08	---	2.3	.60	---	5.3	---	.85	---	.24	.06	---
TOTAL	4.72	1.79	209.03	19.94	288.4	748.5	102.3	38.02	19.91	8.91	4.10	2.91
MEAN	.15	.060	6.74	.64	10.3	24.1	3.41	1.23	.66	.29	.13	.097
MAX	.36	.13	84	1.2	90	324	7.5	1.8	1.2	.39	.24	.21
MIN	.05	.03	.07	.52	1.2	1.7	1.9	.85	.31	.24	.06	.04
AC-FT	9.4	3.6	415	40	572	1480	203	75	39	18	8.1	5.8

CAL YR 1974 TOTAL 899.56 MEAN 2.46 MAX 233 MIN 0 AC-FT 1780
WTR YR 1975 TOTAL 1448.53 MEAN 3.97 MAX 324 MIN .03 AC-FT 2870

Peak discharge (base, 150 ft^3/s)

Date	Time	G.H.	Discharge	Date	Time	G.H.	Discharge
12-3	2215	6.86	930	3-7	1615	8.30	1,900
2-9	0515	4.86	246				

11121000 SANTA YNEZ RIVER AT JAMESON LAKE, NEAR MONTECITO, CALIF.

LOCATION. -Lat 34°29'32", long 119°30'25", in SW¼NE¼NW¼ sec.28, T.5 N., R.25 W., Santa Barbara County, on upstream face of Juncal Dam, 6.5 mi (10.5 km) north of Carpinteria, and 8 mi (13 km) northeast of Montecito.

DRAINAGE AREA.--13.9 mi^2 (36.0 km^2), excludes Alder Creek.

PERIOD OF RECORD.--December 1930 to current year. Prior to October 1938, published as "at Juncal Reservoir, near Montecito."

GAGE. -Water-stage recorder on lake; water-stage recorder and sharp-crested weir on outlet conduit. Datum of gage is 2,021.6 ft (616.18 m) above mean sea level (Bureau of Reclamation bench mark), or 2,000 ft (609.6 m) above arbitrary datum (called sea level) generally used for works in this vicinity.

AVERAGE DISCHARGE.--44 years (1931-75), 6.46 ft^3/s (0.183 m^3/s), 4,680 acre-ft/yr (5.77 hm^3/yr).

REMARKS. -Records of total inflow represent all water reaching Jameson Lake including precipitation on the lake. Total inflow computed on basis of records of storage, diversion (draft) to the city of Montecito, spill and release to river, and evaporation. Records of net inflow exclude precipitation on lake surface. Monthly evaporation from lake surface computed on basis of evaporation from Colorado land pan using coefficient of 0.80. Area table is based on survey made in 1961. Capacity table is based on survey made in 1969. Lake capacity at spillway level (gage height, 223.82 ft or 68.220 m), 6,119 acre-ft (7.54 hm^3). Dead storage, 18 acre-ft (22,200 m^3), below lowest outlet at gage height 139.0 ft (42.37 m) included in these records. There is no regulation or diversion above station. At times flow of Alder Creek, which enters Santa Ynez River 2 mi (3 km) downstream from Juncal Dam, is diverted at elevation, 2,250 ft (686 m) through a tunnel to Jameson Lake and is included in these records.

COOPERATION.--Reservoir-operation records and related data furnished by Montecito County Water District.

MONTHLY NET DISCHARGE, WATER YEAR OCTOBER 1974 TO SEPTEMBER 1975

Date	Gage height (feet)a	Contents (acre-feet)	Change in contents (acre-feet)	Draft (acre-feet)	Spill and release (acre-feet)	Evapo-ration (acre-feet)	Total inflow (acre-feet)	Rain on reser-voir (acre-feet)	Net inflow (acre-feet)
	Jameson Lake								
Sept. 30.....	218.33	5,390	--	--	--	--	--	--	--
Oct 31.....	217.19	5,250	-140	82	0	17	-41	7	-48
Nov. 30.....	216.43	5,150	-100	77	0	10	-13	1	-14
Dec. 31.....	219.53	5,550	+400	47	0	7	454	120	334
CAL YR 1974.....	--	--	+140	1,141	2,050	365	3,696	372	3,324
Jan. 31.....	219.15	5,500	-50	85	0	10	45	4	41
Feb. 28.....	222.86	5,990	+490	53	0	11	554	79	475
Mar. 31.....	224.34	6,190	+200	39	2,220	17	2,476	127	2,349
Apr. 30.....	224.85	6,260	+70	92	38	24	224	32	192
May 31.....	224.28	6,180	-80	223	8	43	194	0	194
June 30.....	222.99	6,000	-180	184	0	49	53	0	53
July 31.....	221.95	5,860	-140	85	0	57	2	0	2
Aug. 31.....	220.76	5,710	-150	77	0	56	-17	0	-17
Sept. 30.....	219.59	5,550	-160	89	0	39	-32	0	-32
WTR YR 1975.....	--	--	+160	1,133	2,266	340	3,899	370	3,529

a Gage height at 1800.

NOTE.--For months when inflow to the lake was small and other quantities were large, discordant figures of net inflow may appear. This arises primarily from the difficulty of computing net inflow as the residual of several larger quantities, which are not susceptible to measurement with a precision necessary to produce a final answer within desirable limits of accuracy.

11122000 SANTA YNEZ RIVER ABOVE GIBRALTAR DAM, NEAR SANTA BARBARA, CALIF.

LOCATION.--Lat 34°31'34", long 119°41'08", in SW¼NW¼SW¼ sec.11, T.5 N., R.27 W., Santa Barbara County, on upstream face of Gibraltar Dam, 7 mi (11 km) north of Santa Barbara.

DRAINAGE AREA.--216 mi^2 (559 km^2).

PERIOD OF RECORD.--April 1920 to current year. November 1903 to November 1918 (fragmentary) at river station at damsite; records not equivalent because records since April 1920 are based on operation of Gibraltar Reservoir, and since December 1930, Jameson Lake. Prior to October 1945, published as "near Santa Barbara."

GAGE. Water-stage recorder on reservoir; water-stage recorder and sharp-crested weir on diversion. Spill and release measured at river gaging station below dam (see sta 11123000). Datum of gage is at mean sea level. See WSP 1735 for history of changes prior to Oct. 1, 1955.

REMARKS.--Records of total inflow represent all water reaching Gibraltar Reservoir, including precipitation on reservoir. Total inflow computed on basis of records of storage diversion (draft) to city of Santa Barbara, spill and release to river, and evaporation. Records of net inflow exclude precipitation on reservoir surface. Monthly evaporation from reservoir surface computed on basis of evaporation from Colorado land pan using coefficient of 0.80. Area and capacity tables are based on survey made in October 1973. Reservoir capacity at spillway level (elevation, 1,399.82 ft or 426.665 m), 9,300 acre-ft (11.5 hm^3). Flashboards were used during current year. Silt level of reservoir at elevation 1,344 ft (410 m). Lowest outlet at elevation 1,333.86 ft (406.561 m). Flow regulated by Jameson Lake since December 1930 (see sta 11121000).

COOPERATION.--Reservoir-operation records and related data furnished by city of Santa Barbara.

MONTHLY NET INFLOW, WATER YEAR OCTOBER 1974 TO SEPTEMBER 1975

Date	Elevation (feet)a	Contents (acre-feet)	Change in contents (acre-feet)	Draft (acre-feet)	Spill and release (acre-feet)	Evaporation (acre-feet)	Total inflow (acre-feet)	Rain on reservoir (acre-feet)	Net inflow (acre-feet)
	Gibraltar Reservoir								
Sept. 30	1,386.01	5,970	--	--	--	--	--	--	--
Oct. 31	1,383.13	5,390	-580	583	0	47	50	15	35
Nov. 30	1,380.54	4,870	-520	487	0	45	12	0	12
Dec. 31	1,385.54	5,870	+1,000	425	9.0	26	1,460	166	1,294
CAL YR 1974	--	--	+270	7,209	18,339	1,027	26,845	575	26,270
Jan. 31	1,385.58	5,880	+10	301	0	33	344	3	341
Feb. 28	1,399.34	9,170	+3,290	175	180	53	3,698	90	3,608
Mar. 31	1,400.11	9,380	+210	381	21,200	54	21,845	165	21,680
Apr. 30	1,400.13	9,390	+10	549	3,810	67	4,436	54	4,382
May 31	1,400.95	9,620	+230	614	403	120	1,367	2	1,365
June 30	1,399.25	9,150	-470	595	189	132	446	0	446
July 31	1,395.60	8,190	-960	676	365	154	235	0	235
Aug. 31	1,392.22	7,360	-830	678	106	143	97	0	97
Sept. 30	1,389.47	6,730	-630	594	0	111	75	0	75
WTR YR 1975	--	--	+760	6,058	26,262	985	34,065	495	33,570

a Elevation at 1800.

NOTE.--For months when inflow to the reservoir was small and other quantities were large, discordant figures of net inflow may appear. This arises primarily from the difficulty of computing net inflow as the residual of several larger quantities, which are not susceptible to measurement with a precision necessary to produce a final answer within desirable limits of accuracy.

11123000 SANTA YNEZ RIVER BELOW GIBRALTAR DAM, NEAR SANTA BARBARA, CALIF.

LOCATION.--Lat 34°31'28", long 119°41'11", in NW¼SW¼SW¼ sec.11, T.5 N., R.27 W., Santa Barbara County, on left bank 700 ft (213 m) downstream from Gibraltar Dam, and 7 mi (11 km) north of Santa Barbara.

DRAINAGE AREA.--216 mi^2 (559 km^2).

PERIOD OF RECORD.--April 1920 to current year (monthly discharge only prior to October 1941).

GAGE.--Water-stage recorder on main channel; water-stage recorder and combination sharp-crested weir on "release to river" gage. Datum of gage is 1,227 ft (374 m) above mean sea level. See WSP 1735 for history of changes prior to May 20, 1958.

EXTREMES.--Current year: Maximum discharge, 5,090 ft^3/s (144 m^3/s) Mar. 7 (gage height, 13.14 ft or 4.005 m); no flow many days.
Period of record: Maximum discharge, 54,200 ft^3/s (1,530 m^3/s) Jan. 25, 1969 (gage height, 25.8 ft or 7.86 m), from rating curve extended above 2,100 ft^3/s (59.5 m^3/s) on basis of computations of flow from gate openings and flow over dam at gage heights 17.5 ft (5.33 m) and 25.8 ft (7.86 m); no flow at times in most years.

REMARKS.--Records fair. Flow regulated by Jameson Lake (see sta 11121000) and Gibraltar Reservoir (see sta 11122000). City of Santa Barbara diverted 6,060 acre-ft (7.47 hm^3) during current year from Gibraltar Reservoir; Montecito County Water District diverted 1,130 acre-ft (1.39 hm^3) during current year from Jameson Lake.

DISCHARGE, IN CUBIC FEET PER SECOND, WATER YEAR OCTOBER 1974 TO SEPTEMBER 1975
MEAN VALUES

DAY	OCT	NOV	DEC	JAN	FEB	MAR	APR	MAY	JUN	JUL	AUG	SEP
1			0		.03	12	36	29	1.1	8.3	4.4	
2			0		5.3	13	35	.15	15	8.3	4.2	
3			.15		1.2	13	41	.10	.26	8.3	4.2	
4			3.2		.22	36	40	.14	.30	7.6	4.2	
5			.02		.11	1.2	111	.26	.06	7.0	4.2	
6			0		.05	1010	149	.49	.04	7.0	4.2	
7			0		.03	2160	116	1.0	.03	7.0	4.2	
8			0		.02	3170	91	1.5	.02	7.0	4.2	
9			0		.40	980	82	2.8	.02	7.0	4.2	
10			0		.27	590	77	5.3	.01	7.0	4.2	
11			0		.11	375	76	8.7	0	6.3	4.2	
12			0		.22	261	69	10	0	5.8	4.2	
13			0		.68	245	68	10	0	5.8	3.0	
14			0		.25	249	70	11	0	5.8	0	
15			0		.66	209	78	10	0	5.8	0	
16			0		1.3	205	79	11	0	5.8	0	
17			0		1.9	101	75	11	0	5.8	0	
18			0		2.8	34	63	11	0	5.4	0	
19			0		3.5	110	59	11	0	5.0	0	
20			0		4.0	106	58	10	3.9	5.0	0	
21			0		4.4	92	54	9.7	7.0	5.0	0	
22			0		5.8	103	48	8.3	7.0	5.0	0	
23			0		7.0	103	44	8.2	7.0	5.0	0	
24			0		8.1	59	54	7.3	6.7	5.0	0	
25			0		9.5	103	49	6.2	7.0	4.8	0	
26			0		11	85	43	5.1	7.0	4.7	0	
27			0		11	50	42	4.1	7.8	4.7	0	
28			1.1		11	58	34	3.4	8.3	4.7	0	
29			.22		---	52	31	2.8	8.3	4.7	0	
30			.04		---	52	49	2.2	8.3	4.7	0	
31		---	.01		---	52	---	1.6	---	4.7	0	---
TOTAL	0	0	4.74	0	90.85	10689.2	1921	203.34	95.14	184.0	53.6	0
MEAN	0	0	.15	0	3.24	345	64.0	6.56	3.17	5.94	1.73	0
MAX	0	0	3.2	0	11	3170	149	29	15	8.3	4.4	0
MIN	0	0	0	0	.02	1.2	31	.10	0	4.7	0	0
AC-FT	0	0	9.4	0	180	21200	3810	403	189	365	106	0

CAL YR 1974 TOTAL 9243.63 MEAN 25.3 MAX 1180 MIN 0 AC-FT 18330
WTR YR 1975 TOTAL 13241.87 MEAN 36.3 MAX 3170 MIN 0 AC-FT 26270

11123500 SANTA YNEZ RIVER BELOW LOS LAURELES CANYON, NEAR SANTA YNEZ, CALIF.

LOCATION.--Lat 34°32'37", long 119°51'50", in San Marcos Grant, Santa Barbara County, on left bank 0.3 mi (0.5 km) downstream from Los Laureles Canyon Creek, and 13.3 mi (21.4 km) east of Santa Ynez.

DRAINAGE AREA.--277 mi^2 (717 km^2).

PERIOD OF RECORD.--April 1947 to current year. Monthly discharge only for some periods, published in WSP 1315-B.

GAGE.--Water-stage recorder. Datum of gage is 787.8 ft (240.12 m) above mean sea level.

EXTREMES.--Current year: Maximum discharge, 6,660 ft^3/s (189 m^3/s) Mar. 8 (gage height, 9.24 ft or 2.816 m); no flow for several months.
Period of record: Maximum discharge, 67,500 ft^3/s (1,910 m^3/s) Jan. 25, 1969 (gage height, 18.88 ft or 5.755 m), from rating curve extended above 11,600 ft^3/s (329 m^3/s) on basis of maximum flow for station below Gibraltar Dam plus tributary inflow; no flow for several months in each year.

REMARKS.--Records good. Flow regulated by Jameson Lake and Gibraltar Reservoir (see sta 11121000, 11122000). Water diverted out of basin from these reservoirs to cities of Montecito and Santa Barbara for municipal supply. Low flow affected by intermittent pumping for irrigation from infiltration gallery in riverbed at station.

DISCHARGE, IN CUBIC FEET PER SECOND, WATER YEAR OCTOBER 1974 TO SEPTEMBER 1975

DAY	OCT	NOV	DEC	JAN	FEB	MAR	APR	MAY	JUN	JUL	AUG	SEP
1			0	9.2	6.8	20	89	61	8.2	8.3	0	
2			0	7.8	221	20	70	34	6.8	8.1	.02	
3			38	6.4	254	21	75	21	13	8.9	.49	
4			230	6.0	91	21	79	17	11	8.8	.69	
5			27	5.4	59	35	132	15	7.7	8.7	.28	
6			10	5.1	39	767	168	14	6.2	7.0	.04	
7			6.3	4.7	32	2,200	147	13	5.7	8.4	0	
8			4.6	4.6	27	4,370	112	13	5.4	8.3	0	
9			3.8	4.6	132	1,280	102	13	4.2	7.0	0	
10			3.4	4.3	132	776	91	13	4.7	7.3	0	
11			3.0	3.6	77	520	89	15	3.3	6.7	0	
12			2.7	3.5	52	357	87	20	3.9	6.4	0	
13			2.6	3.6	40	328	81	21	3.1	6.2	0	
14			2.6	3.3	34	330	83	22	3.1	5.2	0	
15			2.5	3.2	30	281	85	23	3.9	3.4	0	
16			2.3	3.0	26	268	85	23	3.5	3.1	0	
17			2.3	3.0	25	237	83	23	4.8	2.9	0	
18			2.3	2.9	23	82	75	22	3.8	2.7	0	
19			2.3	2.8	22	135	68	22	4.5	2.5	0	
20			2.3	2.8	21	157	64	22	3.7	2.2	0	
21			2.2	2.6	21	140	64	22	3.5	2.9	0	
22			1.9	2.5	20	151	64	23	3.9	3.8	0	
23			1.8	2.6	20	151	58	20	6.5	3.3	0	
24			1.8	2.6	20	134	58	19	10	3.1	0	
25			1.8	2.5	20	124	64	19	8.4	2.8	0	
26			1.8	2.5	20	127	56	16	8.4	2.5	0	
27			1.9	2.6	21	117	55	13	11	2.2	0	
28			35	2.6	21	91	55	12	9.4	2.0	0	
29			53	2.6	------	93	48	10	9.1	1.8	0	
30			19	2.9	------	93	46	9.1	8.8	1.8	0	
31		------	12	3.0	------	91	------	8.4	------	1.0	0	------
TOTAL	0	0	480.2	118.8	1,506.8	13,517	2,433	598.5	189.5	149.3	1.52	0
MEAN	0	0	15.5	3.83	53.8	436	81.1	19.3	6.32	4.82	.049	0
MAX	0	0	230	9.2	254	4,370	168	61	13	8.9	.69	0
MIN	0	0	0	2.5	6.8	20	46	8.4	3.1	1.0	0	0
AC-FT	0	0	952	236	2,990	26,810	4,830	1,190	376	296	3.0	0

CAL YR 1974 TOTAL 13,415.96 MEAN 36.8 MAX 1,220 MIN 0 AC-FT 26,610
WTR YR 1975 TOTAL 18,994.62 MEAN 52.0 MAX 4,370 MIN 0 AC-FT 37,680

11124500 SANTA CRUZ CREEK NEAR SANTA YNEZ, CALIF.

LOCATION.--Lat 34°35'48", long 119°54'28", in San Marcos Grant, Santa Barbara County, on right bank 0.6 mi (1.0 km) downstream from Pine Canyon, and 9.9 mi (15.9 km) east of Santa Ynez.

DRAINAGE AREA.--74.0 mi^2 (191.7 km^2).

PERIOD OF RECORD.--October 1941 to current year. Monthly discharge only for some periods, published in WSP 1315-B.

GAGE.--Water-stage recorder. Datum of gage is 783.38 ft (238.774 m) above mean sea level. See WSP 1735 for history of changes prior to Sept. 27, 1952. Sept. 27, 1952, to June 24, 1969, at datum 3.25 ft (0.991 m) higher.

AVERAGE DISCHARGE.--34 years, 16.8 ft^3/s (0.476 m^3/s), 12,170 acre-ft/yr (15.0 hm^3/yr).

EXTREMES.--Current year: Maximum discharge, 1,400 ft^3/s (39.6 m^3/s) Mar. 7 (gage height, 10.10 ft or 3.079 m), from rating curve extended above 96 ft^3/s (2.72 m^3/s) on basis of slope-area measurement at gage height 14.16 ft (4.316 m); no flow for several months.
Period of record: Maximum discharge, 7,050 ft^3/s (200 m^3/s) Feb. 24, 1969 (gage height, 14.45 ft or 4.404 m, from floodmark, present datum), from rating curve extended above 2,500 ft^3/s (70.8 m^3/s) on basis of slope-area measurement at gage height 14.16 ft (4.316 m); no flow at times since 1953.

REMARKS.--Records fair. No regulation or diversion above station.

DISCHARGE, IN CUBIC FEET PER SECOND, WATER YEAR OCTOBER 1974 TO SEPTEMBER 1975
MEAN VALUES

DAY	OCT	NOV	DEC	JAN	FEB	MAR	APR	MAY	JUN	JUL	AUG	SEP
1			0	1.1	1.9	4.7	22	17	7.2	1.5		
2			0	1.0	12	4.7	21	17	6.8	1.0		
3			0	.82	58	4.7	20	16	6.9	.66		
4			58	.82	26	4.4	20	16	7.0	.41		
5			2.3	.82	34	9.2	32	16	6.2	.21		
6			.23	.82	21	160	36	15	5.9	.11		
7			.02	.82	14	680	31	15	5.8	.04		
8			0	.91	11	563	27	15	5.6	.01		
9			0	1.0	54	167	27	14	5.2	0		
10			0	1.0	73	106	32	14	4.8	0		
11			0	1.0	34	80	29	13	4.7	0		
12			0	.91	17	54	28	13	4.2	0		
13			0	1.0	13	48	35	13	4.0	0		
14			0	1.0	11	50	36	12	3.9	0		
15			0	1.0	9.8	41	37	12	3.9	0		
16			0	1.0	8.7	38	32	12	3.6	0		
17			0	.91	7.8	35	28	11	3.5	0		
18			0	.91	6.9	32	26	11	3.6	0		
19			0	.91	6.5	30	25	11	3.4	0		
20			0	.91	6.1	29	24	11	3.4	0		
21			0	1.0	5.7	28	25	12	3.4	0		
22			0	1.0	5.4	44	25	11	3.2	0		
23			0	1.0	5.4	37	24	11	2.8	0		
24			0	1.0	5.1	31	23	10	2.7	0		
25			0	1.0	4.9	30	23	9.5	2.6	0		
26			0	1.0	4.8	28	22	9.2	2.3	0		
27			0	1.0	4.7	27	20	9.0	2.1	0		
28			3.3	1.1	4.7	25	19	8.8	2.0	0		
29			5.1	1.1	---	24	18	7.9	1.9	0		
30			1.9	1.4	---	23	17	7.6	1.6	0		
31		---	1.4	1.6	---	23	---	7.4	---	0		---
TOTAL	0	0	72.25	30.86	466.4	2460.7	784	377.4	124.2	3.94	0	0
MEAN	0	0	2.33	1.00	16.7	79.4	26.1	12.2	4.14	.13	0	0
MAX	0	0	58	1.6	73	680	37	17	7.2	1.5	0	0
MIN	0	0	0	.82	1.9	4.4	17	7.4	1.6	0	0	0
AC-FT	0	0	143	61	925	4880	1560	749	246	7.8	0	0

CAL YR 1974 TOTAL 3517.33 MEAN 9.64 MAX 359 MIN 0 AC-FT 6980
WTR YR 1975 TOTAL 4319.75 MEAN 11.8 MAX 680 MIN 0 AC-FT 8570

Peak discharge (base, 100 ft^3/s)

Date	Time	G.H.	Discharge	Date	Time	G.H.	Discharge
12-4	0815	8.76	383	3-7	2130	10.10	1,400
2-10	1245	8.34	186				

11125500 LAKE CACHUMA NEAR SANTA YNEZ, CALIF.

LOCATION.--Lat 34°34'57", long 119°58'47", in Lomas de la Purification Grant, Santa Barbara County, at Cachuma Dam on Santa Ynez River, on upstream face near left end of dam, 6.1 mi (9.8 km) east of Santa Ynez.

DRAINAGE AREA.--417 mi^2 (1,080 km^2).

PERIOD OF RECORD.--November 1952 to current year. Prior to October 1960, published as at Cachuma Reservoir near Santa Ynez.

GAGE.--Water-stage recorder. Datum of gage is at mean sea level (Bureau of Reclamation bench mark). Prior to Oct. 1, 1965, nonrecording gage.

EXTREMES.--Current year: Maximum contents, 205,900 acre-ft (254 hm^3) Mar. 10 (elevation, 750.33 ft or 228.701 m); minimum, 176,700 acre-ft (218 hm^3) Dec. 2 (elevation, 740.42 ft or 225.680 m).
Period of record: Maximum contents, 221,100 acre-ft (273 hm^3) Feb. 24, 1969 (elevation, 755.11 ft or 230.158 m); minimum since initial filling in April 1958, 116,900 acre-ft (144 hm^3) Jan. 7, 1973 (elevation, 716.19 ft or 218.295 m).

REMARKS.--Reservoir is formed by earthfill dam. Storage began November 1952. Capacity table is based on surveys made in January 1953. Dead storage below outlet gage to river (elevation, 600 ft or 182.9 m), 3,114 acre-ft (3.84 hm^3), included in contents. Capacity below sill of inlet to Tecolote tunnel (elevation, 660 ft or 201.2 m), 32,514 acre-ft (40.1 hm^3), below spillway level (elevation, 720 ft or 219.5 m), 125,292 acre-ft (154 hm^3); below top of 4 radial gates (elevation, 750 ft or 228.6 m), 204,874 acre-ft (253 hm^3). Water is released from outlet to Santa Ynez River to satisfy downstream water rights. Water diverted to Tecolote tunnel for use by city of Santa Barbara and nearby communities, to Santa Ynez River Water Conservation District, and to Cachuma recreation area.

COOPERATION.--Reservoir elevation, contents, and diversion figures furnished by Bureau of Reclamation.

MONTHEND ELEVATION AND CONTENTS, WATER YEAR OCTOBER 1974 TO SEPTEMBER 1975

Date	Elevation (feet)a	Contents (acre-feet)	Change in contents (acre-feet)	Total diversions (acre-feet)
Sept 30	742.30	182,000	--	--
Oct. 31	741.28	179,200	-2,800	1,760
Nov. 30	740.46	176,900	-2,300	1,470
Dec. 31	741.27	179,100	+2,200	717
CAL YR 1974	--	--	-2,700	22,330
Jan. 31	740.97	178,300	-800	981
Feb. 28	742.88	183,700	+5,400	653
Mar. 31	750.26	205,700	+22,000	960
Apr. 30	750.21	205,500	-200	1,320
May 31	749.61	203,700	-1,800	2,680
June 30	748.34	199,800	-3,900	2,820
July 31	746.60	194,600	-5,200	3,760
Aug. 31	744.76	189,100	-5,500	3,640
Sept. 30	743.15	184,500	-4,600	3,280
WTR YR 1975	--	--	+2,500	24,040

a Elevation at 2400.

11126000 SANTA YNEZ RIVER NEAR SANTA YNEZ, CALIF.

LOCATION.--Lat 34°35'21", long 119°59'16", in Canada de los Pinos Grant, Santa Barbara County, on right bank 0.7 mi (1.1 km) downstream from Cachuma Dam, and 5.5 mi (8.8 km) southeast of Santa Ynez.

DRAINAGE AREA.--422 mi^2 (1,093 km^2).

PERIOD OF RECORD.--December 1928 to September 1931, October 1932 to current year.

GAGE.--Water-stage recorder. Datum of gage is 545.66 ft (166.317 m) above mean sea level (Bureau of Reclamation bench mark). Prior to Oct. 1, 1955, at site 2.5 mi (4.0 km) downstream at different datum. Oct. 1, 1955, to Sept. 16, 1969, at site 0.4 mi (0.6 km) downstream at datum 7.2 ft (2.19 m) higher.

EXTREMES.--Current year: Maximum discharge, 2,000 ft^3/s (56.6 m^3/s) Mar. 10 (gage height, 6.56 ft or 2.000 m); no flow many days.
Period of record: Maximum discharge, 79,000 ft^3/s (2,240 m^3/s) Jan. 25, 1969 (gage height, 22.00 ft or 6.706 m, from floodmark, present datum), on basis of computation of maximum flow over dam; no flow at times in some years.

REMARKS.--Records fair above 10 ft^3/s (0.28 m^3/s) and poor below. Flow regulated by Jameson Lake since December 1930, Gibraltar Reservoir, and Lake Cachuma since November 1952 (see sta 11121000, 11122000, 11125500). Water diverted out of basin from Jameson Lake, Gibraltar Reservoir, and Lake Cachuma to cities of Montecito, Santa Barbara, and to the Santa Ynez Valley for municipal supply. Some water pumped from wells along river banks for irrigation.

DISCHARGE, IN CUBIC FEET PER SECOND, WATER YEAR OCTOBER 1974 TO SEPTEMBER 1975
MEAN VALUES

DAY	OCT	NOV	DEC	JAN	FEB	MAR	APR	MAY	JUN	JUL	AUG	SEP
1	57		0		0	0	84	17	1.2	.21	0	0
2	57		0		1.8	0	71	15	1.1	.20	0	0
3	57		0		3.0	0	25	13	1.0	.18	0	0
4	11		100		1.9	0	33	11	.97	.18	0	0
5	.27		1.5		2.1	3.8	135	10	.92	.17	0	0
6	.27		0		1.2	128	333	9.0	.86	.16	0	0
7	.24		0		.90	280	206	8.0	.80	.15	0	0
8	.07		0		.60	114	167	7.2	.76	.14	11	5.8
9	0		0		2.0	157	114	6.6	.72	.13	16	8.1
10	0		0		8.0	1920	98	6.0	.67	.12	30	12
11	0		0		4.0	697	95	5.5	.64	.12	30	7.8
12	0		0		2.0	450	101	5.0	.60	.11	27	.26
13	0		0		1.0	353	95	4.6	.57	.11	7.0	0
14	0		0		.60	348	87	4.2	.53	.10	1.1	0
15	0		0		.45	313	84	3.9	.50	.05	.03	0
16	0		0		.40	271	150	3.6	.48	.02	0	0
17	0		0		.34	250	142	3.3	.45	.01	0	0
18	0		0		.30	165	74	3.0	.42	0	0	0
19	0		0		.28	92	71	2.8	.40	0	0	0
20	0		0		.26	154	80	2.6	.38	0	0	0
21	0		0		.24	150	64	2.4	.36	0	0	0
22	0		0		.22	150	35	2.3	.34	0	0	0
23	0		0		.21	204	59	2.1	.32	0	0	0
24	0		0		.20	218	55	2.0	.30	0	0	0
25	0		0		.17	175	76	1.8	.28	0	0	0
26	0		0		.14	114	71	1.7	.27	0	0	0
27	0		0		.11	114	66	1.6	.26	0	0	0
28	0		.35		0	111	34	1.5	.24	0	0	0
29	0		.20		---	84	24	1.4	.23	0	0	0
30	0		.10		---	87	20	1.3	.22	0	0	0
31	0	---	0		---	96	---	1.2	---	0	0	---
TOTAL	182.85	0	102.15	0	32.42	7198.8	2749	160.6	16.79	2.16	122.13	33.96
MEAN	5.90	0	3.30	0	1.16	232	91.6	5.18	.56	.070	3.94	1.13
MAX	57	0	100	0	8.0	1920	333	17	1.2	.21	30	12
MIN	0	0	0	0	0	0	20	1.2	.22	0	0	0
AC-FT	363	0	203	0	64	14280	5450	319	33	4.3	242	67

CAL YR 1974 TOTAL 3904.04 MEAN 10.7 MAX 239 MIN 0 AC-FT 7740
WTR YR 1975 TOTAL 10600.86 MEAN 29.0 MAX 1920 MIN 0 AC-FT 21030

NOTE.--Indefinite or no gage-height record Apr. 29 to July 18.

11128250 ALAMO PINTADO CREEK NEAR SOLVANG, CALIF.

LOCATION.--Lat 34°37'06", long 120°07'11", in SE¼NW¼NW¼ sec.11, T.6 N., R.31 W., Santa Barbara County, on right bank at downstream side of bridge on Alamo Pintado Road, 1.5 mi (2.4 km) northeast of Solvang.

DRAINAGE AREA.--29.4 mi^2 (76.1 km^2).

PERIOD OF RECORD.--October 1970 to current year.

GAGE.--Water-stage recorder. Datum of gage is 540.49 ft (164.741 m) above mean sea level (Santa Barbara County bench mark).

AVERAGE DISCHARGE.--5 years, 0.096 ft^3/s (0.0027 m^3/s), 70 acre-ft/yr (86,300 m^3/yr).

EXTREMES.--Current year: Maximum discharge, 40 ft^3/s (1.13 m^3/s) Mar. 7 (gage height, 3.66 ft or 1.116 m); no flow most of year.

Period of record: Maximum discharge, 466 ft^3/s (13.2 m^3/s) Jan. 18, 1973 (gage height, 6.00 ft or 1.829 m, from floodmark), from rating curve extended above 3.2 ft^3/s (0.091 m^3/s) on basis of slope-area measurement of peak flow; no flow most of each year.

Flood of Jan. 25, 1969, reached a stage of 10.32 ft (3.146 m).

REMARKS.--Records poor. No regulation above station. Pumping from wells along stream for irrigation.

DISCHARGE, IN CUBIC FEET PER SECOND, WATER YEAR OCTOBER 1974 TO SEPTEMBER 1975
MEAN VALUES

DAY	OCT	NOV	DEC	JAN	FEB	MAR	APR	MAY	JUN	JUL	AUG	SEP
1			0		0	0						
2			0		5.6	0						
3			.01		11	0						
4			0		1.8	0						
5			0		5.5	.42						
6			0		0	1.3						
7			0		0	15						
8			0		0	12						
9			0		0	1.3						
10			0		0	.02						
11			0		0	0						
12			0		0	0						
13			0		0	0						
14			0		0	0						
15			0		0	0						
16			0		0	0						
17			0		0	0						
18			0		0	0						
19			0		0	0						
20			0		0	0						
21			0		0	0						
22			0		0	0						
23			0		0	0						
24			0		0	0						
25			0		0	0						
26			0		0	0						
27			0		0	0						
28			0		0	0						
29			0		---	0						
30			0		---	0						
31		---	0		---	0	---		---			---
TOTAL	0	0	.01	0	23.9	30.04	0	0	0	0	0	0
MEAN	0	0	.0003	0	.85	.97	0	0	0	0	0	0
MAX	0	0	.01	0	11	15	0	0	0	0	0	0
MIN	0	0	0	0	0	0	0	0	0	0	0	0
AC-FT	0	0	.02	0	47	60	0	0	0	0	0	0

CAL YR 1974 TOTAL 30.33 MEAN .083 MAX 30 MIN 0 AC-FT 60
WTR YR 1975 TOTAL 53.95 MEAN .15 MAX 15 MIN 0 AC-FT 107

Peak discharge (base, 10 ft^3/s)

Date	Time	G.H.	Discharge	Date	Time	G.H.	Discharge
2-2	2000	3.64	38	3-7	1930	3.66	40
2-4	2400	3.24	16				

11128300 ALISAL RESERVOIR NEAR SOLVANG, CALIF.

LOCATION (revised).--Lat 34°32'56", long 120°07'45", in SE¼NE¼NW¼ sec.4, T.5 N., R.31 W., Santa Barbara County, in cove, on right bank 0.4 mi (0.6 km) upstream from reservoir spillway, and 3 mi (5 km) south of Solvang.

DRAINAGE AREA.--7.83 mi^2 (20.28 km^2).

PERIOD OF RECORD.--December 1971 to current year.

GAGE.--Water-stage recorder. Datum of gage is at mean sea level.

EXTREMES.--Current year: Maximum contents, 2,610 acre-ft (3.22 hm^3) Mar. 7 (elevation, 602.60 ft or 183.672 m); minimum, 2,220 acre-ft (2.74 hm^3) Dec. 2 (elevation, 598.18 ft or 182.325 m).
Period of record: Maximum contents, 2,650 acre-ft (3.27 hm^3) Feb. 27, 1973 (elevation, 602.95 ft or 183.779 m); minimum, 748 acre-ft (922,000 m^3) Nov. 8-10, 1972 (elevation, 577.15 ft or 175.915 m).

REMARKS.--Lake is formed by earthfill dam. Storage began Dec. 19, 1970. Usable capacity, 2,260 acre-ft (2.79 hm^3) between bottom of outlet gate at elevation 555.70 ft (169.377 m) and crest of spillway at elevation 599.88 ft (182.843 m). Dead storage, 110 acre-ft (136,000 m^3). Inflow must total 150 acre-ft (185,000 m^3) during any one month between November and June to store flow for year.

MONTHEND ELEVATION AND CONTENTS, WATER YEAR OCTOBER 1974 TO SEPTEMBER 1975

Date	Elevation (feet)a	Contents (acre-feet)	Change in contents (acre-feet)
Sept. 30.....	598.62	2,260	--
Oct. 31.....	598.39	2,240	-20
Nov. 30.....	598.20	2,220	-20
Dec. 31.....	600.42	2,420	+200
CAL YR 1974.....	--	--	+100
Jan. 31.....	600.36	2,410	-10
Feb. 28.....	600.35	2,410	0
Mar. 31.....	600.37	2,410	0
Apr. 30.....	600.35	2,410	0
May 31.....	600.27	2,400	-10
June 30.....	600.22	2,400	0
July 31.....	599.92	2,370	-30
Aug. 31.....	599.48	2,330	-40
Sept. 30.....	599.11	2,300	-30
WTR YR 1975.....	--	--	+40

a Elevation at 1800.

11128500 SANTA YNEZ RIVER AT SOLVANG, CALIF.

LOCATION.--Lat 34°35'06", long 120°08'37", in San Carlos de Jonata Grant, Santa Barbara County, on downstream side of right abutment of Mission bridge, 25 ft (8 m) downstream from Alisal Creek, and 0.8 mi (1.3 km) southwest of Solvang.

DRAINAGE AREA.--579 mi^2 (1,500 km^2).

PERIOD OF RECORD.--October 1928 to November 1936, June 1937 to November 1940 (irrigation seasons only), October 1946 to current year.

GAGE.--Water-stage recorder. Datum of gage is 362.43 ft (110.469 m) above mean sea level. Various datums used during period of record. July 29 to Sept. 30, 1953, auxiliary water-stage recorder 750 ft (229 m) upstream at different datum. Oct. 1, 1953, to Sept. 30, 1968, water-stage recorder at datum 2.00 ft (0.610 m) higher.

EXTREMES.--Current year: Maximum discharge, 2,110 ft^3/s (59.8 m^3/s) Mar. 7 (gage height, 7.07 ft or 2.155 m); no flow for several months.
Period of record (1928-36, 1946 to current year): Maximum discharge, 82,000 ft^3/s (2,320 m^3/s), estimated, Jan. 25, 1969 (gage height, 17.1 ft or 5.21 m, from floodmark); no flow for several months in many years.

REMARKS.--Records good. Flow regulated by Jameson Lake, Gibraltar Reservoir, and since November 1952 by Lake Cachuma (see sta 11121000, 11122000, 11125500). Water diverted out of basin from Jameson Lake, Gibraltar Reservoir, and Lake Cachuma to cities of Montecito, Santa Barbara, and Goleta for municipal supply. Some water for irrigation pumped from wells along banks of river in valley upstream.

DISCHARGE, IN CUBIC FEET PER SECOND, WATER YEAR OCTOBER 1974 TO SEPTEMBER 1975
MEAN VALUES

DAY	OCT	NOV	DEC	JAN	FEB	MAR	APR	MAY	JUN	JUL	AUG	SEP
1			0	6.8	10	11	115	43	3.5			
2			0	6.8	663	11	102	38	4.1			
3			74	8.1	471	10	72	44	4.7			
4			575	6.0	78	9.5	64	40	4.9			
5			8.3	6.0	29	32	123	36	5.2			
6			.80	6.5	8.3	122	374	28	5.3			
7			.65	7.4	4.5	860	274	27	5.3			
8			.38	7.5	2.7	1020	236	25	5.5			
9			.23	7.6	163	338	169	21	5.3			
10			.19	6.4	163	1190	148	19	4.8			
11			.07	5.3	78	1000	140	20	4.3			
12			.06	4.7	50	662	140	19	4.1			
13			0	4.4	41	516	138	17	4.2			
14			0	4.1	37	504	127	17	3.9			
15			0	3.8	31	455	113	16	3.7			
16			0	3.6	27	384	141	15	3.3			
17			0	3.3	25	330	202	15	2.9			
18			0	3.1	21	281	101	12	2.3			
19			0	3.8	18	151	89	11	2.0			
20			0	3.6	16	193	103	10	1.2			
21			0	3.3	15	190	93	8.7	.71			
22			0	3.1	13	198	71	6.8	.30			
23			0	2.9	13	216	78	6.2	.14			
24			0	3.1	15	241	80	5.4	.07			
25			0	3.1	14	226	90	5.0	0			
26			0	3.1	13	172	108	5.1	0			
27			18	3.1	12	147	87	4.6	0			
28			88	3.3	12	155	89	4.2	0			
29			39	3.3	---	119	57	3.7	0			
30			14	3.3	---	117	51	3.6	0			
31		---	9.5	3.5	---	127	---	3.3	---			---
TOTAL	0	0	828.18	143.9	2043.5	9987.5	3775	529.6	81.72	0	0	0
MEAN	0	0	26.7	4.64	73.0	322	126	17.1	2.72	0	0	0
MAX	0	0	575	8.1	663	1190	374	44	5.5	0	0	0
MIN	0	0	0	2.9	2.7	9.5	51	3.3	0	0	0	0
AC-FT	0	0	1640	285	4050	19810	7490	1050	162	0	0	0

CAL YR 1974 TOTAL 6188.57 MEAN 17.0 MAX 832 MIN 0 AC-FT 12280
WTR YR 1975 TOTAL 17389.40 MEAN 47.6 MAX 1190 MIN 0 AC-FT 34490

SANTA YNEZ RIVER BASIN

11129800 ZACA CREEK NEAR BUELLTON, CALIF.

LOCATION.--Lat 34°38'55", long 120°11'00", in San Carlos de Jonata Grant, Santa Barbara County, on upstream end of left pier of bridge on frontage road, 0.9 mi (1.4 km) upstream from Dry Creek, 2.4 mi (3.9 km) north of Buellton, and 4.0 mi (6.4 km) upstream from mouth.

DRAINAGE AREA.--32.8 mi^2 (85.0 km^2).

PERIOD OF RECORD.--September 1963 to current year.

GAGE.--Water-stage recorder. Datum of gage is 471.54 ft (143.725 m) above mean sea level.

AVERAGE DISCHARGE.--12 years, 0.95 ft^3/s (0.0269 m^3/s), 688 acre-ft/yr (848,000 m^3/yr).

EXTREMES.--Current year: Maximum discharge, 48 ft^3/s (1.36 m^3/s) Feb. 2 (gage height, 3.02 ft or 0.920 m); no flow most of year.
Period of record: Maximum discharge, 1,390 ft^3/s (39.4 m^3/s) Feb. 24, 1969 (gage height, 9.20 ft or 2.804 m); no flow most of each year.

REMARKS.--Records good. Slight regulation by Zaca Lake. Some pumping from wells along stream for irrigation above station.

DISCHARGE, IN CUBIC FEET PER SECOND, WATER YEAR OCTOBER 1974 TO SEPTEMBER 1975
MEAN VALUES

DAY	OCT	NOV	DEC	JAN	FEB	MAR	APR	MAY	JUN	JUL	AUG	SEP
1			0		0	0	.05					
2			0		8.0	0	.04					
3			.70		2.8	0	.04					
4			1.4		1.1	0	.04					
5			0		.46	.72	.07					
6			0		.07	1.8	.09					
7			0		0	5.7	.07					
8			0		0	5.0	.05					
9			0		.04	2.5	.05					
10			0		.25	5.4	.03					
11			0		0	4.3	.04					
12			0		0	3.0	.03					
13			0		0	2.7	.01					
14			0		0	2.5	.04					
15			0		0	1.9	.03					
16			0		0	1.6	.01					
17			0		0	1.1	.01					
18			0		0	.81	0					
19			0		0	.81	0					
20			0		0	.59	0					
21			0		0	.59	0					
22			0		0	2.5	0					
23			0		0	.59	0					
24			0		0	.41	0					
25			0		0	.41	0					
26			0		0	.36	0					
27			0		0	.07	0					
28			.48		0	.07	0					
29			0		---	.07	0					
30			0		---	.05	0					
31		---	0		---	.07	---		---			---
TOTAL	0	0	2.58	0	12.72	45.62	.70	0	0	0	0	0
MEAN	0	0	.083	0	.45	1.47	.023	0	0	0	0	0
MAX	0	0	1.4	0	8.0	5.7	.09	0	0	0	0	0
MIN	0	0	0	0	0	0	0	0	0	0	0	0
AC-FT	0	0	5.1	0	25	90	1.4	0	0	0	0	0

CAL YR 1974 TOTAL 30.66 MEAN .084 MAX 9.0 MIN 0 AC-FT 61
WTR YR 1975 TOTAL 61.62 MEAN .17 MAX 8.0 MIN 0 AC-FT 122

Peak discharge (base, 10 ft^3/s)

Date	Time	G.H.	Discharge	Date	Time	G.H.	Discharge
12-4	0030	2.66	22	3-7	2200	2.60	18
2-2	1530	3.02	48	3-10	1830	2.60	18

11131500 SANTA YNEZ RIVER AT COOPER'S REEF, NEAR LOMPOC, CALIF.

LOCATION.--Lat 34°36'48", long 120°21'23", near boundary of Canada de Salsipuedes Grant, Santa Barbara County, on right bank 0.6 mi (1.0 km) upstream from Canada de la Vina, and 6 mi (10 km) east of Lompoc.

DRAINAGE AREA.--708 mi^2 (1,830 km^2).

PERIOD OF RECORD.--October 1954 to current year.

GAGE.--Water-stage recorder. Altitude of gage is 160 ft (49 m), from topographic map. Prior to Sept. 18, 1969, at site 100 ft (30 m) downstream at datum about 0.6 ft (0.18 m) higher (reference marks destroyed by floods of 1969).

EXTREMES.--Current year: Maximum discharge, 4,600 ft^3/s (130 m^3/s) Mar. 8 (gage height, 9.60 ft or 2.926 m), from rating curve extended above 389 ft^3/s (11.0 m^3/s); no flow for several days.
Period of record: Maximum discharge, 81,000 ft^3/s (2,290 m^3/s), estimated, Jan. 25, 1969 (gage height, 22.5 ft or 6.86 m, site and datum then in use, from floodmark); no flow for several months in some years.

REMARKS.--Records fair except those for missing record and flows above 400 ft^3/s (11.3 m^3/s), which are poor. Flow regulated by Jameson Lake, Gibraltar Reservoir, and Lake Cachuma (see sta 11121000, 11122000, 11125500). Water diverted out of basin from Jameson Lake, Gibraltar Reservoir, and Lake Cachuma to cities of Montecito, Santa Barbara, and Goleta for municipal supply. Water pumped from wells along banks of river for irrigation in valley upstream.

DISCHARGE, IN CUBIC FEET PER SECOND, WATER YEAR OCTOBER 1974 TO SEPTEMBER 1975
MEAN VALUES

DAY	OCT	NOV	DEC	JAN	FEB	MAR	APR	MAY	JUN	JUL	AUG	SEP
1	0	.01	.01	26	13	28	169	53	6.3	1.2	.10	.01
2	0	.01	.01	21	431	28	155	46	6.7	1.0	.10	.01
3	0	.01	2.7	16	1010	27	152	39	6.4	1.0	.10	.01
4	0	.01	519	14	356	27	131	38	6.4	1.0	.10	.01
5	0	.01	98	13	181	35	143	36	6.1	1.0	.10	.01
6	0	.01	29	13	119	130	274	34	4.8	1.0	.10	.01
7	.01	.01	13	12	95	862	380	30	4.7	1.0	.10	.01
8	.01	.01	5.1	13	80	2560	244	27	4.8	1.0	.10	.01
9	.01	.01	2.3	12	113	713	191	24	4.7	.85	.10	.01
10	.01	.01	1.0	12	311	993	154	21	3.9	.85	.10	.02
11	.01	.01	.60	12	201	1430	134	20	3.8	.71	.10	.02
12	.01	.01	.46	11	133	751	130	18	3.4	.85	.10	.02
13	.01	.01	.34	11	108	614	134	17	2.7	.85	.10	.02
14	.01	.01	.25	11	94	567	134	16	2.9	.71	.10	.02
15	.01	.01	.22	10	81	533	127	14	2.7	.71	.10	.02
16	.01	.01	.22	9.5	72	470	124	13	4.0	.67	.10	.02
17	0	.01	.28	8.9	65	414	179	9.7	3.5	.63	.08	.02
18	0	.01	.29	8.7	58	388	154	8.9	2.7	.58	.07	.02
19	.01	.01	.29	8.3	53	237	98	10	2.1	.47	.05	.02
20	.01	.01	.29	8.3	51	183	101	12	2.0	.58	.04	.02
21	.01	.01	.31	8.3	45	204	101	9.7	1.9	.58	.03	.03
22	.01	.01	.37	7.8	41	208	83	7.8	2.5	.37	.03	.03
23	.01	.01	.37	7.7	38	199	79	7.0	3.2	.33	.02	.03
24	.01	.01	.30	7.7	37	230	81	7.1	2.1	.29	.02	.03
25	.01	.01	.38	8.0	34	240	83	7.4	1.5	.26	.01	.03
26	.01	.01	.47	8.6	32	208	91	7.9	1.5	.24	.01	.03
27	.01	.01	1.4	8.7	31	172	93	7.3	1.5	.22	0	.03
28	.01	.01	56	8.1	30	175	86	7.4	1.5	.20	0	.04
29	.01	.01	98	8.2	---	168	80	7.5	1.5	.12	0	.04
30	.01	.01	60	8.3	---	154	63	6.8	1.5	.10	0	.04
31	.01	---	37	8.4	---	164	---	6.2	---	.10	.01	---
TOTAL	.23	.30	927.96	340.5	3913	13112	4148	568.7	103.3	19.47	1.97	.64
MEAN	.007	.010	29.9	11.0	140	423	138	18.3	3.44	.63	.064	.021
MAX	.01	.01	519	26	1010	2560	380	53	6.7	1.2	.10	.04
MIN	0	.01	.01	7.7	13	27	63	6.2	1.5	.10	0	.01
AC-FT	.5	.6	1840	675	7760	26010	8230	1130	205	39	3.9	1.3

CAL YR 1974 TOTAL 8634.36 MEAN 23.7 MAX 760 MIN 0 AC-FT 17130
WTR YR 1975 TOTAL 23136.07 MEAN 63.4 MAX 2560 MIN 0 AC-FT 45890

NOTE.--No gage-height record July 30 to Sept. 30.

11132500 SALSIPUEDES CREEK NEAR LOMPOC, CALIF.

LOCATION.--Lat 34°35'19", long 120°24'27", in W½ sec.24, T.6 N., R.34 W., Santa Barbara County, on right bank at bridge on Jalama Road, 0.4 mi (0.6 km) downstream from El Jaro Creek, and 4.4 mi (7.1 km) southeast of Lompoc.

DRAINAGE AREA.--47.1 mi^2 (122.0 km^2).

PERIOD OF RECORD.--January 1941 to current year.

GAGE.--Water-stage recorder and concrete low-water control. Altitude of gage is 220 ft (67 m), from topographic map.

AVERAGE DISCHARGE.--34 years, 8.77 ft^3/s (0.248 m^3/s), 6,350 acre-ft/yr (7.83 hm^3/yr).

EXTREMES.--Current year: Maximum discharge, 5,250 ft^3/s (149 m^3/s) Mar. 7 (gage height, 11.48 ft or 3.499 m); minimum daily, 0.69 ft^3/s (0.020 m^3/s) Oct. 1-3, 6, 7, 13-21.
Period of record: Maximum discharge, 11,400 ft^3/s (323 m^3/s) Mar. 15, 1952 (gage height, 20.8 ft or 6.34 m); no flow at times in some years.

REMARKS.--Records good. No regulation above station. Small diversions for irrigation above station.

DISCHARGE, IN CUBIC FEET PER SECOND, WATER YEAR OCTOBER 1974 TO SEPTEMBER 1975
MEAN VALUES

DAY	OCT	NOV	DEC	JAN	FEB	MAR	APR	MAY	JUN	JUL	AUG	SEP
1	.69	.86	1.7	7.6	10	11	21	8.8	6.2	3.6	2.6	1.7
2	.69	.86	1.6	6.4	459	10	20	8.4	5.7	3.7	2.5	1.8
3	.69	.86	265	5.4	212	10	19	8.4	5.7	3.8	2.6	1.8
4	.86	.86	232	5.2	117	10	19	7.2	6.7	3.7	2.4	2.3
5	.86	.86	7.8	4.8	53	22	22	6.9	6.7	3.7	2.4	2.4
6	.69	.86	4.2	4.9	31	49	25	6.9	6.2	3.5	2.2	2.4
7	.69	.86	3.5	5.9	24	1540	21	7.0	6.7	3.6	2.2	2.2
8	.86	.86	2.8	5.2	21	324	20	6.4	6.7	3.3	1.9	2.2
9	.86	.86	2.4	4.6	243	109	18	6.2	6.4	3.1	1.8	2.1
10	.86	.86	2.2	3.9	111	113	16	6.0	6.3	3.1	2.3	2.5
11	.86	.86	2.2	4.1	45	130	16	6.0	6.2	3.1	2.4	2.6
12	.86	.86	2.2	3.8	33	82	15	6.0	6.1	3.1	2.3	2.6
13	.69	.86	2.2	3.8	29	69	15	6.0	8.0	3.4	2.4	2.7
14	.69	.86	2.2	3.4	25	99	15	6.0	5.8	3.4	2.6	2.4
15	.69	.86	2.3	3.4	21	53	15	6.0	5.6	3.4	2.6	2.1
16	.69	.86	2.2	3.4	19	60	15	6.0	5.5	3.6	2.5	1.9
17	.69	.86	2.2	3.1	17	42	15	6.0	5.3	3.6	2.3	1.8
18	.69	.86	2.2	3.0	16	38	14	6.0	5.1	3.6	2.3	1.7
19	.69	.86	2.2	3.0	15	36	13	6.0	4.8	3.6	2.3	1.7
20	.69	.86	2.2	3.0	15	33	13	6.0	4.6	3.6	2.1	1.6
21	.69	1.0	2.2	3.2	13	32	13	6.0	4.5	3.6	2.1	1.7
22	.86	1.5	2.2	3.1	12	146	13	6.0	4.4	3.6	2.4	1.7
23	.86	1.3	2.2	3.0	12	40	12	6.0	4.3	3.4	2.1	1.5
24	.86	.97	2.3	3.0	12	37	12	6.0	4.2	3.1	1.8	1.2
25	.86	1.0	2.3	3.0	12	38	12	6.0	4.0	3.2	1.7	1.2
26	.86	1.1	2.2	3.0	11	33	12	6.0	3.9	3.3	1.8	1.2
27	.86	1.2	17	3.0	11	29	11	6.0	3.8	3.1	1.8	1.3
28	1.1	1.4	183	2.8	11	25	10	5.7	4.1	3.5	2.0	1.5
29	3.0	1.5	25	3.0	---	24	10	6.0	3.6	3.6	2.3	1.8
30	1.6	1.6	17	3.0	---	23	9.8	6.2	3.6	3.6	2.1	2.1
31	.86	---	14	3.0	---	22	---	5.7	---	3.2	1.7	---
TOTAL	27.40	29.77	814.7	121.0	1610	3289	461.8	197.8	160.7	106.7	68.5	57.7
MEAN	.88	.99	26.3	3.90	57.5	106	15.4	6.38	5.36	3.44	2.21	1.92
MAX	3.0	1.6	265	7.6	459	1540	25	8.8	8.0	3.8	2.6	2.7
MIN	.69	.86	1.6	2.8	10	10	9.8	5.7	3.6	3.1	1.7	1.2
AC-FT	54	59	1620	240	3190	6520	916	392	319	212	136	114

CAL YR 1974	TOTAL	3389.17	MEAN	9.29	MAX	805	MIN	.48	AC-FT	6720
WTR YR 1975	TOTAL	6945.07	MEAN	19.0	MAX	1540	MIN	.69	AC-FT	13780

Peak discharge (base, 200 ft^3/s, revised)

Date	Time	G.H.	Discharge	Date	Time	G.H.	Discharge
12-3	2230	6.79	2,320	3-7	1645	11.48	5,250
12-28	0200	3.55	570	3-11	1100	2.71	254
2-2	1215	6.22	1,970	3-22	0315	3.60	590
2-9	0545	3.60	590				

11133000 SANTA YNEZ RIVER AT NARROWS, NEAR LOMPOC, CALIF.

LOCATION.--Lat 34°38'16", long 120°25'32", in Canada de Salsipuedes Grant, Santa Barbara County, on left bank 0.5 mi (0.8 km) upstream from State Highway 246, 1.9 mi (3.1 km) east of Lompoc, and 1.9 mi (3.1 km) downstream from Salsipuedes Creek.

DRAINAGE AREA.--789 mi^2 (2,040 km^2).

PERIOD OF RECORD.--May 1947 to November 1951 (irrigation seasons only). May 1952 to September 1963, October 1964 to current year. Records equivalent, excepting low-flow periods, to those published as "near Lompoc" (sta 11133500), November to December 1906, October 1907 to September 1918, May 1925 to September 1960.

GAGE.--Water-stage recorder. Altitude of gage is 90 ft (27 m), from topographic map. See WSP 1715 for history of changes prior to Oct. 1, 1961. Since Oct. 1, 1961, at various sites and datums within 0.1 mi (0.2 km) of present site and supplementary water-stage recorder at site 0.5 mi (0.8 km) downstream at datum 79.25 ft (24.155 m) above mean sea level (now used for high-water periods).

EXTREMES.--Current year: Maximum discharge, 6,900 ft^3/s (195 m^3/s) Mar. 7 (gage height, 10.30 ft or 3.139 m, from supplementary gage); no flow many days.
Period of record (1952-63, 1964 to current year): Maximum discharge, 80,000 ft^3/s (2,270 m^3/s) Jan. 25, 1969 (gage height, 24.20 ft or 7.376 m, from supplementary gage); no flow at times in each year.
Flood of Jan. 9, 1907, 120,000 ft^3/s (3,400 m^3/s), gage height, 22.0 ft (6.71 m), site and datum then in use, from discharge-mean depth study.

REMARKS.--Records fair. Flow regulated by Jameson Lake, Gibraltar Reservoir, and since November 1952 by Lake Cachuma (see sta 11121000, 11122000, 11125500). Water diverted out of Jameson Lake, Gibraltar Reservoir, and Lake Cachuma to cities of Montecito, Santa Barbara, and Goleta for municipal supply. Water pumped from wells along banks of river for irrigation in valley upstream.

DISCHARGE, IN CUBIC FEET PER SECOND, WATER YEAR OCTOBER 1974 TO SEPTEMBER 1975
MEAN VALUES

DAY	OCT	NOV	DEC	JAN	FEB	MAR	APR	MAY	JUN	JUL	AUG	SEP
1			0	28	14	41	183	80	9.7	2.2	1.0	1.0
2			0	22	460	41	154	71	9.3	2.2	.96	.98
3			29	17	1010	39	139	61	8.6	2.3	.90	.97
4			573	15	491	38	120	58	8.1	2.0	.87	.88
5			171	14	257	45	118	55	8.2	2.5	.84	.80
6			40	13	162	155	199	52	8.1	2.4	.80	.82
7			22	13	133	2140	391	48	7.4	2.4	.77	.80
8			11	13	120	3440	291	42	7.5	2.6	.74	.87
9			7.2	13	342	1370	269	40	7.5	2.1	.71	.92
10			4.8	12	436	1110	209	37	7.4	2.2	.67	.99
11			4.6	11	269	1960	181	34	6.7	1.5	.65	1.1
12			4.4	9.4	168	971	178	32	6.3	2.3	.62	1.2
13			4.2	9.4	132	740	192	31	5.9	2.6	.48	1.5
14			4.1	9.9	114	710	185	30	5.9	2.6	.46	1.5
15			4.0	11	96	570	165	28	5.3	2.2	.47	1.3
16			3.9	11	87	515	168	27	5.1	1.7	.47	1.1
17			3.9	9.9	80	425	224	26	4.8	1.9	.66	.95
18			3.9	9.9	71	398	236	24	4.5	1.7	.78	.99
19			3.9	9.7	64	317	156	24	4.1	2.0	.70	.97
20			4.2	9.9	61	237	150	24	3.6	2.0	.60	1.0
21			4.1	10	59	265	156	22	3.5	1.9	.69	1.2
22			4.2	9.7	55	490	122	19	3.6	1.8	.86	1.3
23			3.9	9.5	54	285	106	18	3.5	1.5	.94	1.1
24			3.9	9.2	55	310	109	17	3.1	1.3	.93	.70
25			4.1	9.0	53	314	114	15	3.0	1.3	.96	.40
26			4.4	9.6	48	274	116	15	2.8	1.3	.92	.34
27			4.4	10	42	216	129	14	2.2	1.2	.91	.36
28			159	10	41	207	121	13	2.3	1.2	2.0	.42
29			83	9.7	---	207	119	13	2.0	1.1	1.1	.60
30			64	9.9	---	184	103	11	2.6	1.1	1.0	.63
31		---	49	9.4	---	181	---	10	---	1.0	.99	---
TOTAL	0	0	1283.1	367.1	4974	18195	5103	991	162.6	58.1	25.45	27.69
MEAN	0	0	41.4	11.8	178	587	170	32.0	5.42	1.87	.82	.92
MAX	0	0	573	28	1010	3440	391	80	9.7	2.6	2.0	1.5
MIN	0	0	0	9.0	14	38	103	10	2.0	1.0	.46	.34
AC-FT	0	0	2550	728	9870	36090	10120	1970	323	115	50	55

CAL YR 1974 TOTAL 11511.21 MEAN 31.5 MAX 945 MIN 0 AC-FT 22830
WTR YR 1975 TOTAL 31187.04 MEAN 85.4 MAX 3440 MIN 0 AC-FT 61860

11133700 PURISIMA CREEK NEAR LOMPOC, CALIF.

LOCATION.--Lat 34°41'34", long 120°25'51", in La Purisima Grant, Santa Barbara County, on right bank 1.1 mi (1.8 km) northeast of junction of Buener Road and Lompoc-Casmalia Road, and 4.0 mi (6.4 km) northeast of Lompoc.

DRAINAGE AREA.--4.75 mi^2 (12.30 km^2).

PERIOD OF RECORD.--October 1970 to September 1975 (discontinued as continuous-record station; converted to a crest-stage partial-record station).

GAGE.--Water-stage recorder. Altitude of gage is 270 ft (82 m), from topographic map.

AVERAGE DISCHARGE.--5 years, 0.14 ft^3/s (0.004 m^3/s), 101 acre-ft/yr (125,000 m^3/yr).

EXTREMES.--Current year: Maximum discharge, 38 ft^3/s (1.08 m^3/s) Dec. 3 (gage height, 1.84 ft or 0.561 m); no flow most of year.
Period of record: Maximum discharge, 71 ft^3/s (2.01 m^3/s) Jan. 18, 1973 (gage height, 2.23 ft or 0.680 m), from rating curve extended above 2.2 ft^3/s (0.062 m^3/s) on basis of slope-area measurement of peak flow; no flow most of each year.

REMARKS.--Records poor. No regulation or diversion above station.

DISCHARGE, IN CUBIC FEET PER SECOND, WATER YEAR OCTOBER 1974 TO SEPTEMBER 1975
MEAN VALUES

DAY	OCT	NOV	DEC	JAN	FEB	MAR	APR	MAY	JUN	JUL	AUG	SEP
1	0	0	0		.05	0	0		0			
2	0	0	0		5.0	0	0		0			
3	0	0	6.6		4.0	0	0		0			
4	0	0	1.0		3.0	0	0		0			
5	0	0	0		.50	.35	.10		0			
6	0	0	0		0	.62	.05		0			
7	0	0	0		0	8.0	.02		0			
8	0	0	0		0	2.0	0		0			
9	0	0	0		.44	1.0	0		0			
10	0	0	0		.10	1.5	0		0			
11	0	0	0		0	.60	0		0			
12	0	0	0		0	.44	0		0			
13	0	0	0		.02	.50	0		0			
14	0	0	0		0	.40	0		0			
15	0	0	0		0	.45	0		0			
16	0	0	0		.19	.10	.05		0			
17	1.2	0	0		.05	0	0		0			
18	0	0	0		0	0	0		.30			
19	0	0	0		0	0	0		0			
20	0	0	0		0	0	0		0			
21	0	.14	0		0	0	0		0			
22	0	.09	0		0	.20	0		0			
23	0	0	0		0	.05	0		0			
24	0	0	0		0	0	0		0			
25	0	0	0		0	0	0		0			
26	0	0	0		0	0	0		0			
27	.84	0	.30		0	0	0		0			
28	.10	0	1.2		0	0	0		0			
29	0	0	.10		---	0	0		0			
30	0	0	0		---	0	0		0			
31	0	---	0		---	0	---		---			---
TOTAL	2.14	.23	9.20	0	13.35	16.21	.22	0	.30	0	0	0
MEAN	.069	.008	.30	0	.48	.52	.007	0	.010	0	0	0
MAX	1.2	.14	6.6	0	5.0	8.0	.10	0	.30	0	0	0
MIN	0	0	0	0	0	0	0	0	0	0	0	0
AC-FT	4.2	.5	18	0	26	32	.4	0	.6	0	0	0

CAL YR 1974 TOTAL 137.54 MEAN .38 MAX 72 MIN 0 AC-FT 273
WTR YR 1975 TOTAL 41.65 MEAN .11 MAX 8.0 MIN 0 AC-FT 83

Peak discharge (base, 20 ft^3/s).--Dec. 3 (2200) 38 ft^3/s (1.84 ft); Feb. 2 (1100) 31 ft^3/s (1.77 ft).

11134500 SANTA YNEZ RIVER AT 13TH STREET, NEAR LOMPOC, CALIF.

LOCATION.--Lat 34°40'06", long 120°28'29", in Lompoc Grant, Santa Barbara County, on right bank at 13th Street crossing, 2.3 mi (3.7 km) northwest of Lompoc.

DRAINAGE AREA.--820 mi^2 (2,120 km^2).

PERIOD OF RECORD.--October 1954 to September 1975 (discontinued).

GAGE.--Water-stage recorder. Altitude of gage is 45 ft (14 m), from topographic map. Prior to Oct. 1, 1966, at various sites within 300 ft (91 m) at different datums.

EXTREMES.--Current year: Maximum discharge, 6,500 ft^3/s (184 m^3/s) Mar. 7 (gage height, 11.76 ft or 3.584 m), from rating curve extended above 230 ft^3/s (6.51 m^3/s) on basis of runoff comparison with nearby stations; no flow much of year.
Period of record: Maximum discharge, 79,000 ft^3/s (2,240 m^3/s), estimated, Jan. 25, 1969 (gage height, not determined); no flow for several months in each year.

REMARKS.--Records poor. This is a project station. Discharge above wading stages are estimated. Flow regulated by Jameson Lake, Gibraltar Reservoir, and Lake Cachuma (see sta 11121000, 11122000, 11125500). Water diverted out of basin from Jameson Lake, Gibraltar Reservoir, and Lake Cachuma to cities of Montecito, Santa Barbara, and Goleta for municipal supply. Water pumped from wells along bank of river for irrigation in valley upstream.

DISCHARGE, IN CUBIC FEET PER SECOND, WATER YEAR OCTOBER 1974 TO SEPTEMBER 1975
MEAN VALUES

DAY	OCT	NOV	DEC	JAN	FEB	MAR	APR	MAY	JUN	JUL	AUG	SEP
1			0	10	0	22	180	65				
2			0	1.9	506	19	175	58				
3			0	1.0	1010	19	180	50				
4			419	.50	541	18	160	47				
5			171	.30	293	28	140	42				
6			25	.20	173	164	180	39				
7			15	.10	138	2100	390	35				
8			6.0	0	117	3500	310	31				
9			4.0	0	238	1330	260	26				
10			3.0	0	276	980	200	23				
11			2.0	0	205	1850	185	21				
12			1.0	0	137	1100	180	19				
13			.50	0	113	920	170	16				
14			0	0	100	600	195	14				
15			0	0	86	550	170	13				
16			0	0	75	510	140	12				
17			0	0	66	460	180	9.6				
18			0	0	59	380	196	7.0				
19			0	0	54	300	127	5.0				
20			0	0	49	230	112	3.0				
21			0	0	43	250	128	2.0				
22			0	0	37	425	113	1.0				
23			0	0	34	305	107	.50				
24			0	0	33	320	106	.40				
25			0	0	32	360	101	.30				
26			0	0	28	310	94	.20				
27			0	0	26	270	97	.10				
28			86	0	24	240	84	0				
29			70	0	---	230	85	0				
30			58	0	---	210	77	0				
31		---	38	0	---	200	---	0	---			---
TOTAL	0	0	898.50	14.00	4493	18200	4822	540.10	0	0	0	0
MEAN	0	0	29.0	.45	160	587	161	17.4	0	0	0	0
MAX	0	0	419	10	1010	3500	390	65	0	0	0	0
MIN	0	0	0	0	0	18	77	0	0	0	0	0
AC-FT	0	0	1780	28	8910	36100	9560	1070	0	0	0	0

CAL YR 1974 TOTAL 8984.25 MEAN 24.6 MAX 1270 MIN 0 AC-FT 17820
WTR YR 1975 TOTAL 28967.60 MEAN 79.4 MAX 3500 MIN 0 AC-FT 57460

11134800 MIGUELITO CREEK AT LOMPOC, CALIF.

LOCATION.--Lat 34°37'57", long 120°27'51", in Lompoc Grant, Santa Barbara County, on right bank at upstream end of debris dam, and 1,500 ft (457 m) south of Lompoc Union High School.

DRAINAGE AREA.--11.6 mi^2 (30.0 km^2).

PERIOD OF RECORD.--October 1970 to current year.

GAGE.--Water-stage recorder and concrete control. Datum of gage is 97.94 ft (29.852 m) above mean sea level (Santa Barbara County bench mark).

AVERAGE DISCHARGE.--5 years, 1.24 ft^3/s (0.0351 m^3/s), 898 acre-ft/yr (1.11 hm^3/yr).

EXTREMES.--Current year: Maximum discharge, 501 ft^3/s (14.2 m^3/s) Feb. 2 (gage height, 5.34 ft or 1.628 m), from rating curve extended as explained below; minimum daily, 0.09 ft^3/s (0.003 m^3/s) Nov. 23.
Period of record: Maximum discharge, 501 ft^3/s (14.2 m^3/s) Feb. 2, 1975 (gage height, 5.34 ft or 1.628 m), from rating curve extended above 144 ft^3/s (4.08 m^3/s) on basis of slope-area measurement at gage height 5.02 ft (1.530 m); no flow many days in most years.
Flood of Jan. 25, 1969, reached a stage of 5.83 ft (1.777 m), from floodmark (discharge, 680 ft^3/s or 19.3 m^3/s).

REMARKS.--Records fair. No regulation or diversion above station; some pumping from wells along stream for irrigation.

DISCHARGE, IN CUBIC FEET PER SECOND, WATER YEAR OCTOBER 1974 TO SEPTEMBER 1975
MEAN VALUES

DAY	OCT	NOV	DEC	JAN	FEB	MAR	APR	MAY	JUN	JUL	AUG	SEP
1	.16	.18	.15	.30	.98	1.3	2.8	1.9	1.4	.57	.49	.45
2	.18	.16	.17	.24	52	1.3	2.7	1.9	1.4	.58	.67	.37
3	.17	.17	65	.24	5.3	1.4	2.6	1.9	1.3	.57	.81	.30
4	.18	.17	20	.24	2.6	1.3	2.3	2.1	1.3	.61	.67	.30
5	.18	.16	.64	.18	2.2	2.3	2.9	2.0	1.3	.69	.54	.24
6	.18	.13	.38	.24	2.0	2.4	3.9	1.7	1.2	.93	.45	.24
7	.18	.13	.33	.37	1.7	95	3.7	1.7	1.3	.96	.30	.30
8	.24	.13	.30	.37	1.5	50	3.6	1.7	1.6	.65	.28	.30
9	.18	.13	.26	.24	14	30	2.5	1.7	1.6	.47	.37	.24
10	.18	.13	.25	.24	4.4	40	2.4	1.7	1.3	.48	.59	.24
11	.24	.13	.23	.18	3.5	30	2.3	1.8	1.2	.73	.54	.24
12	.18	.13	.23	.17	2.9	8.0	2.2	1.7	1.2	.64	.46	.24
13	.18	.13	.21	.16	3.2	10	2.2	1.7	1.2	.84	.38	.30
14	.18	.18	.20	.15	2.9	8.0	2.1	1.6	1.3	1.0	.44	.30
15	.18	.18	.19	.15	2.4	7.1	2.1	1.6	1.0	.99	.45	.30
16	.18	.16	.18	.15	2.4	8.5	2.1	1.6	1.0	.92	.54	.30
17	.18	.18	.17	.25	2.2	5.4	2.0	1.6	.99	1.0	.63	.30
18	.24	.18	.17	.75	2.0	5.0	1.9	1.7	.90	.97	.68	.30
19	.24	.18	.17	.75	2.0	5.4	1.8	1.6	1.0	1.1	.52	.30
20	.24	.18	.16	.25	2.0	4.7	1.9	1.6	.89	1.4	.50	.24
21	.24	.30	.16	.20	1.8	4.1	1.9	1.4	.90	.98	.50	.37
22	.24	.18	.16	.17	1.6	26	1.7	1.4	1.0	.95	.48	.30
23	.18	.09	.15	.16	1.6	6.0	1.7	1.4	1.0	.71	.44	.30
24	.18	.13	.15	.15	1.4	5.0	1.8	1.4	.82	.64	.62	.30
25	.18	.18	.15	.15	1.4	4.0	2.2	1.4	.80	.41	.44	.24
26	.18	.15	.15	.20	1.3	3.5	2.1	1.5	.76	.44	.44	.24
27	.18	.16	1.5	.25	1.3	3.2	2.1	1.5	.88	.57	.44	.30
28	.97	.16	5.0	.40	1.1	3.2	2.1	1.5	.82	.60	.37	.36
29	.74	.15	2.0	.60	---	3.2	2.0	1.4	.75	.49	.37	.40
30	.13	.14	1.0	.83	---	2.8	2.0	1.4	.66	.37	.37	.37
31	.13	---	.37	.86	---	2.8	---	1.3	---	.49	.45	---
TOTAL	7.22	4.76	100.18	9.59	123.68	380.9	69.6	50.4	32.77	22.75	15.23	8.98
MEAN	.23	.16	3.23	.31	4.42	12.3	2.32	1.63	1.09	.73	.49	.30
MAX	.97	.30	65	.86	52	95	3.9	2.1	1.6	1.4	.81	.45
MIN	.13	.09	.15	.15	.98	1.3	1.7	1.3	.66	.37	.28	.24
AC-FT	14	9.4	199	19	245	756	138	100	65	45	30	18

CAL YR 1974 TOTAL 514.91 MEAN 1.41 MAX 92 MIN 0 AC-FT 1020
WTR YR 1975 TOTAL 826.06 MEAN 2.26 MAX 95 MIN .09 AC-FT 1640

Peak discharge (base, 100 ft^3/s)

Date	Time	G.H.	Discharge	Date	Time	G.H.	Discharge
12-3	2215	4.07	311	3-7	1615	4.45	368
2-2	1145	5.34	501	3-22	0315	3.03	156

11135000 SANTA YNEZ RIVER AT PINE CANYON, NEAR LOMPOC, CALIF.

LOCATION.--Lat 34°40'20", long 120°29'30", in Lompoc Grant, Santa Barbara County, on right bank at Floradale Avenue bridge, 2.1 mi (3.4 km) upstream from Santa Lucia Creek, and 3 mi (5 km) northwest of Lompoc.

DRAINAGE AREA.--844 mi^2 (2,186 km^2).

PERIOD OF RECORD.--May 1941 to October 1946, August 1964 to current year. Monthly discharge only for some periods, published in WSP 1315-B.

GAGE.--Water-stage recorder. Datum of gage is 40.78 ft (12.430 m) above mean sea level. Prior to Aug. 24, 1964, at different datum. Aug. 24, 1964, to Aug. 20, 1970, at datum 0.91 ft (0.277 m) lower.

EXTREMES.--Current year: Maximum discharge, 6,500 ft^3/s (184 m^3/s) Mar. 7 (gage height, 10.80 ft or 3.292 m), from rating curve extended above 3,300 ft^3/s (93.5 m^3/s); no flow Dec. 23-26.
Period of record: Maximum discharge, 78,000 ft^3/s (2,210 m^3/s), estimated, Jan. 25, 1969 (gage height, 24.91 ft or 7.593 m, present datum, from floodmark); no flow at times in some years.

REMARKS.--Records poor. Flow regulated by Jameson Lake, Gibraltar Reservoir, and Lake Cachuma (see sta 11121000, 11122000, 11125500). Water diverted out of basin from Jameson Lake, Gibraltar Reservoir, and Lake Cachuma to cities of Montecito, Santa Barbara, and Goleta for municipal supply. Water pumped from wells along bank for irrigation in valley upstream. Effluent from city of Lompoc contributes to low flow most months.

DISCHARGE, IN CUBIC FEET PER SECOND, WATER YEAR OCTOBER 1974 TO SEPTEMBER 1975
MEAN VALUES

DAY	OCT	NOV	DEC	JAN	FEB	MAR	APR	MAY	JUN	JUL	AUG	SEP
1	1.7	.40	.33	5.0	9.0	28	184	61	2.2	1.4	1.3	1.0
2	1.3	.39	.33	1.0	500	25	178	57	2.1	1.4	1.3	1.3
3	1.1	.38	30	.40	1050	23	182	48	2.1	1.4	1.3	1.0
4	.90	.38	359	.30	530	20	164	45	2.0	1.4	1.3	1.0
5	.80	.38	178	.25	285	28	143	42	2.0	1.4	1.3	1.3
6	.75	.38	20	.20	174	155	177	37	1.9	1.4	1.3	1.3
7	.70	.37	10	.10	140	2100	385	33	1.9	1.4	1.3	1.3
8	.65	.37	4.0	1.4	142	3500	306	30	1.8	1.4	1.3	1.3
9	.60	.37	2.0	.74	239	1470	268	26	1.8	1.4	1.3	1.3
10	.57	.37	1.3	.20	268	920	204	23	1.8	1.4	1.3	1.3
11	.53	.36	1.2	.21	281	2100	180	23	1.8	1.4	1.3	1.3
12	.50	.36	1.1	.07	199	980	176	21	1.7	1.4	1.3	1.4
13	.48	.36	1.0	.07	125	670	166	18	1.7	1.4	1.3	1.4
14	.46	.35	1.1	.14	100	709	190	16	1.7	1.4	1.0	1.4
15	.45	.35	1.1	.09	85	560	167	14	1.7	1.4	1.0	1.4
16	.44	.35	1.2	.26	75	514	146	14	1.6	1.4	1.0	1.4
17	.42	.34	1.4	.43	69	460	170	11	1.6	1.4	1.0	1.4
18	.42	.34	1.7	.53	56	380	228	7.7	1.6	1.4	1.0	1.4
19	.41	.34	2.4	1.1	52	300	139	6.7	1.6	1.4	1.0	1.4
20	.40	.34	1.4	1.3	48	230	121	6.0	1.6	1.4	1.0	1.4
21	.40	.34	.20	.77	45	250	126	5.0	1.6	1.4	1.0	1.4
22	.40	.37	.05	.38	42	400	114	4.3	1.6	1.4	1.0	1.4
23	.40	.34	0	.43	40	340	102	4.0	1.5	1.5	1.0	1.4
24	.40	.33	0	.36	38	349	96	3.5	1.5	1.5	1.0	1.4
25	.40	.33	0	.36	35	359	98	3.2	1.5	1.6	1.2	1.4
26	.40	.33	0	.58	34	312	102	3.0	1.5	1.4	1.2	1.4
27	.40	.33	1.0	.74	33	272	96	2.8	1.5	1.4	1.2	1.4
28	.45	.33	64	.65	31	243	90	2.6	1.5	1.3	1.3	1.4
29	.50	.33	83	.62	---	232	84	2.6	1.5	1.2	1.3	1.4
30	.45	.33	38	.68	---	205	78	2.3	1.5	1.2	1.3	1.4
31	.40	---	15	.89	---	191	---	2.2	---	1.3	1.0	---
TOTAL	18.18	10.64	819.81	20.25	4725.0	18325	4860	574.9	51.4	43.2	36.4	40.0
MEAN	.59	.35	26.4	.65	169	591	162	18.5	1.71	1.39	1.17	1.33
MAX	1.7	.40	359	5.0	1050	3500	385	61	2.2	1.6	1.3	1.4
MIN	.40	.33	0	.07	9.0	20	78	2.2	1.5	1.2	1.0	1.0
AC-FT	36	21	1630	40	9370	36350	9640	1140	102	86	72	79

CAL YR 1974 TOTAL 12661.63 MEAN 34.7 MAX 1270 MIN 0 AC-FT 25110
WTR YR 1975 TOTAL 29524.78 MEAN 80.9 MAX 3500 MIN 0 AC-FT 58560

NOTE.--No gage-height record Oct. 2 to Dec. 19, May 30 to July 29.

11135800 SAN ANTONIO CREEK AT LOS ALAMOS, CALIF.

LOCATION.--Lat 34°44'36", long 120°16'12", in Los Alamos Grant, Santa Barbara County, on left bank 100 ft (30 m) upstream from northbound lane of Highway 101 at Los Alamos.

DRAINAGE AREA.--34.9 mi^2 (90.4 km^2).

PERIOD OF RECORD.--October 1970 to current year.

GAGE.--Water-stage recorder. Altitude of gage is 580 ft (177 m), from topographic map.

AVERAGE DISCHARGE.--5 years, 0.33 ft^3/s (0.0093 m^3/s), 239 acre-ft/yr (295,000 m^3/yr).

EXTREMES.--Current year: Maximum discharge, 78 ft^3/s (2.21 m^3/s) Feb. 2 (gage height, 2.46 ft or 0.750 m); no flow most of year.
Period of record: Maximum discharge, 233 ft^3/s (6.60 m^3/s) Jan. 18, 1973 (gage height, 3.60 ft or 1.097 m), from rating curve extended above 3 ft^3/s (0.085 m^3/s) on basis of slope-area measurements at gage heights, 2.16 ft (0.658 m) and 3.60 ft (1.097 m); no flow most of each year.

REMARKS.--Records good. No regulation above station. Pumping for irrigation of about 1,000 acres (4.05 km^2) above station.

DISCHARGE, IN CUBIC FEET PER SECOND, WATER YEAR OCTOBER 1974 TO SEPTEMBER 1975
MEAN VALUES

DAY	OCT	NOV	DEC	JAN	FEB	MAR	APR	MAY	JUN	JUL	AUG	SEP
1		0	0	.05	.29	.38	.23	.14				
2		0	.09	.05	12	.24	.21	.12				
3		0	1.5	.07	1.8	.24	.19	.11				
4		0	3.5	.05	1.8	.17	.14	.11				
5		0	.29	.07	1.4	.57	.24	.08				
6		0	.17	.06	.97	1.6	.32	.03				
7		0	.09	.07	.97	12	.30	.01				
8		0	.05	.08	.97	15	.25	.03				
9		0	.02	.09	1.1	4.8	.23	.07				
10		0	.02	.07	1.2	7.7	.16	.13				
11		0	.02	.07	.91	9.2	.23	.15				
12		0	.02	.09	.88	4.4	.23	.10				
13		0	.02	.07	.79	2.8	.22	.07				
14		0	.01	.10	.71	4.6	.22	.01				
15		0	.01	.11	.47	2.2	.22	.18				
16		.11	.02	.12	.57	1.9	.21	.23				
17		.17	.09	.07	.50	1.4	.15	.16				
18		.01	.09	.10	.44	1.3	.19	.16				
19		.05	.09	.13	.40	1.2	.18	.17				
20		.04	.09	.13	.33	.90	.14	.19				
21		0	.09	.17	.32	.71	.14	.13				
22		.06	.09	.17	.32	1.1	.14	.17				
23		.01	.11	.18	.29	.58	.14	.19				
24		0	.11	.19	.25	.37	.12	.18				
25		.03	.17	.22	.24	.34	.14	.14				
26		0	.23	.24	.17	.30	.13	0				
27		0	.28	.21	.17	.28	.11	0				
28		.07	2.4	.19	.24	.28	.10	0				
29		.05	.88	.21	---	.25	.05	0				
30		.09	.17	.24	---	.26	.11	0				
31		---	.14	.24	---	.21	---	0	---			---
TOTAL	0	.69	10.86	3.91	30.50	77.28	5.44	3.06	0	0	0	0
MEAN	0	.023	.35	.13	1.09	2.49	.18	.099	0	0	0	0
MAX	0	.17	3.5	.24	12	15	.32	.23	0	0	0	0
MIN	0	0	0	.05	.17	.17	.05	0	0	0	0	0
AC-FT	0	1.4	22	7.8	60	153	11	6.1	0	0	0	0

CAL YR 1974 TOTAL 81.73 MEAN .22 MAX 12 MIN 0 AC-FT 162
WTR YR 1975 TOTAL 131.74 MEAN .36 MAX 15 MIN 0 AC-FT 261

Peak discharge (base, 30 ft^3/s).--Feb. 2 (1345) 78 ft^3/s (2.46 ft); Mar. 7 (2000) 38 ft^3/s (2.09 ft).

11136100 SAN ANTONIO CREEK NEAR CASMALIA, CALIF.

LOCATION.--Lat 34°46'56", long 120°31'47", in Jesus Maria Grant, Santa Barbara County, on Vandenberg Military Reservation on downstream side of left center pile bent of San Antonio Road bridge, 0.7 mi (1.1 km) east of junction of San Antonio Road and Lompoc-Casmalia Road, and 3.8 mi (6.1 km) south of Casmalia.

DRAINAGE AREA.--135 mi^2 (350 km^2).

PERIOD OF RECORD.--October 1955 to current year.

GAGE.--Water-stage recorder. Concrete control since August 1970. Altitude of gage is 160 ft (49 m), from topographic map. Prior to June 27, 1958, at datum 2.00 ft (0.610 m) higher.

AVERAGE DISCHARGE.--20 years, 5.30 ft^3/s (0.150 m^3/s), 3,840 acre-ft/yr (4.73 hm^3/yr).

EXTREMES.--Current year: Maximum discharge, 366 ft^3/s (10.4 m^3/s) Feb. 2 (gage height, 7.17 ft or 2.185 m); minimum daily, 0.32 ft^3/s (0.009 m^3/s) Aug. 7.
Period of record: Maximum discharge, 2,300 ft^3/s (65.1 m^3/s) Feb. 25, 1969 (gage height, 11.79 ft or 3.594 m); minimum daily, 0.10 ft^3/s (0.003 m^3/s) June 19, 20, 1957.

REMARKS.--Records good. No regulation above station. Flow affected by pumping from wells along stream for irrigation above station.

DISCHARGE, IN CUBIC FEET PER SECOND, WATER YEAR OCTOBER 1974 TO SEPTEMBER 1975
MEAN VALUES

DAY	OCT	NOV	DEC	JAN	FEB	MAR	APR	MAY	JUN	JUL	AUG	SEP
1	.53	.79	.72	2.0	2.5	2.3	2.5	1.8	1.0	.45	.35	.35
2	.57	.72	.72	1.8	103	2.1	2.3	1.7	.99	.45	.36	.35
3	.51	.64	3.5	1.7	45	2.3	2.4	1.7	.99	.46	.36	.40
4	.54	.62	28	1.6	23	2.3	2.4	1.7	1.0	.45	.36	.40
5	.54	.62	5.7	1.6	23	2.6	2.5	1.7	1.0	.40	.34	.40
6	.51	.61	2.6	1.6	7.4	8.7	5.3	1.6	.96	.41	.33	.41
7	.51	.52	2.0	1.6	4.9	82	4.6	1.6	.94	.47	.32	.40
8	.51	.51	1.7	1.6	4.2	125	3.2	1.6	.95	.40	.35	.42
9	.51	.50	1.5	1.7	10	35	2.8	1.6	1.5	.42	.35	.42
10	.51	.50	1.5	1.6	14	34	2.6	1.5	1.3	.41	.36	.46
11	.50	.45	1.4	1.6	6.9	51	2.6	1.5	1.2	.39	.36	.48
12	.51	.47	1.4	1.5	4.6	20	2.4	1.5	1.3	.38	.36	.48
13	.50	.50	1.3	1.5	4.2	12	2.3	1.5	1.4	.41	.41	.51
14	.50	.49	1.3	1.5	4.3	23	2.2	1.4	1.0	.41	.42	.55
15	.51	.55	1.3	1.5	3.6	11	2.2	1.4	.90	.40	.44	.52
16	.46	.59	1.3	1.6	3.0	8.7	2.2	1.4	.85	.40	.44	.51
17	.46	.63	1.3	1.6	2.7	6.7	2.1	1.3	.82	.41	.44	.50
18	.43	.61	1.3	1.7	2.6	4.6	2.0	1.3	.77	.40	.41	.48
19	.45	.64	1.3	1.7	2.5	4.2	1.9	1.3	.71	.41	.44	.48
20	.47	.59	1.2	1.7	2.5	3.9	2.0	1.2	.68	.41	.42	.47
21	.46	.56	1.2	1.8	2.4	3.5	2.0	1.2	.70	.38	.42	.49
22	.51	.67	1.2	1.7	2.3	15	2.0	1.2	.65	.40	.40	.47
23	.49	.64	1.2	1.7	2.3	7.1	1.9	1.1	.63	.41	.40	.46
24	.46	.57	1.1	1.7	2.3	4.4	1.9	1.1	.57	.39	.37	.44
25	.46	.57	1.1	1.7	2.3	3.8	2.0	1.1	.53	.40	.37	.48
26	.46	.59	1.1	1.9	2.3	3.5	1.9	1.0	.51	.38	.36	.46
27	.46	.62	1.2	1.9	2.3	3.0	1.9	1.0	.50	.38	.36	.51
28	.75	.61	15	1.8	2.3	2.7	2.0	1.1	.50	.39	.36	.52
29	1.1	.61	12	1.8	---	2.5	1.7	1.0	.46	.41	.37	.57
30	1.0	.72	4.1	1.8	---	2.4	1.9	1.0	.47	.38	.34	.57
31	.82	---	2.6	1.7	---	2.5	---	1.0	---	.36	.35	---
TOTAL	17.00	17.71	102.84	52.2	292.4	491.8	71.7	42.1	25.78	12.62	11.72	13.96
MEAN	.55	.59	3.32	1.68	10.4	15.9	2.39	1.36	.86	.41	.38	.47
MAX	1.1	.79	28	2.0	103	125	5.3	1.8	1.5	.47	.44	.57
MIN	.43	.45	.72	1.5	2.3	2.1	1.7	1.0	.46	.36	.32	.35
AC-FT	34	35	204	104	580	975	142	84	51	25	23	28

CAL YR 1974 TOTAL 1433.22 MEAN 3.93 MAX 135 MIN .38 AC-FT 2840
WTR YR 1975 TOTAL 1151.83 MEAN 3.16 MAX 125 MIN .32 AC-FT 2280

Peak discharge (base, 100 ft^3/s).--Feb. 2 (1615) 366 ft^3/s (7.17 ft); Mar. 7 (2300) 330 ft^3/s (7.01 ft).

11136400 WAGON ROAD CREEK NEAR STAUFFER, CALIF.

LOCATION.--Lat 34°42'32", long 119°12'25", in SE¼SE¼SE¼ sec.9, T.7 N., R.22 W., Ventura County, on left bank 50 ft (15 m) downstream from Park Canyon Creek, and 10 mi (16 km) east of Ozena Guard Station.

DRAINAGE AREA.--17.9 mi^2 (46.4 km^2).

PERIOD OF RECORD.--July 1972 to current year.

GAGE.--Water-stage recorder. Altitude of gage is 4,500 ft (1,372 m), from topographic map.

EXTREMES.--Current year: Maximum discharge, 860 ft^3/s (24.4 m^3/s) Dec. 4 (gage height, 5.10 ft or 1.555 m); no flow Oct. 1, 2, July 17 to Sept. 9, Sept. 11-15, 21-30.
Period of record: Maximum discharge, 860 ft^3/s (24.4 m^3/s) Dec. 4, 1974 (gage height, 5.10 ft or 1.555 m); no flow many days in some years.

REMARKS.--Records fair. No diversion or regulation above station.

COOPERATION.--Nineteen discharge measurements furnished by Ventura County Flood Control District.

DISCHARGE, IN CUBIC FEET PER SECOND, WATER YEAR OCTOBER 1974 TO SEPTEMBER 1975
MEAN VALUES

DAY	OCT	NOV	DEC	JAN	FEB	MAR	APR	MAY	JUN	JUL	AUG	SEP
1	0	.14	.04	.03	.05	.20	.83	.26	.10	.02		0
2	0	.12	.04	.02	1.1	.23	.62	.23	.09	.02		0
3	.01	.07	7.1	.01	2.0	.34	.72	.23	.10	.02		0
4	.01	.07	163	.06	2.0	.50	.70	.23	.09	.02		0
5	.01	.07	.59	.05	2.1	27	2.4	.23	.09	.02		0
6	.01	.06	.05	.63	1.3	53	1.7	.23	3.8	.02		0
7	.02	.06	.04	.70	1.3	53	2.3	.23	.05	.02		0
8	.01	.06	.03	.30	1.3	87	2.7	.23	.05	.01		0
9	.01	.07	.03	.28	2.1	15	2.6	.23	.05	.01		0
10	.01	.06	.03	.26	.95	11	2.2	.23	.05	.01		.01
11	.02	.05	.04	.25	.70	24	1.8	.23	.05	.01		0
12	.01	.05	.04	.24	.63	9.5	1.2	.23	.05	.01		0
13	.01	.06	.04	.23	.63	8.1	1.1	.23	.05	.01		0
14	.01	.06	.04	.22	.58	7.2	1.1	.20	.05	.01		0
15	.01	.05	.04	.20	.53	3.6	1.2	.20	.05	.01		0
16	.01	.05	.04	.15	.49	3.1	1.2	.20	.05	.01		.02
17	.01	.05	.04	.15	.46	3.1	1.5	.20	.05	0		.03
18	.01	.06	.04	.10	.42	3.1	1.2	.20	.06	0		.01
19	.01	.04	.05	.08	.39	3.1	1.2	.17	.05	0		.01
20	.01	.04	.04	.06	.39	2.9	1.1	.20	.07	0		.01
21	.01	.05	.04	.06	.34	2.7	1.0	.17	.07	0		0
22	.01	.04	.04	.05	.30	2.9	.97	.14	.06	0		0
23	.01	.03	.05	.06	.26	2.5	.96	.14	.05	0		0
24	.02	.03	.04	.05	.24	2.5	.77	.10	.05	0		0
25	.02	.04	.05	.04	.23	2.7	.64	.10	.04	0		0
26	.02	.04	.06	.04	.19	1.8	.60	.10	.04	0		0
27	.02	.04	.06	.03	.17	1.5	.43	.10	.03	0		0
28	.10	.04	.03	.02	.23	1.2	.36	.10	.03	0		0
29	.30	.04	.04	.03	---	1.0	.30	.10	.03	0		0
30	.10	.04	.03	.04	---	1.0	.36	.10	.02	0		0
31	.09	---	.03	.04	---	.98	---	.10	---	0		---
TOTAL	.90	1.68	171.83	4.48	21.38	335.75	35.76	5.64	5.42	.23	0	.09
MEAN	.029	.056	5.54	.14	.76	10.8	1.19	.18	.18	.007	0	.003
MAX	.30	.14	163	.70	2.1	87	2.7	.26	3.8	.02	0	.03
MIN	0	.03	.03	.01	.05	.20	.30	.10	.02	0	0	0
AC-FT	1.8	3.3	341	8.9	42	666	71	11	11	.5	0	.2

CAL YR 1974 TOTAL 905.04 MEAN 2.48 MAX 163 MIN 0 AC-FT 1800
WTR YR 1975 TOTAL 583.16 MEAN 1.60 MAX 163 MIN 0 AC-FT 1160

Peak discharge (base, 50 ft^3/s)

Date	Time	G.H.	Discharge	Date	Time	G.H.	Discharge
12-4	0115	5.10	860	3-8	0545	3.37	152
3-6	1315	3.12	110	6-6	1430	3.78	112

11136480 REYES CREEK NEAR VENTUCOPA, CALIF.

LOCATION.--Lat 34°41'39", long 119°19'02", in SW¼NE¼SE¼ sec.21, T.7 N., R.23 W., Ventura County, on left bank 1,900 ft (579 m) upstream from mouth, and 3 mi (5 km) east of Ozena Guard Station.

DRAINAGE AREA.--4.62 mi^2 (11.97 km^2).

PERIOD OF RECORD.--July 1972 to current year.

GAGE.--Water-stage recorder. Altitude of gage is 3,690 ft (1,120 m), from topographic map.

EXTREMES.--Current year: Maximum discharge, 75 ft^3/s (2.12 m^3/s) Mar. 8 (gage height, 2.69 ft or 0.820 m); minimum daily, 0.07 ft^3/s (0.002 m^3/s) Oct. 1.
Period of record: Maximum discharge, 138 ft^3/s (3.91 m^3/s) Feb. 11, 1973 (gage height, 3.20 ft or 0.975 m); no flow Oct. 1, 1972, Aug. 20, 1973.

REMARKS.--Records good except those for periods of no gage-height record, which are fair. Slight diversion upstream for domestic use.

COOPERATION.--Fourteen discharge measurements furnished by Ventura County Flood Control District.

DISCHARGE, IN CUBIC FEET PER SECOND, WATER YEAR OCTOBER 1974 TO SEPTEMBER 1975
MEAN VALUES

DAY	OCT	NOV	DEC	JAN	FEB	MAR	APR	MAY	JUN	JUL	AUG	SEP
1	.07	.71	.62	1.2	1.3	1.8	3.1	3.9	2.5	1.4	.51	.11
2	.09	.62	.62	1.2	1.6	1.8	2.9	4.4	2.4	1.5	.44	.09
3	.11	.58	1.4	1.2	1.9	1.8	3.0	4.8	2.4	1.4	.38	.08
4	.13	.58	20	1.2	1.6	1.8	3.0	5.1	2.3	1.4	.38	.08
5	.15	.58	3.4	1.2	1.6	5.6	3.2	5.0	2.3	1.3	.34	.09
6	.14	.62	2.2	1.2	1.6	15	3.1	5.2	2.2	1.2	.32	.08
7	.16	.54	1.9	1.4	1.6	39	3.1	5.3	2.1	1.2	.31	.08
8	.20	.50	1.7	1.5	1.6	52	3.1	5.4	1.9	1.2	.27	.18
9	.21	.47	1.6	1.4	4.6	19	3.0	5.5	1.7	1.1	.25	.29
10	.26	.47	1.5	1.4	4.0	13	3.0	5.6	1.5	1.1	.25	.26
11	.26	.44	1.5	1.4	3.0	10	2.8	5.7	1.5	1.0	.24	.26
12	.26	.44	1.5	1.4	2.5	8.5	2.8	5.7	1.4	1.0	.25	.26
13	.26	.41	1.4	1.4	2.3	7.5	2.8	5.8	1.4	.94	.24	.32
14	.29	.40	1.4	1.4	2.6	6.8	3.1	5.8	1.4	.83	.26	.22
15	.28	.38	1.4	1.4	2.6	6.3	3.1	5.4	1.3	.84	.24	.18
16	.30	.37	1.4	1.4	2.3	5.9	2.9	5.2	1.2	.86	.24	.18
17	.28	.38	1.3	1.4	2.0	5.3	2.9	5.0	1.3	.89	.26	.25
18	.24	.38	1.3	1.3	2.0	5.3	2.7	4.7	1.4	.85	.26	.25
19	.18	.40	1.3	1.3	2.0	5.1	2.7	4.5	1.5	.79	.26	.23
20	.24	.41	1.2	1.3	1.9	5.1	2.7	4.3	1.6	.70	.35	.21
21	.20	.41	1.2	1.3	1.9	4.9	2.7	4.1	1.5	.65	.35	.16
22	.24	.43	1.2	1.4	1.9	5.0	3.0	3.9	1.5	.63	.26	.13
23	.24	.49	1.2	1.4	1.9	4.7	3.5	3.7	1.4	.61	.24	.13
24	.38	.56	1.2	1.4	1.9	4.2	3.8	3.6	1.5	.59	.22	.12
25	.41	.59	1.2	1.4	1.9	4.3	4.0	3.5	1.5	.57	.22	.12
26	.41	.58	1.2	1.4	1.8	4.4	4.0	3.3	1.5	.52	.16	.13
27	.44	.58	1.2	1.4	1.8	4.1	3.8	3.2	1.5	.49	.11	.13
28	.54	.58	1.3	1.3	1.8	3.8	3.6	3.1	1.5	.47	.12	.13
29	.81	.58	1.3	1.4	---	3.6	3.6	2.9	1.5	.49	.14	.14
30	.81	.62	1.2	1.3	---	3.6	3.6	2.7	1.5	.50	.16	.14
31	.76	---	1.2	1.3	---	3.5	---	2.6	---	.52	.12	---
TOTAL	9.35	15.10	62.04	41.6	59.5	262.7	94.6	138.9	50.2	27.54	8.15	5.03
MEAN	.30	.50	2.00	1.34	2.13	8.47	3.15	4.48	1.67	.89	.26	.17
MAX	.81	.71	20	1.5	4.6	52	4.0	5.8	2.5	1.5	.51	.32
MIN	.07	.37	.62	1.2	1.3	1.8	2.7	2.6	1.2	.47	.11	.08
AC-FT	19	30	123	83	118	521	188	276	100	55	16	10.0

CAL YR 1974 TOTAL 615.21 MEAN 1.69 MAX 20 MIN .04 AC-FT 1220
WTR YR 1975 TOTAL 774.71 MEAN 2.12 MAX 52 MIN .07 AC-FT 1540

Peak discharge (base, 20 ft^3/s).--Dec. 4 (0445) 63 ft^3/s (2.60 ft); Mar. 8 (0300) 75 ft^3/s (2.69 ft).

NOTE.--No gage-height record May 6 to June 2, June 18 to July 1, Aug. 13 to Sept. 16.

11136800 CUYAMA RIVER BELOW BUCKHORN CANYON, NEAR SANTA MARIA, CALIF.

LOCATION.--Lat 35°01'19", long 120°13'39", in SW¼ sec.14, T.11 N., R.32 W., San Luis Obispo-Santa Barbara County line, on downstream side of second pier from right abutment of bridge on State Highway 166, 0.7 mi (1.1 km) downstream from Buckhorn Canyon, and 13 mi (21 km) northeast of Santa Maria.

DRAINAGE AREA 886 mi² (2,295 km²).

PERIOD OF RECORD. October 1903 to December 1905 (published as Santa Maria River near Santa Maria), October 1959 to current year. Monthly discharge only for October 1903 and July 1904 and yearly estimate for water year 1941 (incomplete), published in WSP 1315-B.

GAGE.--Water-stage recorder. Altitude of gage is 760 ft (232 m), from topographic map. Prior to October 1959, nonrecording gage at different site and datum.

AVERAGE DISCHARGE 18 years, 21.2 ft³/s (0.600 m³/s), 15,360 acre-ft/yr (18.9 hm³/yr).

EXTREMES.--Current year: Maximum discharge, 748 ft³/s (21.2 m³/s) Mar. 8 (gage height, 7.32 ft or 2.231 m), from rating curve extended above 36 ft³/s (1.02 m³/s); minimum daily, 0.22 ft³/s (0.006 m³/s) Sept. 2.
Period of record: Maximum discharge, 17,800 ft³/s (504 m³/s) Feb. 25, 1969 (gage height, 13.70 ft or 4.176 m), from rating curve extended above 4,900 ft³/s (139 m³/s) on basis of slope-area measurement at gage height 10.85 ft (3.307 m); no flow at times in most years.

REMARKS.--Records good. No regulation above station. Pumping from wells along stream for irrigation in Upper Cuyama Valley.

DISCHARGE, IN CUBIC FEET PER SECOND, WATER YEAR OCTOBER 1974 TO SEPTEMBER 1975

DAY	OCT	NOV	DEC	JAN	FEB	MAR	APR	MAY	JUN	JUL	AUG	SEP
1	.27	.49	.29	1.8	.68	.87	1.5	.80	.61	.42	.26	.26
2	.29	.49	.29	1.7	8.8	.87	1.2	.76	.66	.42	.26	.22
3	.31	.43	1.3	1.6	4.5	.87	1.2	.71	.66	.44	.26	.23
4	.38	.43	15	1.5	5.4	.87	1.2	.59	.67	.44	.27	.23
5	.38	.43	132	1.4	3.9	1.1	2.8	.61	.67	.44	.28	.23
6	.37	.43	23	1.3	2.0	1.9	4.9	.62	.67	.44	.25	.23
7	.40	.43	15	1.3	1.7	13	3.4	.58	.67	.44	.25	.25
8	.38	.43	5.0	1.2	1.6	141	2.7	.54	.58	.44	.25	.27
9	.42	.43	3.5	1.1	7.2	267	2.5	.53	.58	.43	.25	.28
10	.40	.38	2.8	.97	25	32	2.3	.53	.58	.38	.27	.29
11	.32	.33	2.2	.87	11	14	2.4	.51	.57	.38	.25	.31
12	.33	.33	2.0	.84	5.3	7.8	2.2	.51	.57	.43	.27	.32
13	.29	.33	1.9	.82	4.5	6.7	1.8	.51	.55	.43	.28	.32
14	.29	.33	1.7	.78	3.6	10	1.9	.44	.53	.43	.29	.29
15	.29	.33	1.7	.70	2.8	5.9	2.0	.43	.53	.38	.26	.29
16	.29	.38	1.6	.70	2.2	5.7	1.9	.43	.53	.38	.27	.31
17	.29	.38	1.5	.65	2.0	4.2	1.7	.44	.51	.33	.28	.30
18	.29	.38	1.4	.62	1.7	3.4	1.7	.44	.50	.38	.29	.30
19	.33	.33	1.4	.55	1.6	2.8	1.5	.48	.54	.38	.30	.31
20	.33	.33	1.4	.55	1.5	2.6	1.4	.48	.51	.38	.27	.32
21	.38	.43	1.3	.55	1.4	2.2	1.4	.48	.52	.33	.28	.34
22	.38	.43	1.3	.55	1.3	5.0	1.4	.48	.52	.33	.27	.34
23	.39	.38	1.3	.50	1.2	3.1	1.4	.50	.53	.33	.27	.33
24	.42	.33	1.3	.50	1.2	2.6	1.3	.45	.53	.29	.26	.33
25	.43	.33	1.2	.49	1.1	2.4	1.6	.46	.53	.29	.23	.28
26	.43	.33	1.2	.49	1.1	2.2	1.3	.47	.50	.29	.24	.28
27	.38	.29	1.2	.43	.97	1.7	1.1	.47	.46	.29	.26	.28
28	.79	.25	3.0	.43	.97	1.7	.93	.49	.39	.29	.26	.27
29	.73	.25	2.0	.44	------	1.5	.82	.51	.41	.30	.25	.27
30	.49	.29	1.9	.45	------	1.4	.81	.53	.41	.30	.25	.27
31	.49	------	1.8	.55	------	1.4	------	.57	------	.30	.25	------
TOTAL	11.96	11.13	232.48	26.33	106.22	547.78	54.26	16.35	16.51	11.53	8.18	8.55
MEAN	.39	.37	7.50	.85	3.79	17.7	1.81	.53	.55	.37	.26	.29
MAX	.79	.49	132	1.8	25	267	4.9	.80	.68	.44	.30	.34
MIN	.27	.25	.29	.43	.68	.87	.81	.43	.39	.29	.23	.22
AC-FT	24	22	461	52	211	1,090	108	32	33	23	16	17

CAL YR 1974 TOTAL 2,092.23 MEAN 5.73 MAX 132 MIN .05 AC-FT 4,150
WTR YR 1975 TOTAL 1,051.28 MEAN 2.88 MAX 267 MIN .22 AC-FT 2,090

Peak discharge (base, 200 ft³/s).--Dec. 5 (0245) 413 ft³/s (7.01 ft); Mar. 8 (2400) 748 ft³/s (7.32 ft).

11137400 ALAMO CREEK NEAR NIPOMO, CALIF.

LOCATION.--Lat 35°02'55", long 120°18'05", in Huasna Grant, San Luis Obispo County, on right bank 3.2 mi (5.1 km) upstream from mouth, and 10 mi (16 km) east of Nipomo.

DRAINAGE AREA.--83.3 mi^2 (215.7 km^2).

PERIOD OF RECORD.--March 1959 to current year.

GAGE.--Water-stage recorder. Altitude of gage is 650 ft (198 m), from topographic map. Prior to Oct. 1, 1966, at datum 2.00 ft (0.610 m) higher.

AVERAGE DISCHARGE.--16 years, 8.03 ft^3/s (0.227 m^3/s), 5,820 acre-ft/yr (7.18 hm^3/yr).

EXTREMES.--Current year: Maximum discharge, 7.5 ft^3/s (0.21 m^3/s) Feb. 10 (gage height, 3.94 ft or 1.201 m); no flow most of year.
Period of record: Maximum discharge, 9,020 ft^3/s (255 m^3/s) Jan. 25, 1969 (gage height, 10.51 ft or 3.203 m), from rating curve extended above 3,100 ft^3/s (87.8 m^3/s) on basis of slope-area measurement at gage height 10.30 ft (3.139 m); no flow for all or part of each year.

REMARKS.--Records poor. No regulation or diversion above station.

DISCHARGE, IN CUBIC FEET PER SECOND, WATER YEAR OCTOBER 1974 TO SEPTEMBER 1975
MEAN VALUES

DAY	OCT	NOV	DEC	JAN	FEB	MAR	APR	MAY	JUN	JUL	AUG	SEP
1			0		0	0						
2			0		0	0						
3			0		0	0						
4			.30		0	0						
5			0		0	0						
6			0		0	0						
7			0		0	.11						
8			0		0	0						
9			0		0	0						
10			0		.01	.11						
11			0		.46	0						
12			0		0	0						
13			0		0	.03						
14			0		0	0						
15			0		0	0						
16			0		0	0						
17			0		0	0						
18			0		0	0						
19			0		0	0						
20			0		0	0						
21			0		0	0						
22			0		0	.16						
23			0		0	0						
24			0		0	0						
25			0		0	0						
26			0		0	0						
27			0		0	0						
28			0		0	0						
29			0		---	0						
30			0		---	0						
31		---	0		---	0	---		---			---
TOTAL	0	0	.30	0	.47	.41	0	0	0	0	0	0
MEAN	0	0	.010	0	.017	.013	0	0	0	0	0	0
MAX	0	0	.30	0	.46	.16	0	0	0	0	0	0
MIN	0	0	0	0	0	0	0	0	0	0	0	0
AC-FT	0	0	.6	0	.9	.8	0	0	0	0	0	0

CAL YR 1974	TOTAL	2201.41	MEAN 6.03	MAX	227	MIN 0	AC-FT	4370
WTR YR 1975	TOTAL	1.18	MEAN .00	MAX	.46	MIN 0	AC-FT	2

Peak discharge (base, 50 ft^3/s). No peak above base.

11137900 HUASNA RIVER NEAR ARROYO GRANDE, CALIF.

LOCATION.--Lat 35°04'40", long 120°22'15", in Huasna Grant, San Luis Obispo County, on right bank 300 ft (91 m) downstream from Huasna Creek, and 12 mi (19 km) southeast of Arroyo Grande.

DRAINAGE AREA.--103 mi^2 (267 km^2).

PERIOD OF RECORD.--June 1959 to current year.

GAGE.--Water-stage recorder. Altitude of gage is 640 ft (195 m), from topographic map.

AVERAGE DISCHARGE.--16 years, 18.2 ft^3/s (0.515 m^3/s), 13,190 acre-ft/yr (16.3 hm^3/yr).

EXTREMES.--Current year: Maximum discharge, 48 ft^3/s (1.36 m^3/s) Mar. 7 (gage height, 3.12 ft or 0.951 m); minimum daily, 0.25 ft^3/s (0.007 m^3/s) Sept. 24.
Period of record: Maximum discharge, 21,000 ft^3/s (595 m^3/s) Jan. 25, 1969 (gage height, 15.90 ft or 4.846 m), from rating curve extended above 1,300 ft^3/s (36.8 m^3/s) on basis of slope-area measurement of maximum flow; no flow many days in most years.

REMARKS.--Records fair. No regulation above station. Some diversions by pumping for irrigation above station.

DISCHARGE, IN CUBIC FEET PER SECOND, WATER YEAR OCTOBER 1974 TO SEPTEMBER 1975
MEAN VALUES

DAY	OCT	NOV	DEC	JAN	FEB	MAR	APR	MAY	JUN	JUL	AUG	SEP
1	.84	.74	.40	.43	.95	2.0	7.7	4.3	1.6	1.5	.43	.33
2	.73	.74	.40	.43	8.1	2.0	6.6	4.3	1.5	1.5	.35	.33
3	.86	.69	.40	.43	1.3	2.0	5.9	4.3	1.5	1.5	.48	.34
4	.95	.63	.40	.43	1.6	2.0	5.6	4.3	1.5	1.5	.55	.53
5	.95	.60	.40	.43	1.1	2.2	9.7	4.1	1.6	1.6	.55	.51
6	.95	.60	.40	.43	1.0	3.0	17	3.3	1.8	2.0	.61	.60
7	.95	.64	.40	.43	1.0	7.2	18	3.0	1.5	2.0	1.1	.70
8	.95	.64	.40	.43	.90	22	16	2.8	1.8	1.5	.76	.56
9	1.1	.64	.40	.43	2.6	21	13	2.6	2.2	1.1	.63	.55
10	1.1	.64	.40	.55	6.1	19	11	2.6	2.0	.83	.49	.46
11	1.1	.64	.40	.55	2.6	25	9.9	2.4	2.2	.80	.49	.37
12	1.1	.64	.40	.56	2.0	20	9.0	2.4	1.8	.64	.44	.41
13	1.1	.64	.40	.63	2.4	17	7.7	2.4	1.8	.73	.30	.82
14	1.2	.64	.40	.55	3.5	23	7.3	2.2	1.6	.84	.33	.75
15	1.1	.64	.40	.64	2.8	20	7.0	2.0	1.2	1.6	.47	.57
16	1.1	.64	.40	.64	2.6	17	7.0	1.8	1.8	.64	.40	.72
17	.45	.64	.40	.73	2.4	15	6.6	2.0	2.2	.95	.33	.62
18	.40	.64	.40	.64	2.2	12	6.2	1.8	2.0	1.5	.35	.58
19	.40	.40	.40	.46	2.2	11	5.9	1.6	1.6	1.5	.49	.47
20	.84	.40	.40	.55	2.2	9.4	5.6	1.6	1.5	1.2	.79	.62
21	.95	.40	.40	.46	2.2	8.1	5.2	1.6	.95	1.2	.40	1.6
22	1.1	.40	.40	.39	2.2	15	4.9	1.3	.73	.84	.51	.72
23	.73	.40	.40	.46	2.2	36	4.9	2.0	.84	.64	.54	.30
24	.46	.40	.40	.46	2.2	24	4.6	2.2	1.5	1.3	.42	.25
25	.46	.40	.40	.46	2.2	20	4.6	2.4	.84	.74	.57	.37
26	.46	.40	.40	.73	2.0	18	4.6	2.4	1.3	.43	.70	1.1
27	.41	.40	.40	.73	2.0	13	4.6	2.0	1.5	.47	.67	.44
28	.41	.40	1.5	.84	2.0	11	4.5	1.5	1.6	.58	.73	.29
29	.53	.40	.95	.84	---	9.4	4.5	1.5	1.6	.47	.55	.43
30	.64	.40	.43	.84	---	8.6	4.5	1.3	2.0	.39	.46	.42
31	.69	---	.43	.84	---	8.1	---	1.6	---	.60	.36	---
TOTAL	25.01	16.48	14.11	17.42	66.55	423.0	229.6	75.6	47.56	33.09	16.25	16.76
MEAN	.81	.55	.46	.56	2.38	13.6	7.65	2.44	1.59	1.07	.52	.56
MAX	1.2	.74	1.5	.84	8.1	36	18	4.3	2.2	2.0	1.1	1.6
MIN	.40	.40	.40	.39	.90	2.0	4.5	1.3	.73	.39	.30	.25
AC-FT	50	33	28	35	132	839	455	150	94	66	32	33

CAL YR 1974 TOTAL 4090.24 MEAN 11.2 MAX 491 MIN .03 AC-FT 8110
WTR YR 1975 TOTAL 981.43 MEAN 2.69 MAX 36 MIN .25 AC-FT 1950

Peak discharge (base, 40 ft^3/s).--Mar. 7 (2230) 48 ft^3/s (3.12 ft); Mar. 23 (0300) 44 ft^3/s (3.06 ft).

11138100 CUYAMA RIVER BELOW TWITCHELL DAM, CALIF.

LOCATION.--Lat 34°56'40", long 120°17'30", in Suey Grant, Santa Barbara County, on left bank 3.5 mi (5.6 km) upstream from mouth, 4 mi (6 km) northeast of Garey, and 4.4 mi (7.1 km) downstream from Twitchell Dam.

DRAINAGE AREA.--1,132 mi^2 (2,932 km^2).

PERIOD OF RECORD.--October 1958 to current year.

GAGE.--Water-stage recorder. Datum of gage is 401.94 ft (122.511 m) above mean sea level (Bureau of Reclamation bench mark).

EXTREMES.--Current year: Maximum discharge, 169 ft^3/s (4.79 m^3/s) May 3 (gage height, 3.56 ft or 1.085 m); no flow for several months.
Period of record: Maximum discharge, 9,100 ft^3/s (258 m^3/s) June 13, 1973 (gage height, 8.22 ft or 2.505 m), result of sluicing at dam; no flow at times in each year.

REMARKS.--Records good. Flow regulated since February 1959 by Twitchell Reservoir, capacity 240,000 acre-ft (296 hm^3). Controlled releases are for ground-water recharge in Santa Maria Valley. Some pumping from wells along stream for irrigation above station.

DISCHARGE, IN CUBIC FEET PER SECOND, WATER YEAR OCTOBER 1974 TO SEPTEMBER 1975

DAY	OCT	NOV	DEC	JAN	FEB	MAR	APR	MAY	JUN	JUL	AUG	SEP
1			0	1.6	1.1	1.1	2.0	158	.75	.06		
2			0	1.4	3.9	1.1	1.6	161	.93	.05		
3			2.2	1.2	3.6	1.1	1.3	161	.99	.04		
4			11	1.2	3.2	1.1	1.1	161	.95	.04		
5			2.9	1.1	3.6	1.3	2.1	161	.80	.04		
6			1.7	1.1	2.4	1.4	3.4	158	.64	.04		
7			1.2	1.1	1.8	2.2	3.5	157	.62	.03		
8			1.1	1.6	1.8	3.6	2.6	155	.58	.03		
9			1.1	1.3	3.6	1.8	2.1	152	.77	0		
10			1.2	1.2	4.4	2.6	2.0	149	.78	0		
11			1.1	1.1	3.6	3.6	1.5	146	.74	0		
12			1.1	1.0	2.6	2.4	1.4	143	.73	0		
13			1.2	1.1	2.6	2.0	1.4	140	.72	0		
14			1.2	1.1	2.2	2.0	1.4	138	.71	0		
15			.98	.87	2.0	1.8	1.4	135	.67	0		
16			1.2	.95	2.0	1.8	1.5	122	.59	0		
17			1.2	.91	1.8	1.8	1.3	41	.59	0		
18			1.2	1.1	1.4	1.3	1.1	12	.61	0		
19			1.1	1.0	1.4	1.0	1.1	6.7	.63	0		
20			.98	.94	1.5	.86	1.2	4.7	.59	0		
21			.98	.99	1.3	.80	1.2	3.9	.41	0		
22			.98	.87	1.1	1.6	1.2	2.6	.35	0		
23			.78	.86	.98	2.0	1.1	2.4	.35	0		
24			.98	.85	1.1	1.7	1.2	2.2	.25	0		
25			.78	1.0	1.3	1.9	1.4	2.2	.16	0		
26			.88	.98	1.1	1.8	1.2	1.9	.12	0		
27			1.1	.98	1.3	1.8	1.0	2.0	.12	0		
28			5.1	.97	.98	1.7	.78	1.8	.09	0		
29			3.6	.97	------	1.6	37	1.5	.07	0		
30			2.0	.98	------	1.7	152	1.1	.08	0		
31		------	1.8	.88	------	2.0	------	.87	------	0		------
TOTAL	0	0	52.64	33.20	59.66	54.46	233.08	2,483.87	16.39	.33	0	0
MEAN	0	0	1.70	1.07	2.13	1.76	7.77	80.1	.55	.011	0	0
MAX	0	0	11	1.6	4.4	3.6	152	161	.99	.06	0	0
MIN	0	0	0	.85	.98	.80	.78	.87	.07	0	0	0
AC-FT	0	0	104	66	118	108	462	4,930	33	.7	0	0

CAL YR 1974 TOTAL 13,689.60 MEAN 37.5 MAX 167 MIN 0 AC-FT 27,150
WTR YR 1975 TOTAL 2,933.63 MEAN 8.04 MAX 161 MIN 0 AC-FT 5,820

11138100 CUYAMA RIVER BELOW TWITCHELL DAM, CALIF.--Continued

PERIOD OF RECORD.--Chemical analyses: Water years 1967-71, 1973 to current year (partial-record station).

WATER QUALITY DATA, WATER YEAR OCTOBER 1974 TO SEPTEMBER 1975

DATE	TIME	INSTANTANEOUS DISCHARGE (CFS)	DISSOLVED IRON (FE) (UG/L)	DISSOLVED CALCIUM (CA) (MG/L)	DISSOLVED MAGNESIUM (MG) (MG/L)	DISSOLVED SODIUM (NA) (MG/L)	DISSOLVED POTASSIUM (K) (MG/L)	BICARBONATE (HCO3) (MG/L)	CARBONATE (CO3) (MG/L)	ALKALINITY AS CACO3 (MG/L)	DISSOLVED SULFATE (SO4) (MG/L)
JAN.											
28...	1335	.80	--	179	89	126	2.3	341	0	280	648
APR.											
21...	1215	1.1	--	177	88	137	4.3	312	0	256	675
MAY											
20...	1500	4.1	10	--	--	--	--	--	--	--	--

DATE	DISSOLVED CHLORIDE (CL) (MG/L)	DISSOLVED FLUORIDE (F) (MG/L)	TOTAL NITRATE (N) (MG/L)	DISSOLVED SOLIDS (RESIDUE AT 180 C) (MG/L)	DISSOLVED SOLIDS (TONS PER AC-FT)	HARDNESS (CA,MG) (MG/L)	NONCARBONATE HARDNESS (MG/L)	PERCENT SODIUM	SODIUM ADSORPTION RATIO	SPECIFIC CONDUCTANCE (MICROMHOS)	PH (UNITS)
JAN.											
28...	93	1.3	.11	1346	1.83	812	530	25	1.9	1868	--
APR.											
21...	98	.9	.00	1493	2.03	805	550	27	2.1	1600	8.2
MAY											
20...	--	--	--	--	--	--	--	--	--	--	--

DATE	TEMPERATURE (DEG C)	TURBIDITY (JTU)	DISSOLVED OXYGEN (MG/L)	DISSOLVED ARSENIC (AS) (UG/L)	DISSOLVED BORON (B) (UG/L)	DISSOLVED CADMIUM (CD) (UG/L)	DISSOLVED COPPER (CU) (UG/L)	DISSOLVED LEAD (PB) (UG/L)	TOTAL MERCURY (HG) (UG/L)	DISSOLVED ZINC (ZN) (UG/L)
JAN.										
28...	10.5	--	--	--	370	--	--	--	--	--
APR.										
21...	22.0	3	15.7	--	460	--	--	--	--	--
MAY										
20...	22.0	--	--	0	--	0	0	0	.1	0

11138500 SISQUOC RIVER NEAR SISQUOC, CALIF.

LOCATION.--Lat 34°50'23", long 120°10'02", in Sisquoc Grant, Santa Barbara County, on left bank 2.6 mi (4.2 km) upstream from La Brea Creek, and 7 mi (11 km) east of Sisquoc.

DRAINAGE AREA.--281 mi^2 (728 km^2).

PERIOD OF RECORD.--October 1943 to current year. October 1929 to September 1933, at site 0.2 mi (0.3 km) downstream; low-flow records not equivalent owing to diversion immediately upstream. Monthly discharge only for some periods, published in WSP 1315-B.

GAGE.--Water-stage recorder. Datum of gage is 624.30 ft (190.287 m) above mean sea level (Corps of Engineers bench mark). See WSP 1735 for history of changes prior to Aug. 24, 1951.

AVERAGE DISCHARGE.--32 years, 41.1 ft^3/s (1.164 m^3/s), 29,780 acre-ft/yr (36.7 hm^3/yr).

EXTREMES.--Current year: Maximum discharge, 2,010 ft^3/s (56.9 m^3/s) Mar. 8 (gage height, 5.22 ft or 1.591 m); minimum daily, 0.90 ft^3/s (0.025 m^3/s) Aug. 26-31.

Period of record: Maximum discharge, 23,200 ft^3/s (657 m^3/s) Dec. 6, 1966 (gage height, 15.75 ft or 4.801 m), from rating curve extended above 1,700 ft^3/s (48.1 m^3/s) on basis of slope-area measurements at gage heights 10.08 ft (3.072 m) and 15.75 ft (4.801 m); no flow Nov. 11-18, 1967.

Flood of Mar. 2, 1938, 11,000 ft^3/s (312 m^3/s), gage height, 8.1 ft (2.47 m), from high-water mark in gage well, at site in use 1929-33, from rating curve extended above 2,800 ft^3/s (79.3 m^3/s).

REMARKS.--Records poor. No regulation or diversion above station.

DISCHARGE, IN CUBIC FEET PER SECOND, WATER YEAR OCTOBER 1974 TO SEPTEMBER 1975
MEAN VALUES

DAY	OCT	NOV	DEC	JAN	FEB	MAR	APR	MAY	JUN	JUL	AUG	SEP
1	1.5	1.4	1.3	1.8	41	16	47	38	11	2.9	1.4	1.0
2	1.5	1.4	1.3	1.8	83	16	46	37	10	2.8	1.4	1.0
3	1.4	1.3	30	1.7	172	17	45	37	10	2.7	1.4	1.0
4	1.4	1.3	309	1.7	93	17	44	37	9.6	2.7	1.4	1.0
5	1.5	1.3	62	1.7	82	20	70	37	9.2	2.6	1.4	1.0
6	1.5	1.3	12	1.7	44	314	100	36	8.8	2.6	1.3	1.1
7	1.4	1.3	4.8	1.7	30	754	80	36	8.4	2.4	1.3	1.1
8	1.6	1.3	3.0	1.8	21	1120	60	36	7.9	2.4	1.3	1.1
9	1.5	1.4	2.6	1.7	70	350	53	36	7.5	2.4	1.3	1.1
10	1.4	1.4	2.6	1.8	172	176	52	33	7.1	2.2	1.3	1.1
11	1.5	1.3	2.4	1.8	123	111	51	31	5.9	2.2	1.2	1.2
12	1.5	1.3	2.2	1.8	68	108	50	28	4.8	2.1	1.2	1.2
13	1.5	1.3	2.0	1.8	53	110	70	27	4.8	2.1	1.2	1.2
14	1.5	1.3	2.0	1.8	41	128	86	26	4.5	2.1	1.2	1.2
15	1.5	1.4	2.0	1.8	39	100	82	26	4.2	1.9	1.2	1.2
16	1.5	1.4	2.0	1.8	33	93	68	26	4.8	1.9	1.1	1.3
17	1.4	1.4	2.0	1.8	29	85	54	24	4.8	1.9	1.1	1.3
18	1.4	1.4	2.0	1.8	26	76	49	22	4.5	1.9	1.1	1.3
19	1.4	1.4	2.0	1.8	23	70	47	23	4.5	1.7	1.1	1.3
20	1.4	1.3	2.0	1.8	20	68	44	23	3.7	1.7	1.1	1.3
21	1.4	1.5	2.0	1.8	18	64	44	23	3.7	1.7	1.0	1.4
22	1.4	1.5	2.0	1.8	17	90	43	22	3.7	1.7	1.0	1.4
23	1.4	1.4	2.0	1.8	17	98	43	20	3.5	1.6	1.0	1.4
24	1.4	1.3	2.0	1.8	16	70	43	19	3.5	1.6	1.0	1.4
25	1.4	1.3	2.0	1.8	16	70	43	18	3.4	1.6	1.0	1.4
26	1.4	1.3	2.0	1.9	16	70	42	16	3.3	1.6	.90	1.5
27	1.4	1.3	2.0	1.8	16	60	42	16	3.3	1.5	.90	1.5
28	2.0	1.3	3.0	1.7	16	52	41	14	3.2	1.5	.90	1.5
29	2.4	1.3	2.4	1.6	---	50	41	13	3.2	1.5	.90	1.5
30	1.5	1.3	2.2	4.8	---	49	38	12	3.0	1.5	.90	1.5
31	1.4	---	1.8	26	---	48	---	11	---	1.5	.90	---
TOTAL	46.4	40.4	472.6	82.2	1395	4470	1618	803	169.8	62.5	35.40	37.5
MEAN	1.50	1.35	15.2	2.65	49.8	144	53.9	25.9	5.66	2.02	1.14	1.25
MAX	2.4	1.5	309	26	172	1120	100	38	11	2.9	1.4	1.5
MIN	1.4	1.3	1.3	1.6	16	16	38	11	3.0	1.5	.90	1.0
AC-FT	92	80	937	163	2770	8870	3210	1590	337	124	70	74

CAL YR 1974 TOTAL 10133.20 MEAN 27.8 MAX 1100 MIN 1.3 AC-FT 20100
WTR YR 1975 TOTAL 9232.80 MEAN 25.3 MAX 1120 MIN .90 AC-FT 18310

Peak discharge (base, 100 ft^3/s)

Date	Time	G.H.	Discharge	Date	Time	G.H.	Discharge
12-4	1030	3.93	1,070	3-8	0115	5.22	2,010
2-2	2300	3.24	265	4-6	unknown	2.70	240
2-9	2115	3.32	308				

NOTE.--No gage-height record Mar. 26 to Apr. 29.

11139500 TEPUSQUET CREEK NEAR SISQUOC, CALIF.

LOCATION.--Lat 34°52'21", long 120°14'37", in NE¼ sec.9, T.9 N., R.32 W., Santa Barbara County, on downstream wingwall of right bridge abutment, 1.1 mi (1.8 km) upstream from mouth, and 3 mi (5 km) east of Sisquoc.

DRAINAGE AREA.--28.7 mi^2 (74.3 km^2).

PERIOD OF RECORD.--October 1943 to current year

GAGE Water-stage recorder. Concrete control since July 1957. Altitude of gage is 500 ft (152 m), from topographic map. Prior to Dec. 9, 1948, at datum 0.9 ft (0.27 m) higher.

AVERAGE DISCHARGE.--32 years, 1.55 ft^3/s (0.0439 m^3/s), 1,120 acre-ft/yr (1.38 hm^3/yr).

EXTREMES.- Current year: Maximum discharge, 48 ft^3/s (1.36 m^3/s) Feb. 2 (gage height, 2.81 ft or 0.857 m); minimum daily, 0.06 ft^3/s (0.002 m^3/s) Oct. 17.
Period of record: Maximum discharge, 788 ft^3/s (22.3 m^3/s) Dec. 6, 1966 (gage height, 5.48 ft or 1.670 m), from rating curve extended above 220 ft^3/s (6.23 m^3/s) on basis of computation of maximum flow at contracted opening; no flow at times in some years.

REMARKS. -Records fair. No regulation above station. Some diversion by pumping from wells along stream to irrigate about 100 acres (405,000 m^2) above gage.

DISCHARGE, IN CUBIC FEET PER SECOND, WATER YEAR OCTOBER 1974 TO SEPTEMBER 1975
MEAN VALUES

DAY	OCT	NOV	DEC	JAN	FEB	MAR	APR	MAY	JUN	JUL	AUG	SEP
1	.11	.19	.10	.25	.59	.46	1.0	1.0	1.0	.25	.19	.25
2	.12	.16	.09	.25	5.7	.46	1.1	1.0	1.1	.59	.19	.25
3	.15	.19	3.1	.25	1.1	.44	1.0	1.2	1.2	.59	.19	.25
4	.19	.19	1.9	.25	1.5	.45	1.1	.90	1.2	.59	.19	.25
5	.16	.14	.59	.19	1.0	1.1	1.7	.90	1.2	.59	.19	1.0
6	.13	.09	.45	.25	.90	1.3	2.9	.90	1.5	.74	.19	.61
7	.19	.09	.35	.25	.80	1.9	1.3	.90	1.7	.59	.19	.47
8	.25	.14	.35	.25	.70	1.4	1.5	.74	1.6	.51	.14	.45
9	.25	.14	.45	.23	1.3	1.2	1.3	.74	1.6	.59	.19	.54
10	.19	.09	.45	.22	1.1	1.3	1.3	.74	1.9	.59	.19	.68
11	.21	.09	.35	.18	.74	1.2	1.3	.59	1.6	.59	.19	.72
12	.18	.09	.35	.19	.59	1.1	1.3	.59	1.3	.59	.19	.64
13	.12	.09	.25	.18	.74	1.2	1.3	.74	1.3	.59	.25	.75
14	.09	.09	.27	.22	.59	1.0	1.3	.74	1.6	.59	.25	.59
15	.10	.14	.31	.22	.51	.87	1.3	.74	1.6	.59	.25	.45
16	.09	.14	.35	.22	.43	.96	1.3	.74	1.9	.59	.25	.45
17	.06	.11	.35	.22	.45	.81	1.3	.59	1.3	.59	.25	.35
18	.09	.13	.35	.22	.50	.83	1.3	.59	1.1	.59	.25	.45
19	.14	.10	.35	.21	.51	.85	1.3	.74	1.3	.59	.25	.45
20	.19	.09	.35	.29	.47	.87	1.3	.74	1.1	.59	.25	.35
21	.17	.18	.35	.32	.43	.87	1.3	.74	1.1	.59	.25	.35
22	.19	.16	.35	.30	.47	1.5	1.3	.74	1.1	.59	.25	.35
23	.17	.10	.35	.29	.43	.86	1.3	.74	1.3	.59	.25	.25
24	.19	.09	.35	.32	.45	.90	1.3	.74	1.1	1.6	.19	.25
25	.19	.09	.35	.31	.42	1.2	1.3	.74	1.1	.90	.25	.19
26	.19	.08	.35	.46	.44	1.0	1.3	.74	1.1	.59	.25	.19
27	.19	.08	1.3	.46	.43	1.0	1.3	.74	.90	.53	.25	.19
28	.74	.10	1.6	.45	.44	1.0	1.3	.81	.90	.50	.25	.14
29	.45	.11	.45	.45	---	.87	1.1	.75	.45	.42	.25	.14
30	.19	.11	.35	.59	---	.94	1.0	.88	.59	.24	.25	.14
31	.19	---	.35	.59	---	1.1	---	.97	---	.19	.25	---
TOTAL	5.87	3.59	17.26	9.08	23.73	30.94	39.7	24.41	37.74	18.27	6.92	12.14
MEAN	.19	.12	.56	.29	.85	1.00	1.32	.79	1.26	.59	.22	.40
MAX	.74	.19	3.1	.59	5.7	1.9	2.9	1.2	1.9	1.6	.25	1.0
MIN	.06	.08	.09	.18	.42	.44	1.0	.59	.45	.19	.14	.14
AC-FT	12	7.1	34	18	47	61	79	48	75	36	14	24

CAL YR 1974 TOTAL 762.38 MEAN 2.09 MAX 111 MIN .05 AC-FT 1510
WTR YR 1975 TOTAL 229.65 MEAN .63 MAX 5.7 MIN .06 AC-FT 456

Peak discharge (base, 50 ft^3/s).--No peak above base.

11140000 SISQUOC RIVER NEAR GAREY, CALIF.

LOCATION.--Lat 34°53'38", long 120°18'20", in SW¼ sec.36, T.10 N., R.33 W., Santa Barbara County, on downstream side of county road bridge, 0.6 mi (1.0 km) northeast of Garey, and 3.7 mi (6.0 km) downstream from Tepusquet Creek.

DRAINAGE AREA.--471 mi² (1,220 km²).

PERIOD OF RECORD.--October 1940 to current year. Records for water year 1941 incomplete, yearly estimate and monthly discharge only for October 1940 and January 1941, published in WSP 1315-B.

GAGE.--Water-stage recorder. Datum of gage is 354.8 ft (108.14 m) above mean sea level (Santa Barbara County bench mark). See WSP 1735 for history of changes prior to Oct. 1, 1959. Oct. 1, 1959, to Dec. 30, 1965, at datum 6.00 ft (1.829 m) higher. Since Oct. 1, 1959, supplementary gage near left bank at same datum.

AVERAGE DISCHARGE.--35 years, 39.5 ft³/s (1.119 m³/s), 28,620 acre-ft/yr (35.3 hm³/yr).

EXTREMES.--Current year: Maximum discharge, 2,170 ft³/s (61.5 m³/s) Mar. 8 (gage height, 6.61 ft or 2.015 m); no flow for several months.
Period of record: Maximum discharge, 24,500 ft³/s (694 m³/s) Jan. 25, 1969 (gage height, 13.00 ft or 3.962 m); maximum gage height, 13.50 ft (4.115 m) Dec. 6, 1966; no flow for several months in each year.

REMARKS.--Records fair. No regulation above station. Pumping from wells along stream for irrigation of about 7,000 acres (28.3 km²) above station.

DISCHARGE, IN CUBIC FEET PER SECOND, WATER YEAR OCTOBER 1974 TO SEPTEMBER 1975
MEAN VALUES

DAY	OCT	NOV	DEC	JAN	FEB	MAR	APR	MAY	JUN	JUL	AUG	SEP
1			0		0	0	4.7	3.8	0	0	0	
2			0		28	0	4.7	3.0	0	0	0	
3			6.1		53	0	4.2	2.0	0	0	.01	
4			110		56	0	3.9	1.1	0	0	0	
5			46		49	0	5.1	1.7	0	0	0	
6			1.9		23	125	51	1.3	0	.01	0	
7			0		10	527	49	.30	0	0	0	
8			0		3.1	1160	36	.06	0	0	0	
9			0		5.8	263	32	.04	0	0	0	
10			0		138	200	27	.04	0	0	0	
11			0		93	170	27	0	0	0	0	
12			0		22	85	22	0	0	0	0	
13			0		2.3	50	17	0	0	0	0	
14			0		.09	57	32	0	0	0	0	
15			0		0	30	42	0	0	0	0	
16			0		0	20	41	0	0	0	0	
17			0		0	13	34	0	0	0	0	
18			0		0	4.7	26	0	0	0	0	
19			0		0	1.7	16	0	0	0	0	
20			0		0	.92	12	0	0	0	0	
21			0		0	.92	10	0	0	0	0	
22			0		0	23	13	0	.02	0	0	
23			0		0	44	14	0	.04	0	0	
24			0		0	22	11	0	.02	0	0	
25			0		0	16	11	0	0	0	0	
26			0		0	22	13	0	0	0	0	
27			0		0	14	10	0	0	.02	0	
28			.20		0	8.1	8.7	0	0	0	0	
29			0		---	5.5	7.4	0	0	0	0	
30			0		---	5.1	4.5	0	0	0	0	
31		---	0		---	5.1	---	0	---	0	0	---
TOTAL	0	0	164.20	0	483.29	2873.04	589.2	13.34	.08	.03	.01	0
MEAN	0	0	5.30	0	17.3	92.7	19.6	.43	.003	.001	.0003	0
MAX	0	0	110	0	138	1160	51	3.8	.04	.02	.01	0
MIN	0	0	0	0	0	0	3.9	0	0	0	0	0
AC-FT	0	0	326	0	959	5700	1170	26	.2	.06	.02	0

CAL YR 1974 TOTAL 2994.42 MEAN 8.20 MAX 600 MIN 0 AC-FT 5940
WTR YR 1975 TOTAL 4123.19 MEAN 11.3 MAX 1160 MIN 0 AC-FT 8180

Peak discharge (base, 100 ft³/s)

Date	Time	G.H.	Discharge	Date	Time	G.H.	Discharge
12 4	1815	4.88	472	2-10	0400	4.58	242
2 2	1200	4.58	196	3-8	0215	6.61	2,170

11140600 BRADLEY DITCH NEAR DONOVAN ROAD, AT SANTA MARIA, CALIF.

LOCATION. Lat 34°58'00", long 120°25'00", in NE¼NE¼NE¼ sec.11, T.10 N., R.34 W., Santa Barbara County, on left bank 250 ft (76 m) south of Donovan Road, and 0.2 mi (0.3 km) east of U.S. Highway 101, Santa Maria.

PERIOD OF RECORD.--October 1970 to current year.

GAGE. Water-stage recorder. Concrete-lined channel. Altitude of gage is 225 ft (69 m), from topographic map.

AVERAGE DISCHARGE.--5 years, 0.95 ft^3/s (0.0269 m^3/s), 688 acre-ft/yr (848,000 m^3/yr).

EXTREMES.--Current year: Maximum discharge, 295 ft^3/s (8.35 m^3/s) Dec. 4 (gage height, 5.08 ft or 1.548 m), from rating curve based on computation of flow in concrete-lined channel; no flow Oct. 1, Jan. 28.
Period of record: Maximum discharge, 295 ft^3/s (8.35 m^3/s) Dec. 4, 1974 (gage height, 5.08 ft or 1.548 m), from rating curve based on computation of flow in concrete-lined channel; no flow for several days in each year.

REMARKS. -Records fair. Runoff affected by urbanization.

DISCHARGE, IN CUBIC FEET PER SECOND, WATER YEAR OCTOBER 1974 TO SEPTEMBER 1975
MEAN VALUES

DAY	OCT	NOV	DEC	JAN	FEB	MAR	APR	MAY	JUN	JUL	AUG	SEP
1	0	.03	.04	.07	.38	.05	.01	.21	.70	.71	1.9	.80
2	.04	.01	.02	.02	26	.04	.10	.35	.32	.59	1.6	.33
3	.10	.01	34	.04	1.1	.07	.24	.35	.25	.41	.94	.94
4	.01	.01	58	.10	11	.16	.18	.15	.13	.40	.72	.81
5	.30	.02	4.0	.08	.67	.67	.30	.39	.19	.36	.77	.94
6	.18	.02	2.4	.04	.16	.93	2.6	.30	.22	.58	.76	.43
7	.24	.01	1.6	.11	.07	13	.07	.22	.49	.76	.70	.26
8	.14	.02	1.2	.12	.07	1.9	1.4	.07	.80	.95	.69	.28
9	.21	.18	.93	.07	3.0	.08	.10	.04	.09	1.1	.68	.20
10	.18	.51	.21	.06	7.9	4.6	.02	.06	.79	2.0	.68	.26
11	.27	.46	.02	.04	.38	.86	.02	.08	.51	1.4	.68	.40
12	.12	.56	.10	.06	.07	.08	.16	.05	.75	2.0	.68	.54
13	.02	.56	.10	.07	.67	.73	.10	.24	.38	1.0	.67	.79
14	.07	.46	.10	.23	.06	.42	.02	.24	.69	1.3	.66	.50
15	.10	.46	.10	.25	.02	.06	.06	.43	.33	1.0	.66	.21
16	.14	.38	.10	.08	.02	.46	.12	.29	.53	1.2	.65	.26
17	.04	.51	.10	.20	.01	.06	.21	.05	.55	.67	.64	.43
18	.24	.34	.10	.29	.34	.03	.21	.04	.45	.68	.63	.29
19	.38	.42	.10	.04	.04	.02	.08	.15	.55	.78	.63	.26
20	.06	.34	.10	.20	.04	.01	.08	.21	.57	.69	.62	.34
21	.03	.61	.10	.25	.02	.14	.03	.04	.14	1.0	.62	.26
22	.18	.30	.10	.23	.18	1.3	.21	.10	.24	1.4	.61	.31
23	.18	.38	.10	.20	.06	.04	.24	.05	.30	1.4	.60	.37
24	.14	.34	.10	.29	1.2	.01	.45	.33	1.2	1.3	.60	.62
25	.14	.51	.10	.07	.27	.05	.24	.02	.38	1.5	.59	.43
26	.02	.46	.10	.03	.42	.01	.19	.02	1.2	1.7	1.0	.51
27	.02	.12	.63	.02	.34	.09	.48	.04	.81	.34	1.2	.47
28	7.6	.10	8.7	0	.29	.22	.08	.21	.80	.99	1.7	.09
29	.21	.08	.16	.18	---	.13	.11	.20	.50	1.5	.98	.09
30	.02	.06	.04	.18	---	.02	.16	.26	.63	2.0	.50	.09
31	.02	---	.02	.14	---	.01	---	.51	---	1.7	.51	---
TOTAL	11.40	8.27	113.47	3.76	54.78	26.25	8.27	5.70	15.49	33.41	24.87	12.51
MEAN	.37	.28	3.66	.12	1.96	.85	.28	.18	.52	1.08	.80	.42
MAX	7.6	.61	58	.29	26	13	2.6	.51	1.2	2.0	1.9	.94
MIN	0	.01	.02	0	.01	.01	.01	.02	.09	.34	.50	.09
AC-FT	23	16	225	7.5	109	52	16	11	31	66	49	25

CAL YR 1974 TOTAL 408.98 MEAN 1.12 MAX 58 MIN 0 AC-FT 811
WTR YR 1975 TOTAL 318.18 MEAN .87 MAX 58 MIN 0 AC-FT 631

Peak discharge (base, 100 ft^3/s). -Dec. 4 (0115) 295 ft^3/s (5.08 ft); Feb. 2 (1130) 101 ft^3/s (3.13 ft).

11140800 BLOSSER DITCH NEAR DONOVAN ROAD, AT SANTA MARIA, CALIF.

LOCATION.--Lat 34°58'44", long 120°27'06", in SW¼NW¼NW¼ sec.3, T.10 N., R.34 W., Santa Barbara County, on right bank 0.8 mi (1.3 km) north of Donovan Road, and 1.0 mi (1.6 km) west of Broadway Boulevard, Santa Maria.

PERIOD OF RECORD.--October 1972 to current year. November 1962 to September 1972 in files of Santa Barbara County Flood Control and Water Conservation District.

GAGE.--Water-stage recorder and culvert control. Altitude of gage is 190 ft (58 m), from topographic map.

EXTREMES.--Current year: Maximum discharge, 207 ft^3/s (5.86 m^3/s) Dec. 3 (gage height, 6.65 ft or 2.027 m); no flow many days.
Period of record: Maximum discharge, 230 ft^3/s (6.51 m^3/s) Jan. 18, 1973 (gage height, 6.88 ft or 2.097 m); no flow many days in each year.

REMARKS.--Records fair. Runoff affected by urbanization.

DISCHARGE, IN CUBIC FEET PER SECOND, WATER YEAR OCTOBER 1974 TO SEPTEMBER 1975
MEAN VALUES

DAY	OCT	NOV	DEC	JAN	FEB	MAR	APR	MAY	JUN	JUL	AUG	SEP
1	.89	0	.21	0	2.9	.47	.67	.24	.17	.19	0	.02
2	.05	0	.07	0	40	.38	.81	.08	.32	0	.06	.25
3	.22	0	32	0	1.4	.34	.47	0	.28	.25	0	.64
4	.01	0	41	0	11	.61	.58	.01	.30	.36	.11	.26
5	.32	0	.19	0	.88	1.4	1.0	.44	.56	.49	.22	.55
6	.03	0	0	0	0	2.0	5.5	.71	.36	.01	.49	1.0
7	.27	0	0	0	0	12	.01	.19	.67	0	1.2	.72
8	.82	0	0	.47	0	2.8	5.8	.73	.05	.11	1.1	.37
9	.78	0	0	.02	1.9	.04	.06	.86	0	.24	.03	.62
10	.66	0	0	.31	1.6	4.1	0	.16	0	.01	0	.89
11	.19	.20	0	.41	.04	.94	0	.20	.02	.02	.19	1.0
12	.27	.21	0	.03	0	.04	0	.34	.44	0	0	1.2
13	0	.46	0	0	1.4	.76	.01	1.3	.64	0	.62	.90
14	.43	.67	.27	.05	.05	.33	0	.03	.02	0	.61	.05
15	0	.72	.36	0	0	0	.81	.48	0	.12	.33	0
16	.28	.01	0	0	0	1.0	.72	.21	.47	.88	.29	0
17	.59	0	0	0	0	.01	.89	.01	1.3	.35	.34	0
18	.23	0	0	.21	0	0	.32	0	.02	.07	.24	.50
19	.06	0	.13	.05	0	0	.18	0	0	.04	.45	.59
20	0	0	.04	.38	.53	0	0	.26	0	0	.65	.28
21	0	.51	.52	.54	1.4	0	.80	.24	.59	.39	1.1	.03
22	0	.18	.23	.32	1.0	4.4	.54	.31	.58	.58	.87	0
23	0	0	0	.31	.37	0	.06	.51	0	.11	.73	.74
24	.22	0	0	.07	.51	.10	.06	.01	.14	0	.23	1.2
25	.38	0	0	.45	.45	.42	.32	.03	.16	.12	.45	1.3
26	.33	0	.46	.42	.93	.40	.25	0	.29	.16	.20	1.3
27	.06	.34	.56	.78	1.3	.55	.09	0	.48	.01	.51	1.6
28	9.3	0	5.0	.72	1.7	.76	0	0	.45	.29	.91	.81
29	1.3	0	0	1.1	---	.63	0	0	.01	.60	.95	0
30	0	.15	0	.60	---	.51	.04	.22	.07	.33	.43	0
31	0	---	0	.07	---	.48	---	.59	---	0	.43	---
TOTAL	17.69	3.45	81.04	7.31	69.36	35.47	19.99	8.16	8.39	5.73	13.74	16.82
MEAN	.57	.12	2.61	.24	2.48	1.14	.67	.26	.28	.18	.44	.56
MAX	9.3	.72	41	1.1	40	12	5.8	1.3	1.3	.88	1.2	1.6
MIN	0	0	0	0	0	0	0	0	0	0	0	0
AC-FT	35	6.8	161	14	138	70	40	16	17	11	27	33

CAL YR 1974 TOTAL 310.37 MEAN .85 MAX 41 MIN 0 AC-FT 616
WTR YR 1975 TOTAL 287.15 MEAN .79 MAX 41 MIN 0 AC-FT 570

Peak discharge (base, 100 ft^3/s).--Dec. 3 (2300) 207 ft^3/s (6.65 ft); Feb. 2 (0900) 118 ft^3/s (5.18 ft).

11141000 SANTA MARIA RIVER AT GUADALUPE, CALIF.

LOCATION.--Lat 34°58'35", long 120°34'15", in Guadalupe Grant, Santa Barbara County, on downstream side of bridge on State Highway 1, 0.5 mi (0.8 km) north of Guadalupe, and 4.5 mi (7.2 km) upstream from mouth.

DRAINAGE AREA.--1,741 mi^2 (4,509 km^2).

PERIOD OF RECORD.--October 1940 to current year. Monthly discharge only October 1940 to January 1941, published in WSP 1315-B.

GAGE.--Water-stage recorder and supplementary gage near right bank. Datum of gage is 64.92 ft (19.788 m) above mean sea level. Prior to Aug. 11, 1955, at site 100 ft (30 m) upstream at same datum.

AVERAGE DISCHARGE.--35 years, 30.9 ft^3/s (0.875 m^3/s), 22,390 acre-ft/yr (27.6 hm^3/yr).

EXTREMES.--Current year: Maximum discharge, 245 ft^3/s (6.94 m^3/s) Mar. 8 (gage height, 5.96 ft or 1.817 m); no flow most of year.
Period of record: Maximum discharge, 32,800 ft^3/s (929 m^3/s) Jan. 16, 1952 (gage height, 8.18 ft or 2.493 m); maximum gage height, 10.00 ft (3.048 m) Feb. 26, 1969; no flow for all or parts of each year.

REMARKS.--Records good. Cuyama River regulated since February 1959 by Twitchell Reservoir, capacity, 240,000 acre-ft (296 hm^3). Several small surface diversions and extensive pumping from wells for irrigation along stream above station. AVERAGE DISCHARGE represents flow to ocean, regardless of upstream development.

DISCHARGE, IN CUBIC FEET PER SECOND, WATER YEAR OCTOBER 1974 TO SEPTEMBER 1975
MEAN VALUES

DAY	OCT	NOV	DEC	JAN	FEB	MAR	APR	MAY	JUN	JUL	AUG	SEP
1					0	0						
2					3.2	0						
3					0	0						
4					1.5	0						
5					4.7	0						
6					0	0						
7					0	0						
8					0	119						
9					0	21						
10					3.1	0						
11					2.5	0						
12					0	0						
13					0	0						
14					0	0						
15					0	0						
16					0	0						
17					0	0						
18					0	0						
19					0	0						
20					0	0						
21					0	0						
22					0	0						
23					0	0						
24					0	0						
25					0	0						
26					0	0						
27					0	0						
28					0	0						
29					---	0						
30					---	0						
31		---			---	0	---		---			---
TOTAL	0	0	0	0	15.0	140	0	0	0	0	0	0
MEAN	0	0	0	0	.54	4.52	0	0	0	0	0	0
MAX	0	0	0	0	4.7	119	0	0	0	0	0	0
MIN	0	0	0	0	0	0	0	0	0	0	0	0
AC-FT	0	0	0	0	30	278	0	0	0	0	0	0

CAL YR 1974 TOTAL 105.22 MEAN .29 MAX 69 MIN 0 AC-FT 209
WTR YR 1975 TOTAL 155.00 MEAN .42 MAX 119 MIN 0 AC-FT 307

Crest-stage partial-record stations

The following table contains annual maximum discharges for crest-stage stations. A crest-stage gage is a device which will register the peak stage occurring between inspections of the gage. A stage-discharge relation for each gage is developed from discharge measurements made by indirect measurements of peak flow or by current meter. The date of the maximum discharge is not always certain but is usually determined by comparison with nearby continuous-record stations, weather records, or local inquiry. Only the maximum discharge for the current water year is given. Information on some lower floods may have been obtained but is not published herein. The years given in the period of record represent water years for which the annual maximum has been obtained.

ANNUAL MAXIMUM DISCHARGE AT CREST-STAGE PARTIAL-RECORD STATIONS DURING WATER YEAR 1975

Station No.	Station name	Location	Drainage area (mi^2)	Period of record	Annual maximum		
					Date	Gage height (feet)	Discharge (ft^3/s)
		DALE LAKE BASIN					
10253320	Quail Wash near Joshua Tree	Lat 34°07'04", long 116°18'27", in SW¼NW¼NE¼ sec.1, T.1 S., R.6 E., San Bernardino County, on right bank 0.2 mi (0.3 km) downstream from Coyote Hole Spring and 1.1 mi (1.8 km) south of Joshua Tree.	100	1964-71a 1972-75	10-22-74	2.95	416
10253350	Fortynine Palms Creek near Twentynine Palms	Lat 34°07'12", long 116°05'43" (unsurveyed), San Bernardino County, in Joshua Tree National Monument, on left bank 50 ft (15 m) upstream from North Monument boundary, 1.1 mi (1.8 km) downstream from Fortynine Palms Oasis, and 2.6 mi (4.2 km) southwest of Twentynine Palms.	8.55	1962-71a 1972-75	10-22-74	1.87	51
		SALTON SEA BASIN					
10257800	Long Creek near Desert Hot Springs	Lat 33°57'53", long 116°26'35", in NW¼SE¼SE¼ sec.27, T.2 S., R.5 E., Riverside County, on left bank 0.4 mi (0.6 km) downstream from Metropolitan Water District aqueduct, and 3.3 mi (5.3 km) east of Desert Hot Springs.	19.4	1963-71a 1972-75	10-22-74	3.53	790
		EMERSON LAKE BASIN					
10260200	Pipes Creek near Yucca Valley	Lat 34°10'19", long 116°32'45", in NE¼SE¼NE¼ sec.15, T.1 N., R.4 E., San Bernardino County, on left bank 2.8 mi (4.5 km) upstream from Antelope Wash and 6.8 mi (10.9 km) northwest of Yucca Valley.	15.1	1958-71a 1972-75	--	--	0
		LUCERNE DRY LAKE BASIN					
10260400	Cushenbury Creek near Lucerne Valley	Lat 34°21'52", long 116°50'42", in NE¼SW¼NE¼ sec.14, T.3 N., R.1 E., San Bernardino County, in San Bernardino National Forest, on right bank 0.3 mi (0.5 km) upstream from forest boundary, and 9 mi (14 km) southeast of Lucerne Valley.	6.36	1957-71a 1972-75	--	--	0
		INDIAN WELLS VALLEY					
10264820	Little Dixie Wash near Inyokern	Lat 35°38'04", long 117°47'06", in NE¼NW¼ sec.33, T.26 S., R.39 E., Kern County, at culverts on U.S. Highway 395, 1.7 mi (2.7 km) southeast of Inyokern.	213	1975	9-9-75	9.65	289
10264878	Ninemile Creek near Brown	Lat 35°50'35", long 117°55'35" (unsurveyed), Inyo County, on left bank 600 ft (183 m) upstream from Los Angeles aqueduct and 6.4 mi (10.3 km) northwest of Brown.	10.4	1961-71a 1972-75	3-22-75	4.06	.68
		SANTA MONICA CREEK BASIN					
11119540	Santa Monica Creek at Carpinteria	Lat 34°24'51", long 119°31'32", in Pueblo Lands of Santa Barbara, Santa Barbara County, on right bank of Foothill Road (Hwy 192), 1.0 mi (1.6 km) northwest of Carpinteria.	3.64	1969 1972-75	12-3-74	1.95	190

See footnote at end of table.

ANNUAL MAXIMUM DISCHARGE AT CREST-STAGE PARTIAL-RECORD STATIONS DURING WATER YEAR 1975--Continued

Station No.	Station name	Location	Drainage area (mi^2)	Period of record	Annual maximum		
					Date	Gage height (feet)	Discharge (ft^3/s)
		SAN YSIDRO CREEK BASIN					
11119660	San Ysidro Creek at Montecito	Lat 34°26'46", long 119°37'17", in Pueblo Lands of Santa Barbara, Santa Barbara County, on right bank 0.5 mi (0.8 km) north of intersection of San Ysidro and East Valley Roads, Montecito.	3.07	1969 1972-75	12-3-74	25.1	125
		SYCAMORE CREEK BASIN					
11119700	Sycamore Creek at Santa Barbara	Lat 34°25'45", long 119°40'35", in Pueblo Lands of Santa Barbara, Santa Barbara County, on left bank at intersection of Sycamore Canyon Road and Alameda Padre Serra in Santa Barbara.	3.41	1971-72a 1973-75	12-3-74	4.00	815
		MISSION CREEK BASIN					
11119740	Mission Creek at Santa Barbara	Lat 34°27'09", long 119°42'30", in Pueblo Lands of Santa Barbara, Santa Barbara County, on left bank 0.4 mi (0.6 km) north of intersection of Foothill Road (Hwy 192) and Mission Canyon Road, 0.8 mi (1.3 km) north of Santa Barbara.	2.78	1972-75	3-8-75	17.58	510
		ATASCADERO CREEK BASIN					
11119900	Atascadero Creek at Puente Road, near Goleta	Lat 34°25'56", long 119°47'00", in Pueblo Lands of Santa Barbara, Santa Barbara County, on right bank of Puente Drive, 0.4 mi (0.6 km) south of Hollister Avenue, and 2.4 mi (3.9 km) east of Goleta.	3.86	1971-72a 1973-75	12-3-74	3.68	772
		SANTA YNEZ RIVER BASIN					
11128700	Thumbelina Creek at Buellton	Lat 34°36'37", long 120°11'01", in San Carlos De Jonata Grant, Santa Barbara County, on right side of channel on north side of State Highway 246, 0.6 mi (1.0 km) east of Buellton.	3.07	1972-75	12-3-74	6.33	61
11135200	Rodeo-San Pasqual Creek near Lompoc	Lat 34°38'42", long 120°30'57", in Lompoc Grant, Santa Barbara County, on left bank 0.1 mi (0.2 km) east of Dewolf Avenue and at Highway 246, 3.3 mi (5.3 km) west of Lompoc.	7.80	1971-72a 1973-75	3-7-75	2.70	365

a Operated as a continuous-record gaging station.

Measurements at miscellaneous sites

Measurements of streamflow at points other than gaging stations or partial-record stations are given in the following table.

DISCHARGE MEASUREMENTS MADE AT MISCELLANEOUS SITES DURING WATER YEAR 1975

Stream and/or name and No.	Tributary to	Location	Drainage area (mi^2)	Measured previously (water year)	Measurements	
					Date	Discharge (ft^3/s)
		SANTA ANA RIVER BASIN				
Cable Creek near Devore	Santa Ana River	Lat 34°13'25", long 117°23'05", in SE¼SE¼ sec.27, T.2 N., R.5 W., San Bernardino County, at bridge 1.2 mi (2.0 km) east of intersection of Devore Road and Cable Canyon Road, north of KOA recreation campgrounds.	--	--	11-5-74	0.29
					12-5-74	1.26
					1-6-75	.48
					2-3-75	1.25
					2-10-75	3.17
					3-3-75	.64
					3-6-75	2.94
					3-11-75	2.73
					4-1-75	1.67
					5-12-75	1.07
					6-10-75	.61
					7-8-75	.44
					8-5-75	.30
					9-9-75	.24
Badger Canyon Creek near San Bernardino	Santa Ana River	Lat 34°11'26", long 117°18'43", in NE¼NE¼ sec.9, T.2 N., R.5 W., San Bernardino County, at bridge 1.1 mi (1.8 km) east northeast of intersection of Devil Canyon Road and Badger Canyon Road.	--	--	11-5-74	.02
					12-4-74	.14
					2-3-75	.14
					2-10-75	.08
					3-3-75	.07
					3-6-75	.08
					3-11-75	.09
					4-1-75	.06
					5-13-75	.04
					6-10-75	.03
					9-9-75	.02
Sycamore Canyon Creek near San Bernardino	Santa Ana River	Lat 34°11'06", long 117°17'59", in SE¼NE¼ sec.9, T.2 N., R.4 W., San Bernardino County, 1.2 mi (2.0 km) north of intersection of 40th Street and F Street, 0.3 mi (0.5 km) northeast on firebreak road, 0.2 mi (0.3 km) northeast of tributary, about 250 ft (76 m) upstream from percolation basin.	--	--	11-5-74	.04
					12-4-74	.29
					1-6-75	.06
					2-3-75	.96
					2-10-75	.10
					3-6-75	.04
					3-11-75	.16
					4-1-75	.03
Sycamore Canyon Creek tributary near San Bernardino	Santa Ana River	Lat 34°11'05", long 117°17'51", in SE¼NE¼ sec.9, T.2 N., R.4 W., San Bernardino County, 1.2 mi (2.0 km) north of intersection of 40th Street and F Street, 0.2 mi (0.3 km) northeast of firebreak boad, about 200 ft (61 m) upstream from percolation basin.	--	--	12-4-74	.66
					2-3-75	.30
					2-10-75	.08
Sand Creek near San Bernardino	Santa Ana River	Lat 34°09'12", long 117°13'34", in SE¼SE¼ sec.19, T.1 N., R.3 W., San Bernardino County, 1.2 mi (2.0 km) north of Highland Avenue at Victoria Avenue intersection.	--	--	12-4-74	1.21
					2-10-75	.37
					3-3-75	.13
					3-6-75	.41
					3-11-75	1.46
					4-1-75	.22
Waterman Canyon Creek above diversion, near Arrowhead Springs	Santa Ana River	Lat 34°10'46", long 117°16'09", in SE¼SW¼ sec.11, T.1 N., R.4 W., San Bernardino County, 0.6 mi (1.0 m) northeast of intersection of Highway 18 and Waterman Canyon Road and 1.0 mi (1.6 km) upstream from mouth.	--	--	7-1-74a	1.00
					7-10-74a	1.25
					7-31-74a	.94
					8-23-74a	.75
					9-9-74a	.65
					10-3-74	.71
					11-5-74	1.04
					12-4-74	7.32
					1-6-75	1.19
					3-3-75	1.54
					4-15-75	3.67
					5-14-75	2.64
					6-11-75	1.60

See footnote at end of table.

DISCHARGE MEASUREMENTS MADE AT MISCELLANEOUS SITES DURING WATER YEAR 1975--Continued

Stream and/or name and No.	Tributary to	Location	Drainage area (mi^2)	Measured previously (water year)	Measurements	
					Date	Discharge (ft^3/s)
		SANTA ANA RIVER BASIN--Continued				
Waterman Canyon Creek below diversion, near Arrowhead Springs	Santa Ana River	Lat 34°10'35", long 117°16'17", in NE¼NE¼ sec.14, T.1 N., R.4 W., San Bernardino County, at bridge 0.4 mi (0.6 km) northeast of intersection of Highway 18 and Waterman Canyon Road and 0.8 mi (1.2 km) upstream from mouth.	--		7-1-74a	0.39
					7-10-74a	.84
					7-31-74a	.12
					8-23-74a	.29
					9-9-74a	.19
					10-3-74	.33
					11-5-74	1.16
					12-4-74	8.20
					1-6-75	1.16
					3-3-75	1.02
					4-15-75	3.86
					5-14-75	2.21
					6-11-75	1.26

a Not previously published.

MOJAVE RIVER BASIN

10261100 MOJAVE RIVER BELOW FORK RESERVOIR, NEAR HESPERIA, CALIF.1/

LOCATION.--Lat 34°20'38", long 117°14'15", in SW¼NE¼SW¼ sec.18, T.3 N., R.3 W., San Bernardino County.
DRAINAGE AREA.--211 mi^2 (546 km^2).
PERIOD OF RECORD.--Chemical analyses: October 1966 to September 1968, water years 1969-71, 1974 to current year (partial-record station).
REMARKS.--Discharge furnished by Corps of Engineers.

DATE	TIME	INSTANTANEOUS DISCHARGE (CFS)	DISSOLVED IRON (FE) (UG/L)	DISSOLVED CALCIUM (CA) (MG/L)	DISSOLVED MAGNESIUM (MG) (MG/L)	DISSOLVED SODIUM (NA) (MG/L)	DISSOLVED POTASSIUM (K) (MG/L)	BICARBONATE (HCO3) (MG/L)	CARBONATE (CO3) (MG/L)	ALKALINITY AS CACO3 (MG/L)	DISSOLVED SULFATE (SO4) (MG/L)
NOV. 20...	0900	5.0	--	25	3.2	39	2.7	107	0	88	38
JAN. 22...	0930	14	--	24	3.5	28	2.0	109	0	89	28
APR. 23...	0915	84	--	14	2.3	14	.8	58	0	48	10
MAY 22...	1200	45	20	--	--	--	--	--	--	--	--
JULY 23...	0900	--	--	24	3.8	46	2.3	116	0	95	61

DATE	DISSOLVED CHLORIDE (CL) (MG/L)	DISSOLVED FLUORIDE (F) (MG/L)	TOTAL NITRATE (N) (MG/L)	DISSOLVED SOLIDS (RESIDUE AT 180 C) (MG/L)	DISSOLVED SOLIDS (TONS PER AC-FT)	HARDNESS (CA,MG) (MG/L)	NONCARBONATE HARDNESS (MG/L)	PERCENT SODIUM	SODIUM ADSORPTION RATIO	SPECIFIC CONDUCTANCE (MICROMHOS)	PH (UNITS)
NOV. 20...	16	1.7	1.7	186	.25	76	0	52	2.0	300	7.8
JAN. 22...	14	1.5	.47	199	.27	74	0	44	1.4	245	7.7
APR. 23...	12	.4	.09	112	.15	46	0	40	.9	135	8.0
MAY 22...	--	--	--	--	--	--	--	--	--	--	--
JULY 23...	12	2.4	.07	225	.31	76	0	56	2.3	340	8.1

DATE	TEMPERATURE (DEG C)	TURBIDITY (JTU)	DISSOLVED OXYGEN (MG/L)	DISSOLVED ARSENIC (AS) (UG/L)	DISSOLVED BORON (B) (UG/L)	DISSOLVED CADMIUM (CD) (UG/L)	DISSOLVED COPPER (CU) (UG/L)	DISSOLVED LEAD (PB) (UG/L)	TOTAL MERCURY (HG) (UG/L)	DISSOLVED ZINC (ZN) (UG/L)
NOV. 20...	8.5	4	--	--	130	--	--	--	--	--
JAN. 22...	5.5	3	11.7	--	60	--	--	--	--	--
APR. 23...	10.0	4	10.7	--	100	--	--	--	--	--
MAY 22...	16.0	--	--	0	--	0	0	0	.1	0
JULY 23...	18.0	1	8.0	--	150	--	--	--	--	--

1/ Records furnished by California Department of Water Resources.

WATER QUALITY DATA, WATER YEAR OCTOBER 1974 TO SEPTEMBER 1975

SANTA ANA RIVER BASIN
11077500 SANTIAGO CREEK AT SANTA ANA, CALIF.

LOCATION. --Lat 33°46'13", long 117°53'02", in NW¼SW¼NW¼ sec.1, T.5 S., R.10 W., Orange County.
DRAINAGE AREA. --98.6 mi^2 (246 km^2).
PERIOD OF RECORD.--Sediment records: Water year 1974 (partial-record station).

DATE	TIME	TEMPERATURE (DEG C)	INSTANTANEOUS DISCHARGE (CFS)	SUSPENDED SEDIMENT (MG/L)	SUSPENDED SEDIMENT DISCHARGE (T/DAY)	SUS. SED. FALL DIAM. % FINER THAN .002 MM	SUS. SED. FALL DIAM. % FINER THAN .004 MM
DEC.							
04...	1215	--	179	315	152	50	61
FEB.							
03...	1010	11.0	73	159	31	--	--
04...	1205	14.0	6.0	34	.55	--	--
MAR.							
08...	1400	14.5	6.0	271	4.4	--	--

DATE	SUS. SED. FALL DIAM. % FINER THAN .008 MM	SUS. SED. FALL DIAM. % FINER THAN .016 MM	SUS. SED. FALL DIAM. % FINER THAN .031 MM	SUS. SED. SIEVE DIAM. % FINER THAN .062 MM	SUS. SED. SIEVE DIAM. % FINER THAN .125 MM	SUS. SED. SIEVE DIAM. % FINER THAN .250 MM	SUS. SED. SIEVE DIAM. % FINER THAN .500 MM
DEC.							
04...	72	82	87	90	95	98	100
FEB.							
03...	--	--	--	86	94	99	100
04...	--	--	--	99	100	--	--
MAR.							
08...	--	--	--	93	97	100	--

SANTA CLARA RIVER BASIN
11113300 SANTA CLARA RIVER NEAR SANTA PAULA, CALIF.1/

LOCATION.--Lat 34°21'14", long 119°01'38", in sec.12, T.3 N., R.21 W., Ventura County.
PERIOD OF RECORD.--Chemical analyses: October 1966 to July 1971, water years 1972 to current year (partial-record station).
REMARKS.--Discharge values reported are for Saticoy Diversion near Saticoy (sta 11113900).

DATE	TEMPERATURE (DEG C)	TURBIDITY (JTU)	DISSOLVED OXYGEN (MG/L)	DISSOLVED ARSENIC (AS) (UG/L)	DISSOLVED BORON (B) (UG/L)	DISSOLVED CADMIUM (CD) (UG/L)	DISSOLVED COPPER (CU) (UG/L)	DISSOLVED LEAD (PB) (UG/L)	TOTAL MERCURY (HG) (UG/L)	DISSOLVED ZINC (ZN) (UG/L)
NOV.										
19...	16.0	7	11.0	--	700	--	--	--	--	--
JAN.										
21...	13.5	3	11.0	--	1040	--	--	--	--	--
APR.										
22...	15.0	19	10.0	--	730	--	--	--	--	--
MAY										
15...	17.0	1	--	0	770	0	0	0	.0	20
21...	16.0	--	--	0	--	0	0	0	.1	0
JULY										
22...	20.0	126	8.7	--	840	--	--	--	--	--

DATE	DISSOLVED CHLORIDE (CL) (MG/L)	DISSOLVED FLUORIDE (F) (MG/L)	TOTAL NITRATE (N) (MG/L)	DISSOLVED SOLIDS (RESIDUE AT 180 C) (MG/L)	DISSOLVED SOLIDS (TONS PER AC-FT)	HARDNESS (CA,MG) (MG/L)	NONCARBONATE HARDNESS (MG/L)	PERCENT SODIUM	SODIUM ADSORPTION RATIO	SPECIFIC CONDUCTANCE (MICROMHOS)	PH (UNITS)
NOV.											
19...	63	1.0	4.7	1355	1.84	787	530	29	2.3	1700	8.0
JAN.											
21...	57	1.3	4.3	1366	1.86	723	460	28	2.1	1580	8.0
APR.											
22...	35	.9	2.5	905	1.23	521	310	25	1.5	1100	8.1
MAY											
15...	44	.8	3.6	1082	1.47	582	370	27	1.8	--	--
21...	--	--	--	--	--	--	--	--	--	--	--
JULY											
22...	53	1.0	4.5	1295	1.76	680	430	27	2.0	1500	8.0

DATE	TIME	DISCHARGE (CFS)	DISSOLVED IRON (FE) (UG/L)	DISSOLVED CALCIUM (CA) (MG/L)	DISSOLVED MAGNESIUM (MG) (MG/L)	DISSOLVED SODIUM (NA) (MG/L)	DISSOLVED POTASSIUM (K) (MG/L)	BICARBONATE (HCO3) (MG/L)	CARBONATE (CO3) (MG/L)	ALKALINITY AS CACO3 (MG/L)	DISSOLVED SULFATE (SO4) (MG/L)
NOV.											
19...	1030	20	--	200	70	147	5.9	315	0	258	693
JAN.											
21...	1045	59	--	183	65	128	5.1	318	0	261	611
APR.											
22...	0930	211	--	136	44	80	3.1	258	0	212	416
MAY											
15...	1130	94	10	154	48	98	3.9	264	0	217	490
21...	0900	86	10	--	--	--	--	--	--	--	--
JULY											
22...	0935	37	--	168	63	117	4.3	282	10	248	575

1/ Records furnished by California Department of Water Resources.

STATION NUMBER	LATITUDE	LONGITUDE	SEQ. NO.	LOCAL IDENTIFIER	TIME	DATE OF SAMPLE	TYPE	TEMPERATURE (DEG C)	CODE FOR AGENCY COLLECTING SAMPLE
334712115485601	33 47 12	115 48 56	01 (a)	004S011E27Q001S	1630	74-10-17	2	26.5	--
344443120164501	34 44 43	120 16 45	01 (b)	008N032W30H07S	1015	75-05-14	2	18.5	1028
345742120362501	34 57 42	120 36 25	01 (b)	010N035W07F01S	1040	74-10-24	2	17.0	1028
332018117080701	33 20 18	117 08 07	01 (c)	010S002W06F02S	1145	75-06-16	2	18.5	--

DATE OF SAMPLE	SODIUM ADSORPTION RATIO	PERCENT SODIUM	DISSOLVED POTASSIUM (K) (MG/L)	DISSOLVED CHLORIDE (CL) (MG/L)	DISSOLVED SULFATE (SO4) (MG/L)	DISSOLVED FLUORIDE (F) (MG/L)	DISSOLVED SILICA (SIO2) (MG/L)	DISSOLVED BORON (B) (UG/L)	DISSOLVED IRON (FE) (UG/L)	DISSOLVED SOLIDS (RESIDUE AT 180 C) (MG/L)	DISSOLVED SOLIDS (SUM OF CONSTITUENTS) (MG/L)	DISSOLVED SOLIDS (TONS PER AC-FT)
74-10-17	1.6	41	2.0	39	25	2.6	33	150	40	--	268	.36
75-05-14	1.5	35	2.3	62	87	.3	55	210	150	400	373	.52
74-10-24	1.4	16	3.9	140	1100	.7	--	200	--	2240	--	--
75-06-16	1.7	28	8.2	110	270	.2	29	100	40	--	810	1.10

DATE OF SAMPLE	SPECIFIC CONDUCTANCE (MICROMHOS)	PH (UNITS)	CARBON DIOXIDE (CO2) (MG/L)	ALKALINITY AS CACO3 (MG/L)	BICARBONATE (HCO3) (MG/L)	CARBONATE (CO3) (MG/L)	DISSOLVED NITRITE PLUS NITRATE (N) (MG/L)	HARDNESS (CA,MG) (MG/L)	NONCARBONATE HARDNESS (MG/L)	DISSOLVED CALCIUM (CA) (MG/L)	DISSOLVED MAGNESIUM (MG) (MG/L)	DISSOLVED SODIUM (NA) (MG/L)
74-10-17	445	--	--	119	145	--	1.4	130	10	38	8.3	42
75-05-14	550	8.3	.9	90	110	0	2.0	180	90	39	19	45
74-10-24	2600	8.3	2.6	271	330	0	--	1400	1100	330	140	120
75-06-16	1250	6.9	58	235	287	0	.31	480	250	120	44	86

DATE OF SAMPLE	TOTAL NITRATE (NO3) (MG/L)	ELEV. OF LAND SURFACE DATUM (FT. ABOVE MSL)	TOTAL DEPTH OF WELL (FT)
74-10-17	--	--	--
75-05-14	8.2	563	310
74-10-24	6.5	48	249
75-06-16	--	283	106

(a) Riverside County.
(b) Santa Barbara County.
(c) San Diego County.

Los Angeles County

Antelope Valley

343237117582401. Local number 5N/10W-6N1 S. Little Rock Irrigation District. Near Little Rock. Drilled unused water-table well in alluvium, diam 14 in (36 cm), depth 250+ ft (76+ m), cased with steel. Lsd 2,777.2 ft (847.0 m) above msl. Highest water level 85.05 ft (25.94 m) below lsd, Mar. 2, 1945; lowest 147.30 ft (44.93 m) below lsd, July 17, 1956. Records available: 1926, 1928, 1930, 1938-75. Records furnished by Los Angeles County Flood Control District and Geological Survey.

DATE	WATER LEVEL	DATE	WATER LEVEL	DATE	WATER LEVEL	DATE	WATER LEVEL
OCT. 10, 1974	120.5	DEC. 13, 1974	119.9	FEB. 11, 1975	117.9	MAY 8, 1975	119.8
NOV. 6	119.8	JAN. 9, 1975	118.4	APR. 13	117.7	JUNE 11	121.2

344421118282201. Local number 8N/15W-33G1 S. J. Alesso. West of Fairmont. Drilled domestic water-table well in alluvium, diam 12 in (30 cm), depth 400 ft (122 m) previously reported 282 ft (86 m), cased with steel. Lsd 2,930 ft (894 m) above msl. Highest water level 194.00 ft (59.17 m) below lsd, Jan. 23, 1946; lowest 284.00 ft (86.62 m) below lsd, Nov. 12, 1959. Records available: 1946-50, 1953-63, 1967-75. Measurements prior to 1968 furnished by California State Department of Water Resources.

DATE	WATER LEVEL	DATE	WATER LEVEL	DATE	WATER LEVEL	DATE	WATER LEVEL
FEB. 20, 1975	224.22						

Coastal Plain

335506118083201. Local number 3S/12W-8L3 S. Los Angeles County Farm. Near Downey. Drilled unused artesian well in Gaspur water-bearing zone of Holocene age and underlying deposits of Pleistocene age, diam 8 in (20 cm), depth 248 ft (75 m), cased with steel. Lsd 92 ft (28 m) above msl. Highest water level 14.45 ft (4.41 m) below lsd, Mar. 20, 1930; lowest 83.69 ft (25.52 m) below lsd, Aug. 27, 1962. Records available: 1930-75. Records furnished by San Gabriel Valley Protective Association.

DATE	WATER LEVEL	DATE	WATER LEVEL	DATE	WATER LEVEL	DATE	WATER LEVEL
OCT. 7, 1974	65.5	JAN. 6, 1975	63.6	MAR. 3, 1975	63.1	MAY 5, 1975	63.4
NOV. 4	64.6	FEB. 3	63.3	APR. 7	63.1	JUNE 2	64.8
DEC. 2	64.3						

344929118124401. Local number 4S/13W-14L1 S. Southern California Edison Co., Ltd. Long Beach. Drilled unused artesian well in Gaspur water-bearing zone of Holocene age, diam 10 in (25 cm), depth 114 ft (35 m), perforated 90-114 ft (27-35 m). Lsd 28.55 ft (8.71 m) above msl. Highest water level 20.62 ft (6.29 m) below lsd, Apr. 5, 1941; lowest 73.86 ft (22.53 m) below lsd, Sept. 22, 1971. Records available: 1930-75. Records furnished by city of Long Beach.

DATE	WATER LEVEL	DATE	WATER LEVEL	DATE	WATER LEVEL	DATE	WATER LEVEL
OCT. 2, 1974	58.12J	JAN. 15, 1975	62.22J	APR. 9, 1975	60.32J	JULY 29, 1975	56.87J
NOV. 20	58.72J	FEB. 20	57.62J	MAY 21	57.22J	AUG. 20	56.82J
DEC. 20	58.02J	MAR. 19	62.12J	JUNE 25	57.02J	SEP. 24	56.87J

334905118124601. Local number 4S/13W-23G2 S. City of Long Beach. Near Long Beach. Drilled unused artesian well in gravel in uppermost part of Silverado water-bearing zone of Pleistocene age, diam 26 to 16 in (66 to 41 cm), depth 1,074 ft (328 m), perforated 650-900 ft (198-274 m). Lsd 23.23 ft (7.08 m) above msl. Highest water level 52.93 ft (16.14 m) below lsd, Feb. 6, 1939; lowest 131.75 ft (40.18 m) below lsd, Jan. 20, 1953. Records available: 1932-75. Records furnished by city of Long Beach.

DATE	WATER LEVEL	DATE	WATER LEVEL	DATE	WATER LEVEL	DATE	WATER LEVEL
OCT. 23, 1974	121.98J	JAN. 22, 1975	121.58J	APR. 23, 1975	118.58J	JULY 29, 1975	124.58J
NOV. 20	123.88J	FEB. 20	119.38J	MAY 21	114.73J	AUG. 20	124.48J
DEC. 18	122.78J	MAR. 19	115.63J	JUNE 18	118.08J	SEP. 17	125.33J

J Water level below sea level.

Los Angeles County--Continued

San Gabriel River Basin

340535117573501. Local number 1S/10W-7R2 S. Key well U.S. 75. Baldwin Park. Drilled observation water-table well tapping fine sand to coarse gravel in alluvial deposits, diam 16 in (41 cm), depth 200 ft (61 m), perforated 74-174 ft (23-53 m), 181-196 ft (55-60 m). Lsd 387 ft (118 m) above msl. Highest water level 56.0 ft (17.1 m) below lsd, May 19, 1916; lowest 177.93 ft (54.27 m) below lsd, Oct. 5, 1965. Records available: 1903-75.

DATE	WATER LEVEL	DATE	WATER LEVEL	DATE	WATER LEVEL	DATE	WATER LEVEL
OCT. 15, 1974	155.01	JAN. 15, 1975	157.72	JUNE 23, 1975	152.26	AUG. 25, 1975	158.68
NOV. 15	156.43	FEB. 15	158.59	JULY 24	154.42	SEP. 19	160.84
DEC. 15	157.22	MAY 22	155.37				

Orange County

Coastal Plain

334837118040001. Local number 4S/11W-19K1 S. Los Alamitos Sugar Co. Near Los Alamitos. Drilled unused artesian well in deposits of Pleistocene age, diam 12 in (30 cm), depth 448 ft (137 m), perforated 440-460 ft (134-140 m). Lsd 28.50 ft (8.69 m) above msl. Highest water level flowing, 1901; lowest 73.53 ft (22.43 m) below lsd, July 22, 1957. Records available: 1901, 1903, 1929-75. Records furnished by city of Long Beach.

DATE	WATER LEVEL	DATE	WATER LEVEL	DATE	WATER LEVEL	DATE	WATER LEVEL
OCT. 23, 1974	46.68J	JAN. 22, 1975	38.68J	APR. 23, 1975	38.08J	JULY 29, 1975	53.18J
NOV. 20	44.08J	FEB. 20	36.48J	MAY 21	46.78J	AUG. 20	56.48J
DEC. 21	41.68J	MAR. 27	35.63J	JUNE 18	47.58J	SEP. 17	52.48J

Riverside County

Joshua Tree National Monument

340039116105701. Local number 2S/8E 7K1 S. National Park Service (Stokes No. 2). In narrow valley east of Hidden Valley at west side of Lost Horse Valley. Drilled unused water-table well in residuum, diam 8 in (20 cm), depth 290 ft (88 m), casing information not available. Lsd 4,100 ft (1,250 m) above msl. Highest water level 202.52 ft (61.77 m) below lsd, Sept. 10, 1962; lowest 224.66 ft (68.52 m) below lsd, Apr. 7, 1975. Records available: 1961-75.

DATE	WATER LEVEL	DATE	WATER LEVEL	DATE	WATER LEVEL	DATE	WATER LEVEL
OCT. 18, 1974	224.09	APR. 7, 1975	224.66				

335612115243301. Local number 3S/15E-4J1 S. National Park Service (Kaiser No. 2). East end of Pinto basin near Kaiser Steel Co.'s Eagle Mountain wells. Drilled unused water-table well in alluvium, diam 16 in (41 cm), depth 575 ft (175 m), casing information not available. Lsd 1,080.6 ft (329.6 m) above msl. Highest water level 150.00 ft (45.75 m) below lsd, Dec. 4, 1954; lowest 167.88 ft (51.20 m) below lsd, Apr. 7, 1975. Records available: 1954-75.

DATE	WATER LEVEL	DATE	WATER LEVEL	DATE	WATER LEVEL	DATE	WATER LEVEL
OCT. 17, 1974	167.48	APR. 7, 1975	167.88C				

334712115485601. Local number 4S/11E-27Q1 S. National Park Service (Cottonwood well). In Smoketree Wash 3.5 mi (5.6 km) north of Cottonwood Spring. Drilled public-supply water-table well in alluvium, diam 12 in (30 cm), depth 403 ft (123 m), casing information not available. Lsd 2,975 ft (907 m) above msl. Highest water level 170.29 ft (51.94 m) below lsd, Mar. 12, 1959; lowest 191.89 ft (58.53 m) below lsd, June 15, 1972. Records available: 1958-61, 1963-75.

DATE	WATER LEVEL	DATE	WATER LEVEL	DATE	WATER LEVEL	DATE	WATER LEVEL
OCT. 17, 1974	188.49	APR. 7, 1975	A	APR. 8, 1975	191.15		

J Water level below sea level.
C Nearby well being pumped.
A Well being pumped.

San Bernardino County

Santa Ana River Basin

340517117174901. Local number 1S/4W-29H2 S. Riverside Water Co., flume 1. South of Colton. Drilled irrigation water-table well in alluvium of Pleistocene and Holocene age, diam 20 in (51 cm), depth 189 ft (58 m), perforated 43-70, 83-97, 131-169 ft (13-21, 25-30, 40-52 m), cased with steel. Lsd 934.4 ft (285.0 m) above msl. Highest water level 2.90 ft (0.88 m) below lsd, June 3, 1938; lowest 127.40 ft (38.86 m) below lsd, Oct. 30, 1964. Records available: 1928-75. Records furnished by owner.

DATE	WATER LEVEL	DATE	WATER LEVEL	DATE	WATER LEVEL	DATE	WATER LEVEL
OCT. 1, 1974	67.99	JAN. 7, 1975	60.59	APR. 1, 1975	54.59	JULY 1, 1975	57.79
NOV. 5	68.19	FEB. 3	62.69	MAY 6	53.69	AUG. 4	60.09
DEC. 1	64.69	MAR. 11	56.59	JUNE 3	50.39	SEP. 10	64.59

340718117204101. Local number 1N/4W-32N1 S. City of San Bernardino. Baseline well. Northwest of San Bernardino. Drilled observation water-table well in alluvium of Pleistocene age, diam 20 in (51 cm), depth 581 ft (177 m), perforated 126-184, 224-232, 262-304, 312-372, 468-476, 540-560 ft (38-56, 68-71, 80-93, 95-113, 143-145, 165-171 m), cased with steel. Lsd 1,184.8 ft (361.4 m) above msl. Highest water level 49.10 ft (14.98 m) below lsd, Mar. 6, 1947; lowest 247.1 ft (75.4 m) below lsd, Aug. 27, 1968. Records available: 1946-75. Records furnished by San Bernardino Municipal Water Department.

DATE	WATER LEVEL	DATE	WATER LEVEL	DATE	WATER LEVEL	DATE	WATER LEVEL
OCT. 16, 1974	183.51A	JAN. 14, 1975	167.61	MAY 1, 1975	174.31	JULY 17, 1975	A
NOV. 14	170.11	FEB. 27	172.11	MAY 27	A	AUG. 22	A
DEC. 14	171.81	MAR. 20	159.41A	JUNE 17	A		

San Diego County

San Luis Rey River Basin

332018117080701. Local number 10S/2W-6F2 S. San Luis Rey Ranch. Monserate Narrows, near gaging station. Drilled unused water-table well in alluvium of Holocene age, diam 12 in (30 cm), depth 109 ft (33 m), cased with steel. Lsd 282.36 ft (86.12 m) above msl. Highest water level 6.92 ft (2.11 m) below lsd, Mar. 11, 1969; lowest dry, Aug. 13, 1962, Aug. 17, 1964. Records available: 1951-73, 1975. Published measurements prior to 1951 are for well 10S/2W-6F6.

DATE	WATER LEVEL	DATE	WATER LEVEL	DATE	WATER LEVEL	DATE	WATER LEVEL
JAN. 29, 1975	9.86	APR. 22, 1975	7.79	JUNE 16, 1975	A	AUG. 26, 1975	11.35
MAR. 10	8.46	MAY 22	7.87	JULY 29	16.49A	SEP. 26	11.85

Santa Barbara County

Carpenteria Basin

342414119274201. Local number 4N/25W-26A1 S. Moses Mesa Associates Co. Drilled unused water-table well in Casitas Formation of Pleistocene age, diam 10 in (25 cm), depth 480 ft (146 m), cased to 480 ft (146 m), perforated 228-480 ft (70-146 m). Lsd 420 ft (128 m) above msl. Highest water level 185.40 ft (56.51 m) below lsd, Apr. 8, 1975; lowest 387.00 ft (118.04 m) below lsd, Nov. 28, 1955. Records available: 1940-41, 1944-75 (previously reported 1946-65; records updated and corrected).

DATE	WATER LEVEL	DATE	WATER LEVEL	DATE	WATER LEVEL	DATE	WATER LEVEL
APR. 8, 1975	185.40						

342341119290701. Local number 4N/25W-27Q2 S. A. F. Heimlich. Drilled unused artesian well in Casitas Formation of Pleistocene age, diam 10 in (25 cm), depth 198 ft (60 m), casing information not available. Lsd 127 ft (39 m) above msl. Highest water level 73.59 ft (22.44 m) below lsd, May 22, 1964; lowest 175.42 ft (53.50 m) below lsd, Sept. 25, 1951. Records available: 1941-75.

DATE	WATER LEVEL	DATE	WATER LEVEL	DATE	WATER LEVEL	DATE	WATER LEVEL
APR. 8, 1975	P						

A Well being pumped.
P Destroyed.

Santa Barbara County--Continued

Carpenteria Basin--Continued

342349119312801. Local number 4N/25W-29L1 S. A. P. Salzgeber. Drilled unused artesian well in alluvium, diam 2 in (5 cm), depth 110 ft (34 m), casing information not available. Lsd 18 ft (5 m) above msl. Highest water level, flowing, 1943, several times 1971, Mar. 9, 1972, Apr. 13, 1973, Apr. 2, 1974, Apr. 8, 1975; lowest 51.24 ft (15.63 m) below lsd, Sept. 25, 1951. Records available: 1943, 1946, 1950-75 (previously reported 1950-65; records updated and corrected).

DATE	WATER LEVEL	DATE	WATER LEVEL	DATE	WATER LEVEL	DATE	WATER LEVEL
APR. 8, 1975	Q						

Cuyama Valley

345732119423101. Local number 10N/27W-12R1 S. William Kirchenmann Estate. Drilled domestic and irrigation water-table well in alluvium, diam 12 in (30 cm), depth 131 ft (40 m), cased to 131 ft (40 m), perforated 53-128 ft (16-39 m). Lsd 2,045 ft (624 m) above msl. Highest water level 38.58 ft (11.77 m) below lsd, Apr. 28, 1942; lowest dry, Apr. 2, 1975. Records available: 1941-75.

DATE	WATER LEVEL	DATE	WATER LEVEL	DATE	WATER LEVEL	DATE	WATER LEVEL
APR. 2, 1975	F						

San Antonio Valley

344443120164501. Local number 8N/32W-30H7 S. Los Alamos Community Service District. Near Los Alamos Fire Station. Drilled public-supply artesian well in Paso Robles Formation of Pliocene and Pleistocene(?) age, diam 13 in (33 cm), depth 310 ft (95 m), cased to 310 ft (95 m), perforated 124-310 ft (38-95 m). Lsd 563 ft (172 m) above msl. Highest water level 24.10 ft (7.35 m) below lsd, Mar. 25, 1966; lowest 36.96 ft (11.27 m) below lsd, Aug. 31, 1964. Records available: 1964-75.

DATE	WATER LEVEL	DATE	WATER LEVEL	DATE	WATER LEVEL	DATE	WATER LEVEL
APR. 1, 1975	26.65						

344547120252901. Local number 8N/34W-23B1 S. Josephine Harris Estate. Near Los Alamos. Harris-Los Alamos Road and State Highway 1. Drilled unused artesian well in alluvium, diam 12 in (30 cm), depth 150 ft (46 m), casing information not available. Lsd 315 ft (96 m) above msl. Highest water level 12.19 ft (3.72 m) below lsd, Feb. 28, 1944; lowest 36.36 ft (11.09 m) below lsd, Mar. 8, 1972. Records available: 1943-75.

DATE	WATER LEVEL	DATE	WATER LEVEL	DATE	WATER LEVEL	DATE	WATER LEVEL
APR. 1, 1975	22.80						

Santa Maria Valley

345251120270701. Local number 9N/34W-3N1 S. City of Santa Maria. Near Orcutt. Drilled unused artesian well in Paso Robles Formation of Pliocene and Pleistocene(?) age, diam 16 in (41 cm), depth 232 ft (71 m), perforated 163-190 ft (50-58 m). Lsd 258 ft (79 m) above msl. Highest water level 142 ft (43 m) below lsd, June 30, July 31, 1937, June 30, 1938; lowest dry, Apr. 10, 1973. Records available: 1932-34, 1937-42, 1945, 1947, 1950, 1954-75.

DATE	WATER LEVEL	DATE	WATER LEVEL	DATE	WATER LEVEL	DATE	WATER LEVEL
APR. 2, 1975	186.70						

345616120231001. Local number 10N/33W-19B1 S. Owen T. Rice, near Santa Maria. Battles and East Stowell Roads. Drilled irrigation water-table well in alluvium and Paso Robles Formation of Pliocene and Pleistocene(?) age, diam 16 in (41 cm), depth 307 ft (94 m), perforated 92-97, 116-125, 190-215, 238-248 ft (28-30, 35-38, 58-66, 72-76 m). Lsd 275 ft (84 m) above msl. Highest water level 72.70 ft (22.17 m) below lsd, Apr. 1, 1970; lowest 191.3 ft (58.3 m) below lsd, Aug. 30, 1965. Records available: 1927, 1929-75.

DATE	WATER LEVEL	DATE	WATER LEVEL	DATE	WATER LEVEL	DATE	WATER LEVEL
OCT. 1, 1974	121.3 G	JAN. 20, 1975	122.5 G	APR. 2, 1975	117.55	JULY 1, 1975	150.5 G

Q Flowing.
F Dry.
G Measurement by another agency.

Santa Barbara County--Continued

Santa Maria Valley--Continued

345742120362501. Local number 10N/35W-7F1 S. M. J. Ellis. Near Guadalupe. Drilled domestic and irrigation artesian well in alluvium and Paso Robles Formation of Pliocene and Pleistocene(?) age, diam 12 in (30 cm), depth 249 ft (76 m), perforated 140-145, 200-225 ft (43-44, 61-69 m). Lsd 48 ft (15 m) above msl. Highest water level flowing, Jan. 1, 1942, Jan. 1, Feb. 29, Nov. 29, Dec. 28, 1944, Jan. 1, Apr. 1, Dec. 28, 1945, Jan. 1, Dec. 28, 1946, Jan. 7, 1947; lowest 37.40 ft (11.41 m) below lsd, July 1, 1961. Records available: 1929-36, 1938-75.

DATE	WATER LEVEL	DATE	WATER LEVEL	DATE	WATER LEVEL	DATE	WATER LEVEL
OCT. 15, 1974	14.6 G	FEB. 26, 1975	5.92	APR. 1, 1975	8.6 G	JULY 1, 1975	10.5 G
JAN. 20, 1975	7.8 G						

Santa Ynez Valley

343627120030801. Local number 6N/30W-9N1 S. San Lucas Ranch. Near Santa Ynez. Drilled stock water-table well in Paso Robles(?) Formation of Pliocene and Pleistocene(?) age, diam 8 in (20 cm), depth 160 ft (49 m), casing information not available. Lsd 660.01 ft (201.30 m) above msl. Highest water level 24.06 ft (7.34 m) below lsd, July 27, 1960; lowest 41.54 ft (12.67 m) below lsd, Jan. 30, 1956. Records available: 1941-75.

DATE	WATER LEVEL	DATE	WATER LEVEL	DATE	WATER LEVEL	DATE	WATER LEVEL
APR. 8, 1975	41.49						

343714120144501. Local number 6N/32W-9A2 S. E. F. Airey. Near Buellton. Drilled irrigation water-table well in alluvium, diam 12 in (30 cm), depth 72 ft (22 m), casing information not available. Lsd 308.03 ft (93.95 m) above msl. Highest water level 29.23 ft (8.92 m) below lsd, Jan. 16, 1952; lowest 42.30 ft (12.90 m) below lsd, Sept. 20, 1971. Records available: 1941-42, 1945, 1949-58, 1960-75.

DATE	WATER LEVEL	DATE	WATER LEVEL	DATE	WATER LEVEL	DATE	WATER LEVEL
APR. 8, 1975	34.25						

343630120213501. Local number 6N/33W-9P1 S. Hollister Estate. Near Lompoc. Drilled unused water-table well in alluvium, diam 16 in (41 cm), depth 83 ft (25 m), casing information not available. Lsd 203.03 ft (61.95 m) above msl. Highest water level 21.80 ft (6.65 m) below lsd, Apr. 3, 1941; lowest 59.72 ft (18.21 m) below lsd, May 28, 1951. Records available: 1932-75.

DATE	WATER LEVEL	DATE	WATER LEVEL	DATE	WATER LEVEL	DATE	WATER LEVEL
OCT. 30, 1974	38.70	NOV. 27, 1974	40.00	DEC. 23, 1974	37.50	JAN. 30, 1975	P

343831120055001. Local number 7N/31W-36L2 S. D. B. Kilbourne. Near Ballard. Baseline and Grand (Refugio) Avenues. Drilled domestic and irrigation water-table well in Paso Robles Formation, diam 12 in (30 cm), depth 230 ft (70 m), casing information not available. Lsd 720.62 ft (219.79 m) above msl. Highest water level 16.54 ft (5.04 m) below lsd, Apr. 7, 1943; lowest 128.20 ft (39.10 m) below lsd, Oct. 14, 1968. Records available: 1942-75.

DATE	WATER LEVEL	DATE	WATER LEVEL	DATE	WATER LEVEL	DATE	WATER LEVEL
APR. 8, 1975	78.94						

344219120250601. Local number 7N/34W-12E1 S. U.S. Geological Survey. Union Oil Co., Purisima Lease. Near Lompoc. Drilled observation artesian well in Careaga Sand of Pliocene age, diam 8 to 16 in (20 to 41 cm), depth 385 ft (117 m), cased to 385 ft (117 m), perforated 145-385 ft (44-117 m). Lsd 385.83 ft (117.68 m) above msl. Highest water level 301.00 ft (91.80 m) below lsd, June 19, 1949; lowest dry, Mar. 29, Oct. 27, 1967. Records available: 1949-50, 1956, 1959, 1961-67, 1970-75.

DATE	WATER LEVEL	DATE	WATER LEVEL	DATE	WATER LEVEL	DATE	WATER LEVEL
OCT. 30, 1974	316.70	JAN. 29, 1975	317.40	APR. 30, 1975	317.10	JULY 29, 1975	317.65
NOV. 27	317.20	FEB. 27	318.00	MAY 29	317.35	AUG. 28	317.75
DEC. 23	317.33	APR. 2	317.45	JULY 1	317.44		

G Measurement by another agency.
P Destroyed.

Santa Barbara County--Continued

Santa Ynez Valley--Continued

343948120292001. Local number 7N/34W-29E4 S. W. H. Sanor. Near Lompoc. Central and Floradale Avenues. Drilled irrigation artesian well in alluvium, diam 16 in (41 cm), depth 176 ft (54 m), casing information not available. Lsd 67.71 ft (20.65 m) above msl. Highest water level 18.36 ft (5.60 m) below lsd, Mar. 31, 1958; lowest 48.14 ft (14.68 m) below lsd, July 24, 1963. Records available: 1945-75.

DATE	WATER LEVEL	DATE	WATER LEVEL	DATE	WATER LEVEL	DATE	WATER LEVEL
APR. 10, 1975	27.10						

344043120322402. Local number 7N/35W-23E4 S. U.S. Geological Survey. Union Sugar Co. property. Near Lompoc. Ocean and Union Sugar Co. Avenues. Drilled observation water-table well in alluvium, diam 2 in (5 cm), depth 28 ft (9 m), casing information not available. Lsd 36.90 ft (11.26 m) above msl. Highest water level 12.22 ft (3.73 m) below lsd, Mar. 27, 1952; lowest 22.79 (6.95 m) below lsd, Aug. 26, 1948. Records available: 1947-75.

DATE	WATER LEVEL	DATE	WATER LEVEL	DATE	WATER LEVEL	DATE	WATER LEVEL
APR. 9, 1975	M						

343941120313901. Local number 7N/35W-26J4 S. County of Santa Barbara, Artesia School District. Near Lompoc. Artesia and Central Avenues. Drilled public-supply artesian well in alluvium, diam 8 in (20 cm), depth 141 ft (43 m), perforated 132-140 ft (40-43 m). Lsd 40.86 ft (12.46 m) above msl. Highest water level 4.53 ft (1.38 m) below lsd, Feb. 26, 1969; lowest 36.40 ft (11.10 m) below lsd, Mar. 29, 1965. Records available: 1947-75.

DATE	WATER LEVEL	DATE	WATER LEVEL	DATE	WATER LEVEL	DATE	WATER LEVEL
OCT. 25, 1974	17.50	JAN. 27, 1975	11.20	APR. 25, 1975	17.30	JULY 25, 1975	22.36
NOV. 22	13.73	FEB. 25	9.80	MAY 27	18.30	AUG. 25	15.00
DEC. 23	10.95	MAR. 27	9.70	JUNE 25	25.55	SEP. 25	20.20

M Obstruction in well above water surface.

INDEX

Page

Accuracy of data..... 17
Acre-foot, definition of..... 3
Agua Caliente Creek near Warner Springs..... 222
Alamo Creek near Nipomo..... 521
Alamo Pintado Creek near Solvang..... 505
Alamo River near Niland..... 110
Algae, definition of..... 3
Alisal Reservoir near Solvang..... 506
Aliso Creek at El Toro..... 252
All-American Canal, below Pilot Knob wasteway... 94
near Imperial Dam, Ariz.-Calif..... 92
Amargosa River at Tecopa..... 106
Andreas Creek near Palm Springs..... 138
Aquifer, definition of..... 3
Arroyo Burro Creek at Santa Barbara..... 491
Arroyo Seco (tributary to Los Angeles River)
near Pasadena..... 395
Arroyo Simi near Simi..... 417
Arroyo Trabuco at San Juan Capistrano..... 247
Artesian, definition of..... 3
Atascadero Creek, at Puente Road, near Goleta... 532
near Goleta..... 493
Atascadero Creek basin, crest-stage partial-
record stations in..... 532

Bacteria, definition of..... 3
Ballona Creek near Culver City..... 414
Bautista Creek at Valle Vista..... 311
Benthic organisms, definition of..... 3
Big Bear Lake near Big Bear Lake..... 270
Big Pine Creek near Big Pine..... 168
Big Rock Creek near Valyermo..... 157
Big Tujunga Creek near Sunland..... 390
Biochemical oxygen demand, definition of..... 3
Biological and microbiological variables..... 20
Biomass, definition of..... 3
Bishop Creek below powerplant No. 6, near Bishop 167
Blosser ditch near Donovan Road, at Santa Maria. 529
Borrego Palm Creek near Borrego Springs..... 127
Bouquet Creek near Saugus..... 425
Bradley ditch near Donovan Road, at Santa Maria. 528
Brea Creek below Brea Dam, near Fullerton..... 384

Cachuma, Lake, near Santa Ynez..... 503
Cajon Creek below Lone Pine Creek, near
Keenbrook..... 296
Calleguas Creek at Camarillo State Hospital..... 419
Carotene, definition of..... 4
Campo Creek near Campo..... 196
Carbon Creek below Carbon Canyon Dam..... 353
Carpinteria Creek near Carpinteria..... 487
Caruthers Creek near Ivanpah..... 107
Castaic Creek near Saugus..... 426
Chemical oxygen demand, definition of..... 4
Chino Canyon Creek near Palm Springs..... 135
Chino Creek at Schaefer Avenue, near Chino..... 319
Chlorophyll, definition of..... 4
City Creek near Highland..... 278
Collection and computation of data, surface
water..... 14
Collection and examination of data, water-
quality records..... 18
Collection of the data, ground-water levels..... 24
Colorado River, above Imperial Dam, Ariz.-Calif. 65
at Needles..... 37
at northerly international boundary, above
Morelos Dam, near Andrade..... 79
at Palo Verde Dam, Ariz.-Calif..... 60
below Davis Dam, Ariz.-Nev..... 35
below Hoover Dam, Ariz.-Nev..... 30
below Imperial Dam, Ariz.-Calif..... 74
below Imperial Dam, schematic diagram of..... 101
below Laguna Dam, Ariz.-Calif..... 75
below Parker Dam, Ariz.-Calif..... 54
below Yuma Main Canal wasteway, at Yuma, Ariz. 78
near Topock, Ariz..... 38
Colorado River aqueduct, near Parker Dam,
Ariz.-Calif..... 40
near San Jacinto..... 42
Conejo Creek above Highway 101, near Camarillo.. 418
Contents, definition of..... 4
Control, definition of..... 4

Page

Conversion factors, (SI units)..... 29
Convict Creek near Mammoth Lakes..... 163
Cooperation..... 2
Cottonwood Creek (head of Tijuana River) above
Tecate Creek, near Dulzura..... 195
Cottonwood Creek (Owens Lake basin) near Olancha 188
Coyote Creek (tributary to Salton Sea) near
Borrego Springs..... 126
Coyote Creek (tributary to San Gabriel River) at
Los Alamitos..... 387
Coyote Creek (tributary to Ventura River), near
Oak View..... 478
near Ventura..... 480
Crest-stage partial-record stations, discharge
at..... 531
Cubic foot per second, definition of..... 4
Cucamonga Creek, near Mira Loma..... 322
near Upland..... 321
Cushenberry Creek near Lucerne Valley..... 531
Cuyama River, below Buckhorn Canyon, near Santa
Maria..... 520
below Twitchell Dam..... 523

Dale Lake basin, crest-stage partial-record
stations in..... 531
Darwin Creek near Darwin..... 104
Data, accuracy of..... 17
explanation of, ground-water levels..... 24
surface-water records..... 14
water-quality records..... 18
other data available..... 18
Deep Creek (head of Mojave River) near Hesperia. 143
Deep Creek (tributary to Salton Sea) near Palm
Desert..... 139
Definition of terms..... 3
Devil Canyon Creek near San Bernardino..... 297
Discharge, at miscellaneous sites..... 533
at partial-record stations..... 531
crest-stage partial-record stations..... 531
definition of..... 4
Dissolved, definition of..... 4
Diversity index, definition of..... 4
Division of work..... 2
Downstream order and station number..... 11
Drainage area, definition of..... 4
Drainage basin, definition of..... 4

East Twin Creek near Arrowhead Springs..... 283
El Capitan Reservoir near Lakeside..... 206
El Modena-Irvine Channel near Irvine..... 259
Emerson Lake basin, crest-stage partial-record
stations in..... 531
Explanation of, ground-water level records..... 24
surface-water records..... 14
water-quality records..... 18

Fish Creek near Duarte..... 376
Fortynine Palms Creek near Twentynine Palms..... 531
Franklin Creek at Carpinteria..... 488
Ft^3/s-day, definition of..... 4
Fullerton Creek, at Richman Avenue, at Fullerton 386
below Fullerton Dam, near Brea..... 385

Gage height, definition of..... 5
Gaging station, definition of..... 5
Gaviota Creek near Gaviota..... 496
Gibraltar Reservoir, contents of..... 499
Gila Gravity Main Canal at Imperial Dam,
Ariz.-Calif..... 89
Ground water, chemical analyses of..... 538
Ground-water levels, by county..... 539
Los Angeles County..... 539
Orange County..... 540
Riverside County..... 540
San Bernardino County..... 541
San Diego County..... 541
Santa Barbara County..... 541
Guejito Creek near San Pasqual..... 218

Hardness, definition of..... 5
Havasu, Lake, near Parker Dam, Ariz.-Calif..... 52
Hemet, Lake, near Idyllwild..... 308

Page
Hodges, Lake, near Escondido..... 220
Hopper Creek near Piru..... 448
Huasna River near Arroyo Grande..... 522
Hydrologic bench-mark station..... 10
Hydrologic conditions..... 25

Independence Creek below Pinyon Creek, near Independence..... 186
Indian Wells Valley, crest-stage partial-record stations in..... 531
Introduction..... 1
Irrigation network stations..... 10

Jalama Creek near Lompoc..... 497
Jameson Lake, contents of..... 498
Jamul Creek near Jamul..... 202

Keys Creek tributary at Valley Center..... 227

Lakes and reservoirs:
Alisal Reservoir near Solvang..... 506
Big Bear Lake near Big Bear Lake..... 270
Cachuma, Lake, near Santa Ynez..... 503
El Capitan Reservoir near Lakeside..... 206
Gibraltar Reservoir..... 499
Havasu, Lake, near Parker Dam, Ariz.-Calif.... 52
Hemet, Lake, near Idyllwild..... 308
Hodges, Lake, near Escondido..... 220
Jameson Lake..... 496
Lower Otay Reservoir near Chula Vista..... 203
Matilija Reservoir at Matilija Hot Springs.... 472
Mono Lake near Mono Lake..... 190
Piru, Lake, near Piru..... 444
Rodriguez Reservoir at Rodriguez Dam, Baja California, Mexico..... 198
San Vicente Reservoir near Lakeside..... 207
Sweetwater Reservoir near National City..... 205
Vail Lake..... 234
Wohlford, Lake, near Escondido..... 221
Las Flores Creek near Oceanside..... 240
Lee Vining Creek near Lee Vining..... 194
Little Dixie Wash near Inyokern..... 531
Little Rock Creek near Little Rock..... 160
Little San Gorgonio Creek near Beaumont..... 280
Local well number..... 12
Lockwood Creek, at Gorge, near Stauffer..... 438
Middle Fork, near Stauffer..... 437
Lone Pine Creek near Keenbrook..... 295
Long Creek near Desert Hot Springs..... 531
Los Angeles Aqueduct at outlet, at San Fernando. 184
Los Angeles River, at Feliz Boulevard, Los Angeles..... 392
at Long Beach..... 402
at Los Angeles..... 394
at Sepulveda Dam..... 388
at Willow Street Bridge, at Long Beach..... 403
near Downey..... 396
Los Angeles River basin, schematic diagram of... 371
Los Penasquitos Creek, below Poway Creek, near Poway..... 214
near Poway..... 215
Lower Otay Reservoir near Chula Vista..... 203
Lucerne Dry Lake basin, crest-stage partial-record stations in..... 531
Lytle Creek, at Colton..... 298
near Fontana..... 293

Macrophytes, definition of..... 5
Malibu Creek at Crater Camp, near Calabasas..... 416
Maria Ygnacio Creek at University Drive, near Goleta..... 492
Matilija Creek, at Matilija Hot Springs..... 473
North Fork, at Matilija Hot Springs..... 475
Matilija Reservoir at Matilija Hot Springs..... 472
Meeks and Daley Canal near Colton..... 292
Metamorphic stage, definition of..... 5
Methylene blue active substance, definition of.. 5
Micrograms per liter, definition of..... 5
Miguelito Creek at Lompoc..... 514
Mill Creek (tributary to Mono Lake) below Lundy Lake, near Mono Lake..... 191
Mill Creek (tributary to Santa Ana River) near Yucaipa..... 274
Milligrams per liter, definition of..... 5
Miscellaneous sites, discharge measurements at.. 533
Mission Creek (Los Angeles River basin) near Montebello..... 399

Page
Mission Creek (Salton Sea basin) near Desert Hot Springs..... 134
Mission Creek (tributary to Pacific Ocean), at Santa Barbara..... 532
near Mission Street, at Santa Barbara..... 489
Mission Creek basin, crest-stage partial-record stations in..... 532
Mojave River, at Afton..... 156
at Barstow..... 155
at lower narrows, near Victorville..... 145
below Forks Reservoir, near Hesperia..... 535
near Hodge..... 154
West Fork, near Hesperia..... 144
Mono Lake near Mono Lake..... 190
Murrieta Creek at Temecula..... 235

National stream-quality accounting network..... 10
Nekton, definition of..... 5
New River, at international boundary, at Calexico..... 111
near Westmorland..... 124
Ninemile Creek near Brown..... 531
Numbering system for wells and miscellaneous sites..... 12

Oak Creek near Mojave..... 161
Oso Creek at Crown Valley Parkway, near Mission Viejo..... 246
Organism, definition of..... 5
Other data available..... 18
Owens River, at Keeler Bridge, near Lone Pine... 187
below Tinemaha Reservoir, near Big Pine..... 170

Pacoima Creek near San Fernando..... 389
Palm Canyon Creek near Palm Springs..... 137
Palo Verde Canal near Blythe..... 57
Palo Verde Irrigation District Anderson Drain near Palo Verde..... 64
Palo Verde Irrigation District Olive Lake Drain near Blythe..... 61
Partial-record stations, crest-stage..... 531
definition of..... 7
discharge at..... 531
water-quality, analyses of..... 535
Particle size, definition of..... 7
Particle-size classification, definition of..... 7
Pauma Creek near Pauma Valley..... 224
Percent composition or percent of total, definition of..... 7
Periphyton, definition of..... 7
Perris Valley storm drain at Nuevo Road, near Perris..... 312
Pesticide program..... 10
Pesticides..... 10
Pilot Knob powerplant and wasteway near Pilot Knob..... 93
Pine Creek at division box, near Bishop..... 165
Pine Tree Creek near Mojave..... 162
Pipes Creek near Yucca Valley..... 531
Piru Creek, above Frenchmans Flat..... 439
above Lake Piru..... 441
below Santa Felicia Dam..... 445
below Thorn Meadows, near Stauffer..... 436
Piru, Lake, near Piru..... 444
Plankton, definition of..... 7
Plunge Creek near East Highlands..... 276
Pomerado Creek at Poway Road, near Poway..... 213
Precipitation:
Darwin Creek near Darwin..... 104
Los Penasquitos Creek below Poway Creek, near Poway..... 214
Mission Creek near Desert Hot Springs..... 134
Perris Valley storm drain at Nuevo Road, near Perris..... 312
Pine Tree Creek near Mojave..... 162
Temecula Creek at Vail Dam..... 234
Wildrose Creek near Wildrose Station..... 102
Primary productivity..... 8
Publications, ground water..... 24
surface water..... 17
water quality..... 23
Purisima Creek near Lompoc..... 512

Quail Wash near Joshua Tree..... 531

Radiochemical program..... 10
Radioisotopes..... 11

Page
Records of discharge collected by agencies other than the Geological Survey..... 18
References, selected..... 27
Reservoirs. See lakes and reservoirs.
Return surface flows below Imperial Dam, Ariz.-Calif..... 95
Reyes Creek near Ventucopa..... 519
Rialto pipeline below San Antonio Dam, near Claremont..... 318
Rio Hondo, above Whittier Narrows Dam..... 397
below Whittier Narrows Dam..... 400
near Downey..... 401
near Montebello..... 398
Riverside Water Quality Control Plant at Riverside Narrows, near Arlington..... 303
Rock Creek at Little Round Valley, near Bishop.. 164
Rodeo-San Pasquel Creek near Lompoc..... 532
Rodriguez Reservoir at Rodriguez Dam, Baja California, Mexico..... 198
Runoff map..... 26
Rush Creek, above Grant Lake, near June Lake.... 193
below Agnew Lake, near June Lake..... 192

Salsipuedes Creek (tributary to Santa Ynez River) near Lompoc..... 510
Salt Creek (Death Valley) near Stovepipe Wells..... 105
Salt Creek (Salton Sea basin) near Mecca..... 109
Salt Creek (Santa Ana River basin) at Railroad Canyon Reservoir, near Elsinore..... 314
Salton Sea, flow from Mexico at International Boundary..... 108
inflow to..... 108
near Westmorland..... 108
Salton Sea basin, crest-stage partial-record stations in..... 531
San Antonio Creek (Santa Ana River basin) below San Antonio Dam..... 317
San Antonio Creek (tributary to Pacific Ocean), at Los Alamos..... 516
near Casmalia..... 517
San Antonio Creek (Ventura River basin) at Casitas Springs..... 477
San Bernardino Water Quality Control Plant at San Bernardino..... 286
San Diego Creek, at Lane Road, near Irvine..... 264
near Irvine..... 253
San Diego River near Santee..... 208
San Dimas Creek below San Dimas Dam..... 378
San Felipe Creek, near Julian..... 125
near Westmorland..... 129
San Gabriel River, above Whittier Narrows Dam... 380
at Azusa powerhouse, at Azusa..... 374
at Pico..... 382
at Spring Street, near Los Alamitos..... 383
at Whittier Narrows..... 381
below Santa Fe Dam, near Baldwin Park..... 377
East Fork, near Camp Bonita..... 372
West Fork, at Camp Rincon..... 373
San Gabriel River basin, schematic diagram of... 371
San Gorgonio River near White Water..... 132
San Jacinto River, at Railroad Canyon weir, near Elsinore..... 313
near Elsinore..... 315
near San Jacinto..... 309
San Jose Creek (tributary to Pacific Ocean), at Goleta..... 495
near Goleta..... 494
San Jose Creek (tributary to San Gabriel River) near El Monte..... 379
San Juan Creek at San Juan Capistrano..... 241
San Luis Rey River, at Monserate Narrows, near Pala..... 226
at Oceanside..... 229
near Bonsall..... 228
West Fork, near Warner Springs..... 223
San Timoteo Creek, near Loma Linda..... 282
near Redlands..... 281
San Vicente Reservoir near Lakeside..... 207
San Ysidro Creek at Montecito..... 532
San Ysidro Creek basin, crest-stage partial-record stations in..... 532
Santa Ana Creek near Oak View..... 479
Santa Ana River, at E Street, near San Bernardino..... 290
at Adams Avenue, near Costa Mesa..... 366
at Imperial Highway, near Anaheim..... 344

Page
Santa Ana River, at Mission Boulevard, at Riverside..... 299
at MWD Crossing, near Arlington..... 300
at Prado Park, near Corona..... 307
at Santa Ana..... 361
below Prado Dam..... 323
near Katella Avenue, at Orange..... 354
near Mentone..... 271
Santa Ana River basin, discharge measurements at miscellaneous sites..... 533
schematic diagram of..... 369
Santa Ana River spreading diversion, below Imperial Highway, near Anaheim..... 350
near Mentone..... 273
Santa Clara River, above railroad station, near Lang..... 424
at Los Angeles-Ventura County line..... 427
at Montalvo..... 467
near Santa Clara River, near Santa Paula..... 537
Santa Cruz Creek near Santa Ynez..... 502
Santa Margarita River, at Ysidora..... 239
near Fallbrook..... 237
near Temecula..... 236
Santa Maria Creek near Ramona..... 219
Santa Maria River at Guadalupe..... 530
Santa Monica Creek at Carpinteria..... 531
Santa Monica Creek basin, crest-stage partial-record stations in..... 531
Santa Paula Creek near Santa Paula..... 460
Santa Ynez River, above Gibraltar Dam, near Santa Barbara..... 499
at Cooper's Reef, near Lompoc..... 509
at Jameson Lake, near Montecito..... 498
at narrows, near Lompoc..... 511
at Pine Canyon, near Lompoc..... 515
at Solvang..... 507
at 13th Street, near Lompoc..... 513
below Gibraltar Dam, near Santa Barbara..... 500
below Los Laureles Canyon, near Santa Ynez.... 501
near Santa Ynez..... 504
Santa Ynez River basin, crest-stage partial-record stations in..... 532
Santa Ysabel Creek, near Ramona..... 216
near San Pasqual..... 217
Santiago Creek, at Modjeska..... 359
at Santa Ana.....356,536
Saticoy diversion near Saticoy..... 464
Sediment, collection and examination of..... 22
definition of..... 8
Selected references..... 27
Sespe Creek, near Fillmore..... 452
near Wheeler Springs..... 449
Seston, definition of..... 8
Silver Canyon Creek near Laws..... 166
Sisquoc River, near Garey..... 527
near Sisquoc..... 525
Snow Creek near White Water..... 133
Sodium-adsorption-ratio, definition of..... 8
Solute, definition of..... 9
Solutes, collection and examination of..... 21
Special networks and programs..... 10
Specific conductance, definition of..... 9
Stage-discharge relation, definition of..... 9
Substrate, definition of..... 9
Sweetwater Reservoir near National City..... 205
Sweetwater River near Descanso..... 204
Sycamore Creek at Santa Barbara..... 532
Sycamore Creek basin, crest-stage partial-record stations in..... 532

Tahquitz Creek near Palm Springs..... 136
Taxonomy, definition of..... 9
Temecula Creek, at Vail Dam..... 234
near Aguanga..... 233
Temescal Creek near Corona..... 316
Temperature, collection and examination of..... 22
Tepusquet Creek near Sisquoc..... 526
Thermograph, definition of..... 9
Thumbelina Creek at Buellton..... 532
Tijuana River, near Dulzura..... 197
near Nestor..... 199
Time-weighted average, definition of..... 9
Tons per acre-foot, definition of..... 9
Tons per day, definition of..... 9
Topanga Creek near Topanga Beach..... 415
Total, definition of..... 9
Tritium network..... 11

Page
Tujunga Creek below Hansen Dam..... 391
Turbidity, collection of..... 23
definition of..... 9

Vail Lake, contents of..... 234
Vallecito Creek near Julian..... 128
Ventura River, near Meiners Oaks..... 476
near Ventura..... 481
Victoria Street drain at outlet, at Santa Barbara..... 490

Wagon Road Creek near Stauffer..... 518
Warm Creek, floodway at San Bernardino..... 285
near San Bernardino..... 291
Wasteway No. 1 near Mecca..... 142
Waterman Canyon Creek near Arrowhead Springs.... 284
Weight-percent-organic-matter, definition of..... 10
Weighted average, definition of..... 9
Whitewater River, at Indio..... 140
at White Water..... 130
near Mecca..... 141
Wildrose Creek near Wildrose Station..... 102
Wohlford, Lake, near Escondido..... 221
WRD, definition of..... 10
WSP, definition of..... 10

Zaca Creek near Buellton..... 508

U.S. DEPARTMENT OF THE INTERIOR
Geological Survey
855 Oak Grove Avenue
Menlo Park CA 94025

OFFICIAL BUSINESS
PENALTY FOR PRIVATE USE $300

POSTAGE AND FEES PAID
U.S. DEPARTMENT OF THE INTERIOR
INT 413

U.S.MAIL